FENOC™
FirstEnergy Nuclear Operating Company

Beaver Valley Power Station
P.O. Box 4
Shippingport, PA 15077

Eric A. Larson
Site Vice President

724-682-5234
Fax: 724-643-8069

July 30, 2013
L-13-223

10 CFR 50.90

ATTN: Document Control Desk
U. S. Nuclear Regulatory Commission
Washington, DC 20555-0001

SUBJECT:
Beaver Valley Power Station, Unit No. 1
Docket Number 50-334, License Number DPR-66
License Amendment Request to Implement 10 CFR 50.61a, "Alternate Fracture Toughness Requirements for Protection Against Pressurized Thermal Shock Events"

Pursuant to 10 CFR 50.61a(c) and 10 CFR 50.90, FirstEnergy Nuclear Operating Company (FENOC) hereby submits an amendment application for the Beaver Valley Power Station, Unit No. 1 operating license. The proposed amendment would authorize the implementation of 10 CFR 50.61a, "Alternate fracture toughness requirements for protection against pressurized thermal shock events," in lieu of 10 CFR 50.61, "Fracture toughness requirements for protection against pressurized thermal shock events."

An evaluation of the proposed change is enclosed. To allow for normal NRC processing, FENOC requests approval of the proposed license amendment by July 31, 2014. Also, an implementation period of 120 days following the effective date of the amendment is requested.

There are no regulatory commitments contained in this submittal. If there are any questions or if additional information is required, please contact Mr. Thomas A. Lentz, Manager - Fleet Licensing, at (330) 315-6810.

I declare under penalty of perjury that the foregoing is true and correct. Executed on July 30, 2013.

Sincerely,

Eric A. Larson

Enclosure:
FENOC Evaluation of the Proposed Amendment

cc: Director, Office of Nuclear Reactor Regulation (NRR)
NRC Region I Administrator
NRC Resident Inspector
NRC Project Manager
Director BRP/DEP
Site BRP/DEP Representative

FENOC Evaluation of the Proposed Amendment

Subject: License Amendment Request for Approval to Implement 10 CFR 50.61a, "Alternate Fracture Toughness Requirements for Protection Against Pressurized Thermal Shock Events"

Table of Contents

Attachments:

1. Proposed Facility Operating License Change (Mark-Up)
2. Proposed Facility Operating License Change (Re-Typed)

1.0 SUMMARY DESCRIPTION

This evaluation supports a request to amend the Beaver Valley Power Station, Unit No. 1 (BVPS-1) Operating License No. DPR-66. The proposed amendment would authorize implementation of 10 CFR 50.61a, "Alternate fracture toughness requirements for protection against pressurized thermal shock [PTS] events," (alternate PTS rule). Proposed text for a new license condition to be added to the existing Facility Operating License (FOL) is included in this license amendment request.

BVPS-1 currently complies with 10 CFR 50.61, "Fracture toughness requirements for protection against pressurized thermal shock events," which establishes screening criteria below which the potential for a reactor vessel to fail due to a PTS event is deemed to be acceptably low. The 10 CFR 50.61 screening criteria define a limiting level of embrittlement beyond which plant operation cannot continue without further evaluation. As described in NUREG-1806, "Technical Basis for Revision of the Pressurized Thermal Shock (PTS) Screening Limit in the PTS Rule (10 CFR 50.61)," (Reference 14) the screening criteria in the PTS rule is overly conservative and the risk of through wall cracking due to a PTS event is much lower than previously estimated. As such, the specified screening limits and associated compensatory actions may impose an unnecessary burden on licensees whose pressurized water reactor (PWR) vessel is projected to exceed the PTS rule screening criteria.

The alternate PTS rule, which was included in the Federal Register with an effective date of February 3, 2010, provides fracture toughness requirements for protection against PTS events for PWR pressure vessels that are less burdensome than the requirements of the PTS rule.

BVPS-1 is expected to exceed the screening criteria of the PTS rule prior to its extended license expiration (2036). Compliance with the alternate PTS rule as an alternative to the requirements of the PTS rule would support the BVPS-1 license extension and reduce regulatory burden while maintaining adequate protection to public health and safety.

2.0 DETAILED DESCRIPTION

FENOC proposes to implement the requirements of the alternate PTS rule in lieu of the current requirements of the PTS rule and to add a new license condition. Proposed text for a new license condition to be added to the existing FOL, Appendix C, "Additional Conditions Operating License No. DPR-66," that authorizes the implementation of the alternate PTS rule is included in the attachments.

During plant operation, the walls of reactor pressure vessels (RPVs) are exposed to neutron radiation, resulting in localized embrittlement of the vessel steel and weld materials in the core area. If an embrittled RPV had a flaw of critical size and certain severe system transients were to occur, the flaw could propagate through the vessel,

resulting in a through-wall crack. The severe transients of concern are known as pressurized thermal shock events. PTS events in PWRs are caused by severe overcooling (thermal shock) concurrent with or followed by significant pressure in the reactor vessel.

As summarized in NUREG-1806, "Technical Basis for Revision of the Pressurized Thermal Shock (PTS) Screening Limit in the PTS Rule (10 CFR 50.61)," in the early 1980s, the nuclear industry and the Nuclear Regulatory Commission (NRC) staff performed a number of investigations to assess the risk of vessel failure posed by PTS and to establish the operational limits needed to ensure that the likelihood of RPV failures caused by PTS transients is maintained at an acceptably low level. These efforts led to the development of the PTS rule. The nil ductility (fracture toughness) transition reference temperature (RT_{NDT}) of the reactor vessel material increases as a result of irradiation throughout the operational life of the vessel. The PTS rule establishes screening criteria (or maximum values of RT_{NDT} permitted during the operating life of the plant) of 270 degrees Fahrenheit (°F) for axial welds, plates, and forgings, and 300 °F for circumferential welds. The reference temperature value RT_{NDT} evaluated for the end-of-life (EOL) fluence for each of the vessel beltline materials, using the procedures in paragraph (c) of the PTS rule, is referred to as (RT_{PTS}).

The PTS rule requires licensees to take compensatory actions when the value of RT_{PTS} for any material in the beltline is projected to exceed the PTS screening criterion using the plant's projected EOL fluence. It requires the licensee to implement flux reduction programs that are reasonably practical to avoid exceeding the PTS screening criteria. If a licensee has no reasonably practical flux reduction program that will prevent RT_{PTS} from exceeding the PTS screening criteria using the EOL fluence, the licensee is required to submit a safety analysis to determine what, if any, modifications to equipment, systems, and operation are necessary to prevent potential failure of the reactor vessel as a result of the postulated PTS events if continued operation beyond the screening criteria is allowed. Reactor vessel annealing may also be implemented by a licensee to prevent exceeding the screening criteria.

During the Beaver Valley Power Station license renewal process, FENOC confirmed by letter dated April 2, 2008 that BVPS-1 was expected to exceed the 270°F screening limit of the PTS rule prior to the EOL extension. As a result, FENOC committed that prior to exceeding the PTS screening criteria for BVPS-1, a flux reduction measure to manage PTS in accordance with the requirements of the PTS rule would be selected and submitted to the NRC for review and approval. This commitment is contained in the BVPS-1 Updated Final Safety Analysis Report Table 16-1, "Unit 1 License Renewal Commitments," as well as in Appendix A of the NRC, "Safety Evaluation Report Related to the License Renewal of Beaver Valley Power Station, Units 1 and 2 (NUREG-1929)," dated October 2009.

Advancements in understanding and knowledge of materials behavior, ability to realistically model plant systems and operational characteristics, and to better evaluate

PTS transients to estimate loads on vessel walls have shown that earlier analyses, performed some 20 years ago as part of the development of the PTS rule and screening criteria, were overly conservative.

In 1999, the NRC undertook a project to develop a technical basis to support a risk-informed revision of the existing PTS rule. Realistic input values and models and an explicit treatment of uncertainties were used to develop the alternate PTS rule, which was approved by the NRC and included in the Federal Register with an effective date of February 3, 2010. In order to implement the alternate PTS rule, a licensee must submit a request for approval in the form of an application for a license amendment request in accordance with 10 CFR 50.90 and include documentation required by alternate PTS rule paragraphs (c)(1), (2), and (3).

The BVPS-1 PTS EOL extension analysis is documented in Westinghouse Report WCAP-15571 Supplement 1, Revision 2, "Analysis of Capsule Y from Beaver Valley Unit 1 Reactor Vessel Radiation Surveillance Program," dated September 2011 (Reference 5). The projected RT_{PTS} values for EOL extension at BVPS-1 meet the PTS rule screening criteria for beltline and extended beltline materials with the exception of lower shell plate B6903-1 (heat C6317-1). Plate B6903-1 has a 50 effective full power year (EFPY) RT_{PTS} value of 277 °F, which exceeds the PTS rule screening criteria of 270 °F. Based on the fluence information provided in WCAP-15571 Supplement 1, Revision 2, the PTS rule screening limit is expected to be reached at 39.6 EFPY.

Paragraph (a) of the alternate PTS rule defines the reference temperature RT_{MAX-X}. The reference temperature RT_{MAX-X} means any or all of the reactor vessel material properties that characterize the resistance to fracture initiation from flaws found along axial weld fusion lines (RT_{MAX-AW}), in plates (in regions not associated with welds) (RT_{MAX-PL}), in forgings (in regions not associated with welds) (RT_{MAX-FO}), along circumferential weld fusion lines (RT_{MAX-CW}), or the sum of RT_{MAX-AW} and RT_{MAX-PL}.

This license amendment request documents the basis for implementing the requirements of the alternate PTS rule up to the end of the 60-year operating license. The evaluation concludes the following:

1) The BVPS-1 reactor vessel beltline materials have end-of-license (EOL, 50 EFPY) RT_{MAX-X} values below the alternate PTS rule screening criteria.

2) The surveillance data for the vessel base metal did not pass the surveillance data statistical tests. However, as permitted by the alternate PTS rule, an adjustment was made to the calculation of the RT_{MAX-X} values for this material and incorporated into the analysis. The adjustment did not change the limiting RT_{MAX-X} values. The adjustment is discussed further in Section 3.7.2.

3) The criteria for reactor vessel beltline weld flaw density and size distribution did not require evaluation based on the latest BVPS-1 inspection results. This is acceptable per the alternate PTS rule criteria. Analysis of inspection results are discussed further in Section 3.7.3.

FENOC's implementation of the alternate PTS rule in lieu of the PTS rule would provide new screening criteria for PTS, resulting in a burden reduction while continuing to provide adequate protection to public health and safety.

3.0 TECHNICAL EVALUATION

This section documents evaluations performed for the BVPS-1 reactor vessel to meet the requirements of the alternate PTS rule. Section 3.1 discusses the alternate PTS rule and its requirements. Section 3.2 provides the methodology for calculating RT_{MAX-X} and performing the examination and flaw assessment required by the alternate PTS rule. Sections 3.3 through 3.6 provide inputs necessary to conduct the alternate PTS rule evaluations described in Section 3.2. Specifically, these sections provide the material properties, neutron fluence values, surveillance capsule analysis results, and inservice inspection data of the reactor vessel beltline materials. The results of the RT_{MAX-X} calculations and flaw assessment are presented in Section 3.7. An evaluation of extended beltline materials is provided in Section 3.8. The conclusion and references for the PTS evaluation follow in Sections 3.9 and 6.0, respectively.

3.1 Alternate Pressurized Thermal Shock Rule

The alternate PTS rule primary requirements consist of the following:

- Each licensee shall have projected values of RT_{MAX-X} for each reactor vessel beltline material for the EOL fluence of the material. The assessment of RT_{MAX-X} values must use the calculation procedures described in Section 3.2.1 of this evaluation that are equivalent expressions of those calculations prescribed by the alternate PTS rule. The assessment must specify the bases for the projected value of RT_{MAX-X} for each reactor vessel beltline material, including the assumptions regarding future plant operation (for example, core loading patterns, projected capacity factors); the copper (Cu), phosphorus (P), manganese (Mn), and nickel (Ni) contents; the reactor cold leg temperature (T_C); and the neutron flux and fluence values used in the calculation for each beltline material.

- Each licensee shall evaluate the results from a plant-specific or integrated surveillance program if the surveillance data satisfy the criteria described in 10 CFR 50.61a (f)(6)(i)(A) and (f)(6)(i)(B).

- Each licensee shall perform an examination and an assessment of flaws in the reactor vessel beltline as described in Section 3.2.3 of this evaluation. The licensee shall verify that the requirements described in Section 3.2.3 have been met.

- Each licensee shall compare the projected RT_{MAX-X} values for plates, forgings, axial welds, and circumferential welds to the PTS screening criteria in Table 3.2-2 of this evaluation, for the purpose of evaluating a reactor vessel's susceptibility to fracture due to a PTS event.

- If any of the projected RT_{MAX-X} values are greater than the PTS screening criteria in Table 3.2-2, then the licensee may propose the compensatory actions or plant-specific analyses as required in the alternate PTS rule paragraphs (d)(3) through (d)(7), as applicable, to justify operation beyond the PTS screening criteria in Table 3.2-2. The licensee shall implement those flux reduction programs that are reasonably practicable to avoid exceeding the PTS screening criteria. If this analysis indicates that no reasonably practicable flux reduction program will prevent the RT_{MAX-X} value for one or more of the reactor vessel beltline materials from exceeding the PTS screening criteria, then the licensee shall perform a safety analysis to determine what, if any, modifications to equipment, systems, and operation are necessary to prevent the potential for an unacceptably high probability of failure of the reactor vessel as a result of postulated PTS events. In the analysis, the licensee may determine the properties of the reactor vessel materials based on available information, research results and plant surveillance data, and may use probabilistic fracture mechanics techniques.

Two alternate PTS rule subsequent requirements consist of the following:

- Whenever there is a significant change in projected values of RT_{MAX-X}, so that the previous value, the current value, or both values, exceed the screening criteria before the expiration of the plant operating license; or upon the licensee's request for a change in the expiration date for operation of the facility; a re-assessment of RT_{MAX-X} values must be conducted. If the surveillance data used to perform the re-assessment of RT_{MAX-X} values meet the requirements discussed in alternate PTS rule paragraphs (f)(6)(v) or (f)(6)(vi), the data must be analyzed in accordance with the alternate PTS rule and the RT_{MAX-X} values must be recalculated and resubmitted for approval.

- The licensee shall verify that the requirements of alternate PTS rule paragraphs (e), (e)(1), (e)(2), and (e)(3) have been met. The licensee must submit, within 120 days after completing a volumetric examination of reactor vessel beltline materials as required by American Society of Mechanical Engineers Boiler and Pressure Vessel Code (ASME Code), Section XI, the adjustments made to the volumetric test data to account for NDE-related uncertainties as described in paragraph (e)(1) and all information required by paragraph (e)(1)(iii) for review and approval. If a licensee is required to implement paragraphs (e)(4), (e)(5), and (e)(6) of the alternate PTS rule, the information required in these paragraphs must be submitted within one year after completing a volumetric examination of reactor vessel materials as required by ASME Code, Section XI.

3.2 Method Discussion

This section describes the methodology for calculating RT_{MAX-X} and is derived from the alternate PTS rule requirements.

3.2.1 Calculation of RT_{MAX-X} Values

In accordance with paragraph (f) of the alternate PTS rule, each licensee shall calculate RT_{MAX-X} values for each reactor vessel beltline material using the fast neutron fluence (φt). The values of RT_{MAX-AW}, RT_{MAX-PL}, RT_{MAX-FO}, and RT_{MAX-CW} must be determined using equations 1 through 4 (Reference 1). Reference 2 provides additional information on these equations, which is included below. RT_{MAX-X} values are calculated in °F as follows:

$$RT_{MAX-AW} \equiv \underset{i=1}{\overset{n_{AWFL}}{\mathrm{MAX}}}\left[\mathrm{MAX}_{AWFL(i)}\left\{\begin{matrix}\left(RT_{NDT(u)}^{adj-aw(i)} + \Delta T_{30}^{adj-aw(i)}\left(\phi t_{FL}\right)\right), \\ \left(RT_{NDT(u)}^{adj-pl(i)} + \Delta T_{30}^{adj-pl(i)}\left(\phi t_{FL}\right)\right)\end{matrix}\right\}\right] \quad (1)$$

Where:

n_{AWFL} is the number of axial weld fusion lines in the beltline region of the vessel,

i is a counter that ranges from 1 to n_{AWFL},

ϕt_{FL} is the maximum fluence occurring on the vessel ID along a particular axial weld fusion line,

$RT_{NDT(u)}^{adj-aw(i)}$ is the unirradiated RT_{NDT} of the weld adjacent to the ith axial weld fusion line,

$RT_{NDT(u)}^{adj-pl(i)}$ is the unirradiated RT_{NDT} of the plate adjacent to the ith axial weld fusion line,

$\Delta T_{30}^{adj-aw(i)}$ is the shift in the Charpy V-Notch 30-foot-pound energy produced by irradiation to ϕt_{FL} of the weld adjacent to the ith axial weld fusion line, and

$\Delta T_{30}^{adj-pl(i)}$ is the shift in the Charpy V-Notch 30-foot-pound energy produced by irradiation due to ϕt_{FL} of the plate adjacent to the ith axial weld fusion line.

$$RT_{MAX\text{-}PL} \equiv \underset{i=1}{\overset{n_{PL}}{MAX}}\left[RT_{NDT(u)}^{PL(i)} + \Delta T_{30}^{PL(i)}\left(\phi t_{MAX}^{PL(i)}\right)\right] \quad (2)$$

Where:

n_{PL} is the number of plates in the beltline region of the vessel,

i is a counter that ranges from 1 to n_{PL},

$\phi t_{MAX}^{PL(i)}$ is the maximum fluence occurring over the vessel ID occupied by a particular plate,

$RT_{NDT(u)}^{PL(i)}$ is the unirradiated RT_{NDT} of a particular plate, and

$\Delta T_{30}^{PL(i)}$ is the shift in the Charpy V-Notch 30-foot-pound energy produced by irradiation to $\phi t_{MAX}^{PL(i)}$ of a particular plate.

$$RT_{MAX\text{-}FO} \equiv \underset{i=1}{\overset{n_{FO}}{MAX}}\left[RT_{NDT(u)}^{FO(i)} + \Delta T_{30}^{FO(i)}\left(\phi t_{MAX}^{FO(i)}\right)\right] \quad (3)$$

Where:

n_{FO} is the number of forgings in the beltline region of the vessel,

i is a counter that ranges from 1 to n_{FO},

$\phi t_{MAX}^{FO(i)}$ is the maximum fluence occurring over the vessel ID occupied by a particular forging,

$RT_{NDT(u)}^{FO(i)}$ is the unirradiated RT_{NDT} of a particular forging, and

$\Delta T_{30}^{FO(i)}$ is the shift in the Charpy V-Notch 30-foot-pound energy produced by irradiation to $\phi t_{MAX}^{FO(i)}$ of a particular forging.

$$RT_{MAX\text{-}CW} \equiv \underset{i=1}{\overset{n_{CWFL}}{\mathrm{MAX}}}\left[\mathrm{MAX}_{CWFL(i)}\left\{\begin{array}{l}\left(RT_{NDT(u)}^{adj-cw(i)} + \Delta T_{30}^{adj-cw(i)}\left(\phi t_{FL}\right)\right),\\ \left(RT_{NDT(u)}^{adj-pl(i)} + \Delta T_{30}^{adj-pl(i)}\left(\phi t_{FL}\right)\right),\\ \left(RT_{NDT(u)}^{adj-fo(i)} + \Delta T_{30}^{adj-fo(i)}\left(\phi t_{FL}\right)\right)\end{array}\right\}\right] \quad (4)$$

Where:

n_{CWFL} is the number of circumferential weld fusion lines in the beltline region of the vessel,

i is a counter that ranges from 1 to n_{CWFL},

ϕt_{FL} is the maximum fluence occurring on the vessel ID along a particular circumferential weld fusion line,

$RT_{NDT(u)}^{adj-cw(i)}$ is the unirradiated RT_{NDT} of the weld adjacent to the ith circumferential weld fusion line,

$RT_{NDT(u)}^{adj-pl(i)}$ is the unirradiated RT_{NDT} of the plate adjacent to the ith circumferential weld fusion line (if there is no adjacent plate this term is ignored),

$RT_{NDT(u)}^{adj-fo(i)}$ is the unirradiated RT_{NDT} of the forging adjacent to the ith circumferential weld fusion line (if there is no adjacent forging this term is ignored),

$\Delta T_{30}^{adj-cw(i)}$ is the shift in the Charpy V-Notch 30-foot-pound energy produced by irradiation to ϕt_{FL} of the weld adjacent to the ith circumferential weld fusion line,

$\Delta T_{30}^{adj-pl(i)}$ is the shift in the Charpy V-Notch 30-foot-pound energy produced by irradiation to ϕt_{FL} of the plate adjacent to the ith axial weld fusion line (if there is no adjacent plate this term is ignored), and

$\Delta T_{30}^{adj-fo(i)}$ is the shift in the Charpy V-Notch 30-foot-pound energy produced by irradiation to ϕt_{FL} of the forging adjacent to the ith axial weld fusion line (if there is no adjacent forging this term is ignored).

The values of ΔT_{30} must be determined using Equations 5, 6 and 7, for each axial weld, plate, forging, and circumferential weld. The ΔT_{30} value for each axial weld calculated as specified by Equation 1 must be calculated for the maximum fluence (φt_{FL}) occurring along a particular axial weld at the clad-to-base metal interface. The ΔT_{30} value for each adjacent plate calculated as specified by Equation 1 must also be calculated using

the same value of φt_{FL} used for the axial weld. The ΔT_{30} value for each plate or forging calculated as specified by Equations 2 and 3 must be calculated for the maximum fluence (φt_{MAX}) occurring at the clad-to-base metal interface over the entire area of each plate or forging. In Equation 4, the fluence (φt_{FL}) value used for calculating the circumferential weld ΔT_{30} value is the maximum fluence occurring along the circumferential weld at the clad-to-base metal interface. The ΔT_{30} values in Equation 4 shall also be calculated for the adjoining plates or forgings using the same maximum circumferential weld fluence. If the conditions specified in alternate PTS rule paragraph (f)(6)(v) are not met, licensees must propose ΔT_{30} and RT_{MAX-X} values in accordance with paragraph (f)(6)(vi) of the alternate PTS rule.

The equation used to calculate the ΔT_{30} shift is displayed below:

$$\Delta T_{30} = MD + CRP \qquad (5)$$

Where:

$MD=$	$A(1-0.001718T_C)(1+6.13PMn^{2.471})\ \varphi t_e^{0.5}$	(6)
$CRP=$	$B(1+3.77Ni^{1.191})\ f(Cu_e,P)g(Cu_e,Ni,\ \varphi t_e)$	(7)
$A=$	1.140×10^{-7} for forgings 1.561×10^{-7} for plates 1.417×10^{-7} for welds	
$B=$	102.3 for forgings 102.5 for plates in non-CE manufactured vessels 135.2 for plates in CE manufactured vessels 155.0 for welds	
$\varphi t_e=$	φt for $\varphi \geq 4.39\times10^{10}$ n/cm^2/sec $\varphi t(4.39\times10^{10}/\ \varphi)^{0.2595}$ for $\varphi < 4.39 \times 10^{10}$ n/cm^2/sec	
$f(Cu_e,P)=$	0 for $Cu \leq 0.072$ $[Cu_e - 0.072]^{0.668}$ for $Cu > 0.072$ and $P \leq 0.008$ $[Cu_e - 0.072+1.359(P-0.008)]^{0.668}$ for $Cu > 0.072$ and $P > 0.008$	
$Cu_e=$	0 for $Cu \leq 0.072$ MIN (Cu, Maximum Cu_e) for $Cu > 0.072$	
Max. $Cu_e=$	0.243 for Linde 80 welds 0.301 for all other materials	
$g(Cu_e,Ni,\ \varphi t_e)=$	$\frac{1}{2}+\frac{1}{2}\tanh\left[\frac{\log_{10}(\varphi t_e)+1.1390Cu_e-0.448Ni-18.120}{0.629}\right]$	
$T_C =$	Cold leg temperature under normal full power operating conditions (°F) as a time weighted average	
$\varphi =$	Average neutron flux (n/cm^2/sec)	

t	Time that the reactor has been in full power operation (sec)
φt	Neutron fluence (n/cm^2)
P=	Phosphorous content (weight percent [wt%])
Ni=	Nickel content (wt%)
Cu=	Copper content (wt%)
Mn=	Manganese content (wt%)

The values of Cu, Mn, P, and Ni in Equations 6 and 7 must represent the best estimate values for the material. For a plate or forging, the best estimate value is normally the mean of the measured values for that plate or forging. For a weld, the best estimate value is normally the mean of the measured values for a weld deposit made using the same weld wire heat number as the critical vessel weld. If these values are not available, either the upper limiting values given in the material specifications to which the vessel material was fabricated, or conservative estimates (that is, mean plus one standard deviation) based on generic data as shown in Table 3.2-1 for P and Mn, must be used.

Table 3.2-1 Conservative Estimates for Chemical Element Weight Percentages

Materials	P	Mn
Plates	0.014	1.45
Forgings	0.016	1.11
Welds	0.019	1.63

The values of $RT_{NDT(U)}$ must be evaluated according to the procedures in the ASME Code, Section III, paragraph NB–2331. If any other method is used for this evaluation, the licensee shall submit the proposed method for review and approval by the Director of the Office of Nuclear Reactor Regulation along with the calculation of RT_{MAX-X} values.

- If a measured value of $RT_{NDT(U)}$ is not available, a generic mean value of $RT_{NDT(U)}$ for the class of material must be used if there are sufficient test results to establish a mean.
- The following generic mean values of $RT_{NDT(U)}$ must be used unless justification for different values is provided: 0 °F for welds made with Linde 80 weld flux; and –56 °F for welds made with Linde 0091, 1092, and 124 and ARCOS B–5 weld fluxes.

The value of T_C in Equation 6 of this section must represent the time-weighted average of the reactor cold leg temperature under normal operating full power conditions from

the beginning of full power operation through the end of licensed operation. For the surveillance capsule statistical tests, T_C is a time-weighted average from the beginning of full power operation up to the time of capsule withdrawal.

If any of the calculated RT_{MAX-X} values for BVPS-1 are greater than the PTS screening criteria, defined in Table 3.2-2, further evaluation or action, consistent with paragraphs (d)(3) through (d)(7) of the alternate PTS rule, is required.

Table 3.2-2 PTS Screening Criteria

Product form and RT_{MAX-X} values	RT_{MAX-X} limits [°F] for different vessel wall thicknesses[1] (T_{WALL})		
	$T_{WALL} \leq 9.5$ in.	9.5 in. < T_{WALL} ≤ 10.5 in.	10.5 in. < T_{WALL} ≤ 11.5 in.
Axial Weld—RT_{MAX-AW}	269	230	222
Plate—RT_{MAX-PL}	356	305	293
Forging without underclad cracks—RT_{MAX-FO}[2]	356	305	293
Axial Weld and Plate—$RT_{MAX-AW} + RT_{MAX-PL}$	538	476	445
Circumferential Weld—RT_{MAX-CW}[3]	312	277	269
Forging with underclad cracks—RT_{MAX-FO}[4]	246	241	239

Note:
1. Wall thickness is the beltline wall thickness including the clad thickness in inches (in.).
2. Forgings without underclad cracks apply to forgings for which no underclad cracks have been detected and that were fabricated in accordance with Regulatory Guide 1.43.
3. RT_{PTS} limits contribute 1×10^{-8} per reactor year to the reactor vessel TWCF.
4. Forgings with underclad cracks apply to forgings that have detected underclad cracking or were not fabricated in accordance with Regulatory Guide 1.43.

3.2.2 Surveillance Capsule Data Statistical Checks

As a condition of the alternate PTS rule, the licensee must consider plant-specific information that could affect the use of this equation for the determination of a material's ΔT_{30} value. In order to make this determination, the alternate PTS rule provides requirements for evaluation of surveillance capsule data in paragraphs (f)(6)(i), (f)(6)(ii), (f)(6)(iii), and (f)(6)(iv). The requirements consist of a mean deviation test, a slope deviation test, and an outlier deviation test.

Specifically, the alternate PTS rule states that the licensee shall verify that an appropriate RT_{MAX-X} value has been calculated for each reactor vessel beltline material by considering plant-specific information that could affect the use of the model (that is, Equations 5, 6 and 7) for the determination of a material's ΔT_{30} value.

The licensee shall evaluate the results from a plant-specific or integrated surveillance program if the surveillance data satisfy the following criteria

- The surveillance material must be a heat-specific match for one or more of the materials for which RT_{MAX-X} is being calculated. The 30-foot-pound transition temperature must be determined as specified by the requirements of 10 CFR 50, Appendix H.
- If three or more surveillance data points measured at three or more different neutron fluences exist for a specific material, the licensee shall determine if the surveillance data show a significantly different trend than the embrittlement model predicts. If fewer than three surveillance data points exist for a specific material, then the embrittlement model must be used without performing the consistency check.

The licensee shall estimate the mean deviation from the embrittlement model for the specific data set (that is, a group of surveillance data points representative of a given material). The mean deviation from the embrittlement model for a given data set must be calculated using Equations 8 and 9. The mean deviation for the data set must be compared to the maximum heat-average residual given in Table 3.2-3 or derived using Equation 10. The maximum heat-average residual is based on the material group into which the surveillance material falls and the number of surveillance data points. For surveillance data sets with greater than 8 data points, the maximum credible heat-average residual must be calculated using Equation 10. The value of σ used in Equation 10 must be obtained from Table 3.2-3.

$$\textit{Residual (r)} = \textit{Measured } \Delta T_{30} - \textit{Predicted } \Delta T_{30} \quad (8)$$

$$\textit{Mean deviation for a data set of n data points} = (1/n) \times \sum_{i=1}^{n} r_i \quad (9)$$

$$\textit{Maximum credible heat average residual} = 2.33\sigma/n^{0.5} \quad (10)$$

Where:

n = number of surveillance data points (sample size) in the specific data set

σ = standard deviation of the residuals about the model for a relevant material group given in Table 3.2-3.

Table 3.2-3 Maximum Heat-Average Residual [°F] for Relevant Material Groups by Number of Available Data Points (Significance Level = 1%)

Material group	σ [°F]	Number of available data points					
		3	4	5	6	7	8
Welds, for Cu > 0.072	26.4	35.5	30.8	27.5	25.1	23.2	21.7
Plates, for Cu > 0.072	21.2	28.5	24.7	22.1	20.2	18.7	17.5
Forgings, for Cu > 0.072	19.6	26.4	22.8	20.4	18.6	17.3	16.1
Weld, Plate or Forging, for Cu ≤ 0.072	18.6	25.0	21.7	19.4	17.7	16.4	15.3

The licensee shall estimate the slope of the embrittlement model residuals (estimated using Equation 8) plotted as a function of the base 10 logarithm of neutron fluence for the specific data set. The licensee shall estimate the T-statistic for this slope (T_{SURV}) using Equation 11 and compare this value to the maximum permissible T-statistic (T_{MAX}) in Table 3.2-4. For surveillance data sets with greater than 15 data points, the T_{MAX} value must be calculated using Student's T distribution with a significance level (α) of 1 percent for a one-tailed test.

$$T_{SURV} = \frac{m}{(se(m))} \tag{11}$$

Where:

m = the slope of a plot of all of the *r* values (estimated using Equation 8) versus the base 10 logarithm of the neutron fluence for each *r* value. The slope shall be estimated using the method of least squares.

se(m) = the least-squares estimate of the standard-error associated with the estimated slope value *m*.

Table 3.2-4 T_{MAX} Values for the Slope Deviation Test (Significance Level = 1%)

Number of available data points (n)	T_{MAX}
3	31.82
4	6.96
5	4.54
6	3.75
7	3.36
8	3.14
9	3.00
10	2.90
11	2.82

Table 3.2-4 T_{MAX} Values for the Slope Deviation Test (Significance Level = 1%)	
Number of available data points (n)	T_{MAX}
12	2.76
13	2.72
14	2.68
15	2.65

The licensee shall estimate the two largest positive deviations (outliers) from the embrittlement model for the specific data set using Equations 8 and 12. The licensee shall compare the largest normalized residual (r *) to the appropriate allowable value from the third column in Table 3.2-5 and the second largest normalized residual to the appropriate allowable value from the second column in Table 3.2-5.

$$r^* = \frac{r}{\sigma} \tag{12}$$

Where r is defined using Equation 8 and σ is given in Table 3.2-3.

Table 3.2-5 Threshold Values for the Outlier Deviation Test (Significance Level = 1%)		
Number of available data points (n)	Second largest allowable normalized residual value (r*)	Largest allowable normalized residual value (r*)
3	1.55	2.71
4	1.73	2.81
5	1.84	2.88
6	1.93	2.93
7	2.00	2.98
8	2.05	3.02
9	2.11	3.06
10	2.16	3.09
11	2.19	3.12
12	2.23	3.14
13	2.26	3.17
14	2.29	3.19
15	2.32	3.21

The ΔT_{30} value must be determined using Equations 5, 6, and 7 if all three of the following criteria are satisfied:

- The mean deviation from the embrittlement model for the data set is equal to or less than the value in Table 3.2-3 or the value derived using Equation 10 of this section;

- The T-statistic for the slope (T_{SURV}) estimated using Equation 11 is equal to or less than the maximum permissible T-statistic (T_{MAX}) in Table 3.2-4; and
- The largest normalized residual value is equal to or less than the appropriate allowable value from the third column in Table 3.2-5 and the second largest normalized residual value is equal to or less than the appropriate allowable value from the second column in Table 3.2-5.

If any of these criteria are not satisfied, the licensee shall review the data base for that heat in detail, including all parameters used in Equations 5, 6, and 7 of this section and the data used to determine the baseline Charpy V-notch curve for the material in an unirradiated condition. The licensee shall propose ΔT_{30} and RT_{MAX-X} values, considering their plant-specific surveillance data, to be used for evaluation relative to the acceptance criteria of this rule.

3.2.3 Reactor Vessel Beltline Inservice Inspection Data Evaluation

The licensee must have performed an examination of the reactor vessel beltline welds using procedures, equipment, and personnel that have been qualified under the ASME Code Section XI, Appendix VIII, Supplement 4 and Supplement 6, as specified in 10 CFR 50.55a(b)(2)(xv). The licensee shall verify that the flaw density and size distributions within the volume described in ASME Code, Section XI, Figures IWB-2500-1 and IWB-2500-2 and limited to a depth from the clad-to-base metal interface of 1-inch or 10 percent of the vessel thickness, whichever is greater, do not exceed the limits in Tables 3.2-6 and 3.2-7 based on the test results from the volumetric examination. For BVPS-1, the clad-to-base metal interface of 1-inch is greater than 10 percent of the vessel thickness. The verification of the flaw density and size distributions shall be performed line-by-line for Tables 3.2-6 and 3.2-7.

Table 3.2-6 Allowable Number of Flaws in Welds

Through-Wall Extent (TWE) of Flaw (inches)		Maximum number of flaws per 1,000 inches of weld length in the inspection volume that are greater than or equal to TWE_{MIN} and less than TWE_{MAX}
TWE_{MIN}	TWE_{MAX}	
0	0.075	No Limit
0.075	0.475	166.70
0.125	0.475	90.80
0.175	0.475	22.82
0.225	0.475	8.66
0.275	0.475	4.01
0.325	0.475	3.01
0.375	0.475	1.49
0.425	0.475	1.00
0.475	Infinite	0.00

The licensee shall determine the allowable number of weld flaws in the reactor vessel beltline by multiplying the values in Table 3.2-6 by the total length of the reactor vessel beltline welds that were volumetrically inspected and dividing by 1,000 inches of weld length.

Table 3.2-7 Allowable Number of Flaws in Plates or Forgings

Through-Wall Extent (TWE) of Flaw (inches)		Maximum number of flaws per 1,000 square inches of inside surface area in the inspection volume that are greater than or equal to TWE_{MIN} and less than TWE_{MAX}
TWE_{MIN}	TWE_{MAX}	
0	0.075	No Limit
0.075	0.375	8.05
0.125	0.375	3.15
0.175	0.375	0.85
0.225	0.375	0.29
0.275	0.375	0.08
0.325	0.375	0.01
0.375	Infinite	0.00

The licensee shall determine the allowable number of plate or forging flaws in their reactor vessel beltline by multiplying the values in Table 3.2-7 by the total surface area of the reactor vessel beltline plates or forgings that were volumetrically inspected and dividing by 1000 square inches.

For each flaw detected within the inner 1-inch of the inspection volume, measured from the clad-to-base metal interface, with a through-wall extent equal to or greater than 0.075 inches, the licensee shall document the dimensions of the flaw, including through-wall extent and length, whether the flaw is axial or circumferential in orientation and its location within the reactor vessel, including its azimuthal and axial positions and its depth embedded from the clad-to-base metal interface.

The licensee shall verify that axially oriented flaws located at the clad-to-base metal interface do not open to the vessel inside surface using surface or visual examination techniques capable of detecting and characterizing service induced cracking of the reactor vessel cladding. The licensee shall verify that all flaws between the clad-to-base metal interface and three-eighths of the reactor vessel thickness from the interior surface are within the allowable values in ASME Code, Section XI, Table IWB-3510-1.

The licensee shall perform analyses to demonstrate that the reactor vessel will have a through-wall cracking frequency (TWCF) of less than 1×10^{-6} per reactor year if the ASME Code, Section XI volumetric examination indicates any of the following:

- The flaw density and size in the inspection volume exceed the limits in Tables 3.2-6 and 3.2-7;

- There are axial flaws that penetrate through the clad into the low alloy steel reactor vessel shell, at a depth equal to or greater than 0.075 inches in through-wall extent from the clad-to-base metal interface; or
- Any flaws between the clad-to-base metal interface and three-eighths of the vessel thickness exceed the size allowable in ASME Code, Section XI, Table IWB-3510-1.

These analyses must address the effects on TWCF of the known sizes and locations of all flaws detected by the ASME Code, Section XI, Appendix VIII, Supplement 4 and Supplement 6 ultrasonic examination out to three-eighths of the vessel thickness from the inner surface, and may also take into account other reactor vessel-specific information, including fracture toughness information. The licensee shall also prepare and submit a neutron fluence map, projected to the date of license expiration, for the reactor vessel beltline clad-to-base metal interface and indexed in a manner that allows the determination of the neutron fluence at the location of the detected flaws.

3.3 Plant Specific Material Properties

Before performing the alternate pressurized thermal shock evaluation, a review of the latest plant-specific beltline region material properties for the BVPS-1 reactor vessel was performed. The beltline region of a reactor vessel, per the PTS rule (Reference 4), is defined as:

> ...the region of the reactor vessel (shell material including welds, heat-affected zones and plates or forgings) that directly surrounds the effective height of the active core and adjacent regions of the reactor vessel that are predicted to experience sufficient neutron radiation damage to be considered in the selection of the most limiting material with regard to radiation damage.

A summary of the best estimate copper, manganese, phosphorus, and nickel contents and $RT_{NDT(U)}$ values of the beltline materials for the BVPS-1 reactor vessel are summarized in Table 3.3-1. $RT_{NDT(U)}$ values for plate materials were determined using methodology contained in NUREG-0800, "Standard Review Plan for the Review of Safety Analysis Reports for Nuclear Power Plants," NRC Branch Technical Position 5-2, "Overpressurization Protection of Pressurized-Water Reactors While Operating at Low Temperatures," and weld material values were generic for Linde 0091 and 1092 weld fluxes. Figure 3.3-1 shows the location of the beltline materials.

The fabrication of the BVPS-1 reactor vessel was initiated by Babcock and Wilcox (B&W) (Reference 6) and completed by Combustion Engineering (CE). In the alternate PTS rule ΔT_{30} correlation, there are two options for plate material coefficient "B", a term used to calculate ΔT_{30}; one for CE manufactured vessels and one for non-CE manufactured vessels. According to the NRC reactor vessel integrity database (RVID,

Reference 7), BVPS-1 is considered to be a CE manufactured vessel. However, since B&W purchased, specified the requirements, and did the testing for the plate materials, the non-CE manufactured value for coefficient "B" will be used to calculate ΔT_{30} for the intermediate and lower shell plates.

Table 3.3-1 Details of RT_{MAX-X} Calculation Inputs for BVPS-1

No.	Region and Component Description	Material Identification	Material Type	Material Heat No.	Cu(1) [wt%]	Ni(1) [wt%]	P(2) [wt%]	Mn(3) [wt%]	$RT_{NDT(u)}$	
									[°F](1)	Method(2)
1	Intermediate Shell Plate	B6607-1	A 533B	C4381-1	0.14	0.62	0.015	1.40	43	MTEB 5-2
2	Intermediate Shell Plate	B6607-2	A 533B	C4381-2	0.14	0.62	0.015	1.40	73	MTEB 5-2
3	Lower Shell Plate	B6903-1	A 533B	C6317-1	0.21	0.54	0.010	1.31	27	MTEB 5-2
4	Lower Shell Plate	B7203-2	A 533B	C6293-2	0.14	0.57	0.015	1.30	20	MTEB 5-2
5	Intermediate Shell Longitudinal Weld	19-714A	Linde 1092	305424	0.28	0.63	0.013	1.63	-56	Generic
6	Intermediate Shell Longitudinal Weld	19-714B	Linde 1092	305424	0.28	0.63	0.013	1.63	-56	Generic
7	Lower Shell Longitudinal Weld	20-714A	Linde 1092	305414	0.34	0.61	0.012	1.63	-56	Generic
8	Lower Shell Longitudinal Weld	20-714B	Linde 1092	305414	0.34	0.61	0.012	1.63	-56	Generic
9	Intermediate to Lower Shell Circ. Weld	11-714	Linde 0091	90136	0.27	0.07	0.013	1.63	-56	Generic

Note:
1. Material chemistry and initial RT_{NDT} obtained from WCAP-15571-NP, Supplement 1, Revision 2 (Reference 5)
2. Phosphorus content and initial RT_{NDT} determination method are obtained from RVID (Reference 7)
3. Plate material manganese content is from plant-specific certified material test reports (Reference 6). Weld material manganese content are conservative estimates provided in Table 3.2-1

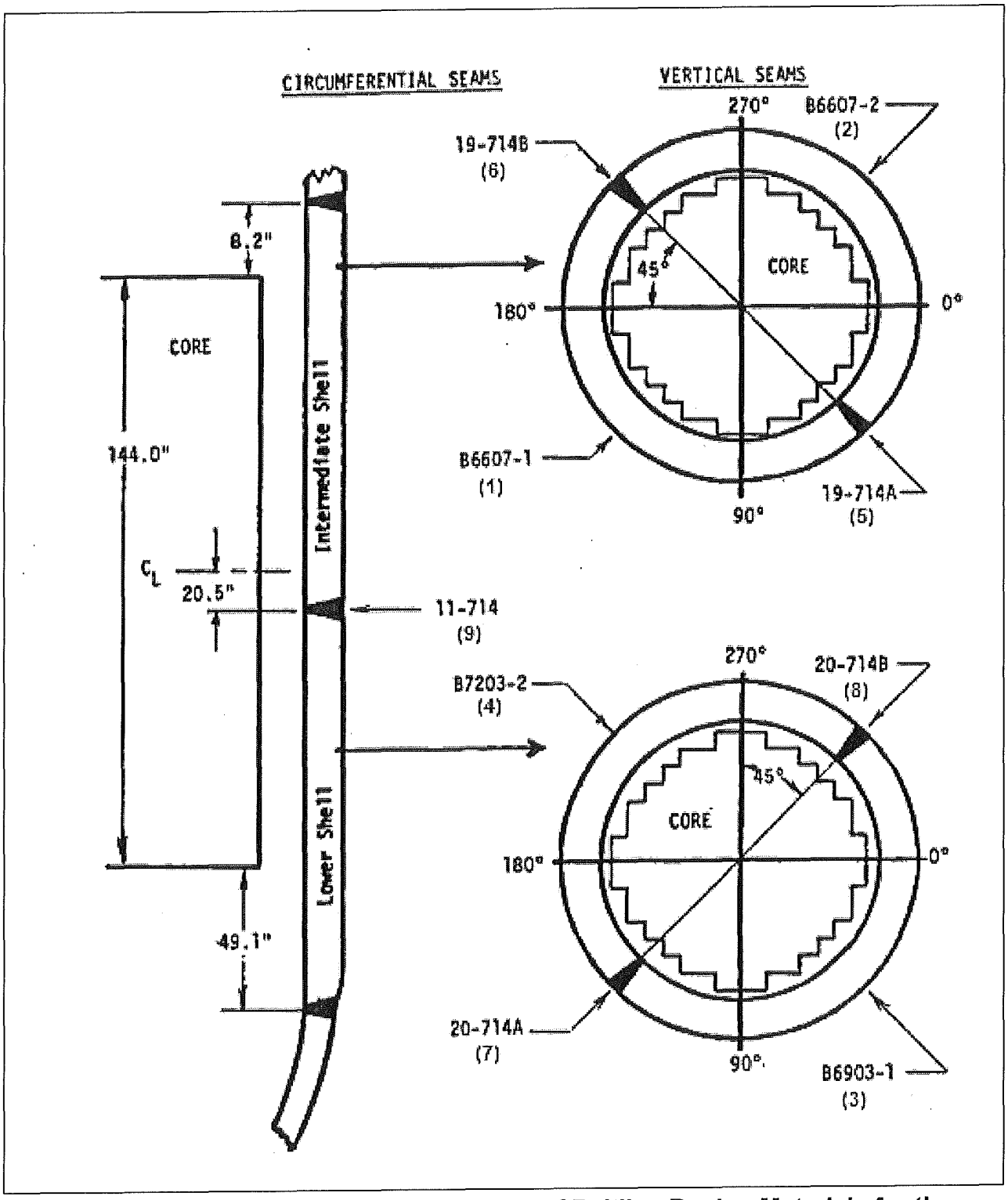

Figure 3.3-1: Identification and Location of Beltline Region Materials for the BVPS-1 Reactor Vessel

Note: Numbers in parentheses correspond to "No." column in Table 3.3-1

3.4 Neutron Fluence Values

The projected maximum neutron fluence (ionization energy [E] greater than [>] 1.0 mega-electron volts [MeV]) values at the clad-to-base metal interface of the BVPS-1 reactor vessel for 48, 50, and 54 EFPY are shown in Table 3.4-1 for the beltline materials. BVPS-1 is projected to have a total operating time of less than 50 EFPY at end-of-life (EOL). Neutron fluence values at 50 EFPY were interpolated from the 48 and 54 EFPY data available in WCAP-15571-NP, Supplement 1, Revision 2 (Reference 5).

In addition to neutron fluence data, the BVPS-1 reactor vessel cold leg temperature under normal operating full-power conditions from the beginning of full-power operation through the current operating cycle is presented in Table 3.4-2. The temperatures and cycle times for Fort Calhoun Unit 1 and St. Lucie Unit 1 are also presented, as they are required in order to complete the surveillance capsule data evaluation for the available sister plant material data. These temperatures will be used to determine the time-weighted average of the reactor cold leg temperature, T_C, used in Equation 6.

Table 3.4-1 Maximum Neutron Fluence on the Reactor Vessel Clad-to-Base Metal Interface for BVPS-1 at 48, 50 EOL, and 54 EFPY

No.	Region and Component Description	Maximum Fluence [10^{19} Neutron/cm^2, E > 1.0 MeV]		
		48 EFPY	50 EFPY	54 EFPY
1	Intermediate Shell Plate	5.35	5.57	6.02
2	Intermediate Shell Plate	5.35	5.57	6.02
3	Lower Shell Plate	5.35	5.57	6.02
4	Lower Shell Plate	5.35	5.57	6.02
5	Intermediate Shell Longitudinal Weld	1.04	1.08	1.17
6	Intermediate Shell Longitudinal Weld	1.04	1.08	1.17
7	Lower Shell Longitudinal Weld	1.05	1.09	1.17
8	Lower Shell Longitudinal Weld	1.05	1.09	1.17
9	Intermediate to Lower Shell Circ. Weld	5.33	5.55	6.00

Table 3.4-2 Reactor Vessel Cold Leg Temperature per Operating Cycle

Cycle	BVPS-1			Fort Calhoun Unit 1			St. Lucie Unit 1		
	T_C (°F)	Cycle Time (EFPY)	Cumulative Cycle Time (EFPY)	T_C (°F)	Cycle Time (EFPY)	Cumulative Cycle Time (EFPY)	T_C (°F)	Cycle Time (EFPY)	Cumulative Cycle Time (EFPY)
1	542.5	1.16	1.16	529	0.67	0.67	539	3.510	3.510
2	542.5	0.72	1.88	529	0.81	1.48	539		
3	542.5	0.79	2.67	532	0.58	2.06	539		
4	542.5	0.92	3.59	536	0.62	2.68	539		
5	542.5	1.19	4.78	536	0.78	3.46	549	1.119	4.630
6	542.5	1.11	5.89	545	0.81	4.27	549	4.890	9.520
7	542.5	1.25	7.14	545	0.72	4.99	549		
8	542.5	1.10	8.24	545	0.72	5.71	549		
9	542.5	1.38	9.62	544	0.96	6.67	549		
10	542.5	1.19	10.81	539	0.87	7.54	549	1.300	10.820
11	542.5	0.97	11.78	545	0.99	8.53	549	1.210	12.030
12	542.5	1.14	12.92	543	0.80	9.33	549	1.270	13.300
13	542.5	1.37	14.29	543	1.11	10.44	549	1.140	14.440
14	542.5	1.32	15.61	543	1.00	11.44	549	1.180	15.620
15	541.6	1.33	16.94				549	1.620	17.240
16	541.6	1.44	18.38						
17	541.6	1.23	19.61						
18	544.0	1.38	20.99						
19	544.0	1.47	22.46						
20	544.1	1.35	23.81						
21	544.0	1.34	25.15						

3.5 Surveillance Capsule Data

The BVPS-1 surveillance materials are a heat-specific match for lower shell plate B6903-1 (Heat C6317-1) and intermediate shell longitudinal weld wire heat 305424. The 30-foot-pound transition temperatures were determined using measured Charpy V-notch data plotted using CVGRAPH, Version 4.1 software which uses the requirements of 10 CFR 50, Appendix H.

There have been four surveillance capsule analyses conducted for BVPS-1. As a result, there are eight surveillance data points for material heat C6317-1 and four surveillance data points for weld wire heat 305424 measured at four different neutron fluences.

Tables 3.5-1 through 3.5-4 contain surveillance data of the BVPS-1 beltline materials required to perform the surveillance data evaluation. Tables 3.5-3 and 3.5-4 contain sister plant material data from Fort Calhoun Unit 1 and St. Lucie Unit 1, respectively. The BVPS-1 and St. Lucie Unit 1 surveillance material data were obtained from the latest surveillance capsule analyses (References 8, 9 and 10). The Fort Calhoun Unit 1 surveillance weld data were obtained from the surveillance material baseline evaluation (Reference 11) and RVID (Reference 7). Time-averaged coolant temperatures at the time of each surveillance capsule removal were determined using the data from Table 3.4-2.

Table 3.5-1 Surveillance Data for BVPS-1 Base Metal C6317-1 (Lower Shell Plate B6903-1)

Capsule	Chemical Composition				Fluence ($x10^{19}$ n/cm2, E > 1.0MeV)	EFPY	Withdraw Cycle	Time-Averaged Coolant Temperature (°F)	Measured ΔT_{30} Transition Temperature (°F)(1)	
	Cu [wt%]	Ni [wt%]	P [wt%]	Mn [wt%]					Longitudinal	Transverse
V	0.200	0.540	0.010	1.310	0.299	1.16	1	542.5	128.49	137.81
U	0.200	0.540	0.010	1.310	0.604	3.59	4	542.5	118.93	131.84
W	0.200	0.540	0.010	1.310	0.930	5.89	6	542.5	148.52	179.99
Y	0.200	0.540	0.010	1.310	2.05	14.3	13	542.5	142.18	166.93

Note:
1. Values are reported to the precision level calculated in Reference 8

Table 3.5-2 Surveillance Data for BVPS-1 Weld Wire Heat 305424 (Intermediate Shell Longitudinal Weld)

Capsule	Chemical Composition				Fluence ($x10^{19}$ n/cm2, E > 1.0MeV)	EFPY	Withdraw Cycle	Time-Averaged Coolant Temperature (°F)	Measured ΔT_{30} Transition Temperature (°F)(1)
	Cu [wt%]	Ni [wt%]	P [wt%]	Mn [wt%]					
V	0.260	0.620	0.018	1.370	0.299	1.16	1	542.5	159.72
U	0.260	0.620	0.018	1.370	0.604	3.59	4	542.5	166.32
W	0.260	0.620	0.018	1.370	0.930	5.89	6	542.5	187.73
Y	0.260	0.620	0.018	1.370	2.05	14.3	13	542.5	179.69

Note:
1. Values are reported to the precision level calculated in Reference 8

Table 3.5-3 Surveillance Data for Fort Calhoun Unit 1 Weld Wire Heat 305414 (BVPS-1 Lower Shell Longitudinal Welds)

Capsule	Chemical Composition				Fluence ($x10^{19}$ n/cm2, E > 1.0MeV)	EFPY	Withdraw Cycle	Time-Averaged Coolant Temperature (°F)	Measured ΔT_{30} Transition Temperature (°F)(1,2)
	Cu [wt%]	Ni [wt%]	P [wt%]	Mn [wt%]					
W-225	0.35	0.60	0.013	1.57	0.488	2.06	3	529.8	210
W-265	0.35	0.60	0.013	1.57	0.847	4.99	7	536.2	225
W-275	0.35	0.60	0.013	1.57	1.54	11.44	14	540.1	219

Notes:
1. TANH (hyperbolic tangent) curve fit data are obtained from RVID (Reference 7)
2. Values are reported to the precision level used in Reference 5

Table 3.5-4 Surveillance Data for St. Lucie Unit 1 Weld Wire Heat 90136 (BVPS-1 Intermediate Shell to Longitudinal Shell Circumferential Weld)

Capsule	Chemical Composition				Fluence ($x10^{19}$ n/cm2, E > 1.0MeV)	EFPY	Withdraw Cycle	Time-Averaged Coolant Temperature (°F)	Measured ΔT_{30} Transition Temperature (°F)(1)
	Cu [wt%]	Ni [wt%]	P [wt%]	Mn [wt%]					
97°	0.2291	0.0699	0.013	1.02	0.5174	4.63	5	541.4	72.34
104°	0.2291	0.0699	0.013	1.02	0.7885	9.52	9	545.3	67.4
284°	0.2291	0.0699	0.013	1.02	1.243	17.24	15	547.0	68.0

Note:
1. Values are reported to the precision level calculated in Reference 10

3.6 Inservice Inspection Data

Three 10-year inservice inspections have been performed for the BVPS-1 reactor vessel welds. The most recent inservice inspection was performed to ASME Code, Section XI, Appendix VIII, 1989 Edition with no Addenda, as modified by 10 CFR 50.55a(b)(2)(xiv, xv and xvi) (Reference 3). Table 3.6-1 and 3.6-2 contain data on the welds and the characteristics of any indications within the beltline region of the reactor vessel obtained from the latest inservice inspection report (Reference 13).

Table 3.6-1 Reactor Vessel Inservice Inspection History for BVPS-1 Beltline Materials

Weld Inservice Inspection No.	Material Identification	Region and Component Description	Date Last Inspected	Percent Coverage Obtained	Number of Recordable Indications	Number of Reportable Flaws(1)
RC-R-1-L-3	19-714A	Intermediate Shell Longitudinal Weld at 45°	2007	100%	1	None
RC-R-1-L-4	19-714B	Intermediate Shell Longitudinal Weld at 225°	2007	100%	No Indications	None
RC-R-1-C-5	11-714	Intermediate to Lower Shell Circ. Weld	2007	100%	6	None
RC-R-1-L-6	20-714A	Lower Shell Longitudinal Weld at 135°	2007	100%	1	None
RC-R-1-L-7	20-714B	Lower Shell Longitudinal Weld at 315°	2007	100%	1	None

Note:
1. Flaws that are reportable are those that exceed the ASME Code, Section XI, Table IWB-3510-1 acceptance standards

Table 3.6-2 Inservice Inspection Information for Reactor Vessel Beltline Flaws for BVPS-1

Weld Inservice Inspeciton No.	Weld Type (A or C)(1)	Weld Width (in.)	Indication No.	UT Beam Direction(1)	t (in.)	L (in.)	S (in.)	2a (in.)	a (in.)	Table IWB-3510-1 Disposition
RC-R-1-L-3	A	1.78	1	CCW	8.0	1.25	3.97	0.125	0.060	Allowable
RC-R-1-C-5	C	1.25	1	UP	8.0	1.25	3.34	0.2	0.1	Allowable
			2	UP	8.0	0.75	3.0	0.125	0.06	Allowable
			3	UP	8.0	0.75	3.55	0.2	0.1	Allowable
			4	UP	8.0	0.75	2.34	0.125	0.06	Allowable
			5	UP	8.0	1.1	1.22	0.125	0.06	Allowable
			6	UP	8.0	0.75	2.73	0.18	0.09	Allowable
RC-R-1-L-6	A	1.78	1	CCW	8.0	0.6	2.06	0.125	0.06	Allowable
RC-R-1-L-7	A	1.78	1	CCW	8.0	1.1	2.22	0.14	0.07	Allowable

Note:
1. A = Axial, C = Circumferential, CCW = Counter-clockwise, UT = Ultrasonic

3.7 Determination of RT_{MAX-X} Values for Beltline Region Materials

3.7.1 Calculation of RT_{MAX-X} Values

Using the alternate PTS rule methodology described in Section 3.2.1, RT_{MAX-X} values were generated for the beltline region materials of the BVPS-1 reactor vessel using fluence values at the EOL (50 EFPY). These values were calculated using reactor vessel beltline material copper, nickel, phosphorus, and manganese content, unirradiated RT_{NDT}, projected EOL neutron fluence values, and time-weighted average reactor vessel cold-leg temperature as described in Sections 3.3 and 3.4. Tables 3.7-1 through 3.7-3 summarize the results of Equations 1 through 7 when used to calculate RT_{MAX-X} for the BVPS-1 axial welds, plates, and circumferential welds.

The calculated RT_{MAX-X} values and applicable PTS screening criteria are provided in Table 3.7-4:

Table 3.7-1 RT_{MAX-AW} Calculation Results for BVPS-1 at 50 EFPY

Weld Group	Beltline Region Location	Material Heat No.	Fluence ($x10^{19}$ n/cm2, E > 1.0MeV)	ΔT_{30} (°F)	ΔT_{30} Adj. (°F)(1)	$RT_{NDT(u)}$ (°F)	Total RT_{NDT} (°F)(2)	$RT_{MAX-AW(i)}$ (°F)
Intermediate Shell Longitudinal Weld 19-714A	Intermediate Shell Longitudinal Weld	305424	1.08	222.7	0.0	-56	166.7	182.5
	Intermediate Shell Plate	C4381-1	1.08	109.5	0.0	43	152.5	
	Intermediate Shell Plate	C4381-2	1.08	109.5	0.0	73	182.5	
Intermediate Shell Longitudinal Weld 19-714B	Intermediate Shell Longitudinal Weld	305424	1.08	222.7	0.0	-56	166.7	182.5
	Intermediate Shell Plate	C4381-1	1.08	109.5	0.0	43	152.5	
	Intermediate Shell Plate	C4381-2	1.08	109.5	0.0	73	182.5	
Lower Shell Longitudinal Weld 20-714A	Lower Shell Longitudinal Weld	305414	1.09	228.0	0.0	-56	172.0	178.6
	Lower Shell Plate	C6317-1	1.09	125.2	26.36	27	178.6	
	Lower Shell Plate	C6293-2	1.09	104.5	0.0	20	124.5	
Lower Shell Longitudinal Weld 20-714B	Lower Shell Longitudinal Weld	305414	1.09	228.0	0.0	-56	172.0	178.6
	Lower Shell Plate	C6317-1	1.09	125.2	26.36	27	178.6	
	Lower Shell Plate	C6293-2	1.09	104.5	0.0	20	124.5	

Note:
1. Adjustment to ΔT_{30} due to surveillance data statistical checks. Details regarding this adjustment can be seen in Section 3.7.2.
2. The sum of ΔT_{30}, the adjustment to ΔT_{30}, and $RT_{NDT(u)}$.

Table 3.7-2 RT_{MAX-PL} Calculation Results for BVPS-1 at 50 EFPY

Beltline Region Location	Material Heat No.	Fluence ($x10^{19}$ n/cm2, E > 1.0MeV)	ΔT_{30} (°F)	ΔT_{30} Adj. (°F)(1)	$RT_{NDT(u)}$ (°F)	Total RT_{NDT} (°F)(2)	RT_{MAX-PL} (°F)
Intermediate Shell Plate B6607-1	C4381-1	5.57	156.0	0.0	43	199.0	229.0
Intermediate Shell Plate B6607-2	C4381-2	5.57	156.0	0.0	73	229.0	
Lower Shell Plate B6903-1	C6317-1	5.57	168.1	26.36	27	221.4	
Lower Shell Plate B7203-2	C6293-2	5.57	149.4	0.0	20	169.4	

Note:
1. Adjustment to ΔT_{30} due to surveillance data statistical checks. Details regarding this adjustment can be seen in Section 3.7.2.
2. The sum of ΔT_{30}, the adjustment to ΔT_{30}, and $RT_{NDT(u)}$.

Table 3.7-3 RT_{MAX-CW} Calculation Results for BVPS-1 at 50 EFPY

Weld Group	Beltline Region Location	Material Heat No.	Fluence ($x10^{19}$ n/cm2, E > 1.0MeV)	ΔT_{30} (°F)	ΔT_{30} Adj. (°F)(1)	$RT_{NDT(u)}$ (°F)	Total RT_{NDT} (°F)(2)	RT_{MAX-CW} (°F)
Intermediate to Lower Shell Circ. Weld 11-714	Intermediate to Lower Shell Circ. Weld	90136	5.55	155.2	0.0	-56	99.2	228.8
	Intermediate Shell Plate	C4381-1	5.55	155.8	0.0	43	198.8	
	Intermediate Shell Plate	C4381-2	5.55	155.8	0.0	73	228.8	
	Lower Shell Plate	C6317-1	5.55	168.0	26.36	27	221.3	
	Lower Shell Plate	C6293-2	5.55	149.3	0.0	20	169.3	

Note:
1. Adjustment to ΔT_{30} due to surveillance data statistical checks. Details regarding this adjustment can be seen in Section 3.7.2.
2. The sum of ΔT_{30}, the adjustment to ΔT_{30}, and $RT_{NDT(u)}$.

Table 3.7-4 RT_{MAX-X} values for BVPS-1 at 50 EFPY

	BVPS-1	10 CFR 50.61a Screening Criteria
Axial Weld—RT_{MAX-AW} (°F)	182.5	269
Plate—RT_{MAX-PL} (°F)	229.0	356
Axial Weld and Plate—RT_{MAX-AW} + RT_{MAX-PL}	411.5	538
Circumferential Weld—RT_{MAX-CW} (°F)	228.8	312

The RT_{MAX-X} values calculated for BVPS-1 are less than PTS screening criteria and therefore meet this requirement of the alternate PTS rule. Upon NRC issuance of the license amendment, FENOC intends to document Table 3.7-4 values in the BVPS-1 Pressure and Temperature Limits Report.

3.7.2 Surveillance Capsule Data Statistical Checks

As discussed in Section 3.2.2, the alternate PTS rule (Reference 1) requires that surveillance data that could affect the calculation of ΔT_{30} be evaluated. This requirement is only applicable for materials for which three or more points of surveillance data exist at three or more unique fluence values.

For BVPS-1, there have been four surveillance capsules withdrawn to date. The BVPS-1 and sister plant surveillance materials, along with their calculated values of ΔT_{30}, can be seen below in Table 3.7-5. This table includes a list of the tested and analyzed capsules for each material.

Table 3.7-5 Surveillance Capsule Materials for BVPS-1

No.	Region and Component Description	Material Identification (Heat No.)	Capsule	Direction	Fluence ($x10^{19}$ n/cm2, E > 1.0MeV)	Calculated ΔT_{30} (°F)
3	Lower Shell Plate Base Metal	B6903-1 (C6317-1)	V	Longitudinal	0.299	75.85
			U	Longitudinal	0.604	94.79
			W	Longitudinal	0.930	105.34
			Y	Longitudinal	2.05	126.06
			V	Transverse	0.299	75.85
			U	Transverse	0.604	94.79
			W	Transverse	0.930	105.34
			Y	Transverse	2.05	126.06
5 6	Surveillance Program Weld Metal	19-717A & B (305424)	V	N/A	0.299	148.40
			U	N/A	0.604	178.76
			W	N/A	0.930	193.11
			Y	N/A	2.05	217.24
7 8	Ft. Calhoun Surveillance Program Weld Metal	20-717A & B (305414)	W-225	N/A	0.488	194.42
			W-265	N/A	0.847	210.28
			W-275	N/A	1.54	225.58
9	St. Lucie Surveillance Program Weld Metal	11-714 (90136)	97°	N/A	0.5174	75.34
			104°	N/A	0.7885	81.00
			284°	N/A	1.243	88.28

All of the materials listed have at least three data points at three or more different neutron fluences, and therefore this data can be used to determine if the surveillance data shows a significantly different trend than the embrittlement model predicts. Using the methodology described in Section 3.2.2, a mean deviation test, a slope deviation test, and an outlier deviation test were conducted for each surveillance material. The inputs for the surveillance data evaluations, including the measured values of ΔT_{30}, are

provided in Tables 3.5-1 through 3.5-4 for the four surveillance materials. The results of the evaluations are shown in Tables 3.7-6a, 3.7-7, 3.7-8, and 3.7-9.

Table 3.7-6a shows that both the mean and outlier deviation tests are not satisfied by the base metal surveillance capsule results for lower shell plate B6903-1. As described in Section 3.2.2, the alternate PTS rule requires proposing ΔT_{30} and RT_{MAX-X} values, considering their plant-specific surveillance data, to be used for evaluation relative to the acceptance criteria. Since the eight base-metal surveillance capsule results in Table 3.5-1 were included in the database used for development of Equations (5) to (7) in the alternate PTS rule, the proposed adjustment to the ΔT_{30} and RT_{MAX-X} values should not be excessive. That is, the variability in the prediction of mean values (residual values) for only eight measurements is expected to be higher than the variability (standard deviation) for all 309 measurements (Reference 12) used to develop the equation constants for plate materials with the higher copper content. Therefore, a minimum adjustment of 26.36°F to just pass the mean deviation test in Table 3.7-6a was selected. This adjustment was added to the calculated values of ΔT_{30} in Table 3.7-5 and thus subtracted from each of the eight residual values in Table 3.7-6a. As shown in Table 3.7-6b, these adjusted residual values all pass the mean deviation test, slope deviation test, and outlier deviation test. The surveillance capsule data adjustment of 26.36°F was applied to the calculated values of ΔT_{30} for lower shell plate B6903-1 (Heat C6317-1) in Tables 3.7-1 to 3.7-3, but it did not affect the calculated values of RT_{MAX-X} in Table 3.7-4 because there were other materials without any adjustment to the calculated values of ΔT_{30} that were more limiting.

Table 3.7-6a Surveillance Data Evaluation for BVPS-1 Base Metal Heat C6317-1 (Lower Shell Plate B6903-1) without any Adjustment

Capsule	Direction	Log of Fluence "x"	Residual "r"	$(x - x_{avg})^2$	r* (r/sigma)
V	Longitudinal	18.48	52.64	0.167	2.48
U	Longitudinal	18.78	24.14	0.011	1.14
W	Longitudinal	18.97	43.18	0.007	2.04
Y	Longitudinal	19.31	16.12	0.183	0.76
V	Transverse	18.48	61.96	0.167	2.92
U	Transverse	18.78	37.05	0.011	1.75
W	Transverse	18.97	74.65	0.007	3.52
Y	Transverse	19.31	40.87	0.183	1.93

Mean Deviation Test		Slope Deviation Test		Outlier Deviation Test	
Standard Deviation (sigma)	21.2	Slope (m)	-25.64	Largest r*	3.52
Mean Deviation	43.8	Standard Error of Fit	18.64	Largest allowable r*	3.02
Maximum Mean Residual	17.5	Standard Error of Slope	21.74	Pass/Fail?	Fail
Pass/Fail?	Fail	T-Statistic	-1.18	Second largest r*	2.92
		Critical T-Statistic	3.14	Second largest allowable r*	2.05
		Pass/Fail?	Pass	Pass/Fail?	Fail

Table 3.7-6b Surveillance Data Evaluation for BVPS-1 Base Metal Heat C6317-1 (Lower Shell Plate B6903-1) with an Adjustment of 26.36°F

Capsule	Direction	Log of Fluence "x"	Adjusted Residual "r"	$(x - x_{avg})^2$	Adjusted r* (r/sigma)
V	Longitudinal	18.48	26.28	0.167	1.24
U	Longitudinal	18.78	-2.22	0.011	-0.10
W	Longitudinal	18.97	16.82	0.007	0.79
Y	Longitudinal	19.31	-10.24	0.183	-0.48
V	Transverse	18.48	35.60	0.167	1.68
U	Transverse	18.78	10.69	0.011	0.50
W	Transverse	18.97	48.29	0.007	2.28
Y	Transverse	19.31	14.51	0.183	0.68

Mean Deviation Test		Slope Deviation Test		Outlier Deviation Test	
Standard Deviation (sigma)	21.2	Slope (m)	-25.64	Largest r*	2.28
Mean Deviation	17.5	Standard Error of Fit	18.64	Largest allowable r*	3.02
Maximum Mean Residual	17.5	Standard Error of Slope	21.74	Pass/Fail?	Pass
Pass/Fail?	Pass	T-Statistic	-1.18	Second largest r*	1.68
		Critical T-Statistic	3.14	Second largest allowable r*	2.05
		Pass/Fail?	Pass	Pass/Fail?	Pass

Table 3.7-7 Surveillance Data Evaluation for BVPS-1 Weld Wire Heat 305424 (Intermediate Shell Longitudinal Weld)

Capsule	Direction	Log of Fluence "x"	Residual "r"	$(x - x_{avg})^2$	r* (r/sigma)
V	N/A	18.48	11.32	0.167	0.43
U	N/A	18.78	-12.44	0.011	-0.47
W	N/A	18.97	-5.38	0.007	-0.20
Y	N/A	19.31	-37.55	0.183	-1.42

Mean Deviation Test		Slope Deviation Test		Outlier Deviation Test	
Standard Deviation (sigma)	26.4	Slope (m)	-54.02	Largest r*	0.43
Mean Deviation	-11.0	Standard Error of Fit	9.08	Largest allowable r*	2.81
Maximum Mean Residual	30.8	Standard Error of Slope	14.97	Pass/Fail?	Pass
Pass/Fail?	Pass	T-Statistic	-3.61	Second largest r*	-0.20
		Critical T-Statistic	6.96	Second largest allowable r*	1.73
		Pass/Fail?	Pass	Pass/Fail?	Pass

Table 3.7-8 Surveillance Data Evaluation for Fort Calhoun Unit 1 Weld Wire Heat 305414 (BVPS-1 Lower Shell Longitudinal Welds)

Capsule	Direction	Log of Fluence "x"	Residual "r"	$(x - x_{avg})^2$	r* (r/sigma)
W-225	N/A	18.69	15.58	0.061	0.59
W-265	N/A	18.93	14.72	0.000	0.56
W-275	N/A	19.19	-6.58	0.064	-0.25

Mean Deviation Test	
Standard Deviation (sigma)	26.4
Mean Deviation	7.9
Maximum Mean Residual	35.5
Pass/Fail?	Pass

Slope Deviation Test	
Slope (m)	-44.93
Standard Error of Fit	7.98
Standard Error of Slope	22.59
T-Statistic	-1.99
Critical T-Statistic	6.96
Pass/Fail?	Pass

Outlier Deviation Test	
Largest r*	0.59
Largest allowable r*	2.71
Pass/Fail?	Pass
Second largest r*	0.56
Second largest allowable r*	1.55
Pass/Fail?	Pass

Table 3.7-9 Surveillance Data Evaluation for St. Lucie Unit 1 Weld Wire Heat 90136 (BVPS-1 Intermediate Shell to Longitudinal Shell Circumferential Weld)

Capsule	Direction	Log of Fluence "x"	Residual "r"	$(x - x_{avg})^2$	r* (r/sigma)
97°	N/A	18.71	-3.00	0.035	-0.11
104°	N/A	18.90	-13.60	0.000	-0.52
284°	N/A	19.09	-20.28	0.037	-0.77

Mean Deviation Test	
Standard Deviation (sigma)	26.4
Mean Deviation	-12.3
Maximum Mean Residual	35.5
Pass/Fail?	Pass

Slope Deviation Test	
Slope (m)	-45.25
Standard Error of Fit	1.87
Standard Error of Slope	6.95
T-Statistic	-6.51
Critical T-Statistic	31.82
Pass/Fail?	Pass

Outlier Deviation Test	
Largest r*	-0.12
Largest allowable r*	2.71
Pass/Fail?	Pass
Second largest r*	-0.52
Second largest allowable r*	1.55
Pass/Fail?	Pass

As shown in Tables 3.7-6b through 3.7-9, the surveillance results for the plate and weld surveillance materials now satisfy the criteria in the alternate PTS rule for all three tests. Therefore, the use of Equations (5) to (7) in the alternate PTS rule (Reference 1) for calculation of ΔT_{30} with the surveillance data adjustment of Table 3.7-6b is acceptable for BVPS-1.

3.7.3 Reactor Vessel Beltline Inservice Inspection Data Evaluation

In accordance with the requirements discussed in Section 3.2.3, the results of the latest inservice inspection of the reactor vessel of BVPS-1 were analyzed in detail to ensure that the recorded indications met the acceptance criteria. The reactor vessel inservice inspection data specified in Section 3.6 indicates that the Category B-A examinations of the BVPS-1 reactor vessel beltline region welds have been performed to ASME Code, Section XI, Appendix VIII requirements. At least one inspection has been performed on each weld that is inspected per Code requirements. Inspection coverage of the welds within the beltline region has been 100 percent. No inside surface flaws were found in the beltline welds because all indications were reported to be subsurface.

After reviewing the data from the last inservice inspection, conducted in 2007 (Reference 13), nine indications with the potential to be located in the beltline region of the BVPS-1 reactor vessel were recorded. Seven of these indications were adjacent to the core and therefore within the reactor vessel beltline region. Four of those indications fall within the inner 3/8t of the reactor vessel thickness and are allowable per ASME Code, Section XI, 1989 edition (Reference 3), Table IWB-3510-1. None of the indications fall within the inner 1-inch of the reactor vessel. Therefore, no further evaluation of the alternate PTS rule Table 2 and 3 flaw limits is required and BVPS-1 inherently meets the examination and flaw assessment requirements detailed in Section 3.2.3. This evaluation of these inservice inspection indications is summarized in Table 3.7-10.

Table 3.7-10 Evaluation of Inservice Inspection Information for Reactor Vessel Beltline Flaws for BVPS-1

Weld Inservice Inspection No.	Indication No.	TWE (in.)[1]	Location (Plate/Weld)	Adjacent to Core?	Inner (3/8) thickness (t) ?	Inner (1/10)t or 1"?	Flaw Orientation	Flaw Limit Evaluation Required?
RC-R-1-L-3	1	0.125	Plate	Yes	No	No	Axial	No
RC-R-1-C-5	1	0.2	Weld	Yes	No	No	Circ.	No
	2	0.125	Plate	Yes	Yes	No	Circ.	No
	3	0.2	Plate	Yes	No	No	Circ.	No
	4	0.125	Plate	Yes	Yes	No	Circ.	No
	5	0.125	Plate	Yes	Yes	No	Circ.	No
	6	0.18	Weld	Yes	Yes	No	Circ.	No
RC-R-1-L-6	1	0.125	Plate	No	Yes	No	Axial	No
RC-R-1-L-7	1	0.14	Weld	No	Yes	No	Axial	No

Note:
1. Through-wall extent (TWE) is the same as the dimension 2a from Table 3.6-2

3.8 Evaluation of Extended Beltline Materials

The alternate PTS rule requires that RT_{MAX-X} values be projected for all materials in the reactor vessel beltline. The "beltline" is defined in Section 3.3.

Historically, before the consideration of extended operating licenses, and consistent with the definition above, the beltline was considered to only be those materials that were immediately adjacent to the core. Consideration of these materials was also sufficient for consideration of the adjacent regions as these beltline materials typically extend for some vertical distance above and below the immediate core region. With the advent of the extended operating license, a concern arose that fluence accumulation, and subsequently embrittlement, could become significant in regions outside of those that had been previously considered as part of the "beltline." A guideline was adopted in NUREG-1801, "Generic Aging Lessons Learned (GALL) Report" (GALL report), that irradiation effects be considered for all components with fluence accumulations greater than 1×10^{17} n/cm^2, E > 1.0 MeV. Materials with fluence levels meeting this criterion, other than those materials immediately adjacent to the core, are now typically referred to as extended beltline materials.

In light of the GALL report, it was determined that the BVPS-1 upper shell forging and the upper to intermediate shell girth weld would accumulate fluence levels equal to or greater than 1×10^{17} n/cm^2, E > 1.0 MeV. Appropriate material properties were determined for these materials and their ΔT_{30} and RT_{PTS} values are shown in Table 3.8-1. Materials below the core that have not been previously considered as part of the traditional beltline will not accumulate fluence levels equal to or greater than 1×10^{17} n/cm^2, E > 1.0 MeV.

The upper shell forging has a RT_{PTS} value approximately one half of the value for the alternate PTS rule limiting beltline plate (Intermediate Shell Plate B6607-2). Furthermore, the RT_{MAX} screening criteria in Table 1 of the alternate PTS rule is the same for plates and forgings not susceptible to underclad cracking. Surveillance data is not available for the upper shell forging. Therefore, Intermediate Shell Plate B6607-2 will remain the limiting beltline material for the alternate PTS rule.

The upper to intermediate shell girth weld has an RT_{PTS} value that is slightly higher than the intermediate to lower shell girth weld. However, this weld is the same heat (305414) as the lower shell longitudinal welds. Since the upper to intermediate shell girth weld accumulates lower fluence than the lower shell longitudinal welds, and the welds have the same initial RT_{NDT}, the $RT_{NDT} + \Delta T_{30}$ for this girth weld will be less than that for lower shell longitudinal welds. Since the calculation of RT_{MAX-CW} considers adjacent materials, including the lower shell longitudinal welds, but is controlled by the higher $RT_{NDT} + \Delta T_{30}$ of the Intermediate Shell Plate (B6607-2), inclusion of the upper to intermediate shell girth weld will have no impact on the calculation and resulting value for RT_{MAX-CW}. Furthermore, the evaluation of surveillance capsule data for the lower shell longitudinal welds is applicable and acceptable for the upper to intermediate shell girth weld.

The inservice inspection results have been reviewed for the intermediate to upper shell girth weld, and it has been determined that two indications were recorded during the last inservice inspection. Both indications are allowable per Table IWB-3510-1 of ASME Section XI. However, only one of these indications is within the inner 3/8t of the reactor vessel. Neither of these indications is within the inner 1-inch or 1/10t of the reactor vessel and therefore, the limits of Tables 2 and 3 of the alternate PTS rule do not apply.

The RT_{MAX-X} values calculated for the traditional beltline materials, as identified in Section 3.7.1, remain the limiting values for BVPS-1 implementation of the alternate PTS rule.

Table 3.8-1 RT_{PTS} Values for BVPS-1 Materials with Fluence > 1 x 10^{17} n/cm^2 (E > 1.0 MeV) at 50 EFPY

Material Description	Material ID	Heat Number (Lot Number)	Surface Neutron Fluence (x10^{19} n/cm^2)	Fluence Factor, FF[a]	Chemistry Factor (CF) (°F)	Initial RT_{NDT}[b] (°F)	ΔRT_{PTS}[c] (°F)	σ_U (°F)	σ_Δ (°F)	Margin[d] (°F)	RT_{PTS}[e] (°F)
Upper Shell Forging	B6604	123V339VA1	0.625	0.8685	84.2	40	73.1	0	17	34	147.1
Upper to Intermediate Shell Girth Weld	10-714	305414 (3951 & 3958)	0.625	0.8685	209.11	-56	181.6	17	28	65.5	191.1
→ Using non-credible surveillance data[f]			0.625	0.8685	216.9	-56	188.4	17	28[f]	65.5	197.9
Upper to Intermediate Shell Girth Weld	10-714	AOFJ	0.625	0.8685	41.0	10	35.6	17	17.8	49.2	94.8
		FOIJ	0.625	0.8685	41.0	10	35.6	17	17.8	49.2	94.8
		EODJ	0.625	0.8685	27.0	10	23.4	17	11.7	41.3	74.8
		HOCJ	0.625	0.8685	27.0	10	23.4	17	11.7	41.3	74.8

Notes:

a. FF = fluence factor = $f^{(0.28 - 0.10 \log (f))}$.
b. Initial RT_{NDT} value for the upper shell forging is a measured value. All other values are generic.
c. ΔRT_{PTS} = CF x FF.
d. Margin (M) = $2(\sigma_U^2$ [standard deviation for $RT_{NDT(U)}$] + σ_Δ^2 [standard deviation for RT_{NDT}]$)^{1/2}$.
e. RT_{PTS} = Initial RT_{NDT} + ΔRT_{PTS} + Margin.
f. The Fort Calhoun surveillance weld metal is the same weld heat as the BVPS-1 upper to intermediate shell girth weld (heat 305414). The Fort Calhoun surveillance weld data is non-credible; therefore, the higher σ_Δ term of 28°F was utilized for BVPS-1 weld heat 305414.

3.9 CONCLUSION

Based on this evaluation, the BVPS-1 reactor vessel is acceptable per the alternate PTS rule acceptance criteria. As shown in Section 3.7.1, all of the beltline region materials in the BVPS-1 reactor vessel have EOL (50 EFPY) RT_{MAX-X} values below the screening criteria values. After conducting surveillance data statistical tests, it was determined that the surveillance data did not satisfy the alternate PTS rule requirements. Adjustments were made to the calculations of the RT_{MAX-X} values and incorporated into the analysis. These adjustments did not change the limiting RT_{MAX-X} values. A review of the latest reactor vessel inservice inspection report for BVPS-1 showed that the flaw density and size distribution is acceptable per the alternate PTS rule requirements.

4.0 REGULATORY EVALUATION

FirstEnergy Nuclear Operating Company (FENOC) proposes to amend the Beaver Valley Power Station, Unit No. 1 Operating License DPR-66. The requested amendment involves a change to the operating license that would authorize implementation of 10 CFR 50.61a (alternate pressurized thermal shock [PTS] rule), "Alternate fracture toughness requirements for protection against pressurized thermal shock events," in lieu of the requirements of 10 CFR 50.61, "Fracture toughness requirements for protection against pressurized thermal shock events." Implementation of the alternate PTS rule would result in a burden reduction while continuing to provide adequate protection to public health and safety.

4.1 Significant Hazards Consideration

FirstEnergy Nuclear Operating Company has evaluated whether or not a significant hazards consideration is involved with the proposed amendment by focusing on the three standards set forth in 10 CFR 50.92, "Issuance of amendment," as discussed below:

1. Does the proposed change involve a significant increase in the probability or consequences of an accident previously evaluated?

   Response: No

   This amendment request would allow implementation of the alternate PTS rule in lieu of 10 CFR 50.61 and would not involve a significant increase in the probability or consequences of an accident. Application of the alternate PTS rule in lieu of 10 CFR 50.61 would not result in physical alteration of a plant structure, system or component, or installation of new or different types of equipment. Further, application of the alternate PTS rule would not significantly affect the probability of accidents previously evaluated in the Updated Final Safety Analysis Report (UFSAR) or cause a change to any of the dose analyses associated with the UFSAR accidents because accident mitigation functions would remain unchanged. Use of the alternate PTS rule would change how fracture toughness of the reactor

vessel is determined and does not affect reactor vessel neutron radiation fluence. As such, implementation of the alternate PTS rule in lieu of 10 CFR 50.61 would not increase the likelihood of a malfunction.

Therefore, the proposed change does not involve a significant increase in the probability or consequences of an accident previously evaluated.

2. Does the proposed change create the possibility of a new or different kind of accident from any accident previously evaluated?

   Response: No

   The amendment request would allow implementation of the alternate PTS rule in lieu of 10 CFR 50.61. No new accident scenarios, failure mechanisms, or limiting single failures are introduced as a result of the proposed change. No physical plant alterations are made as a result of the proposed change. The proposed change does not challenge the performance or integrity of any safety-related system.

   Therefore, the proposed change does not create the possibility of a new or different kind of accident from any previously evaluated.

3. Does the proposed change involve a significant reduction in a margin of safety?

   Response: No

   The amendment request would authorize implementation of the alternate PTS rule in lieu of 10 CFR 50.61. The alternate PTS rule would maintain the same functional requirements for the facility as 10 CFR 50.61. The alternate PTS rule establishes screening criteria that limit levels of embrittlement beyond which operation cannot continue without further plant-specific evaluation or modifications. Sufficient safety margins are maintained to ensure that any potential increases in core damage frequency and large early release frequency resulting from implementation of the alternate PTS rule are negligible. As such, there would be no significant reduction in the margin of safety as a result of use of the alternate PTS rule. The margin of safety associated with the acceptance criteria of accidents previously evaluated in the UFSAR is unchanged. The proposed change would have no affect on the availability, operability, or performance of the safety-related systems and components.

   Therefore, the proposed change does not involve a significant reduction in a margin of safety.

Based on the above, FENOC concludes that the proposed amendment does not involve a significant hazards consideration under the criteria set forth in 10 CFR 50.92(c) and, accordingly, a finding of "no significant hazards consideration" is justified.

4.2 Applicable Regulatory Requirements / Criteria

An assessment of the proposed changes concluded that there are no exceptions to any of the following regulations. Therefore, FENOC would remain in compliance with the following regulations and guidance:

10 CFR 50, Appendix A, "General Design Criteria for Nuclear Power Plants," GDC 1, "Quality Standards and Records," requires the structures, systems, and components important to safety to be designed, fabricated, erected, and tested to quality standards commensurate with the importance of the safety functions to be performed. Where generally recognized codes and standards are used, they shall be identified and evaluated to determine their applicability, adequacy, and sufficiency and shall be supplemented or modified as necessary to assure a quality product in keeping with the required safety function.

GDC 31, "Fracture prevention of the reactor coolant pressure boundary," requires that the reactor coolant pressure boundary be designed with sufficient margin to assure that when stressed under operating, maintenance, testing, and postulated accident conditions (1) the boundary behaves in a nonbrittle manner and (2) the probability of rapidly propagating fracture is minimized. The design shall reflect consideration of service temperatures and other conditions of the boundary material under operating, maintenance, testing, and postulated accident conditions and the uncertainties in determining (1) material properties, (2) the effects of irradiation on material properties, (3) residual, steady state and transient stresses, and (4) size of flaws.

GDC 32, "Inspection of the reactor coolant pressure boundary," requires components that are part of the reactor coolant pressure boundary be designed to permit (1) periodic inspection and testing of important areas and features to assess their structural and leaktight intergrity, and (2) an appropriate material surveillance program for the reactor pressure vessel.

10 CFR 50.60, "Acceptance criteria for fracture prevention measures for lightwater nuclear power reactors for normal operation," requires that all lightwater reactors meet the fracture toughness and material surveillance program requirements for the reactor coolant pressure boundary set forth in 10 CFR 50, Appendix G and Appendix H.

10 CFR 50, Appendix H, "Reactor Vessel Material Surveillance Program Requirements," ensures that changes in the fracture toughness properties of ferritic materials in the reactor vessel beltline region of light water nuclear power reactors which result from exposure of these materials to neutron irradiation and the thermal

environment are monitored. Under the program, fracture toughness test data are obtained from material specimens exposed in surveillance capsules, which are withdrawn periodically from the reactor vessel.

Regulatory Guide 1.190, "Calculational and Dosimetry Methods for Determining Pressure Vessel Neutron Fluence," March 2001, describes methods for determining reactor pressure vessel fluence.

Beaver Valley Power Station (BVPS), Unit No. 1 Updated Final Safety Analysis Report (UFSAR) Table 16-1, "Unit 1 License Renewal Commitments," includes a commitment, Item Number 24, associated with flux reduction plans to manage PTS. The same commitment is contained in Appendix A of the NRC, "Safety Evaluation Report Related to the License Renewal of Beaver Valley Power Station, Units 1 and 2 (NUREG-1929)," dated October 2009 and states:

> Prior to exceeding the PTS screening criteria for BVPS Unit 1, FENOC will select a flux reduction measure to manage PTS in accordance with the requirements of 10 CFR 50.61. A flux reduction plan will be submitted to the NRC for review and approval.

This commitment will no longer be necessary following NRC approval of this license amendment request. FirstEnergy Nuclear Operating Company plans to withdraw this commitment via the appropriate process following approval of the license amendment.

4.3 Conclusions

In conclusion, based on the considerations discussed above, (1) there is reasonable assurance that the health and safety of the public will not be endangered by operation in the proposed manner, (2) such activities will be conducted in compliance with the Commission's regulations, and (3) the issuance of the amendment will not be inimical to the common defense and security or to the health and safety of the public.

5.0 ENVIRONMENTAL CONSIDERATION

A review has determined that the proposed amendment would change a requirement with respect to installation or use of a facility component located within the restricted area, as defined in 10 CFR 20, or would change an inspection or surveillance requirement. However, the proposed amendment does not involve (i) a significant hazards consideration, (ii) a significant change in the types or significant increase in the amounts of any effluents that may be released offsite, or (iii) a significant increase in individual or cumulative occupational radiation exposure. Accordingly, the proposed amendment meets the eligibility criterion for categorical exclusion set forth in 10 CFR 51.22(c)(9). Therefore, pursuant to 10 CFR 51.22(b), no environmental impact statement or environmental assessment need be prepared in connection with the proposed amendment.

6.0 REFERENCES

1. Code of Federal Regulations, 10 CFR Part 50.61a, "Alternate Fracture Toughness Requirements for Protection against Pressurized Thermal Shock Events," U.S. Nuclear Regulatory Commission, Washington D. C., Federal Register, Volume 75, No. 1, dated January 4, 2010, and No. 22 with corrections to part (g) dated February 3, 2010, March 8, 2010, and November 26, 2010.

2. NUREG-1874, "Recommended Screening Limits for Pressurized Thermal Shock (PTS)," March 2010.

3. ASME Boiler and Pressure Vessel Code, Section XI, 1989 Edition with no Addenda, American Society of Mechanical Engineers, New York.

4. Code of Federal Regulations, 10 CFR Part 50.61, "Fracture Toughness Requirements For Protection Against Pressurized Thermal Shock Events," Federal Register, Volume 60, No. 243, dated December 19, 1995 and last updated on January 4, 2010.

5. WCAP-15571-NP, Supplement 1, Revision 2, "Analysis of Capsule Y from Beaver Valley Unit 1 Reactor Vessel Radiation Surveillance Program," September 2011.

6. CMTR-RV-DLW, "Reactor Vessel Certified Material Test Reports for DLW."

7. Nuclear Regulatory Commission Reactor Vessel Integrity Database (RVID), Version 2.0.1, July 6, 2000.

8. WCAP-15571-NP, Revision 1, "Analysis of Capsule Y from Beaver Valley Unit 1 Reactor Vessel Radiation Surveillance Program," April 2008, (Accession No. ML082740207).

9. WCAP-12751, Revision 0, "Analysis of the Capsule at 104° from the Florida Power and Light Company St. Lucie Unit No. 1 Reactor Vessel Radiation Surveillance Program," November 1990.

10. WCAP-15446, Revision 1, "Analysis of Capsule 284° from the Florida Power and Light Company St. Lucie Unit No. 1 Reactor Vessel Radiation Surveillance Program," January 2002, (Accession No. ML021280606).

11. TR-0-MCD-001, "Omaha Public Power District Fort Calhoun Station Unit No. 1, Evaluation of Baseline Specimens Reactor Vessel Materials Irradiation Surveillance Program," March 1977.

12. ORNL/TM-2006/530, "A Physically Based Correlation of Irradiation-Induced Transition Temperature Shifts for RPV Steels," November 2007, (Accession No. ML081000630).

13. Wesdyne ISI Report, "10 Year Reactor Vessel In-Service Inspection for Beaver Valley Unit #1 Power Station," performed in October 2007.

14. NUREG-1806, "Technical Basis for Revision of the Pressurized Thermal Shock (PTS) Screening Limit in the PTS Rule (10 CFR 50.61)," August 2007.

Attachment 1

Proposed Facility Operating License Change (Mark-Up)
(1 page follows)

APPENDIX C

ADDITIONAL CONDITIONS
OPERATING LICENSE NO. DPR-66

FirstEnergy Nuclear Operating Company and FirstEnergy Nuclear Generation, LLC shall comply with the following conditions on the schedules noted below:

Amendment Number	Additional Condition	Implementation Date
281	Initial Performance of New Surveillance and Assessment Requirements	
	Upon implementation of Amendment No. 281 adopting TSTF-448, Revision 3, the determination of control room envelope (CRE) unfiltered air inleakage as required by Surveillance Requirement (SR) 3.7.10.4, in accordance with Specification 5.5.14.c(i), the assessment of CRE habitability as required by Specification 5.5.14.c(ii), and the measurement of CRE pressure as required by Specification 5.5.14.d, shall be considered met. Following implementation: (a) The first performance of SR 3.7.10.4, in accordance with Specification 5.5.14.c(i), shall be within the specified Frequency of 6 years, plus the 18-month allowance of SR 3.0.2, as measured from the date of the most recent successful tracer gas test, or within the next 18 months if the time period since the most recent successful tracer gas test is greater than 6 years. (b) The first performance of the periodic assessment of CRE habitability, Specification 5.5.14.c(ii), shall be within 3 years, plus the 9-month allowance of SR 3.0.2, as measured from the date of the most recent successful tracer gas test, or within the next 9 months if the time period since the most recent successful tracer gas test is greater than 3 years. (c) The first performance of the periodic measurement of CRE pressure, Specification 5.5.14.d, shall be within 18 months, plus the 138 days allowed by SR 3.0.2, as measured from the date of the most recent successful pressure measurement test.	The amendment shall be implemented within 120 days from date of issuance
TBD	Alternate Fracture Toughness Requirements for Protection Against Pressurized Thermal Shock Events License Amendment No. TBD authorizes the implementation of 10 CFR 50.61a in lieu of 10 CFR 50.61.	The amendment shall be implemented within 120 days from date of issuance

Deleted: 290

Attachment 2

Proposed Facility Operating License Change (Re-Typed)
(1 page follows)

APPENDIX C

ADDITIONAL CONDITIONS
OPERATING LICENSE NO. DPR-66

FirstEnergy Nuclear Operating Company and FirstEnergy Nuclear Generation, LLC shall comply with the following conditions on the schedules noted below:

Amendment Number	Additional Condition	Implementation Date
281	Initial Performance of New Surveillance and Assessment Requirements Upon implementation of Amendment No. 281 adopting TSTF-448, Revision 3, the determination of control room envelope (CRE) unfiltered air inleakage as required by Surveillance Requirement (SR) 3.7.10.4, in accordance with Specification 5.5.14.c(i), the assessment of CRE habitability as required by Specification 5.5.14.c(ii), and the measurement of CRE pressure as required by Specification 5.5.14.d, shall be considered met. Following implementation: (a) The first performance of SR 3.7.10.4, in accordance with Specification 5.5.14.c(i), shall be within the specified Frequency of 6 years, plus the 18-month allowance of SR 3.0.2, as measured from the date of the most recent successful tracer gas test, or within the next 18 months if the time period since the most recent successful tracer gas test is greater than 6 years. (b) The first performance of the periodic assessment of CRE habitability, Specification 5.5.14.c(ii), shall be within 3 years, plus the 9-month allowance of SR 3.0.2, as measured from the date of the most recent successful tracer gas test, or within the next 9 months if the time period since the most recent successful tracer gas test is greater than 3 years. (c) The first performance of the periodic measurement of CRE pressure, Specification 5.5.14.d, shall be within 18 months, plus the 138 days allowed by SR 3.0.2, as measured from the date of the most recent successful pressure measurement test.	The amendment shall be implemented within 120 days from date of issuance
TBD	Alternate Fracture Toughness Requirements for Protection Against Pressurized Thermal Shock Events License Amendment No. TBD authorizes the implementation of 10 CFR 50.61a in lieu of 10 CFR 50.61.	The amendment shall be implemented within 120 days from date of issuance