# U.S. Nuclear Regulatory Commission

## Site-Specific SRO Written Examination

**Applicant Information**

| | |
|---|---|
| Name: | |
| Date: 06/25/13 | Facility/Unit: FARLEY Unit 1 & 2 |
| Region: I ☐ II ☒ III ☐ IV ☐ | Reactor Type: W ☒ CE ☐ BW ☐ GE ☐ |
| Start Time: | Finish Time: |

**Instructions**

Use the answer sheets provided to document your answers. Staple this cover sheet on top of the answer sheets. To pass the examination you must achieve a final grade of at least 80.00 percent overall, with 70.00 percent or better on the SRO-only items if given in conjunction with the RO exam; SRO-only exams given alone require a final grade of 80.00 percent to pass. You have 8 hours to complete the combined examination, and 3 hours if you are only taking the SRO portion.

**Applicant Certification**

All work done on this examination is my own. I have neither given nor received aid.

_____
Applicant's Signature

**Results**

| | | | | |
|---|---|---|---|---|
| RO/SRO-Only/Total Examination Values | 75 | 25 | 100 | Points |
| Applicant's Scores | _____ | _____ | _____ | Points |
| Applicant's Grade | _____ | _____ | _____ | Percent |

1. Unit 1 is operating at 85% power with the following conditions:

   - STP-33.0B, Solid State Protection System Train B Operability Test, is in progress.
   - The 'B' Reactor Trip Bypass Breaker has been racked in and closed.
   - Control Bank D is at 203 steps.
   - The Rod Control Bank Selector Switch is in AUTO.
   - PS/446Z, FIRST STG IMPULSE PRESS SEL SWITCH, is in the Channel IV / PT447 position.

   Subsequently, the following occurs:

   - PT-447, TURB FIRST STG PRESS, fails HIGH.

   Which one of the following completes the statements below?

   The control rods will _(1)_.

   If the reactor is manually tripped at this time, the 'B' Reactor Trip Bypass Breaker _(2)_ light will be LIT.

| | (1) | (2) |
|---|---|---|
| A. | insert | RED |
| B. | insert | GREEN |
| C. | withdraw | GREEN |
| D. | withdraw | RED |

2. Unit 1 is in Mode 3 and preparing to start the 1C RCP.

Which one of the following completes the statements below per SOP-1.1, Reactor Coolant System?

The 1C RCP oil lift pump handswitch white light indicates _(1)_ .

The 1C RCP breaker closing operation _(2)_ interlocked with a 2 minute time delay.

A. 1) BOTH the oil lift pressure has reached 600 psig AND 2 minutes have elapsed

2) is NOT

B. 1) ONLY that the oil lift pressure has reached 600 psig

2) IS

C. 1) ONLY that the oil lift pressure has reached 600 psig

2) is NOT

D. 1) BOTH the oil lift pressure has reached 600 psig AND 2 minutes have elapsed

2) IS

3. Unit 1 was operating at 100% power when the following occurred:

- The air supply to FCV-122, CHG FLOW REG, actuator has been severed and the valve has repositioned to its failed position.

Which ONE of the following completes the statement below?

FCV-122 is _(1)_ and RCP seal injection flow will _(2)_.

| | (1) | (2) |
|---|---|---|
| A. | CLOSED | LOWER |
| B. | CLOSED | RISE |
| C. | OPEN | LOWER |
| D. | OPEN | RISE |

4. The following conditions exist on Unit 1:

   - The operating crew is cooling down per UOP-2.2, Shutdown of Unit From Hot Standby to Cold Shutdown.
   - MODE 5 has just been entered and the following conditions exist:
     - RCS temperature is 195°F.
     - BOTH 1A AND 1B RHR pumps are running in the cooldown mode.

   Subsequently, PT-402, 1C LOOP RCS PRESS, fails HIGH.

   Which one of the following describes the **minimum** required action(s), if any, to be performed per AOP-12.0, Residual Heat Removal Malfunction?

   A. No actions are required.

   B. Secure the 1A RHR pump ONLY.

   C. Secure the 1B RHR pump ONLY.

   D. Secure BOTH 1A AND 1B RHR pumps.

5. Unit 1 was operating at 100% power when the following conditions occurred:

- A LOCA is in progress.
- The operating crew is performing the actions of EEP-0.0, Reactor Trip or Safety Injection, and is at the step to "Check RCS intact".
- RCS pressure is 475 psig and lowering.

Which one of the following describes the current status of the ECCS system?

| | SI Accumulator Level | RHR Injection Flow |
|---|---|---|
| A. | Stable and on-scale | Zero |
| B. | Dropping or off-scale low | Zero |
| C. | Dropping or off-scale low | Rising |
| D. | Stable and on-scale | Rising |

6. Unit 1 has experienced a Reactor Trip and Safety Injection due to a faulted SG. The following conditions exist:

- The operating crew is performing EEP-2.0, Faulted Steam Generator Isolation.
- SCMM is in the CETC mode.
- RCS pressure is 1900 psig and rising slowly.
- At the step for verifying SI termination criteria, the crew notes that PT-457, PRZR PRESS, has failed LOW.

Which one of the following completes the statements below?

Subcooling margin calculated by A Train ICCMS will _(1)_.

Subcooling margin calculated by B Train ICCMS will _(2)_.

| | (1) | (2) |
|---|---|---|
| A. | be affected | NOT be affected |
| B. | NOT be affected | be affected |
| C. | be affected | be affected |
| D. | NOT be affected | NOT be affected |

7. Unit 2 was operating at 2% power with a plant startup in progress per UOP-1.2, Startup of the Unit from Hot Standby to Minimum Load and the following conditions occurred:

**At 1000:**

- DG-15-2, 2B S/U XFMR TO 2G 4160V Bus, trips open.

**At 1005:**

- DF-01-2, 2A S/U XFMR TO 2F 4160V Bus, trips open.

Which one of the following completes the statements below **at 1006** with no operator actions taken?

The Reactor Trip breakers will be _(1)_.

DRPI rod bottom lights _(2)_ be LIT.

| | (1) | (2) |
|---|---|---|
| A. | OPEN | WILL |
| B. | OPEN | will NOT |
| C. | CLOSED | WILL |
| D. | CLOSED | will NOT |

8. Unit 1 is in Mode 5 and forming a pressurizer steam space (drawing a bubble) per UOP-1.1, Startup of Unit from Cold Shutdown to Hot Standby. The vacuum refill procedure will NOT be performed. The following conditions exist:

- RCS pressure is being maintained at 325-375 psig.
- 1B RCP is running.
- 'A' Train RHR is on service with low pressure letdown aligned.
- RCS is in solid plant pressure control.
- Pressurizer temperature is 178°F and slowly rising.
- All PRZR heaters have been energized.

Which one of the following completes the statements below?

Per UOP-1.1, the pressurizer is at saturation conditions when _(1)_ increases.

During this evolution, PRT level will _(2)_.

| | _(1)_ | _(2)_ |
|---|---|---|
| A. | charging flow | remain constant |
| B. | letdown flow | remain constant |
| C. | letdown flow | rise |
| D. | charging flow | rise |

9. Unit 2 was operating at 100% power when a Reactor Trip occurs and the following conditions exist:

- Q2B13PSV8010A, PZR SAFETY, has failed OPEN.
- Pressurizer pressure is 1020 psig.
- PRT pressure rises to 55 psig.
- Core Exit Thermocouples read 560°F.

Which one of the following completes the statements below?

Temperature on TI-469, SAFETY VLVS, will indicate approximately _(1)_.

Pressurizer level will be _(2)_.

**Reference provided**

| | (1) | (2) |
|---|---|---|
| A. | 546°F | rising |
| B. | 546°F | lowering |
| C. | 320°F | lowering |
| D. | 320°F | rising |

10. Unit 2 is operating at 100% power when the following occurs:

- A simultaneous dual Unit LOSP occurs:

Which one of the following completes the statement below?

The _(1)_ CCW pump is being powered by the _(2)_ DG.

| | (1) | (2) |
|---|---|---|
| A. | 2A | 1-2A |
| B. | 2A | 1C |
| C. | 2C | 1-2A |
| D. | 2C | 1C |

11. The following conditions exist on Unit 1:

- An RCS leak is in progress.
- RCS pressure is 1600 psig and stable.
- Containment pressure is 3.1 psig and slowly rising.
- The crew has just transitioned to ESP-1.2, Post LOCA Cooldown and Depressurization.

Which one of the following completes the statement below?

The **minimum** SG narrow range water level must be greater than _(1)_ to _(2)_.

A. 1) 31%

2) ensure SG tubes are covered to promote reflux boiling

B. 1) 48%

2) ensure SG tubes are covered to promote reflux boiling

C. 1) 31%

2) ensure adequate SG inventory to provide a secondary heat sink

D. 1) 48%

2) ensure adequate SG inventory to provide a secondary heat sink

12. Unit 1 was operating at 100% power when a Reactor Trip and LOSP occurred. The following conditions exist:

- The 1A PZR HTR GROUP BACKUP handswitch is in AUTO.
- RCS pressure is 2000 psig.

Which one of the following correctly describes Pressurizer Heater operation per ESP-0.1, Reactor Trip Response?

A. The 1A PZR Heaters will have power available, **NO** actions are required to energize them.

B. The 1A PZR Heaters will have power available **AND** manual actions on the MCB are required to energize them.

C. The 1A PZR Heaters will **NOT** have power available. Manual actions are required to align power to them on the EPB but **NO** other actions are required to energize them.

D. The 1A PZR Heaters will **NOT** have power available. Manual actions are required to align power to them on the EPB **AND** manual actions on the MCB are required to energize them.

13. Unit 1 has experienced a Loss of Off-site Power and a Large Break LOCA. The following conditions exist:

- ESP-1.3, Transfer to Cold Leg Recirculation, has been completed.

Subsequently, the Shift Supervisor directs the OATC to perform ESP-1.4, Transfer to Simultaneous Cold and Hot Leg Recirculation and the following occurs:

- Power is lost to the 1G 4160V Bus and will not be restored for 18 hours.

Which one of the following completes the statement below?

At the completion of ESP-1.4, the running LHSI pump will be aligned for _(1)_ leg recirculation and the running HHSI pump will be aligned for _(2)_ leg recirculation.

| | (1) | (2) |
|---|---|---|
| A. | HOT | COLD |
| B. | COLD | COLD |
| C. | HOT | HOT |
| D. | COLD | HOT |

14. Unit 1 is operating at 100% power when the 1E 4160V bus becomes de-energized due to an electrical fault.

Which one of the following completes the statement below?

Pressurizer heater groups ____ have lost their normal power supply.

A. 1C and 1D ONLY

B. 1A, 1C and 1D ONLY

C. 1B and 1E ONLY

D. 1B, 1D and 1E ONLY

15. The following conditions exist on Unit 1:

- A loss of 'A' Train Auxiliary Building 125V DC Bus has occurred.

Which one of the following completes the statement below?

Placing the MCB Reactor Trip handswitch in TRIP would ____ if they were closed.

A. open **ALL** reactor trip and bypass breakers

B. **ONLY** open the 'B' reactor trip breaker and the 'B' reactor trip bypass breaker

C. **ONLY** open the 'B' reactor trip breaker and the 'A' reactor trip bypass breaker

D. open **BOTH** reactor trip breakers but **NOT** open either reactor trip bypass breaker

16. **<u>The Integrated Plant Computer Display on the following page is provided for evaluation of this question.</u>**

Unit 1 has experienced a reactor trip and the following conditions exist:

- The operating crew is verifying the immediate operator actions per EEP-0.0, Reactor Trip or Safety Injection.
- MLB-1, 1-1 and 11-1, SAFETY INJECTION, are NOT LIT.

The STA reports the following indications on the Plant Computer:

- PT0455 PRESSURIZER PRESSURE CHAN 1 is 1841 psig.
- PT0456 PRESSURIZER PRESSURE CHAN 2 is 1855 psig.
- PT0457 PRESSURIZER PRESSURE CHAN 3 is 1845 psig.
- PT0444A PRESSURIZER PRESSURE CHAN 4 is 1857 psig.
- PT0445A PRESSURIZER PRESSURE CHAN 5 is 1855 psig.
- PT0464 STEAM HEADER PRESSURE is 6.4 psig.

Which one of the following completes the statements below?

A Safety Injection _(1)_ required.

MSIV-3370A, B and C _(2)_ OPEN.

**Reference Provided**

| | (1) | (2) |
|---|---|---|
| A. | IS | are NOT |
| B. | IS | ARE |
| C. | is NOT | are NOT |
| D. | is NOT | ARE |

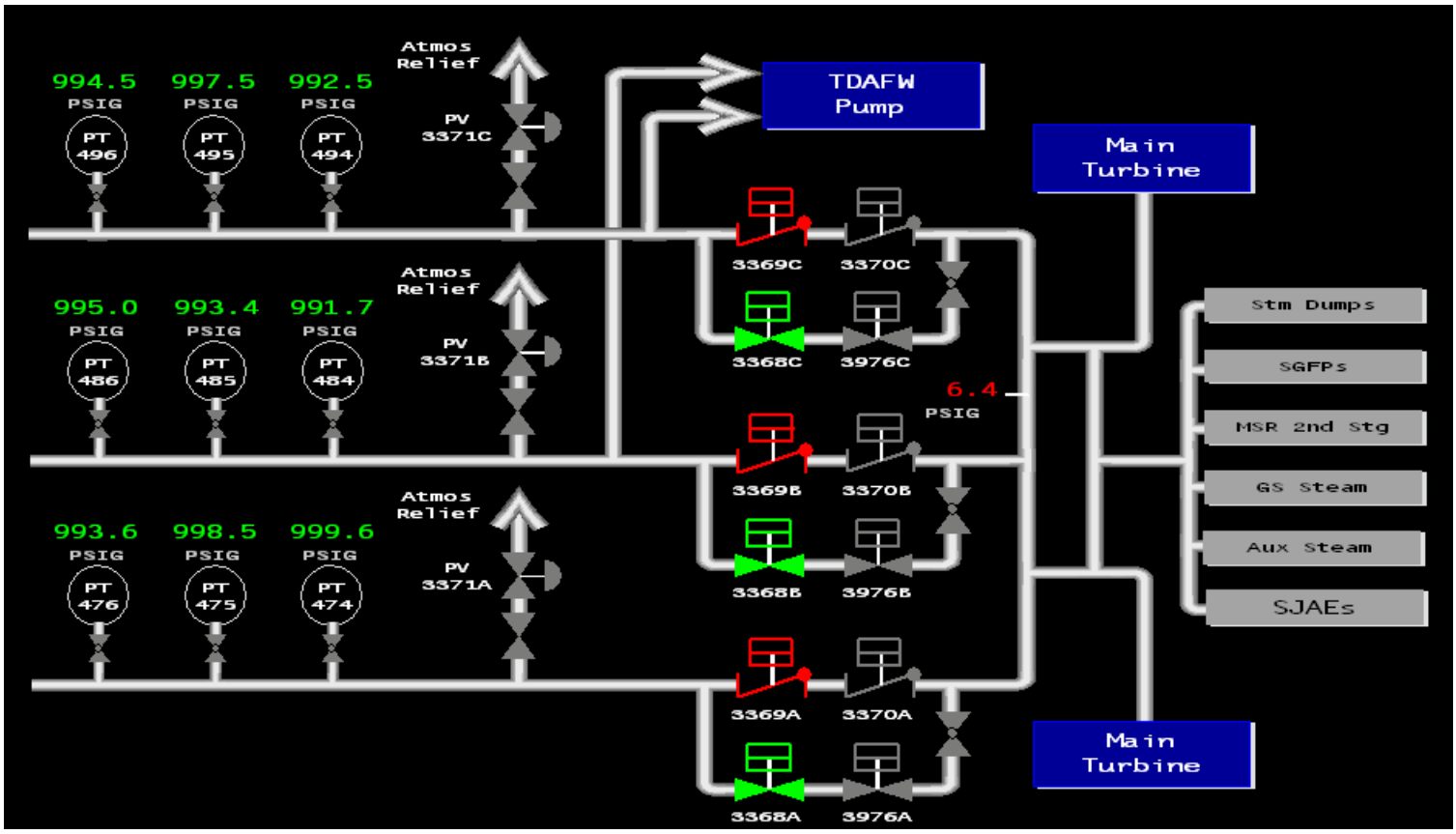
994.5
PSIG
997.5
PSIG
992.5
PSIG
PT 496
PT 495
PT 494
Atmos Relief
PV 3371C
995.0
PSIG
993.4
PSIG
991.7
PSIG
PT 486
PT 485
PT 484
Atmos Relief
PV 3371B
993.6
PSIG
998.5
PSIG
999.6
PSIG
PT 476
PT 475
PT 474
Atmos Relief
PV 3371A
TDAFW Pump
Main Turbine
3369C
3370C
3368C
3976C
6.4
PSIG
3369B
3370B
3368B
3976B
3369A
3370A
3368A
3976A
Main Turbine
Stm Dumps
SGFPs
MSR 2nd Stg
GS Steam
Aux Steam
SJAEs

17. Unit 1 is performing a reactor startup per UOP-1.2, Startup Of Unit From Hot Standby To Minimum Load, when the following conditions occurred:

- The OATC pulled Control Bank D to 100 Steps by Step Demand Counter.
- Rod B8 was noted to be indicating 54 Steps by DRPI.

Which one of the following completes the statements below?

Rod B8's position is _(1)_ .

Per Tech Spec Bases 3.1.7, Rod Position Indication, _(2)_ is(are) the most reliable indication.

A. 1) exactly 100 steps

2) the group step counters

B. 1) approximately 100 steps

2) the group step counters

C. 1) exactly 54 steps

2) DRPI

D. 1) approximately 54 steps

2) DRPI

18. Unit 1 is operating at 100% power.

The following occurs:

- MOV-3052, CCW TO RCP CLRS, closes.
- DD3, CCW FLOW FROM RCP OIL CLRS LO, comes in to alarm.

Which one of the following completes the statements below?

The most limiting components for this event are the RCP __(1)__.

The RCPs will be required to be stopped within approximately __(2)__.

A. 1) Motor Bearings

2) 2 minutes

B. 1) Motor Bearings

2) 60 minutes

C. 1) Pump Lower Radial Bearings

2) 2 minutes

D. 1) Pump Lower Radial Bearings

2) 60 minutes

19. Unit 1 has experienced a Reactor Trip and SI due to a LOCA and the following conditions exist:

- The operators have transitioned to EEP-1.0, Loss of Reactor or Secondary Coolant.
- The Core Exit Thermocouples (CETCs) are reading as follows:
  - TWO CETCs are indicating a SHORT circuit.
  - THREE CETCs are 1204°F and rising.
  - All other CETCs are reading between 950°F and 1150°F and rising.

Which one of the following completes the statements below?

The indication for the SHORT circuited CETCs fail _(1)_.

The _(2)_ CETC is used to evaluate entry into FRP-C.2, Response To Degraded Core Cooling.

| | (1) | (2) |
|---|---|---|
| A. | HIGH | hottest |
| B. | HIGH | 5th hottest |
| C. | LOW | hottest |
| D. | LOW | 5th hottest |

20. Unit 1 is operating at 100% power with the following conditions:

**At 1000:**

- Containment Pressure is 0 psig.
- Containment temperature is 100°F.
- MI-3319A, B, C and D, CTMT CLR SUPP AIR MOISTURE, indicate 72 Dewpoint °F.
- Containment Coolers are running in slow speed.

**At 1015:**

A LOCA occurs and the following conditions exist:

- Containment Pressure is 5 psig.
- Containment temperature is 150°F.
- MI-3319A, B, C and D, CTMT CLR SUPP AIR MOISTURE, indicate 130 Dewpoint °F.

Which one of the following completes the statements below at **1015**?

The Containment Cooler discharge will be through the _(1)_.

The Containment Cooler fans will be drawing _(2)_ amps than at 1000.

| | (1) | (2) |
|---|---|---|
| A. | ductwork | MORE |
| B. | dropout plate | MORE |
| C. | ductwork | LESS |
| D. | dropout plate | LESS |

21. Unit 1 is operating at 100% power and the following conditions exist:

- AOP-16.0, CVCS Malfunction, has just been exited after a charging flow controller failure.
- FK-122, CHG FLOW, is in MANUAL and has been repaired.

Subsequently, FK-122 is placed in AUTOMATIC and the following conditions exist:

- One 60 gpm orifice is on service.
- Charging flow is stable at 62 gpm.

Which one of the following completes the statement below?

If FK-122 were to go to minimum demand, charging flow would decrease to a **minimum** flow rate of _(1)_ , which is designed to prevent _(2)_.

A. 1) 18 gpm

2) flashing downstream of the letdown orifices

B. 1) 18 gpm

2) overheating of the charging pumps

C. 1) 40 gpm

2) flashing downstream of the letdown orifices

D. 1) 40 gpm

2) overheating of the charging pumps

22. Unit 1 is operating at 100% power when a Steam Break occurs on 1B SG and the following conditions exist:

- EE5, CTMT ISO PH B, is in alarm.
- All Phase B automatic actions have occurred.

Which one of the following completes the statements below?

CCW to the RCP Thermal Barrier Heat Exchanger _(1)_ isolated.

Seal Injection _(2)_ isolated.

| | (1) | (2) |
|---|---|---|
| A. | IS | is NOT |
| B. | is NOT | is NOT |
| C. | IS | IS |
| D. | is NOT | IS |

23. Unit 1 is in Mode 5 with the following conditions:

- 1B RHR pump is tagged out.
- All SG Wide Range levels are 84%.
- Pzr level is being maintained at 21% on LI-462, PRZR LVL.
- RCS temperature is 155°F.
- RCS pressure is 325 psig.
- All RCP's are secured.
- 1A RHR pump is running in the cooldown lineup.

Subsequently, the following occurs:

- 1A RHR pump trips on overcurrent and cannot be restarted.
- RCS temperature is 175°F and slowly rising.

Which one of the following completes the statements below?

Per AOP-12.0, Residual Heat Removal System Malfunction, the preferred method to re-establish core cooling is to establish _(1)_.
Core cooling is monitored using _(2)_.

| | (1) | (2) |
|---|---|---|
| A. | feed and bleed | RCS cold leg temperatures |
| B. | a secondary heat sink | RCS cold leg temperatures |
| C. | feed and bleed | CETCs |
| D. | a secondary heat sink | CETCs |

24. Unit 1 is operating at 100% power when the following occurs:

- A leak develops in the CCW system.
- CCW Surge Tank level is slowly lowering.
- AA4 and AB4, CCW SRG TK LVL A(B) TRN HI-LO, are in alarm.
- AA5, CCW SRG TK LVL A TRN LO-LO, has come into alarm.

Which one of the following completes the statements below?

CCW system automatic isolations are designed to occur at _(1)_ in the CCW Surge Tank.

Using the NORMAL source of makeup water, the operator will open _(2)_ to make up to the CCW Surge Tank.

| | (1) | (2) |
|---|---|---|
| A. | 35 inches | MOV-3031A, MKUP TO CCW FROM RMW |
| B. | 20 inches | MOV-3031A, MKUP TO CCW FROM RMW |
| C. | 35 inches | MOV-3030A, MKUP TO CCW FROM DW STOR TK |
| D. | 20 inches | MOV-3030A, MKUP TO CCW FROM DW STOR TK |

25. Unit 2 is operating at 50% power when a simultaneous Dual Unit LOSP occurs.

- 4160V Bus 2G remains de-energized due to the DG not starting for that emergency bus.

Three (3) minutes after the LOSP, a Large Break LOCA occurs on Unit 2.

- Containment pressure peaked at 29 psig and is trending down.

Which one of the following completes the statement below?

The _(1)_ Containment Spray pump is currently running and is powered from the _(2)_ DG.

| | (1) | (2) |
|---|---|---|
| A. | 2A | 1C |
| B. | 2B | 1C |
| C. | 2A | 1-2A |
| D. | 2B | 1-2A |

26. Unit 2 plant conditions are as follows:

- Containment Main Purge system is running.
- Containment radiation levels are **rising**.

Subsequently, R-24A, CTMT PURGE, loses control power.

Which one of the following completes the statements below?

Radiation levels _(1)_ stop rising in the Main Exhaust Plenum.

CTMT Main Purge supply and exhaust fans _(2)_ trip.

| | (1) | (2) |
|---|---|---|
| A. | WILL | will NOT |
| B. | will NOT | will NOT |
| C. | WILL | WILL |
| D. | will NOT | WILL |

27. Unit 1 is operating at 100% power and the following conditions exist:

- A blended make-up to the Spent Fuel Pool (SFP) is occurring.
- A calibration error results in FT-168, PRI WATER MKUP FLOW, providing a flow input to the Reactor Makeup System that is **less** than the actual flowrate.

Which one of the following completes the statements below?

The blended flow makeup resulted in a _(1)_ of the SFP.

Per Tech Spec 3.7.14, Fuel Storage Pool Boron Concentration, the MINIMUM required SFP boron concentration is _(2)_ ppm.

| | (1) | (2) |
|---|---|---|
| A. | boration | 2000 |
| B. | boration | 2200 |
| C. | dilution | 2000 |
| D. | dilution | 2200 |

28. Unit 1 is operating at 100% power with the following conditions:

- Reactor power is now 100.5% and slowly rising.
- Tavg is 570.5°F and slowly lowering.
- Pressurizer pressure is 2210 psig and slowly lowering.
- Turbine load is 890 MWe and lowering.
- SG pressures are 720 psig and slowly lowering.
- Containment pressure is 2.1 psig and slowly rising.

Which one of the following completes the statements below?

The event in progress is a _(1)_ line break.

Per AOP-14.0, Secondary System Leakage, the operators are required to _(2)_.

| | (1) | (2) |
|---|---|---|
| A. | steam | reduce turbine load |
| B. | steam | trip the reactor |
| C. | feed | reduce turbine load |
| D. | feed | trip the reactor |

29. Unit 1 is operating at 100%. A fuel shuffle is being performed in the Unit 1 SFP.

**At 1000:**

- EH2, SFP LVL HI-LO, is in alarm.
- SFP level is 153' 3" and stable.

**At 1015:**

The SRO in charge of refueling reports that a fuel assembly has been dropped.

- FH5, SFP AREA RE-25 A OR B HI RAD, is in alarm.
- R-25A & B, SPENT FUEL BLDG EXH, reads off scale high.

Which one of the following completes the statements below?

The operating crew is required to enter _(1)_ .

The crew is required to dispatch personnel to _(2)_ per the applicable AOP.

Procedure titles are as follows:

AOP-30.0, Refueling Accident
AOP-49.3, Spent Fuel Pool Emergency

| | (1) | (2) |
|---|---|---|
| A. | AOP-49.3 | make up to the SFP using the RWST |
| B. | AOP-30.0 | make up to the SFP using the RWST |
| C. | AOP-49.3 | ensure all SFP hatches and doors are closed |
| D. | AOP-30.0 | ensure all SFP hatches and doors are closed |

30. Unit 1 is performing the actions of AOP-2.0, Steam Generator Tube Leakage, due to a tube leak on the 1A SG. The following conditions exist:

- RCS pressure is currently being reduced to minimize break flow.

The following parameters are observed:

- SG pressures are:

| 1A SG | 1B SG | 1C SG |
|---|---|---|
| 948 psig | 905 psig | 900 psig |

  - RCS pressure is 916 psig.
  - The highest reading non-upperhead CETC is 518°F.
  - PRZR level is 43%.

- BOTH Subcooled Margin Monitors are malfunctioning.

Which one of the following completes the statements below?

The current value of subcooling is approximately _(1)_.

The RCS pressure reduction _(2)_ required to be stopped.

**Reference Provided**

| | (1) | (2) |
|---|---|---|
| A. | 22°F | IS |
| B. | 22°F | is NOT |
| C. | 18°F | IS |
| D. | 18°F | is NOT |

31. Unit 1 has experienced a tube rupture on the 1C SG.

The operating crew is at the step in EEP-3.0, Steam Generator Tube Rupture, to "Check SI termination criteria."

- The following plant conditions are observed:
  - RCS Subcooling is 22°F and slowly rising.
  - RCS pressure is 950 psig and slowly rising.
  - Pressurizer level is 45% and slowly rising.
  - AFW flow is 450 gpm.
  - 1A SG NR level is 29% and slowly rising.
  - 1B SG NR level is 26% and slowly rising.
  - 1C SG NR level is 65% and rising rapidly.

Which one of the following completes the statements below?

SI termination criteria _(1)_ been met.

Per EEP-3.0, SI termination is necessary to prevent overfilling the _(2)_.

| | (1) | (2) |
|---|---|---|
| A. | has NOT | Steam Generator |
| B. | has NOT | Pressurizer |
| C. | HAS | Steam Generator |
| D. | HAS | Pressurizer |

32. Concerning R-70A/B/C, 1A/1B/1C SG TUBE LEAK DET, on Unit 1:

Which one of the following completes the statements below?

The R-70s are located _(1)_ of the MSIVs.
A minimum reactor power level that the R-70s can accurately estimate a SG leak rate is _(2)_ .

| | (1) | (2) |
|---|---|---|
| A. | upstream | 25% |
| B. | downstream | 25% |
| C. | upstream | 10% |
| D. | downstream | 10% |

33. Which one of the following coincidences will cause an anticipated transient without trip (ATWT) mitigation system actuation circuitry (AMSAC) Main Turbine Trip?

_(1)_ Turbine impulse pressure channels > 40%

**AND**

_(2)_ SG NR levels < 10% for > 25 seconds.

| | (1) | (2) |
|---|---|---|
| A. | 1 of 2 | 2 of 3 |
| B. | 2 of 2 | 2 of 3 |
| C. | 1 of 2 | 1 of 3 |
| D. | 2 of 2 | 1 of 3 |

34. Unit 1 is operating at 40% power when PR-4029, CONDENSER PRESSURE indicates as follows:

- PT0501 and PT0502 are 6 psia and rising rapidly.

Subsequently, Condenser pressure stabilizes at 12 psia.

Which one of the following completes the statements below?

The Steam Dump _(1)_ controller is enabled.

The Steam Dumps are _(2)_ .

| | (1) | (2) |
|---|---|---|
| A. | Plant Trip | CLOSED |
| B. | Plant Trip | OPEN |
| C. | Loss of Load | CLOSED |
| D. | Loss of Load | OPEN |

35. Unit 1 is operating at 4% power. The following conditions exist:

- 1A SGFP is running.
- All SG NR levels are in the programmed band.
- FCV-479/489/499,1A/1B/1C SG FW BYP FLOW, controllers are in MANUAL and 35% open.

Subsequently, the 1A SGFP trips.

Which one of the following completes the statements below?

MOV-3232A/B/C, MAIN FW TO 1A/1B/C SG, will _(1)_.

FCV-479/489/499,1A/1B/1C SG FEED FLOW BYPASS FCVs, will _(2)_.

| | (1) | (2) |
|---|---|---|
| A. | remain OPEN | remain OPEN |
| B. | remain OPEN | CLOSE |
| C. | CLOSE | remain OPEN |
| D. | CLOSE | CLOSE |

36. Unit 1 is at 70% power with the following conditions:

- **R-15A, SJAE EXH**, is in alarm.
- **R-15B, TURB BLDG VNTL**, is in alarm.
- AOP-2.0, Steam Generator Tube Leakage, is in progress.
- The Turbine Building SO has placed the SJAE Filtration System in service.

Which one of the following completes the statement below?

After the SJAE Filtration system is placed in service, the reading on **R-15B** will _(1)_ and the SJAE Filtration system will _(2)_ .

| | (1) | (2) |
|---|---|---|
| A. | decrease | be aligned in a recirc alignment |
| B. | remain the same | be aligned in a recirc alignment |
| C. | decrease | discharge to the Turbine Bldg roof |
| D. | remain the same | discharge to the Turbine Bldg roof |

37. Unit 1 is operating at 100% when a LOSP occurred. The following conditions exist:

- The Emergency Diesel Generators failed to energize the ESF busses.
- The operating crew is conducting a secondary depressurization per ECP-0.0, Loss Of All AC Power.
- SG pressures are as follows:
  - 1A SG: 245 psig and lowering
  - 1B SG: 247 psig and lowering
  - 1C SG: 244 psig and lowering

Which one of the following completes the statements below?

Per ECP-0.0, this secondary pressure reduction is required to _(1)_.

The reason the secondary pressure reduction is required to be stopped at the SG pressure specified in ECP-0.0 is to prevent _(2)_.

| | (1) | (2) |
|---|---|---|
| A. | be STOPPED | injection of accumulator nitrogen into the RCS |
| B. | CONTINUE | injection of accumulator nitrogen into the RCS |
| C. | be STOPPED | a challenge to the Integrity Critical Safety Function |
| D. | CONTINUE | a challenge to the Integrity Critical Safety Function |

38. Unit 1 is operating at 100% power when the 1B SGFP trips.

Which one of the following completes the statements below for the 1B SGFP?

The HIGH PRESS. GOV. VALVE CLOSED light is _(1)_ .
The LOW PRESS. GOV. VALVE CLOSED light is _(2)_ .

| | (1) | (2) |
|---|---|---|
| A. | LIT | LIT |
| B. | LIT | NOT lit |
| C. | NOT lit | LIT |
| D. | NOT lit | NOT lit |

39. Unit 2 is operating at 100% power when a SG tube leak occurs.

Which one of the following completes the statement below?

When R-23A, SGBD HX OUTLET, alarms, it will cause _____ , to automatically close.

A. HV-7614A/B/C, 2A/B/C SGBD ISO

B. FCV-1152, SGB INLET STOP VALVE

C. RCV-023B, SGBD DISCH TO ENVIRONMENT

D. HV-7697A/B, 7698A/B and 7699A/B, 2A/B/C SGBD ISO

40. Unit 1 is operating at 33% power and the following conditions exist:

- 1A and 1B Condensate pumps are running.
- 1C Condensate pump is in OFF with a CAUTION TAG that says, "EMERGENCY USE ONLY."
- 1A SGFP is running.

Subsequently, the 1B Condensate pump trips and the following conditions are observed:

KB4, SGFP SUCTION PRESS LOW, comes into alarm and the operating crew observes the following on PR4039, SGFP SUCT PRESS:

| Time | | | | |
|---|---|---|---|---|
| 0 sec | 10 sec | 20 sec | 30 sec | 40 sec |
| 300 psig | 275 psig | 265 psig | 270 psig | 285 psig |

**At time 20 seconds,** the 1C condensate pump was started.

Which one of the following completes the statements below?

**At time 30 seconds**, the 1A SGFP _(1)_ be tripped.

The operating crew is required to _(2)_.

A. 1) will NOT

2) rapidly reduce Turbine load using AOP-17.1, Rapid Turbine Power Reduction

B. 1) will NOT

2) check SGFP suction pressure stabilizes

C. 1) WILL

2) trip the Reactor and enter EEP-0.0, Reactor Trip or Safety Injection.

D. 1) WILL

2) trip the Main Turbine and enter AOP-3.0, Turbine Trip Below P-9 Setpoint.

41. Unit 1 is in Mode 3 with the following conditions:

- 1A MDAFW pump was started per UOP-1.2, Startup of Unit From Cold Shutdown to Hot Standby.
- There are no other AFW pumps running.
- All SG NR levels are 65%.

Subsequently, power is lost to the 1A Startup Transformer.

Which one of the following completes the statements below?

The TDAFW Pump _(1)_ be running.

Total design AFW flow rate will be approximately _(2)_ gpm.

| | (1) | (2) |
|---|---|---|
| A. | will NOT | 350 |
| B. | will NOT | 700 |
| C. | WILL | 700 |
| D. | WILL | 1050 |

42. Unit 1 was operating at 100% power when a Reactor Trip occurred and the following conditions exist:

- ESP-0.1, Reactor Trip Response, has just been entered.
- Pressurizer level is 12% and slowly lowering.
- SG NR levels are 40% and slowly rising.
- Tavg is 534°F and slowly lowering.
- RCS pressure is 2050 psig and slowly lowering.

Which one of the following actions will be performed FIRST as required by ESP-0.1 to address the cooldown?

A. Minimize total AFW flow.

B. Emergency borate the RCS.

C. Close all MSIVs and MSIV Bypass Valves.

D. Manually initiate SI and return to EEP-0.0, Reactor Trip or Safety Injection.

43. Unit 2 is operating at 100% power. The following conditions exist:

- SGBD is on service.
- #1 WMT release is in progress.
- The service water pond level has dropped to 179 feet, 10 inches.

Which one of the following combinations predicts the plant response to the change in pond level?

A. 1) SW Dilution Flow on FR-4107, SW DILUTION FLOW, will lower;

2) RCV-023B, SGBD DISCH TO ENVIRONMENT, will automatically close.

B. 1) SW Dilution Flow on FR-4107, SW DILUTION FLOW, will lower;

2) RCV-018, WMT DISCH TO ENVIRONMENT, will automatically close.

C. 1) SW Pressure on PI-3001A & B, SW TO CCW HX HDR PRESS, will lower;

2) PCV-562 and 563, TRN B (A) DILUTION BYPASS PCV, will fully open.

D. 1) SW Pressure on PI-3001A & B, SW TO CCW HX HDR PRESS, will lower;

2) MOV-538 and 539, SW B (A) HDR EMERG RECIRC TO POND, will fully open.

44. The following conditions exist on Unit 2:

- DG02-2, 2G 4160 V bus tie to 2L 4160 V bus, has tripped opened.

Which one of the following completes the statement below?

The ____ has lost Service Water cooling.

A. 2C Instrument Air Compressor

B. 2C Reactor Coolant Pump Motor Air Cooler

C. 2C Component Cooling Water Heat Exchanger

D. Steam Generator Blowdown Heat Exchanger

45. Unit 1 has experienced a Reactor trip with the following conditions:

- A Loss of All AC has occurred.
- ECP-0.0, Loss of All AC Power, is in progress.

Which one of the following completes the statements below?

The 1B Aux Building DC bus voltage will __(1)__.

Per ECP-0.0, there may not be enough DC capacity to start a DG and sequence needed loads if power is not restored to the 125V DC battery chargers on each train within a MINIMUM of __(2)__.

A. 1) drop slowly at first; then later drop rapidly as the battery nears exhaustion

2) 30 min

B. 1) drop slowly at first; then later drop rapidly as the battery nears exhaustion

2) 90 min

C. 1) drop at a constant, linear rate the entire time the battery discharges

2) 30 min

D. 1) drop at a constant, linear rate the entire time the battery discharges

2) 90 min

46. A loss of all AC power has occurred on Unit 1 and the following conditions exist:

- VA2, 1B DG GEN FAULT TRIP, has come into alarm.
- The crew has completed the step in ECP-0.0, Loss Of All AC Power, to verify breakers for major loads OPEN.
- A Safety Injection occurs on Unit 1 at this time.

Which one of the following completes the statements below?

The 2C DG will be started from the EPB in _(1)_ using the START pushbutton.

All ESF loads will _(2)_.

A. 1) Mode 2

2) automatically start

B. 1) Mode 2

2) have to be manually aligned

C. 1) Mode 1

2) automatically start

D. 1) Mode 1

2) have to be manually aligned

47. Unit 1 is operating at 100% power with the following conditions:

- A problem with 1B DG starting air system has occurred.
- The B Air receiver has been tagged out.

Which one of the following completes the statement below?

A MINIMUM of _(1)_ psig must be available in the remaining air receiver to ensure five (5) start attempts are available.

1B DG's required minimum time to reach rated speed and voltage is _(2)_ seconds after receiving an emergency start signal.

| | (1) | (2) |
|---|---|---|
| A. | 200 | 7 |
| B. | 200 | 12 |
| C. | 350 | 7 |
| D. | 350 | 12 |

48. Unit 1 was operating at 100% power when the following occurred:

- A complete loss of instrument air caused an automatic Reactor Trip.

The following conditions exist:

- All AFW pumps are running.
- All SG NR Levels are 25% and rising.
- The Shift Supervisor has directed AFW flow to be reduced.

Per AOP-6.0, Loss of Instrument Air, which one of the following methods below will be successful in reducing AFW flow?

Valve nomenclature:
- HV-3228A / B / C, TDAFWP TO 1A/1B/1C SG
- MOV-3764A / D / F, MDAFWP TO 1A/1B/1C SG ISO
- MOV-3350A / B / C, AFW TO 1A/1B/1C SG STOP VLV

A. Place BOTH MDAFW pump MCB hand switches in the STOP position and release them.

B. Throttle HV-3228A / B / C on the MCB.

C. Close MOV-3764A / D / F on the BOP.

D. Close MOV-3350A / B / C on the MCB.

49. There is a fire in the Control Room and the following conditions exist for Unit 1:

- FNP-1-AOP-28.2, Fire In The Control Room, has been entered.

Which one of the following completes the statements below?

During the conduct of AOP-28.2, the Diesel Generators are required to be placed in _(1)_ and the output breakers _(2)_ automatically close when the DGs are started after a Loss of Offsite Power.

| | (1) | (2) |
|---|---|---|
| A. | MODE 3 | WILL |
| B. | MODE 3 | will NOT |
| C. | MODE 4 | WILL |
| D. | MODE 4 | will NOT |

50. Unit 1 is operating at 100% power with the following conditions:

- The 1A Waste Gas Compressor is running and aligned to #7 WGDT.
- R-13, WGC SUCT, alarms.

Subsequently, the #7 WGDT relief valve lifts and fails to reseat.

Which one of the following completes the statements below?

R-22, VENT STACK GAS, _(1)_ trend up.

#7 WGDT relief valve _(2)_ be manually isolated.

| | (1) | (2) |
|---|---|---|
| A. | WILL | CANNOT |
| B. | WILL | CAN |
| C. | will NOT | CANNOT |
| D. | will NOT | CAN |

51. Unit 1 is operating at 100% when the following condition occurs:

- R-19, SGBD SAMPLE, fails HIGH.

Which one of the following completes the statements below?

_(1)_ valves will automatically close.

Per SOP-45.0, Radiation Monitoring System, the actions required to allow the Shift Chemist to obtain a sample of the SGs is to _(2)_ .

A. 1) HV-3328, HV-3329 AND HV-3330, STEAM GEN 1A/1B/1C SAMPLE ISO,

2) pull the INSTRUMENT power fuses for R-19

B. 1) HV-3328, HV-3329 AND HV-3330, STEAM GEN 1A/1B/1C SAMPLE ISO,

2) place R-19 Operations Selector Switch to the RESET position

C. 1) HV-3179A, 3180A, AND 3181A, STEAM GEN 1A/1B/1C LOWER BLOWDOWN,

2) pull the INSTRUMENT power fuses for R-19

D. 1) HV-3179A, 3180A, AND 3181A, STEAM GEN 1A/1B/1C LOWER BLOWDOWN,

2) place R-19 Operations Selector Switch to the RESET position

52. Unit 1 is operating at 100% power.

Which one of the following meets the **MINIMUM** reactor coolant leakage detection system(s) that must be in operation and OPERABLE to prevent entering a REQUIRED ACTION STATEMENT of Tech Spec 3.4.15, RCS Leakage Detection Instrumentation?

- R-11 - CTMT PARTICULATE
- R-12 - CTMT GAS
- Containment Air Cooler Condensate Level Monitoring System (CACCLMS)

A. R-11 ONLY

B. R-11 AND R-12

C. The CACCLMS ONLY

D. R-12 AND the CACCLMS

53. Unit 1 has been operating at 100% power and the Gross Failed Fuel Detector (GFFD) has been steady at 2000 cpm during the entire fuel cycle.

**At 1000:**

- FG5, GFFD SYS TRBL, has just come into alarm.

**At 1015:**

- A Reactor Trip and Safety Injection occurs.

Which one of the following completes the statements below?

The **minimum** GFFD reading that would cause FG5 to come into alarm is _(1)_ above background.

**At 1020**, flow through the GFFD _(2)_ be isolated.

| | (1) | (2) |
|---|---|---|
| A. | $1 \times 10^4$ cpm | will NOT |
| B. | $1 \times 10^4$ cpm | WILL |
| C. | $1 \times 10^5$ cpm | will NOT |
| D. | $1 \times 10^5$ cpm | WILL |

54. Unit 1 is stable in Mode 3 following a Reactor Trip when the following conditions occur:

- Power has been lost to 4160V AC buses G, J, and L.

Which one of the following lists the valves that the OATC can close from the MCB to isolate a Service Water rupture in the Turbine Building?

Q1P16V514, SW TO TURB BLDG ISO B TRN
Q1P16V515, SW TO TURB BLDG ISO A TRN
Q1P16V516, SW TO TURB BLDG ISO A TRN
Q1P16V517, SW TO TURB BLDG ISO B TRN

A. MOVs 514 and 517

B. MOVs 514 and 516

C. MOVs 515 and 517

D. MOVs 515 and 516

55. Unit 1 is operating at 100% power with the following conditions:

- 1A Containment Cooler is isolated per SOP-12.1, Containment Air Cooling System.
- The following valves are closed with power available:
  - MOV-3019A, SW TO 1A CTMT CLR AND CTMT FPS
  - MOV-3441A, SW FROM 1A CTMT CLR
  - MOV-3024A, EMERG SW FROM 1A CTMT CLR
- MOV-3023A, 1A CTMT CLR SW DISCH, is OPEN.

Subsequently, a steam break occurs and containment pressure rises to 5 psig.

Which one of the following completes the statement below?

1A Containment Cooler service water flow will be _____.

A. 0 gpm

B. approximately 600 gpm

C. approximately 800 gpm

D. approximately 2000 gpm

56. Unit 1 is at 100% power with the following conditions:

- 1B DG is running for STP-80.1, Diesel Generator 1B Operability Test.
- The 1B DG is currently loaded to 1 MW.
- DG01, 1B S/U XFMR TO 1G 4160 V BUS, breaker is CLOSED.

Subsequently, the following occurs:

- WE2, 1F, 4KV BUS OV-OR-UV OR LOSS OF DC, and VE2, 1G, 4KV BUS OV-OR-UV OR LOSS OF DC, come into alarm.
- 1F and 1G 4160V bus voltages are reading 3825 volts.
- The crew has entered AOP-5.2, Degraded Grid.

Per AOP-5.2, which one of the following completes the statements below?

The 1B DG _(1)_.

The reason for the above action is _(2)_.

A. 1) is required to be secured and aligned for AUTO START

2) because this places the 1B DG is in the most reliable condition

B. 1) is required to be secured and aligned for AUTO START

2) because the LOSP Sequencer will not run LOSP loads if DG01 opens with 1B DG output breaker aligned to 1G 4160V bus

C. 1) load is required to be raised to FULL LOAD and DG01 opened

2) to ensure adequate voltage for safety related equipment

D. 1) load is required to be raised to FULL LOAD and DG01 opened

2) to prevent extended low load operation which would result in the buildup of combustion products in the engine exhausts

57. The following conditions exist on Unit 1:

- A rupture in the Instrument Air system has occurred.
- Instrument Air header pressure is 65 psig and lowering slowly.

Which one of the following completes the statements below?

V-902, AIR DRYER AUTO BYP, will be _(1)_ .

V-904, NON-ESSENTIAL IA HDR AUTO ISO, will be _(2)_ .

| | (1) | (2) |
|---|---|---|
| A. | OPEN | OPEN |
| B. | OPEN | CLOSED |
| C. | CLOSED | OPEN |
| D. | CLOSED | CLOSED |

58. The following plant conditions exist on Unit 1:

- The Reactor has been tripped due to loss of Instrument Air.
- The operating crew is performing the actions of ESP-0.1, Reactor Trip Response.
- SG Atmospheric Relief Valves (ARVs) are aligned per SOP-62.0, Emergency Air System.

Subsequently, the operator applies 18 psig to the valve actuator for PCV-3371A, 1A MS ATMOS REL VLV.

Which one of the following completes the statements below?

PCV-3371A _(1)_ open.

If PCV-3371A were fully open, _(2)_.

A. 1) IS

2) a High Steam Flow - Lo Lo Tavg Main Steam Isolation may occur

B. 1) IS

2) Technical Specification cooldown limits may be exceeded

C. 1) is NOT

2) a High Steam Flow - Lo Lo Tavg Main Steam Isolation may occur

D. 1) is NOT

2) Technical Specification cooldown limits may be exceeded

59. Unit 1 has experienced a large break LOCA and the following conditions exist:

- PT-953, CTMT PRESS has reached the PHASE B setpoint.

Which one of the following completes the statement below?

A MINIMUM of _(1)_ OR _(2)_ PHASE B CTMT ISO CS ACTUATION handswitch(es) is(are) required to actuate a Phase B isolation.

A. 1) 1 additional Containment pressure channel reaching 16.2 psig

   2) TWO

B. 1) 2 additional Containment pressure channels reaching 16.2 psig

   2) ONE

C. 1) 1 additional Containment pressure channel reaching 27 psig

   2) TWO

D. 1) 2 additional Containment pressure channels reaching 27 psig

   2) ONE

60. The electronic log is malfunctioning. The control room has shifted to manual logs and the following entries have been made:

1000 Q1E21V061A, HHSI to 1C RCS loop CL iso, as left position; 1.5 turns OPEN.
1012 Started 1B CCW Pump.

**At 1030:**

- The OATC recognizes that an error was made on the 1000 log entry.
- Q1E21V061A should have been logged as throttled to 1.25 turns OPEN.

Per SOP-0.11, Watch Station Tours and Operator Logs, the OATC is required to correct the 1000 log entry by which one of the following methods?

A. • Circle the incorrect entry in red.

• Enter the correct information next to the incorrect information and record the date and initial.

B. • Circle the incorrect entry in red.

• At 1030 make a log entry with the correct information and designate it as a LATE ENTRY.

C. • Draw a single line through the incorrect entry.

• Enter the correct information next to the incorrect information and record the date and initial.

D. • Draw a single line through the incorrect entry.

• At 1030 make a log entry with the correct information and designate it as a LATE ENTRY.

61. Both Units are operating at 100% power with the following conditions:

- A non-licensed Fire Protection Administrator who is qualified as a Shift Communicator is on shift. Note: The FPA is the designated Shift Communicator.

Which one of the following completes the statements below?

Per EIP-0.0, Emergency Organization, a **minimum** of _(1)_ licensed Plant Operators is required to staff the shift.

The **maximum** number of hours that a Plant Operator may work in any 24 hour period is _(2)_ per NMP-AD-016-003, Scheduling and Calculating Work Hours.

| | (1) | (2) |
|---|---|---|
| A. | 3 | 12 |
| B. | 3 | 16 |
| C. | 4 | 12 |
| D. | 4 | 16 |

62. Unit 1 is operating at 100% power when the following occurs:

- STP-4.1, 1A Charging Pump Quarterly Inservice Test, is in progress.
- 1A Charging pump failed to start when the handswitch was taken to START.

Which one of the following are the required actions per SOP-0.0, General Instructions to Operations Personnel?

A. Obtain Shift Manager's permission, THEN take the handswitch to START a second time.

B. Take the handswitch to START a second time, THEN write a Condition Report to document the action.

C. Write a condition report documenting the event and contact Maintenance.

D. The System Operator will rackout and perform a visual inspection of the circuit breaker and write a condition report.

63. Per Tech Specs Bases 3.3.1, Reactor Trip System (RTS) Instrumentation, what is the basis of the Pressurizer Water Level - High Reactor trip?

A. Protects the pressurizer safety valves against water relief.

B. Provides the primary protection for preventing RCS over pressurization.

C. Protects against loss of pressure control due to spray nozzle being submerged.

D. Provides protection against exceeding containment design pressure in the event of a LOCA.

64. Unit 1 is in Mode 6 for a refueling outage.

- Two Plant Operators are required to enter a room that is posted as a **Locked High Radiation Area (LHRA)** to perform work.

Which one of the following completes the statements below?

The radiation level at which this posting is required is _(1)_.

The LHRA key is obtained from _(2)_.

A. 1) > 100 mrem/hr

2) Health Physics Supervision

B. 1) > 100 mrem/hr

2) the Shift Support Supervisor (SSS)

C. 1) > 1000 mrem/hr

2) Health Physics Supervision

D. 1) > 1000 mrem/hr

2) the Shift Support Supervisor (SSS)

65. Which one of the following completes the statements below for entry into the Dry Cask Storage Radiation Controlled Area (RCA)?

Per AP-42, Access Control, the operator _(1)_ required to log in on the normal Auxiliary Building Access Control System (ACS) terminal prior to entering the Dry Cask Storage Area RCA.

Upon exiting from the Dry Cask RCA, the operator is required to perform a 2 minute frisk and also use the _(2)_.

A. 1) IS

2) Primary Access Point (PAP) exit portal monitors

B. 1) IS

2) Auxiliary Building RCA exit portal monitors

C. 1) is NOT

2) Primary Access Point (PAP) exit portal monitors

D. 1) is NOT

2) Auxiliary Building RCA exit portal monitors

66. Which one of the following completes the statement below?

An employee who is a fully documented radiation worker and DOES NOT declare her pregnancy has an annual FNP Administrative TEDE limit of _____ .

A. 450 mRem

B. 500 mRem

C. 2000 mRem

D. 5000 mRem

67. Unit 1 is performing the actions of EEP-3.0, Steam Generator Tube Rupture, due to a tube rupture in the 1B SG.

- The 1B SG Narrow range level is 36% and rising.

Which one of the following completes the statements below?

The 1B SG narrow range level _(1)_ adequate to begin the initial RCS cooldown. The operational implication of having sufficient level in the 1B SG prior to the cooldown is to _(2)_.

A. 1) is NOT

2) ensure a secondary side heat sink

B. 1) is NOT

2) prevent SG depressurization during the RCS cooldown

C. 1) IS

2) ensure a secondary side heat sink

D. 1) IS

2) prevent SG depressurization during the RCS cooldown

68. FRP-Z.1, Response to High Containment Pressure, has the following caution:

IF ECP-1.1, Loss of Emergency Coolant Recirculation, is in effect, THEN Containment Spray should be operated as directed in ECP-1.1.

Which one of the following describes the bases for giving priority to ECP-1.1?

ECP-1.1 directs the operation of the Containment Spray (CS) pumps to ensure _____.

A. RWST level is conserved

B. adequate NPSH for the RHR pumps is available

C. the maximum available Containment heat removal systems are running

D. automatic swapover of the CS pumps to the Containment sump is prevented

69. Unit 1 is operating at 100% power and the following conditions exist:

- #1 Waste Monitor Tank (WMT) release is in progress.
- The Unit 1 Rad Side SO is at the RCA exit preparing to enter the portal monitors.

Subsequently, the plant emergency alarms sounds and an announcement is made declaring a Site Area Emergency.

Which one of the following completes the statements below?

The Rad Side SO will go to the designated assembly area _(1)_.

The designated assembly area for the Rad Side SO is the _(2)_.

A. 1) after securing the #1 WMT release

2) Operations Support Center (OSC)

B. 1) after securing the #1 WMT release

2) Control Room

C. 1) immediately

2) Operations Support Center (OSC)

D. 1) immediately

2) Control Room

70. The crew has transitioned to ECP-1.2, LOCA Outside Containment.

- Step 2 of ECP-1.2 is in progress and the first flow path has been isolated.

The following conditions exist:
- Aux Building radiation levels are rising slowly.
- Safety Injection flow is stable.
- Aux Building sump levels are rising slowly.
- PI-402 and 403, RCS 1C/1A LOOP RCS NR PRESS, are rising.

Which one of the following completes the statements below per ECP-1.2?

The first flow path that was isolated was _(1)_ injection.

The intersystem LOCA _(2)_ been isolated.

| | (1) | (2) |
|---|---|---|
| A. | RCP seal | HAS |
| B. | RCP seal | has NOT |
| C. | RHR cold leg | HAS |
| D. | RHR cold leg | has NOT |

71. Unit 1 was operating at 100% power when a Reactor Trip and SI occurred due to a steam line break in containment. The following conditions exist:

- The operating crew is performing the actions of EEP-2.0, Faulted Steam Generator Isolation.
- The maximum total AFW flow rate that can be achieved is 350 GPM.
- Containment pressure is 6 psig and falling.
- SG Narrow range levels are:
  - 1A - Off Scale Low
  - 1B - 32% and decreasing slowly
  - 1C - 34% and decreasing slowly

Which one of the following completes the statement below?

Secondary heat sink _(1)_ adequate because _(2)_.

A. 1) IS

2) 1B and 1C SG levels are sufficient

B. 1) is NOT

2) Neither SG levels nor AFW flow capability is sufficient

C. 1) IS

2) AFW flow capability is sufficient

D. 1) is NOT

2) 1B and 1C SG levels are sufficient but AFW flow capability is NOT sufficient

72. Unit 2 has experienced a large steam break inside containment and the following conditions exist:

- 1A SG Wide Range level indicates 0%.
- AFW flow to 1B and 1C SG is currently 500 gpm.
- FRP-P.1, Response To Imminent Pressurized Thermal Shock, has been entered on a RED Path.
- RCS cold leg temperature continues to decrease slowly.
- RCS pressure is 1500 psig and stable.

Which one of the following completes the statements below concerning the mitigation strategy of FRP-P.1?

The RCS cooldown must _(1)_.

An RCS pressure reduction _(2)_ required.

| | (1) | (2) |
|---|---|---|
| A. | continue | is NOT |
| B. | continue | IS |
| C. | be stopped | is NOT |
| D. | be stopped | IS |

73. A Dual Unit LOSP with a LOCA on Unit 1 has occurred and the following conditions exist:

- EEP-1.0, Loss of Reactor or Secondary Coolant, is in progress.

**At 1000:**

- WA2, 1-2A DG GEN FAULT TRIP, comes into alarm.

**At 1015:**

- The following alarms are received:
  - CF3, 1A OR 1B RHR PUMP OVERLOAD TRIP
  - CH2, RWST LVL A TRN LO
  - CH3, RWST LVL B TRN LO

Which one of the following states:

1) the status of Unit 1 emergency recirculation capability

and

2) the action(s) that the applicable procedure(s) direct?

A. 1) One train ONLY of emergency recirculation capability has been lost.

2) Transfer to Cold Leg **AND** Containment Spray recirculation at this time.

B. 1) One train ONLY of emergency recirculation capability has been lost.

2) Transfer to Cold Leg recirculation ONLY.

C. 1) Both trains of emergency recirculation capability have been lost.

2) Minimize HHSI flow to the minimum required to remove decay heat while attempting to restore at least one train of emergency recirculation.

D. 1) Both trains of emergency recirculation capability have been lost.

2) Secure HHSI pumps while attempting to restore at least one train of emergency recirculation.

74. The crew is responding to a Steam Line Break on Unit 1.

- Due to equipment failures, ECP-2.1, Uncontrolled Depressurization of All Steam Generators, has been entered.
- All SG Narrow Range levels are 25% and lowering.

Which one of the following completes the statement below?

Per ECP-2.1, AFW flow will be adjusted to _(1)_ .

A. 0 gpm to **each** SG to prevent excessive cooldown

B. at least 20 gpm to **each** SG to prevent dryout of the SGs

C. at least 20 gpm **total** AFW flow to minimize thermal stress to the SGs

D. at least 395 gpm **total** AFW flow to maintain adequate heat sink

75. Which one of the following is the **first** Major Action Category in FRP-Z.2, Response To Containment Flooding, and reason for this in accordance with the background document?

A. Identify unexpected sources of water in the sump since flooding could damage critical plant equipment.

B. Evaluate the ECCS system status to determine a strategy to transition to simultaneous cold and hot leg recirculation.

C. Have chemistry evaluate sump level, chemistry, and activity level to determine a strategy to transfer excess water out of containment.

D. Notify the TSC of sump chemistry, and activity level to determine potential changes in the planned transition to simultaneous cold and hot leg recirculation.

76. Unit 1 is at 98% power.

The OATC pulls Control Rods 2 steps and the following indications occur:

- Control Bank D Group Step Counters indicate 227 steps.
- On DRPI, Control Bank D, rod P8 drops to 144 steps.
- On DRPI, all other Control Bank D rods indicate 228 steps.
- Other Control Room parameters indicate Control Rod P8 has dropped to 144 steps.

Which one of the following completes the statements below?

__(1)__ , will come into alarm due to the rod malfunction.

Per the BASES of Tech Spec 3.1.4, Rod Group Alignment Limits, a power reduction to ≤ 75% power is required to ensure __(2)__ .

A. 1) FF5, COMP ALARM ROD SEQ/DEV OR PR FLUX TILT

2) total available rod worth is within safety analyses limits

B. 1) FE2, CONT ROD BANK POSITION LO-LO

2) total available rod worth is within safety analyses limits

C. 1) FF5, COMP ALARM ROD SEQ/DEV OR PR FLUX TILT

2) the local Linear Heat Rate increases will not exceed core design criteria

D. 1) FE2, CONT ROD BANK POSITION LO-LO

2) the local Linear Heat Rate increases will not exceed core design criteria

77. Unit 1 is stable at 100% power with the following conditions:

- AOP-16.0, CVCS Malfunction, is in progress due to a loss of Pressurizer level control.
- At the step to "Check Pressurizer level", Pressurizer level is 76% and rising.

Which one of the following completes the statements below?

The Pressurizer is __(1)__ per Tech Spec 3.4.9, Pressurizer.

Per AOP-16.0, the Control Room crew is required to __(2)__ .

| | (1) | (2) |
|---|---|---|
| A. | NOT OPERABLE | trip the Reactor and go to EEP-0.0, Reactor Trip or Safety Injection |
| B. | NOT OPERABLE | reduce Reactor power/TAVG as necessary using UOP-3.1, Power Operation |
| C. | OPERABLE | trip the Reactor and go to EEP-0.0, Reactor Trip or Safety Injection |
| D. | OPERABLE | reduce Reactor power/TAVG as necessary using UOP-3.1, Power Operation |

78. Unit 1 is in Mode 3 with the following conditions:

- RCS pressure is 1800 psig.
- An RCS heatup is in progress.

1A Accumulator has been declared INOPERABLE.

- 1A Accumulator pressure is 655 psig.
- 1A Accumulator level is 41%.

Per Tech Specs 3.5.1, Accumulators, which one of the following completes the statements below?

Restore 1A Accumulator to OPERABLE by __(1)__ to within the Tech Spec required range.

Tech Spec 3.5.1 BASES states that __(2)__ .

A. 1) lowering 1A Accumulator pressure

2) the maximum pressure limit prevents injecting nitrogen into the RCS during a LOCA

B. 1) lowering 1A Accumulator pressure

2) the maximum pressure limit prevents the accumulator relief valve from actuating

C. 1) raising 1A Accumulator level

2) the minimum level limit prevents injecting nitrogen into the RCS during a LOCA

D. 1) raising 1A Accumulator level

2) the minimum level limit ensures peak clad temperature remains below 2200°F during a LOCA

79. Unit 1 is in Mode 2 at 3% power when the following occurs:

- PCV-444B, PRZR PORV, fails open.
- The OATC performs actions of AOP-100, Instrumentation Malfunction.
- PCV-444B, PRZR PORV, handswitch RED light remains lit.
- The OATC closes MOV-8000B, PRZR PORV ISO.
- RCS pressure is rising.

Which one of the following completes the statements below per Tech Spec 3.4.11, Pressurizer Power Operated Relief Valves (PORVs)?

PRZR PORV ISO, MOV-8000B is required to be closed with

power __(1)__ .

Entry into Mode 1 __(2)__ allowed by Tech Specs.

| | (1) | (2) |
|---|---|---|
| A. | removed | is NOT |
| B. | maintained | is NOT |
| C. | removed | IS |
| D. | maintained | IS |

80. Unit 1 is in MODE 4, with the following plant conditions:

- LCV-115B, RWST TO CHG PUMP, will not open due to a malfunction within the Limitorque Motor.
- 1B Charging pump is aligned to B train.
- 1B BAT is on service.
- 1A BAT is on standby.
- The 1B DG is declared INOPERABLE.

Which one of the following describes the impact of these conditions on the number of FUNCTIONAL Boration Flowpaths, per TRM 13.1.3, Boration Flow Paths-Operating?

There is(are) _____ FUNCTIONAL boration Flowpath(s) .

A. NO

B. ONLY one

C. ONLY two

D. three

81. Unit 2 is in Mode 5 with the following conditions:

- CTMT Purge was secured for a Local Leak Rate Test (LLRT) and the LLRT Tagout has been cleared.
- R-24A, Containment Radiation Monitor, has been declared INOPERABLE.

**Prior** to placing the CTMT Purge system in operation per SOP-12.2, Containment Purge and Pre-Access Filtration System, which one of the following requirements must be met?

A. R-24A is required to be restored to OPERABLE status.

B. Gaseous Release Permits are required to be issued.

C. Alternate sampling is required to be performed per the ODCM.

D. CTMT Pre-Access Filtration must be placed in service prior to placing CTMT Purge in service.

82. The following conditions exist on Unit 1:

**At 1000:**

- A Reactor Trip was initiated, but was unsuccessful.
- The crew entered FRP-S.1, Response to Nuclear Power Generation/ATWT.
- The Rover was dispatched to open Reactor Trip breakers.

**At 1005:**

- Per FRP-S.1, an Emergency Boration is in progress from the 1A BAT (Boric Acid Tank).
- FK-122, CHG FLOW, is in AUTO.
- FI-122A, CHG FLOW, indicates 35 gpm.
- All Reactor Trip and Reactor Trip bypass breakers are open.
- The Shift Manager is evaluating emergency classifications.

Which one of the following completes the statements below?

At 1005, Charging flow __(1)__ adequate for the Emergency Boration.

The Shift Manager is required to declare a(n) __(2)__ emergency classification.

**Reference Provided**

| | (1) | (2) |
|---|---|---|
| A. | IS | Alert |
| B. | is NOT | Alert |
| C. | IS | Site Area |
| D. | is NOT | Site Area |

83. Unit 1 is at 28% power with the following conditions:

**At 1000:**

- PR-4029, CONDENSER PRESSURE, indicates as follows:
  - PT0501 is 1.7 psia and slowly rising.
  - PT0502 is 1.7 psia and slowly rising.
- KK1, TURB COND VAC LO, is in alarm.
- HP Gland steam supply pressure is 3.5 psig.
- Main Turbine LP Gland pressures are as follows:
  - #3 LP Gland pressure is 2.0 psig.
  - #4 LP Gland pressure is 4.8 psig.
  - #5 LP Gland pressure is 2.5 psig.
  - #6 LP Gland pressure is 0.5 psig.

**At 1015:**

- PR-4029, CONDENSER PRESSURE, indicates as follows:
  - PT0501 is 2.1 psia and slowly rising.
  - PT0502 is 2.1 psia and slowly rising.
- KK2, TURB COND VAC LO-LO, is in alarm.

Which one of the following completes the statements below per AOP-8.0?

The action required at 1000 to stabilize Condenser pressure is to __(1)__ .

The action required at 1015 is to __(2)__ .

Procedure titles are as follows:

AOP-3.0, Turbine Trip Below P-9 Setpoint
AOP-8.0, Partial Loss of Condenser Vacuum

A. 1) bypass the #6 Gland Seal Regulator

   2) perform AOP-3.0 in parallel with AOP-8.0

B. 1) bypass the #6 Gland Seal Regulator

   2) perform AOP-3.0 ONLY

C. 1) throttle closed V528, SPILLOVER VALVE BYPASS

   2) perform AOP-3.0 in parallel with AOP-8.0

D. 1) throttle closed V528, SPILLOVER VALVE BYPASS

   2) perform AOP-3.0 ONLY

84. Unit 1 is at 37% power with the following conditions:

- FCV-488, 1B SG FW FLOW, fails open and sticks open.

Given the following Tech Spec title:

- 3.7.3, Main Feedwater Stop Valves and Main Feedwater Regulation Valves (MFRVs) and Associated Bypass Valves

With NO OPERATOR ACTIONS, which one of the following completes the statements below?

A Reactor Trip __(1)__ occur.

Per the BASES of Tech Spec 3.7.3, the primary reason for automatic closure of the Main Feedwater Regulating valves is to prevent __(2)__ .

| | __(1)__ | __(2)__ |
|---|---|---|
| A. | will NOT | an excessive mass addition to the Steam Generator during a Steamline Break event |
| B. | will NOT | a radiological release through the feedline penetration during a Steam Generator Tube Rupture event |
| C. | WILL | an excessive mass addition to the Steam Generator during a Steamline Break event |
| D. | WILL | a radiological release through the feedline penetration during a Steam Generator Tube Rupture event |

85. Unit 1 is in Mode 3 with the following conditions:

- A Grid disturbance caused a loss of all offsite power.
- During the event, the 1-2A DG started and then tripped.
- Operating DG status is as follows:
  - 1C DG is supplying Unit 1.
  - 1B DG is supplying Unit 1.
  - 2B DG is supplying Unit 2.
- ACC reports that the following lines have been **restored**:
  - Webb 230 KV line
  - Snowdoun 500KV line
- #1 Auto Bank Transformer is **out of service**.

Which one of the following completes the statements below for an evaluation of **Unit 1** Tech Specs for the **current conditions**?

Perform REQUIRED ACTION of Tech Spec 3.8.1, AC Sources - Operating, _(1)_ .

A 25% extension of the COMPLETION TIME _(2)_ allowed for the initial performance of SR 3.8.1.1 (STP-27.1, A.C. Source Verification).

**Reference Provided**

| | (1) | (2) |
|---|---|---|
| A. | CONDITION A | IS |
| B. | CONDITION B | IS |
| C. | CONDITION A | is NOT |
| D. | CONDITION B | is NOT |

86. Unit 1 is at 100% power when the following conditions occur:

- VC4, 1B BATT CHG FAULT OR DISC, alarms.
- EEO5, 1B BATTERY CHARGER SUPPLY BREAKER, has tripped open.
- 1B DC Bus Voltage is 130 Volts.

Given the following Tech Spec titles:

- 3.8.4, DC Sources-Operating
- 3.8.9, Distribution Systems-Operating

Which one of the following completes the statement below?

_____ is(are) required to be implemented.

**Reference Provided**

A. **NEITHER** Tech Spec 3.8.4 **nor** Tech Spec 3.8.9

B. **ONLY** Tech Spec 3.8.4

C. **ONLY** Tech Spec 3.8.9

D. **BOTH** Tech Spec 3.8.4 and Tech Spec 3.8.9

87. Unit 1 tripped from 100% power with the following conditions:

- A Safety Injection occurred due to a Steam Dump malfunction.
- Status of AFW pumps is as follows:
  - 1A MDAFW pump is Tagged Out.
  - 1B MDAFW pump is tripped.
  - The TDAFW pump trip/throttle linkage is broken.
- The Safety Injection signal has been reset.
- FRP-H.1, Response to Loss of Secondary Heat Sink, is in progress with the crew attempting to restore SG level using a Condensate pump.

Which one of the following completes the statements below?

Implementation of FRP-H.1, Attachment 1, Main Feedwater Bypass Valves Automatic Closure Defeat, __(1)__ required to open the Main Feedwater Bypass valves.

Criteria to exit FRP-H.1 is met __(2)__ .

| | (1) | (2) |
|---|---|---|
| A. | IS | ONLY after at least one SG NR level is > 31% |
| B. | is NOT | ONLY after at least one SG NR level is > 31% |
| C. | IS | when stable Condensate flow is established and SG wide range level is rising |
| D. | is NOT | when stable Condensate flow is established and SG wide range level is rising |

88. Unit 1 is at 100% power when the following occurs:

- WE1, 1F, 1H, OR 1K 4KV BUS BKR AUTO TRIP, is in alarm.
- WE3, 1H 4KV BUS UV OR LOSS OF DC, is in alarm.
- The following indications are noted on the handswitch for 4160V Breaker DF-13-1, SUPPLY TO 1H 4160V BUS:
  - The amber light is lit.
  - The green light is lit.
- The AC PWR AVAIL lights for 1F 4160V bus are illuminated.
- The AC PWR AVAIL lights for 1H 4160V bus are NOT illuminated.

Which one of the following completes the statements below?

The 1C DG _(1)_ autostart due to the DF-13-1 malfunction.

For Unit 1, a REQUIRED ACTION statement of Tech Spec 3.8.1, AC Sources - Operating, _(2)_ required to be implemented.

| | (1) | (2) |
|---|---|---|
| A. | WILL | is NOT |
| B. | WILL | IS |
| C. | will NOT | is NOT |
| D. | will NOT | IS |

89. Which one of the following describes TRM 13.12.4, Gas Storage Tanks, limitations on the quantity of radioactivity permitted in the Waste Gas Decay Tank(s) and the basis for the limit?

The quantity contained in each Waste Gas Decay Tank shall be ≤ _(1)_ to ensure an uncontrolled release will not exceed a whole body dose of 0.5 REM to _(2)_ .

A. 1) 10 curies, excluding tritium and dissolved or entrained noble gases

2) an operator at the Waste Gas Control Panel

B. 1) 70,500 curies of noble gases (considered as Xe-133)

2) an operator at the Waste Gas Control Panel

C. 1) 10 curies, excluding tritium and dissolved or entrained noble gases

2) an individual at the exclusion area boundary

D. 1) 70,500 curies of noble gases (considered as Xe-133)

2) an individual at the exclusion area boundary

90. Unit 1 is at 100% power with the following conditions:

**At 1000:**

- #4 Waste Gas Decay Tank (WGDT) release is in progress.
- CTMT Mini-purge supply and exhaust fans are running.
- The Radwaste Ventilation system is running.

**At 1015:**

- R-14, PLANT VENT, radiation monitor is oscillating erratically.
- The HIGH ALARM and LOW ALARM lights are LIT.
- The Shift Supervisor has declared R-14 INOPERABLE.

Which one of the following completes the statements below?

The WGDT release __(1)__ terminated.

With R-14 INOPERABLE, to continue all the releases that were in progress at 1000, the ODCM requires sampling by obtaining __(2)__ .

**REFERENCE PROVIDED**

| | (1) | (2) |
|---|---|---|
| A. | IS | at least two independent samples |
| B. | IS | grab samples at least once per 8 hours |
| C. | is NOT | at least two independent samples |
| D. | is NOT | grab samples at least once per 8 hours |

91. Unit 1 is at 100% power with the following conditions:

Several substations are separated from the grid resulting in the following plant conditions:

- Unit 1 Generator Voltage is 20.45 kV.
- The following alarms have actuated:
  — WE2, 1F 4KV BUS OV-OR-UV OR LOSS OF DC.
  — VE2, 1G 4KV BUS OV-OR-UV OR LOSS OF DC.
- Grid frequency has fallen to 59.6 hertz and is stable.
- 4160V Bus voltages are 3840 Volts.
- This condition has existed for the past hour.

Which one of the following completes the statements below?

The Generator temperatures will _(1)_ .

AOP-5.2, Degraded Grid, will require the crew to _(2)_ .

| | (1) | (2) |
|---|---|---|
| A. | RISE | immediately enter AOP-17.1, Rapid Turbine Power Reduction |
| B. | LOWER | immediately enter AOP-17.1, Rapid Turbine Power Reduction |
| C. | RISE | place the unit in mode 3 in the next 6 hours using UOP-3.1, POWER OPERATION |
| D. | LOWER | place the unit in mode 3 in the next 6 hours using UOP-3.1, POWER OPERATION |

92. Unit 1 had an extended Loss of all AC power with the following conditions:

**At 1000:**

- Power has been restored to the 1F and 1K 4160V busses.
- The Shift Supervisor is preparing to exit ECP-0.0, Loss of ALL AC Power, and is at the step to "Evaluate plant conditions".
- SCMM is 39°F.
- Pressurizer level is 16% and slowly falling.
- CTMT pressure is 5.8 psig.
- SI equipment did **NOT** automatically actuate when power was restored.

**At 1002:**

- ECP-0.0 has been exited and the applicable recovery procedure has been entered.
- The Shift Supervisor is informed that a RED path exists for Heat Sink on the IPC CSF status trees.

Which one of the following completes the statements below?

**At 1000**, entry into _(1)_ is required.

**At 1002**, per the applicable procedure in effect, the Control Room crew _(2)_ required to enter FRP-H.1, Loss of Secondary Heat Sink.

Procedure titles are as follows:

ECP-0.1, Loss of All AC Power Recovery Without SI Required.
ECP-0.2, Loss of All AC Power Recovery With SI Required.

| | (1) | (2) |
|---|---|---|
| A. | ECP-0.1 | IS |
| B. | ECP-0.1 | is NOT |
| C. | ECP-0.2 | IS |
| D. | ECP-0.2 | is NOT |

93. Unit 1 is at 75% power and ramping up with the following conditions:

- A reactivity plan has been developed and approved for the reactivity additions.
- A Reactivity Management SRO has been stationed due to frequent reactivity additions.

Which one of the following completes the statements below per NMP-OS-001, Reactivity Management Program?

During the ramp up, the limit for Control Rod withdrawal is a maximum of __(1)__ per rod pull.

The Reactivity Management SRO __(2)__ authorize changes to the reactivity plan.

| | (1) | (2) |
|---|---|---|
| A. | three steps | CANNOT |
| B. | three steps | CAN |
| C. | four steps | CANNOT |
| D. | four steps | CAN |

94. Unit 1 is at 100% power with the following conditions:

- The packing was replaced on MOV-8812B, CTMT SUMP TO 1B RHR PUMP.
- The MOV was left in the closed position.
- The Return to Service Tagout is in progress and power has been restored to the MOV.

Which one of the following states the **minimum** action(s) required to restore MOV-8812B to OPERABLE after the valve packing replacement?

MOV-8812B is OPERABLE when _____ .

A. the MOV's auto open function is tested per its Surveillance Test Procedure

B. the MOV has been satisfactorily time stroked per its Surveillance Test Procedure

C. the MOV is stroked open and closed from its remote handswitch per the guidance of the Tagout

D. the MOV is manually stroked open and closed per the guidance of the Tagout, with no leakage verified

95. Unit 2 is at 100% power with the following conditions:

- The 2B RHR pump is being Tagged Out for a scheduled oil change and maintenance inspection.
- Maintenance is expected to take 36 hours to complete.

Which one of the following completes the statements below?

The LCO required is a __(1)__ LCO.

In addition to a Control Room LCO Log entry, an LCO/TR Status Sheet __(2)__ required to document the LCO.

| | (1) | (2) |
|---|---|---|
| A. | Voluntary | IS |
| B. | Voluntary | is NOT |
| C. | Mandatory | IS |
| D. | Mandatory | is NOT |

96. Unit 1 is shutdown with the following conditions:

- STP-18.4, Containment Mid-Loop and/or Refueling Integrity Verification and Containment Closure, has been completed to allow refueling operations.
- The Containment Equipment Hatch is open.
- During fuel movement, a spent fuel assembly has dropped from the Manipulator Crane to the bottom of the cavity.
- Both R-24A & B, CTMT PURGE, are in alarm.
- AOP-30, Refueling Accident, actions are in progress.

Which one of the following completes the statements below?

The ACCEPTANCE CRITERIA of STP-18.4 for Refueling Integrity states that the Containment Equipment Hatch is capable of being closed within __(1)__ of notification.

Per AOP-30, actions are required to place __(2)__ in service without delay.

| | __(1)__ | __(2)__ |
|---|---|---|
| A. | four hours | PRF (Penetration Room Filtration) |
| B. | four hours | CREFS (Control Room Emergency Filtration System) |
| C. | two hours | PRF (Penetration Room Filtration) |
| D. | two hours | CREFS (Control Room Emergency Filtration System) |

97. Unit 1 is operating at 100% power with the following conditions:

- A release of the #2 Waste Monitor Tank (WMT) is planned.
- R-18, LIQ WASTE DISCH, is INOPERABLE.
- Chemistry has taken two independent samples of the #2 WMT and reports the activity is $<1.4 \times 10^{-5}$ µCi/ml and is within the normal limits for a release.
- Two Shift Radio-Chemists have verified the manual input for the computer generated release rate calculation.

Which one of the following completes the statement below?

Per the ODCM, a WMT release _____ .

A. is NOT permitted until the activity is lowered to $<1 \times 10^{-7}$ µCi/ml

B. is NOT permitted with R-18 INOPERABLE, but the tank can be transferred to Unit 2 for release

C. IS permitted, but as a minimum two qualified plant personnel are required to verify the discharge lineup **only**

D. IS permitted, but as a minimum two qualified plant personnel are required to verify the discharge lineup **and** an SRO is required to verify the entire release rate calculation

98. Unit 1 tripped from 100% power with the following conditions:

- A Safety Injection was actuated due to a SG Tube Rupture on the 1B SG.
- The crew is performing EEP-3.0, Steam Generator Tube Rupture.
- The following results are reported:
  — HV3369B, 1B SG MSIV, will not close.
  — HV3370B, 1B SG MSIV, will not close.
- 1B SG pressure is 950 psig.

Which one of the following completes the statements below?

The Control Room crew is required to __(1)__ .

The recovery strategy for the selected procedure is to __(2)__ .

Procedure titles are as follows:
EEP-3.0, Steam Generator Tube Rupture
ECP-3.1, SGTR with Loss of Reactor Coolant Subcooled Recovery Desired

| | __(1)__ | __(2)__ |
|---|---|---|
| A. | continue in EEP-3.0 | **complete** an RCS cooldown first; then perform an RCS depressurization |
| B. | transition to ECP-3.1 | **complete** an RCS cooldown first; then perform an RCS depressurization |
| C. | continue in EEP-3.0 | **start** an RCS cooldown and then perform an RCS depressurization during the cooldown |
| D. | transition to ECP-3.1 | **start** an RCS cooldown and then perform an RCS depressurization during the cooldown |

99. Unit 1 has tripped from 100% power with the following conditions:

- A Safety Injection occurred after the Reactor Trip due to a Steam Dump malfunction.
- All MSIV's are closed.
- The crew is evaluating SI termination criteria in EEP-0.0, Reactor Trip or Safety Injection.
- The SCMMs indicate 105°F in CETC mode.
- All SG Narrow Range levels are 43% and rising.
- RCS pressure is 1820 psig and slowly rising.
- Pressurizer level is 5% and rising.

Which one of the following describes the required actions regarding SI Termination?

A. Immediately transition to ESP-1.1, SI Termination, to terminate SI flow.

B. Maintain SI flow until PZR level recovers, then transition to ESP-1.2, Post LOCA Cooldown and Depressurization.

C. Maintain SI flow until PZR level recovers, then terminate SI flow in EEP-0.0, Reactor Trip or Safety Injection.

D. Immediately terminate SI flow in EEP-0, Reactor Trip or Safety Injection, then transition to ESP-1.1, SI Termination.

100. A LOCA has occurred on Unit 1 with the following conditions:

- There has been **no** HHSI or LHSI flow for an extended period of time.
- ESP-1.2, Post LOCA Cooldown and Depressurization, was in progress when conditions required a transition to FRP-C.2, Response to Degraded Core Cooling.
- A SG depressurization is in progress per FRP-C.2.

Subsequently, core cooling is re-established:

- 1A RHR pump is started.
- LHSI flow is 1800 gpm.

Which one of the following completes the statements below?

The SG depressurization is performed at _(1)_ per FRP-C.2.

Once the SG depressurization is complete and core cooling is re-established, a transition will be made to __(2)_.

A. 1) a maximum attainable rate

2) EEP-1.0, Loss of Reactor or Secondary Coolant

B. 1) <100°F/hour cooldown rate

2) EEP-1.0, Loss of Reactor or Secondary Coolant

C. 1) a maximum attainable rate

2) ESP-1.2, Post LOCA Cooldown and Depressurization

D. 1) <100°F/hour cooldown rate

2) ESP-1.2, Post LOCA Cooldown and Depressurization

# REFERENCES

| Step | Action/Expected Response | Response Not Obtained |
|---|---|---|
| | 34.2 [CA] WHEN one of the following conditions occur,<br>THEN stop the RCS pressure reduction.<br><br>[ ] RCS pressure is less than affected SG pressure, AND pressurizer level greater than 15%.<br><br>OR<br><br>[ ] Pressurizer level greater than 63%.<br><br>OR<br><br>[ ] SUBCOOLED MARGIN MONITOR indication less than 16°F subcooled in CETC mode. | |

**SS2** - Failure of Reactor Protection System Instrumentation to Complete or Initiate an Automatic Reactor Trip Once a Reactor Protection System Setpoint Has Been Exceeded **AND** Manual Trip Was NOT Successful. (pg. 45)

**SA2** - Failure of Reactor Protection System Instrumentation to Complete or Initiate an Automatic Reactor Trip Once a Reactor Protection System Setpoint Has Been Exceeded **AND** Manual Trip Was Successful. (pg. 50)

## 3.8 ELECTRICAL POWER SYSTEMS

### 3.8.1 AC Sources — Operating

LCO 3.8.1 The following AC electrical sources shall be OPERABLE:

a. Two qualified circuits between the offsite transmission network and the onsite Class 1E AC Electrical Power Distribution System; and

b. Two diesel generator (DG) sets capable of supplying the onsite Class 1E power distribution subsystem(s); and

c. Automatic load sequencers for Train A and Train B.

APPLICABILITY: MODES 1, 2, 3, and 4.

ACTIONS

----------NOTE----------
LCO 3.0.4b is not applicable to DGs.
---

| CONDITION | REQUIRED ACTION | COMPLETION TIME |
|---|---|---|
| A. One required offsite circuit inoperable. | A.1 Perform SR 3.8.1.1 for required OPERABLE offsite circuit. | 2 hours<br><br>AND<br><br>Once per 8 hours thereafter |
| | AND | |
| | A.2 Declare required feature(s) with no offsite power available inoperable when its redundant required feature(s) is inoperable. | 24 hours from discovery of no offsite power to one train concurrent with inoperability of redundant required feature(s) |
| | AND | |
| | | (continued) |

ACTIONS

| CONDITION | REQUIRED ACTION | COMPLETION TIME |
|---|---|---|
| A. (continued) | A.3 Restore required offsite circuit to OPERABLE status. | 72 hours<br><br>AND<br><br>13 days from discovery of failure to meet LCO |
| B. One DG set inoperable. | ----------NOTE----------<br>LCO 3.0.4c is applicable when only one of the three DGs is inoperable.<br>---------- | |
| | B.1 Perform SR 3.8.1.1 for the required offsite circuit(s). | 2 hours<br><br>AND<br><br>Once per 8 hours thereafter |
| | AND | |
| | B.2 Declare required feature(s) supported by the inoperable DG set inoperable when its required redundant feature(s) is inoperable. | 4 hours from discovery of Condition B concurrent with inoperability of redundant required feature(s) |
| | AND | |
| | B.3.1 Determine OPERABLE DG set is not inoperable due to common cause failure. | 24 hours |
| | OR | |
| | | (continued) |

ACTIONS

| CONDITION | REQUIRED ACTION | | COMPLETION TIME |
|---|---|---|---|
| B. (continued) | B.3.2 | Perform SR 3.8.1.6 for OPERABLE DG set. | 24 hours |
| | AND | | |
| | B.4 | Restore DG set to OPERABLE status. | 10 days<br>AND<br>13 days from discovery of failure to meet LCO |

## 3.8 ELECTRICAL POWER SYSTEMS

### 3.8.4 DC Sources — Operating

LCO 3.8.4 The Train A and Train B Auxiliary Building and Service Water Intake Structure (SWIS) DC electrical power subsystems shall be OPERABLE.

APPLICABILITY: MODES 1, 2, 3, and 4.

ACTIONS

| CONDITION | REQUIRED ACTION | COMPLETION TIME |
|---|---|---|
| A. One Auxiliary Building DC electrical power subsystem inoperable. | A.1 Restore the Auxiliary Building DC electrical power subsystem to OPERABLE status. | 2 hours |
| B. One Auxiliary Building DC electrical power subsystem with battery connection resistance not within limit. | B.1 Restore the battery connection resistance to within limit. | 24 hours |
| C. Required Action and associated Completion Time of Condition A or B not met. | C.1 Be in MODE 3.<br><br>AND<br><br>C.2 Be in MODE 5. | 6 hours<br><br><br><br>36 hours |
| D. One required SWIS DC electrical power subsystem battery connection resistance not within limit. | D.1 Restore the battery connection resistance to within the limit. | 24 hours |
| E. One required SWIS DC electrical power subsystem inoperable.<br>OR<br>Required Action and associated Completion Time of Condition D not met. | E.1 Declare the associated Service Water System train inoperable. | Immediately |

## 3.8 ELECTRICAL POWER SYSTEMS

### 3.8.9 Distribution Systems — Operating

LCO 3.8.9 Train A and Train B AC, DC, and AC vital bus electrical power distribution subsystems shall be OPERABLE.

APPLICABILITY: MODES 1, 2, 3, and 4.

ACTIONS

| CONDITION | REQUIRED ACTION | COMPLETION TIME |
|---|---|---|
| A. One or more AC electrical power distribution subsystems inoperable. | A.1 Restore AC electrical power distribution subsystem(s) to OPERABLE status. | 8 hours<br><br><u>AND</u><br><br>16 hours from discovery of failure to meet LCO |
| B. One or more AC vital buses inoperable. | B.1 Restore AC vital bus subsystem(s) to OPERABLE status. | 8 hours<br><br><u>AND</u><br><br>16 hours from discovery of failure to meet LCO |
| C. One Auxiliary Building DC electrical power distribution subsystem inoperable. | C.1 Restore Auxiliary Building DC electrical power distribution subsystem to OPERABLE status. | 2 hours<br><br><u>AND</u><br><br>16 hours from discovery of failure to meet LCO |

ACTIONS

| CONDITION | REQUIRED ACTION | COMPLETION TIME |
|---|---|---|
| D. Required Action and associated Completion Time of Condition A, B, or C not met. | D.1 Be in MODE 3.<br><br>AND<br><br>D.2 Be in MODE 5. | 6 hours<br><br><br><br>36 hours |
| E. One Service Water Intake Structure (SWIS) DC electrical power distribution subsystem inoperable. | E.1 Declare the associated Service Water train inoperable. | Immediately |
| F. Two trains with inoperable distribution subsystems that result in a loss of safety function. | F.1 Enter LCO 3.0.3. | Immediately |

**Table 3-1** Radioactive Gaseous Effluent Monitoring Instrumentation

| Instrument | OPERABILITY Requirements[b] | | |
|---|---|---|---|
| | Minimum Channels OPERABLE | Applicability | ACTION |
| 1. Steam Jet Air Ejector<br><br>Noble Gas Activity Monitor (RE-15) | 1 | MODES 1,2,3,4 | 37 |
| 2. Plant Vent Stack<br><br>a. Noble Gas Activity Monitor (RE-14 or RE-22) | 1 | At all times | 37[a] |
| b. Iodine Sampler | 1 | At all times | 39 |
| c Particulate Sampler | 1 | At all times | 39 |
| d. Flowrate Monitor | 1 | At all times | 36 |
| 3. GASEOUS RADWASTE TREATMENT SYSTEM<br><br>Noble Gas Activity Monitor (RE-14), with Alarm and Automatic Termination of Release | 1 | At all times | 35 |

a. For continuous releases.

b. All requirements in this table apply to each unit.

**Table 3-1** (contd) Notation for Table 3-1 – ACTION Statements

ACTION 35 - With the number of channels OPERABLE less than required by the Minimum Channels OPERABLE requirement, the contents of the tank(s) may be released to the environment provided that prior to initiating the release:

a. At least two independent samples of the tank's contents are analyzed, and

b. At least two technically qualified members of the Facility Staff independently verify the discharge line valving, and

(1) Verify the manual portion of the computer input for the release rate calculations performed on the computer, or

(2) Verify the entire release rate calculations if such calculations are performed manually.

Otherwise, suspend release of radioactive effluents via this pathway.

ACTION 36 - With the number of channels OPERABLE less than required by the Minimum Channels OPERABLE requirement, effluent releases via this pathway may continue provided the flowrate is estimated at least once per 4 hours.

ACTION 37 - With the number of channels OPERABLE less than required by the Minimum Channels OPERABLE requirement, effluent releases via this pathway may continue provided grab samples are taken at least once per 8 hours and these samples are analyzed for gross activity within 24 hours.

ACTION 39 - With the number of channels OPERABLE less than required by the Minimum Channels OPERABLE requirement, effluent releases via the affected pathway may continue provided samples are continuously collected with auxiliary sampling equipment as required in Table 3-3.

ANSWER KEY



## U.S. Nuclear Regulatory Commission

## Site-Specific SRO Written Examination

### Applicant Information

| | |
|---|---|
| Name: | |
| Date: 06/25/13 | Facility/Unit: FARLEY Unit 1 & 2 |
| Region: I ☐ II ☒ III ☐ IV ☐ | Reactor Type: W ☒ CE ☐ BW ☐ GE ☐ |
| Start Time: | Finish Time: |

### Instructions

Use the answer sheets provided to document your answers. Staple this cover sheet on top of the answer sheets. To pass the examination you must achieve a final grade of at least 80.00 percent overall, with 70.00 percent or better on the SRO-only items if given in conjunction with the RO exam; SRO-only exams given alone require a final grade of 80.00 percent to pass. You have 8 hours to complete the combined examination, and 3 hours if you are only taking the SRO portion.

### Applicant Certification

All work done on this examination is my own. I have neither given nor received aid.

_____
Applicant's Signature

### Results

| | | | | |
|---|---|---|---|---|
| RO/SRO-Only/Total Examination Values | 75 | 25 | 100 | Points |
| Applicant's Scores | _____ | _____ | _____ | Points |
| Applicant's Grade | _____ | _____ | _____ | Percent |

ANSWER KEY

1. 001AA2.01 001

Unit 1 is operating at 85% power with the following conditions:

- STP-33.0B, Solid State Protection System Train B Operability Test, is in progress.
- The 'B' Reactor Trip Bypass Breaker has been racked in and closed.
- Control Bank D is at 203 steps.
- The Rod Control Bank Selector Switch is in AUTO.
- PS/446Z, FIRST STG IMPULSE PRESS SEL SWITCH, is in the Channel IV / PT447 position.

Subsequently, the following occurs:

- PT-447, TURB FIRST STG PRESS, fails HIGH.

Which one of the following completes the statements below?

The control rods will _(1)_.

If the reactor is manually tripped at this time, the 'B' Reactor Trip Bypass Breaker _(2)_ light will be LIT.

| | (1) | (2) |
|---|---|---|
| A. | insert | RED |
| B. | insert | GREEN |
| C.✔ | withdraw | GREEN |
| D. | withdraw | RED |

PT-447 failing low will cause rods to insert continuously and failing high will cause rods to withdraw.

**Per FSD-A181007**, Figure 2 Sheet 2, a manual reactor trip will open the 'B' Reactor Trip Bypass Breaker.

**Distracter Analysis**

A. Incorrect. First part is incorrect (See C.1). Plausible if the applicant reverses the system response so that the rod control system would insert rods to suppress the indicated power rise due to the failure instead of trying to adjust actual reactor power and Tavg to match the failed indication.

Second part is incorrect (See C.2). Plausible if the applicant believes that during the performance of STP-33.0B, the 'B' Reactor Trip Bypass Breaker will not open since that train is being tested.

B. Incorrect. First part is incorrect (See A.1).

Second part is correct (See C.2).

C. Correct. First part is correct. Impulse pressure, PT-477 is used to calculate Tref. Since PT-447 failed high, Tref fails to the 100% power Tref and the rod control system will step rods out in order to raise current Tavg to match Tref. Impulse pressure is also used to determine turbine power as compared to reactor power in the rod control circuitry. When PT-447 fails high, the rapid rate of change of impulse power as compared to reactor power will also cause rods to step out while impulse pressure is changing.

This scenario has been run on desktop simulator and the rods will step out (IC 058).

Second part is correct. FSD A18007, Figure 2 sheet 2, shows that a manual trip actuation will open the 'B' Reactor Trip Bypass Breaker.

D. Incorrect. First part is correct (See C.1).

Second part is incorrect (See A.2).

| | |
|---|---|
| K/A: **001AA2.01** | Continuous Rod Withdrawal - Ability to determine and interpret the following as they apply to the Continuous Rod Withdrawal : Reactor tripped breaker indicator |
| Importance Rating: | 4.2 4.2 |
| Technical Reference: | FSD-A181007, Reactor Protection System, Ver 18<br>FNP-1-EEP-0.0, Reactor Trip or Safety Injection, Ver 44<br>FNP-1-AOP-100, Instrumentation Malfunction, Ver 12 |
| References provided: | None |
| Learning Objective: | EVALUATE plant conditions and DETERMINE if entry into AOP-100, Instrument Malfunction is required. (OPS-52521Q02)<br><br>ANALYZE plant conditions and DETERMINE the successful completion of any step in (1) EEP-0, Reactor Trip or Safety Injection [...]. (OPS-52530A07) |
| Question History: | WATTS BAR MAY 09 |
| K/A match: | This question requires the applicant to **determine that a continuous rod withdrawal is occurring** due to the failure of PT-447. After the reactor is tripped, the applicant is then required to **interpret the reactor trip bypass breaker indication as to whether or not it is open.** |
| SRO justification: | N/A |

2. 003A3.05 002

Unit 1 is in Mode 3 and preparing to start the 1C RCP.

Which one of the following completes the statements below per SOP-1.1, Reactor Coolant System?

The 1C RCP oil lift pump handswitch white light indicates _(1)_ .

The 1C RCP breaker closing operation _(2)_ interlocked with a 2 minute time delay.

A. 1) BOTH the oil lift pressure has reached 600 psig AND 2 minutes have elapsed

2) is NOT

B. 1) ONLY that the oil lift pressure has reached 600 psig

2) IS

C✔ 1) ONLY that the oil lift pressure has reached 600 psig

2) is NOT

D. 1) BOTH the oil lift pressure has reached 600 psig AND 2 minutes have elapsed

2) IS

**SOP-1.1**
**3.6 DO NOT attempt to start a RCP unless its oil lift pump has been delivering oil to the upper thrust shoes for at least two minutes**. Observe the oil lift pumps indicating lights to verify correct oil pump motor operation and oil pressure. The oil lift pumps should run at least 1 minute after the RCP's are started. **An interlock will prevent starting a RCP until 600 psig oil pressure is established.**

**Note prior to step 4.3.11** - The oil lift pump must be operated for at least 2 minutes prior to starting the RCP.

**4.3.18 Verify that the Oil Lift Pump for RCP 1C has run for at least two minutes, and is producing adequate pressure (white light ON).**

**Distracter Analysis**

A. Incorrect. First part is incorrect (See C.1). Plausible since the procedure requires both conditions to be met before starting the RCP. The applicant could have the misconception that the light is associated with both the time and oil pressure.

Second part is correct (See C.2).

B. Incorrect. First part is correct (See C.1)

Second part is incorrect (See C.2). Plausible if the applicant thinks that the procedural requirement of allowing the oil lift pump to run for at least two minutes is to satisfy a closing time delay interlock.

C. Correct. First part is correct. RCP oil pressure must be a minimum of 600 psig for the white light to come on. This may occur in as little as 1 minute or as long as 6 minutes, but the white light is not time dependent, it is only pressure dependent.

Second part is correct. The RCP breaker interlock is with the oil pressure switch not the 2 minute procedural requirement.

D. Incorrect. First part is incorrect (See A.1).

Second part is incorrect (B.2).

| | |
|---|---|
| K/A: **003A3.05** | Reactor Coolant Pump System (RCPS) - Ability to monitor automatic operation of the RCPS, including: RCP lube oil and bearing lift pumps |
| Importance Rating: | 2.7* 2.6 |
| Technical Reference: | FNP-1-SOP-1.1, Reactor Coolant System, Ver 47.2 |
| References provided: | None |
| Learning Objective: | RELATE AND IDENTIFY the operational characteristics including design features, capacities and protective interlocks for the components associated with the Reactor Coolant Pumps, to include the following (OPS-40301D02):<br>• Oil lift system |
| Question History: | MOD VOGTLE 12 |
| K/A match: | The only AUTO features of the RCP LO and Brg lift pump is the white light will come on when the pressure reaches 600 psig and then the permissive will clear at 600 psig allowing the RCP breaker to be closed. Applicant must be **able to monitor the white indicating light for the RCP oil lift pump** which indicates the discharge pressure of that pump is > 600 psig and have knowledge that when the light comes on, the permissive **automatically** allows the RCP circuit breaker being capable of closing due to oil pressure and is time. |
| SRO justification: | N/A |

3. 004K3.08 003

Unit 1 was operating at 100% power when the following occurred:

- The air supply to FCV-122, CHG FLOW REG, actuator has been severed and the valve has repositioned to its failed position.

Which ONE of the following completes the statement below?

FCV-122 is _(1)_ and RCP seal injection flow will _(2)_.

| | (1) | (2) |
|---|---|---|
| A. | CLOSED | LOWER |
| B. | CLOSED | RISE |
| C✓ | OPEN | LOWER |
| D. | OPEN | RISE |

**AOP-6.0 Table 1:**

| Component No. | Name | Failed Position |
|---|---|---|
| Q1E21V347 (1-CVC-FCV-122) | CHG FLOW REG | OPEN |

**ARP-1.4, DC4 - SEAL WTR INJ FLTR HI Δ P**

Probable Cause.

2. High seal injection flow rate.
3. Chg Flow Q1E21FCV122. (Also labeled Q1E21V347) failed closed.

**Distracter Analysis**

A. Incorrect. First part is incorrect (See C.1). Plausible if the applicant does recall the fail position of FCV-122.

Second part is correct (See C.2). Logical connection to the first part if the applicant believes that FCV-122 is upstream of the seal injection line and the closure of FCV-122 would stop seal injection flow.

B. Incorrect. First part is incorrect (See A.1).

Second part is incorrect (See C.2). Logical connection to the first part if the applicant thought that FCV-122 failed closed since it would be the correct seal injection response for this condition.

C. Correct First part is correct. FCV-122 fails open.

Second part is correct. The closure of FCV-122 will cause high seal injection flow and thus high filter DP due to all of the charging pump discharge flow being directed to the seal injection filter (See ARP-1.4, DC4 above). Conversely if the air line fails on FCV-122, the valve will fail open and a majority of the charging pump discharge flow will be directed to the normal charging path causing the seal injection flow to go down. (See P&ID D-175039, SH 6, Chemical and Vol Control System for system flow.)

D. Incorrect. First part is correct (See C.1).

Second part is incorrect (See C.2). Logical connection to the first part if the applicant assumes that more charging flow equates to more seal injection flow.

| | |
|---|---|
| K/A: **004K3.08** | Chemical and Volume Control System (CVCS) - Knowledge of the effect that a loss or malfunction of the CVCS will have on the following: RCP seal injection |
| Importance Rating: | 3.6 3.8 |
| Technical Reference: | P&ID D-175039, SH 6, Chemical and Vol Control System Ver 10<br>FNP-1-AOP-6.0, Loss of Instrument Air, Ver 40<br>FNP-1-ARP-1.4, DC4, Ver 53 |
| References provided: | None |
| Learning Objective: | RELATE AND IDENTIFY the operational characteristics including design features, capacities and protective interlocks for the components associated with the Chemical and Volume Control System, to include the components found on Figure 3, Chemical and Volume Control System and Figure 4, RCP-Seal Injection System (OPS-40301F02). |
| Question History: | SURRY 09 1ST AUDIT |
| K/A match: | The CVCS malfunction is that the air line to FCV-122 has been severed. Applicant must know how this **CVCS malfunction affects seal injection flow**. |
| SRO justification: | N/A |

4. 005A2.02 004

The following conditions exist on Unit 1:

- The operating crew is cooling down per UOP-2.2, Shutdown of Unit From Hot Standby to Cold Shutdown.
- MODE 5 has just been entered and the following conditions exist:
  - RCS temperature is 195°F.
  - BOTH 1A AND 1B RHR pumps are running in the cooldown mode.

Subsequently, PT-402, 1C LOOP RCS PRESS, fails HIGH.

Which one of the following describes the **minimum** required action(s), if any, to be performed per AOP-12.0, Residual Heat Removal Malfunction?

A. No actions are required.

B. ✔ Secure the 1A RHR pump ONLY.

C. Secure the 1B RHR pump ONLY.

D. Secure BOTH 1A AND 1B RHR pumps.

**FSD-181002:**
3.4.6.2 - All valves will shut automatically if RCS pressure increases to 700 psig. [...] The pressure inputs for this interlock are from PT402 for 8701A and B and from PT403 for 8702A and B to prevent isolation of both trains of RHR due to a single pressure transmitter failing high.

**AOP-12:**
**Entry Conditions**
1.4 Closure of loop suction valve

| | |
|---|---|
| Step 1. Check RHR loop suction valves OPEN | 1. Stop any RHR PUMP with closed loop - suction valve(s) |

**See Tech Spec 3.4.12**
Technical Specification 3.4.12, LTOP (Low Temperature Over Pressure Protection System requires two RHR suction relief valve with setpoints ≤ 450 psig when the temperature of one or more RCS cold legs is ≤ 325°F. If one or more of the RHR Loop suction valves closed, then this Technical Specification would not be met and Low Temperature Over Pressure Protection would not be satisfied.

**Distracter analysis**

A. Incorrect. See B. Plausible if applicant remembers that the RHR Loop suctions are opened and de-energized at some point but cannot recall that it is when RCS temperature is less than 180°F. If the valves were de-energized they would not shut so no action would be required. Also, the applicant could remember that PT-402 and 403 provide interlocks to OPEN the RHR loop suctions but NOT remember they also will close the valves on high pressure. This would make this a correct answer.

B. Correct. PT-402 failing high will close MOV-8701A and MOV-8701B which isolates the suction to the 1A RHR pump. AOP-12 requires the 1A RHR pump to be secured.

C. Incorrect. See B. Plausible if the applicant improperly believes that PT-402 affects the 1B RHR pump suction valves instead of 1A RHR pump suction valves. If PT-403 failed high, this would be the correct answer.

D. Incorrect. See B. Plausible since the RHR loop suction valves have interlocks to prevent opening them if certain parameters are not met (See reference material FSD A181002). PT-402 must be less than 402.5 psig in order to open MOV-8701A and MOV-8702A which are on OPPOSITE trains. If the applicant thought that the closing on high pressure works the same way as the opening interlocks this would be a correct answer since they would believe a suction valve in each train will close and both RHR pumps would be required to be secured.

| | |
|---|---|
| K/A: **005A2.02** | **Residual Heat Removal System (RHRS)** - Ability to (a) predict the impacts of the following malfunctions or operations on the RHRS, and (b) based on those predictions, use procedures to correct, control, or mitigate the consequences of those malfunctions or operations: Pressure transient protection during cold shutdown |
| Importance Rating: | 3.5 3.7 |
| Technical Reference: | FSD-A181002, Residual Heat Removal, Ver 44<br>FNP-1-AOP-12, Residual Heat Removal Malfunction, Ver 25<br>FNP Technical Specifications, Ver 190 |
| References provided: | None |
| Learning Objective: | EVALUATE plant conditions and DETERMINE if entry into AOP-12.0, RHR System Malfunction and/or STP-18.4, Containment Closure is required. (OPS-52520L02) |
| Question History: | MOD ANO 05 |
| K/A match: | The applicant has to predict **how the failure of the loop pressure transmitter affects the RHR system** in that it removes one of the required Low Temperature Over Pressure Protection System reliefs from service. The applicant will apply that prediction to **AOP-12 to get to** the **action required to mitigate this malfunction.** |
| SRO justification: | N/A |

5. 006K5.06 005

Unit 1 was operating at 100% power when the following conditions occurred:

- A LOCA is in progress.
- The operating crew is performing the actions of EEP-0.0, Reactor Trip or Safety Injection, and is at the step to "Check RCS intact".
- RCS pressure is 475 psig and lowering.

Which one of the following describes the current status of the ECCS system?

| | SI Accumulator Level | RHR Injection Flow |
|---|---|---|
| A. | Stable and on-scale | Zero |
| B.✔ | Dropping or off-scale low | Zero |
| C. | Dropping or off-scale low | Rising |
| D. | Stable and on-scale | Rising |

Desktop simulator IC-73 (100% power) - 10,000 gpm LOCA produced 477 psig in the RCS in ~17 min. It takes an estimated 15± minutes to get to the "Check RCS intact" step of EEP-1 which makes the value of RCS pressure valid.

**EEP-1**
**9.** Check if LSHI Pumps should be stopped.
**9.1** Check RCS pressure - GREATER THAN 275 psig **{435 psig}**

**EEB-1**
**ERP Step Text:** Check if LHSI Pumps should be stopped.
**Purpose:** To stop the low-head SI pumps if RCS pressure is above their shutoff head to prevent damage to the pumps
**Basis:** Upon safety injection initiation all safeguard pumps are started regardless of the possibility of high RCS pressure with respect to the low-head safety injection pump shutoff head. On low-head systems where the pump recirculates on a small volume circuit there is concern for pump and motor overheating. Shutdown of the pump and placement in the standby mode, when the RCS pressure meets the criteria outlined in this step, allows for future pump operability. If SI has not been previously reset and the low-head SI pumps should be stopped, SI should be reset prior to stopping the pumps. SI can be reset regardless of containment pressure.

**FSD - A181009**
**3.3.1.1 3** Safety injection accumulators shall function as passive safeguards components to rapidly inject [...] whenever the RCS pressure decreases below the tank cover gas pressure of 601 - 649 psig due to a loss of coolant accident

**Distracter Analysis**

A. Incorrect. First part is incorrect (See B.1). Plausible if the applicant is unfamiliar with the injection pressures of the accumulators. The

applicant may believe that RCS pressure is high enough to prevent accumulator injection.

Second part is correct (See B.2). Logical connection to the first part if the applicant recognizes that RHR injects at a lower pressure than the accumulators.

B. Correct.

First part is correct. FSD-A181009, 3.3.13. Safety injection accumulators shall function as passive safeguards components to rapidly inject [...] whenever the RCS pressure decreases below the tank cover gas pressure of 601- 649 psig due to a loss of coolant accident.

Second part is correct. At 500 psig in the RCS, the accumulators will have injected but the RCS pressure will be above the RHR shut off head pressure. EEP-1 uses 435 psig (Adverse, because containment pressure is > 4 psig) as the criteria for RHR pump shut off head. (See EEP-1 and EEB-1 above).

C. Incorrect.

First part is correct (See B.1).

Second part is incorrect (See B.2) Logical connection to the first part if the applicant is unfamiliar with the injection pressures of the RHR pumps. If the applicant knows that the accumulators are(have) injecting(ed), they may also assume that RCS pressure is low enough to allow RHR injection.

D. Incorrect.

First part is incorrect (See A.1).

Second part is incorrect (See B.2). Logical connection to the first part if the applicant is unfamiliar with the injection pressures of the RHR pumps. The applicant may believe that the RHR pumps inject before the accumulators.

The
K/A: **006K5.06** Emergency Core Cooling System (ECCS) - Knowledge of the operational implications of the following concepts as they apply to ECCS: Relationship between ECCS flow and RCS pressure

Importance Rating: 3.5 3.9

Technical Reference: FSD-A181009, CVCS/HHSI/Accumulators/RMWS, Ver 39
FNP-1-EEP-1.0, Loss of Reactor or Secondary Coolant, Ver 31
FNP-0-EEB-1.0, Specific Background Document for FNP-1/2-EEP-1.0, Ver 4

References provided: None

Learning Objective: RELATE AND IDENTIFY the operational characteristics including design features, capacities and protective interlocks for the components associated with the Emergency Core Cooling System, to include the components found on Figure 2, Accumulators, Figure 3, Refueling Water Storage Tank, and Figure 4, Emergency Core Cooling System (OPS-40302C02).

Question History: SUMMER 11

K/A match: The applicant is required to know **which ECCS components are injecting into the core (flow) based on RCS pressure.**

SRO justification: N/A

6. 006K6.18 006

Unit 1 has experienced a Reactor Trip and Safety Injection due to a faulted SG.
The following conditions exist:

- The operating crew is performing EEP-2.0, Faulted Steam Generator Isolation.
- SCMM is in the CETC mode.
- RCS pressure is 1900 psig and rising slowly.
- At the step for verifying SI termination criteria, the crew notes that PT-457, PRZR PRESS, has failed LOW.

Which one of the following completes the statements below?

Subcooling margin calculated by A Train ICCMS will _(1)_.

Subcooling margin calculated by B Train ICCMS will _(2)_.

| | (1) | (2) |
|---|---|---|
| A. | be affected | NOT be affected |
| B.✔ | NOT be affected | be affected |
| C. | be affected | be affected |
| D. | NOT be affected | NOT be affected |

**SOP-68:**
3.2 The normal display mode for the SMM is the “CETC” mode. This displays the margin to saturation (°F) using the highest core exit thermocouple (excluding upper head) **and the lowest pressure**. The “RTD” mode displays the margin to saturation (°F) using the hottest reactor coolant system (RCS) RTD (Th or Tc) and the lowest pressure. **The pressure inputs are from PT-402 and 403 and from PT-455 for A-train and PT-457 for B-train.**

**Distracter Analysis**

A. Incorrect. First part is incorrect (See B.1). Plausible if the applicant thinks that PT-457 inputs to 'A" train SMM.

Second part is incorrect (See B.2). Logical connection to the first part if the applicant recognizes that PT-457 is train related but assumes it inputs to the wrong train.

B. Correct. First part is correct. PT-457 inputs to 'B' Train so the 'A' Train is unaffected.

Second part is correct. PT-457 inputs to 'B' Train and the SMM uses the lowest pressure therefore the subcooling value of the 'B' Train will be affected (lower).

C. Incorrect. First part is incorrect (See B.1). Plausible if the applicant thinks that PT-455 and 457 input to both trains of SMM which is incorrect. If they did input to both trains, this would be a correct answer. PT-402 and 403 input to both trains. This is a common misconception.

Second part is correct (See B.2) A logical connection to the first part if the applicant thinks that PT-455 and 457 input to both trains of SMM instead of PT-402 and 403 which would make this a correct answer.

D. Incorrect. First part is correct (See B.1). Plausible if the applicant thinks that PT-455 inputs to 'A' Train and PT-456 inputs to 'B' Train instead of PT-457 which would make this a correct answer.

Second part is incorrect (See D.1). Logical connection to the first part based on D.1 discussion.

| | |
|---|---|
| K/A: **006K6.18** | Emergency Core Cooling System (ECCS) - Knowledge of the effect of a loss or malfunction on the following will have on the ECCS: Subcooling margin indicators |
| Importance Rating: | 3.6 3.9 |
| Technical Reference: | FNP-1-SOP-68.0, Inadequate Core Cooling Monitoring System, Ver 8.1 |
| References provided: | None |
| Learning Objective: | RELATE AND IDENTIFY the operational characteristics including design features, capacities and protective interlocks for the following components associated with the Inadequate Core Cooling Monitor System (OPS-52202E02):<br><br>• Subcooled Margin Monitor (SMM) |
| Question History: | NEW |
| K/A match: | At step 8 of EEP 2, the Shift Supervisor is required to evaluate plant conditions to determine if ECCS flow can be terminated. Part of this determination is evaluating subcooling. The applicant has to **know the effect of the loss of PT-457 on the subcooling margin monitors in order to be able to provide the Shift Supervisor the correct subcooling value.** |
| SRO justification: | N/A |

7. 007EA2.06 007

Unit 2 was operating at 2% power with a plant startup in progress per UOP-1.2, Startup of the Unit from Hot Standby to Minimum Load and the following conditions occurred:

**At 1000:**

- DG-15-2, 2B S/U XFMR TO 2G 4160V Bus, trips open.

**At 1005:**

- DF-01-2, 2A S/U XFMR TO 2F 4160V Bus, trips open.

Which one of the following completes the statements below **at 1006** with no operator actions taken?

The Reactor Trip breakers will be _(1)_.

DRPI rod bottom lights _(2)_ be LIT.

| | (1) | (2) |
|---|---|---|
| A. | OPEN | WILL |
| B. | OPEN | will NOT |
| C.✓ | CLOSED | WILL |
| D. | CLOSED | will NOT |

**FSD-181007**
Figure 2 Sheet 2 shows all signals that open the reactor trip breakers and none are present in this scenario.

**Unit 2 Load list:**
2A CRDM MG Set powered from 600V LC 2D which is power from 4160V 2F.
2B CRDM MG Set powered from 600V LC 2E which is power from 4160V 2G.

Rod Position Indication System (DRPI) has two power sources:
MCC 2D - Normal - is NOT powered from a DG.
MCC 2B - Alternate - IS powered from a DG and is the source which DRPI is NORMALLY aligned.

**<u>Distracter analysis</u>**

A. Incorrect. First part is incorrect (See D.1). Plausible since the applicant may believe that the loss of power to both trains of safety related power causes the reactor trip breakers to open.

Second part is correct (See D.2). Logical connection to the first part since the rod bottom lights would be lit if the applicant thought the reactor trip breakers opened.

B. Incorrect First part is incorrect (See A.1).

Second part is incorrect (See C.2). Plausible if the applicant believes that Rod Position Indication System (DRPI) is aligned to its normal power supply which would make this a correct answer. DRPI comes off B Train power and will lose power for a time while the 2B DG starts and loads. Then the rod bottom lights will be LIT.

C. Correct. First part is correct. When the loss of the 2F bus occurs, the 2A CRDM MG Set will de-energize causing the rods to fall into the core. No reactor trip setpoints are exceeded at 1006 so the Reactor trip Breakers will not open.

Second part is correct. Rod Position Indication System (DRPI) is normally aligned to its ALTERNATE power supply which is a vital bus. When the DG re-energizes the 2G bus, the rod bottom lights will be LIT.

D. Incorrect. First part is correct (See C.1).

Second part is incorrect (See B.2). Logical connection to the first part for two reasons. If the applicant thought there was no trip (rods did not fall into the core) this would be the correct conclusion. If the applicant knew that the trip breakers would not open they could still believe the plausibility of B.2.

| | |
|---|---|
| K/A: **007EA2.06** | Reactor Trip - Ability to determine or interpret the following as they apply to a reactor trip: Occurrence of a reactor trip |
| Importance Rating: | 4.3 4.5 |
| Technical Reference: | FNP-2-SOP-41.0, Control Rod Drive and Position Indication System, Ver 35.1<br>A351199, Unit 2 Electrical Load List, Ver 61 |
| References provided: | None |
| Learning Objective: | RECALL AND DESCRIBE the operation and function of the following reactor trip signals, permissives, control interlocks, and engineered safeguards actuation signals associated with the Reactor Protection System (RPS) and Engineered Safeguards Features (ESF) to include setpoint, coincidence, rate functions (if any), reset features, and the potential consequences for improper conditions to include those items in the following tables (OPS-52201I07):<br><br>• Table 1, Reactor Trip Signals |
| Question History: | MOD FNP EXAM BANK |
| K/A match: | The applicant is required to **interpret plant conditions and determine if a reactor trip has occurred**. |
| SRO justification: | N/A |

8. 007K5.02 008

Unit 1 is in Mode 5 and forming a pressurizer steam space (drawing a bubble) per UOP-1.1, Startup of Unit from Cold Shutdown to Hot Standby. The vacuum refill procedure will NOT be performed. The following conditions exist:

- RCS pressure is being maintained at 325-375 psig.
- 1B RCP is running.
- 'A' Train RHR is on service with low pressure letdown aligned.
- RCS is in solid plant pressure control.
- Pressurizer temperature is 178°F and slowly rising.
- All PRZR heaters have been energized.

Which one of the following completes the statements below?

Per UOP-1.1, the pressurizer is at saturation conditions when _(1)_ increases.

During this evolution, PRT level will _(2)_.

| | (1) | (2) |
|---|---|---|
| A. | charging flow | remain constant |
| B.✔ | letdown flow | remain constant |
| C. | letdown flow | rise |
| D. | charging flow | rise |

**UOP-1.1:**
**5.11** WHEN pressurizer temperature increases to the saturation temperature for 375 psig (approximately 442°F) as indicated by **increasing RCS pressure or letdown flow**, THEN **establish** a steam space in the pressurizer as follows

**5.11.5** WHEN VCT level increases to 81%, THEN **verify** VCT HI LVL DIVERT VLV Q1E21LCV115A in the fully diverted position.

**Distracter analysis**

A. Incorrect. First part is incorrect (See B.1). Plausible if the applicant thinks that FCV-122 is in auto and will open to raise charging flow in response to the RCS pressure rise. FCV-122 operates in automatic based on pressurizer level and median Tavg (See AOP-100 Section 1.2 Figure 1 in reference material)

Second part is correct (See B.2).

B. Correct. First part is correct. UOP-1.1: 5.11 WHEN pressurizer temperature increases to the saturation temperature for 375 psig (approximately 442°F) as indicated by **increasing** RCS pressure or **letdown flow**, THEN establish a steam space in the pressurizer as follows:

Second part is correct. LCV-115A diverts to the RHT.

C. Incorrect. First part is correct (See B.1).

Second part is incorrect (See above). Plausible if the applicant improperly believes that letdown diverts to the PRT vice RHT.

D. Incorrect. First part is incorrect (See A.1).

Second part is incorrect (See C.2).

| | |
|---|---|
| K/A: **007K5.02** | Pressurizer Relief Tank/Quench Tank System (PRTS) - Knowledge of the operational implications of the following concepts as the apply to PRTS: Method of forming a steam bubble in the PZR |
| Importance Rating: | 3.1 3.4 |
| Technical Reference: | FNP-1-UOP-1.1, Startup of Unit from Cold Shutdown to Hot Standby, Ver 94.3 |
| References provided: | None |
| Learning Objective: | DEFINE AND EVALUATE the operational implications of normal / abnormal plant or equipment conditions associated with the safe operation of the Pressurizer System components and equipment, to include the following (OPS-40301E07):<br>• Normal Control Methods |
| Question History: | MOD FNP 12 |
| K/A match: | The applicant has to know the **effect on the PRT level (operational implications) during the formation of a steam bubble in the pressurizer**. |
| SRO justification: | N/A |

9. 008AK1.01 009

Unit 2 was operating at 100% power when a Reactor Trip occurs and the following conditions exist:

- Q2B13PSV8010A, PZR SAFETY, has failed OPEN.
- Pressurizer pressure is 1020 psig.
- PRT pressure rises to 55 psig.
- Core Exit Thermocouples read 560°F.

Which one of the following completes the statements below?

Temperature on TI-469, SAFETY VLVS, will indicate approximately _(1)_.

Pressurizer level will be _(2)_.

**Reference provided**

| | (1) | (2) |
|---|---|---|
| A. | 546°F | rising |
| B. | 546°F | lowering |
| C. | 320°F | lowering |
| D✔ | 320°F | rising |

WOG Executive Guideline - During situations where a steam vent path is established from the pressurizer vapor space and where RCS subcooling is not indicated, pressurizer level may not be a true indication of RCS inventory. This can result from steam generated in the reactor vessel, passing through the pressurizer surge line and preventing the water inventory of the pressurizer from draining into the RCS loops. This holdup of water can result in a stable or even increasing indicated pressurizer level while RCS water inventory is actually decreasing. Pressurizer level should be relied on only with hot leg or core exit subcooling present. In SI termination steps in the ERGs, pressurizer level is only checked after adequate RCS subcooling is confirmed.

**Distracter analysis**

A. Incorrect. First part is incorrect (See D.1). Plausible if applicant believes that the temperature of the steam in the Pressurizer is the same temperature as the steam entering the PRT. 546°F is the approximate saturation temperature for 1035 psia. This was the error made at the TMI accident.

Second part is correct (See D.2).

B. Incorrect. First part is incorrect (See A.1).

Second part is incorrect (See D.2). This is initially true but in the scenario given, subcooling is lost in the core and a bubble is formed in the vessel upper head. This will result in the Pzr level rising instead of lowering as one would expect. Plausible since during a LOCA event the normal response is that Pzr level decreases.

C. Incorrect. First part is correct. (See D.1)

Second part is incorrect (See B.2).

D. Correct. First part is correct. Using the steam tables and the following pressures:

1020 psig + 15 = 1035 psia (RCS)
55 psig + 15 = 70 psia (PRT)

~320°F

Second part is correct. Since the break is at the top of the pressurizer, the pressurizer level will be rising. This scenario was run on the desktop simulator. Pressurizer level was rising at 1020 psig.

| | |
|---|---|
| K/A: **008AK1.01** | Pressurizer (PZR) Vapor Space Accident (Relief Valve Stuck Open) - Knowledge of the operational implications of the following concepts as they apply to a Pressurizer Vapor Space Accident: Thermodynamics and flow characteristics of open or leaking valves |
| Importance Rating: | 3.2 3.7 |
| Technical Reference: | Properties of saturated and superheated steam, 1967 Westinghouse Owners Group, ERG Executive Guideline. |
| References provided: | Steam tables |
| Learning Objective: | SELECT AND ASSESS the Pressurizer System instrument/equipment response expected when performing Pressurizer System evolutions, including the Normal Condition, the Failed Condition, Associated Alarms, Associated Trip Setpoints, to include the components found on Figure 3, Pressurizer and Pressurizer Relief Tank (OPS-52101E07) |
| Question History: | MOD HARRIS 09 |
| K/A match: | Applicant has to **determine the safety valve tailpeice temperature using steam tables (Thermodynamics and flow characteristics)** and **pressurizer level trend (operational implications) during a stuck open PORV condition.** |
| SRO justification: | N/A |

10. 008K2.02 010

Unit 2 is operating at 100% power when the following occurs:

- A simultaneous dual Unit LOSP occurs:

Which one of the following completes the statement below?

The _(1)_ CCW pump is being powered by the _(2)_ DG.

| | (1) | (2) |
|---|---|---|
| A. | 2A | 1-2A |
| B. | 2A | 1C |
| C. | 2C | 1-2A |
| D.✔ | 2C | 1C |

2C CCW pump is power from the 2F 4160V bus which is powered from the 1C DG in the above scenario.

**Distracter analysis**

A. Incorrect. First part is incorrect (See D.1). Plausible since, with the exception of spent fuel pool cooling, every other train related pump with an 'A' designation is an 'A' train pump. The applicant may not recall that the CCW system is "backwards"

Second part is incorrect (See C.2). Plausible because if there was an LOSP on Unit 2 only, the 1-2A DG would be assigned to the Unit 2 'A' train busses. However, there is a DUAL UNIT LOSP and the 1C DG gets assigned to the Unit 2 'A' Train busses. Applicants often get confused as to the assignment of 'A' train DGs during various loss of power scenarios.

B. Incorrect. First part is incorrect (See A.1).

Second part is correct (See D.2).

C. Incorrect. First part is correct (See D.1).

Second part is incorrect (See A.2).

D. Correct. First part is correct. FSD A-181000: 3.1.5.4 [...] Without offsite power available and with or without the presence of SIAS signal, the on-service train CCW pump shall trip, then both train CCW pumps start by the diesel generator loading sequencers (ESS or LOSP).

The 2C CCW pump is the 'A' train pump therefore it will be powered from the 1C DG.

Second part is correct. Under the conditions in the stem, the 1C DG will tie to Unit 2 and supply the 2F, 2K and 2H busses (See FSD A181005 in reference material).

| | |
|---|---|
| K/A: 008K2.02 | Component Cooling Water System (CCWS) - Knowledge of bus power supplies to the following: CCW pump, including emergency backup |
| Importance Rating: | 3.0* 3.2* |
| Technical Reference: | FSD-A181000, Component Cooling Water, Ver 24<br>FSD-A181005, Diesel Generators, Ver 44 |
| References provided: | None |
| Learning Objective: | NAME AND IDENTIFY the Bus power supplies, for those electrical components associated with the CCW System, to include the following: (OPS-40204A04): |
| Question History: | NEW |
| K/A match: | Requires the applicant to **know the normal bus power supply to the CCW pumps** in order to **know the correct DG that is its emergency backup power supply.** |
| SRO justification: | N/A |

11. 009EK2.03 011

The following conditions exist on Unit 1:

- An RCS leak is in progress.
- RCS pressure is 1600 psig and stable.
- Containment pressure is 3.1 psig and slowly rising.
- The crew has just transitioned to ESP-1.2, Post LOCA Cooldown and Depressurization.

Which one of the following completes the statement below?

The **minimum** SG narrow range water level must be greater than _(1)_ to _(2)_.

A. 1) 31%

2) ensure SG tubes are covered to promote reflux boiling

B. 1) 48%

2) ensure SG tubes are covered to promote reflux boiling

C. ✓ 1) 31%

2) ensure adequate SG inventory to provide a secondary heat sink

D. 1) 48%

2) ensure adequate SG inventory to provide a secondary heat sink

**ESB-1.2**
**ERP Step Text** - Check intact SG levels
**Purpose**: To ensure adequate feed flow or SG inventory for secondary heat sink requirements

**ESP-1.2**
8. Check any intact SG narrow range level - GREATER THAN 31% {48%}

**<u>Distracter analysis</u>**

A. Incorrect. First part is correct (See C.1).

Second part is incorrect (See C.2). Plausible if the applicant does not understand the mechanism of reflux boiling and improperly assumes this leak rate is sufficient to allow reflux boiling to be the method of heat removal at some time during the event. Reflux boiling is mentioned in ECP-1.1, Loss of Emergency Cooling Recirculation as a method of cooling if the RCS is NOT full.

B. Incorrect. First part is incorrect (See C.1). Plausible if the applicant applies adverse containment numbers as this would be the correct level.

Second part is incorrect (See A.2).

C. Correct. First part is correct. With containment pressure < 4 psig, adverse numbers are not warranted. The required SGWL is >31% (See Step 8 of ESP-1.2 above).

Second part is correct. This is the correct reason for maintaining SGWL above 31% (See ESB-1.2 above). Additionally, at this leak rate, the RCS will remain full as the HHSI pump flow exceeds break flow and reflux cooling will not occur.

(Ran on desktop simulator - IC 073, 200 gpm leak rate, trip and SI at 2000 psig Pzr pressure -- SI flow rate ~230 gpm at 2200 psig)

D. Incorrect. First part is incorrect (See B.1).

Second part is correct (See C.2).

| | |
|---|---|
| K/A: **009EK2.03** | Small Break LOCA - Knowledge of the interrelations between the small break LOCA and the following: S/Gs |
| Importance Rating: | 3.0 3.3* |
| Technical Reference: | FNP-1-ESP-1.2, Post LOCA Cooldown and Depressurization., Ver 24.<br>FNP-1-ESB-1.2, Specific Background Document for FNP-1/2-ESP-1.2, Ver 2.1 |
| References provided: | None |
| Learning Objective: | STATE AND EXPLAIN the basis for all Cautions, Notes, and Actions associated with ESP-1.2, Post LOCA Cooldown and Depressurization. (OPS-52531F03) |
| Question History: | VOGTLE 10 |
| K/A match: | The applicant must know how the **SGs interrelate to the RCS during a Small Break LOCA in that they are required to provide a secondary heat sink for the RCS.** |
| SRO justification: | N/A |

12. 010A2.01 012

Unit 1 was operating at 100% power when a Reactor Trip and LOSP occurred.
The following conditions exist:

- The 1A PZR HTR GROUP BACKUP handswitch is in AUTO.
- RCS pressure is 2000 psig.

Which one of the following correctly describes Pressurizer Heater operation per ESP-0.1, Reactor Trip Response?

A. The 1A PZR Heaters will have power available, **NO** actions are required to energize them.

B. ✔ The 1A PZR Heaters will have power available **AND** manual actions on the MCB are required to energize them.

C. The 1A PZR Heaters will **NOT** have power available. Manual actions are required to align power to them on the EPB but **NO** other actions are required to energize them.

D. The 1A PZR Heaters will **NOT** have power available. Manual actions are required to align power to them on the EPB **AND** manual actions on the MCB are required to energize them.

**ESP-0.1**
**Attachment 3**
**1.10.4** WHEN pressurizer heater group 1A operation is desired,
THEN place HTR GRP 1A BLOCKING BYPASS SW to BYPASS.

**1.10.5** IF required,
THEN manually energize pressurizer heater group 1A.

**Distracter analysis**

A. Incorrect. See B. Plausible if the applicant fails to recall that by procedure, the heater switch is taken to off, then the blocking bypass switch is taken to BYPASS and the heater control switch placed in ON to energize the heaters.

B. Correct. The BIF LOSP sequencer reenergizes the emergency section of 600v LC A on an LOSP at step 6. By procedure, the heater switch is taken to off, then the blocking bypass switch is taken to BYPASS and the heater control switch placed in ON to energize the heaters.

C. Incorrect. See B. Plausible if the if the applicant confuses the 1A with the 1B PZR heaters which require EPB alignment and fails to recall that by procedure, the heater switch is taken to off, then the blocking bypass switch is taken to BYPASS and the heater control switch is placed in ON to energize the heaters.

D. Incorrect. See B. Plausible if the if the applicant confuses the 1A with the 1B PZR heaters which require EPB alignment but recognizes the heater switch is taken to off, then the blocking bypass switch is taken to BYPASS and the heater control switch placed in ON to energize the heaters.

| | |
|---|---|
| K/A: **010A2.01** | Pressurizer Pressure Control System (PZR PCS) - Ability to (a) predict the impacts of the following malfunctions or operations on the PZR PCS; and (b) based on those predictions, use procedures to correct, control, or mitigate the consequences of those malfunctions or operations: Heater failures |
| Importance Rating: | 3.3 3.6 |
| Technical Reference: | FNP-1-ESP-0.1, Reactor Trip Response, Ver 32<br>FNP-1-EEP-0.0, Reactor Trip or Safety Injection, Ver 44 |
| References provided: | None |
| Learning Objective: | NAME AND IDENTIFY the Bus power supplies, for those electrical components associated with the Pressurizer Pressure and Level Control System, to include those items in Table 4- Power Supplies (OPS-52201H04). |
| Question History: | FNP EXAM BANK |
| K/A match: | **The LOSP causes the pressurizer heaters to become unavailable for use (failed) until operator action is taken to mitigate their loss**. The applicant must know how to re-energize the PRZR heaters when they are lost during an LOSP. |
| SRO justification: | N/A |

13. 011EK2.02 013

Unit 1 has experienced a Loss of Off-site Power and a Large Break LOCA. The following conditions exist:

- ESP-1.3, Transfer to Cold Leg Recirculation, has been completed.

Subsequently, the Shift Supervisor directs the OATC to perform ESP-1.4, Transfer to Simultaneous Cold and Hot Leg Recirculation and the following occurs:

- Power is lost to the 1G 4160V Bus and will not be restored for 18 hours.

Which one of the following completes the statement below?

At the completion of ESP-1.4, the running LHSI pump will be aligned for _(1)_ leg recirculation and the running HHSI pump will be aligned for _(2)_ leg recirculation.

| | (1) | (2) |
|---|---|---|
| A. | HOT | COLD |
| B. | COLD | COLD |
| C. | HOT | HOT |
| D✓ | COLD | HOT |

ESP-1.4 intends to align LHSI to HOT leg and leave HHSI aligned for Cold leg recirculation. However, during realignment, if any portion of the LHSI system cannot be reconfigured (Step 1), then the system is returned to its original lineup of Cold leg recirc and the available HHSI train is aligned for HOT leg recirculation. Step 4 has the operator assess the re-alignment and if the final requirement is not met, they are directed to Step 1 and contacting the Technical Support Center for guidance

We have recently developed a JPM that causes the alignment to be in a cold/cold or hot/hot alignment since some failures can lead you there. That is precisely the reason the procedure will direct you to the TSC staff if a final alignment other than cold/hot or hot/cold is reached by the end of the procedure.

The final alignment of LHSI and HHSI can be confusing when coupled with power losses and/or equipment failures.

**Distracter analysis**

A. Incorrect. First part is incorrect (See D.1). Plausible since the applicant may believe the procedure allows only one train of LHSI to be aligned to the Hot Leg. This would be correct if it were HHSI.

Second part is incorrect (See B.2). Plausible if the applicant believes that if one train cannot be realigned then neither will be aligned. This would be correct if it were LHSI.

B. Incorrect. First part is correct (See D.1)

Second part is incorrect (See A.2).

C. Incorrect. First part is incorrect (See A.1).

Second part is correct (See D.2). Plausible since when power is lost or equipment malfunctions, there are allowances to come back to steps in the procedure and perform them when power is restored and/or equipment repaired such as in ESP-1.3 when the charging suction and discharge header MOVs are aligned. Any alignment is possible in this procedure once malfunctions occur.

D. Correct. First part is correct. Per ESP-1.4 Step 1, if both trains of LHSI cannot be aligned to Hot Leg recirc then both trains are left aligned to cold leg recirc.

Second part is correct. ESP-1.4 Step 2 will align the A train HHSI to Hot Leg recirc and Step 3 will leave B train in its original alignment.

| | |
|---|---|
| K/A: **011EK2.02** | Large Break LOCA - Knowledge of the interrelations between the Large Break LOCA and the following: Pumps |
| Importance Rating: | 2.6* 2.7* |
| Technical Reference: | FNP-1-ESP-1.4, Transfer To Simultaneous Cold and Hot Leg Recirculation, Ver 16. |
| References provided: | None |
| Learning Objective: | EVALUATE plant conditions and DETERMINE if any system components need to be operated while performing [...] (2) ESP-1.4, Transfer to Simultaneous Cold Leg and Hot Leg Recirculation. (OPS-52531G06) |
| Question History: | FNP EXAM BANK |
| K/A match: | The applicant is required to know the **interrelation between the RHR/Charging Pumps and the RCS during a Large Break LOCA. Based on the scenario given, the applicant must determine the final pump alignment.** |
| SRO justification: | N/A |

14. 011K2.02 014

Unit 1 is operating at 100% power when the 1E 4160V bus becomes de-energized due to an electrical fault.

Which one of the following completes the statement below?

Pressurizer heater groups ____ have lost their normal power supply.

A. 1C and 1D ONLY

B. 1A, 1C and 1D ONLY

C. ✓ 1B and 1E ONLY

D. 1B, 1D and 1E ONLY

Load
Pressurizer Heater Group A 600V LC A (Normal) 4160V D
**Pressurizer Heater Group B 600V LC C (Normal) 4160V E**
Pressurizer Heater Group C 600V LC M 4160V D
Pressurizer Heater Group D 600V LC M 4160V D
**Pressurizer Heater Group E 600V LC N (Unit 1 and 2) 4160V E**

**Distracter analysis**

A. Incorrect. See C. Plausible since these heaters are powered from the same LC. The applicant may believe that this is the only LC affected by the power loss. Although 1A heaters are also powered from the same 4160V Bus as these heaters, the applicant may believe the 1A heaters are powered from the Emergency Bus (1F) since they are sequenced on after an LOSP.

B. Incorrect. See C. Plausible since this would be the impact for the loss of 1D 4160V bus and the applicant may think theses heaters are supplied by 1E 4160V bus.

C. Correct. Per Unit 1 Electrical Load List:
1E 4160V Bus supplies 1C Load Center (LC) and 1N LC.
1C LC - 1B pressurizer heaters.
1N LC - 1E pressurizer heaters

D. Incorrect. See C. Plausible if the applicant knows that 2 sets of heaters are powered from the same LC but cannot correctly recall which ones. The 1B heaters is a partially correct answer and would be included if the applicant thinks these heaters are powered from the same 4160V bus as the 1B heaters.

| | |
|---|---|
| K/A: **011K2.02** | Pressurizer Level Control System (PZR LCS) - Knowledge of bus power supplies to the following: PZR heaters |
| Importance Rating: | 3.1 3.2 |
| Technical Reference: | A506250, Unit 1 Electrical Load List, Ver 74.0 |
| References provided: | None |
| Learning Objective: | NAME AND IDENTIFY the Bus power supplies, for those electrical components associated with the Pressurizer Pressure and Level Control System, to include those items in Table 4- Power Supplies (OPS-52201H04). |
| Question History: | NEW |
| K/A match: | Applicant is required to **know the power supplies to the pressurizer heaters** in order to determine which ones have lost power. The power supply has to go back to the 4160V bus so the applicant also has to know the LC supplies as well. |
| SRO justification: | N/A |

15. 012A4.06 015

The following conditions exist on Unit 1:

- A loss of 'A' Train Auxiliary Building 125V DC Bus has occurred.

Which one of the following completes the statement below?

Placing the MCB Reactor Trip handswitch in TRIP would ____ if they were closed.

A. ✔ open **ALL** reactor trip and bypass breakers

B. **ONLY** open the 'B' reactor trip breaker and the 'B' reactor trip bypass breaker

C. **ONLY** open the 'B' reactor trip breaker and the 'A' reactor trip bypass breaker

D. open **BOTH** reactor trip breakers but **NOT** open either reactor trip bypass breaker

**FSD-A181007:**
**3.3.2 pg 3-10**
The **first method** of tripping the breaker (i.e., reactor trip or bypass breakers) is by a loss or drop of rated voltage to the **Undervoltage Relay (UV**). **The relay is normally energized from the 48 volt DC from the RPS.** When the voltage is removed by an automatic reactor trip signal, the relay is de-energized and releases the UV trip lever, which actuates the trip shaft, causing the breaker to unlatch from the closed position.

The **second method** of tripping the trip shaft is by the shunt trip lever when the normally de-energized shunt trip (SHTR) coil is energized. When energized, the **SHTR coil is powered from the 125 volt DC system** used to close the reactor trip and bypass breaker closing circuits.

**Distracter analysis**

A. Correct. Without 'A' train DC, the UV coils from the "A' Train Reactor Protection System (RPS) will still open 'A' Trip and 'B' Bypass breakers. 'B' train RPS deenergizes the UV coils for 'B' Trip and 'A' Bypass breakers. 'B' Train Aux Building DC will open the 'B' Trip breaker.

B. Incorrect. See A. Plausible if the applicant did not recall that the UV coils from RPS will trip ALL Trip and Bypass breakers. Since both listed breakers are 'B' breakers, this adds to plausibility due to the applicant thinking the 'B' train is unaffected and still would cause a reactor trip if the system worked this way.

C. Incorrect. See A. Plausible since this is how the RPS opens the Trip and Bypass breakers. The applicant may recall that this is how the RPS works but not realize that the loss of 'A' Train DC has no effect on the RPS.

D. Incorrect. See A. Plausible if the applicant thinks that the Trip breakers are tripped by RPS and the Bypass breakers from Aux Building DC. Since the Shunt trip coils on the Bypass breakers can ONLY be operated locally, the applicant may think that without DC the Bypass breakers will not open.

| | |
|---|---|
| K/A: **012A4.06** | Reactor Protection System (RPS) - Ability to manually operate and/or monitor in the control room: Reactor trip breakers |
| Importance Rating: | 4.3 4.3 |
| Technical Reference: | FSD-A181007 Reactor Protection System, Ver 18<br>D-177198, Sheet 2, Ver 3 |
| References provided: | None |
| Learning Objective: | RECALL AND DESCRIBE the operation and function of the following reactor trip signals, permissives, control interlocks, and engineered safeguards actuation signals associated with the Reactor Protection System (RPS) and Engineered Safeguards Features (ESF) to include setpoint, coincidence, rate functions (if any), reset features, and the potential consequences for improper conditions to include those items in the following tables (OPS-52201I07):<br><br>• Table 1, Reactor Trip Signals |
| Question History: | FNP 10 |
| K/A match: | Requires the applicant to **monitor the effect on the Reactor Trip and Bypass Breaker Positions due to a loss of DC when they are manually tripped (operated).** |
| SRO justification: | N/A |

16. 013G2.1.19 016

**The Integrated Plant Computer Display on the following page is provided for evaluation of this question.**

Unit 1 has experienced a reactor trip and the following conditions exist:

- The operating crew is verifying the immediate operator actions per EEP-0.0, Reactor Trip or Safety Injection.
- MLB-1, 1-1 and 11-1, SAFETY INJECTION, are NOT LIT.

The STA reports the following indications on the Plant Computer:

- PT0455 PRESSURIZER PRESSURE CHAN 1 is 1841 psig.
- PT0456 PRESSURIZER PRESSURE CHAN 2 is 1855 psig.
- PT0457 PRESSURIZER PRESSURE CHAN 3 is 1845 psig.
- PT0444A PRESSURIZER PRESSURE CHAN 4 is 1857 psig.
- PT0445A PRESSURIZER PRESSURE CHAN 5 is 1855 psig.
- PT0464 STEAM HEADER PRESSURE is 6.4 psig.

Which one of the following completes the statements below?

A Safety Injection _(1)_ required.

MSIV-3370A, B and C _(2)_ OPEN.

**Reference Provided**

| | (1) | (2) |
|---|---|---|
| A.✔ | IS | are NOT |
| B. | IS | ARE |
| C. | is NOT | are NOT |
| D. | is NOT | ARE |

**EEP- 0.0 -**
III. The following are symptoms that require safety injection, if one has not occurred:

| SI Signal | Instrumentation | Setpoint | Coinc |
|---|---|---|---|
| 1. Pressurizer pressure low | PT 455, 456, 457 | 1850psig | 2/3 |

**FSD-A181007 - Pg 2-26**
The Main Steam Line Isolation is initiated by the following:
b. Low steam pressure; = 585 psig on 2/3 S.G.

**Distracter Analysis**

A. Correct. First part is correct.

| SI Signal | Instrumentation | Setpoint | Coinc |
|---|---|---|---|
| 1. Pressurizer pressure low | PT 455, 456, 457 | 1850psig | 2/3 |

Second part is correct. Even though MSIV-3369A/B/C indicate OPEN, the downstream steam header pressure is 6.4 psig while the upstream pressure is >900 psig on all SGs, MSIV-3370A/B/C must be closed even though they are not modeled on the IPC.

B. Incorrect. First part is correct (See A.1)

Second part is incorrect (See A.2). Plausible if the applicant fails to evaluate steam pressure and assumes that since MSIV-3369A/B/C are open then MSIV-3370A/B/C must also be open.

C. Incorrect. First part is incorrect (See A.1). Plausible if the applicant has the misconception that the control channels, PT 444A and 445A are used to evaluate pressure instead of the protection channels PT-455, 456 and 457.

Second part is correct (See A.2).

D. Incorrect. First part is incorrect (See C.1).

Second part is incorrect (See B.2).

| | |
|---|---|
| K/A: **013G2.1.19** | Engineered Safety Features Actuation System (ESFAS) - Ability to use plant computers to evaluate system or component status |
| Importance Rating: | 3.9 3.8 |
| Technical Reference: | FNP-1-EEP-0.0, Reactor Trip or Safety Injection, Ver 44<br>FSD - A181007, Reactor Protection System, Ver 18 |
| References provided: | Screen Image of the Integrated Plant Computer |
| Learning Objective: | DEFINE AND EVALUATE the operational implications of normal / abnormal plant or equipment conditions associated with the safe operation of the Emergency Core Cooling System components and equipment, to include the following (OPS-40302C07):<br>[...]<br>• Automatic actuation including setpoint ( example SI, Phase A, Phase B, MSLIAS, LOSP, SG level)<br>[...]<br>• Actions needed to mitigate the consequence of the abnormality |
| Question History: | NEW |
| K/A match: | Applicant must **evaluate a set of data from the plant computer and based on that determine if ESFAS system actuation is necessary.** |
| SRO justification: | N/A |

013G2.1.19 P 016

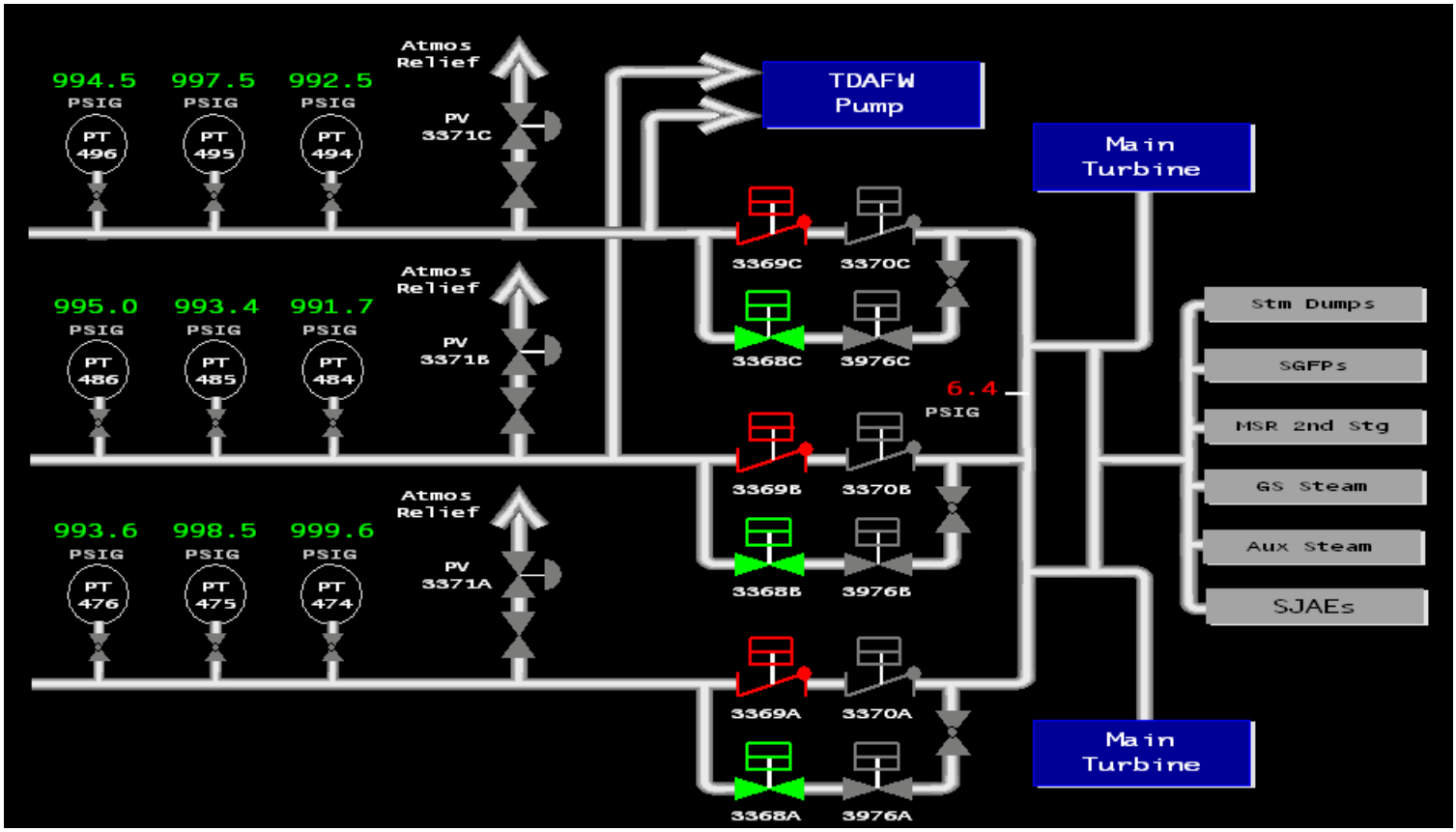

17. 014K5.01 017

Unit 1 is performing a reactor startup per UOP-1.2, Startup Of Unit From Hot Standby To Minimum Load, when the following conditions occurred:

- The OATC pulled Control Bank D to 100 Steps by Step Demand Counter.
- Rod B8 was noted to be indicating 54 Steps by DRPI.

Which one of the following completes the statements below?

Rod B8's position is _(1)_ .

Per Tech Spec Bases 3.1.7, Rod Position Indication, _(2)_ is(are) the most reliable indication.

A. 1) exactly 100 steps

2) the group step counters

B. 1) approximately 100 steps

2) the group step counters

C. 1) exactly 54 steps

2) DRPI

D. ✔ 1) approximately 54 steps

2) DRPI

The Bank Demand Position Indication System counts the pulses from the Rod Control System that move the rods. There is one step counter for each group of rods. Individual rods in a group all receive the same signal to move and should, therefore, all be at the same position indicated by the group step counter for that group. The Bank Demand Position Indication System is considered highly precise (± 1 step or ± ? inch). **If a rod does not move one step for each demand pulse, the step counter will still count the pulse and incorrectly reflect the position of the rod.**

**The DRPI System provides a highly accurate indication of actual control rod position**, but at a lower precision than the step counters. This system is based on inductive analog signals from a series of coils spaced along a hollow tube with a center to center distance of 3.75 inches, which is 6 steps. To increase the reliability of the system, the inductive coils are connected alternately to data system A or B. Thus, if one system fails, the DRPI will go on half accuracy with an effective coil spacing of 7.5 inches, which is 12 steps. Therefore, the normal indication accuracy of the DRPI System is ± 4 steps (all coils operable and 1 step added for manufacturing and temperature tolerances), and the maximum uncertainty is ± 10 steps (only one data system A or B coils operable). With an indicated deviation of 12 steps between the group step counter and DRPI, the maximum deviation between actual rod position and the demand position could be 22 steps.

**Distracter analysis**

A. Incorrect. First part is incorrect (See D.1). Plausible if the applicant does not recall that the Step Demand Counter only counts electrical impulses and thinks it actually measures rod location.

Second part incorrect (See D.2). Plausible if the applicant thinks that since the group step counters are the most precise indication, they are the most reliable.

B. Incorrect. First part is incorrect (See D.1). Plausible if the applicant does not recall that the Step Demand Counter only counts electrical impulses. Each bank has 2 Step Demand Counters that step in 1 step increments. Control Bank D Group 1 will move 1 step then Control Bank D Group 2 will move one step. If bank 1 moves 1 step and the rod control switch is released before bank 2 moves, bank 1 would be at 100 steps and bank 2 would be at 99 steps. This is commonly known as $99^{1/2}$ steps. The applicant may reason that this is a potential reason to call rods by step counter as approximate.

Second part is incorrect (See A.2).

C. Incorrect First part is incorrect (See D.1). Plausible since the DRPI lights change only every 6 steps and 54 steps is a DRPI display light location. The applicant may think that since a DRPI display light is lit, the rod is exactly at that position.

Second part is correct (See D.2).

D. Correct. First part is correct. Since DRPI measures actual rod position based on the location of the rod in reference to the measurement coils and the step counter only counts electrical pulses, the rod is at ~54 steps. Also, the accuracy of DRPI is $\pm$ 4 steps so the rod height is approximate.

Second part is correct. DRPI is the most reliable because it actually senses the location of the rod using coils.

| | |
|---|---|
| K/A: **014K5.01** | Rod Position Indication System (RPIS) - Knowledge of the operational implications of the following concepts as they apply to the RPIS: Reasons for differences between RPIS and step counter |
| Importance Rating: | 2.7 3.0 |
| Technical Reference: | FNP Technical Specifications Bases, Ver 58 |
| References provided: | None |
| Learning Objective: | RELATE AND IDENTIFY the operational characteristics including design features, capacities and protective interlocks for the following components associated with the Digital Rod Position Indication System (OPS-52201F02):<br><br>• Rod Position Detectors |
| Question History: | FNP 01 |
| K/A match: | This question r**equires the applicant to determine the location of rod B8 (operational implication)** based on their **knowledge of the differences, based on design, of how rod heights are measured between rod control (step counters) and DRPI in that DRPI is the most reliable indication.** |
| SRO justification: | N/A |

18. 015/17AA2.02 018

Unit 1 is operating at 100% power.

The following occurs:

- MOV-3052, CCW TO RCP CLRS, closes.
- DD3, CCW FLOW FROM RCP OIL CLRS LO, comes in to alarm.

Which one of the following completes the statements below?

The most limiting components for this event are the RCP __(1)__.

The RCPs will be required to be stopped within approximately __(2)__.

A.✔ 1) Motor Bearings

2) 2 minutes

B. 1) Motor Bearings

2) 60 minutes

C. 1) Pump Lower Radial Bearings

2) 2 minutes

D. 1) Pump Lower Radial Bearings

2) 60 minutes

DD1 - CAUTION: RCP's with #1 Seal Leakoff less than 2.5 gpm may develop lower bearing and seal temperatures that exceed 225°F within 1 to 2 hours following a loss of seal injection.

DD3 - On a complete Loss of CCW Flow to RCP Motor Bearing Oil Coolers, the bearing temperature will exceed 195°F in approximately 2 minutes.

4. IF any RCP Motor Bearing Temperature exceeds 195°F, THEN:

A. IF the Reactor is critical, THEN trip the reactor.
B. Stop the RCP.
C. Perform the actions required by FNP-1-EEP-0, REACTOR TRIP OR SAFETY INJECTION.
D. Perform action of FNP-1-AOP-4.0, LOSS OF REACTOR COOLANT FLOW as time allows.

MOV-3052 isolate CCW flow to the RCP oil coolers and the RCP thermal barrier heat exchanger which functions to cool the lower radial bearing on a loss of RCP seal injection flow.

**Distracter analysis**

A. Correct. First part is correct. The RCP motor bearings are the most limiting components for this scenario since the CCW flow is lost and RCP motor bearing temperatures will increase rapidly.

Second part is correct. The RCP motor bearing temperatures will increase to 195°F with 2 minutes. The ARP has the operator trip the reactor and secure all RCPs for this failure.

B. Incorrect. First part is correct (See A.1).

Second part is incorrect (See A.2) Plausible since 60 minutes is the time the lower radial bearing temperature will rise in 1-2 hours on a loss of RCP's with #1 Seal Leakoff less than 2.5 gpm following a loss of seal injection. Plausible since this is a time requirement for a RCP malfunction on the same Annunciator panel as DD3.

C. Incorrect. First part is incorrect (See A.1) RCP lower radial bearings are cooled from two sources. A loss of the CCW will not cause the lower radial bearing temperatures to rise. Plausible since CCW is normal cooling to components and this is one of a few components with 2 cooling sources.

Second part is correct (See A.2).

D. Incorrect. First part is incorrect (See C.1).

Second part is incorrect (See B.2).

| | |
|---|---|
| K/A: **015AA2.02** | Reactor Coolant Pump (RCP) Malfunctions - Ability to determine and interpret **Abnormalities in RCP** air vent flow paths and/or **oil cooling system** as they apply to the Reactor Coolant Pump Malfunctions (Loss of RC Flow): |
| Importance Rating: | 2.8 3.0 |
| Technical Reference: | FNP-1-ARP-1.4, DD1 and DD3, Ver 53 |
| References provided: | None |
| Learning Objective: | LIST AND DESCRIBE the sequence of major actions associated with AOP-9.0, Loss of Component Cooling Water. (OPS-52520I04).<br><br>EVALUATE plant conditions and DETERMINE if any system components need to be operated while performing AOP-9.0, Loss of Component Cooling Water. (OPS-52520I06). |
| Question History: | NEW |
| K/A match: | The malfunction of the RCP is the closure of MOV-3052. The applicant must determine/interpret that a loss of CCW to the RCP oil coolers **and** lower radial bearings has resulted, then must interpret how this malfunction affects the RCP components (oil coolers and seal) and the time required for action to be taken. |
| SRO justification: | N/A |

19. 017K6.01 019

Unit 1 has experienced a Reactor Trip and SI due to a LOCA and the following conditions exist:

- The operators have transitioned to EEP-1.0, Loss of Reactor or Secondary Coolant.
- The Core Exit Thermocouples (CETCs) are reading as follows:
  - TWO CETCs are indicating a SHORT circuit.
  - THREE CETCs are 1204°F and rising.
  - All other CETCs are reading between 950°F and 1150°F and rising.

Which one of the following completes the statements below?

The indication for the SHORT circuited CETCs fail _(1)_.

The _(2)_ CETC is used to evaluate entry into FRP-C.2, Response To Degraded Core Cooling.

| | (1) | (2) |
|---|---|---|
| A. | HIGH | hottest |
| B. | HIGH | 5th hottest |
| C. | LOW | hottest |
| D.✓ | LOW | 5th hottest |

**CSF-0.2**
5th hottest CETC <1200 °F? **NO** ➔ Go to FRP-C.1

🡻 **YES**

RCS SUBCOOLING from CETC > 16°F {45°F}? **NO** ➔ **5th hottest CETC <700 °F? NO➔ Go To FRP-C.2**

🡻 **YES**

CSF - SAT

**U263686 pg *3-5***
The signal conditioning panel contains the open thermocouple detection circuitry, noise filtering capacitors, and the cold reference junction compensation circuitry. Cold junction compensation is accomplished by measuring the barrier temperature utilizing a semiconductor temperature sensor located on the signal conditioning panel. The temperature sensor circuit produces an output voltage, that is equivalent to the temperature of the barrier strip. This output voltage is read in through one of the channels on the Analog Input Boards (DT1748 and DT1748-24EX boards'. The thermocouple signals are then compensated in the software by adding the value of the cold reference junction to the thermocouple signals. **If any of the thermocouples are open or shorted the signal conditioning panels open thermocouple detection circuitry will cause the input to be driven down to 0V.**

**Distracter analysis**

A. Incorrect. First part is incorrect (See D.1). Plausible if the applicant does not recall if a thermocouple fails high or low when shorted. An RTD that experiences an open circuit will cause a high temperature reading. The applicant could confuse RTD and thermocouple operating theory.

Second part is incorrect (See D.2). Plausible if the applicant doesn't recall that the 5th hottest is selected to allow for failed high thermocouples. This is a common misconception.

B. Incorrect. First part is incorrect (See A.1).

Second part is correct (See D.2).

C. Incorrect. First part is correct (See D.1).

Second part is incorrect (See A.2).

D. Correct. First part is correct. Thermocouples that are shorted fail low.

Second part is correct. See CSF-0.2 above.

| | |
|---|---|
| K/A: **017K6.01** | In-Core Temperature Monitor System (ITM) - Knowledge of the effect of a loss or malfunction of the following ITM system components: Sensors and detectors |
| Importance Rating: | 2.7 3.0 |
| Technical Reference: | FNP-1-CSF-0.2 Core Cooling, Ver 17<br>FNP-0-CSB-0.0, Specific Background Document For FNP-1/2-CSF-0, Critical Safety Function Status Trees, Ver 1<br>U-263686, ICCMS Tech Manual Vol II, Ver 2<br>OPS-31701G, Sensors and detectors, Ver 4 |
| References provided: | None |
| Learning Objective: | RELATE AND IDENTIFY the operational characteristics including design features, capacities and protective interlocks for the following components associated with the Inadequate Core Cooling Monitor System (OPS-52202E02):<br><br>• CETC Monitor |
| Question History: | NEW |
| K/A match: | The applicant is required to **have a knowledge of the effect of a shorted CETC on the incore temperature monitoring system.** |
| SRO justification: | N/A |

20. 022A1.03 020

Unit 1 is operating at 100% power with the following conditions:

**At 1000:**

- Containment Pressure is 0 psig.
- Containment temperature is 100°F.
- MI-3319A, B, C and D, CTMT CLR SUPP AIR MOISTURE, indicate 72 Dewpoint °F.
- Containment Coolers are running in slow speed.

**At 1015:**

A LOCA occurs and the following conditions exist:

- Containment Pressure is 5 psig.
- Containment temperature is 150°F.
- MI-3319A, B, C and D, CTMT CLR SUPP AIR MOISTURE, indicate 130 Dewpoint °F.

Which one of the following completes the statements below at **1015**?

The Containment Cooler discharge will be through the _(1)_.

The Containment Cooler fans will be drawing _(2)_ amps than at 1000.

| | (1) | (2) |
|---|---|---|
| A. | ductwork | MORE |
| B.✔ | dropout plate | MORE |
| C. | ductwork | LESS |
| D. | dropout plate | LESS |

**Added that the Containment Coolers are running in Slow Speed prior to the LOCA. The FSD states that the design of the Containment Cooler motor is based on 80Hp in Fast and 115 Hp during a LOCA when the coolers are running in slow. However, there is no data to determine at what point the mass of Containment atmosphere increases to the point where the Slow speed fan would draw more current than Fast speed. With the Containment Cooler in Slow at the beginning of the event, the applicant will only have to evaluate the current drawn by the cooler based on atmospheric conditions (humidity) which meets the K/A -** ***Containment Cooling System (CCS) - Ability to predict and/or monitor changes in parameters (to prevent exceeding design limits) associated with operating the CCS controls including: Containment humidity.***

**Tech Spec 3.6.6 Bases:**

In post accident operation following an actuation signal, unless an LOSP signal is present, the Containment Cooling System fans are designed to start automatically in slow speed if not already running. If an LOSP signal is present, only the two fans selected (one per train) will receive an auto-start signal and will start in slow speed. If running in high (normal) speed, the fans automatically shift to slow speed. **The fans**

**are operated at the lower speed during accident conditions to prevent motor overload from the higher mass atmosphere. In addition, if temperature at the cooler discharge reaches 135°F, fusible links holding dropout plates will open and the fan discharge will no longer be directed through the common discharge header. This function helps to protect the fans in a post-accident environment by reducing the back pressure on the fans.**

**FSD- A181013**:
3.1.2.5 A 125 hp motor is provided for fan operation to meet the design brake horsepower requirement of **105 hp during low-speed operation following a LOCA**. During normal operation, the design brake horsepower of the fan in **high-speed operation is 80 hp.**

**<u>Distracter analysis</u>**

A. Incorrect. First part is incorrect (See B.1). When containment temperature reaches ~135°F, the dropout plates fall open. Plausible if the applicant believes that the links melt at 160°F to 175°F which is when the fire damper fusible links melt.

Second part is correct (See B.2).

B. Correct. First part is correct. The dropout plates open at ~ 135°F.

Second part is correct. The higher mass atmosphere in Containment due to the LOCA will cause the fan motors to draw more current.

C. Incorrect. First part is incorrect (See A.1).

Second part is incorrect (See B.2). Plausible if the applicant only thought that the increase in temperature caused air density to lower and did not consider other factors affecting Containment atmosphere.

D. Incorrect. First part is correct (See B.1).

Second part is incorrect (See C.2).

Medium break LOCA run on desktop simulator produced the approximate values.

| | |
|---|---|
| K/A: **022A1.03** | Containment Cooling System (CCS) - Ability to predict and/or monitor changes in parameters (to prevent exceeding design limits) associated with operating the CCS controls including: Containment humidity |
| Importance Rating: | 3.1 3.4 |
| Technical Reference: | FSD-A181013, Containment Ventilation System, Ver 14. |
| References provided: | None |
| Learning Objective: | DEFINE AND EVALUATE the operational implications of normal / abnormal plant or equipment conditions associated with the safe operation of the Containment Spray and Cooling System components and equipment, to include the following (OPS-40302D07):<br><br>• Normal Control Methods<br>• Abnormal and Emergency Control Methods<br>• Automatic actuation including setpoint (example SI, Phase-B, LOSP) and the effect of selecting the containment cooler control to local. |
| Question History: | NEW |
| K/A match: | Requires the applicant to **monitor changes in containment humidity and based on this predict the changes in the parameters of the containment cooler fans in an environment with more humidity (water vapor) and will draw more current. The dropout plate will actuate at 135°F to reduce the back pressure on the fans.** |
| SRO justification: | N/A |

21. 022AK1.04 021

Unit 1 is operating at 100% power and the following conditions exist:

- AOP-16.0, CVCS Malfunction, has just been exited after a charging flow controller failure.
- FK-122, CHG FLOW, is in MANUAL and has been repaired.

Subsequently, FK-122 is placed in AUTOMATIC and the following conditions exist:

- One 60 gpm orifice is on service.
- Charging flow is stable at 62 gpm.

Which one of the following completes the statement below?

If FK-122 were to go to minimum demand, charging flow would decrease to a **minimum** flow rate of _(1)_ , which is designed to prevent _(2)_.

A.✔ 1) 18 gpm

2) flashing downstream of the letdown orifices

B. 1) 18 gpm

2) overheating of the charging pumps

C. 1) 40 gpm

2) flashing downstream of the letdown orifices

D. 1) 40 gpm

2) overheating of the charging pumps

**3.3** In auto, CHG FLOW FK 122 minimum demand corresponds to 18 gpm charging flow. This ensures adequate cooling to the regenerative heat exchanger to prevent flashing downstream of the letdown orifices with one 60 gpm orifice on service. With two orifices on service, approximately 40 gpm charging flow is required for regenerative heat exchanger cooling.

**Distracter analysis**

A. Correct. First part is correct. Minimum charging flow in AUTOMATIC is 18 gpm.

Second part is correct. Per P&L 3.3, 18 gpm ensures adequate cooling to the regenerative heat exchanger to prevent flashing downstream of the letdown orifices with one 60 gpm orifice on service.

B. Incorrect. First part is correct. (See A.1)

Second part is incorrect (See A.2). Plausible if the applicant thinks that reduced charging flow would equate to reduced mini-flow flow which is incorrect. Also, the charging miniflow goes through the seal water return HX and temperature would be unaffected by changing charging flows.

C. Incorrect. First part is incorrect (See A.1). Plausible since Figure 1 of SOP-2.1, re-establishing LTDN after isolation with no equipment malfunction, has the operator establish 40 gpm flow rate in step 1 when placing one orifice on service.

Second part is correct (See A.2).

D. Incorrect. First part is incorrect (See C.1).

Second part is incorrect (See B.2).

| | |
|---|---|
| K/A: **022AK1.04** | Loss of Reactor Coolant Makeup - Knowledge of the operational implications of the following concepts as they apply to Loss of Reactor Coolant Makeup: Reason for changing from manual to automatic control of charging flow valve controller. |
| Importance Rating: | 2.9 3.0 |
| Technical Reference: | FNP-1-SOP-2.1, Chemical and Volume Control System Plant Startup and Operation, Ver 131 |
| References provided: | None |
| Learning Objective: | RECALL AND DISCUSS the Precautions and Limitations (P&L), Notes and Cautions (applicable to the "Reactor Operator") found in the following Procedures (OPS-52101F08).<br><br>• SOP-2.1, CVCS Plant Startup and Operation.<br>[...] |
| Question History: | NEW |
| K/A match: | **There has been a loss of CVCS flow** due to a controller failure. FK-122 has been placed in manual and is now being placed in AUTO. **A reason for placing FK-122 in AUTO and not leaving it in MANUAL is to ensure adequate cooling to the regenerative heat exchanger to prevent flashing downstream of the letdown orifices with one 60 gpm orifice on service should the controller fail to minimum demand based on current plant conditions. The operational implication would be that flashing would occur if Chg flow were to fall to <18 gpm and cause damage to the orifices and piping due to water hammer and the flashing of water to steam. A loss of letdown would be the result.** This question meets the KA in that it asks the minimum flow rate for being in auto if a controller were to fail and the reason. |
| SRO justification: | N/A |

22. 022K4.03 022

Unit 1 is operating at 100% power when a Steam Break occurs on 1B SG and the following conditions exist:

- EE5, CTMT ISO PH B, is in alarm.
- All Phase B automatic actions have occurred.

Which one of the following completes the statements below?

CCW to the RCP Thermal Barrier Heat Exchanger _(1)_ isolated.

Seal Injection _(2)_ isolated.

| | (1) | (2) |
|---|---|---|
| A.✔ | IS | is NOT |
| B. | is NOT | is NOT |
| C. | IS | IS |
| D. | is NOT | IS |

**EE5**
**Automatic Action:**
**1. The following valves close**
c) CCW FROM RCP THRM BARR Q1P17HV3045
f) CCW FROM RCP THRM BARR Q1P17HV3184

**FSD A181003**
**3.3.1.2** The seal water injection lines to the RCP are considered as open flow paths post-LOCA. The high pressure inflow through these lines during the injection and recirculation phases precludes any containment to atmosphere leakage. In the event of a loss of seal water flow through these lines, a water seal in the charging pump suction and discharge piping precludes containment to atmosphere leakage.

**<u>Distracter analysis</u>**

A. Correct. First part is correct. Phase B isolates CCW cooling to the RCP Thermal Barrier Heat Exchanger.

Second part is correct. Seal injection is NOT isolated by SI, Phase A or Phase B.

B. Incorrect. First part is incorrect (See A.1). Plausible if the applicant does not recall all the components isolated on a Phase B. Since CCW is water solid and cools the thermal barrier hx, they may believe it is not isolated on a phase B.

Second part is correct (See A.2).

C. Incorrect. First part is correct (See A.1).

Second part is incorrect (See B.2). Plausible if the applicant believes that Phase B isolates RCP seal injection lines. Seal return is isolated on an SI and the applicant could confuse the two.

This is a plausible combination if the applicant reasons that the shutdown seal will actuate and seal injection and CCW to the thermal barrier hx are no longer needed

D. Incorrect. First part is incorrect (See C.1).

Second part is incorrect (See C.2).

| | |
|---|---|
| K/A: 022K4.03 | Containment Cooling System (CCS) - Knowledge of CCS design feature(s) and/or interlock(s) which provide for the following: Automatic containment isolation. |
| Importance Rating: | 3.6* 4.0 |
| Technical Reference: | FNP-1-ARP-1.5, EE5, CTMT ISO PH B, Ver 58.0<br>FSD-A181009, CVCS/HHSI/ACCUM/RMWS, Ver 38<br>FSD-181003, Containment Isolation System, Ver 26. |
| References provided: | None |
| Learning Objective: | DEFINE AND EVALUATE the operational implications of normal / abnormal plant or equipment conditions associated with the safe operation of the Containment Structure and Isolation System components and equipment, to include the following (OPS-40302B07):<br>• […]<br>• […]<br>• Automatic actuation including setpoint (example SI, Phase A, Phase B, MSLIAS, LOSP, SG level) |
| Question History: | MOD SUMMER 11 |
| K/A match: | Requires the applicant to know the **design feature of the Phase B Containment Isolation that isolates CCW cooling to the RCP Thermal Barrier Heat Exchanger.** |
| SRO justification: | N/A |

23. 025AA1.01 023

Unit 1 is in Mode 5 with the following conditions:

- 1B RHR pump is tagged out.
- All SG Wide Range levels are 84%.
- Pzr level is being maintained at 21% on LI-462, PRZR LVL.
- RCS temperature is 155°F.
- RCS pressure is 325 psig.
- All RCP's are secured.
- 1A RHR pump is running in the cooldown lineup.

Subsequently, the following occurs:

- 1A RHR pump trips on overcurrent and cannot be restarted.
- RCS temperature is 175°F and slowly rising.

Which one of the following completes the statements below?

Per AOP-12.0, Residual Heat Removal System Malfunction, the preferred method to re-establish core cooling is to establish _(1)_.

Core cooling is monitored using _(2)_.

| | (1) | (2) |
|---|---|---|
| A. | feed and bleed | RCS cold leg temperatures |
| B. | a secondary heat sink | RCS cold leg temperatures |
| C. | feed and bleed | CETCs |
| D. ✓ | a secondary heat sink | CETCs |

**ARG-1**

If the RCS is intact and the loops are not isolated with SG nozzle dams or loop isolation valves, a secondary heat sink using half or more SGs will be an effective alternate mode of decay heat removal that will last for several hours or longer. Since there would be no significant fluid inventory losses for this case, makeup requirements can easily be met with a minimum amount of charging flow or possibly RWST (or VCT) gravity feed if initiated early enough. For this situation, it should also be possible to refill and pressurize the RCS and then operate the RCPs to sweep the noncondensibles from the loops and thereby improve the primary-to-secondary heat transfer.

**AOP-12:**

**24. Check SGs available.**

• Check SG primary nozzle dams
- REMOVED.

• Check SG primary manways -
INSTALLED.

• Check SG secondary handhole
covers - INSTALLED.

NOTE: Establishing a secondary heat sink will reduce RCS heat up and pressurization rate to provide more time for recovery actions.

**25. Verify secondary heat sink established.**

25.1 Maintain wide range level in all available SGs greater than 75% using FNP-1-SOP-22.0, AUXILIARY FEEDWATER SYSTEM.

25.2 IF SG steam space intact, THEN open atmospheric relief valves to prevent SG pressurization.

1A(1B,1C) MS ATMOS
REL VLV
PC 3371A adjusted
PC 3371B adjusted
PC 3371C adjusted

25.3 IF SGBD system available, AND AFW system available, THEN establish blowdown from available SGs using FNP-1-SOP-16.3, STEAM GENERATOR FILLING AND DRAINING.

Feed and Bleed or Feed and Spill would be established if both of these conditions were met.

29.1 Check RCS level LESS than 121 ft 11 in AND core exit T/Cs GREATER than 200°F.

**<u>Distracter analysis</u>**

A. Incorrect. First part is incorrect (See D.1). Plausible if the applicant believes that establishing a secondary heat sink is not correct because RCS temperature is less than 200°F and so steaming the SG would not be an option. Feed and Bleed is only used when RCS level is < 121 ft 11 in and RCS temp is > 200°F.

Second part is incorrect (See D.2). Plausible since Tcold is used in other procedures (ESP-0.2) to evaluate cooldown and the applicant could believe that it is used here. Also, Tcold would not

give an accurate indication of core temperature.

B. Incorrect. First part is correct (See D.1).

Second part is incorrect (See A.2).

C. Incorrect. First part is incorrect (See A.1).

Second part is correct (See D.2).

D. Correct. First part is correct. Since the RCS is filled and intact, establishing a secondary heat sink is the correct action per AOP-12.

Second part is correct. AOP-12 directs the use of CETCs

| | |
|---|---|
| K/A: 025AA1.01 | Loss of Residual Heat Removal System (RHRS) - Ability to operate and / or monitor the following as they apply to the Loss of Residual Heat Removal System: RCS/RHRS cooldown rate |
| Importance Rating: | 3.6 3.7 |
| Technical Reference: | Background Information for WOG Abnormal Response Guideline ARG-1 Loss of RHR While Operating at Mid-Loop Conditions, Ver 2<br>FNP-1-AOP-12.0, RHR System Malfunction, Ver 25 |
| References provided: | None |
| Learning Objective: | LIST AND DESCRIBE the sequence of major actions associated with AOP-12.0, RHR System Malfunction and/or STP-18.4, Containment Closure. (OPS-52520L04) |
| Question History: | MOD FNP EXAM BANK |
| K/A match: | Requires the applicant to **know how the RCS is operated to establish a cooldown rate on a loss of RHR and the method which temperature is monitored.** |
| SRO justification: | N/A |

24. 026AG2.4.50 024

Unit 1 is operating at 100% power when the following occurs:

- A leak develops in the CCW system.
- CCW Surge Tank level is slowly lowering.
- AA4 and AB4, CCW SRG TK LVL A(B) TRN HI-LO, are in alarm.
- AA5, CCW SRG TK LVL A TRN LO-LO, has come into alarm.

Which one of the following completes the statements below?

CCW system automatic isolations are designed to occur at _(1)_ in the CCW Surge Tank.

Using the NORMAL source of makeup water, the operator will open _(2)_ to make up to the CCW Surge Tank.

| | (1) | (2) |
|---|---|---|
| A. | 35 inches | MOV-3031A, MKUP TO CCW FROM RMW |
| B. | 20 inches | MOV-3031A, MKUP TO CCW FROM RMW |
| C. | 35 inches | MOV-3030A, MKUP TO CCW FROM DW STOR TK |
| D✔ | 20 inches | MOV-3030A, MKUP TO CCW FROM DW STOR TK |

**ARP AA5: 20 inches**
**Automatic Action**
1. Closes CCW Valves (Q1P17HV3096A&B) to isolate CCW to/from Evaporator Packages and H2 Recombiners. (Q1P17LSLL3027CD-A)

2. Trips closed Q1P17HV2229, CCW to Sample Cooler (Q1P17LSLL3027CD-A).

**Operator Action**
4.1 Attempt to fill CCW surge tank using Normal Make-up to maintain level above the lo level alarm point as follows;

4.2. IF unable to fill the CCW Surge Tank per the Normal Make-up method, THEN attempt to fill CCW surge tank using Emergency Make-up to maintain level above the lo level alarm point as follows;

5. IF a loss of CCW cooling has occurred, THEN refer FNP-1-AOP-9.0, LOSS OF COMPONENT COOLING WATER.

**Distracter analysis**

A. Incorrect. First part is incorrect (See D.1). Plausible since this is the Surge tank LO Level alarm setpoint.

Second part is incorrect (See D.2). Plausible if candidate cannot recall which of the two makeup sources is the NORMAL source.

B. Incorrect. First part is correct (See D.1).

Second part is incorrect (See A.2).

C. Incorrect. First part is incorrect (See A.1).

Second part is correct (See D.2).

D. Correct. First part is correct. AA5 Setpoint is 20 inches which causes the automatic closure of HV3096A&B and HV2229.

Second part is correct. Demin water storage tank is the normal source for makeup to the CCW surge tank.

| | |
|---|---|
| K/A: **026AG2.4.50** | Loss of Component Cooling Water (CCW) - Ability to verify system alarm setpoints and operate controls identified in the alarm response manual. |
| Importance Rating: | 4.2 4.0 |
| Technical Reference: | FNP-1-ARP-1.1 - AA5, CCW SRG TK LVL A TRN LO-LO, Ver 53.1 |
| References provided: | None |
| Learning Objective: | SELECT AND ASSESS the following instrument/equipment response expected when performing CCW System evolutions including the fail condition, alarms, and trip setpoints (OPS-52102G07).<br>• Surge Tank Level |
| Question History: | NEW |
| K/A match: | Requires the applicant to **determine at which level the automatic isolations of the CCW system occur (verify system alarm setpoints which is when these valves close) and know what source of water is used to fill the surge tank (operate controls identified in the ARP to raise the CCW Surge Tank level).** |
| SRO justification: | N/A |

25. 026K2.01 025

Unit 2 is operating at 50% power when a simultaneous Dual Unit LOSP occurs.

- 4160V Bus 2G remains de-energized due to the DG not starting for that emergency bus.

Three (3) minutes after the LOSP, a Large Break LOCA occurs on Unit 2.

- Containment pressure peaked at 29 psig and is trending down.

Which one of the following completes the statement below?

The _(1)_ Containment Spray pump is currently running and is powered from the _(2)_ DG.

| | (1) | (2) |
|---|---|---|
| A. | 2A | 1C |
| B. | 2B | 1C |
| C.✔ | 2A | 1-2A |
| D. | 2B | 1-2A |

In the LOSP the 1-2A DG will tie onto the unit 1 A Train busses. Then when the SI and subsequent phase B signal comes in the 1-2A DG and 1C DG will load shed, and then 1-2A DG will align to Unit 2 and the 2A CS pump will start at step 2.

**FSD-A181008: 3.1.5.2**
Without offsite power available, the CSS pumps shall start by the diesel generator ESS loading sequencer. Starting will occur at step two of the sequence if the "P" signal is present at that time. If the "P" signal occurs between the completion of step two and step six of the ESS sequence, then starting will occur at the completion of step six of the loading sequence. If the "P" signal occurs after the completion of step six, starting will
take place immediately.

**Pg 2-1** CSS initiation is automatic upon a containment pressure hi-3 signal ("P" signal)

**FSD-A181005**
LOSP on both units and LOCA on Unit 2:
For LOSP on both units and LOCA on Unit 2, the alignment of the diesel generators will be as follows:

1-2A Unit 2 Buses 2F and 2K
1C Unit 1 Buses 1F, 1K and 1H
1B Unit 1 Buses 1G, 1L and 1J
2B Unit 2 Buses 2G, 2L and 2J

**<u>Distracter analysis</u>**

A. Incorrect. First part is correct (See C.1).

Second part is incorrect (See C.2). Plausible since the 1C and 1-2A DGs align to either Unit's 'A' Train depending on the scenario and the applicant may not recall the proper DG alignment for this scenario.

B. Incorrect. First part is incorrect (See C.1). Plausible if the applicant does not recall the CS pump power supplies.

Second part is incorrect (See A.2)

C. Correct. First part is Correct. The normal power supply to 2A CS pump is 2F 4160V AC bus.

Second part is correct. For LOSP on both units and LOCA on Unit 2, the alignment of the diesel generators will be as follows:

- 1-2A Unit 2 Buses 2F and 2K

D. Incorrect. First part is incorrect (See B.1).

Second part is correct (See C.1).

| | |
|---|---|
| K/A: **026K2.01** | Containment Spray System (CSS) - Knowledge of bus power supplies to the following: Containment spray pumps. |
| Importance Rating: | 3.4* 3.6 |
| Technical Reference: | FSD-A181008, Containment Spray System, Ver 24.<br>A-351199, Unit 2 Load List, Ver 61<br>FSD-A181005, Diesel Generators, Ver 44.<br>FSD-A181007, Reactor Protection System, Ver 18 |
| References provided: | None |
| Learning Objective: | NAME AND IDENTIFY the Bus power supplies, for those electrical components associated with the Containment Spray and Cooling System, to include those items in Table 3- Power Supplies (OPS-40302D04). |
| Question History: | NEW |
| K/A match: | Requires the applicant to **know the normal power supply to the 2B CS pump** and the 1-2A DG alignment and power supply to the 2A CS pump upon an LOSP with a subsequent SI. |
| SRO justification: | N/A |

26. 029A1.02 026

Unit 2 plant conditions are as follows:

- Containment Main Purge system is running.
- Containment radiation levels are **rising**.

Subsequently, R-24A, CTMT PURGE, loses control power.

Which one of the following completes the statements below?

Radiation levels _(1)_ stop rising in the Main Exhaust Plenum.

CTMT Main Purge supply and exhaust fans _(2)_ trip.

| | (1) | (2) |
|---|---|---|
| A.✔ | WILL | will NOT |
| B. | will NOT | will NOT |
| C. | WILL | WILL |
| D. | will NOT | WILL |

**SOP-45:**
3.5 The radiation monitors fail to a “High Radiation” **condition on loss of** instrument and/or **control power** that will result in actuation of associated automatic functions.

**FH4: CP RE 24A or B HI RAD**
PROBABLE CAUSE
1. High Radiation Level in the Containment Purge Exhaust Line.
2. The radiation monitors fail to a “High Radiation” condition on loss of instrument and/or **control power** that will result in actuation of associated automatic functions.

AUTOMATIC ACTION
1. Isolates Containment by closing Purge Supply and Exhaust Valves 2-CP-HV-3196, 2-CP-HV-3197, 2-CP-HV-3198A, B, C, & D, 2-CP-HV-2867C & D and 2-CP-HV-2866C & D.

**Distracter analysis**

A. Correct. First part is correct. Per SOP-45, a radiation monitor that has lost control power will initiate its automatic actions.

Second part is correct. R-24A will NOT automatically secure the main purge supply and exhaust fans.

B. Incorrect. First part is incorrect (See B.1). Plausible if candidate does not recall that a loss of control power will cause the actuation of associated automatic functions.

Second part correct (See B.2).

C. Incorrect. First Part is incorrect (See A.1).

Second part is incorrect. (See B.1). Plausible since it could seem logical to the applicant that when the main purge supply and exhaust dampers shut, the fan would also automatically secure.

D. Incorrect. First part is correct (See B.1)

Second part is incorrect (See C.2). Plausible if the applicant does not recall what auto functions are actuated by R-24A and believes that R-24A will trip the fans. Additionally, with the Aux Building main exhaust fan running, the applicant could reason that there is still a negative pressure on the CTMT purge outlet causing CTMT radiation release to the plant vent stack to continue.

| | |
|---|---|
| K/A: **029A1.02** | Containment Purge System (CPS) - Ability to predict and/or monitor changes in parameters to prevent exceeding design limits) associated with operating the Containment Purge System controls including: Radiation levels |
| Importance Rating: | 3.4 3.4 |
| Technical Reference: | FNP-2-ARP-1.6, FH4, CP RE 24A or B HI RAD, Ver 59<br>FNP-2-SOP-45.0, Radiation Monitoring System, Ver 38.1 |
| References provided: | None |
| Learning Objective: | RELATE AND IDENTIFY the operational characteristics including design features, capacities and protective interlocks for the components associated with the Containment Ventilation and Purge System, to include those items in Table 6-Component Locations (OPS-40304A02). |
| Question History: | NEW |
| K/A match: | Requires the applicant to **predict, based on a loss of control power to R-24A, when the earliest time the radiation release is terminated thereby preventing the off site radiation exposure limit from potentially being exceeded.** |
| SRO justification: | N/A |

27. 033K4.05 027

Unit 1 is operating at 100% power and the following conditions exist:

- A blended make-up to the Spent Fuel Pool (SFP) is occurring.
- A calibration error results in FT-168, PRI WATER MKUP FLOW, providing a flow input to the Reactor Makeup System that is **less** than the actual flowrate.

Which one of the following completes the statements below?

The blended flow makeup resulted in a _(1)_ of the SFP.

Per Tech Spec 3.7.14, Fuel Storage Pool Boron Concentration, the MINIMUM required SFP boron concentration is _(2)_ ppm.

| | (1) | (2) |
|---|---|---|
| A. | boration | 2000 |
| B. | boration | 2200 |
| C. ✓ | dilution | 2000 |
| D. | dilution | 2200 |

**Tech Specs 3.7.14**
The fuel storage pool boron concentration shall be **≥ 2000 ppm.**
APPLICABILITY: When fuel assemblies are stored in the fuel storage pool.

**FSD-A181009**

5.30.5.1 **Flow measurement (FT-168) shall be provided downstream of the blender to indicate total makeup flow** to the charging header and as input to the Reactor Makeup Control System.

5.30.5.2 Upstream **boric acid flow measurement (FT-113) shall be provided to serve as input to the Reactor Makeup Control System.**

5.78.1.1 This differential pressure transmitter (and associated orifice flow element) shall provide measurement of the total makeup flow from the boric acid blender. **It shall also provide input to the Reactor Makeup Control System for regulation of RMW flow** and shall alert the operator of a deviation from the selected flow setpoint.

**Distracter analysis**

A. Incorrect. First part is incorrect (See C.1). Plausible if the candidate thinks that the lower signal results in less RMW added and therefore more acid for a given volume which would result in a boration of the SFP.

Second part is correct (See C.2).

B. Incorrect. First part is incorrect (See A.1).

Second part is incorrect (See C.2). Plausible because the applicant could confuse the SFP minimum boron concentration with the accumulators minimum boron concentration which is 2200 ppm.

C. Correct. First part is correct. FT-168 will regulate total makeup flow to 120 gpm. This is a combination of acid flow and Reactor Makeup Water (RMW) flow. The amount of acid flow will be determined by the properly functioning FT-113. This means that the malfunctioning LOWER signal sent to FK-168 by FT-168 will cause the system to raise the flow of RMW to achieve a "sensed" total flow of 120 gpm resulting in more RMW than expected therefore a lower boron concentration in the makeup water supplied to the SFP. This will result in a dilution of the SFP.

Second part is correct. Tech Spec 3.7.14 requires the SFP boron concentration to be ≥ 2000 ppm.

D. Incorrect. First part is correct (See C.1).

Second part is incorrect (See B.2).

| | |
|---|---|
| K/A: **033K4.05** | Spent Fuel Pool Cooling System (SFPCS) - Knowledge of design feature(s) and/or interlock(s) which provide for the following: Adequate SDM (boron concentration) |
| Importance Rating: | 3.1 3.3 |
| Technical Reference: | Unit 1 Technical Specifications, Ver 190<br>D-175043, SH1, Spent Fuel Pool Cooling, ver 27<br>D-175036, SH 1, Reactor Makeup Water, Ver 22 |
| References provided: | None |
| Learning Objective: | RECALL AND APPLY the LCO and APPLICABILITY for Technical Specifications (TS) or TRM requirements, and the REQUIRED ACTIONS for 1 HR or less TS or TRM requirements, and the relevant portions of BASES that <u>DEFINE</u> the OPERABILITY and APPLICABILITY of the LCO associated with the Spent Fuel Pool Cooling and Purification and Refueling Water Storage Tank Purification Systems components and attendant equipment alignment, to include the following (OPS-52108L01):<br><br>[…]<br>• 3.7.14, Fuel Storage Pool Boron Concentration<br><br>RELATE AND IDENTIFY the operational characteristics including design features, capacities and protective interlocks for the components associated with the Reactor Makeup Control and Chemical Addition System, to include the following (OPS-40301G02):<br>[…]<br>• Inter connections with other systems<br>• Primary Water Makeup Flow Controller, FK-168 |
| Question History: | MOD NORTH ANNA 08 |
| K/A match: | Requires the applicant to evaluate **knowledge of TS requirement for minimum boron concentration, which provides for adequate SDM.** Also evaluates candidates ability to **predict effect of an equipment malfunction which could adversely affect ability to maintain desired boron concentration.** |
| SRO justification: | N/A |

28. 035A2.01 028

Unit 1 is operating at 100% power with the following conditions:

- Reactor power is now 100.5% and slowly rising.
- Tavg is 570.5°F and slowly lowering.
- Pressurizer pressure is 2210 psig and slowly lowering.
- Turbine load is 890 MWe and lowering.
- SG pressures are 720 psig and slowly lowering.
- Containment pressure is 2.1 psig and slowly rising.

Which one of the following completes the statements below?

The event in progress is a _(1)_ line break.

Per AOP-14.0, Secondary System Leakage, the operators are required to _(2)_.

| | (1) | (2) |
|---|---|---|
| A. | steam | reduce turbine load |
| B.✔ | steam | trip the reactor |
| C. | feed | reduce turbine load |
| D. | feed | trip the reactor |

**AOP-14:**

| | |
|---|---|
| 1. [CA] Evaluate plant status for safe operation. | 1. Perform the following |
| Pressurizer level GREATER THAN 15% | 1.1 **Verify reactor tripped** |
| AND | |
| Pressurizer pressure GREATER THAN 2000 psig | 1.2 IF reactor tripped, THEN CLOSE SG main steam isolation and bypass valves |
| AND | |
| Steam generator pressure GREATER THAN 650 psig | |
| AND | |
| **Containment pressure LESS THAN 2 psig** | |
| AND | |
| IF main generator on line, | |
| THEN | |
| (check reactor power) - (turbine power + any steam dump power) mismatch LESS THAN 10%. | |
| AND | |
| IF main generator off line, | |
| THEN check reactor power less than ~ 15% | |

AOP-14, step 9 and note above step 9 says:
The intent of step 9 is to reduce reactor power to within the capacity of the AFW system if possible and step 9 has the crew reduce power per UOP-3.1 and UOP-2.1 if the above trip criteria is not met.

**Distracter analysis**

A. Incorrect. First part is correct (See B.1).

Second part is incorrect (See B.2). Plausible since UOP-3.1, Power Operation, requires a reduction in turbine load if 100% power is exceeded. This would be the correct thing to do if containment pressure did not meet the reactor trip criteria. Also Step 7 and 9 and note above step 9 addresses ramping the unit down to mode 2 if the trip criteria is not exceeded in the previous steps.

B. Correct. First part is correct. All the conditions in the stem - Tavg lowering, RCS Pressure lowering and MWe lowering **are indicative of a steam break** where the steam is exiting the piping before reaching the turbine. The containment parameters show that the break is in containment.

Second part is correct. With containment pressure greater than 2 psig, reactor trip criteria is met.

C. Incorrect. First part is incorrect on a feedline break, Rx power would be stable, turbine MWe would be stable, and RCS pressure would be stable. SG pressure would not lower and Tavg would be rising. Plausible if the applicant misdiagnoses the event. AOP-14 addresses a steam or feed break and they have similar characteristics.

Second part is incorrect (See A.1).

D. Incorrect. First part is incorrect (See C.1).

Second part is correct (See B.2).

| | |
|---|---|
| K/A: **035A2.01** | Steam Generator System (S/GS) - Ability to (a) predict the impacts of **<u>Faulted or ruptured S/Gs</u>** on the S/GS; and (b) based on those predictions, use procedures to correct, control, or mitigate the consequences of those malfunctions or operations |
| Importance Rating: | 4.5 4.6 |
| Technical Reference: | FNP-1-AOP-14.0, Secondary System Leakage. Ver 10.0 |
| References provided: | None |
| Learning Objective: | STATE AND EXPLAIN the operational implications for all Cautions, Notes, and Actions associated with AOP-14, Secondary System Leakage. (OPS-52521O03) |
| Question History: | MOD VOTGLE 12 |
| K/A match: | Applicant must **predict that a steam break has occurred based on the impact to plant parameters (which is a backward logic way to meet the first part of the KA). The parameters include but are not limited to SGs since the trip criteria in AOP-14 is due to ctmt pressure.** Applicant must **determine the proper procedural response to mitigate a faulted SG inside ctmt.** |
| SRO justification: | N/A |

29. 036AG2.1.7 029

Unit 1 is operating at 100%. A fuel shuffle is being performed in the Unit 1 SFP.

**At 1000:**

- EH2, SFP LVL HI-LO, is in alarm.
- SFP level is 153' 3" and stable.

**At 1015:**

The SRO in charge of refueling reports that a fuel assembly has been dropped.

- FH5, SFP AREA RE-25 A OR B HI RAD, is in alarm.
- R-25A & B, SPENT FUEL BLDG EXH, reads off scale high.

Which one of the following completes the statements below?

The operating crew is required to enter _(1)_ .

The crew is required to dispatch personnel to _(2)_ per the applicable AOP.

Procedure titles are as follows:

AOP-30.0, Refueling Accident
AOP-49.3, Spent Fuel Pool Emergency

| | (1) | (2) |
|---|---|---|
| A. | AOP-49.3 | make up to the SFP using the RWST |
| B. | AOP-30.0 | make up to the SFP using the RWST |
| C. | AOP-49.3 | ensure all SFP hatches and doors are closed |
| D.✔ | AOP-30.0 | ensure all SFP hatches and doors are closed |

**AOP-30 Symptoms or entry conditions**

1. This procedure is entered when a fuel handling accident causes damage to a fuel assembly in conjunction with a high radiation indication on any of the following:
[] R-2 CTMT 155 ft
[] R-5 SFP ROOM
[] R-24A(B) CTMT PURGE
**[]R-25A(B) SPENT FUEL BLDG EXH**

Step 1.6. Dispatch personnel to close all spent fuel area fuel handling hatches.

Step 5. Verify all access doors to accident area - CLOSED

Step 20 has the operator makeup to the refueling cavity from the RHR system if the cavity is low.

**AOP-49.3 B. Symptoms or entry conditions**

1. A report of damage to and/or leakage from the SPENT FUEL POOL caused

by an external threat is received.

2. Any condition outside the design basis of the plant that will result in a long term loss of Spent Fuel Pool cooling.

**Distracter analysis**

A. Incorrect. First part is incorrect (See D.1). Plausible based on the name of the procedures. The applicant may believe that since there is no refueling occurring (Unit 1 at 100%), AOP-30 does not apply and AOP-49.3 applies since there is "an emergency" in the SFP.

Second part is incorrect (See D.2). Plausible since this is an action of AOP-49.3 to keep all assemblies covered with water and would seem logical since there was a SFP HI-LO level alarm and a damaged fuel assembly lying on the racks. The applicant may think that keeping the damaged assembly covered with water is a required action.

B. Incorrect. First part is correct (See D.1)

Second part is incorrect (See D.2). Plausible since AOP-30 directs filling the refueling cavity. The applicant could easily confuse this action with filling the SFP. It could seem logical since there was a SFP HI-LO level alarm and a damaged fuel assembly lying on the racks. The applicant may think that keeping the damaged assembly covered with water is a required action.

C. Incorrect. First part is incorrect (See A.1).

Second part is correct (See D.2). This is a logical connection to AOP-49.3 since during a SFP Emergency, the applicant could assume the affected area would be isolated as radiation levels are high.

D. Correct. First part is correct. This scenario meets the entry requirements of AOP-30.0.

Second part is correct. This action is taken per step 1.6 and 5.

| | |
|---|---|
| K/A: **036AG2.1.7** | Fuel Handling Incidents - Ability to evaluate plant performance and make operational judgments based on operating characteristics, reactor behavior, and instrument interpretation. |
| Importance Rating: | 4.4 4.7 |
| Technical Reference: | FNP-1-AOP-30.0, Refueling Accident, Ver 19 |
| References provided: | None |
| Learning Objective: | EVALUATE plant conditions and DETERMINE if entry into AOP-30.0, Refueling Accident is required. (OPS-52521H02) |
| Question History: | MOD FNP 05 |
| K/A match: | Requires the applicant to **interpret plant instrumentation (rad monitors and SFP alarm) and reports from the field and determine the applicable procedure to enter and the appropriate action to take (operational judgment).** |
| SRO justification: | N/A |

30. 037AK1.01 030

Unit 1 is performing the actions of AOP-2.0, Steam Generator Tube Leakage, due to a tube leak on the 1A SG. The following conditions exist:

- RCS pressure is currently being reduced to minimize break flow.

The following parameters are observed:

- SG pressures are:

| 1A SG | 1B SG | 1C SG |
|---|---|---|
| 948 psig | 905 psig | 900 psig |

  - RCS pressure is 916 psig.
  - The highest reading non-upperhead CETC is 518°F.
  - PRZR level is 43%.

- BOTH Subcooled Margin Monitors are malfunctioning.

Which one of the following completes the statements below?

The current value of subcooling is approximately _(1)_.

The RCS pressure reduction _(2)_ required to be stopped.

**Reference Provided**

| | (1) | (2) |
|---|---|---|
| A. | 22°F | IS |
| B. | 22°F | is NOT |
| C✓ | 18°F | IS |
| D. | 18°F | is NOT |

**AOP-2:**
**Step 34.2**
[CA] WHEN one of the following conditions occur, THEN stop the RCS pressure reduction.
[] RCS pressure is less than affected SG pressure, AND pressurizer level greater than 15%.
OR
[] Pressurizer level greater than 63%.
OR
[]SUBCOOLED MARGIN MONITOR indication less than 16°F subcooled in CETC mode.

**Distracter analysis**

A. Incorrect. First part is incorrect (See C.1). Plausible since the applicant may determine subcooling based on ruptured SG pressure vs. RCS pressure. This would be a common misconception since in a SGTR procedure the ruptured SG is the focus for determining SG pressure less than RCS pressure and is the pressure referred to when determining the required CETC temperature to cooldown to.
948 psig + 15 = 963 psia which is 540°F
540°F - 518°F = 22°F subcooling.

Second part is correct (See C.2).

B. Incorrect. First part is incorrect (See A.1).

Second part is incorrect (See C.2). Subcooling is greater than 16°F, however, RCS pressure is less than the affected SG pressure and pzr level is >15%.Therefore the pressure reduction is required to be stopped. Plausible since the subcooling is met and the Pzr level is <63%, so one more evaluation as to be done. This evaluation has two components and one of the two components is met. Also if the candidate were to compare RCS pressure vs one of the other two SG pressure, then the pressure reduction would be continued.

C. Correct. First part is correct.
916 psig + 15 = 931 psia which is ~536°F
536°F - 518°F = 18°F subcooling.

Second part is correct. AOP-2.0 has the operator evaluate 3 components, two of which do not require the RCS pressure reduction to be stopped. However, RCS pressure is less than affected SG pressure, (RCS pressure is 916 psig and SG pressure is 948 psig) AND pressurizer level greater than 15% (at 43%).

D. Incorrect. First part is correct (See C.1)

Second part is incorrect (See B.2).

| | |
|---|---|
| K/A: **037AK1.01** | Steam Generator (S/G) Tube Leak - Knowledge of the operational implications of the following concepts as they apply to Steam Generator Tube Leak: Use of steam tables |
| Importance Rating: | 2.9* 3.3 |
| Technical Reference: | FNP-1-AOP-2.0, Steam Generator Tube Leakage, Ver 35<br>Properties of saturated and superheated steam, 1967 |
| References provided: | Steam tables and AOP-2.0 step 34.2 Ver 35.0 |
| Learning Objective: | ANALYZE plant conditions and DETERMINE the successful completion of any step in AOP-2.0, SG Tube Leakage. (OPS-52520B07) |
| Question History: | MOD CATAWBA 09 |
| K/A match: | Applicant is required to **use the steam tables** to determine current value of subcooling and the **whether or not the RCS depressurization is required to be stopped during a SG tube leak scenario.** |
| SRO justification: | N/A |

31. 038EK3.02 031

Unit 1 has experienced a tube rupture on the 1C SG.

The operating crew is at the step in EEP-3.0, Steam Generator Tube Rupture, to "Check SI termination criteria."

- The following plant conditions are observed:
  - RCS Subcooling is 22°F and slowly rising.
  - RCS pressure is 950 psig and slowly rising.
  - Pressurizer level is 45% and slowly rising.
  - AFW flow is 450 gpm.
  - 1A SG NR level is 29% and slowly rising.
  - 1B SG NR level is 26% and slowly rising.
  - 1C SG NR level is 65% and rising rapidly.

Which one of the following completes the statements below?

SI termination criteria _(1)_ been met.

Per EEP-3.0, SI termination is necessary to prevent overfilling the _(2)_.

| | (1) | (2) |
|---|---|---|
| A. | has NOT | Steam Generator |
| B. | has NOT | Pressurizer |
| C.✔ | HAS | Steam Generator |
| D. | HAS | Pressurizer |

**EEP-3**

20 [CA] Check SI termination criteria.

20.1 Check SUBCOOLED MARGIN MONITOR indication - GREATER THAN 16°F{45°F} SUBCOOLED IN CETC MODE.

20.2 Check secondary heat sink available.

Total feed flow to SGs -
GREATER THAN 395 gpm
AVAILABLE.

**Narrow range level in at least one intact SG - GREATER THAN 31%{48%}.**

20.3 Check RCS pressure - STABLE OR RISING.

20.4 Check pressurizer level - GREATER THAN 13%{43%}.

**EEB-3**

Step 20 Basis: [...] **If SI flow is not terminated, leakage into the secondary will eventually fill the steam generator with water and lift the atmospheric relief valves.** This could damage the relief valve and main steamline which would complicate subsequent recovery and aggravate the radiological consequences. Hence, SI must be terminated when the criteria in subsequent steps are satisfied to prevent steam generator overfill

**Distracter analysis**

A. Incorrect. First part is incorrect (See C.1). Plausible if the applicant believes that due to the SI, adverse numbers are applicable. If they were applicable, then this would be a correct answer due to subcooling.

Second part is correct (See C.1)

B. Incorrect. First part is incorrect. (See A.1).

Second part is incorrect (See A.2). Plausible since this is the reason to terminate SI in EEP-0 and ESP-1.1 for a spurious SI. The applicant could confuse the basis for these procedures with the basis for the step in EEP-3.

C. Correct. First part in correct. SI termination criteria has been met.

Second part is correct. EEP-3 background document - **If SI flow is not terminated, leakage into the secondary will eventually fill the steam generator with water and lift the atmospheric relief valves.** This could damage the relief valve and main steamline which would complicate subsequent recovery and aggravate the radiological consequences**.** Hence, SI must be terminated when the criteria in subsequent steps are satisfied to prevent steam generator overfill

D. Incorrect. First part in correct (See C.2).

Second part is incorrect (See B.2)

**This question was written with these values for the following reasons:**
RCS subcooling is low but above the 16°F{45°F}. If adverse numbers were used it makes plausibility greater for this parameter.
Przr level is about where you would expect it after cooldown and depress and still above both parameters. 13%{43%} and to meet plausibility for KA.
SG NR is below value of **Narrow range level in at least one intact SG - GREATER THAN 31%{48%} but AFW flow is > 395 gpm. One does not meet SI termination and one does, and SGWL for 1C SG is so high to meet plausibility for KA.**

| | |
|---|---|
| K/A: **038EK3.02** | Steam Generator Tube Rupture (SGTR) - Knowledge of the reasons for the following responses as the apply to the SGTR: Prevention of secondary PORV cycling |
| Importance Rating: | 4.4 4.5 |
| Technical Reference: | FNP-1-EEP-3.0, Steam Generator Tube Rupture, Ver 27<br>FNP-0-EEB-3.0, Specific Background Document For FNP-1/2-EEP-3.0, Ver 2 |
| References provided: | None |
| Learning Objective: | STATE AND EXPLAIN the basis for all Cautions, Notes, and Actions associated with EEP-3, Steam Generator Tube Rupture. (OPS-52530D03) |
| Question History: | NEW |
| K/A match: | Requires the applicant to know that **preventing the SG PORVs from lifting due to filling the SGs solid will prevent a radiological release from the atmospherics.** |
| SRO justification: | N/A |

32. 039K1.09 032

Concerning R-70A/B/C, 1A/1B/1C SG TUBE LEAK DET, on Unit 1:

Which one of the following completes the statements below?

The R-70s are located _(1)_ of the MSIVs.
A minimum reactor power level that the R-70s can accurately estimate a SG leak rate is _(2)_ .

| | (1) | (2) |
|---|---|---|
| A.✔ | upstream | 25% |
| B. | downstream | 25% |
| C. | upstream | 10% |
| D. | downstream | 10% |

**FSD-A181015**
3.2.8 These detectors are located to monitor the main steam lines upstream of the safety relief valves for the presence of Nitrogen-16 activity in the steam lines and alert the operator when setpoints are exceeded.

**SOP-69**
Step 3.1 - **The system receives a reactor power input from power range channel N-43. IF N-43 fails OR is in Test OR is less than 20% power, THEN the system cannot accurately estimate a leak rate in the AV mode, and the indicators will display "PN <20%".** If desired, the Counting Room can configure the N-16 system in the ME counts per second (C/S) mode using FNP-0-CCP-31, LEAK RATE DETERMINATION. While not able to provide a leak rate determination, this mode can be used to indicate if leakage is increasing based on the indication trending up. The AV mode is the preferred mode of operation above 20% reactor power. The ME mode should only be utilized below 20% reactor power.

**Distracter analysis**

A. Correct. First part is correct. R-70s are located to monitor the main steam lines upstream of the safety relief valves.

Second part is correct. R-70s are accurate at reactor power >20%.

B. Incorrect. First part is incorrect (See A.1). Plausible if the applicant does not recall the location of these monitors.

Second part is correct (See A.2).

C. Incorrect. First part is correct (See A.1).

Second part is incorrect (See A.2). Plausible if the applicant fails to recall the power at which the R-70's are accurate.

D. Incorrect. First part is incorrect (See B.1).

Second part is incorrect (See C.2).

| | |
|---|---|
| K/A: 039K1.09 | Main and Reheat Steam System (MRSS) - Knowledge of the physical connections and/or cause-effect relationships between the MRSS and the following systems: RMS |
| Importance rating: | 2.7 2.7 |
| Technical Reference: | FSD-A181015, Radiation Monitoring System, Ver 14<br>FNP-1-SOP-69, N-16 Primary to Secondary Leak Detection System, Ver 5<br>D-175033, SH1, Main and Aux Steam, Ver 38 |
| References provided: | None |
| Learning Objective: | RELATE AND IDENTIFY the operational characteristics including design features, capacities and protective interlocks for the components associated with the Radiation Monitoring System to include those items in Table 4- Remote and Local Indications and Controls (OPS-40305A02).<br><br>RECALL AND DESCRIBE the physical in-plant location of those components associated with the Radiation Monitoring System, to include those items in Table 4- Remote and Local Indications and Controls (OPS-40305A03). |
| Question History: | MOD ROBINSON 04 |
| K/A match: | The applicant is required to know the **physical location /connection** of the R-70s in relation to the main steam system and the **cause-effect (power level)** of when the Rad monitors go into alarm. |
| SRO justification: | N/A |

33. 045K1.19 033

Which one of the following coincidences will cause an anticipated transient without trip (ATWT) mitigation system actuation circuitry (AMSAC) Main Turbine Trip?

(1) Turbine impulse pressure channels > 40%

**AND**

(2) SG NR levels < 10% for > 25 seconds.

| | (1) | (2) |
|---|---|---|
| A. | 1 of 2 | 2 of 3 |
| B.✔ | 2 of 2 | 2 of 3 |
| C. | 1 of 2 | 1 of 3 |
| D. | 2 of 2 | 1 of 3 |

**FSD- A181007 pg 2-37**

C-20 Interlock. Control interlock C-20 is used to enable the Anticipated Transient Without Trip (ATWT) Mitigation System Actuation Circuitry (AMSAC) . When turbine load is > 40% on 2/2 turbine impulse channel detectors and steam generator narrow range water level decreases to <10% on 2/3 steam generators for 25 seconds, the AMSAC system will trip the main turbine and provide an auto start signal to all AFW pumps. There is a time delay drop out associated with the impulse pressure portion of the signal such that for 260 sec after impulse pressure decreases below 40%, AMSAC is still enabled.

A. Incorrect. First part is incorrect (See B.1). Plausible since various control and permissive interlocks use a 1 of 2 logic to enable or disable functions. The applicant could confuse AMSAC (C-20) with any of these.

Second part is correct (See B.2).

B. Correct. First part is correct. 2 of 2 turbine impulse channels > 40% enables AMSAC.

Second part is correct. 2 of 3 SG NR levels < 10% for > 25% actuates AMSAC.

C. Incorrect. First part is incorrect (See A.1).

Second part is incorrect (See B.2). Plausible because the Low Low SGWL is 1 of 3 SGWL less that 28% NR. The applicant could improperly believe that AMSAC is 1 of 3 as is the Low Low SGWL logic.

D. Incorrect. First part is correct (See B.1).

Second part is incorrect (See C.2).

| | |
|---|---|
| K/A: 045K1.19 | Main Turbine Generator (MT/G) System - Knowledge of the physical connections and/or cause-effect relationships between the MT/G system and the following systems: ESFAS |
| Importance Rating: | 3.4* 3.6 |
| Technical Reference: | FSD-A181007, Reactor Protection System, Ver 18 |
| References provided: | None |
| Learning Objective: | DEFINE AND EVALUATE the operational implications of normal / abnormal plant or equipment conditions associated with the safe operation of the Main Turbine and Auxiliaries System components and equipment, to include the following (OPS-40202A07):<br><br>[…]<br>• Turbine Trips<br><br>Actions needed to mitigate the consequence of the abnormality. |
| Question History: | MOD CALLOWAY AUG 05 |
| K/A match: | AMSAC is listed as a back up to the reactor trip system and ESFAS in the FSAR. This question requires the applicant to know the **cause and effect** of relationship between AMSAC and the Main Turbine. Conditions which cause AMSAC to be enabled and produce a turbine trip. |
| SRO justification: | N/A |

34. 051AK3.01 034

Unit 1 is operating at 40% power when PR-4029, CONDENSER PRESSURE indicates as follows:

- PT0501 and PT0502 are 6 psia and rising rapidly.

Subsequently, Condenser pressure stabilizes at 12 psia.

Which one of the following completes the statements below?

The Steam Dump _(1)_ controller is enabled.

The Steam Dumps are _(2)_ .

| | (1) | (2) |
|---|---|---|
| A.✔ | Plant Trip | CLOSED |
| B. | Plant Trip | OPEN |
| C. | Loss of Load | CLOSED |
| D. | Loss of Load | OPEN |

C-9 Interlock. C-9 is the condenser-available interlock. This interlock allows the steam dump valves to be armed if the condenser is available. It also prevents an overpressure condition which could damage the condenser. To activate C-9, both condenser pressures shall be < 8 inches Hg vacuum, and 1/2 circulation water pump motor breakers must be shut.

8 inches of Hg vacuum is 10.8 psia.

**See references Figure 2, Sheet 10 of FSD-A181007.**

**Distracter analysis**

A. Correct. First part is correct. A turbine trip results which causes a reactor trip, thus enabling the plant trip controller.

Second part is correct. C-9 is NOT enabled at 12 psia therefore the steam dumps do not operate and are closed.

B. Incorrect. First part is correct (See A.1).

Second part is incorrect (See A.2) Plausible if the applicant cannot recall that the vacuum setpoint for the C-9 interlock is <10.8 psia and believes that adequate condenser vacuum exists for steam dump operation.

C. Incorrect. First part is incorrect (See A.1). Plausible if the applicant fails to recognize that the turbine trip causes a reactor trip at this power. If rx power were less than 35% then a rx trip would not occur and the turbine trip would cause the LOL controller to be the controlling controller.

Second part is correct (See A.2).

D. Incorrect. First part is incorrect (See C.1).

Second part is incorrect (See B.2)

| | |
|---|---|
| K/A: 051AK3.01 | Loss of Condenser Vacuum - Knowledge of the reasons for the following responses as they apply to the Loss of Condenser Vacuum: Loss of steam dump capability upon loss of condenser vacuum |
| Importance Rating: | 2.8* 3.1 |
| Technical Reference: | FSD-A181007, Reactor Protection System, Ver 18 |
| References provided: | None |
| Learning Objective: | RELATE AND IDENTIFY the operational characteristics including design features, capacities and protective interlocks for the following components associated with the Steam Dump System to include the components found on Figure 5, Steam-Dump Control (OPS-52201G02). |
| Question History: | FNP EXAM BANK |
| K/A match: | Requires the applicant to know on a **loss of vacuum** which controller the steam dumps will operate on and **the reason** the steam dumps will not operate (loss of capability). On a loss of vacuum the reason is **because** the C-9 interlock (vacuum) is not met. This is not stated in the stem but is inherent to the question. |
| SRO justification: | N/A |

35. 054AA2.05 035

Unit 1 is operating at 4% power. The following conditions exist:

- 1A SGFP is running.
- All SG NR levels are in the programmed band.
- FCV-479/489/499,1A/1B/1C SG FW BYP FLOW, controllers are in MANUAL and 35% open.

Subsequently, the 1A SGFP trips.

Which one of the following completes the statements below?

MOV-3232A/B/C, MAIN FW TO 1A/1B/C SG, will _(1)_.

FCV-479/489/499,1A/1B/1C SG FEED FLOW BYPASS FCVs, will _(2)_.

| | (1) | (2) |
|---|---|---|
| A. | remain OPEN | remain OPEN |
| B. | remain OPEN | CLOSE |
| C. ✔ | CLOSE | remain OPEN |
| D. | CLOSE | CLOSE |

For this event the applicant has to analyze the situation. For a SGFP trip, AOP-13 is required to be entered and a Rx trip is initiated >5% power. If the applicant thought the Rx was tripped, then the dumps would be controlling at 547°F and a FWI signal would be generated. This would directly affect the bypass valves. Since the bypass valves are rarely used, an applicant may not realize the link and open/close signals.
Since we are <5% power, the RTBs are not opened and AFW will auto start to raise SGWL due to both SGFPs tripped. This will keep level high. MOV-3232A/B/C close when both SGFPs are tripped. This has to be analyzed and known for these two particular valves.

**Distracter analysis**

A. Incorrect. First part is incorrect (See C.1). Plausible if the applicant thinks that this valve only automatically shuts on a feedwater isolation (FWI). A FWI has NOT occurred at this time.

Second part is correct (See C.1).

B. Incorrect. First part is incorrect (See A.1).

Second part is incorrect. (See C.1). Plausible if the applicant thinks that a FWI has occurred.

C. Correct. First part is correct. D175073, Sheet 1 shows that these valves close on a SGFP trip.

Second part is correct. The bypass valves are in manual and therefore remain open since there is NO feedwater isolation (FWI). A FWI occurs with a P-4 signal (Rx Trip) coincident with a low Tavg, Safety Injection and a Hi-Hi SGWL (P-14).

D. Incorrect. First part is correct (See C.1).

Second part is incorrect (See B.2).

| | |
|---|---|
| K/A: **054AA2.05** | Loss of Main Feedwater (MFW) - Ability to determine and interpret the following as they apply to the Loss of Main Feedwater (MFW): Status of MFW pumps, regulating and stop valves |
| Importance Rating: | 3.5 3.7 |
| Technical Reference: | D-175073, SH 1, Main Feedwater System, Ver 18<br>FSD-181007, Reactor Protection System, Ver 18 |
| References provided: | None |
| Learning Objective: | EVALUATE plant conditions and DETERMINE if entry into AOP-13, Loss of Main Feedwater is required. (OPS-52520M02) |
| Question History: | NEW |
| K/A match: | Requires the applicant to **determine the status of feed system STOP valves and bypass FCVs upon a loss of Main Feedwater.** |
| SRO justification: | N/A |

36. 055A3.03 036

Unit 1 is at 70% power with the following conditions:

- **R-15A, SJAE EXH**, is in alarm.
- **R-15B, TURB BLDG VNTL**, is in alarm.
- AOP-2.0, Steam Generator Tube Leakage, is in progress.
- The Turbine Building SO has placed the SJAE Filtration System in service.

Which one of the following completes the statement below?

After the SJAE Filtration system is placed in service, the reading on **R-15B** will _(1)_ and the SJAE Filtration system will _(2)_ .

| | (1) | (2) |
|---|---|---|
| A. | decrease | be aligned in a recirc alignment |
| B. | remain the same | be aligned in a recirc alignment |
| C.✓ | decrease | discharge to the Turbine Bldg roof |
| D. | remain the same | discharge to the Turbine Bldg roof |

**D170064/D-175027:**
These drawings show that R-15A is upstream of the normally off service SJAE filtration system. R-15B is downstream of the SJAE filtration system. When the SJAE filtration sytem is placed on service, R-15B reading will decrease. The SJAE filtration system discharges directly to the turbine building roof and cannot be diverted elsewhere.

**Distracter analysis**

A. Incorrect. First part is correct (See C.1).

Second part is incorrect (See C.2). Plausible since the turbine building ventilation system is capable of bypassing the SJAE filter system which is similar to a recirc alignment. Recirc would seem reasonable to minimize radioactive release to the outside atmosphere. The SJAE filtration system discharges directly to the turbine building roof and cannot be diverted elsewhere. The Penetration Room Filtration system on the rad side does have recirc alignment MOVs and a student could confuse the two systems or apply the concepts from one system to the other.

B. Incorrect. First part is incorrect (See C.1). Plausible if the applicant cannot recall the location of R-15B and believes it is upstream of the SJAE filtration system. R-15A is located before the SJAE filtration system and remain the same would be the correct answer.

Second part is incorrect (See A.2).

C. Correct. First part is correct. R-15B is downstream of the SJAE filtration system. When the SJAE filtration system is placed on service, R-15B reading will decrease.

Second part is correct. The SJAE filtration system discharges directly to the turbine building roof and cannot be diverted elsewhere.

D. Incorrect. First part is incorrect (See B.1).

Second part is correct (See C.2).

| | |
|---|---|
| K/A: **055A3.03** | Condenser Air Removal System (CARS) - Ability to monitor automatic operation of the CARS, including: Automatic diversion of CARS exhaust |
| Importance Rating: | 2.5* 2.7* |
| Technical Reference: | D-170064, SH1, Condenser Vacuum System, Ver 19<br>D-175027, SH 1, HVAC: TUBINE BLDG, Ver 21 |
| References provided: | None |
| Learning Objective: | LABEL, DRAW AND ILLUSTRATE the Condensate and Feedwater System flow paths, to include the components on the following figures (OPS-40201B05, Part A):<br><br>• Figure 3, Condenser Air Removal System |
| Question History: | MOD FNP 11 |
| K/A match: | Requires the applicant to **monitor the R-15B reading and determine its response when the SJAE filtration system is placed on service.** FNP has no automatic diversion of the SJAE exhaust system. (10/24/12) Chief Examiner said using manual diversion based on our plant design is acceptable. |
| SRO justification: | N/A |

37. 056AK3.02 037

Unit 1 is operating at 100% when a LOSP occurred. The following conditions exist:

- The Emergency Diesel Generators failed to energize the ESF busses.
- The operating crew is conducting a secondary depressurization per ECP-0.0, Loss Of All AC Power.
- SG pressures are as follows:
  - 1A SG: 245 psig and lowering
  - 1B SG: 247 psig and lowering
  - 1C SG: 244 psig and lowering

Which one of the following completes the statements below?

Per ECP-0.0, this secondary pressure reduction is required to _(1)_.

The reason the secondary pressure reduction is required to be stopped at the SG pressure specified in ECP-0.0 is to prevent _(2)_.

| | (1) | (2) |
|---|---|---|
| A.✔ | be STOPPED | injection of accumulator nitrogen into the RCS |
| B. | CONTINUE | injection of accumulator nitrogen into the RCS |
| C. | be STOPPED | a challenge to the Integrity Critical Safety Function |
| D. | CONTINUE | a challenge to the Integrity Critical Safety Function |

**ECP-0.0:**
17. Reduce intact SGs pressure to 260 psig.

**ECB-0.0:**
The target SG pressure for Step 16 should ensure that RCS pressure is above the minimum pressure to preclude injection of accumulator nitrogen into the RCS. The target SG pressure should be based on the nominal SG pressure to preclude nitrogen addition, plus margin for controllability (e.g., 100 psi).

**Distracter analysis**

A. Correct. First part is correct. Per ECP- 0.0, Reduce intact SGs pressure to 260 psig.

Second part is correct: Per ECB-0.0, [...] Should ensure that RCS pressure is above the minimum pressure to preclude injection of accumulator nitrogen into the RCS.

B. Incorrect. First part is incorrect (See A.1). Plausible since the limit in the background document is 160 psig. The limit in the procedure adds a 100 psig for margin of controllability and the applicant could confuse these two numbers and believe that the depressurization must continue.

Second part is correct (See A.2).

C. Incorrect. First part is correct (See A.1)

Second part is incorrect (See A.2). Plausible since this is the reason for the Tcold temperature limit of 280°F during the pressure reduction but NOT the reason for stopping at 260 psig.

D. Incorrect. First part is incorrect (See B.1)

Second part is incorrect (See C.2)

| | |
|---|---|
| K/A: **056AK3.02** | Loss of Offsite Power - Knowledge of the reasons for the following responses as they apply to the Loss of Offsite Power: Actions contained in EOP for loss of offsite power |
| Importance Rating: | 4.4 4.7 |
| Technical Reference: | FNP-1-ECP-0.0, Loss Of All AC Power, Ver 26<br>FNP-0-ECB-0.0, Specific Background Document for FNP-1/2-ECP-0.0, Ver 3.1 |
| References provided: | None |
| Learning Objective: | STATE AND EXPLAIN the basis for all Cautions, Notes, and Actions associated with (1) ECP-0.0, Loss of All AC Power; [...] (OPS-52532A03) |
| Question History: | NEW |
| K/A match: | This question presents a scenario where a **Loss of Offsite Power** occurs and the Emergency DGs fail to energize the ESF busses. The Applicant is required to **know the reason that the secondary depressurization is stopped at 260 psig (reasons for the actions contained in the EOP).** |
| SRO justification: | N/A |

38. 059A4.01 038

Unit 1 is operating at 100% power when the 1B SGFP trips.

Which one of the following completes the statements below for the 1B SGFP?

The HIGH PRESS. GOV. VALVE CLOSED light is _(1)_ .

The LOW PRESS. GOV. VALVE CLOSED light is _(2)_ .

| | (1) | (2) |
|---|---|---|
| A.✔ | LIT | LIT |
| B. | LIT | NOT lit |
| C. | NOT lit | LIT |
| D. | NOT lit | NOT lit |

**U-161792 - Tab 3, Section 5, Page 1**
When a trip condition occurs, signals from the electronic controller close the steam valves.

Ran on desktop simulator. Inserted SGFP trip from 100% power and both governor valves went closed.

**From OPS-52104C Ver 2 pg 15 -**
Initially, as the feed pump turbine accelerates from operation on the turning gear to operating speed, both the LP and HP stop valves are open. The first governor valve to open on an increase speed signal from the control system is the LP governor. Since reheat steam is not available, the turbine speed does not increase. Once the LP governor valves begin to reach their fully open position, the HP governor valve begins to open. The turbine now accelerates to the demanded speed using the main steam supply via the HP governor valve.

As main turbine load is increased, reheat steam pressure in the shell side of the MSRs also increases. At approximately 25 percent main turbine power, the reheat steam pressure is high enough to cause the feed pump turbine speed to increase. In an effort to maintain the desired feed pump turbine speed, the control system begins to shut the HP governor valve. Once the HP governor valve approaches the fully shut position, the control system starts closing the LP governor valves. During 100 percent power operation, the governor valve alignment is as follows:

1. The HP governor valve is fully shut.
2. The LP governor valve is throttled partially shut and consequently controls feed pump turbine speed.

** Some validators selected the correct answer but stated that they struggled with determining the response of governor valves when the SGFP tripped.*

**<u>Distracter analysis</u>**

A. Correct. First part is correct. The Servo controller shuts the HP governor valve when the SGFP turbine trips.

Second part is correct. The Servo controller shuts the LP governor valve when the SGFP turbine trips.

B. Incorrect. First part is correct (See A.1). Logical connection to the second part because this is the normal position of the HP governor valve at 100% power.

Second part is incorrect (See A.2). Plausible if the applicant thinks that the HP and LP Governor Valves remain in their pre-trip positions on a SGFP trip because the HP and LP STOP valves go shut.

C. Incorrect. First part in incorrect (See A.1). Plausible if the applicant thinks that the HP and LP Governor Valves remain in their pre-trip positions on a SGFP trip because the HP and LP STOP valves go shut. If the applicant thought the HP governor valve controlled speed at high power then it would make this a plausible correct answer coupled with the second part.

Second part is correct (See A.2). Logical connection to the first part if the applicant thinks that the HP governor valve controls speed at high power.

D. Incorrect. First part is incorrect (See A.1) Plausible if the applicant thinks that the HP and LP Governor Valves remain in their pre-trip positions on a SGFP trip because the HP and LP STOP valves go shut. Logical connection to the second part if the applicant thinks that both the HP and LP governor valves are open at 100% power.

Second part is incorrect (See A.2) Plausible if the applicant thinks that the HP and LP Governor Valves remain in their pre-trip positions on a SGFP trip because the HP and LP STOP valves go shut. Logical connection to the first part if the applicant thinks that both the HP and LP governor valves are open at 100% power.

| | |
|---|---|
| K/A: **059A4.01** | Main Feedwater (MFW) System - Ability to manually operate and monitor in the control room: MFW turbine trip indication |
| Importance Rating: | 3.1* 3.1* |
| Technical Reference: | U-161792, SGFP Drive Turbine and Accessories, Ver 12 |
| References provided: | None |
| Learning Objective: | EVALUATE plant conditions and DETERMINE if entry into AOP-13, Loss of Main Feedwater is required. (OPS-52520M02) |
| Question History: | DIABLO CANYON 12-07 |
| K/A match: | Requires the applicant to monitor MCB indications and determine the proper SGFP GOV valve positions on a SGFP trip. |
| SRO justification: | N/A |

39. 059AK2.01 039

Unit 2 is operating at 100% power when a SG tube leak occurs.

Which one of the following completes the statement below?

When R-23A, SGBD HX OUTLET, alarms, it will cause _____ , to automatically close.

A. HV-7614A/B/C, 2A/B/C SGBD ISO

B. ✔ FCV-1152, SGB INLET STOP VALVE

C. RCV-023B, SGBD DISCH TO ENVIRONMENT

D. HV-7697A/B, 7698A/B and 7699A/B, 2A/B/C SGBD ISO

**FH1**
**Automatic Actions:**
R23A :( Steam Generator Blowdown Processing) closes 2-BD-FCV-1152 S/G Blowdown Heat Exchanger Discharge Valve.

R-23A is in the SGBD line after FCV-1152 but before the SGBD Surge tank. R-23B is after the surge tank and is the last rad monitor and isolation signal before an accidental release would make it to the environment. R-23 A and B are often confused on the functions and locations. Two other sets of valves isolate SGBD due to other conditions, such as High Penetration room pressure and AFW autostart. All of these valves complete the same function but for different reasons.

**<u>Distracter analysis</u>**

A. Incorrect. See B. Plausible since these valves will isolate SG Blowdown (SGBD) and automatically close on an AFW autostart. The applicant could believe they also close on a high radiation signal.

B. Correct. R-23A automatically closes FCV-1152. FCV-1152 also closes on SGBD high ST level, High pressure in the SGBD system and High flow.

C. Incorrect. See B. Plausible since R-23B automatically closes RCV-23B and the applicant could confuse which radiation monitor closes which valve. RCV-023B will isolate SGBD to the environment and is downstream of FCV-1152.

D. Incorrect. See B. Plausible since these valves are two series isolation valves located inside the containment on each line from the steam generator. The air-operated isolation valves (7697A/B, 7698A/B, 7699A/B) automatically close when high pressure (0.28-0.33 psig) is sensed in any room outside the containment where the blowdown piping, upstream of the heat exchanger, is located. Since these valves isolate on High pressure in the PPRs, they could be confused with closing signals for FCV-1152.

| | |
|---|---|
| K/A: 059AK2.01 | Accidental Liquid Radwaste Release - Knowledge of the interrelations between the Accidental Liquid Radwaste Release and the following: Radioactive-liquid monitors |
| Importance Rating: | 2.7 2.8 |
| Technical Reference: | FNP-2-ARP-1.6, FH1 - RMS HI-RAD, Ver 70 |
| References provided: | None |
| Learning Objective: | RELATE AND IDENTIFY the operational characteristics including design features, capacities and protective interlocks for the components associated with the Radiation Monitoring System to include those items in Table 4-Remote and Local Indications and Controls (OPS-40305A02). |
| Question History: | FNP 06 |
| K/A match: | In this scenario, **a SG tube leak results in an accidental liquid radwaste release. The applicant is required to know the interrelations between R-23A and the SGBD system that will terminate the accidental liquid radwaste release.** |
| SRO justification: | N/A |

40. 059G2.2.44 040

Unit 1 is operating at 33% power and the following conditions exist:

- 1A and 1B Condensate pumps are running.
- 1C Condensate pump is in OFF with a CAUTION TAG that says, "EMERGENCY USE ONLY."
- 1A SGFP is running.

Subsequently, the 1B Condensate pump trips and the following conditions are observed:

KB4, SGFP SUCTION PRESS LOW, comes into alarm and the operating crew observes the following on PR4039, SGFP SUCT PRESS:

| Time | | | | |
|---|---|---|---|---|
| 0 sec | 10 sec | 20 sec | 30 sec | 40 sec |
| 300 psig | 275 psig | 265 psig | 270 psig | 285 psig |

**At time 20 seconds,** the 1C condensate pump was started.

Which one of the following completes the statements below?

**At time 30 seconds**, the 1A SGFP _(1)_ be tripped.

The operating crew is required to _(2)_.

A. 1) will NOT

2) rapidly reduce Turbine load using AOP-17.1, Rapid Turbine Power Reduction

B.✔ 1) will NOT

2) check SGFP suction pressure stabilizes

C. 1) WILL

2) trip the Reactor and enter EEP-0.0, Reactor Trip or Safety Injection.

D. 1) WILL

2) trip the Main Turbine and enter AOP-3.0, Turbine Trip Below P-9 Setpoint.

**Not a true 2+2 question to improve the plausibility of the distracters.**

**KB4 comes into alarm at 300 psig.**
At 275 psig decreasing on 2/3 pressure switches (PS625, PS626, PS627),
1. The standby condensate pump will start after 10 sec delay. (63IP relay)
2. The SGFP(s) will trip after 30 sec. delay (63IPX relay).

**AOP-13**
6.1 Check SGFP suction pressure stabilizes above 275 psig.

6.1.2 RNO:
IF suction pressure still falling, THEN reduce turbine load rapidly using FNP-1-AOP-17.1, RAPID TURBINE POWER REDUCTION.

**<u>Distracter analysis</u>**

A. Incorrect. First part is correct (See B.1).

Second part is incorrect (See B.2). Plausible since this is the action to take if the SGFP suction does NOT stabilize (6.1.2 RNO).

B. Correct. First part is correct. The SGFP's will trip 30 seconds after suction pressure falls below 275 psig which would be at 40 seconds in this scenario.

Second part is correct. This is the correct action per AOP-13 step 6.1 since suction pressure is rising and within the band to keep the SGFP from tripping at time 40 sec

C. Incorrect. First part is incorrect (See B.1) Plausible if the applicant confuses the condensate pump autostart setpoint with the SGFP trip. The standby condensate pump, if in AUTO, would start 10 seconds after SGFP suction pressure falls below 275 psig.
OR plausible if the applicant thought that when the low pressure alarm comes in the SGFP would trip 30 sec later.

Second part is incorrect (See B.2) Plausible since this is the correct response if the SGFP tripped.

D. Incorrect. First part is incorrect (See C.1).

Second part is incorrect (See B.2) Plausible since power is less than 35% (P-9) and tripping the turbine would stop most of the steam flow from the SG. This was the correct actions to take until 2 years ago when the station decided the most conservative action would be to trip the reactor if power is >5% power

| | |
|---|---|
| K/A: **059G2.2.44** | Main Feedwater System - Ability to interpret control room indications to verify the status and operation of a system, and understand how operator actions and directives affect plant and system conditions. |
| Importance Rating: | 4.2 4.4 |
| Technical Reference: | FNP-1-AOP-13, Condensate and Feedwater Malfunction, Ver 33 |
| References provided: | None |
| Learning Objective: | EVALUATE plant conditions and DETERMINE if any system components need to be operated while performing AOP-13, Loss of Main Feedwater. (OPS-52520M06). |
| Question History: | NEW |
| K/A match: | This question requires the applicant to **interpret the SGFP suction pressure to verify the status of the MFW system (SGFP is not tripped). Also, understand how operator actions, starting the 1C cond pump, and directives (AOP-13.0) affect the plant status which is to check that the suction pressure is rising and not reduce power or trip the reactor.** |
| SRO justification: | N/A |

41. 061A3.01 041

Unit 1 is in Mode 3 with the following conditions:

- 1A MDAFW pump was started per UOP-1.2, Startup of Unit From Cold Shutdown to Hot Standby.
- There are no other AFW pumps running.
- All SG NR levels are 65%.

Subsequently, power is lost to the 1A Startup Transformer.

Which one of the following completes the statements below?

The TDAFW Pump _(1)_ be running.

Total design AFW flow rate will be approximately _(2)_ gpm.

| | (1) | (2) |
|---|---|---|
| A.✔ | will NOT | 350 |
| B. | will NOT | 700 |
| C. | WILL | 700 |
| D. | WILL | 1050 |

**Not a true 2+2 question to improve distracter plausibility.**

The applicant has to evaluate how the loss of the 1A Startup transformer (SUT) affects the TDAFW and MDAFW pumps auto starts. Since the 1A SUT powers the 1A bus and the 1B SUT powers the 1B and 1C busses, only the 1A bus is lost. The opposite is true on Unit 2 so the applicant has to recall how each unit is configured.

Secondly, the applicant has to recall how the loss of power affects the MDAFW pumps. The 1B MDAFWP is unaffected since the 1G bus did not lose power as it is powered from 1B SUT. The 1A MDAFW pump did lose power and will be sequenced on the bus when the DG starts and the LOSP sequencer runs.

Thirdly, once the applicant determines which AFW pumps are running, then they will have to recall design flow rates for each (350 gpm for the MDAFW and 700 gpm for the TDAFW pump) to determine total approximate flow.

**Distracter analysis**

A. Correct. First part is correct. FSD-A181010 - 3.9.2.3 - The TDAFW pump shall start by opening the steam supply valves to the turbine drive **on a loss of power signal**, low-low water level signals from two out of three level transmitters of any two out of three steam generators, or an AMSAC signal. The loss of power signal comes from the loss of power to 2 of 3 RCP busses (1A, 1B and 1C). **Since ONLY the 1A bus loses power, the TDAFW pump does**

**not start.)**

Second part is correct. The 1A MDAFWP pump will autostart and the FCV's will open fully providing ~350 gpm design flow.

.

B. Incorrect. First part is correct (See A.1).

Second part is incorrect (See A.2). Plausible if the applicant incorrectly thinks an LOSP has occurred which would start 2 MDAFWP's and provide approx 700 gpm flow.

C. Incorrect. First part is incorrect (See A.1). Plausible if the applicant confuses the Startup transformer alignment with Unit 2. The TDAFW pump on Unit 2 would start under these conditions.

Second part is incorrect (See A.2). Plausible if the applicant doesn't recall that the MDAFWP receives an auto start signal during an LOSP. This would make this a logical connection to the first part and a correct answer if the applicant thought that only the TDAFW pump started.

D. Incorrect. First part is incorrect (See C.1).

Second part is incorrect (See A.2).Plausible since this is the design flow for one MDAFW pump and the TDAFW pump and a logical connection to the first part if the applicant thought that the TDAFW pump started.

| | |
|---|---|
| K/A: **061A3.01** | Auxiliary / Emergency Feedwater (AFW) System - Ability to monitor automatic operation of the AFW, including: AFW startup and flows |
| Importance Rating: | 4.2 4.2 |
| Technical Reference: | FSD-A181010, Auxiliary Feedwater System, Ver 25<br>FSD-A181007, Reactor Protection, Ver 18<br>U166235, Primary Coolant Trip Signals, Ver 2<br>A506250, U1 Load List, Ver 74 |
| References provided: | None |
| Learning Objective: | RELATE AND IDENTIFY the operational characteristics including design features, capacities and protective interlocks for the components associated with the AFW System to include the components found on Figure 2, Auxiliary Feedwater System, Figure 3, TDAFWP Steam Supply, and Figure 4, Air Supply to TDAFWP Steam Admission Valves (OPS-40201D02).<br><br>NAME AND IDENTIFY the Bus power supplies (Off-site sources and Emergency source-to- Load), for those electrical components associated with the AFW System to include those items in Table 3- Power Supplies (OPS-40201D04).<br><br>SELECT AND ASSESS the AFW System instrument/equipment response expected when performing auxiliary feedwater evolutions including (OPS-52102H05):<br>[...]<br>The Failed Condition<br>[...]<br>Associated Trip Setpoint(s)<br>[...] |
| Question History: | NEW |
| K/A match: | The applicant is required to **evaluate the loss of power and determine which AFW pump auto starts (monitor startup) and the resultant flow (monitor flow).** |
| SRO justification: | N/A |

42. 061K5.01 042

Unit 1 was operating at 100% power when a Reactor Trip occurred and the following conditions exist:

- ESP-0.1, Reactor Trip Response, has just been entered.
- Pressurizer level is 12% and slowly lowering.
- SG NR levels are 40% and slowly rising.
- Tavg is 534°F and slowly lowering.
- RCS pressure is 2050 psig and slowly lowering.

Which one of the following actions will be performed FIRST as required by ESP-0.1 to address the cooldown?

A.✔ Minimize total AFW flow.

B. Emergency borate the RCS.

C. Close all MSIVs and MSIV Bypass Valves.

D. Manually initiate SI and return to EEP-0.0, Reactor Trip or Safety Injection.

**ESP-0.1 -**
Step 1.1 RNO:
IF RCS temperature less than 547°F and falling, THEN perform the following. IF NOT, THEN proceed to RNO Step 1.2.

Step 1.1.4 RNO:
IF cooldown continues, THEN minimize total AFW flow.

**Distracter analysis**

| | |
|---|---|
| A. Correct | Step 1.1.4 RNO of ESP-0.1 has the operator minimize AFW to stop the cooldown. |
| B. Incorrect. | See A. Plausible since this is an action in ESP-0.1 if Tavg falls below 525°F. This action is at step 4 and would not be required since Tavg is >525°F. The applicant could confuse this temperature limit to emergency borate with P-12, 543°F Lo-Lo Tavg. |
| C. Incorrect. | See A. This is done AFTER AFW flow is reduced at step 1.1.5 . Plausible since this would address the cooldown. Also there are a number of steps completed before the AFW flow is addressed that equates to steam in the TB reduced, and stm dumps checked. |
| D. Incorrect. | See A. Plausible because the Pzr level meets the SI reinitiation criteria (13%) for a number of other Emergency procedures (such as ESP-1.1) and the applicant could confuse it with the correct Pzr level SI initiation criteria of ESP-0.1 foldout page of 4%. |

| | |
|---|---|
| K/A: **061K5.01** | Auxiliary / Emergency Feedwater (AFW) System - Knowledge of the operational implications of the following concepts as the apply to the AFW: Relationship between AFW flow and RCS heat transfer |
| Importance Rating: | 3.6 3.9 |
| Technical Reference: | ESP-0.1, Reactor trip Response, Ver 32. |
| References provided: | None |
| Learning Objective: | EVALUATE plant conditions and DETERMINE if any system components need to be operated while performing ESP-0.1, Reactor Trip Response. (OPS-52531B06) |
| Question History: | INDIAN POINT 07 |
| K/A match: | The applicant is required to know that in order **to stop the excessive RCS cooldown (operational implication), they must know that reducing AFW flow will reduce the heat transfer rate of the RCS.** |
| SRO justification: | N/A |

43. 062AA1.07 043

Unit 2 is operating at 100% power. The following conditions exist:

- SGBD is on service.
- #1 WMT release is in progress.
- The service water pond level has dropped to 179 feet, 10 inches.

Which one of the following combinations predicts the plant response to the change in pond level?

A. ✓ 1) SW Dilution Flow on FR-4107, SW DILUTION FLOW, will lower;

2) RCV-023B, SGBD DISCH TO ENVIRONMENT, will automatically close.

B. 1) SW Dilution Flow on FR-4107, SW DILUTION FLOW, will lower;

2) RCV-018, WMT DISCH TO ENVIRONMENT, will automatically close.

C. 1) SW Pressure on PI-3001A & B, SW TO CCW HX HDR PRESS, will lower;

2) PCV-562 and 563, TRN B (A) DILUTION BYPASS PCV, will fully open.

D. 1) SW Pressure on PI-3001A & B, SW TO CCW HX HDR PRESS, will lower;

2) MOV-538 and 539, SW B (A) HDR EMERG RECIRC TO POND, will fully open.

**Not a true 2+2 to improve distracter plausibility.**

**SOP-16.1**
4.5 Defeating the Low SW Dilution Flow Trip of N2G24RCV023B
**NOTES**
• At low dilution flow below 14,500 GPM SGBD will isolate [...]

**AOP-31**
**2.** At a pond level of 180 ft 0 in the following sequence of events occurs

• SW A(B) HDR EMERG RECIRC TO POND valves on both units will open.
• SW HDR NORMAL DISCH ISO A(B) TRN valves on both units will close.
• SW TO WET PIT EAST(WEST) HDR ISO valves will open.
• SW TO POND EAST(WEST) HDR ISO will partially close to divert approximately 50% of the SW recirculation flow to the wet pit.

Ran on desk top simulator and Discharge pressure ROSE ~1.5 psig

**<u>Distracter analysis</u>**

A. Correct — First part is correct. When the pond level drops to 180 ft 0 in, the SW the SW system changes valve alignments such that the emergency recircs to the pond open and the discharges from each train closes which lowers the dilution flow as seen on FR-4107.

Second part is correct. The dilution line flow drops to less than 14,500 gpm (goes to 0 gpm), which in turn causes the auto-closure of RCV-023B, terminating this Release path. See D200013 for line up.

B. Incorrect. First part is correct (See A.1)

Second part is incorrect (See A.2). RCV-018 does not have a low dilution line auto closure. Plausible since RCV-023B is also a radioactive release point isolation and will close on both High Radiation and Low Flow so the applicant could think it also closed on low flow.

C. Incorrect. First part is incorrect (See A.1). SW discharge pressure is virtually unchanged due to the lineup. When run on desk top simulator, pressure ROSE ~1.5 psig. Plausible since the SW header will operate on RECIRC back to the POND, the applicant may believe this would cause a lowered backpressure on SW header which would translate into a higher flow but at a lower pressure (Centrifugal pump curves).

Second part is incorrect (See A.2). Since SW discharge pressure is virtually unaffected then these valves will NOT fully open because discharge pressure is less than 110 psig. Plausible if the applicant believes that the system "DILUTION BYPASS" valves open to ensure a minimum dilution flow is maintained for Radioactive releases.

.

D. Incorrect. First part is incorrect (See C.1).

Second part is correct. These valves open on a low level in the SW pond but will not lower pressure.

| | |
|---|---|
| K/A: **062AA1.07** | Loss of Nuclear Service Water - Ability to operate and / or monitor the following as they apply to the Loss of Nuclear Service Water (SWS): Flow rates to the components and systems that are serviced by the SWS; interactions among the components |
| Importance Rating: | 2.9 3.0 |
| Technical Reference: | FNP-2-SOP-16.1, SG Blowdown Processing System, Ver 43.2<br>FNP-0-AOP-31, Loss of Service water Pond, Ver 12<br>FNP-2-SOP-24, Service Water System, Ver 73<br>FSD-A181001, Service Water System, Ver 61<br>D-200013, Sh 8, Service Water System, Ver 36 |
| References provided: | None |
| Learning Objective: | DEFINE AND EVALUATE the operational implications of normal / abnormal plant or equipment conditions associated with the safe operation of the Service Water System components and equipment, to include the following (OPS-40101B07):<br><br>[...]<br>• Automatic actuation including setpoint (example SI, Phase A, LOSP)<br>• Protective isolations such as high flow, low pressure, low level including setpoint<br>• Protective interlocks<br>[...] |
| Question History: | FNP 12. The bank was checked and this question is the only one that meets this K/A. We have spent hours developing this question and have encountered difficulty in the final product due to our system design. |
| K/A match: | Requires the applicant to know what they are expecting to see **(monitor) on the MCB (PI-3001 and FR4107) and what will occur due to the flow to other system components (interactions among the components).** The candidate will have to know what happens to the SW system on low pond level (loss of SW) and then the effects of the new valve line up on system pressure and flow to other system components (ie. RCV-18 and 23B and PCV-562 and MOV-538). |
| SRO justification: | N/A |

44. 062K3.01 044

The following conditions exist on Unit 2:

- DG02-2, 2G 4160 V bus tie to 2L 4160 V bus, has tripped opened.

Which one of the following completes the statement below?

The ____ has lost Service Water cooling.

A. 2C Instrument Air Compressor

B. ✔ 2C Reactor Coolant Pump Motor Air Cooler

C. 2C Component Cooling Water Heat Exchanger

D. Steam Generator Blowdown Heat Exchanger

**AOP-10**:
Step 15. Minimize SW loads in affected train.
15.2 For **'A' train** affected minimize 'A' TRAIN SW LOADS as required.
15.2.1 **Secure SGBD** using FNP-2-SOP-16.1, STEAM GENERATOR BLOWDOWN PROCESSING SYSTEM.
15.2.2 Close SW to blowdown and BTRS heat exchangers valve.
SW TO BLDN HX & BTRS CHLRS
[] Q2P16MOV3149 - closed

15.3 For **'B' train** affected minimize B TRAIN SW LOADS, as required.
15.3.1 **Close SW to RCP motor air coolers.**
SW TO RCP
MTR AIR CLRS
[] Q2P16MOV3135 - closed

**U2 Load List**:
2L 4160V bus is the power supply to the B Train SW pumps. When that power supply is lost, All B Train SW pumps will be lost and cooling to B Train components are affected.

**Distracter analysis**

A. Incorrect. See B. Plausible since the 2C designation could make the applicant believe this is a 'B' train component. All instrument air compressors are normally supplied from a common SW header, which is fed from both trains of SW.

B. Correct. ALL RCP motor air coolers are supplied from "B" Train SW.

C. Incorrect. See B. 2C CCW Heat Exchanger is supplied from "A" Train SW. Plausible since 2C is an A Train component and 2A is B Train component and this is a common mistake made for these components.

D. Incorrect. See B. The SGBD Heat Exchanger is supplied only from "A" Train SW. Plausible since this and the RCPs each are supplied from different trains and a common mistake made by students as to which train supplies which components.

| | |
|---|---|
| K/A: **062K3.01** | A.C. Electrical Distribution - Knowledge of the effect that a loss or malfunction of the ac distribution system will have on the following: Major system loads |
| Importance Rating: | 3.5 3.9 |
| Technical Reference: | FNP-2-AOP-10, Loss of Service Water, Ver 18<br>A-351199, Unit 2 Load List, Ver 61. |
| References provided: | None |
| Learning Objective: | RELATE AND DESCRIBE the effect(s) on the Service Water System for a loss of an AC or DC bus, or a malfunction of the Instrument Air System (OPS-40101B06). |
| Question History: | FNP EXAM BANK |
| K/A match: | **The 2L 4160V bus has been lost due to a malfunction** and the **effect is the loss of cooling to various major systems loads. The applicant will have to know which SW pumps have lost power and then equate that to which major system load has lost cooling.** |
| SRO justification: | N/A |

45. 063A1.01 045

Unit 1 has experienced a Reactor trip with the following conditions:

- A Loss of All AC has occurred.
- ECP-0.0, Loss of All AC Power, is in progress.

Which one of the following completes the statements below?

The 1B Aux Building DC bus voltage will __(1)__.

Per ECP-0.0, there may not be enough DC capacity to start a DG and sequence needed loads if power is not restored to the 125V DC battery chargers on each train within a MINIMUM of __(2)__.

A.✔ 1) drop slowly at first; then later drop rapidly as the battery nears exhaustion

2) 30 min

B. 1) drop slowly at first; then later drop rapidly as the battery nears exhaustion

2) 90 min

C. 1) drop at a constant, linear rate the entire time the battery discharges

2) 30 min

D. 1) drop at a constant, linear rate the entire time the battery discharges

2) 90 min

DOE Fundamentals Handbook Vol 2 of 4, Jun 1992 (This is a reference for lesson plan OPS-30501D, Batteries.) - During Battery discharge, voltage will slowly drop until the battery approaches exhaustion. As the battery approaches exhaustion, voltage will decrease exponentially until exhaustion.

**ECP-0.0 Caution prior to Step 5:**
IF power is not restored to the 125 V DC battery chargers on each train within 30 minutes, THEN there may not be enough DC capacity to start a DG and sequence needed loads.

**Distracter analysis:**

A. Correct. First part is correct. The battery voltage will drop slowly then at an exponential rate towards the end of discharge per the graph in the references.

Second part is correct. Per the Note, 30 minutes is the minimum time in which the battery charger must be restored to ensure the DG can start and sequences loads.

B. Incorrect. First part is correct (See A.1).

Second part is incorrect (See A.1). Plausible since the design capacity of the Aux building battery is 2 hours. 90 minutes would give a 30 minute buffer so the applicant could confuse the 30 minutes in the note with "30 minutes left" of the 2 hour design battery capacity.

C. Incorrect. First part is incorrect (See A.1). Plausible if the applicant is not familiar with battery discharge characteristics.

Second part is correct (See A.2).

D. Incorrect. First part is incorrect (See C.1).

Second part is incorrect (See B.2).

| | |
|---|---|
| K/A: **063A1.01** | D.C. Electrical Distribution - Ability to predict and/or monitor changes in parameters associated with operating the DC electrical system controls including: Battery capacity as it is affected by discharge rate |
| Importance Rating: | 2.5 3.3 |
| Technical Reference: | FNP-1-ECP-0.0, Loss of All AC Power, Ver 26.<br>DOE Fundamentals Handbook Vol 2 of 4, Jun 1992 |
| References provided: | None |
| Learning Objective: | STATE AND EXPLAIN the basis for all Cautions, Notes, and Actions associated with (1) ECP-0.0, Loss of All AC Power; [...] P-0.2, Loss of All AC Power Recovery, With SI Required. (OPS-52532A03) |
| Question History: | MOD FNP11/12 NRC exam |
| K/A match: | Requires the applicant to **predict the change in battery voltage (parameters) as the battery is discharged (capacity versus discharge rate)** during a Loss of All AC event. In addition, knowledge of the time expected to restore the battery charger (30 mins) to prevent the LOSS of DC POWER, which equates to the time limit (how long can we operate this way) that the battery capacity is affected. |
| SRO justification: | N/A |

46. 064K3.02 046

A loss of all AC power has occurred on Unit 1 and the following conditions exist:

- VA2, 1B DG GEN FAULT TRIP, has come into alarm.
- The crew has completed the step in ECP-0.0, Loss Of All AC Power, to verify breakers for major loads OPEN.
- A Safety Injection occurs on Unit 1 at this time.

Which one of the following completes the statements below?

The 2C DG will be started from the EPB in _(1)_ using the START pushbutton.

All ESF loads will _(2)_.

A. 1) Mode 2

2) automatically start

B. 1) Mode 2

2) have to be manually aligned

C. 1) Mode 1

2) automatically start

D. ✔ 1) Mode 1

2) have to be manually aligned

**ECP-0.0**
5.2.1 RNO Perform 2C DG SBO start as follows.

5.2.1.1 RNO Verify 2C DG MODE SELECTOR switch in MODE 1.

Note before Step 5.2.1.5 -
NOTE: The LOSP sequencer should run when output breaker closes, if no SI signal is present. If an SI signal is present, neither sequencer will run and SI loads must be started manually.

**Distracter analysis**

A. Incorrect. First part is incorrect (See D.1). Plausible since all other DGs would be started in Mode 2 in ECP-0.0.

Second part is incorrect (See D.1). Plausible since the ESF sequencer would run if it were the 1-2A or 1B DG that was started. The operation of the 2C DG in this scenario is complicated and easily confused.

B. Incorrect. First part is incorrect (See A.1).

Second part is correct (See D.2)

C. Incorrect. First part is correct (See D.1)

Second part incorrect (See A.2)

D. Correct. First part is correct. Step 5.2.1.1 RNO of ECP-0.0 starts the 2C DG in Mode 1.

Second part is correct. The note before step 5.2.1.5 RNO of ECP-0.0 states that under the conditions in the stem, the SI sequencer will NOT run and ESF loads must be manually aligned.

| | |
|---|---|
| K/A: **064K3.02** | Emergency Diesel Generators (ED/G) - Knowledge of the effect that a loss or malfunction of the ED/G system will have on the following ESFAS controlled or actuated systems. |
| Importance Rating: | 4.2 4.4 |
| Technical Reference: | FNP-1-ECP-0.0, Loss of All AC Power, Ver 26 |
| References provided: | None |
| Learning Objective: | EVALUATE plant conditions and DETERMINE if any system components need to be operated while performing (1) ECP-0.0, Loss of All AC Power; [...] (OPS-52532A06)<br><br>ANALYZE plant conditions and DETERMINE if actuation or reset of any Engineered Safety Features Actuation Signal (ESFAS) is necessary. (OPS-52532A05) |
| Question History: | FNP 07 |
| K/A match: | This requires the applicant to **know what effect a 1B DG malfunction has on the ESFAS system in that ESF loads must be manually aligned.** |
| SRO justification: | N/A |

47. 064K6.07 047

Unit 1 is operating at 100% power with the following conditions:

- A problem with 1B DG starting air system has occurred.
- The B Air receiver has been tagged out.

Which one of the following completes the statement below?

A MINIMUM of _(1)_ psig must be available in the remaining air receiver to ensure five (5) start attempts are available.

1B DG's required minimum time to reach rated speed and voltage is _(2)_ seconds after receiving an emergency start signal.

| | (1) | (2) |
|---|---|---|
| A. | 200 | 7 |
| B. | 200 | 12 |
| C. | 350 | 7 |
| D.✔ | 350 | 12 |

**FSD - A181005:**
**2.1.2 -** The DGS shall be capable of achieving > 3952 V and > 57 Hz within 12 seconds after receipt of an engine start signal

**Tech Specs Bases: 3.8.3** - With both starting air receiver pressures on a DG < 350 psig for the 4075 kW DGs or < 200 psig for DG 1C, sufficient capacity for five successive DG start attempts does not exist.

**ANSWER / DISTRACTOR ANALYSIS**

A. Incorrect. First part is incorrect (See D.1). Plausible if candidate thinks that the 1B DG is a "little DG" (Fairbanks Morse) instead of a "Big DG" (Colt Peilstick) which would make this a correct answer.

Second part is incorrect (See D.2). Plausible if the candidate confuses the required time to reach 115 RPM for the Fail to Start DG trip with the time to achieve rated voltage and speed. 7 seconds in not a subset of 12 seconds. 12 seconds is the requirement which implies a maximum and any time > 7 seconds but ≤ 12 seconds would be acceptable also.

B. Incorrect. First part is incorrect (A.1).

Second part is correct (See D.2).

C. Incorrect. First part is correct (See D.1).

Second part is incorrect (See A.2).

D. Correct. First part is correct. The 1B DG is required to have one air receiver >350 psig to have 5 start attempts available.

Second part is correct. The DGS shall be capable of achieving > 3952 V and > 57 Hz within 12 seconds after receipt of an engine start signal

| | |
|---|---|
| K/A: **064K6.07** | Emergency Diesel Generators (ED/G) - Knowledge of the effect of a loss or malfunction of the following will have on the ED/G system: Air receivers |
| Importance Rating: | 2.7 2.9 |
| Technical Reference: | FSD-A181005, Diesel Generator, Ver 44<br>FNP Tech Specs Bases, Amendment No. 58 |
| References provided: | None |
| Learning Objective: | RECALL AND APPLY the LCO and APPLICABILITY for Technical Specifications (TS) or TRM requirements, and the REQUIRED ACTIONS for 1 HR or less TS or TRM requirements, and the relevant portions of BASES that DEFINE the OPERABILITY and APPLICABILITY of the LCO associated with the Diesel Generator and Auxiliaries System components and attendant equipment alignment, to include the following (OPS-52102I01):<br><br>[...]<br>3.8.3, Diesel Fuel Oil, Lube Oil, Starting Air |
| Question History: | NEW |
| K/A match: | Requires the applicant to know how a **malfunction of the DG air start receivers affect the operation of the ED/G system.** |
| SRO justification: | N/A |

48. 065AG2.4.11 048

Unit 1 was operating at 100% power when the following occurred:

- A complete loss of instrument air caused an automatic Reactor Trip.

The following conditions exist:

- All AFW pumps are running.
- All SG NR Levels are 25% and rising.
- The Shift Supervisor has directed AFW flow to be reduced.

Per AOP-6.0, Loss of Instrument Air, which one of the following methods below will be successful in reducing AFW flow?

Valve nomenclature:
- HV-3228A / B / C, TDAFWP TO 1A/1B/1C SG
- MOV-3764A / D / F, MDAFWP TO 1A/1B/1C SG ISO
- MOV-3350A / B / C, AFW TO 1A/1B/1C SG STOP VLV

A. Place BOTH MDAFW pump MCB hand switches in the STOP position and release them.

B. Throttle HV-3228A / B / C on the MCB.

C. ✓ Close MOV-3764A / D / F on the BOP.

D. Close MOV-3350A / B / C on the MCB.

**AOP-6**
Step 8. Maintain SG narrow range levels between 35-69%.

8.1 RNO WHEN required to limit SG level rise,
THEN perform the following:.

a) Alternately cycle closed and open one
MDAFWP isolation valve to each SG.

[ ] MDAFWP TO 1A SG ISO,
Q1N23MOV3764A(E)
[ ] MDAFWP TO 1B SG ISO,
Q1N23MOV3764B(D)
[ ] MDAFWP TO 1C SG ISO,
Q1N23MOV3764C(F)

b) STOP/START MDAFWPs as required.
[ ] 1A MDAFWP
[ ] 1B MDAFWP

**<u>Distracter analysis</u>**

A. Incorrect. See C. Plausible since this is a method per AOP-6 step 8.1 RNO but since SG NR Level is less than 28%, the MDAFW pumps cannot be stopped due to the auto-start signal. The applicant may not recall the MDAFW pump start logic and believe the pumps can be stopped.

B. Incorrect. See C. Plausible if the applicant believes that the air receiver that keeps the TDAFW pump steam admission valves open is also used to control the TDAFW pump FCVs.

C. Correct. Of the available choices, this is the only method to control AFW flow per AOP-6. Step 8 of AOP-6 also directs the use of the MDAFW and TDAWF FCV's locally but these are not an available choice due to the loss of air

D. Incorrect. See C. Plausible since these valves are not addressed in AOP-6.0 and do not have power supplied during full power ops. Plausible since these valves are used in AOP-4.0 on loss of RCP flow to stop AFW flow and could be used to stop flow to all SGs if power was supplied to the MOV.

| | |
|---|---|
| K/A: **065AG2.4.11** | Loss of Instrument Air - Knowledge of abnormal condition procedures. |
| Importance Rating: | 4.0 4.2 |
| Technical Reference: | FNP-1-AOP-6.0, Loss Of Instrument Air, Ver 40 |
| References provided: | None |
| Learning Objective: | ANALYZE plant conditions and DETERMINE the successful completion of any step in AOP-6.0, Loss of Instrument Air. (OPS-52520F07) |
| Question History: | FNP EXAM BANK |
| K/A match: | Applicant must know what equipment is directed to be used by AOP-6 to control the cooldown rate. |
| SRO justification: | N/A |

49. 068AK2.07 049

There is a fire in the Control Room and the following conditions exist for Unit 1:

- FNP-1-AOP-28.2, Fire In The Control Room, has been entered.

Which one of the following completes the statements below?

During the conduct of AOP-28.2, the Diesel Generators are required to be placed in _(1)_ and the output breakers _(2)_ automatically close when the DGs are started after a Loss of Offsite Power.

| | (1) | (2) |
|---|---|---|
| A. | MODE 3 | WILL |
| B. | MODE 3 | will NOT |
| C. | MODE 4 | WILL |
| D. ✔ | MODE 4 | will NOT |

**AOP-28.2**
**Step 6.3.1 -** Dispatch personnel to the diesel building to perform ATTACHMENT 18, PLACING DIESEL GENERATORS IN LOCAL CONTROL.

**Attachment, 18 Step 1 -** PLACE 1B DIESEL IN MODE 4.

**Attachment 21, Note prior to Step 1.10** - Diesel generator and diesel generator output breaker must be controlled locally (155' DG BLDG) while diesel generator is in MODE 4.

**Distracter analysis**

A. Incorrect. First part is incorrect (See C.1). Plausible if the applicant assumes that the most reliable condition of the DGs in this scenario would be in Mode 3 as in AOP-49.2, Complete Loss of Service Water.

Second part is incorrect (See C.2). Plausible because this would be the correct answer if the DG was required to be in Mode 1 per AOP-28.2. Once the DG's are no longer in MODE 1 (MODE 2, 3 or 4), applicants can have difficulty recalling how the output breaker responds on a DG start for an LOSP)

B. Incorrect. First part is incorrect (See A.1).

Second part is correct (See D.2). This is a logical connection to the first part if the applicant improperly believes that control power to the DG output breakers is removed as part of shifting local control of the Main Control Room operated equipment to the HSDP. The RCP breakers are tripped locally and have control power removed per AOP-28.2.

C. Incorrect. First part is correct (See D.1).

Second part is incorrect (See C.2). Plausible if the applicant failed to recall that the DG output breaker will NOT automatically close when started in Mode 4 after a loss of power.

D. Correct. First part is correct. Step 6.3.1 requires the DGs to be placed in MODE 4.

Second part is correct. While in MODE 4, the DG output breaker will NOT automatically close.

| | |
|---|---|
| K/A: **068AK2.07** | Control Room Evacuation - Knowledge of the interrelations between the Control Room Evacuation and the following: ED/G. |
| Importance Rating: | 3.3 3.4 |
| Technical Reference: | FNP-1-AOP-28.2, Fire In The Control Room, Ver 28 |
| References provided: | None |
| Learning Objective: | EVALUATE plant conditions and DETERMINE if any system components need to be operated while performing AOP-28.1, Fire or Inadvertent Fire Protection System Actuation in the Cable Spreading Room, and AOP-28.2, Fire in the Control Room. (OPS-52521C06) |
| Question History: | NEW |
| K/A match: | Requires the applicant to know the **interrelation of the DG mode of operation to a control room evacuation.** |
| SRO justification: | N/A |

50. 071K3.05 050

Unit 1 is operating at 100% power with the following conditions:

- The 1A Waste Gas Compressor is running and aligned to #7 WGDT.
- R-13, WGC SUCT, alarms.

Subsequently, the #7 WGDT relief valve lifts and fails to reseat.

Which one of the following completes the statements below?

R-22, VENT STACK GAS, _(1)_ trend up.

#7 WGDT relief valve _(2)_ be manually isolated.

| | (1) | (2) |
|---|---|---|
| A.✔ | WILL | CANNOT |
| B. | WILL | CAN |
| C. | will NOT | CANNOT |
| D. | will NOT | CAN |

**D-175045 SH 1**: Shows R-22 located in the vent stack.

**D175042 SH 6**, Shows that the #7 WGDT relief discharges to the vent stack and has no manual isolations.

**Distracter analysis**

A. Correct. First part is correct. #7 WGDT relief valve discharges to the vent stack and would cause R-22 to trend up since the 1A Waste Gas Compressor is aligned to it and the compressor suction has a high rad alarm.

Second part is correct. There is no manual isolations for the #7 WGDT relief valve.

B. Incorrect. First part is correct (See A.1).

Second part is incorrect (See A.2). Plausible since some systems have isolation valves upstream of their relief valves such as LP Feedwater heaters (See 170116 SH 1 in reference material).

C. Incorrect. First part is incorrect (See B.1). Plausible because WGDT 1 through 6 relieve to #8 WGDT and the applicant could think that #7 also relieved to #8 WGDT.

Second part is correct (See A.2).

D. Incorrect. First part is incorrect (See C.1).

Second part is incorrect (See B.2).

| | |
|---|---|
| K/A: **071K3.05** | Waste Gas Disposal System (WGDS) - Knowledge of the effect that a loss or malfunction of the Waste Gas Disposal System will have on the following: ARM and PRM systems |
| Importance Rating: | 3.2 3.2 |
| Technical Reference: | D175045, Unit 1 HVAC - P&ID SFP Vent Sys, Sheet 1, Ver 22.0<br>D175042, Unit1 Waste Processing System, Sheet 6, Ver 33.0 |
| References provided: | None |
| Learning Objective: | DEFINE AND EVALUATE the operational implications of normal / abnormal plant or equipment conditions associated with the safe operation of the Radiation Monitoring System components and equipment, to include the following (OPS-40305A07):<br>[...]<br>• Automatic actuation<br>• Protective isolations<br>• Protective interlocks<br>• Actions needed to mitigate the consequence of the abnormality |
| Question History: | NEW |
| K/A match: | Requires the applicant to **know the effect on R-22 (PRMS) when WGDT #7 relieves to the vent stack (malfunction of the WG system resulting in relief lifting).** |
| SRO justification: | N/A |

51. 073A2.02 051

Unit 1 is operating at 100% when the following condition occurs:

- R-19, SGBD SAMPLE, fails HIGH.

Which one of the following completes the statements below?

_(1)_ valves will automatically close.

Per SOP-45.0, Radiation Monitoring System, the actions required to allow the Shift Chemist to obtain a sample of the SGs is to _(2)_ .

A. 1) HV-3328, HV-3329 AND HV-3330, STEAM GEN 1A/1B/1C SAMPLE ISO,

2) pull the INSTRUMENT power fuses for R-19

B. ✔ 1) HV-3328, HV-3329 AND HV-3330, STEAM GEN 1A/1B/1C SAMPLE ISO,

2) place R-19 Operations Selector Switch to the RESET position

C. 1) HV-3179A, 3180A, AND 3181A, STEAM GEN 1A/1B/1C LOWER BLOWDOWN,

2) pull the INSTRUMENT power fuses for R-19

D. 1) HV-3179A, 3180A, AND 3181A, STEAM GEN 1A/1B/1C LOWER BLOWDOWN,

2) place R-19 Operations Selector Switch to the RESET position

**ARP-1.6, FH1** - R-19 isolates HV-3328, 3329 and 3330.

**SOP-45**
4.4 Obtaining a Steam Generator Sample with R-19 in Alarm or Inoperable:

4.4.1 Notify Health Physics and Chemistry that R-19 will be inoperable during the time required to obtain a sample

**4.4.2 IF in alarm, THEN place the switch for R-19 to the Reset position.**

**4.4.3 Open** the Steam Generator Blowdown sample valves listed below as necessary to obtain a Steam Generator sample:
Q1P15HV3328 1A Steam Generator Blowdown sample valve
Q1P15HV3329 1B Steam Generator Blowdown sample valve
Q1P15HV3330 1C Steam Generator Blowdown sample valve

**Distracter analysis**

A. Incorrect. First part is correct (See B.1).

Second part is incorrect (See B.2). Plausible since this is the procedure directed action for a monitor in saturation, but not to allow the chemist to sample the SG.

B. Correct. First part is correct. R-19 failing in the "High Radiation" condition shuts HV-3328, 3329, and 3330.

Second part is correct. Per SOP-45, the Rad monitor switch must be taken to reset to allow SGBD sample valves to be opened.

C. Incorrect. First part is incorrect (See B.1). Plausible if the applicant doesn't recall that R-19 will isolate HV-3328, 3329, and 3330. They may believe that R-19 closes HV-3179A, 3180A, and 3181A which are immediately upstream of the correct valves and closed by the AFW pump start signal and on High Penetration Room DIFFERENTIAL Pressure.

Second part is incorrect (See A.2).

D. Incorrect. First part is incorrect (See C.1).

Second part is correct (See B.2).

NOUN NAME for HV-3179A, 3180A, AND 3181A, 1A/1B/1C SG LOWER BLOWDOWN SAMPLE ISO came from ARP BK1.

| | |
|---|---|
| K/A: **073A2.02** | Process Radiation Monitoring (PRM) System - Ability to (a) predict the impacts of the following malfunctions or operations on the PRM system; and (b) based on those predictions, use procedures to correct, control, or mitigate the consequences of those malfunctions or operations: Detector failure |
| Importance Rating: | 2.7 3.2 |
| Technical Reference: | FNP-1-ARP-1.6, FH1, RMS HI RAD, Ver 70<br>FNP-1-SOP-45, Radiation Monitoring System, Ver 46.2 |
| References provided: | None |
| Learning Objective: | DEFINE AND EVALUATE the operational implications of normal / abnormal plant or equipment conditions associated with the safe operation of the Radiation Monitoring System components and equipment, to include the following (OPS-40305A07):<br>[...]<br>• Automatic actuation<br>• Protective isolations<br>• Protective interlocks<br>• Actions needed to mitigate the consequence of the abnormality |
| Question History: | MOD FNP 07 |
| K/A match: | The applicant is required to know the **impact on the SG sample system due to R-19 failing high (Desktop simulator shows a level amp failure - high will alarm R-19)** and that SOP-45 provides **procedural guidance to sample the SGs under this condition.** |
| SRO justification: | N/A |

52. 073G2.2.42 052

Unit 1 is operating at 100% power.

Which one of the following meets the **MINIMUM** reactor coolant leakage detection system(s) that must be in operation and OPERABLE to prevent entering a REQUIRED ACTION STATEMENT of Tech Spec 3.4.15, RCS Leakage Detection Instrumentation?

- R-11 - CTMT PARTICULATE
- R-12 - CTMT GAS
- Containment Air Cooler Condensate Level Monitoring System (CACCLMS)

A. R-11 ONLY

B. ✔ R-11 AND R-12

C. The CACCLMS ONLY

D. R-12 AND the CACCLMS

**Technical Specifications:**
3.4 REACTOR COOLANT SYSTEM (RCS)

3.4.15 RCS Leakage Detection Instrumentation

LCO 3.4.15 The following RCS leakage detection instrumentation shall be OPERABLE:

a. One containment atmosphere particulate radioactivity monitor; and

b. One containment air cooler condensate level monitor or one containment atmosphere gaseous radioactivity monitor.

APPLICABILITY: MODES 1, 2, 3, and 4.

**SOP-45**
R-11 is the containment atmosphere particulate radioactivity monitor and
R-12 is the containment atmosphere gaseous radioactivity monitor.

**<u>Distracter analysis</u>**

| | |
|---|---|
| A. Incorrect. | See B. Plausible if the applicant recalls that RE-67 grab samples are required by this tech spec when R-12 and the CACCLMS are OOS but does NOT to prevent entry into a Required Action Statement (RAS). The applicant may believe that RE-67 is an acceptable substitute for R-12 to prevent LCO entry. |
| B. Correct. | Per TS - 3.4.15 this is the correct combination. |
| C. Incorrect. | See B. Plausible if the applicant thought that grab samples from RE-67 could provide the R-11 function. Grab samples are part of this Tech Spec. |
| D. Incorrect. | See B. Plausible if the applicant confused R-12 with R-11. This is a common misconception. |

| | |
|---|---|
| K/A: **073G2.2.42** | Process Radiation Monitoring (PRM) System - Ability to recognize system parameters that are entry-level conditions for Technical Specifications. |
| Importance Rating: | 3.9 4.6 |
| Technical Reference: | Technical Specifications, Ver 190.<br>FNP-1-SOP-45, Radiation Monitoring System, Ver 46.2 |
| References provided: | None |
| Learning Objective: | Given a set of Plant Conditions ASSESS those conditions and DETERMINE the ability of plant equipment and structures to meet their intended, designated function (OPS-52302A06) |
| Question History: | FNP 05 |
| K/A match: | Requires the applicant to know **which RCS leakage detection systems (Process Radiation Monitors) that are required to meet Technical Specifications.** |
| SRO justification: | N/A |

53. 076AA1.04 053

Unit 1 has been operating at 100% power and the Gross Failed Fuel Detector (GFFD) has been steady at 2000 cpm during the entire fuel cycle.

**At 1000:**

- FG5, GFFD SYS TRBL, has just come into alarm.

**At 1015:**

- A Reactor Trip and Safety Injection occurs.

Which one of the following completes the statements below?

The **minimum** GFFD reading that would cause FG5 to come into alarm is _(1)_ above background.

**At 1020**, flow through the GFFD _(2)_ be isolated.

| | (1) | (2) |
|---|---|---|
| A. | $1 \times 10^4$ cpm | will NOT |
| B.✔ | $1 \times 10^4$ cpm | WILL |
| C. | $1 \times 10^5$ cpm | will NOT |
| D. | $1 \times 10^5$ cpm | WILL |

**FG5 setpoint 1 x $10^4$ cpm ABOVE background.**

**D175009- Sheet 1 -** SV-3333 and SV-3765 close on a T signal (Phase A) which will actuate on a Safety Injection.

**<u>Distracter analysis</u>**

A. Incorrect. First part is correct (See B.1)

Second part is incorrect (See B.2). Plausible since the RHR to GFFD detector valves do not close on a T signal. In Mode 1, the GFFD will be lined up the RCS not RHR.

B. Correct. First part is correct. 1 X $10^4$ cpm > background will cause the alarm.

Second part is correct. On a safety injection, a Phase A is generated isolating the GFFD from the RCS. In Mode 1, the GFFD is aligned to the RCS.

C. Incorrect. First part is incorrect (See B.1). Plausible since this is the setpoint in AOP-32 to reduce power by 25%. The applicant could confuse the two numbers.

Second part is incorrect (See A.2).

D. Incorrect. First part is incorrect (See C.1).

Second part is correct (See B.2).

| | |
|---|---|
| K/A: **076AA1.04** | High Reactor Coolant Activity - Ability to operate and / or monitor the following as they apply to the High Reactor Coolant Activity: Failed fuel-monitoring equipment. |
| Importance Rating: | 3.2 3.4 |
| Technical Reference: | FNP-1-ARP-1.6, FG5 GFFD SYS TRBL, Ver 70<br>D175009, SH 1, Sampling System, Ver 32 |
| References provided: | None |
| Learning Objective: | RELATE AND IDENTIFY the operational characteristics including design features, capacities and protective interlocks for the components associated with the Gross Failed Fuel Detector, to include the components found on Figure 2, GFFD Failed Fuel Detector System, and Figure 3, Sampling Assembly Flow Diagram (OPS-52106E02). |
| Question History: | FNP 08 |
| K/A match: | Requires the applicant to be able to **monitor the failed fuel monitoring equipment and determine the minimum level at which the GFFD system trouble alarm actuates which directs the operators to AOP-32, Reactor Coolant High Activity.** |
| SRO justification: | N/A |

54. 076K2.08 054

Unit 1 is stable in Mode 3 following a Reactor Trip when the following conditions occur:

- Power has been lost to 4160V AC buses G, J, and L.

Which one of the following lists the valves that the OATC can close from the MCB to isolate a Service Water rupture in the Turbine Building?

Q1P16V514, SW TO TURB BLDG ISO B TRN
Q1P16V515, SW TO TURB BLDG ISO A TRN
Q1P16V516, SW TO TURB BLDG ISO A TRN
Q1P16V517, SW TO TURB BLDG ISO B TRN

A. MOVs 514 and 517

B. MOVs 514 and 516

C. ✔ MOVs 515 and 517

D. MOVs 515 and 516

**Electrically:**
1N MCC (A Train) - V515 and V517
**1T MCC (B Train) - V514 and V516**

**Mechanically:**
A Train - V515 and V516
B Train - V514 and V517

**Distracter analysis**

A. Incorrect. See B. Plausible since the 4 SW to Turbine Building Isolation valves are powered from and mechanically aligned to different trains and the applicant could easily confuse which valve is powered by which train and which valve is in which mechanical train.

B. Incorrect. See A.

C. Correct. Both of these valves are powered from A train power and in opposite trains mechanically (See Above).

D. Incorrect. See A.

| | |
|---|---|
| K/A: **076K2.08** | Service Water System (SWS) - Knowledge of bus power supplies to the following: ESF-actuated MOVs |
| Importance Rating: | 3.1* 3.1* |
| Technical Reference: | A506250, Unit 1 Electrical Load List, Ver 74.0<br>D-170119, SH 2, Service Water, Ver 47 |
| References provided: | None |
| Learning Objective: | NAME AND IDENTIFY the Bus power supplies, for those electrical components associated with the Service Water System, to include those items in Table 7- Power Supplies (OPS-40101B04). |
| Question History: | FNP 08 |
| K/A match: | Applicant is required to **know the bus power supplies to Service Water ESF actuated MOVs.** |
| SRO justification: | N/A |

55. 076K4.03 055

Unit 1 is operating at 100% power with the following conditions:

- 1A Containment Cooler is isolated per SOP-12.1, Containment Air Cooling System.
- The following valves are closed with power available:
  - MOV-3019A, SW TO 1A CTMT CLR AND CTMT FPS
  - MOV-3441A, SW FROM 1A CTMT CLR
  - MOV-3024A, EMERG SW FROM 1A CTMT CLR
- MOV-3023A, 1A CTMT CLR SW DISCH, is OPEN.

Subsequently, a steam break occurs and containment pressure rises to 5 psig.

Which one of the following completes the statement below?

1A Containment Cooler service water flow will be _____.

A. 0 gpm

B. approximately 600 gpm

C. approximately 800 gpm

D. ✔ approximately 2000 gpm

**FSD-A-181013:**Post-accident, the containment coolers provide for long-term containment heat removal. **Following a safety injection signal** and depending upon the availability of offsite power, the containment coolers are restarted on low speed (A loss of off site power (LOSP) would result in one fan from each train being started). Each cooler is nominally operated at a low speed generating 40,000 cfm with a service water **flow rate of approximately 2000 gpm**. During post-accident operation, each cooler provides approximately 80 x 106 Btu/hr of cooling capacity

**Distracter analysis**

A. Incorrect. See D. Plausible since the applicant may know that an MOV in the service water supply/return to each cooler will not open on an SI (MOV-3023A) and improperly think that it is MOV-3441A and therefore there would be no flow.

B. Incorrect. See D. Plausible since this is the minimum design flow per tech spec bases. The applicant may not be able to recall the proper SW flow.

C. Incorrect. See D. Plausible since this is the normal flow through the 1A containment cooler. The applicant may not be able to recall the proper SW flow

D. Correct. This is the post accident flow through the 1A containment cooler.

| | |
|---|---|
| K/A: **076K4.03** | Service Water System (SWS) - Knowledge of SWS design feature(s) and/or interlock(s) which provide for the following: **Automatic opening** features associated with **SWS isolation valves** to CCW heat exchangers |
| Importance Rating: | 2.9* 3.4* |
| Technical Reference: | FSD-A181013, Containment Ventilation System, Ver 14 |
| References provided: | None |
| Learning Objective: | DEFINE AND EVALUATE the operational implications of normal / abnormal plant or equipment conditions associated with the safe operation of the Service Water System components and equipment, to include the following (OPS-40101B07):<br>[...]<br>Automatic actuation including setpoint (example SI, Phase A, LOSP) |
| Question History: | FNP 07 |
| K/A match: | Requires the applicant to know the **Containment Cooler Isolation valves open by design on a safety injection and what the resultant SW flow to the coolers for accident conditions will be.** 10/24/12 - Per discussion with Chief Examiner, using SWS Turbine Building Isolation closure was acceptable due to FNP plant design. **Since the SW to TB MOVs were being addressed in a different KA and since this was an auto opening,** Service Water to the Containment Coolers have automatic opening features and more closely fit the K/A based on FNP design. |
| SRO justification: | N/A |

56. 077AK3.02 056

Unit 1 is at 100% power with the following conditions:

- 1B DG is running for STP-80.1, Diesel Generator 1B Operability Test.
- The 1B DG is currently loaded to 1 MW.
- DG01, 1B S/U XFMR TO 1G 4160 V BUS, breaker is CLOSED.

Subsequently, the following occurs:

- WE2, 1F, 4KV BUS OV-OR-UV OR LOSS OF DC, and VE2, 1G, 4KV BUS OV-OR-UV OR LOSS OF DC, come into alarm.
- 1F and 1G 4160V bus voltages are reading 3825 volts.
- The crew has entered AOP-5.2, Degraded Grid.

Per AOP-5.2, which one of the following completes the statements below?

The 1B DG _(1)_.

The reason for the above action is _(2)_.

A.✔ 1) is required to be secured and aligned for AUTO START

2) because this places the 1B DG is in the most reliable condition

B. 1) is required to be secured and aligned for AUTO START

2) because the LOSP Sequencer will not run LOSP loads if DG01 opens with 1B DG output breaker aligned to 1G 4160V bus

C. 1) load is required to be raised to FULL LOAD and DG01 opened

2) to ensure adequate voltage for safety related equipment

D. 1) load is required to be raised to FULL LOAD and DG01 opened

2) to prevent extended low load operation which would result in the buildup of combustion products in the engine exhausts

**Not a true 2+2 question for improved plausibility.**

**AOP-5.2:**

CAUTION: Diesel generators are in the most reliable condition when secured and aligned for auto start. The intent of step 4 is to secure any diesel generators which are running and not required.

**4 Verify All Emergency Diesel Generators -**
**ALIGNED FOR AUTO START using:**
FNP-0-SOP-38.0, DIESEL
GENERATORS

**<u>Distracter analysis</u>**

A. Correct. First part is correct. Step 4 of AOP-5.2 requires any DG not required to be running to be secured and aligned for auto start.

Second part is correct. Diesel generators are in the most reliable condition when secured and aligned for auto start.

B. Incorrect. First part is correct (See A.1).

Second part is incorrect (See A.2). Plausible because this used to be correct until recently a design change was implemented to install a Test Trip Override Switch. This modification causes the DG output breaker to trip open during testing if the normal supply breaker to 1G 4160V bus opens. Once the DG output breaker trips open, the LOSP Sequencer will function properly to re-close the DG output breaker and sequence on LOSP loads. This modification makes this reason incorrect.

C. Incorrect. First part is incorrect (See A.1). Plausible if the applicant thought that since the grid is degraded, operation of the DG is required to continuously maintain power to the ESF busses.

Second part is incorrect (See A.2). Plausible since it would be a high priority to maintain adequate voltage to safety related equipment in order to prevent damage to the equipment due to high current.

D. Incorrect. First part is incorrect (See C.1).

Second part is incorrect (See A.2). Plausible because the normal operation procedure (FNP-0-SOP-38.0, 2.2.8 ) has a precaution that the DGs should be loaded to full load for at least 1 hour each time they are started to reduce the possibility of an exhaust fire. However, under these conditions, the DGs are required to be secured and aligned for auto start.

| | |
|---|---|
| K/A: **077AK3.02** | Generator Voltage and Electric Grid Disturbances - Knowledge of the **reasons** for the following responses as they apply to Generator Voltage and Electric Grid Disturbances: **Actions contained in abnormal operating procedure for voltage and grid disturbances.** |
| Importance Rating: | 3.6 3.9 |
| Technical Reference: | FNP-1-AOP-5.2, Degraded Grid, Ver 15 |
| References provided: | None |
| Learning Objective: | EVALUATE plant conditions and DETERMINE if any system components need to be operated while performing [...] and AOP-5.2, Degraded Grid. (OPS-52521N06) |
| Question History: | VNP 10 |
| K/A match: | Applicant is required to know the **actions contained in AOP-5.2 during a grid disturbance** for DGs that are running and the reason for that action**.** |
| SRO justification: | N/A |

57. 078K1.01 057

The following conditions exist on Unit 1:

- A rupture in the Instrument Air system has occurred.
- Instrument Air header pressure is 65 psig and lowering slowly.

Which one of the following completes the statements below?

V-902, AIR DRYER AUTO BYP, will be _(1)_ .

V-904, NON-ESSENTIAL IA HDR AUTO ISO, will be _(2)_ .

| | (1) | (2) |
|---|---|---|
| A.✔ | OPEN | OPEN |
| B. | OPEN | CLOSED |
| C. | CLOSED | OPEN |
| D. | CLOSED | CLOSED |

KD2

AUTOMATIC ACTION

3. Pressure downstream of inst air dryers, bypasses dryers (V902) at 70 psig.
4. Pressure downstream of inst air dryers, isolates inst air to service bldg (V904) at 55 psig.

**Distracter analysis**

A. Correct. First part is correct. V-902 opens at 70 psig.

Second part is correct. V-904 closes at 55 psig.

B. Incorrect First part is correct (See A.1).

Second part is incorrect (See A.2). Plausible since there are numerous setpoints for alarms and automatic valve repositionings in the air system and they are easily confused.

C. Incorrect. First part is incorrect (See A.1). Plausible since there are numerous setpoints for alarms and automatic valve repositionings in the air system and they are easily confused.

Second part is correct (See A.2)

D. Incorrect. First part is incorrect (See C.1).

Second part is incorrect (See B.2).

| | |
|---|---|
| K/A: **078K1.01** | Instrument Air System - Knowledge of the physical connections and/or cause-effect relationships between the IAS and the following systems: Sensor air |
| Importance Rating: | 2.8* 2.7* |
| Technical Reference: | FNP-1-ARP-1.10, KD2, IA PRESS LO Ver 70.2 |
| References provided: | None |
| Learning Objective: | DEFINE AND EVALUATE the operational implications of normal / abnormal plant or equipment conditions associated with the safe operation of the Compressed Air System components and equipment, to include the following (OPS-40204D07):<br><br>[...]<br>Automatic actuation including setpoints for selective isolation on decreasing header pressure.<br>[...] |
| Question History: | FNP 04 |
| K/A match: | Requires the applicant to **know the cause and effect relationship between the sensed air header pressure and the automatic operation of isolation valve V-904 and bypass valve 902.** |
| SRO justification: | N/A |

58. 079G2.4.34 058

The following plant conditions exist on Unit 1:

- The Reactor has been tripped due to loss of Instrument Air.
- The operating crew is performing the actions of ESP-0.1, Reactor Trip Response.
- SG Atmospheric Relief Valves (ARVs) are aligned per SOP-62.0, Emergency Air System.

Subsequently, the operator applies 18 psig to the valve actuator for PCV-3371A, 1A MS ATMOS REL VLV.

Which one of the following completes the statements below?

PCV-3371A _(1)_ open.

If PCV-3371A were fully open, _(2)_.

A. 1) IS

2) a High Steam Flow - Lo Lo Tavg Main Steam Isolation may occur

B. 1) IS

2) Technical Specification cooldown limits may be exceeded

C. 1) is NOT

2) a High Steam Flow - Lo Lo Tavg Main Steam Isolation may occur

D.✔ 1) is NOT

2) Technical Specification cooldown limits may be exceeded

**This question is not a true 2 + 2 to improve plausibility of distracters.**

**SOP-62.0**
Caution after step 4:
Atmospheric relief valves will start to open at 24 ± 2 psig and will be full open at 45 psig. IF the atmospheric relief is full open, THEN Tech Spec cooldown limits may be exceeded.

**Distracter analysis**

A. Incorrect. First part is incorrect (See D.1). Plausible if the applicant is not familiar with the actuation pressure of the ARV's.

Second part is incorrect (See D.2). Plausible since a caution exists in numerous procedures that excessive opening of the **STEAM DUMPS** will cause this isolation of the MSIV's. Hi Steam Flow Lo Lo Tavg is 1 of 2 flow instruments on 2 of 3 steam lines.

This isolation closes the MSIV's and not the ARV's. The applicant could think that this isolation in fact does close the ARV's to prevent exceeding a technical specification cooldown.

B. Incorrect. First part is incorrect (See A.1).

Second part is correct (See D.2).

C. Incorrect. First part is correct (See D.1).

Second part is incorrect (See A.2).

D. Correct. First part is correct. The ARV will not open until at least 22 psig of air is applied.

Second part is correct. Per the caution of SOP-62, a fully open ARV may cause tech spec limits to be exceeded.

| | |
|---|---|
| K/A: **079G2.4.34** | Station Air System - Knowledge of RO tasks performed outside the main control room during an emergency and the resultant operational effects. |
| Importance Rating: | 4.2 4.1 |
| Technical Reference: | FNP-1-SOP-62.0, Emergency Air System, Ver 23 |
| References provided: | None |
| Learning Objective: | DEFINE AND EVALUATE the operational implications of normal / abnormal plant or equipment conditions associated with the safe operation of the Main and Reheat Steam System components and equipment, to include the following (OPS-40201A07):<br>[…]<br>• Abnormal and Emergency Control Methods<br>• Automatic actuation including setpoint (example SI, Phase A, Phase B, MSLIAS, LOSP, SG level)<br>• Protective isolations such as high flow, low pressure, low level including setpoint<br>[…] |
| Question History: | MOD FNP 05 |
| K/A match: | Requires the applicant to know the **operational effects of local operator actions** to control the SG ARV's. The operator must use the Emergency Air system locally to control ARV position due to the loss of the Station Air system. |
| SRO justification: | N/A |

59. 103K4.06 059

Unit 1 has experienced a large break LOCA and the following conditions exist:

- PT-953, CTMT PRESS has reached the PHASE B setpoint.

Which one of the following completes the statement below?

A MINIMUM of _(1)_ OR _(2)_ PHASE B CTMT ISO CS ACTUATION handswitch(es) is(are) required to actuate a Phase B isolation.

A. 1) 1 additional Containment pressure channel reaching 16.2 psig

2) TWO

B. 1) 2 additional Containment pressure channels reaching 16.2 psig

2) ONE

C. ✓ 1) 1 additional Containment pressure channel reaching 27 psig

2) TWO

D. 1) 2 additional Containment pressure channels reaching 27 psig

2) ONE

**Not a true 2 + 2 for plausibility.**

**FSD-A181007 2.7.1**
Phase B isolation is initiated by containment pressure High-3 (27 psig) on 2 of 4 b/s or by manual actuation ( using 2/4 Containment Phase B Isolation/Containment Spray Actuation handswitches).

**<u>Distracter analysis</u>**

A. Incorrect. First part is incorrect (See C.1). Plausible since this is the correct number of channels but the wrong setpoint. 16.2 psig is HI-2 main steam line isolation and NOT HI-3 Phase B isolation.

Second part is correct (SeeC.2).

B. Incorrect. First part is incorrect (See C.1). Plausible since there are 4 bistables and the applicant could reason that 3 of 4 are required to actuate Phase B. Additionally, the setpoint is incorrect as discussed in A.1.

Second part is incorrect (See C.2). Plausible since Phase A and SI only require 1 handswitch to actuate. The applicant may confuse them.

C. Correct. First part is correct. Per the FSD, High-3 Containment Isolation Phase B coincidence is 2 of 4 bistables.

Second part is correct. Per the FSD, 2 handswitches are required to actuate Phase B Containment Isolation.

D. Incorrect. First part is incorrect (See C.1). Plausible since there are 4 bistables and the applicant could reason that 3 of 4 are required to actuate Phase B. Permissives such as P-8 and P-9 require 2 of 4 to enable and 3 of 4 to disable. There are many coincidences in the reactor protection system and they are easily confused.

Second part incorrect (See B.2)

| | |
|---|---|
| K/A: **103K4.06** | Containment System - Knowledge of containment system design feature(s) and/or interlock(s) which provide for the following: Containment isolation system |
| Importance Rating: | 3.1 3.7 |
| Technical Reference: | FSD-A181007, Reactor Protection System, Ver 18 |
| References provided: | NONE |
| Learning Objective: | SELECT AND ASSESS the following instrument/equipment response expected when performing Containment Structure and Isolation System evolutions including the fail condition, alarms, and trip setpoints (OPS-52102A05):<br><br>• PT-950, PT-953 |
| Question History: | VOGTLE 02 - Changed to containment phase B isolation to meet K/A vs ctmt spray actuation. |
| K/A match: | Requires the applicant to have **knowledge of the design feature of the Phase B Containment Isolation System** in that 2 of 4 bistables or 2 of 2 handswitches are required for actuation. |
| SRO justification: | N/A |

60. G2.1.18 060

The electronic log is malfunctioning. The control room has shifted to manual logs and the following entries have been made:

1000 Q1E21V061A, HHSI to 1C RCS loop CL iso, as left position; 1.5 turns OPEN.
1012 Started 1B CCW Pump.

**At 1030:**

- The OATC recognizes that an error was made on the 1000 log entry.
- Q1E21V061A should have been logged as throttled to 1.25 turns OPEN.

Per SOP-0.11, Watch Station Tours and Operator Logs, the OATC is required to correct the 1000 log entry by which one of the following methods?

A. • Circle the incorrect entry in red.

• Enter the correct information next to the incorrect information and record the date and initial.

B. • Circle the incorrect entry in red.

• At 1030 make a log entry with the correct information and designate it as a LATE ENTRY.

C. ✓ • Draw a single line through the incorrect entry.

• Enter the correct information next to the incorrect information and record the date and initial.

D. • Draw a single line through the incorrect entry.

• At 1030 make a log entry with the correct information and designate it as a LATE ENTRY.

**SOP- 0.11 Pg 13**
IF an error is made when recording hand written entries, THEN a single line will be drawn through the incorrect entries AND the correct entries recorded. The person making the correction must initial AND date the change.

**Distracter analysis**

A. Incorrect. First part is incorrect (See C.1). Plausible because NMP-OS)007-001, Conduct of Operations Standards and Expectations, Step 6.13.2.3 requires out of specification reading in manual logs to be circled. The applicant could confuse these requirements.

Second part is correct (See C.2).

B. Incorrect. First part is incorrect (See A.1).

Second part is incorrect (See C.2). Plausible since the correct data would be placed in the log. The SOP-0.11 uses a LATE ENTRY to add additional information to the log and NOT to correct errors.

C. Correct. First Part is correct. IF an error is made when recording hand written entries, THEN a single line will be drawn through the incorrect entries AND the correct entries recorded. The person making the correction must initial AND date the change.

Second part is correct. The person making the correction must initial AND date the change.

D. Incorrect. First Part is correct (See C.1).

Second part is incorrect (See B.2).

| | |
|---|---|
| K/A: **G2.1.18** | Ability to make accurate, clear, and concise logs, records, status boards, and reports. |
| Importance Rating: | 3.6 3.8 |
| Technical Reference: | FNP-0-SOP-0.11, Watch Station Tours and Operator Logs, Ver 26.4<br>NMP-OS-007-001, Conduct of Operations Standards and Expectations, Ver 13 |
| References provided: | None |
| Learning Objective: | Identify the required entries into the Plant Operator's Logbook and the position with overall responsibility for maintenance of the Reactor Operator's Logbook. (OPS52303O01) |
| Question History: | NEW |
| K/A match: | Applicant is required to have the **ability to correct log errors to ensure the operator logs are accurate, clear, and concise.** |
| SRO justification: | N/A |

61. G2.1.5 061

Both Units are operating at 100% power with the following conditions:

- A non-licensed Fire Protection Administrator who is qualified as a Shift Communicator is on shift.

Which one of the following completes the statements below?

Per EIP-0.0, Emergency Organization, a **minimum** of _(1)_ licensed Plant Operators is required to staff the shift.

The **maximum** number of hours that a Plant Operator may work in any 24 hour period is _(2)_ per NMP-AD-016-003, Scheduling and Calculating Work Hours.

| | (1) | (2) |
|---|---|---|
| A. | 3 | 12 |
| B.✔ | 3 | 16 |
| C. | 4 | 12 |
| D. | 4 | 16 |

**EIP-0.0 Table 1 requires:**
1 OATC per Unit - Total of 2
1 UO Shared - Total of 1
Shift Communicator (Least affected UO) - 1

**NMP-AD016-003**
6.1.1 The following work hour **ceiling** limits apply to covered individuals regardless of unit status:
• No more than 16 work hours in any 24-hour period
• No more than 26 work hours in any 48-hour period
• No more than 72 work hours in any 7-day/168-hour period

**<u>Distracter analysis</u>**

A. Incorrect. First part is correct (See B.2).

Second part is incorrect (See B.2). Plausible since this is the normal number of hours work and the applicant could not be able to recall the correct limit.

B. Correct. First part is correct. Per EIP-0.0, 3 Licensed operators are required to man the shift since a shift communicator is also on shift.

Second part is correct. The following work hour **ceiling** limits apply to covered individuals regardless of unit status:
• No more than 16 work hours in any 24-hour period

C. Incorrect. First part is incorrect (See B.2). Plausible since without a non-licensed shift communicator, this would be a correct answer.

Second part is incorrect (See A.2).

D. Incorrect. First part is incorrect (See C.2).

Second part is correct (See B.2).

| | |
|---|---|
| K/A: **G2.1.5** | Ability to use procedures related to shift staffing, such as minimum crew complement, overtime limitations, etc. |
| Importance Rating: | 2.9* 3.9 |
| Technical Reference: | FNP-0-EIP-0.0, Emergency Organization, Ver 29<br>NMP-AD-016-003, Scheduling and Calculating Work Hours, Ver 5 |
| References provided: | None |
| Learning Objective: | Given the plant mode for each unit, STATE AND EXPLAIN the minimum manning requirements for manning one or both units (OPS40502H04). |
| Question History: | NEW |
| K/A match: | Requires the applicant to have the **ability to determine minimum crew manning as well as maximum hours that the operator may work.** Since this question asks for the reactor operator position it is deemed to be an RO question and since an RO objective exists for this knowledge requirement. |
| SRO justification: | N/A |

62. G2.2.20 062

Unit 1 is operating at 100% power when the following occurs:

- STP-4.1, 1A Charging Pump Quarterly Inservice Test, is in progress.
- 1A Charging pump failed to start when the handswitch was taken to START.

Which one of the following are the required actions per SOP-0.0, General Instructions to Operations Personnel?

A. Obtain Shift Manager's permission, THEN take the handswitch to START a second time.

B. Take the handswitch to START a second time, THEN write a Condition Report to document the action.

C. ✔ Write a condition report documenting the event and contact Maintenance.

D. The System Operator will rackout and perform a visual inspection of the circuit breaker and write a condition report.

**SOP-0.0**

15.1.3. For handswitches on the MCB, EPB, BOP, and HSDP, if the associated component fails to actuate (pump—start, valve—move in open or closed direction, et cetera) when operating a handswitch, a second actuation may NOT be attempted until the cause can be thoroughly investigated.

15.2.4 IF a breaker has malfunctioned (i.e., failed to close, open, trip, or charge when expected) contact appropriate Maintenance personnel for involvement in troubleshooting prior to attempting restoration efforts. [...]

**<u>Distracter analysis</u>**

| | |
|---|---|
| A. Incorrect. | See C. Plausible since this is correct when backing up ESF equipment actuation on the third, fourth attempt etc per step 15.1.5of SOP-0.0. |
| B. Incorrect. | See C. Plausible since this is correct when backing up ESF equipment actuation per step 15.1.4 and 15.1.5 of SOP-0.0. |
| C. Correct. | A second attempt is not allowed under normal operating conditions. |
| D. Incorrect. | See C. Per SOP-0.0, Step 15.2.4, racking out a circuit breaker that has malfunctioned is NOT allowed. Plausible since all breaker malfunctions are investigated by the Systems Operators (without racking the breaker out) and the applicant could think that a visual inspection of a racked out breaker is appropriate before calling maintenance. |

| | |
|---|---|
| K/A: **G2.2.20** | Knowledge of the process for managing troubleshooting activities. |
| Importance Rating: | 2.6 3.8 |
| Technical Reference: | FNP-0-SOP-0.0, General Instructions to Operations Personnel, Ver 152.2 |
| References provided: | None |
| Learning Objective: | Using plant procedures, describe the work control process and associated program interfaces, including Toolpouch Work (for example, tagging, radiation protection, foreign material exclusion, fire protection, and industrial safety). (OPS-40502N09). |
| Question History: | NEW |
| K/A match: | The applicant is **required to know what actions are required to support troubleshooting activities for a circuit breaker that failed to close. The actions are the same regardless of if the applicant assumes the breaker failed to shut or the handswitch failed to actuate.** |
| SRO justification: | N/A |

63. G2.2.25 063

Per Tech Specs Bases 3.3.1, Reactor Trip System (RTS) Instrumentation, what is the basis of the Pressurizer Water Level - High Reactor trip?

A.✔ Protects the pressurizer safety valves against water relief.

B. Provides the primary protection for preventing RCS over pressurization.

C. Protects against loss of pressure control due to spray nozzle being submerged.

D. Provides protection against exceeding containment design pressure in the event of a LOCA.

3.3.1 Bases
9. Pressurizer Water Level - High:

The Pressurizer Water Level—High trip Function provides a backup signal for the Pressurizer Pressure—High trip and also **provides protection against water relief through the pressurizer safety and power-operated relief valves (PORV)**. These valves are designed to pass steam in order to achieve their design energy removal rate, but are also qualified for limited water relief following specific transients. A reactor trip (Pressurizer Pressure — High) is actuated prior to the pressurizer becoming water solid.

**Distracter analysis**

A. Correct. Per Tech Specs bases 3.3.1. the Pressurizer Pressure—High trip and also provides protection against water relief through the pressurizer safety and power-operated relief valves (PORV).

B. Incorrect. See B. Plausible because this is the bases for the High Pressure Reactor Trip. Przr High Level trip is the BACKUP for the High Pressure trip.

C. Incorrect. See B. Plausible if the applicant believes that the spray nozzle will be covered at 92% Pressurizer level. This is not correct.

D. Incorrect. See B. Plausible if the applicant assumes that the additional water in the RCS will cause a pressure rise that exceeds the containment design pressure.

.

| | |
|---|---|
| K/A: **G2.2.25** | Knowledge of the bases in Technical Specifications for limiting conditions for operations and safety limits. |
| Importance Rating: | 3.2 4.2 |
| Technical Reference: | Technical Specifications Bases, Ver 58<br>Core Operating Limit Report, Unit 1 Cycle 25, Ver 1 |
| References provided: | None |
| Learning Objective: | **RECALL AND APPLY** the LCO and APPLICABILITY for Technical Specifications (TS) or TRM requirements, and the REQUIRED ACTIONS for 1 HR or less TS or TRM requirements, and the relevant portions of BASES that <u>DEFINE</u> the OPERABILITY and APPLICABILITY of the LCO associated with the Reactor Protection System (RPS) , to include the following (OPS-52201I10):<br><br>3.3.1 Reactor Trip System (RTS) Instrumentation |
| Question History: | FNP EXAM BANK |
| K/A match: | Requires the applicant to know the **bases for Tech Spec 3.3.1, Reactor Trip System (RTS) Instrumentation - Pressurizer Water Level - High.** |
| SRO justification: | N/A |

64. G2.3.12 064

Unit 1 is in Mode 6 for a refueling outage.

- Two Plant Operators are required to enter a room that is posted as a **Locked High Radiation Area (LHRA)** to perform work.

Which one of the following completes the statements below?

The radiation level at which this posting is required is _(1)_.

The LHRA key is obtained from _(2)_.

A. 1) > 100 mrem/hr

2) Health Physics Supervision

B. 1) > 100 mrem/hr

2) the Shift Support Supervisor (SSS)

C✓ 1) > 1000 mrem/hr

2) Health Physics Supervision

D. 1) > 1000 mrem/hr

2) the Shift Support Supervisor (SSS)

**RCP-0**
5.2.5.1 A LHRA means an area, accessible to individuals, in which radiation levels from radiation sources external to the body could result in an individual receiving a dose equivalent in excess of 1 Rem/hr at 30 centimeters (11.81 inches or ~ 12 inches) from the radiation source or 30 centimeters from any surface that the radiation penetrates.

**RCP-0.1 APP A:**
**2.1 Maintain** Individual Locked High Radiation Area keys under the control of HP Supervision.

**<u>Distracter analysis</u>**

A. Incorrect. First part is incorrect (See C.1). Plausible because this is the limit for a high radiation area and the applicant could confuse the two limits.

Second part is correct (See C.2).

B. Incorrect. First part is incorrect (See A.1).

Second part is incorrect (See C.2). Plausible since a LHRA Master Key is locked within a key storage cabinet located in the Control Room. The key is available for issue by the OPS Shift Supervisor to support mitigation activities associated with an NMP-EP-110 Emergency.

Additionally, the SSS issues numerous keys to personnel during plant operation and the applicant could assume this is one of them.

C. Correct. First Part is correct. 1000 mrem/hr is a Locked HRA.

Second part is correct. Individual Locked High Radiation Area keys are maintained under the control of HP Supervision.

D. Incorrect. First part is correct (See C.1).

Second part is incorrect (See B.2). This would be a correct answer if a declared emergency were in progress and emergency actions were required. The Shift Supervisor could issue a key from the SSS office.

| | |
|---|---|
| K/A: **G2.3.12** | Knowledge of **radiological safety principles** pertaining to licensed operator duties, such as containment entry requirements, fuel handling responsibilities, access to locked high-radiation areas, aligning filters, etc. |
| Importance Rating: | 3.2 3.7 |
| Technical Reference: | FNP-0-RCP-0, General Guidance and Special Instructions to Health Physics Personne, Ver 68<br>FNP-0-RCP-0.1, Key Control Program and Health Physics Guidance for Control of High Radiation areas, Locked High Radiation Areas, and very High Radiation Areas, Ver 18 |
| References provided: | None |
| Learning Objective: | List four types of areas posted based on radiation levels and the radiation levels/distances that require them to be posted (OPS30401A22) |
| Question History: | MOD SUMMER 11 |
| K/A match: | Requires the applicant to **know the radiological safety principle (value at which the locked high radiation is posted) and the requirements to enter a locked high radiation area.** |
| SRO justification: | N/A |

65. G2.3.13 065

Which one of the following completes the statements below for entry into the Dry Cask Storage Radiation Controlled Area (RCA)?

Per AP-42, Access Control, the operator _(1)_ required to log in on the normal Auxiliary Building Access Control System (ACS) terminal prior to entering the Dry Cask Storage Area RCA.

Upon exiting from the Dry Cask RCA, the operator is required to perform a 2 minute frisk and also use the _(2)_.

A. 1) IS

2) Primary Access Point (PAP) exit portal monitors

B.✔ 1) IS

2) Auxiliary Building RCA exit portal monitors

C. 1) is NOT

2) Primary Access Point (PAP) exit portal monitors

D. 1) is NOT

2) Auxiliary Building RCA exit portal monitors

**AP-42 rev 49.2:**
**6.0 ENTRY INTO RCAS**

**6.2** Radiation workers authorized entry into any RCA will ensure they have on their person, personnel monitoring device(s) assigned to them by Health Physics (Dosimetry), that being their dosimetry badge, and a self-issued digital alarming dosimeter prior to entry into that RCA.

**6.3 Entry into any RCA requires a Radiation Work Permit and issued personnel dosimetry. Routine access to the main RCA will be through the hallway adjacent to the Health Physics Office.**

**6.3.4** Prior to entering any RCA, each individual is responsible for ensuring that they meet the requirements of the RWP under which they are entering.

**6.3.5 Prior to entry into any RCA each worker will either log in on ACS terminal or log in using an alternate method which will be determined by Health Physics (e.g., manually logging personnel into and out of the RCA).**

**6.3.6 Upon exit from the RCA each worker will log out at a ACS terminal except as noted below.**

**6.3.7** Personnel who are required to enter other RCA's **where no ACS terminal exist**

(e.g. outside RCA's, temporary RCA's in Turbine Building, etc.), **will either be required to use the normal Auxiliary Building ACS terminal** or if available, a terminal which is more convenient to the outside RCA. This may require individuals to transit back and forth while logged inside a RCA.

**6.3.8 Health Physics will implement an alternate method of control when the ACS is inoperable.**

**6.4 Entry into the LLRB and other RCAs outside the Protected Area**:

**6.4.1** Personnel with Vital Area access will log into the RCA per step 6.3.

**6.4.2 Upon completion of radiation work, personnel must either return to the HP Office, log out per step 6.3 and check out via the Auxiliary Building RCA exit portal monitor, leaving digital dosimeters at appropriate locations (e.g., at the RCA exit) and other personnel monitoring devices as directed in step 6.2 or they must log out and be monitored as directed by Health Physics.**

*** Per the sign on the Dry Cask Storage Area access, frisking is required upon exit from that RCA.**

**Distracter analysis**

A. Incorrect. First part is correct (See B.1).

Second part is incorrect (See B.2). Plausible if the applicant assumes they can use the Primary Access Point (PAP) portal monitors since everyone who leaves the protected area passes through them.

B. Correct First part is correct. Per step 6.3.5, the worker will use the Aux Building ACS terminal.

Second part is correct. Per step 6.4.2, personnel must log out of the RCA and use the Aux Bldg exit portal monitor.

C. Incorrect. First part is incorrect (See B.1). Plausible if the applicant believes that since they are not entering the Aux building RCA, the ACS terminal entry is not required.

Second part is incorrect (See A.2).

D. Incorrect. First part is incorrect (See C.1).

Second part is correct (See B.2).

| | |
|---|---|
| K/A: **2.3.13** | Knowledge of radiological **safety procedures** pertaining to licensed operator duties, such as response to radiation monitor alarms, containment entry requirements, fuel handling responsibilities, access to locked high-radiation areas, aligning filters, etc. |
| Importance Rating: | 3.4 3.8 |
| Technical Reference: | FNP-0-AP-42, Access Control, Ver 49.2 |
| References provided: | None |
| Learning Objective: | Outline the requirements and process for entry into an RCA (OPS40502M03). |
| Question History: | NEW |
| K/A match: | Requires the applicant to **know the radiological safety procedure requirements (in this case AP-42, access control) to enter and exit an out building classified as a radiation controlled area.** |
| SRO justification: | N/A |

66. G2.3.4 066

Which one of the following completes the statement below?

An employee who is a fully documented radiation worker and DOES NOT declare her pregnancy has an annual FNP Administrative TEDE limit of _____ .

A. 450 mRem

B. 500 mRem

C. ✔ 2000 mRem

D. 5000 mRem

**HP manual Step 4.1.3.3**
Any employee who discloses that she is or may be pregnant will complete the election form (DOS Form 931 in FNP-0-DOS-2) to accept or decline a prenatal radiation exposure limit of 500 mrem (0.5 rem) for the embryo or fetus for the term of the pregnancy as recommended in 10CFR20.1208.

**FNP Admin Annual Dose Guidelines -**
Fully documented radiation worker - 2000 mRem per year.

**Distracter analysis**

| | |
|---|---|
| A. Incorrect. | See C. Plausible since the is the Admin limit for the woman during the term of the pregnancy of a declared pregnant woman. |
| B. Incorrect. | See C. Plausible since this is the Federal Limit for the Embryo for the term of the pregnancy. |
| C. Correct. | Since the woman has not declared her pregnancy, her admin exposure limit is 2000 mRem. |
| D. Incorrect. | See C. Plausible because this is the federal annual limit for and undeclared pregnancy. |

| | |
|---|---|
| K/A: **G2.3.4** | Knowledge of radiation exposure limits under normal or emergency conditions. |
| Importance Rating: | 3.2 3.7 |
| Technical Reference: | FNP-0-M-001, SNC FNP Health Physics Manual, Ver 18 |
| References provided: | None |
| Learning Objective: | List FNP Admin Limits for various categories of dose (OPS30401A20). |
| Question History: | NEW |
| K/A match: | Requires the applicant to **know the normal exposure limits** for an un-declared pregnant woman. |
| SRO justification: | N/A |

67. G2.4.20 067

Unit 1 is performing the actions of EEP-3.0, Steam Generator Tube Rupture, due to a tube rupture in the 1B SG.

- The 1B SG Narrow range level is 36% and rising.

Which one of the following completes the statements below?

The 1B SG narrow range level _(1)_ adequate to begin the initial RCS cooldown. The operational implication of having sufficient level in the 1B SG prior to the cooldown is to _(2)_.

A. 1) is NOT

2) ensure a secondary side heat sink

B. 1) is NOT

2) prevent SG depressurization during the RCS cooldown

C. 1) IS

2) ensure a secondary side heat sink

D. ✔ 1) IS

2) prevent SG depressurization during the RCS cooldown

**EEP-3 Note prior to Step 4**
[CA] Maintaining ruptured SG(s) narrow range level greater than 31%{48%} prevents SG depressurization during RCS cooldown.

**FNP-0-EEB-3.0 version 2**
***ERG Step Text:*** *Check Ruptured SG(s) Level*
**Purpose:** 1. To reduce feed flow to the ruptured steam generators to minimize the potential for steam generator overfill.
2. **To establish and maintain a water level in the ruptured steam generators above the top of the U-tubes in order to promote thermal stratification to prevent ruptured steam generator depressurization.**
**Basis:**
It is also important to maintain the water level in the ruptured steam generator above the top of the U-tubes. When the primary system is cooled in subsequent steps, the steam generator tubes in the ruptured steam generator will approach the temperature of the reactor coolant, particularly if reactor coolant pumps continue to run. If the steam space in the ruptured steam generator expands to contact these colder tubes, condensation will occur which would decrease the ruptured steam generator pressure. As previously demonstrated (see Step 3), this would reduce the reactor coolant subcooling margin and/or increase primary-to secondary leakage, possibly delaying SI termination or causing SI reinitiation. Consequently, the water level must be maintained above the top of the tubes to insulate the steam space. **In addition to insulating the steam space, this ensures a secondary side heat sink in the event that no intact steam generator is available** and also provides protection against misdiagnosis of the ruptured steam generator due to an imbalance of feed flow.

**Distracter analysis**

A. Incorrect. First part in incorrect (See D.1). Plausible since the applicant may apply adverse numbers of 48% which would make this part correct.

Second part in incorrect (See D.2). Plausible since this is another reason for having sufficient level in the ruptured SG ONLY if there are NO intact SGs available. This is not the case in this question.

B. Incorrect. First part in incorrect (See A.1).

Second part is correct (See D.1).

C. Incorrect. First part in correct (See D.1).

Second part in incorrect (See A.2).

D. Correct. First part in correct. Ruptured SGWL must be > 31%.

Second part is correct. Prevents SG depressurization during RCS cooldown.

| | |
|---|---|
| K/A: **G2.4.20** | Knowledge of the operational implications of EOP warnings, cautions, and notes. |
| Importance Rating: | 3.8 4.3 |
| Technical Reference: | FNP-1-EEP-3, Steam Generator Tube Rupture, Ver 27<br>FNP-0-EEB-3.0, Specific Background Document for FNP-1/2 EEP-3, Ver 2 |
| References provided: | None |
| Learning Objective: | STATE AND EXPLAIN the basis for all Cautions, Notes, and Actions associated with EEP-3, Steam Generator Tube Rupture. (OPS-52530D03). |
| Question History: | MOD FNP EXAM BANK |
| K/A match: | Requires the applicant to **know the operational implications of not meeting the Note and Caution of EEP-3 by having the improper SG water level prior to RCS cooldown during a tube rupture event.** |
| SRO justification: | N/A |

68. G2.4.23 068

FRP-Z.1, Response to High Containment Pressure, has the following caution:

IF ECP-1.1, Loss of Emergency Coolant Recirculation, is in effect, THEN Containment Spray should be operated as directed in ECP-1.1.

Which one of the following describes the bases for giving priority to ECP-1.1?

ECP-1.1 directs the operation of the Containment Spray (CS) pumps to ensure _____.

A. ✔ RWST level is conserved

B. adequate NPSH for the RHR pumps is available

C. the maximum available Containment heat removal systems are running

D. automatic swapover of the CS pumps to the Containment sump is prevented

**FRP-Z.1 Caution prior to step 3**
IF FNP-1-ECP-1.1, LOSS OF EMERGENCY COOLANT RECIRCULATION, is in effect, THEN containment spray should be operated as directed in FNP-1-ECP-1.1.

**FRB-Z.1 Step 3 Basis**
Guideline ECA-1.1 uses a less restrictive criteria, which permits reduced spray pump operation depending on RWST level, containment pressure and number of emergency fan coolers operating. The less restrictive criteria for containment spray operation is used in guideline ECA-1.1 since recirculation flow to the RCS is not available and it is very important to **conserve RWST water**, if possible, by stopping containment spray pumps

**Distracter analysis**

A. Correct. Per above basis statement: The less restrictive criteria for containment spray operation is used in guideline ECA-1.1 since recirculation flow to the RCS is not available and it is very important to conserve RWST water, if possible, by stopping containment spray pumps

B. Incorrect. See A. Plausible since ECP-1.1 is Loss of Emergency Coolant Recirculation and the applicant may think that ECP-1.1 operates the spray pumps to maximize sump level to allow the RHR pumps to get a proper suction for alignment to sump recirculation.

C. Incorrect. See A. Plausible since this is the goal of FRP-Z.1 and the applicant could confuse the two procedures.

D. Incorrect. See A. Plausible since there is an auto swap over for RHR sump suction valves but not for Containment Spray pumps. The applicant could confuse these and think that ECP-1.1's mitigation addressed this issue.

| | |
|---|---|
| K/A: G2.4.23 | Knowledge of the bases for prioritizing emergency procedure implementation during emergency operations. |
| Importance Rating: | 3.4 4.4 |
| Technical Reference: | FNP-1-FRP-Z.1, Response to High Containment Pressure, Ver 15<br>FNP-0-FRB-Z.1, Specific Background Document for FNP-1/2-FRP-Z.1, Ver 1 |
| References provided: | None |
| Learning Objective: | STATE AND EXPLAIN the basis for all Cautions, Notes, and Actions associated with (1) FRP-Z.1, Response to High Containment Pressure; [...]. (OPS-52533M03) |
| Question History: | FNP 08 |
| K/A match: | Requires the applicant to **know the basis for operating the Containment Spray pumps per ECP-1.1 versus FRP-Z.1 (prioritizing emergency procedure implementation during emergency operations).** |
| SRO justification: | N/A |

69. G2.4.29 069

Unit 1 is operating at 100% power and the following conditions exist:

- #1 Waste Monitor Tank (WMT) release is in progress.
- The Unit 1 Rad Side SO is at the RCA exit preparing to enter the portal monitors.

Subsequently, the plant emergency alarms sounds and an announcement is made declaring a Site Area Emergency.

Which one of the following completes the statements below?

The Rad Side SO will go to the designated assembly area _(1)_.

The designated assembly area for the Rad Side SO is the _(2)_.

A. 1) after securing the #1 WMT release

2) Operations Support Center (OSC)

B. 1) after securing the #1 WMT release

2) Control Room

C. 1) immediately

2) Operations Support Center (OSC)

D.✔ 1) immediately

2) Control Room

**EIP-0.0**
4.4.5 System Operators (2), plant operations.
- Assigned assembly area is the Control Room.

4.4.6 Other System Operators (as required by Technical Specifications), plant operations.
- Assigned assembly area is the Control Room.

**EIP-10**
4.10 During outages and normal Monday through Friday day shifts, individuals NOT described in section 4.1 thru 4.8 above will report to their assembly area as follows:
[...]
OPS Group on shift or qualified for a Shift position, and NOT in Training - Control Room

**<u>Distracter analysis</u>**

A. Incorrect. First part is incorrect (See D.1). Plausible since this would stop a release to the environment. However, the release is monitored and will stop if R-18 alarms and the pump will trip on low level which would render the system safe.

Second part is incorrect (See D.2). Plausible since this is an assembly area per procedure and the applicant may not recall the proper assembly areas for on shift staff. The OSC is extremely close to the Control Room and where all other personnel assemble. Prior to the new protected area, onshift staffing did assemble in the OSC so this was a normal assembly location for on shift OPS personnel in the recent past.

B. Incorrect. First part is incorrect (See A.1).

Second part is correct (See D.2).

C. Incorrect. First part is correct (See D.1).

Second part is incorrect (See A.2).

D. Correct. First part is correct.NMP-EP-111-001 (pg 17) page announcement has a section to give directions to personnel out in the field if the intent is to allow them to remain in the field. The stem does not indicate that this specific direction is given so the SO will immediately go to his/her assembly area.

Second part is correct. The control room is the proper assembly area per EIP-0.0 and EIP-10.

| | |
|---|---|
| K/A: **G2.4.29** | Knowledge of the emergency plan. |
| Importance Rating: | 3.1 4.4 |
| Technical Reference: | NMP-EP-111-001, Emergency Notification Network Communicator Instructions - Farley, Ver 3.2<br>FNP-0-EIP-0.0, Emergency Organization, Ver 29 |
| References provided: | None |
| Learning Objective: | IDENTIFY AND EXPLAIN the actions to be taken by an individual following an evacuation announcement (OPS40501B04). |
| Question History: | NEW |
| K/A match: | Require the applicant to have **knowledge of an individual's responsibilities when the Emergency Plan** is activated. |
| SRO justification: | N/A |

70. W/E04EA1.1 070

The crew has transitioned to ECP-1.2, LOCA Outside Containment.

- Step 2 of ECP-1.2 is in progress and the first flow path has been isolated.

The following conditions exist:

- Aux Building radiation levels are rising slowly.
- Safety Injection flow is stable.
- Aux Building sump levels are rising slowly.
- PI-402 and 403, RCS 1C/1A LOOP RCS NR PRESS, are rising.

Which one of the following completes the statements below per ECP-1.2?

The first flow path that was isolated was _(1)_ injection.

The intersystem LOCA _(2)_ been isolated.

| | (1) | (2) |
|---|---|---|
| A. | RCP seal | HAS |
| B. | RCP seal | has NOT |
| C.✔ | RHR cold leg | HAS |
| D. | RHR cold leg | has NOT |

**ECP-1.2**
**Step 2:** Try to identify and isolate break.
2.1 Isolate A train RHR cold leg injection path.
2.2 Check RCS pressure - RISING.

2.5 Isolate B train RHR cold leg injection path.
2.6 Check RCS pressure - RISING.

**Distracter analysis**

A. Incorrect. First part is incorrect (See C.1). Plausible since this is isolated during ECP-1.2 but not first.

Second part is correct (See C.2).

B. Incorrect. First part is incorrect (See A.1).

Second part is incorrect (See C.2). Plausible if the applicant does not recall which parameter is used to check leak isolation. Aux building sump levels and radiation levels could cause the applicant to believe that the leak is not isolated. Once the leak was isolated, sump levels could continue to rise as well as radiation levels as the isolated piping drains.

C. Correct. First part is correct. Per step 2 of ECP-1.2, LHSI (RHR cold leg injection) is isolated first.

Second part is correct. Per ECP-1.2, RCS pressure rising is the parameter monitored for verifying the leak is isolated.

D. Incorrect. First part is incorrect (See A.1).

Second part is incorrect (See B.2).

| | |
|---|---|
| K/A: **W/E04EA1.1** | LOCA Outside Containment - Ability to operate and / or monitor **Components, and functions of control and safety systems, including instrumentation, signals, interlocks, failure modes, and automatic and manual features** as they apply to the (LOCA Outside Containment) |
| Importance Rating: | 4.0 4.0 |
| Technical Reference: | FNP-1-ECP-1.2, LOCA Outside Containment, Ver 8 |
| References provided: | NONE |
| Learning Objective: | EVALUATE plant conditions and DETERMINE if any system components need to be operated while performing ECP-1.2, LOCA Outside Containment. (OPS-52532E06)<br><br>ANALYZE plant conditions and DETERMINE the successful completion of any step in ECP-1.2, LOCA Outside Containment. (OPS-52532E07) |
| Question History: | NEW |
| K/A match: | Requires the applicant to know which **components are operated and** be able to determine from listed instrumentation (**monitor) if the leak has stopped during the leak isolation phase of ECP-1.2, LOCA Outside of Containment.** |
| SRO justification: | N/A |

71. W/E05EG2.4.2 071

Unit 1 was operating at 100% power when a Reactor Trip and SI occurred due to a steam line break in containment. The following conditions exist:

- The operating crew is performing the actions of EEP-2.0, Faulted Steam Generator Isolation.
- The maximum total AFW flow rate that can be achieved is 350 GPM.
- Containment pressure is 6 psig and falling.
- SG Narrow range levels are:
  - 1A - Off Scale Low
  - 1B - 32% and decreasing slowly
  - 1C - 34% and decreasing slowly

Which one of the following completes the statement below?

Secondary heat sink _(1)_ adequate because _(2)_.

A. 1) IS

2) 1B and 1C SG levels are sufficient

B. ✔ 1) is NOT

2) Neither SG levels nor AFW flow capability is sufficient

C. 1) IS

2) AFW flow capability is sufficient

D. 1) is NOT

2) 1B and 1C SG levels are sufficient but AFW flow capability is NOT sufficient

**CSF-0/0.3 Heat Sink:** To have adequate heat sink -

SG Narrow Range levels in at least ONE SG greater than 31%{48%}

OR

Total AFW to all SG's > 395 gpm

**Distracter analysis**

A. Incorrect. See B. Plausible if the applicant does not recognize that adverse numbers apply in this scenario then this would be correct.

B. Correct. One SG NR level must be >48% OR AFW flow must be >395 gpm to satisfy the heat sink criteria.

C. Incorrect. See B. Plausible if the applicant does not recall the minimum AFW flow required to meet heat sink and confuses it with 350 gpm which is the design flow rate of one AFW pump.

D. Incorrect. See B. Plausible if the applicant believes that BOTH AFW flow and SG NR levels are required to meet heat sink and does not recognize that adverse numbers apply in this scenario.

K/A: **W/E05EG2.4.2** Loss of Secondary Heat Sink - Knowledge of **system set points**, interlocks and automatic actions **associated with EOP entry conditions**.

Importance Rating: 4.5 4.6

Technical Reference: FNP-1-CSF-0, Critical Safety Function Status Trees, Ver 17

References provided: None

Learning Objective: EVALUATE plant conditions and DETERMINE if entry into (1) FRP-H.1, Response to Loss of Secondary Heat Sink; [..] is required. (OPS-52533F02)

Question History: MOD FNP EXAM BANK

K/A match: Requires the applicant to know the **setpoints of CSF-0** and recognize that heat sink does not exist and the **setpoints which are met for entry into FRP-H.1, Response to Loss of Secondary Heat Sink.**

SRO justification: N/A

72. W/E08EG2.4.6 072

Unit 2 has experienced a large steam break inside containment and the following conditions exist:

- 1A SG Wide Range level indicates 0%.
- AFW flow to 1B and 1C SG is currently 500 gpm.
- FRP-P.1, Response To Imminent Pressurized Thermal Shock, has been entered on a RED Path.
- RCS cold leg temperature continues to decrease slowly.
- RCS pressure is 1500 psig and stable.

Which one of the following completes the statements below concerning the mitigation strategy of FRP-P.1?

The RCS cooldown must _(1)_.

An RCS pressure reduction _(2)_ required.

| | (1) | (2) |
|---|---|---|
| A. | continue | is NOT |
| B. | continue | IS |
| C. | be stopped | is NOT |
| D.✔ | be stopped | IS |

**FRP-P.1:**

**Step 3:** Check cold leg temperature STABLE OR RISING. 3. [CA] Stop the cooldown.

**Step 18:** Reduce RCS pressure.

**FRB-P.1**

**Step 3:** [..] It is important to terminate, if possible, any cooldown in progress to limit the extent of possible vessel damage due to excessive thermal stresses. [...]

**Step 18:** The RCS pressure reduction is intended to decrease pressure stress on the vessel wall as much as possible. [...]

**<u>Distracter analysis</u>**

A. Incorrect. First part is incorrect (See D.1). Plausible since a cooldown will be performed after the 1 hour soak but the overall strategy of FRP-P.1 is to stop the cooldown.

Second part is incorrect (See D.1). Plausible since FRP-P.1 requires the RCS pressure stable for the soak and the applicant could confuse this with current conditions in the stem.

B. Incorrect. First part is incorrect (See A.1).

Second part is correct (See D.2).

C. Incorrect. First part is correct (See D.2).

Second part is incorrect (See A.2)

D. Correct. First part is correct. Per the background document - [...] It is important to terminate, if possible, any cooldown in progress to limit the extent of possible vessel damage due to excessive thermal stresses.

Second part is correct. Per the background document - The RCS pressure reduction is intended to decrease pressure stress on the vessel wall as much as possible.

| | |
|---|---|
| K/A: **W/E08EG2.4.6** | Pressurized Thermal Shock - Knowledge of EOP mitigation strategies. |
| Importance Rating: | 3.7 4.7 |
| Technical Reference: | FNP-2-FRP-P.1, Response to Imminent Pressurized Thermal Shock Conditions, Ver 23<br>FNP-0-FRB-P.1, Specific Background Document For FNP1/2-FRP-P.1, Ver 2 |
| References provided: | NONE |
| Learning Objective: | STATE AND EXPLAIN the basis for all Cautions, Notes, and Actions associated with (1) FRP-P.1, Response to Imminent Pressurized Thermal Shock Condition; [...] (OPS-52533K03)<br><br>EVALUATE plant conditions and DETERMINE if any system components need to be operated while performing (1) FRP-P.1, Response to Imminent Pressurized Thermal Shock Condition; [...] (OPS-52533K06). |
| Question History: | FNP 08 |
| K/A match: | Requires the applicant to **know the mitigation strategy of FRP-P.1, Response to Imminent Pressurized Thermal Shock Conditions, and select the appropriate actions to take under the given conditions.** |
| SRO justification: | N/A |

73. W/E11EK2.1 073

A Dual Unit LOSP with a LOCA on Unit 1 has occurred and the following conditions exist:

- EEP-1.0, Loss of Reactor or Secondary Coolant, is in progress.

**At 1000:**

- WA2, 1-2A DG GEN FAULT TRIP, comes into alarm.

**At 1015:**

- The following alarms are received:
  - CF3, 1A OR 1B RHR PUMP OVERLOAD TRIP
  - CH2, RWST LVL A TRN LO
  - CH3, RWST LVL B TRN LO

Which one of the following states:

1) the status of Unit 1 emergency recirculation capability

and

2) the action(s) that the applicable procedure(s) direct?

A. 1) One train ONLY of emergency recirculation capability has been lost.

2) Transfer to Cold Leg **AND** Containment Spray recirculation at this time.

B. 1) One train ONLY of emergency recirculation capability has been lost.

2) Transfer to Cold Leg recirculation ONLY.

C. ✓ 1) Both trains of emergency recirculation capability have been lost.

2) Minimize HHSI flow to the minimum required to remove decay heat while attempting to restore at least one train of emergency recirculation.

D. 1) Both trains of emergency recirculation capability have been lost.

2) Secure HHSI pumps while attempting to restore at least one train of emergency recirculation.

**This is not a true 2+2 question to improve distracter plausibility.**

**EEP-1:**

| | |
|---|---|
| 13.1 Verify cold leg recirculation capability - AVAILABLE. | 13.1 IF cold leg recirculation capability can NOT be verified, THEN go to FNP-2-ECP-1.1, LOSS OF EMERGENCY COOLANT RECIRCULATION. |

13.1.1 Train A equipment available:

**- 2A RHR Pump**

- CTMT SUMP TO 2A RHR PUMP

Q2E11MOV8811A
- CTMT SUMP TO 2A RHR PUMP
Q2E11MOV8812A
- 2A RHR HX TO CHG PUMP
SUCT Q2E11MOV8706A
- CCW TO 2A RHR HX
Q2P17MOV3185A
OR

13.1.2 Train B equipment
available:
- **2B RHR Pump**
- CTMT SUMP TO 2B RHR PUMP
Q2E11MOV8811B
- CTMT SUMP TO 2B RHR PUMP
Q2E11MOV8812B
- 2B RHR HX TO CHG PUMP
SUCT Q2E11MOV8706B
- CCW TO 2B RHR HX
Q2P17MOV3185B

**ECP-1.1**
**Purpose -** This procedure provides actions to restore emergency coolant recirculation capability, to delay depletion of the RWST by adding makeup and reducing outflow, and to depressurize the RCS to minimize break flow.

**Distracter Analysis**

A. Incorrect. First part is incorrect (See C.1). Plausible if the applicant doesn't recognize that the DG trip results in the loss of the 1A RHR pump.

Second part is incorrect (See C.2). Plausible if the applicant thinks that one train of recirc capability is available because this would be partially correct. The containment spray is not transferred to sump recirc until the RWST is less than 4.5 ft. The applicant could be unfamiliar with the procedure and believe that both cold leg and containment spray are required to be transferred to sump recirc when RWST is at 12.5 ft.

B. Incorrect. First part is incorrect (See A.1)

Second part is incorrect (See C.2). Plausible since this would be the correct answer if recirc capability existed.

C. Correct. First part is correct. Since neither RHR pumps are available so there is no recirculation capability.

Second part is correct. This is the correct strategy for ECP-1.1.

D. Incorrect. First part is correct (See C.1).

Second part is correct (See C.2). Plausible if the applicant recognizes that recirculation capability is lost but incorrectly believes that CH2 and CH3 being in alarm indicates that the RWST is less than 4.5 ft which would make this the correct answer per step 34 of ECP-1.1.

| | |
|---|---|
| K/A: **W/E11EK2.1** | Loss of Emergency Coolant Recirculation - Knowledge of the interrelations between the (Loss of Emergency Coolant Recirculation) and the following: Components, and functions of control and safety systems, including instrumentation, signals, interlocks, failure modes, and automatic and manual features. |
| Importance Rating: | 3.6 3.9 |
| Technical Reference: | FNP-1-EEP-1.0, Loss of Reactor or Secondary Coolant, Ver 31.<br>FNP-1-ECP-1.1, Loss of Emergency Coolant Recirculation, Ver 30 |
| References provided: | None |
| Learning Objective: | EVALUATE plant conditions and DETERMINE if entry into (1) ECP-1.1, Loss of Emergency Coolant Recirculation; and/or (2) ECP-1.3, Loss of Emergency Coolant Recirculation, Caused by Sump Blockage is required. (OPS-52532D02) |
| Question History: | FNP 10 |
| K/A match: | Applicant is required to **know the interrelation between failure modes of the RHR pumps and the Loss of Emergency Coolant Recirculation procedure.** |
| SRO justification: | N/A |

74. W/E12EK1.1 074

The crew is responding to a Steam Line Break on Unit 1.

- Due to equipment failures, ECP-2.1, Uncontrolled Depressurization of All Steam Generators, has been entered.
- All SG Narrow Range levels are 25% and lowering.

Which one of the following completes the statement below?

Per ECP-2.1, AFW flow will be adjusted to _(1)_ .

A. 0 gpm to **each** SG to prevent excessive cooldown

B. ✔ at least 20 gpm to **each** SG to prevent dryout of the SGs

C. at least 20 gpm **total** AFW flow to minimize thermal stress to the SGs

D. at least 395 gpm **total** AFW flow to maintain adequate heat sink

**ECP-2.1**
**Step 4:** [CA] Maintain at least 20 gpm AFW flow to SGs with narrow range level less than 31%{48%}.

**ECB-2.1**
**Basis:** If feed flow to a SG is isolated and the SG is allowed to dry out, subsequent reinitiation of feed flow to the SG could create significant thermal stress conditions on SG components. Maintaining a minimum verifiable feed flow to the SG allows the components to remain in a "wet" condition, thereby minimizing any thermal shock effects if feed flow is increased.

**Distracter Analysis**

A. Incorrect. See B. Plausible because stopping AFW flow would deplete the water inventory and stop the cooldown. This is the strategy of EEP-2.0, to stop all feed flow to the SG and allow it to blow down. This is not allowed by this procedure and would result in a loss of heat sink.

B. Correct. Per ECP-2.1, the operator is required to maintain at least 20 gpm AFW flow to SGs with narrow range level less than 31%{48%} to prevent dryout of the SGs.

C. Incorrect. See B. Plausible if the applicant confuses AFW to EACH versus Total AFW flow. If this were 20 gpm to EACH SG it would be a correct answer.

D. Incorrect. See B. Plausible since this meets the Heat Sink Critical Safety Function Status Tree. FRP-H.1, Response to Loss of Secondary Heat Sink, has a caution that says the following: This procedure should not be performed if total AFW flow is less than 395 gpm due to operator action.

| | |
|---|---|
| K/A: **W/E12EK1.1** | Uncontrolled Depressurization of all Steam Generators - Knowledge of the **operational implications** of the following concepts as they apply to the (Uncontrolled Depressurization of all Steam Generators): Components:, **capacity, and function** of emergency systems. |
| Importance Rating: | 3.4 3.8 |
| Technical Reference: | FNp1-ECP-2.1, Uncontrolled Depressurization of All Steam Generators, Ver 24<br>FNP-0-ECB-2.1, Specific Background Document for FNP-1/2-ECP-2.1, Ver 1 |
| References provided: | None |
| Learning Objective: | EVALUATE plant conditions and DETERMINE if any system components need to be operated while performing ECP-2.1, Uncontrolled Depressurization of All SGs. (OPS-52532F06) |
| Question History: | NEW |
| K/A match: | Requires the applicant to know the AFW flow rate for ECP-2.1 and the **operational implication of lowering AFW flow** (AFW is an emergency system) to 20 gpm (reducing pump capacity) during an Uncontrolled Depressurization of all Steam Generators. Each flow rate has a different operational implication to improve plausibility. |
| SRO justification: | N/A |

75. W/E15EA1.3 075

Which one of the following is the **first** Major Action Category in FRP-Z.2, Response To Containment Flooding, and reason for this in accordance with the background document?

A. ✔ Identify unexpected sources of water in the sump since flooding could damage critical plant equipment.

B. Evaluate the ECCS system status to determine a strategy to transition to simultaneous cold and hot leg recirculation.

C. Have chemistry evaluate sump level, chemistry, and activity level to determine a strategy to transfer excess water out of containment.

D. Notify the TSC of sump chemistry, and activity level to determine potential changes in the planned transition to simultaneous cold and hot leg recirculation.

**FRP-Z.2**
**Step 1:** Try to identify source of water into sump.

• Check indications for components supplied with service water.

• Check indications for components supplied with CCW.

• Check indication of Reactor Makeup Water Storage Tank level.

• Check indication of Demineralized Water Storage Tank level.

FRB-Z.2 Background:
Step 1 Basis: This step instructs the operator to try to identify the unexpected source of the water in the containment sump. Containment flooding is a concern since critical plant components necessary for plant recovery may be damaged and rendered inoperable.

**<u>Distracter analysis</u>**

| | |
|---|---|
| A. Correct. | Step 1 of FRP-Z.2 directs evaluating potential sources of flooding. The background document states - This step instructs the operator to try to identify the unexpected source of the water in the containment sump. Containment flooding is a concern since critical plant components necessary for plant recovery may be damaged and rendered inoperable. |
| B. Incorrect. | See A. Plausible since the ECCS system does enter containment and the applicant may improperly think that this is a source of flooding. If the ECCS system were damaged, then determining a strategy for going on to simultaneous cold and hot leg recirculation would be a plausible reason for this step. There is no step to evaluate ECCS as a source of flooding as it is designed to put water into the recirculation sump via the RCS break. |
| C. Incorrect. | See A. Plausible since this is Step 2 and the basis for this step in FRP-Z.2. The applicant may not be familiar with the procedure and believe that this is the first step. |
| D. Incorrect. | See A. Plausible since Step 3 does have the TSC evaluate sump chemistry, and activity level but not for this reason. |

| | |
|---|---|
| K/A: **W/E15EA1.3** | Containment Flooding - Ability to operate and / or monitor the following as they apply to the (Containment Flooding): Desired operating results during abnormal and emergency situations. |
| Importance Rating: | 2.8 3.0 |
| Technical Reference: | FNP-1-FRP-Z.2, Response To Containment Flooding, Ver 6<br>FNP-0-FRB-Z.2, Specific Background Document for FNP-1/2-FRP-Z.2, Ver 1 |
| References provided: | None |
| Learning Objective: | STATE AND EXPLAIN the basis for all Cautions, Notes, and Actions associated with [...] ; (2) FRP-Z.2, Response to Containment Flooding; [...]. (OPS-52533M03) |
| Question History: | SUMMER 11 |
| K/A match: | Requires to applicant to **monitor containment sump flooding sources and recognize the undesired operating results of not isolating flooding.** |
| SRO justification: | N/A |

76. 001A2.17 076

Unit 1 is at 98% power.

The OATC pulls Control Rods 2 steps and the following indications occur:

- Control Bank D Group Step Counters indicate 227 steps.
- On DRPI, Control Bank D, rod P8 drops to 144 steps.
- On DRPI, all other Control Bank D rods indicate 228 steps.
- Other Control Room parameters indicate Control Rod P8 has dropped to 144 steps.

Which one of the following completes the statements below?

__(1)__ , will come into alarm due to the rod malfunction.

Per the BASES of Tech Spec 3.1.4, Rod Group Alignment Limits, a power reduction to ≤ 75% power is required to ensure __(2)__ .

A. 1) FF5, COMP ALARM ROD SEQ/DEV OR PR FLUX TILT

2) total available rod worth is within safety analyses limits

B. 1) FE2, CONT ROD BANK POSITION LO-LO

2) total available rod worth is within safety analyses limits

C. ✓ 1) FF5, COMP ALARM ROD SEQ/DEV OR PR FLUX TILT

2) the local Linear Heat Rate increases will not exceed core design criteria

D. 1) FE2, CONT ROD BANK POSITION LO-LO

2) the local Linear Heat Rate increases will not exceed core design criteria

A. Incorrect 1) Correct, FF5 will come into alarm due to Control Rod P8 being misaligned by >12 steps.

2) Incorrect, since total available rod worth has not changed. Plausible because a candidate may make a judgment that the control rod that is misaligned is not OPERABLE as described in TS bases 3.1.4, and has to be assumed unavailable for shutdown margin. In actuality, as long as the control rod is trippable it is available for shutdown margin (no information is given in the stem that indicates the control rod is untrippable). A ramp down to a lower power level will require less negative reactivity for a reactor shutdown (and less negative reactivity from total available rod worth) and a candidate may assume this is required by the TS Bases and safety analyses.

B. Incorrect 1) Incorrect, plausible because a single rod is below the Lo-Lo Control Rod insertion limit. If a candidate thought the Rod Insertion limit was calculated from DRPI, this would be a plausible choice. The Rod Insertion limit is actually calculated from the P/A Converter input (in the Rod Control Logic cabinet) providing rod position and median delta T providing Reactor power. DRPI has no input.

2) Incorrect, see A.2.

C. Correct 1) Correct, see A.1.

2) Correct, the TS Bases reason for reducing Reactor power to <75% is to ensure Linear Heat Rate increases on the fuel assemblies outside of the dropped rod area are within limits to ensure fuel integrity.

D. Incorrect 1) Incorrect, see B.1.

2) Correct, see C.2.

K/A: 001A2.17 Control Rod Drive System
A2 Ability to (a) predict the impacts of the following malfunction or operations on the CRDS- and (b) based on those predictions, use procedures to correct, control, or mitigate the consequences of those malfunctions or operations:
(CFR: 41.5/43.5/45.3/45.13)
A2.17 Rod-misalignment alarm . . . . . 3.3 3.8

Importance Rating: 3.3 3.8

Technical Reference: FNP-1-ARP-1.6, v70
FNP-1-AOP-19.0, v29
Tech Specs v190/186
Tech Spec Bases v58

References provided: None

| | |
|---|---|
| Learning Objective: | DETERMINE AND APPLY the information from the LCO BASES sections: BACKGROUND, APPLICABLE SAFETY ANALYSIS, ACTIONS, SURVEILLENCE REQUIREMENTS, for any Technical Specifications or TRM requirements associated with AOP-19, Malfunction of Rod Control System, components and attendant equipment. (OPS-62520S01) 10CFR55.43 (b) 2 |
| Question History: | New question |
| Basis for meeting K/A: | A Control Rod misalignment has occurred during a rod movement. The candidate has to predict the alarm that will be received due to the rod misalignment, based on the plant conditions. Using Tech Spec Bases information, the candidate has to determine why a ramp to < 75% power is required as a result of the misaligned rod. |
| SRO justification: | Facility operating limitations in the TS and their bases. [10 CFR 55.43(b)(2)]<br>• Knowledge of TS bases that is required to analyze TS required actions and terminology.<br><br>The candidate has to apply knowledge of the reason for the ramp to < 75% power due to the Tech Spec action to be <75% within two hours.<br>. |

2013 NRC exam

From the Clarification Guidance for SRO-only Questions Rev 1 dated 03/11/2010 flowchart for 10 CFR 55.43(b)(2) :

1) can NOT be answered by knowing less than 1 hour Tech Specs.
2) can NOT be answered by knowing information listed "above-the-line".
3) can NOT be answered by knowing the TS Safety Limits or their bases.
4) Does involve one or more of the following for TS, TRM or ODCM:

- Knowledge of TS bases that is required to analyze TS required actions and terminology

77. 004A2.02 077

Unit 1 is stable at 100% power with the following conditions:

- AOP-16.0, CVCS Malfunction, is in progress due to a loss of Pressurizer level control.
- At the step to "Check Pressurizer level", Pressurizer level is 76% and rising.

Which one of the following completes the statements below?

The Pressurizer is __(1)__ per Tech Spec 3.4.9, Pressurizer.

Per AOP-16.0, the Control Room crew is required to __(2)__ .

| | (1) | (2) |
|---|---|---|
| A.✔ | NOT OPERABLE | trip the Reactor and go to EEP-0.0, Reactor Trip or Safety Injection |
| B. | NOT OPERABLE | reduce Reactor power/TAVG as necessary using UOP-3.1, Power Operation |
| C. | OPERABLE | trip the Reactor and go to EEP-0.0, Reactor Trip or Safety Injection |
| D. | OPERABLE | reduce Reactor power/TAVG as necessary using UOP-3.1, Power Operation |

A. Correct 1) Correct, per TS 3.4.9, the Pressurizer is not OPERABLE when level is >63.5%.

2) Correct, per AOP-16.0 a Reactor trip and transition to EEP-0 is required. This does not meet the normal Reactor trip setpoint for entry into EEP-0 and is a procedure transition directed in AOP-16 strictly to mitigate the rising Pressurizer level.

B. Incorrect 1) Correct, see A.1.

2) Incorrect, Plausible since this would be a correct answer if Pressurizer level was between 60-75%.

C. Incorrect 1) Incorrect, per TS 3.4.9 the Pressurizer is not OPERABLE when level is >63.5%. Plausible since the Pressurizer high level trip setpoint is 92%. This setpoint is commonly applied for Pressurizer operability and is incorrect.

2) Correct, see A.2.

D. Incorrect 1) Incorrect, see C.1.

2) Incorrect, see B.2.

K/A: 004A2.02 Chemical and Volume Control System:
Ability to (a) predict the impacts of the following malfunctions or operations on the CVCS; and (b) based on those predictions, use procedures to correct, control, or mitigate the consequences of those malfunctions or operations:
(CFR: 41.5/ 43/5 / 45/3 / 45/5)
A2.02 Loss of PZR level (failure mode) . . . . . 3.9 4.2

Importance Rating: 3.9 4.2

Technical Reference: FNP-1-AOP-16.0, v18
Tech Specs v190/186
Tech Spec Bases v58

References provided: None

Learning Objective: EVALUATE plant conditions and DETERMINE if transition to another section of AOP-16, CVCS Malfunction, or to another procedure is required. (OPS-62520K02)

Question History: New question

K/A match: The question tests the ability to predict the impacts of a loss of Pressurizer level control after a CVCS malfunction

causes Pressurizer level to rise uncontrollably. The impacts are a Tech Spec RAS and a Reactor Trip. Based on the failure, the candidate has to select the proper procedure to mitigate the malfunction

SRO justification: Normally knowledge of entry conditions into EEP-0 would be RO knowledge. The normal Reactor trip setpoint for high Pressurizer level is 92% and would be RO knowledge, but in this question selection of EEP-0 is NOT from a direct entry setpoint, but is a procedure transition directed by AOP-16 at 75% Pressurizer level in an effort to control Pressurizer level. This makes this question an SRO procedure selection question rather than a direct EEP-0 entry RO question.

10 CFR 55.43(b)(5)
Assessment of facility conditions and selection of appropriate procedures during normal, abnormal, and emergency situations [10 CFR 55.43(b)(5)], involving BOTH:

1) assessing plant conditions and then
2) selecting a procedure or section of a procedure to mitigate, recover, or with which to proceed.

One area of SRO level knowledge is knowledge of content of the procedure vs. the procedure's overall mitigative strategy or purpose. The applicant's knowledge can be evaluated at the level of 10 CFR55.43(b)(5) by ensuring that the additional knowledge of the procedure's content is required to correctly answer the written test item, for example:

• Assessing plant conditions (normal, abnormal, or emergency) and then selecting a procedure or section of a procedure to mitigate, recover, or with which to proceed.

2013 NRC exam

From the Clarification Guidance for SRO-only Questions Rev 1 dated 03/11/2010 flowchart for 10 CFR 55.43(b)(5) :
Assessment of facility conditions and selection of appropriate procedures during normal, abnormal, and emergency situations [10 CFR 55.43(b)(5)], involving BOTH:

1) assessing plant conditions and then
2) selecting a procedure or section of a procedure to mitigate, recover, or with which to proceed.

Using the flowchart, this question can:

- **NOT** be answered **solely** by knowing "systems knowledge", i.e., how the system works, flowpath, logic, component location.
- **NOT** be answered solely by knowing immediate operator actions.
- **NOT** be answered solely by knowing entry conditions for AOPs or plant parameters that require direct entry to major EOPs.(this is not a direct entry condition into EEP-0)
- **NOT** be answered **solely** by knowing the purpose, overall sequence of events, or **overall mitigative strategy** of a procedure.

- **CAN** be answered with knowledge of ONE or **MORE** of the following:

— **Assessing plant conditions** (normal, abnormal, or emergency) and then **selecting a procedure** or section of a procedure to mitigate, recover, or with which to proceed.

78. 006G2.2.22 078

Unit 1 is in Mode 3 with the following conditions:

- RCS pressure is 1800 psig.
- An RCS heatup is in progress.

1A Accumulator has been declared INOPERABLE.

- 1A Accumulator pressure is 655 psig.
- 1A Accumulator level is 41%.

Per Tech Specs 3.5.1, Accumulators, which one of the following completes the statements below?

Restore 1A Accumulator to OPERABLE by __(1)__ to within the Tech Spec required range.

Tech Spec 3.5.1 BASES states that __(2)__ .

A. 1) lowering 1A Accumulator pressure

2) the maximum pressure limit prevents injecting nitrogen into the RCS during a LOCA

B. ✔ 1) lowering 1A Accumulator pressure

2) the maximum pressure limit prevents the accumulator relief valve from actuating

C. 1) raising 1A Accumulator level

2) the minimum level limit prevents injecting nitrogen into the RCS during a LOCA

D. 1) raising 1A Accumulator level

2) the minimum level limit ensures peak clad temperature remains below 2200°F during a LOCA

This is not a true 2+2 question since the 2nd part of each question has to be plausible and related to the first part. There are four distinct answer choices.

The answer choices "lowering pressure" and "raising level" were chosen to ensure that there were not two possible correct answer choices. The question asks which one of those two actions is required to restore the parameter to within limits. Under certain conditions, lowering level could also lower pressure. By the same token, raising level could raise pressure. The two answer choices were chosen to preclude the action of one correcting the condition of the other.

A. Incorrect 1) Correct, the TS SR 3.5.1.3 limits for Accumulator pressure are ≥ 601 psig and ≤ 649 psig.

2) Incorrect, this is a common misconception that too much nitrogen pressure will cause gas injection into the RCS during a LOCA. During a large break LOCA, nitrogen gas will be injected into the RCS since the RCS pressure is so much lower than the Accumulator pressure.

B. Correct 1) Correct, see A.1.

2) Correct, TS 3.5.1 Bases states "The maximum nitrogen cover pressure limit prevents accumulator relief valve actuation, and ultimately preserves Accumulator integrity."

C. Incorrect 1) Incorrect, the TS SR 3.5.1.2 limits for Accumulator level are ≥ 31.4% and ≤ 58.4%, which is already met in the stem conditions with level at 41%. Plausible since this setpoint could be seen as lower than we normally maintain our safety related tank levels (for example the Condensate Storage Tank or Refueling Water Storage Tank).

2) Incorrect, Plausible since, along with the first part, it would seem that a higher level would prevent nitrogen injection during a LOCA.

D. Incorrect 1) Incorrect, see C.1.

2) Correct, this statement could be correct, but in conjunction with the first part, it makes this whole distracter incorrect. Accumulator injection, along with sufficient level, does help prevent exceeding the peak cladding temperature limit of 2200°F.

K/A: 006G2.2.22 Emergency Core Cooling System (ECCS):
Knowledge of limiting conditions for operations and safety limits.
(CFR: 41.5 / 43.2 / 45.2)
IMPORTANCE RO 4.0 SRO 4.7

Importance Rating: 4.0 4.7

Technical Reference: Tech Specs v190/186
Tech Spec Bases v58

References provided: None

Learning Objective: RECALL AND APPLY the information from the LCO BASES sections: BACKGROUND, APPLICABLE SAFETY ANALYSIS, ACTIONS, SURVEILLENCE REQUIREMENTS, for any Technical Specifications or TRM requirements associated with the Emergency Core Cooling System components and attendant equipment alignment, to include the following (OPS-62102B01): 10CFR55.43 (b) 2
3.5.1 Accumulators
3.5.2 ECCS—Operating
3.5.3 ECCS—Shutdown
3.5.4 Refueling Water Storage Tank (RWST)
2.1.1 Reactor Core Safety Limits

Question History: FNP Bank question ECCS-62102B01 05

K/A match: This question tests the candidate's knowledge of the Tech Spec ECCS Accumulator pressure and level limits. In addition, it tests the TS Bases reason for the limit.

SRO justification: Facility operating limitations in the TS and their bases. [10 CFR 55.43(b)(2)]

- Application of Required Actions (Section 3) and Surveillance Requirements (SR) (Section 4) in *accordance with rules of application* requirements (Section 1).
- Knowledge of TS bases that is required to analyze TS required actions and terminology.

All of the required knowledge is TS below the line limitations. The first part of the question requires the candidate to know the Surveillance requirements for Accumulator level and pressure and determine the action required to restore the Accumulator to OPERABLE status. The second part of the question tests the candidate's knowledge of the TS Bases for the pressure and level limits.

## 2013 NRC exam

From the Clarification Guidance for SRO-only Questions Rev 1 dated 03/11/2010 flowchart for 10 CFR 55.43(b)(2) :

1) can NOT be answered by knowing less than 1 hour Tech Specs.
2) can NOT be answered by knowing information listed "above-the-line".
3) can NOT be answered by knowing the TS Safety Limits or their bases.
4) Does involve one or more of the following for TS, TRM or ODCM:

- Application of Required Actions (Section 3) and Surveillance Requirements (Section 4) in accordance with rules of application requirements (Section 1).
- Knowledge of TS bases that is required to analyze TS required actions and terminology.

79. 008AG2.2.22 079

Unit 1 is in Mode 2 at 3% power when the following occurs:

- PCV-444B, PRZR PORV, fails open.
- The OATC performs actions of AOP-100, Instrumentation Malfunction.
- PCV-444B, PRZR PORV, handswitch RED light remains lit.
- The OATC closes MOV-8000B, PRZR PORV ISO.
- RCS pressure is rising.

Which one of the following completes the statements below per Tech Spec 3.4.11, Pressurizer Power Operated Relief Valves (PORVs)?

PRZR PORV ISO, MOV-8000B is required to be closed with

power __(1)__ .

Entry into Mode 1 __(2)__ allowed by Tech Specs.

| | (1) | (2) |
|---|---|---|
| A.✔ | removed | is NOT |
| B. | maintained | is NOT |
| C. | removed | IS |
| D. | maintained | IS |

**LCO 3.0.4** When an LCO is not met, entry into a MODE or other specified condition in the Applicability shall only be made:

a. When the associated ACTIONS to be entered permit continued operation in the MODE or other specified condition in the Applicability for an unlimited period of time;

b. After performance of a risk assessment addressing inoperable systems and components, consideration of the results, determination of the acceptability of entering the MODE or other specified condition in the Applicability, and establishment of risk management actions, if appropriate; exceptions to this Specification are stated in the individual Specifications, or

c. When an allowance is stated in the individual value, parameter, or other Specification.

This Specification shall not prevent changes in MODES or other specified conditions in the Applicability that are required to comply with ACTIONS or that are part of a shutdown of the unit.

A. Correct 1) Correct, per TS 3.4.11, Condition B, the PORV block valve must be closed and power removed from the MOV.

2) Correct, with the PORV INOPERABLE, and TS 3.4.11 not having specific guidance that a Mode change is allowed with this failure, a mode change is not allowed per TS 3.0.4. Operation for an unlimited amount of time is not allowed for this condition.

B. Incorrect 1) Incorrect, plausible since this is the action required for a leaking PORV.

2) Correct, see A.2.

C. Incorrect 1) Correct, see A.1.

2) Incorrect, plausible since this would be acceptable for a leaking PORV. Operation for an unlimited amount of time with a leaking PORV isolated and power maintained to the Block Valve is allowed, so TS 3.0.4 allows a Mode change for that condition.

D. Incorrect 1) Incorrect, see B.1.

2) Incorrect, see C.2.

K/A: 008AG2.2.22 Pressurizer (PZR) Vapor Space Accident
(Relief Valve Stuck Open)
Knowledge of limiting conditions for operations and safety limits.
(CFR: 41.5 / 43.2 / 45.2)
IMPORTANCE RO 4.0 SRO 4.7

Importance Rating: 4.0 4.7

Technical Reference: Tech Specs v190/186
Tech Spec Bases v58

References provided: None

Learning Objective: RECALL AND APPLY the information from the LCO BASES sections: BACKGROUND, APPLICABLE SAFETY ANALYSIS, ACTIONS, SURVEILLENCE REQUIREMENTS, for any Technical Specifications or TRM requirements associated with the Pressurizer System components and attendant equipment alignment, to include the following (OPS-62101E01): 10CFR55.43 (b) 2
3.4.9, Pressurizer
3.4.10, Pressurizer Safety Valves
3.4.11, Pressurizer Power Operated Relief Valves
13.4.2, Pressurizer
13.4.4, Safety Valves - Shutdown

Question History: Modified from Vogtle 2012 NRC Exam question

K/A match: A Pressurizer PORV has stuck open (Relief Valve Stuck Open). The candidate displays "knowledge of limiting conditions for operations" by determining the TS 3.4.11 requirements for the stuck open PORV, and in addition the candidate is questioned on TS 3.0.4 requirements - is a Mode change allowed?

SRO justification: Facility operating limitations in the TS and their bases. [10 CFR 55.43(b)(2)]

- Application of generic Limiting Condition for Operation (LCO) requirements (LCO 3.0.1 thru 3.0.7; SR 4.0.1 thru 4.0.4).

The first part of the question is ≤ 1 hour TS information for actions required for a stuck open PORV. This is RO knowledge. The second part of the question meets the K/A at the SRO level. SRO knowledge is required to determine if a Mode change is allowed by applying TS 3.0.4. The plant cannot be operated in this condition for an unlimited amount of time, so a Mode change is not allowed per TS 3.0.4.

2013 NRC exam

From the Clarification Guidance for SRO-only Questions Rev 1 dated 03/11/2010 flowchart for 10 CFR 55.43(b)(2) :

1) can NOT be answered by knowing less than 1 hour Tech Specs.
   The first part of the question is ≤ 1 hour TS information for actions required for a stuck open PORV. The second part of the question meets the K/A at the SRO level.
2) can NOT be answered by knowing information listed "above-the-line".

3) can NOT be answered by knowing the TS Safety Limits or their bases.
4) Does involve one or more of the following for TS, TRM or ODCM:

- Application of generic Limiting Condition for Operation (LCO) requirements (LCO 3.0.1 thru 3.0.7; SR 4.0.1 thru 4.0.4).

80. 024AA2.04 080

Unit 1 is in MODE 4, with the following plant conditions:

- LCV-115B, RWST TO CHG PUMP, will not open due to a malfunction within the Limitorque Motor.
- 1B Charging pump is aligned to B train.
- 1B BAT is on service.
- 1A BAT is on standby.
- The 1B DG is declared INOPERABLE.

Which one of the following describes the impact of these conditions on the number of FUNCTIONAL Boration Flowpaths, per TRM 13.1.3, Boration Flow Paths-Operating?

There is(are) _____ FUNCTIONAL boration Flowpath(s) .

A. NO

B.✔ ONLY one

C. ONLY two

D. three

There is only one FUNCTIONAL Borated Water flowpath based on having the 1B BAT and the 1A BAT pump available to discharge to the Charging pump suction. Other sources could be available if the 1B DG were available to support their FUNCTIONALITY.

A. Incorrect The flowpath identified in B below is available.

Plausible if one believed that you could not take credit for the combination of the 1A BAT pump and 1B BAT for a FUNCTIONAL flowpath. If the 1A BAT were in a recirc alignment, this flowpath would not be available, and this would be the correct answer.

B. Correct The only FUNCTIONAL boric acid flowpath per TRM 13.1.3, is from the 1B BAT, through 1A BAT pump to the 1A Charging pump, with the necessary piping intact and valves FUNCTIONAL and able to be powered from an OPERABLE DG (1-2A or 1C).

Because LCV-115B is not FUNCTIONAL, and the 1B DG is INOPERABLE, there is no FUNCTIONAL flowpath (LCV-115B or D) from the RWST to the OPERABLE Charging pump.

Because the 1B DG is INOPERABLE, the B train components are NOT "able to be connected to an OPERABLE Diesel" (1B BATP, 1C or 1B chg pump)

C. Incorrect Only the flowpath identified in B above is available.

Plausible: if one were to believed that the RWST supply path were still FUNCTIONAL (since capable of being manually opened); or if one did not consider the emergency power requirement (OPERABLE Diesel) and its effect on the 1B BAT pump and LCV-115D.

D. Incorrect Only the flowpath identified in B above is available.

Plausible if the candidate considered the following potential flowpaths:
1) a BAT available using 1A BAT pump (which is true)
2) a flowpath via RWST to Charging Pump, LCV115B by manually opening the valve in the fileld.
3) a flowpath via RWST to Charging Pump, LCV115D by manually opening the valve in the fileld. This valve can be operated remotely from the Control Room, but is a B Train valve and has lost its Emergency power supply from the 1B DG.
It is true that you can operate both #2 and #3 manually from the field and it would then be an available boration flowpath. Manual field actions are credited for operation of the manual emergency borate valve (V185) in case an emergency boration is required, and in other cases, manual field actions are frequently required. SRO knowledge is required to know that TRM bases requires that the valves are required to be able to be operated remotely and must have an emergency power supply from an OPERABLE DG.

K/A: 024AA2.06 Emergency Boration:

| | |
|---|---|
| | Ability to determine and interpret the following as they apply to the Emergency Boration:<br>(CFR: 43.5 / 45.13)<br>AA2.04 Availability of BWST . . . . . 3.4 4.2 |
| Importance Rating: | 3.4 4.2 |
| Technical Reference: | TRM 13.1.3<br>TRM 13.1.7 |
| References provided: | None |
| Learning Objective: | RECALL AND APPLY the information from the LCO BASES sections: BACKGROUND, APPLICABLE SAFETY ANALYSIS, ACTIONS, SURVEILLENCE REQUIREMENTS, for any Technical Specifications or TRM requirements associated with the Boric Acid System components and attendant equipment alignment, to include the following (OPS-62101I01): 10CFR55.43 (b) 2<br>13.1.2, Boration Flow Path - Shutdown<br>13.1.3, Boration Flow Path - Operating<br>13.1.6, Borated Water Source - Shutdown |
| Question History: | FNP Bank 024AA2.04. Previously on 2009 North Anna NRC Exam |
| K/A match: | This question requires the candidate to determine if the BATs and RWST are available as an Emergency or Normal Boration flowpath to meet the TRM requirements for minimum flowpaths available.<br><br>This is a recent learning event at FNP see ACD Report CR 2009110930: The 1A BAT was placed on recirc [...] with the 1-2A Diesel Generator removed from service for maintenance. During this time the 1B BAT was on service but was inoperable due to a low level of 20%. With 1-2A Diesel Generator out of service, emergency power would not be available for the RWST to the Charging Pump Suction valve Q1E21LCV115B thus making one of the two RWST flowpaths inoperable. This condition rendered one of the two required boration flowpaths inoperable per TRM 13.1.3. The LCO was exited when 1A BAT was placed back on service at 11:17. |
| SRO justification: | Facility operating limitations in the TS and their bases. [10 CFR 55.43(b)(2)]<br>• Knowledge of TS bases that is required to analyze TS required actions and terminology.<br>• Same items listed above for the Technical Requirements Manual (TRM) and Offsite Dose Calculation Manual (ODCM). |

Knowledge of the TRM Bases and recent OE for application of TRM Bases is required to evaluate and determine the number of boration flowpaths FUNCTIONAL per TRM 13.1.3.

.

2013 NRC exam

From the Clarification Guidance for SRO-only Questions Rev 1 dated 03/11/2010 flowchart for 10 CFR 55.43(b)(2) :

1) can NOT be answered by knowing less than 1 hour Tech Specs.
2) can NOT be answered by knowing information listed "above-the-line".
3) can NOT be answered by knowing the TS Safety Limits or their bases.
4) Does involve one or more of the following for TS, TRM or ODCM:

- Knowledge of TS bases that is required to analyze TS required actions and terminology.
- Same items listed above for the Technical Requirements Manual (TRM) and Offsite Dose Calculation Manual (ODCM).

81. 028G2.1.1 081

Unit 2 is in Mode 5 with the following conditions:

- CTMT Purge was secured for a Local Leak Rate Test (LLRT) and the LLRT Tagout has been cleared.
- R-24A, Containment Radiation Monitor, has been declared INOPERABLE.

**Prior** to placing the CTMT Purge system in operation per SOP-12.2, Containment Purge and Pre-Access Filtration System, which one of the following requirements must be met?

A. R-24A is required to be restored to OPERABLE status.

B. ✔ Gaseous Release Permits are required to be issued.

C. Alternate sampling is required to be performed per the ODCM.

D. CTMT Pre-Access Filtration must be placed in service prior to placing CTMT Purge in service.

A. Incorrect SOP-12.2 requires that either R-24A or B is in service prior to starting Containment Purge. A candidate could think that both rad monitors are required to be in service prior to placing Containment Purge in service. In MODE 5 with no CORE ALTERATIONS in progress, there are no TS requirements for R-24A or B to be in service. Plausible since this answer would be a correct statement if CORE ALTERATIONS or fuel movement were in progress

B. Correct Current Gaseous Release Permits are required to be issued. This is plural because there is also a release permit that is in effect at all times when the Plant Vent Stack exhaust fans are running. Step 4.4.9 has the operator verify this. This is to comply with the ODCM requirement for sampling. The Gaseous Release Permit establishes that the Containment atmosphere has been sampled and its activity is within limits bounded by the ODCM, Table 3-3. (FNP-0-CCP-213.0)

C. Incorrect Plausible since SOP-12.2 has the operator verify R-14 and 22 are aligned for normal operation OR applicable ODCM or TS actions are being performed. These actions may include alternate sampling requirements. Neither R-14 or R-22 is out of service. In addition, SOP-12.2 has alternate sampling requirements for R-14, R-22, or R-29B (step 2.4.3 of Appendix 3). Plausible that the candidate may think these requirements are for R-24A and R-24B.
In MODE 5 with no CORE ALTERATIONS in progress, there are no TS requirements for R-24A or B to be in service.

D. Incorrect Plausible, SOP-12.2 states:
"IF the activity level within containment is determined to be excessive by sample analysis, THEN operate the containment pre-access filtration system per Section 4.1 as necessary to reduce the activity level as specified by Health Physics."

Placing Pre-Access Filtration in service is not always required, but is required when CTMT activity is excessive.

K/A: 028G2.1.1 Hydrogen Recombiner and Purge Control System (HRPS)
Knowledge of conduct of operations requirements.
(CFR: 41.10 / 45.13)
IMPORTANCE RO 3.8 SRO 4.2

Importance Rating: 3.8 4.2

Technical Reference: FNP-2-SOP-12.2, v38

References provided: None

Learning Objective: RECALL AND APPLY the information from the LCO BASES sections: BACKGROUND, APPLICABLE SAFETY ANALYSIS, ACTIONS, SURVEILLENCE REQUIREMENTS, for any Technical Specifications or TRM requirements

associated with Miscellaneous Ventilation System components and attendant equipment alignment, to include the following (OPS-62107D01): 10CFR55.43 (b) 2
13.3.4, Radiation Monitoring Instrumentation
13.7.5, Area Temperature Monitoring (Unit 2 Only)

Question History: FNP Bank question from HLT-28, 2004 NRC Exam
CMNT VENT-62107A02 01

K/A match: Candidate is questioned on the requirements of a Containment atmosphere release. Per the Farley ODCM, a Containment atmosphere release is not considered an effluent release, but there are ODCM requirements for sampling to ensure that the effects will not cause an effluent release to exceed limits in the ODCM. Candidate has to have knowledge of the ODCM and actions required for conducting a release of the Containment atmosphere.

SRO justification: 10 CFR 55.43(b)(2):
Application of Required Actions (Section 3) and Surveillance Requirements (SR) (Section 4) in accordance with rules of application requirements (Section 1).

Same items listed above for the Technical Requirements Manual (TRM) and Offsite Dose Calculation Manual (ODCM).

Requires knowledge of Surveillance Requirements of the ODCM - the ODCM requires sampling of the Containment atmosphere prior to release. This is performed by CHEMISTRY, who then issues a release permit to allow the Containment atmosphere release.

2013 NRC exam

From the Clarification Guidance for SRO-only Questions Rev 1 dated 03/11/2010 flowchart for 10 CFR 55.43(b)(2)

1) can **NOT** be answered by knowing less than 1 hour Tech Specs.
2) can **NOT** be answered by knowing information listed "above-the-line".
3) can **NOT** be answered by knowing the TS Safety Limits or their bases.
4) Does involve **one or** more of the following for TS, TRM or ODCM:

- Application of Required Actions (Section 3) and Surveillance Requirements (SR) (Section 4) in accordance with rules of application requirements (Section 1)..

82. 029EA2.04 082

The following conditions exist on Unit 1:

**At 1000:**

- A Reactor Trip was initiated, but was unsuccessful.
- The crew entered FRP-S.1, Response to Nuclear Power Generation/ATWT.
- The Rover was dispatched to open Reactor Trip breakers.

**At 1005:**

- Per FRP-S.1, an Emergency Boration is in progress from the 1A BAT (Boric Acid Tank).
- FK-122, CHG FLOW, is in AUTO.
- FI-122A, CHG FLOW, indicates 35 gpm.
- All Reactor Trip and Reactor Trip bypass breakers are open.
- The Shift Manager is evaluating emergency classifications.

Which one of the following completes the statements below?

At 1005, Charging flow __(1)__ adequate for the Emergency Boration.

The Shift Manager is required to declare a(n) __(2)__ emergency classification.

**Reference Provided**

| | (1) | (2) |
|---|---|---|
| A. | IS | Alert |
| B. | is NOT | Alert |
| C. | IS | Site Area |
| D.✔ | is NOT | Site Area |

A. Incorrect 1) Incorrect, per FRP-S.1, minimum Emergency Boration flow from the BATs is 30 gpm with minimum Charging flow of 40 gpm.
Plausible: A candidate determining that Charging flow is adequate is plausible because minimum BAT flow is 30 gpm.

2) Incorrect, per NMP-EP-110 Classification Matrix, a Site Area Emergency is required.
Plausible if the candidate determines that the actions to dispatch an operator to manually open the RX trip breakers is considered manually tripping the Reactor.
There is also plausibility that a candidate may choose the Alert classification because the Reactor is shutdown prior to the Shift Manager declaring the initial classification. The Shift Manager has to declare the emergency classification within 15 minutes. The candidate may determine that since Reactor trip breakers are open prior to the end of the 15 minute window, the Manual Trip was successful by opening the trip breakers. This is not a direct look-up since the key to the correct classification is how "Manual Trip" is interpreted. The interpretation of Manual Trip is explained in places other than the reference that is provided to the candidate.

B. Incorrect 1) Correct, minimum Charging flow required during Emergency Boration from the BATs is 40 gpm.

2) Incorrect, see A.2.

C. Incorrect 1) Incorrect, see A.1.

2) Correct, having to drive control rods manually and locally tripping the reactor during FRP-S.1 will be classified as a Site Area Emergency.

D. Correct 1) Correct, see B.1.

2) Correct, see C.2.

K/A: 029EA2.04 Anticipated Transient Without Scram (ATWS) - Ability to determine or interpret the following as they apply to a ATWS:
EA2.04 CVCS centrifugal charging pump operating indication . . . . . 3.2* 3.3*

Importance Rating: 3.2* 3.3*

Technical Reference: FNP-1-FRP-S.1, Response to Nuclear Power Generation/ATWT, V 27
NMP-EP-110-GL01 FNP EALs-IC's, Threshold Values and Basis, Ver 2

References provided: Applicable portion of NMP-EP-110-GL01 that only allows

evaluation of Site Area and Alert classifications

Learning Objective: Using plant procedures/references, ANALYZE a set of plant conditions and DETERMINE the proper classification of the emergency condition as being a NOUE, Alert, Site Area, or General Emergency. (OPS-63002C01).

Question History: New question

K/A match: During an ATWT event, a candidate has to evaluate indications for Charging pump flow and determine if is acceptable during an Emergency Boration per FRP-S.1.

SRO justification: III. Justification for Plant Specific Exemptions UNIQUE to the SRO position:

Justification: A question that is not tied to one of the 10 CFR 55.43(b) items can still be classified as "SRO-only" provided the licensee has documented evidence to prove that the knowledge/ability is "unique to the SRO position" at the site. An example of documented evidence includes:
• The question is linked to a learning objective that is specifically labeled in the lesson plan as being SRO-only (e.g., some licensee lesson plans have columns in the margin that differentiate AO, RO, and SRO learning objectives) [NUREG 1021, ES-401, Section D.2.d]
AND/OR
• A question is linked to a task that is labeled as an SRO-only task, and the task is NOT listed in the RO task list.

**The SRO is solely responsible for determining Classifications at FNP, the objective listed above is an SRO only objectives.**

2013 NRC exam

III. Justification for Plant Specific Exemptions UNIQUE to the SRO position:

DOES NOT MATCH one of the 10 CFR 55.43(b) items but for the Emergency Plan implementation, FNP has classified the knowledge/ability as "unique to the SRO position" as documented within SAT process as ties the knowledge/ability to the licensee's SRO job position duties.

83. 051AG2.1.7 083

Unit 1 is at 28% power with the following conditions:

**At 1000:**

- PR-4029, CONDENSER PRESSURE, indicates as follows:
  - PT0501 is 1.7 psia and slowly rising.
  - PT0502 is 1.7 psia and slowly rising.
- KK1, TURB COND VAC LO, is in alarm.
- HP Gland steam supply pressure is 3.5 psig.
- Main Turbine LP Gland pressures are as follows:
  - #3 LP Gland pressure is 2.0 psig.
  - #4 LP Gland pressure is 4.8 psig.
  - #5 LP Gland pressure is 2.5 psig.
  - #6 LP Gland pressure is 0.5 psig.

**At 1015:**

- PR-4029, CONDENSER PRESSURE, indicates as follows:
  - PT0501 is 2.1 psia and slowly rising.
  - PT0502 is 2.1 psia and slowly rising.
- KK2, TURB COND VAC LO-LO, is in alarm.

Which one of the following completes the statements below per AOP-8.0?

The action required at 1000 to stabilize Condenser pressure is to __(1)__ .

The action required at 1015 is to __(2)__ .

Procedure titles are as follows:

AOP-3.0, Turbine Trip Below P-9 Setpoint
AOP-8.0, Partial Loss of Condenser Vacuum

A. 1) bypass the #6 Gland Seal Regulator

2) perform AOP-3.0 in parallel with AOP-8.0

B. 1) bypass the #6 Gland Seal Regulator

2) perform AOP-3.0 ONLY

C. 1) throttle closed V528, SPILLOVER VALVE BYPASS

2) perform AOP-3.0 in parallel with AOP-8.0

D. 1) throttle closed V528, SPILLOVER VALVE BYPASS

2) perform AOP-3.0 ONLY

A. Correct 1) Correct, per AOP-8.0, step 4.2 - if individual gland seal pressures are not in the band of 1-5 psig (#6 is .5 psig), the RNO action is to bypass the affected gland seal regulator.

2) Correct, per AOP-8.0, step 2. This is a Continuing Action throughout the procedure. Step 2.1.2.1 of the RNO actions requires performing AOP-3.0 in parallel with AOP-8.0.

B. Incorrect 1) Correct, see A.1.

2) Incorrect, performing AOP-3.0 is required when the Turbine is tripped <35% power. Plausible since the candidate may think AOP-3.0 is the highest priority, and since the Turbine is tripped, actions of AOP-8.0 are no longer required.

C. Incorrect 1) Incorrect, plausible if the candidate does not fully understand the function of the Spillover Valve and its Bypass valve. There is a common misconception that this valve controls the Gland Sealing Steam pressures on both the LP Turbine and the HP Turbine. In actuality, it only controls the HP Turbine Gland pressure.

2) Correct, see A.2.

D. Incorrect 1) Incorrect, see C.1.

2) Incorrect, see B.2.

K/A: 051AG2.1.7 Loss of Condenser Vacuum
Ability to evaluate plant performance and make operational judgments based on operating characteristics, reactor behavior, and instrument interpretation.
(CFR: 41.5 / 43.5 / 45.12 / 45.13)
IMPORTANCE RO 4.4 SRO 4.7

Importance Rating: 4.4 4.7

Technical Reference: FNP-1-AOP-8.0, v22.1

References provided: None

Learning Objective: EVALUATE plant conditions and DETERMINE if transition to another section of AOP-8.0, Partial Loss of Condenser Vacuum or to another procedure is required. (OPS-62520H02)

Question History: New question

Basis for meeting K/A: Plant instrumentation conditions are given for a malfunction causing a Loss of Condenser Vacuum event. The candidate has to demonstrate the ability to determine the appropriate

actions to perform per AOP-8.0, and ability to determine proper procedure implementation while in AOP-8.0.

SRO justification: 10 CFR 55.43(b)(5)
Assessment of facility conditions and selection of appropriate procedures during normal, abnormal, and emergency situations [10 CFR 55.43(b)(5)], involving BOTH:
1) assessing plant conditions and then
2) selecting a procedure or section of a procedure to mitigate, recover, or with which to proceed.

The candidate has to have knowledge of the transition criteria in AOP-8.0 (to go to AOP-3.0 upon a Turbine Trip condition), but in addition knowledge of how AOP-3.0 will be implemented (in parallel with AOP-8.0, or alone) is required. This also falls under the 10 CFR 55.43(b)(5) condition of:

Knowledge of when to implement attachments and appendices, including how to coordinate these items with procedure steps.

2013 NRC exam

From the Clarification Guidance for SRO-only Questions Rev 1 dated 03/11/2010
**flowchart for 10 CFR 55.43(b)(5)** :
Assessment of facility conditions and selection of appropriate procedures during normal, abnormal, and emergency situations [10 CFR 55.43(b)(5)], involving BOTH:

1) **assessing plant conditions** and then
2) **selecting** a procedure or section of a procedure to mitigate, recover, or with which to proceed.

Using the flowchart, this question can:

- **NOT** be answered **solely** by knowing "systems knowledge", i.e., how the system works, flowpath, logic, component location. **(PT 1 IS sys/fund knowledge, but PT 2 requires procedural knowledge)**
- **NOT** be answered solely by knowing immediate operator actions.
- **NOT** be answered solely by knowing entry conditions for AOPs or plant parameters that require direct entry to major EOPs.**(Knowledge of how AOP-8.0 is implemented in parallel with AOP-3.0 is required.)**
- **NOT** be answered **solely** by knowing the purpose, overall sequence of events, or **overall mitigative strategy** of a procedure.
- **CAN** be answered with knowledge of ONE or **MORE** of the following:

— **Assessing plant conditions** (normal, abnormal, or emergency) and then **selecting a procedure** or section of a procedure to mitigate, recover, or with which to proceed. **( Yes).**

— **Knowledge of when to implement** attachments **and** appendices, including how to **coordinate** these items with procedure steps. (**Knowledge of how AOP-8.0 is implemented in parallel with AOP-3.0 is required.**).

— **Knowledge of diagnostic steps and decision points** in the EOPs that involve transitions **to event specific sub-procedures** or emergency contingency procedures.

— **Knowledge of administrative procedures that specify** hierarchy, implementation, and/or **coordination** of plant normal, abnormal, and emergency procedures.

84. 054AA2.01 084

Unit 1 is at 37% power with the following conditions:

- FCV-488, 1B SG FW FLOW, fails open and sticks open.

Given the following Tech Spec title:

- 3.7.3, Main Feedwater Stop Valves and Main Feedwater Regulation Valves (MFRVs) and Associated Bypass Valves

With NO OPERATOR ACTIONS, which one of the following completes the statements below?

A Reactor Trip __(1)__ occur.

Per the BASES of Tech Spec 3.7.3, the primary reason for automatic closure of the Main Feedwater Regulating valves is to prevent __(2)__ .

| | (1) | (2) |
|---|---|---|
| A. | will NOT | an excessive mass addition to the Steam Generator during a Steamline Break event |
| B. | will NOT | a radiological release through the feedline penetration during a Steam Generator Tube Rupture event |
| C✓ | WILL | an excessive mass addition to the Steam Generator during a Steamline Break event |
| D. | WILL | a radiological release through the feedline penetration during a Steam Generator Tube Rupture event |

For the conditions in the stem, the SG high level setpoint of 82% will be exceeded and this initiates a Turbine trip, SGFP trip, and FW isolation. Since Reactor power is >35%, an automatic Reactor trip occurs due to the Turbine trip. If Reactor power was <35% an automatic Reactor trip would not occur due to the Turbine trip.

It is plausible that a candidate would recall the AMSAC Turbine Impulse enabling setpoint of 40% as being the setpoint associated with a Turbine trip initiating a Reactor trip.

A. Incorrect - 1) Incorrect, an automatic Reactor trip would occur due to a Turbine trip when above 35% power.
Plausible since power is 37% and AMSAC system enabling setpoint is 40% power. A candidate may incorrectly conclude that an automatic Reactor trip would not occur since Reactor power is <40%.

2) Correct, the Bases for TS 3.7.3 states "The design basis of the MFRVs and Main FW Stop Valves is primarily established by the analyses for the large SLB. Failure of a Main FW Stop Valve and MFRV, or Main FW Stop Valve and MFRV bypass valve to close following an SLB or an excess feedwater event can result in additional mass and energy being delivered to the steam generators, contributing to cooldown. This failure also results in additional mass and energy releases following an SLB or FWLB event."

B. Incorrect - 1) Incorrect, see A.1.

2) Incorrect,
Plausible since most valves that isolate Containment are required to close due to radiological release concerns during a LOCA. Previous question statistics indicate that this response is plausible.

C. Correct - 1) Correct, SG high-high level of 82% initiates a Turbine trip, which initiates a Reactor trip when >35% power.

2) Correct, see A.2.

D. Incorrect - 1) Correct, see C.1.

2) Incorrect, see B.2.

K/A: 054AA2.01 Loss of Main Feedwater (MFW)
Ability to determine and interpret the following as they apply to the Loss of Main Feedwater (MFW):
(CFR: 43.5 / 45.13)
AA2.01 Occurrence of reactor and/or turbine trip . . . . . 4.3 4.4

Importance Rating: 4.3 4.4

Technical Reference: Tech Specs v190/186

Tech Spec Bases v58

References provided: None

Learning Objective: Given a set of Plant Conditions ACCESS those conditions and DETERMINE the ability of plant equipment and structures to meet their intended, designated function (OPS-52302A06)

ANALYZE plant conditions and DETERMINE if actuation or reset of any Engineered Safety Features Actuation Signal (ESFAS) is necessary. (OPS-52530A05)

Question History: Modified FNP Bank AOP-13.0-62520M01 001

K/A match: A FW supply valve has failed open. This causes a high-high level on the associated SG. The high-high level trips the SGFPs and causes a FW isolation signal (Loss of Main Feedwater), as well as a Turbine trip. The candidate has to determine if an automatic Reactor trip occurs due to the high-high SG level.

SRO justification: Facility operating limitations in the TS and their bases. [10 CFR 55.43(b)(2)]

- Knowledge of TS bases that is required to analyze TS required actions and terminology.

Tech Spec Bases provides the background information that the primary reason for the FW isolation signal is to minimize the mass in Containment that can turn to steam and potentially challenge the Containment barrier. The FW Isolation signal minimizes the mass of water added to a SG during accident conditions.

2013 NRC exam

From the Clarification Guidance for SRO-only Questions Rev 1 dated 03/11/2010 flowchart for 10 CFR 55.43(b)(2)

1) can **NOT** be answered by knowing less than 1 hour Tech Specs.
2) can **NOT** be answered by knowing information listed "above-the-line".
3) can **NOT** be answered by knowing the TS Safety Limits or their bases.
4) Does involve **one or** more of the following for TS, TRM or ODCM:

- Knowledge of TS bases that are required to analyze TS required actions and terminology.

85. 055EG2.2.12 085

Unit 1 is in Mode 3 with the following conditions:

- A Grid disturbance caused a loss of all offsite power.
- During the event, the 1-2A DG started and then tripped.
- Operating DG status is as follows:
  - 1C DG is supplying Unit 1.
  - 1B DG is supplying Unit 1.
  - 2B DG is supplying Unit 2.
- ACC reports that the following lines have been **restored**:
  - Webb 230 KV line
  - Snowdoun 500KV line
- #1 Auto Bank Transformer is **out of service**.

Which one of the following completes the statements below for an evaluation of **Unit 1** Tech Specs for the **current conditions**?

Perform REQUIRED ACTION of Tech Spec 3.8.1, AC Sources - Operating, _(1)_ .

A 25% extension of the COMPLETION TIME _(2)_ allowed for the initial performance of SR 3.8.1.1 (STP-27.1, A.C. Source Verification).

**Reference Provided**

| | (1) | (2) |
|---|---|---|
| A. | CONDITION A | IS |
| B. | CONDITION B | IS |
| C. | CONDITION A | is NOT |
| D.✔ | CONDITION B | is NOT |

A Station Blackout has occurred due to a loss of grid event. Once the plant has been stabilized, Tech Specs have to be evaluated for the 1-2A DG trip and for the loss of offsite power supplies to the plant. For the evaluation of offsite power supplies, see Figure 1 of STP-27.1. The 4 Startup Transformers (2 for Unit 1 and 2 for Unit 2) are all powered from the 230KV side of the High Voltage Switchyard (HVSYD) .
There are 4 offsite lines on the 230KV side of the HVSYD, and 2 offsite lines on the 500KV side of the HVSYD. For the two 500KV offsite lines to be considered available, there has to be two Autotransformers to step down voltage from 500KV to 230KV. If only one of the Autotransformers is out of service, then only one of the 500KV offsite lines can be counted as available for offsite sources.

For the given conditions, there is one 230KV line in service and one 500KV line in service. There are normally two Auto bank transformers that will allow flow between the 230KV and 500KV sides of the High Voltage Switchyard, but for this situation there is only one Auto bank transformer available. When only one Auto bank transformer is

available, only one 500KV line can be used as an off-site source. Therefore, two off-site sources are available, one from the 230KV side and one from the 500KV side.

A. Incorrect - 1) Incorrect, plausible since CONDITION A is entered if there is only one offsite line available in the HVSYD (at least two are required). For the conditions given, the candidate may think that there is only one Autotransformer available, and it is out of service. In addition, since the Startup Transformers are powered from the 230KV side of the Switchyard, a candidate may think that only the 230KV source is available and that the 500KV sources cannot be counted as offsite sources. This question requires detailed knowledge of the SR evaluation methodology, STP-27.1.

Selection of CONDITION A may be more plausible than CONDITION B because there are two DG's supplying Unit 1 power. That may lead a candidate to conclude that both DG sets are OPERABLE for Unit 1, so CONDITION B can't be correct and CONDITION A has to be correct.

2) Incorrect, plausible since a 25% grace is allowed for each subsequent performance of the SR. A candidate may not know that it is not allowed for the first performance. There is OE from our plant where there was a misconception that the 25% grace was always applicable.

B. Incorrect - 1) Correct, the 1-2A DG trip makes the Unit 1 'A' Train DG set INOPERABLE.

2) Incorrect, see A.2.

C. Incorrect - 1) Incorrect, see A.1.

2) Correct, per Tech Spec Bases for 3.0.2, a 25% grace is available for SR's that are required to be performed on a "once per X amount of time" basis. This is not applicable for the first performance of the SR.

D. Correct - 1) Correct, see B.1.

2) Correct, see C.2.

K/A: 055EG2.2.12 Loss of Offsite and Onsite Power (Station Blackout):
2.2.12 Knowledge of surveillance procedures.
(CFR: 41.10 / 45.13)
IMPORTANCE RO 3.7 SRO 4.1

Importance Rating: 3.7 4.1

Technical Reference: FNP-1-STP-27.1, A.C. Source Verification, v37.1
Tech Specs v190/186
Tech Spec Bases v58

References provided: Tech Specs 3.8.1, pages 3.8.1-1 to 3.8.1-3 (with Condition

| | |
|---|---|
| Learning Objective: | RECALL AND APPLY the information of the generic LCO requirements (LCO 3.0.1 thru 3.0.7; SR 4.0.1 thru 4.0.4) including the BASES of the generic section , for any Technical Specifications or TRM requirements (OPS-62302A02): 10CFR55.43 (b) 2 |
| Question History: | New question |
| K/A match: | A Station Blackout event has occurred with component failures. Once the transient is controlled, the candidate is required to evaluate Tech Specs for the current conditions and determine if the required surveillance procedure has to be completed within the stated time, or if a 25% grace is allowed. The Tech Spec evaluation requires knowledge of the methodology of the STP-27.1 evaluation of offsite sources available. |
| SRO justification: | Facility operating limitations in the TS and their bases. [10 CFR 55.43(b)(2)]<br>• Knowledge of TS bases that is required to analyze TS required actions and terminology.<br><br>Tech Spec Bases provides the background and explicit instructions for implementation of the 25% grace period allowed for certain performances of SR's. |

2013 NRC exam

From the Clarification Guidance for SRO-only Questions Rev 1 dated 03/11/2010 flowchart for 10 CFR 55.43(b)(2)

1) can **NOT** be answered by knowing less than 1 hour Tech Specs.
2) can **NOT** be answered by knowing information listed "above-the-line".
3) can **NOT** be answered by knowing the TS Safety Limits or their bases.
4) Does involve **one or** more of the following for TS, TRM or ODCM:

- Knowledge of TS bases that are required to analyze TS required actions and terminology.

86. 058AA2.02 086

Unit 1 is at 100% power when the following conditions occur:

- VC4, 1B BATT CHG FAULT OR DISC, alarms.
- EEO5, 1B BATTERY CHARGER SUPPLY BREAKER, has tripped open.
- 1B DC Bus Voltage is 130 Volts.

Given the following Tech Spec titles:

- 3.8.4, DC Sources-Operating
- 3.8.9, Distribution Systems-Operating

Which one of the following completes the statement below?

_____ is(are) required to be implemented.

**Reference Provided**

A. **NEITHER** Tech Spec 3.8.4 **nor** Tech Spec 3.8.9

B. ✔ **ONLY** Tech Spec 3.8.4

C. **ONLY** Tech Spec 3.8.9

D. **BOTH** Tech Spec 3.8.4 and Tech Spec 3.8.9

The Bases of TS 3.8.4 in the LCO section states:
An OPERABLE DC electrical power subsystem requires all required batteries and respective chargers to be operating and connected to the associated DC bus(es).

The Bases of TS 3.8.9 in the LCO section states:
OPERABLE DC electrical power distribution subsystems require the associated buses to be energized to their proper voltage from either the associated battery or charger.

A. Incorrect - REQUIRED ACTIONS of TS 3.8.4 are required to be implemented. Plausible that a candidate could determine that no LCO is required since the bus has power available and the Batteries are rated to carry the bus for a minimum of 2 hours with no Charger aligned. There are questions on this exam and in our exam bank where the correct answer is neither or no action, however in this case this is not correct.

B. Correct - Both a Battery and Charger in operation and supplying proper voltage and connected to the DC bus are required to ensure OPERABILITY per TS 3.8.4.

C. Incorrect - Both a Battery and Charger in operation and supplying proper voltage and connected to the DC bus are required to ensure OPERABILITY per TS 3.8.4. Per TS 3.8.9. **Either** a Battery **or** Charger supplying proper voltage is required to ensure OPERABILITY per TS 3.8.9. It is plausible that a candidate may determine the wrong requirements for this Tech Specs.

D. Incorrect - This is a plausible answer choice since both of these TS's have requirements for the DC system OPERABILITY.

| | |
|---|---|
| K/A: 058AA2.02 | Loss of DC Power<br>Ability to determine and interpret the following as they apply to the Loss of DC Power:<br>(CFR: 43.5 / 45.13)<br>AA2.02 125V dc bus voltage, low/critical low, alarm . . . . . 3.3* 3.6 |
| Importance Rating: | 3.3 3.6 |
| Technical Reference: | Tech Specs v190/186<br>Tech Spec Bases v58 |
| References provided: | Tech Specs 3.8.4 and 3.8.9 (the TS only and not the SR's), pages 3.8.4-1, 3.8.9-1, and 3.8.9-2 |
| Learning Objective: | RECALL AND APPLY the information from the LCO BASES sections: BACKGROUND, APPLICABLE SAFETY ANALYSIS, ACTIONS, SURVEILLENCE REQUIREMENTS, for any Technical Specifications or TRM requirements associated with the DC Distribution System components and attendant equipment alignment, to include the following: (OPS-62103C01) 10CFR55.43 (b) 2 |

3.8.4, DC Sources - Operating
3.8.5, DC Sources – Shutdown
3.8.6, Battery Cell Parameters
3.8.9, Distribution Systems – Operating
3.8.10, Distribution Systems - Shutdown

Question History: 058AA2.02 89 from Farley Test Bank

K/A match: A Battery Charger has tripped off causing an alarm and a loss of Operability per the TS for DC Sources - Operating. The candidate has to interpret the effects of the loss of a Battery Charger with bus voltage still being maintained by the Battery, and determine the proper application of Tech Spec requirements per TS Bases.

SRO justification: Facility operating limitations in the TS and their bases. [10 CFR 55.43(b)(2)]

- Knowledge of TS bases that is required to analyze TS required actions and terminology.

Both of these Tech Specs have a portion related to the DC electrical system. The requirements for OPERABILITY are not defined in the TS. TS Bases knowledge is required to be able to determine the TS applicability.

2013 NRC exam

From the Clarification Guidance for SRO-only Questions Rev 1 dated 03/11/2010 flowchart for 10 CFR 55.43(b)(2)

1) can **NOT** be answered by knowing less than 1 hour Tech Specs.
2) can **NOT** be answered by knowing information listed "above-the-line".
3) can **NOT** be answered by knowing the TS Safety Limits or their bases.
4) Does involve **one or** more of the following for TS, TRM or ODCM:

- Knowledge of TS bases that are required to analyze TS required actions and terminology.

87. 059A2.12 087

Unit 1 tripped from 100% power with the following conditions:

- A Safety Injection occurred due to a Steam Dump malfunction.
- Status of AFW pumps is as follows:
  - 1A MDAFW pump is Tagged Out.
  - 1B MDAFW pump is tripped.
  - The TDAFW pump trip/throttle linkage is broken.
- The Safety Injection signal has been reset.
- FRP-H.1, Response to Loss of Secondary Heat Sink, is in progress with the crew attempting to restore SG level using a Condensate pump.

Which one of the following completes the statements below?

Implementation of FRP-H.1, Attachment 1, Main Feedwater Bypass Valves Automatic Closure Defeat, __(1)__ required to open the Main Feedwater Bypass valves.

Criteria to exit FRP-H.1 is met __(2)__ .

| | (1) | (2) |
|---|---|---|
| A. | IS | ONLY after at least one SG NR level is > 31% |
| B. | is NOT | ONLY after at least one SG NR level is > 31% |
| C. ✔ | IS | when stable Condensate flow is established and SG wide range level is rising |
| D. | is NOT | when stable Condensate flow is established and SG wide range level is rising |

FRP-H.1 is in progress with no AFW pumps available. MSIV closure has occurred due to a Steam Line low pressure MSIV closure signal. The normal course of FRP-H.1 is to attempt to establish condensate flow using a Condensate pump. These actions will continue until either a) Condensate flow is established and SG level is rising or B) Bleed and Feed criteria is met.

A. Incorrect - 1) Correct, Attachment 1 is required to be implemented due to the SI signal in progress. Feed Reg Bypass valves will not open unless this attachment is implemented.

2) Incorrect, plausible since step 10.2 RNO of FRP-H.1 states to continue feeding SGs to restore at least one SG narrow range level to greater than 31%, it gives the impression that 31% level is required to exit the procedure.

B. Incorrect - 1) Incorrect, plausible since SI has been reset. The candidate may think that resetting SI will allow the operator to take control of Feed Reg Bypass valves, thus implementation of Attachment 1 is not required. In addition, if there was no SI, this could be a correct answer. At one time Attachment 1 was only implemented if an SI had occurred.

2) Incorrect, see A.2.

C. Correct - 1) Correct, see A.1.

2) Correct, per step 10.1 -10.3 of FRP-H.1 and the associated note, as long as stable feed flow has been established and SG wide range level is rising, the heat sink critical safety function is satisfied and FRP-H.1 can be exited.

D. Incorrect - 1) Incorrect, see B.2.

2) Correct, see C.2.

K/A: 059A2.12 Main Feedwater (MFW) System

Ability to (a) predict the impacts of the following malfunctions or operations on the MFW; and (b) based on those predictions, use procedures to correct, control, or mitigate the consequences of those malfunctions or operations:
(CFR: 41.5 / 43.5 / 45.3 / 45.13)
A2.12 Failure of feedwater regulating valves . . . . . 3.1* 3.4*

Importance Rating: 3.1 3.4

Technical Reference: OPS Lesson Plan - Reactor Protection, Fig. 17
OPS-62201I/52201I/40302F/ESP-52201, v2.0
FNP-1-FRP-H.1, v27.0

References provided: None

Learning Objective: ASSESS the facility conditions associated with the (1) FRP-H.1, Response to Loss of Secondary Heat Sink; (2) FRP-H.2, Response to SG Overpressure; (3) FRP-H.3, Response to SG High Level; (4) FRP-H.4, Response to Loss of Normal Steam Release Capabilities; (5) FRP-H.5, Response to SG Low Level, and based on that assessment: (OPS-62533F01)

• SELECT the appropriate procedures during normal, abnormal and emergency situations. 10CFR55.43 (b) 5
• DETERMINE if transition to another section of the procedure or to another procedure is required
• DETERMINE if the critical safety functions are satisfied

Question History: Modified from September 2009 Sequoyah NRC Exam Retake #89

K/A match: For the conditions given in FRP-H.1, Feed Reg valves and bypass valves are failed closed due to the SI signal. They are required to be opened to be able to mitigate the accident and feed the SG's from Condensate flow. Candidate has to determine if any additional actions are required to open the valves (implementation of Attachment 1) after the SI signal has occurred and been reset. In addition, candidate has to display knowledge of how to use FRP-H.1 and when the procedure can be exited.

SRO justification: 10 CFR 55.43(b)(5)
Assessment of facility conditions and selection of appropriate procedures during normal, abnormal, and emergency situations [10 CFR 55.43(b)(5)]

One area of SRO level knowledge is knowledge of content of the procedure vs. the procedure's overall mitigative strategy or purpose. The applicant's knowledge can be evaluated at the level of 10 CFR55.43(b)(5) by ensuring that the additional knowledge of the procedure's content is required to correctly answer the written test item, for example:
• Knowledge of diagnostic steps and decision points in the emergency operating procedures (EOP) that involve transitions to event specific subprocedures or emergency contingency procedures.

## 2013 NRC exam

From the Clarification Guidance for SRO-only Questions Rev 1 dated 03/11/2010 flowchart for 10 CFR 55.43(b)(5) :
Assessment of facility conditions and selection of appropriate procedures during

normal, abnormal, and emergency situations [10 CFR 55.43(b)(5)], involving BOTH:

1) assessing plant conditions and then
2) selecting a procedure or section of a procedure to mitigate, recover, or with which to proceed.

Using the flowchart, this question can:

- **NOT** be answered **solely** by knowing "systems knowledge", i.e., how the system works, flowpath, logic, component location.
- **NOT** be answered solely by knowing immediate operator actions.
- **NOT** be answered solely by knowing entry conditions for AOPs or plant parameters that require direct entry to major EOPs.
- **NOT** be answered **solely** by knowing the purpose, overall sequence of events, or **overall mitigative strategy** of a procedure.
- **CAN** be answered with knowledge of ONE or **MORE** of the following:

— **Knowledge of when to implement** attachments **and** appendices, including how to **coordinate** these items with procedure steps. (the first part of the question relates to this, but is not clearly SRO)

— **Knowledge of diagnostic steps and decision points** in the EOPs that involve **transitions to event specific subprocedures** or emergency contingency procedures (the second part of the question relates to this and is clearly SRO)

88. 064G2.2.44 088

Unit 1 is at 100% power when the following occurs:

- WE1, 1F, 1H, OR 1K 4KV BUS BKR AUTO TRIP, is in alarm.
- WE3, 1H 4KV BUS UV OR LOSS OF DC, is in alarm.
- The following indications are noted on the handswitch for 4160V Breaker DF-13-1, SUPPLY TO 1H 4160V BUS:
  - The amber light is lit.
  - The green light is lit.
- The AC PWR AVAIL lights for 1F 4160V bus are illuminated.
- The AC PWR AVAIL lights for 1H 4160V bus are NOT illuminated.

Which one of the following completes the statements below?

The 1C DG _(1)_ autostart due to the DF-13-1 malfunction.

For Unit 1, a REQUIRED ACTION statement of Tech Spec 3.8.1, AC Sources - Operating, _(2)_ required to be implemented.

| | (1) | (2) |
|---|---|---|
| A. | WILL | is NOT |
| B.✔ | WILL | IS |
| C. | will NOT | is NOT |
| D. | will NOT | IS |

This is a difficult question due to the complexity of the DG autostart design and operation.

**For the first part of the question:** There is one dedicated 4075kw DG available for B Train on each Unit (1B DG and 2B DG). Each DG will tie to the G 4160V bus of its respective Unit. Their operation is simple and clearly defined.

For the A Train, there is one 2850kw DG (1C DG) and one 4075kw DG (1-2A DG), both of which are shared between the Units. They can each go to Unit 1 or Unit 2 based on the conditions on each Unit, i.e. LOSP, SI with LOSP, which Unit had the LOSP first etc. The 1C DG will go to the opposite Unit from the 1-2A DG. When powering the busses, they can even divorce from one Unit and tie to the other Unit based on conditions. The 1C DG will tie to U-1 or U-2 H 4160V bus, which is in turn tied to the F 4160V bus by breaker DF-13. The 1-2A DG will tie to U-1 or U-2 F 4160V bus. The intent is to ensure the F 4160V bus is energized to supply safety related loads.

The autostart for the DG's can be even more complicated since the DG operation is different now than from the original design of the plant . For the A Train DGs' autostart for a Unit 1 LOSP, the 1-2A DG gets an autostart signal from the UV relays located on the B1F Sequencer. The 1C DG will autostart from the UV relays located on the B1H Sequencer. It is a common misconception that both A Train DG's start from an UV

signal on the B1F Sequencer. This is because the B1H Sequencer has very few functions any more (original design was to power River Water pumps that used to be safety related, but are no longer safety related and are not powered up during an LOSP). Once the **B1H** Sequencer starts the 1C DG, the **B1F** Sequencer tells 1C DG where to go and sequences the starting of loads. Essentially **B1F** Sequencer takes over all other functions. As a result, the misconception is that the B1F Sequencer performs all actions associated with starting both DG's, deciding which Unit each DG ties to, and sequencing all loads.

For this question, the 1C DG will start due to the LOSP sensed by the B1H Sequencer, 1-2A DG will not start because there is no LOSP sensed by the B1F Sequencer. The 1C DG will start and run unloaded since the B1F Sequencer has not told it to do anything, and the 1H 4160V bus will remain de-energized.

**For the second part of the question:** this is also difficult to evaluate. The 1H bus is no longer considered safety related, but it is required as a support system for operation of the A Train DG set. The 1C DG output breaker will tie to the 1H bus, which has to be able to be tied to the 1F 4160V bus through breaker DF-13-1, to power up safety related loads. The plausibility for no Tech Spec entry required is due to the fact that 1H bus is no longer safety related, but is a support system for operability of the 1C DG. Tech Spec 3.8.1 Bases knowledge or Surveillance test (STP-27.2) knowledge is required to be able to evaluate and answer this question correctly.

A. Incorrect - 1) Correct, 1C DG will autostart. See detailed information above.

2) Incorrect, plausible since the 1H 4160V bus is no longer safety related and not required, except for the fact that it is a support system for the 1C DG. In addition, a candidate may incorrectly determine that the more appropriate LCO would be Electrical Power Systems TS 3.8.9, Distribution Systems - Operating. Since there is no cascading of TS, there would be no LCO for TS 3.8.1.

B. Correct - 1) Correct, see A.1.

2) Correct, a REQUIRED ACTION statement would be implemented since the A Train DG set (composed of 1-2A DG and the 1C DG) is INOPERABLE due to a loss of a support system to the 1C DG.

C. Incorrect - 1) Incorrect, plausible because of the common misconception that the DGs start based on a LOSP on the F 4160V bus and not the H 4160V bus. See detailed information above.

2) Incorrect, see A.2.

D. Incorrect - 1) Incorrect, see C.1.

2) Correct, see B.2.

K/A: 064G2.2.44 Emergency Diesel Generator (ED/G) System
Ability to interpret control room indications to verify the

status and operation of a system, and understand how operator actions and directives affect plant and system conditions.
| (CFR: 41.5 / 43.5 / 45.12)
IMPORTANCE RO 4.2 SRO 4.4

Importance Rating: 4.2 4.4

Technical Reference: OPS Lesson Plans - Diesel Generators and Auxiliaries, v1
Figure 17 - OPS-62102I/52102I/40102C/ESP-52102I
OPS Lesson Plans - Diesel Generator Sequencers, v3
Figure 10 - 62103F/52103F/40102D/ESP-52103F
FNP-1-STP-27.2 v26
Tech Specs v190
Tech Spec Bases v58

References provided: None

Learning Objective: RECALL AND APPLY the information from the LCO BASES sections: BACKGROUND, APPLICABLE SAFETY ANALYSIS, ACTIONS, SURVEILLENCE REQUIREMENTS, for any Technical Specifications or TRM requirements associated with the Diesel Generator and Auxiliaries System components and attendant equipment alignment, to include the following (OPS-62102I01): 10CFR55.43 (b) 2
3.8.1, AC Sources – Operating
3.8.2, AC Sources – Shutdown
3.8.3, Diesel Fuel Oil, Lube Oil, Starting Air

Question History: New question

K/A match: This question requires the candidate to interpret Control Room indications for a tripped breaker supplying the 1H 4160V bus. An evaluation has to be performed to understand how that affects the operation of 1C DG, and then when TS are evaluated, understand how that affects the operability of the DG system.

SRO justification: Facility operating limitations in the TS and their bases. [10 CFR 55.43(b)(2)]

- Knowledge of TS bases that is required to analyze TS required actions and terminology.
- Application of Required Actions (Section 3) and Surveillance Requirements (SR) (Section 4) in a*ccordance with rules of application* requirements (Section 1).

Tech Spec Bases knowledge is required to understand that although the 1H 4160V bus is not safety related and not required by TS, it is a support system for the 1C DG and is required for operability of the 1C DG.

In addition, STP-27.2 provides guidance that the 1H 4160V bus is a support system for the 1C DG.

2013 NRC exam

From the Clarification Guidance for SRO-only Questions Rev 1 dated 03/11/2010 flowchart for 10 CFR 55.43(b)(2)

1) can **NOT** be answered by knowing less than 1 hour Tech Specs.
2) can **NOT** be answered by knowing information listed "above-the-line".
3) can **NOT** be answered by knowing the TS Safety Limits or their bases.
4) Does involve **one or** more of the following for TS, TRM or ODCM:

- Application of Required Actions (Section 3) and Surveillance Requirements (Section 4) in accordance with rules of application requirements (Section 1).
- Knowledge of TS bases that is required to analyze TS required actions and terminology

89. 071G2.2.25 089

Which one of the following describes TRM 13.12.4, Gas Storage Tanks, limitations on the quantity of radioactivity permitted in the Waste Gas Decay Tank(s) and the basis for the limit?

The quantity contained in each Waste Gas Decay Tank shall be ≤ _(1)_ to ensure an uncontrolled release will not exceed a whole body dose of 0.5 REM to _(2)_ .

A. 1) 10 curies, excluding tritium and dissolved or entrained noble gases

2) an operator at the Waste Gas Control Panel

B. 1) 70,500 curies of noble gases (considered as Xe-133)

2) an operator at the Waste Gas Control Panel

C. 1) 10 curies, excluding tritium and dissolved or entrained noble gases

2) an individual at the exclusion area boundary

D. ✔ 1) 70,500 curies of noble gases (considered as Xe-133)

2) an individual at the exclusion area boundary

TR 13.12.2 The quantity of radioactive material contained in any outside temporary tank, excluding liners being used to solidify radioactive wastes, shall be limited to ≤ 10 curies, excluding tritium and dissolved or entrained noble gases.

TR 13.12.4 Gas Storage Tanks
TR 13.12.4 The quantity of radioactivity contained in each gas storage tank shall be limited to ≤ 70,500 curies of noble gases (considered as Xe-133).

A. Incorrect - 1) Incorrect, plausible since the limit for TR 13.12.2 is ≤ 10 curies. The candidate could confuse this curie limit with the correct one.

2) Incorrect, plausible since minimizing dose to operators in the field is a concern. If a WGDT were to rupture, an operator in the field at the Waste Gas Control Panel could receive significant dose.

B. Incorrect - 1) Correct, this is the TRM limit for curie content of a WGDT.

2) Incorrect, see A.2.

C. Incorrect - 1) Incorrect, see A.1.

2) Correct, this is correct as stated in the Bases of TRM 13.12.4. This is the dose limit to protect an individual at the exclusion area boundary.

D. Correct - 1) Correct, see B.1.

2) Correct, see C.2.

| | |
|---|---|
| K/A: 071G2.2.25 | Waste Gas Disposal System (WGDS)<br>Knowledge of the bases in Technical Specifications for limiting conditions for operations and safety limits.<br>(CFR: 41.5 / 41.7 / 43.2)<br>IMPORTANCE RO 3.2 SRO 4.2 |
| Importance Rating: | 3.2 4.2 |
| Technical Reference: | Technical Requirements Manual v24<br>Technical Requirements Manual Bases v9 |
| References provided: | None |
| Learning Objective: | RECALL AND APPLY the information from the LCO BASES sections: BACKGROUND, APPLICABLE SAFETY ANALYSIS, ACTIONS, SURVEILLENCE REQUIREMENTS, for any Technical Specifications or TRM requirements associated with Waste Gas System components and attendant equipment alignment, to include the following |

(OPS-62106B01): 10CFR55.43 (b) 2
13.12.1, Waste Gas Monitoring Instrumentation
13.12.3, Waste Gas Monitoring
13.12.4, Gas Storage Tanks

Question History: New question

K/A match: This question tests the knowledge of an SRO on the information contained in the bases of TRM 13.12.4.

SRO justification: Facility operating limitations in the TS and their bases. [10 CFR 55.43(b)(2)]

- Knowledge of TS bases that is required to analyze TS required actions and terminology.
- Same items listed above for the Technical Requirements Manual (TRM) and Offsite Dose Calculation Manual (ODCM).

Knowledge of the TRM Bases is required to determine the maximum dose to a member of the public during a WGDT rupture.
.

2013 NRC exam

From the Clarification Guidance for SRO-only Questions Rev 1 dated 03/11/2010 flowchart for 10 CFR 55.43(b)(2) :

1) can NOT be answered by knowing less than 1 hour Tech Specs.
2) can NOT be answered by knowing information listed "above-the-line".
3) can NOT be answered by knowing the TS Safety Limits or their bases.
4) Does involve one or more of the following for TS, TRM or ODCM:

- Knowledge of TS bases that is required to analyze TS required actions and terminology.
- Same items listed above for the Technical Requirements Manual (TRM) and Offsite Dose Calculation Manual (ODCM).

90. 073A2.01 090

Unit 1 is at 100% power with the following conditions:

**At 1000:**

- #4 Waste Gas Decay Tank (WGDT) release is in progress.
- CTMT Mini-purge supply and exhaust fans are running.
- The Radwaste Ventilation system is running.

**At 1015:**

- R-14, PLANT VENT, radiation monitor is oscillating erratically.
- The HIGH ALARM and LOW ALARM lights are LIT.
- The Shift Supervisor has declared R-14 INOPERABLE.

Which one of the following completes the statements below?

The WGDT release __(1)__ terminated.

With R-14 INOPERABLE, to continue all the releases that were in progress at 1000, the ODCM requires sampling by obtaining __(2)__ .

**REFERENCE PROVIDED**

| | (1) | (2) |
|---|---|---|
| A.✔ | IS | at least two independent samples |
| B. | IS | grab samples at least once per 8 hours |
| C. | is NOT | at least two independent samples |
| D. | is NOT | grab samples at least once per 8 hours |

Per the ODCM, Table 3-1, Condition 2a, either R-14 or R-22 has to be operable for a Continuous release from the Plant Vent Stack. That is met by R-22 being operable, so Action 37 is not required -
ACTION 37 - With the number of channels OPERABLE less than required by the Minimum Channels OPERABLE requirement, effluent releases via this pathway may continue provided grab samples are taken at least once per 8 hours and these samples are analyzed for gross activity within 24 hours.

Per the ODCM, Table 3-1, Condition 3 is not met due to R-14 being out of service, so Action 35 is required -
ACTION 35 - With the number of channels OPERABLE less than required by the Minimum Channels OPERABLE requirement, the contents of the tank(s) may be released to the environment provided that prior to initiating the release:
a. At least two independent samples of the tank's contents are analyzed, and
b. At least two technically qualified members of the Facility Staff independently verify the discharge line valving, and
(1) Verify the manual portion of the computer input for the release rate calculations performed on the computer, or
(2) Verify the entire release rate calculations if such calculations are performed

manually.
Otherwise, suspend release of radioactive effluents via this pathway.

This question targets the actions required per the ODCM for a normal release of Radwaste Vent, Ctmt Minipurge, and Waste Gas Decay Tanks with a failed radiation monitor, along with systems knowledge of the isolation of a WGDT.

A. Correct - 1) Correct, R-14 going into alarm whether the monitor is failed or erratic will cause RCV-14 to close and the release to be terminated.

2) Correct, ACTION 35 is required to be implemented for the WGDT release, which requires sampling by taking and analyzing two independent samples.

B. Incorrect- 1) Correct, see A.1.

2) Incorrect, but plausible if the applicant determines that implementation of ACTION 37 is required. This requires grab samples to be obtained at least once per 8 hours. This would be correct if <u>both</u> R-14 and R-22 were INOPERABLE.

C. Incorrect- 1) Incorrect, the release will terminate. Plausible since the R-14 is reading erratically and both the high and low lights are LIT. The LOW alarm light will cause a MCB alarm and not isolate RCV-14, but the HIGH alarm light being lit should trigger a MCB alarm and an auto-isolation of RCV-14. The applicant may not understand how this condition affects the automatic functions of the rad monitor, which is to close RCV-14.

2) Correct, see A.2.

D. Incorrect- 1) Incorrect, see C.1.

2) Incorrect, see B.2.

K/A: 073A2.01 Process Radiation Monitoring (PRM) System

Ability to (a) predict the impacts of the following malfunctions or operations on the PRM system; and (b) based on those predictions, use procedures to correct, control, or mitigate the consequences of those malfunctions or operations:
(CFR: 41.5 / 43.5 / 45.3 / 45.13)
A2.01 Erratic or failed power supply..... 2.5 2.9*

Importance Rating: 2.5 2.9*

Technical Reference: FNP-ODCM, v24

References provided: FNP-ODCM , Table 3-1 (page 3-3 & 3-4)

Learning Objective: RECALL AND APPLY the information from the LCO BASES

ANALYSIS, ACTIONS, SURVEILLENCE REQUIREMENTS, for any Technical Specifications or TRM requirements associated with Waste Gas System components and attendant equipment alignment, to include the following (OPS-62106B01): 10CFR55.43 (b) 2
13.12.1, Waste Gas Monitoring Instrumentation
13.12.3, Waste Gas Monitoring
13.12.4, Gas Storage Tanks

Question History: New question

Basis for meeting K/A: R-14, a Process Radiation Monitor, has failed and is INOPERABLE. The RO portion of this question asks if the release is terminated which is the "predict the impacts of the erratic rad monitor" KA match. The SRO must display knowledge of how to read and apply the ODCM to ensure the correct actions are applied. This question provides a scenario in which a normal release will be in progress with a failed rad monitor and the actions for sampling required by the ODCM.

SRO justification: 10 CFR 55.43(b)(2):
Application of Required Actions (Section 3) and Surveillance Requirements (SR) (Section 4) in accordance with rules of application requirements (Section 1).

Same items listed above for the Technical Requirements Manual (TRM) and Offsite Dose Calculation Manual (ODCM).

Requires application of REQUIRED ACTIONS of the ODCM.

2013 NRC exam

From the Clarification Guidance for SRO-only Questions Rev 1 dated 03/11/2010 flowchart for 10 CFR 55.43(b)(2)

1) can **NOT** be answered by knowing less than 1 hour Tech Specs.
2) can **NOT** be answered by knowing information listed "above-the-line".
3) can **NOT** be answered by knowing the TS Safety Limits or their bases.
4) Does involve **one or** more of the following for TS, TRM or ODCM:

- Application of Required Actions (Section 3) and Surveillance Requirements (SR) (Section 4) in accordance with rules of application requirements (Section 1)..

91. 077AG2.4.31 091

Unit 1 is at 100% power with the following conditions:

Several substations are separated from the grid resulting in the following plant conditions:

- Unit 1 Generator Voltage is 20.45 kV.
- The following alarms have actuated:
  — WE2, 1F 4KV BUS OV-OR-UV OR LOSS OF DC.
  — VE2, 1G 4KV BUS OV-OR-UV OR LOSS OF DC.
- Grid frequency has fallen to 59.6 hertz and is stable.
- 4160V Bus voltages are 3840 Volts.
- This condition has existed for the past hour.

Which one of the following completes the statements below?

The Generator temperatures will _(1)_ .

AOP-5.2, Degraded Grid, will require the crew to _(2)_ .

| | (1) | (2) |
|---|---|---|
| A. | RISE | immediately enter AOP-17.1, Rapid Turbine Power Reduction |
| B. | LOWER | immediately enter AOP-17.1, Rapid Turbine Power Reduction |
| C.✔ | RISE | place the unit in mode 3 in the next 6 hours using UOP-3.1, POWER OPERATION |
| D. | LOWER | place the unit in mode 3 in the next 6 hours using UOP-3.1, POWER OPERATION |

AOP-5.2 v14.0

The FNP HV switchyard is connected to the Grid at a location where there is limited generation, and a loss of "various substations" could result in either a loss of load OR a loss of supporting generation (supply).

Generator (and Bus) voltage and frequency display that an OVERLOAD condition has occurred (more load than generation capacity), this would result in HIGHER currents on the Main Generator windings, and VR thus resulting in Greater $I^2R$ losses (MORE HEAT generation). If the condition were to persist, the insulation within the Main Generator begins to break down resulting in a reduction in its RESISTANCE and eventual failure.

Annunciator response procedures for NA1 & NB1, v18, provides the following direction: UNIT 1 procedures state: unlimited operation is allowed between 57 Hz and 61.8 Hz.

Both WE2 and VE2 will direct AOP-5.2 entry, and both are ENTRY CONDITIONS for

AOP-5.2. (RO knowledge).

AOP-5.2, v14.0, step 3 will evaluate bus voltage.

**IF <3850V** then logging voltage **every 30 mins** is required per step 3.2 RNO actions, and aligning equipment for the most reliable conditions. IF the conditions persist for > 1 hour, then **step 11 will require a planned shutdown** to be conducted **within the next 6 hours.**

UNIT 2 contains the following guidance:

**NOTE:** Per FNP-2-SOP-28.1, Turbine Generator Operation, the accumulated time operating between 58.5 Hz and 59.5 Hz should not exceed 60 minutes.

**IF the frequency remains above 57 Hz and approaches the time band limits (see above note), THEN operator action is required to prevent turbine damage by removing the turbine from the grid.**

A. Incorrect 1) Correct, temperatures will rise due to the high current conditions. See above.

2) Incorrect, reducing Reactor power per AOP-17, would exasperate the Grid voltage condition; Reducing Turbine load would result in reducing Grid voltage further and <u>potentially causing a Degraded Grid LOSP condition</u>. The potential damage to the Generator is NOT instantaneous and delaying or slowing the progression of the degraded grid would permit more time for ACC/PCC to correct the condition, before increasing the risk to the plant and/or the public by dropping a significant power supply thus potentially causing an LOSP condition for FNP and a Blackout condition for the grid. (See TS B3.3.5 discussion).

Plausible: The low frequency condition may lead one to believe that the conditions are dire and that immediate action is required to protect the main generator. An immediate load reduction **might be warranted for a HIGH voltage** condition (although only by the direction of PCC/ACC; not directed by AOP-5.2 for a high voltage condition). Also, **if examinee properly assesses the temp impact, then one might believe a rapid load reduction is required to protect the Main Turbine from damage.**

NOTE: immediately is part of answer choice A & B since AOP-17.1 could be required AFTER UOP-3.1 is initiated if a delay is encountered to comply with TS 3.3.5)

B. Incorrect 1) Incorrect, temperatures would go up.
Plausible: This would be the correct temperature response and ACTION **if 4160V bus voltages were >4220 Volts;** caused by a loss of LOAD vs Generation. Lower current flows from the generator and from the voltage regulator would reduce $I^2R$ losses.

2) Incorrect, see A.2
Plausible: **The low voltage conditions on the 4160V bus would result in an increased current draw on each of the loads** within the plant therefore, sustained operation with degraded voltage, one might believe

that the downpower is necessary to protect the **plant components if they had incorrectly assessed the temperature impact** on the Main Generator.

C. Correct 1) Correct, see A.1.

2) Correct, see above procedure quotes/summary. Although it would appear that an immediate response is required for protection of the Main Generator, TS and the procedure direct a more orderly approach to try to restore proper voltage and frequency, and then if necessary take the Unit offline and prevent a challenge to safety systems by inducing an LOSP.

D. Incorrect 1) Incorrect, see B.1.

2) Correct, see C.2.
Plausible: This would be selected if one were to improperly asses the temperature impact, and properly recall the transition requirement within the procedure.

| | |
|---|---|
| K/A: 077AG2.4.31 | Generator Voltage and Electric Grid Disturbances<br>Knowledge of annunciator alarms, indications, or response procedures.<br>(CFR: 41.10 / 45.3)<br>IMPORTANCE RO 4.2 SRO 4.1 |
| Importance Rating: | 4.2 4.1 |
| Technical Reference: | FNP-0-ARP-2.1, v35.0<br>FNP-0-ARP-2.2, v32.2<br>FNP-1-ARP-1.13, v18.1<br>FNP-1-AOP-5.2, v15.0 |
| References provided: | NONE |
| Learning Objective: | EVALUATE plant conditions and DETERMINE if transition to another section of AOP AOP-5.1, Contingency Electrical Alignments and AOP-5.2, Degraded Grid or to another procedure is required. (OPS-62521N02) |
| Question History: | 2011 HLT-34 NRC Exam question # 90<br>This is one of the previous 2 Farley NRC Exams. |
| K/A match: | Generator Voltage is degraded below operational limits of SOP-36.8, the candidate must interpret these indications and determine that the Main Generator is overloaded vs underloaded and a generator overheat condition will occur.<br><br>The candidate must evaluate the indications and determine the actions required by the required procedures. |

SRO justification: 10 CFR 55.43(b)(5)
Assessment of facility conditions and selection of appropriate procedures during normal, abnormal, and emergency situations [10 CFR 55.43(b)(5)], involving BOTH:

1) assessing plant conditions and then
2) selecting a procedure or section of a procedure to mitigate, recover, or with which to proceed.

One area of SRO level knowledge is knowledge of content of the procedure vs. the procedure's overall mitigative strategy or purpose.

AOP-5.1 has two different strategies; based on the conditions of the degraded grid (HI or LOW). To answer this correctly the candidate must have knowledge of:
—the fundamental temperature response to an overload on the Generator.
—the transitions required

2013 NRC exam

From the Clarification Guidance for SRO-only Questions Rev 1 dated 03/11/2010
**flowchart for 10 CFR 55.43(b)(5)** :
Assessment of facility conditions and selection of appropriate procedures during normal, abnormal, and emergency situations [10 CFR 55.43(b)(5)], involving BOTH:

1) **assessing plant conditions** and then
2) **selecting** a procedure or section of a procedure to mitigate, recover, or with which to proceed.

Using the flowchart, this question can:
Using the flowchart, this question can:

- **NOT** be answered **solely** by knowing "systems knowledge", i.e., how the system works, flowpath, logic, component location. **(PT 1 IS sys/fund knowledge, but PT 2 requires procedural knowledge)**
- **NOT** be answered solely by knowing immediate operator actions.
- **NOT** be answered solely by knowing entry conditions for AOPs or plant parameters that require direct entry to major EOPs.
- **NOT** be answered **solely** by knowing the purpose, overall sequence of events, or **overall mitigative strategy** of a procedure. **(PT 2 is procedure selections based on evaluation of conditions and not the generic overall mitigative strategy of the procedure.**
- **CAN** be answered with knowledge of ONE or **MORE** of the following:

— **Assessing plant conditions** (normal, abnormal, or emergency) and then **selecting a procedure** or section of a procedure to mitigate, recover, or with which to proceed. **( Yes).**
— **Knowledge of when to implement** attachments **and** appendices, including how to **coordinate** these items with procedure steps. (Requires knowledge of the TIME requirements for the implementation of the transitions (using transition as equivalent to attachment and appendices of same procedure since AOP-5.2 will be conducted in parallel to UOP-3.1).
— **Knowledge of diagnostic steps and decision points** in the EOPs that involve transitions **to event specific sub-procedures** or emergency contingency

procedures. **(Where "event specific" in this case is the Shutdown guidance)**

— **Knowledge of administrative procedures that specify** hierarchy, implementation, and/or **coordination** of plant normal, abnormal, and emergency procedures. **(The plant shutdown time requirements vs immediately are incorporated within the decision point.)**

92. G2.1.20 092

Unit 1 had an extended Loss of all AC power with the following conditions:

**At 1000:**

- Power has been restored to the 1F and 1K 4160V busses.
- The Shift Supervisor is preparing to exit ECP-0.0, Loss of ALL AC Power, and is at the step to "Evaluate plant conditions".
- SCMM is 39°F.
- Pressurizer level is 16% and slowly falling.
- CTMT pressure is 5.8 psig.
- SI equipment did **NOT** automatically actuate when power was restored.

**At 1002:**

- ECP-0.0 has been exited and the applicable recovery procedure has been entered.
- The Shift Supervisor is informed that a RED path exists for Heat Sink on the IPC CSF status trees.

Which one of the following completes the statements below?

**At 1000**, entry into _(1)_ is required.

**At 1002**, per the applicable procedure in effect, the Control Room crew _(2)_ required to enter FRP-H.1, Loss of Secondary Heat Sink.

Procedure titles are as follows:

ECP-0.1, Loss of All AC Power Recovery Without SI Required.
ECP-0.2, Loss of All AC Power Recovery With SI Required.

| | (1) | (2) |
|---|---|---|
| A. | ECP-0.1 | IS |
| B. | ECP-0.1 | is NOT |
| C. | ECP-0.2 | IS |
| D.✔ | ECP-0.2 | is NOT |

**ECP-0.0 Step 31**

31 Evaluate plant conditions.

**31.1** Check SI not required.

• Check SUB COOLED MARGIN MONITOR indication - GREATER than 16F{45F} SUBCOOLED IN CETC MODE.

• Check Pressurizer level - GREATER THAN 13%{43%}.

• Check SI equipment - HAS NOT ACTUATED UPON AC POWER RESTORATION such that SI flow occurred.

**31.2** Go to FNP-1-ECP-0.1, LOSS OF ALL AC POWER RECOVERY WITHOUT SI REQUIRED.

**31.1** Go to FNP-1-ECP-0.2, LOSS OF ALL AC POWER RECOVERY WITH SI REQUIRED.

A. Incorrect - 1) Incorrect, plausible since SI equipment has not actuated and other parameters at 10:00 would direct a transition to ECP-0.1 if NON-Adverse numbers were applied (See step 31 of ECP-0.0). This would be a correct answer if Containment pressure were < 4 psig.

2) Incorrect, plausible since this is the normal strategy when a FRP red path condition is detected. There is a note above step 1 of ECP-0.2 that states FRP's are not implemented until after completion of step 13.

B. Incorrect - 1) Incorrect, see A.1.

2) Correct, there is a note above step 1 of ECP-0.2 that states FRP's are not implemented until after completion of step 13.

C. Incorrect - 1) Correct, entry into ECP-0.2 is required (See step 31 of ECP-0.0).

2) Incorrect, see A.2.

D. Correct - 1) Correct, see C.1.

2) Correct, see B.2.

K/A: G2.1.20 Ability to interpret and execute procedure steps.
(CFR: 41.10 / 43.5 / 45.12)
IMPORTANCE RO 4.6 SRO 4.6

| | |
|---|---|
| Importance Rating: | 4.6 4.6 |
| Technical Reference: | FNP-1-ECP-0.0 v26<br>FNP-1-ECP-0.2 v19 |
| References provided: | None |
| Learning Objective: | ASSESS the facility conditions associated with the (1) ECP-0.0, Loss of All AC Power; (2) ECP-0.1, Loss of All AC Power Recovery, Without SI Required; (3) ECP-0.2, Loss of All AC Power Recovery, With SI Required, and based on that assessment: (OPS-62532A01)<br>• SELECT the appropriate procedures during normal, abnormal and emergency situations. 10CFR55.43 (b) 5<br>• DETERMINE if transition to another section of the procedure or to another procedure is required<br>• DETERMINE if the critical safety functions are satisfied |
| Question History: | New question |
| K/A match: | This question requires the candidate to interpret the conditions given and choose the correct recovery procedure. In addition, once the procedure transition is made, the candidate has to properly execute implementation of the recovery procedure, ECP-0.2. |
| SRO justification: | 10 CFR 55.43(b)(5)<br>Assessment of facility conditions and selection of appropriate procedures during normal, abnormal, and emergency situations. [10 CFR 55.43(b)(5)] This 10 CFR 55.43 topic involves both 1) assessing plant conditions (normal, abnormal, or emergency) and then 2) selecting a procedure or section of a procedure to mitigate, recover, or with which to proceed. One area of SRO level knowledge (with respect to selecting a procedure) is knowledge of the content of the procedure versus knowledge of the procedure's overall mitigative strategy or purpose.<br><br>Assessing plant conditions (normal, abnormal, or emergency) and then selecting a procedure or section of a procedure to mitigate, recover, or with which to proceed.<br><br>- Procedure selection is required on the first and second parts of this question.<br><br>Knowledge of diagnostic steps and decision points in the EOPs that involve transitions to event specific sub-procedures or emergency contingency procedures.<br>- Knowledge of diagnostic steps is required on the first part of this question. |

From the Clarification Guidance for SRO-only Questions Rev 1 dated 03/11/2010 flowchart for 10 CFR 55.43(b)(5) :
Assessment of facility conditions and selection of appropriate procedures during normal, abnormal, and emergency situations [10 CFR 55.43(b)(5)], involving BOTH:

1) assessing plant conditions and then
2) selecting a procedure or section of a procedure to mitigate, recover, or with which to proceed.

Using the flowchart, this question can:

- NOT be answered solely by knowing "systems knowledge", i.e., how the system works, flowpath, logic, component location.
- NOT be answered solely by knowing immediate operator actions.
- NOT be answered solely by knowing entry conditions for AOPs or plant parameters that require direct entry to major EOPs.
- NOT be answered solely by knowing the purpose, overall sequence of events, or overall mitigative strategy of a procedure.
- Be answered with knowledge of ONE or MORE of the following:
  - **Assessing plant conditions (normal, abnormal, or emergency) and then selecting a procedure or section of a procedure to mitigate, recover, or with which to proceed.**
  - **Knowledge of diagnostic steps and decision points in the EOPs that involve transitions to event specific sub-procedures or emergency contingency procedures.**

93. G2.1.37 093

Unit 1 is at 75% power and ramping up with the following conditions:

- A reactivity plan has been developed and approved for the reactivity additions.
- A Reactivity Management SRO has been stationed due to frequent reactivity additions.

Which one of the following completes the statements below per NMP-OS-001, Reactivity Management Program?

During the ramp up, the limit for Control Rod withdrawal is a maximum of __(1)__ per rod pull.

The Reactivity Management SRO __(2)__ authorize changes to the reactivity plan.

| | (1) | (2) |
|---|---|---|
| A.✔ | three steps | CANNOT |
| B. | three steps | CAN |
| C. | four steps | CANNOT |
| D. | four steps | CAN |

From NMP-OS-001

Step 6.3.9.3 -
Plant Farley and Plant Vogtle 1&2:
When withdrawing control rods in MODE 1, the OATC shall stop rod withdrawal **at least every three steps** and check for expected response on NIs, DRPI, and reactor coolant temperature (i.e. pull and wait).

Step 6.4.2-
While the Reactivity Management SRO provides direct oversight and approval of the planned reactivity additions, the SS must approve the reactivity plan as well as any changes to the plan.

A. Correct - 1) Correct, the limit for Control Rod withdrawal is 3 steps per rod pull.

2) Correct, the Reactivity Management SRO cannot modify the reactivity plan. The SS has to approve the reactivity plan in addition to any changes to the reactivity plan.

B. Incorrect- 1) Correct, see A.1.

2) Incorrect, plausible since the candidate may think the Reactivity Management SRO has taken over the total responsibility for reactivity management.

C. Incorrect- 1) Incorrect, plausible because NMP-OS-001 has a 4 step per rod pull limit for Vogtle 3 & 4 (see step 6.3.9.4 of NMP-OS-001).

2) Correct, see A.2.

D. Incorrect- 1) Incorrect, see C.1.

2) Incorrect, see B.2.

| | |
|---|---|
| K/A: G2.1.37 | Knowledge of procedures, guidelines, or limitations associated with reactivity management.<br>(CFR: 41.1 / 43.6 / 45.6)<br>IMPORTANCE RO 4.3 SRO 4.6 |
| Importance Rating: | 4.3 4.6 |
| Technical Reference: | NMP-OS-001, v17 |
| References provided: | None |
| Learning Objective: | STATE and EXPLAIN the responsibilities of the Reactivity Management SRO as described in NMP-OS-001, Reactivity Management Program. (OPS-62303P03) |
| Question History: | Modified from Farley Bank question<br>RX MGMT-53203P02 04 |

K/A match: The candidate is questioned on the limitations for Control Rod withdrawal during a routine ramp, and also the responsibilities of the Reactivity Management SRO during reactivity manipulations during a ramp.

SRO justification: This question meets the criteria for SRO by requiring the candidate to have knowledge of administrative procedures (NMP-OS-001, Reactivity Management Program) that specifies the responsibilities of the SRO (Reactivity Management SRO) during a ramp when reactivity manipulations are being performed.

10 CFR 55.43(b)(5)
Assessment of facility conditions and selection of appropriate procedures during normal, abnormal, and emergency situations. [10 CFR 55.43(b)(5)] This 10 CFR 55.43 topic involves both 1) assessing plant conditions (normal, abnormal, or emergency) and then 2) selecting a procedure or section of a procedure to mitigate, recover, or with which to proceed. One area of SRO level knowledge (with respect to selecting a procedure) is knowledge of the content of the procedure versus knowledge of the procedure's overall mitigative strategy or purpose.

The applicant's knowledge can be evaluated at the level of 10 CFR55.43(b)(5) by ensuring that the additional knowledge of the procedure's content is required to correctly answer the written test item, for example:

Knowledge of administrative procedures that specify hierarchy, implementation, and/or coordination of plant normal, abnormal, and emergency procedures.

10 CFR 55.43(b)(6)
Procedures and limitations involved in initial core loading, alterations in core configuration, control rod programming, and determination of various internal and external effects on core reactivity. [10 CFR 55.43(b)(6)]

Could also fall under the SRO criteria of this CFR, although not specifically listed as one of the examples. The fact that it is not listed does not exclude it from inclusion if it meets the criteria of 10 CFR 55.43(b)(6). The question is about "Procedures and limitations involved in control rod movement as it relates to internal/external effects on core reactivity".

**Knowledge of administrative procedures that specify hierarchy, implementation, and/or coordination of plant normal, abnormal, and emergency procedures.**

NMP-OS-001 is an administrative procedure that provides guidance on reactivity management during a routine ramp up per UOP-3.1.

This question could also meet the SRO criteria under :

**Procedures and limitations involved in initial core loading, alterations in core configuration, control rod programming, and determination of various internal and external effects on core reactivity. [10 CFR 55.43(b)(6)]**

Although not listed as an example for this category in the "Clarification Guidance for SRO-only Questions", this question does include procedural administrative requirements and controls associated with external effects on core reactivity.

94. G2.2.21 094

Unit 1 is at 100% power with the following conditions:

- The packing was replaced on MOV-8812B, CTMT SUMP TO 1B RHR PUMP.
- The MOV was left in the closed position.
- The Return to Service Tagout is in progress and power has been restored to the MOV.

Which one of the following states the **minimum** action(s) required to restore MOV-8812B to OPERABLE after the valve packing replacement?

MOV-8812B is OPERABLE when _____ .

A. the MOV's auto open function is tested per its Surveillance Test Procedure

B.✔ the MOV has been satisfactorily time stroked per its Surveillance Test Procedure

C. the MOV is stroked open and closed from its remote handswitch per the guidance of the Tagout

D. the MOV is manually stroked open and closed per the guidance of the Tagout, with no leakage verified

A. Incorrect - plausible since this is a safety function of the MOV, and there is a test (STP-11.13) to ensure the valve will auto open when required. Incorrect since no actions have been performed on the MOV that would affect its auto open signal.

B. Correct - Since maintenance was performed on the MOV that could affect its stroke time, and thus the ability to perform its safety function, a Surveillance test that time strokes the valve must be performed.

C. Incorrect - plausible because this is guidance that may be included on the Tagout for a MOV that was manually operated with no maintenance performed that would affect is stroke time. If the MOV had only been manually operated (and no work performed on the MOV), this would be the correct answer.

D. Incorrect - plausible since one of the post maintenance testing actions performed for manual valves that have been repacked is to verify that the valve operates smoothly with no binding, and to also verify no leakage.

K/A: G2.2.21 Knowledge of pre- and post-maintenance operability requirements.
(CFR: 41.10 / 43.2)
IMPORTANCE RO 2.9 SRO 4.1

Importance Rating: 2.9 4.1

Technical Reference: FNP-1-STP-11.6, v40.1
NMP-AD-012, v12.0
FNP-0-SOP-0.13, v26.0

References provided: None

Learning Objective: RECALL AND APPLY the information from the LCO BASES sections: BACKGROUND, APPLICABLE SAFETY ANALYSIS, ACTIONS, SURVEILLENCE REQUIREMENTS, for any Technical Specifications or TRM requirements associated with the Residual Heat Removal System components and attendant equipment alignment, to include the following (OPS-62101K01): 10CFR55.43 (b) 2
3.4.3, RCS Pressure and Temperature (P/T) Limits
3.4.6, RCS Loops – MODE 4
3.4.7, RCS Loops - MODE 5, Loops Filled
3.4.8, RCS Loops - MODE 5, Loops Not Filled
3.4.12, Low Temperature Overpressure Protection (LTOP) System
3.4.14, RCS Pressure Isolation Valve (PIV) Leakage
3.5.2, ECCS – Operating
3.5.3, ECCS – Shutdown
3.9.4, Residual Heat Removal (RHR) and Coolant Circulation - High Water Level
3.9.5, Residual Heat Removal (RHR) and Coolant Circulation - Low Water Level
13.5.1, Emergency Core Cooling System (ECCS)

Question History: New question

K/A match: This question tests the candidate's knowledge of requirements for return to service of a Safety Related piece of equipment after maintenance has been completed. This tests knowledge of what restores operability to a MOV that has had work performed on it that can affect its stroke time.

SRO justification: This question meets the criteria for SRO by requiring the candidate to have knowledge of administrative procedures (FNP-0-SOP-0.13, Recording Limiting Conditions for Operations, and NMP-AD-012, Operability Determinations and Functionality Assessments) that specifies how to return a piece of equipment to service after maintenance and how to use that in conjunction with Tech Specs to declare a system OPERABLE.

10 CFR 55.43(b)(5)
Assessment of facility conditions and selection of appropriate procedures during normal, abnormal, and emergency situations. [10 CFR 55.43(b)(5)] This 10 CFR 55.43 topic involves both 1) assessing plant conditions (normal, abnormal, or emergency) and then 2) selecting a

procedure or section of a procedure to mitigate, recover, or with which to proceed. One area of SRO level knowledge (with respect to selecting a procedure) is knowledge of the content of the procedure versus knowledge of the procedure's overall mitigative strategy or purpose.

Knowledge of administrative procedures that specify hierarchy, implementation, and/or coordination of plant normal, abnormal, and emergency procedures.

Could also be covered by 10 CFR 55.43(b)(2) as knowledge of Surveillance requirements to return a piece of Safety Related equipment to service.

10 CFR 55.43(b)(2):
Application of Required Actions (Section 3) and Surveillance Requirements (SR) (Section 4) in accordance with rules of application requirements (Section 1).

2013 NRC exam

**Knowledge of administrative procedures that specify hierarchy, implementation, and/or coordination of plant normal, abnormal, and emergency procedures.**

**Application of Required Actions (Section 3) and Surveillance Requirements (SR) (Section 4) in accordance with rules of application requirements (Section 1).**

95. G2.2.23 095

Unit 2 is at 100% power with the following conditions:

- The 2B RHR pump is being Tagged Out for a scheduled oil change and maintenance inspection.
- Maintenance is expected to take 36 hours to complete.

Which one of the following completes the statements below?

The LCO required is a __(1)__ LCO.

In addition to a Control Room LCO Log entry, an LCO/TR Status Sheet __(2)__ required to document the LCO.

| | (1) | (2) |
|---|---|---|
| A.✔ | Voluntary | IS |
| B. | Voluntary | is NOT |
| C. | Mandatory | IS |
| D. | Mandatory | is NOT |

**SOP-0.13**

3.0.1 **Initiation of Hard Copy LCO/TR ACTION statement**

When a unit fails to meet an applicable LCO/TR and requires initiation of an ACTION statement, or equipment malfunction requires an Admin LCO/TR, the SS or a licensed individual shall:

a. Complete Figure 4, "LCO/TR Status Sheet" Section I.

3.0.2 **Short Term LCO's**

Initiation of short term (log or computer entry) LCO/TR ACTION statement Completion of an LCO/TR Status Sheet is NOT required for the performance of surveillances or short term entry into an LCO/TR which will be cleared prior to turning over the Control Room Log for the shift.

3.1.3 **Type of LCO/TR**

IF the LCO/TR becomes effective due to circumstances beyond the Shift Supervisor's control (i.e., a covered piece of equipment breaks), then this will be indicated by entering "Mandatory" (M).

IF the LCO becomes effective due to the Shift Supervisor's decision (i.e., a covered piece of equipment is voluntarily removed from service for maintenance etc.), then this will be indicated by entering "Voluntary" (V).

If a piece of equipment is removed from service that is not required in the present plant mode, but is required in an higher plant mode or if it reduces the redundancy, then an Administrative LCO may be written. This will be indicated by entering "Administrative" (A).

voluntarily removed from service, it is a Voluntary LCO.

2) Correct, an LCO/TR Status sheet is required if the LCO will be in effect for longer than one shift. Since the LCO will be in effect for 36 hours, a LCO/TR Status Sheet is required to be filled out.

B. Incorrect 1) Correct, see A.1.

2) Incorrect, plausible because per SOP-0.13 it is acceptable to only make an entry into the Control Room Log for LCO's that are of short duration (will be restored prior to the end of the shift).

C. Incorrect 1) Incorrect, Mandatory LCO's are required when an unplanned event occurs that makes a piece of equipment INOPERABLE. If the equipment was failed when removed from service, it is a Mandatory LCO. Plausible that a candidate may think it is a Mandatory LCO since he may associate Voluntary LCO's with Admin LCO's. Since this is an actual Tech Spec entry, where REQUIRED ACTIONS are implemented, he may determine it is a Mandatory LCO

2) Correct, see A.2.

D. Incorrect 1) Incorrect, see C.1.

2) Incorrect, see B.2.

| | |
|---|---|
| K/A: G2.2.23 | Equipment Control - Ability to track Technical Specification limiting conditions for operations.<br>(CFR: 41.10 / 43.2 / 45.13)<br>IMPORTANCE RO 3.1 SRO 4.6 |
| Importance Rating: | 3.1 4.6 |
| Technical Reference: | FNP-0-SOP-0.13, Recording Limiting Conditions for Operations, v26.0 |
| References provided: | None |
| Learning Objective: | STATE AND DESCRIBE the process for recording and tracking the failure to meet the Limiting Condition for Operation and Technical Requirements (OPS-52302A07) |
| Question History: | New question |
| K/A match: | Candidate is given conditions where an LCO is required, and has to determine if the LCO is Mandatory/Voluntary. In addition the candidate has to determine what tools are acceptable for tracking the status of the LCO. |
| SRO justification: | This question meets the criteria for SRO by requiring the candidate to have knowledge of administrative procedures |

Operations) that specifies how to document and track Tech Spec LCO's (implementation of Tech Specs).

10 CFR 55.43(b)(5)
Assessment of facility conditions and selection of appropriate procedures during normal, abnormal, and emergency situations. [10 CFR 55.43(b)(5)] This 10 CFR 55.43 topic involves both 1) assessing plant conditions (normal, abnormal, or emergency) and then 2) selecting a procedure or section of a procedure to mitigate, recover, or with which to proceed. One area of SRO level knowledge (with respect to selecting a procedure) is knowledge of the content of the procedure versus knowledge of the procedure's overall mitigative strategy or purpose.

The applicant's knowledge can be evaluated at the level of 10 CFR55.43(b)(5) by ensuring that the additional knowledge of the procedure's content is required to correctly answer the written test item, for example:

Knowledge of administrative procedures that specify hierarchy, implementation, and/or coordination of plant normal, abnormal, and emergency procedures.

2013 NRC exam

**Knowledge of administrative procedures that specify hierarchy, implementation, and/or coordination of plant normal, abnormal, and emergency procedures.**

96. G2.3.14 096

Unit 1 is shutdown with the following conditions:

- STP-18.4, Containment Mid-Loop and/or Refueling Integrity Verification and Containment Closure, has been completed to allow refueling operations.
- The Containment Equipment Hatch is open.
- During fuel movement, a spent fuel assembly has dropped from the Manipulator Crane to the bottom of the cavity.
- Both R-24A & B, CTMT PURGE, are in alarm.
- AOP-30, Refueling Accident, actions are in progress.

Which one of the following completes the statements below?

The ACCEPTANCE CRITERIA of STP-18.4 for Refueling Integrity states that the Containment Equipment Hatch is capable of being closed within __(1)__ of notification.

Per AOP-30, actions are required to place __(2)__ in service without delay.

| | __(1)__ | __(2)__ |
|---|---|---|
| A. | four hours | PRF (Penetration Room Filtration) |
| B. | four hours | CREFS (Control Room Emergency Filtration System) |
| C. | two hours | PRF (Penetration Room Filtration) |
| D.✔ | two hours | CREFS (Control Room Emergency Filtration System) |

A. Incorrect - 1) Incorrect, plausible since some actions of Tech Specs and the ODCM allow a four hour time frame for completion.

2) Incorrect, plausible since AOP-30.0 directs to start PRF if it is a high radiation condition in the Spent Fuel Pool area. Since PRF also performs a function for atmospheric cleanup for a high radiation condition and leakage into the Penetration rooms, it is plausible that a candidate would determine that it should be started here.

B. Incorrect - 1) Incorrect, see A.1.

2) Correct, CREFS is required to be started without delay. This is directed at step 2 of AOP-30.0. In addition, there is a Caution statement at the beginning of Attachment 1 of AOP-30 (Control Room Isolation with CREFS in Service) to place CREFS in service without delay to ensure continued Control Room habitability.

C. Incorrect - 1) Correct, per step 2.3.1 of STP-18.4. The Acceptance Criteria states :A Maintenance Closure Response Team (MCRT) is available and briefed to effect closure within two hours of notification.

2) Incorrect, see A.2.

D. Correct - 1) Correct, see C.1.

2) Correct, see B.2.

| | |
|---|---|
| K/A: G2.3.14 | Knowledge of radiation or contamination hazards that may arise during normal, abnormal, or emergency conditions or activities.(CFR: 41.12 / 43.4 / 45.10)<br>IMPORTANCE RO 3.4 SRO 3.8 |
| Importance Rating: | 3.4 3.8 |
| Technical Reference: | FNP-1-AOP-30, v19.0<br>FNP-1-STP-18.4, v39.0 |
| References provided: | None |
| Learning Objective: | RECALL AND APPLY the information from the required actions (section 3) and surveillance requirements (section 4) in accordance with rules of application requirements (Section 1) for any Technical Specifications or TRM requirements (OPS-62302A01): 10CFR55.43 (b) 2 |
| Question History: | New question |
| K/A match: | Candidate is given conditions where a fuel handling accident has occurred. Knowledge of the radiation hazards is displayed by choosing the actions that should be taken to mitigate the radiation hazard. |
| SRO justification: | 10 CFR 55.43(b)(2):<br>Application of Required Actions (Section 3) and Surveillance Requirements (SR) (Section 4) in accordance with rules of application requirements (Section 1).<br><br>This question requires knowledge of the Surveillance Requirement of STP-18.4 Acceptance Criteria that states : A Maintenance Closure Response Team (MCRT) is available and briefed to effect closure within two hours of notification. |

2013 NRC exam

From the Clarification Guidance for SRO-only Questions Rev 1 dated 03/11/2010 flowchart for 10 CFR 55.43(b)(2)

1) can **NOT** be answered by knowing less than 1 hour Tech Specs.
2) can **NOT** be answered by knowing information listed "above-the-line".
3) can **NOT** be answered by knowing the TS Safety Limits or their bases.
4) Does involve **one or** more of the following for TS, TRM or ODCM:

- Application of Required Actions (Section 3) and Surveillance Requirements (SR) (Section 4) in accordance with rules of application requirements (Section 1)..

97. G2.3.6 097

Unit 1 is operating at 100% power with the following conditions:

- A release of the #2 Waste Monitor Tank (WMT) is planned.
- R-18, LIQ WASTE DISCH, is INOPERABLE.
- Chemistry has taken two independent samples of the #2 WMT and reports the activity is <1.4 x$10^{-5}$ µCi/ml and is within the normal limits for a release.
- Two Shift Radio-Chemists have verified the manual input for the computer generated release rate calculation.

Which one of the following completes the statement below?

Per the ODCM, a WMT release _____ .

A. is NOT permitted until the activity is lowered to <1x$10^{-7}$ µCi/ml

B. is NOT permitted with R-18 INOPERABLE, but the tank can be transferred to Unit 2 for release

C. ✓ IS permitted, but as a minimum two qualified plant personnel are required to verify the discharge lineup **only**

D. IS permitted, but as a minimum two qualified plant personnel are required to verify the discharge lineup **and** an SRO is required to verify the entire release rate calculation

A. Incorrect The release limit of 1x$10^{-7}$ µCi/mL is that for **SGBD per action 29 when R-23B is INOPERABLE**, not applicable to the R-18 release path, therefore a release is permitted at this activity. The activity is NOT too high for release assuming all the requirements of the ODCM are met.

Plausible: Two consecutive samples must be taken, and must be within release limits (the release limit provided exceeds the limit which is applicable only to SGBD Release path).

B. Incorrect A release is allowed on Unit 1 as long as the actions required by the ODCM for R-18 being INOPERABLE are implemented.

Plausible: Because there are interconnecting piping arrangements between Unit 1 and Unit 2 that allow transfer of waste water between the Units. The tank could eventually be released from Unit 2 and be discharged through an OPERABLE R-18 radiation monitor.

C. Correct This answer choice describes the actions required by ACTION 28 of Table 2-1 of the ODCM which states the effluent releases may continue provided that prior to initiating the release:

a. "Two separate samples must be analyzed,
b. two independent qualified members of facility staff verify the discharge line valving and verify:

calculations

**OR**

2) the entire release rate calculations if performed manually.

A liquid release permit is required to be reviewed by the SSS per SOP-50.1 appendices 1&2 to verify the above requirements are satisfied.

D. Incorrect The second part is incorrect, the SRO is not required to verify the calculation. The ODCM requires that the release rate calculations are verified by TWO qualified facility personnel, and the discharge flowpath also verified by TWO qualified facility personnel; NEITHER requires an SRO or licensed operator and both are normally not performed by an SRO or licensed operator. The System operators normally complete the valve lineup and verification while the Chemists normally complete the calculations and verifications. Further, the "entire release rate calculation" is not "REQUIRED" unless the calculation is done manually, but again is not REQUIRED to be performed by an SRO.

All actions of ACTION 28 of the ODCM have been completed except the release lineup has to be verified.

Plausible: It could be assumed that the SRO has to perform the verification of the release rate calculations. This is not the case, the ODCM requires two technically qualified personnel. There is no requirement for one of those to be an SRO.

| | |
|---|---|
| K/A: G2.3.6 | Ability to approve release permits.<br>(CFR: 41.13 / 43.4 / 45.10)<br>IMPORTANCE RO 2.0 SRO 3.8 |
| Importance Rating: | 2.0 3.8 |
| Technical Reference: | FNP-ODCM, v24 |
| References provided: | None |
| Learning Objective: | OPS-62106A01—RECALL AND APPLY the information from the LCO BASES sections: BACKGROUND, APPLICABLE SAFETY ANALYSIS, ACTIONS, SURVEILLENCE REQUIREMENTS, for any Technical Specifications or TRM requirements associated with Liquid and Solid Waste System components and attendant equipment alignment, to include the following<br>• 5.5.1, Offsite Dose Calculation Manual (ODCM) |
| Question History: | 2011 HLT-34 NRC Exam question # 97<br>This is one of the previous 2 Farley NRC Exams. |

K/A match: The SRO must approve a release if ODCM actions are required prior to the release. For a normal release the Chemistry Department provides the final approval of the permit, but the affected unit's SS (SRO) must also provide approval for the release. This question provides a scenario in which the release cannot be allowed until ODCM actions are accomplished as determined by the SRO, and the applicant must recall what completed actions allow approving the release.

SRO justification: 10CFR55.43 (b) (2)
Some examples of SRO exam items for this topic include:
• Application of Required Actions (Section 3) and Surveillance Requirements (SR) (Section 4) in accordance with rules of application requirements (Section 1).
• Same items listed above for the Technical Requirements Manual (TRM) and Offsite Dose Calculation Manual (ODCM).

2013 NRC exam

10 CFR 55.43(b)(2)

Facility operating limitations in the TS and their bases. [10 CFR 55.43(b)(2)]

From the Clarification Guidance for SRO-only Questions Rev 1 dated 03/11/2010 flowchart:

1) can **NOT** be answered by knowing less than 1 hour Tech Specs.
2) can **NOT** be answered by knowing information listed "above-the-line".
3) can **NOT** be answered by knowing the TS Safety Limits or their bases.
4) Does involve one **or more** of the following for TS, TRM or ODCM:
   - **Application of Required Actions (Section 3) and Surveillance Requirements** (Section 4) in accordance with rules of application requirements (Section 1). (Required actions for INOPERABLE R-18 rad monitor have to be implemented per the ODCM.)

98. G2.4.6 098

Unit 1 tripped from 100% power with the following conditions:

- A Safety Injection was actuated due to a SG Tube Rupture on the 1B SG.
- The crew is performing EEP-3.0, Steam Generator Tube Rupture.
- The following results are reported:
  — HV3369B, 1B SG MSIV, will not close.
  — HV3370B, 1B SG MSIV, will not close.
- 1B SG pressure is 950 psig.

Which one of the following completes the statements below?

The Control Room crew is required to __(1)__ .

The recovery strategy for the selected procedure is to __(2)__ .

Procedure titles are as follows:
EEP-3.0, Steam Generator Tube Rupture
ECP-3.1, SGTR with Loss of Reactor Coolant Subcooled Recovery Desired

| | (1) | (2) |
|---|---|---|
| A. | continue in EEP-3.0 | **complete** an RCS cooldown first; then perform an RCS depressurization |
| B. | transition to ECP-3.1 | **complete** an RCS cooldown first; then perform an RCS depressurization |
| C. | continue in EEP-3.0 | **start** an RCS cooldown and then perform an RCS depressurization during the cooldown |
| D✓ | transition to ECP-3.1 | **start** an RCS cooldown and then perform an RCS depressurization during the cooldown |

A. Incorrect - 1) Incorrect, plausible since SG pressure is at normal pressure. There is a transition point in EEP-3.0 that sends you to ECP-3.1 if SG pressure is <250 psig. A candidate may think that since SG pressure is higher than 250 psig, actions will continue in EEP-3.0 (step 5 of EEP-3.0).

2) Incorrect, plausible since this is the normal strategy for actions in EEP-3.0, but EEP-3.0 is not the correct procedure for performing the actions.

B. Incorrect - 1) Correct, per EEP-3.0, if at least one MSIV is not closed in the ruptured SG, go to ECP-3.1 (step 3.7 of EEP-3.0).

2) Incorrect, see A.2.

C. Incorrect - 1) Incorrect, see A.1.

2) Correct, this is the strategy for ECP-3.1..

D. Correct - 1) Correct, see B.1.

2) Correct, see C.2.

| | |
|---|---|
| K/A: G2.4.6 | Knowledge of EOP mitigation strategies.<br>(CFR: 41.10 / 43.5 / 45.13)<br>IMPORTANCE RO 3.7 SRO 4.7 |
| Importance Rating: | 3.7 4.7 |
| Technical Reference: | FNP-1-EEP-3.0 v27 |
| References provided: | None |
| Learning Objective: | ASSESS the facility conditions associated with the EEP-3, Steam Generator Tube Rupture and based on that assessment: (OPS-62530D01)<br>• SELECT the appropriate procedures during normal, abnormal and emergency situations. 10CFR55.43 (b) 5<br>• DETERMINE if transition to another section of the procedure or to another procedure is required<br>• DETERMINE if the critical safety functions are satisfied |
| Question History: | New question |
| K/A match: | The second part of the question deals with knowledge of EOP mitigation strategies - specifically how the cooldown is performed and how the depressurization is performed. It is different between EEP-3.0 and ECP-3.1. |
| SRO justification: | 10 CFR 55.43(b)(5)<br>Assessment of facility conditions and selection of |

appropriate procedures during normal, abnormal, and emergency situations. [10 CFR 55.43(b)(5)] This 10 CFR 55.43 topic involves both 1) assessing plant conditions (normal, abnormal, or emergency) and then 2) selecting a procedure or section of a procedure to mitigate, recover, or with which to proceed. One area of SRO level knowledge (with respect to selecting a procedure) is knowledge of the content of the procedure versus knowledge of the procedure's overall mitigative strategy or purpose.

Assessing plant conditions (normal, abnormal, or emergency) and then selecting a procedure or section of a procedure to mitigate, recover, or with which to proceed.

Knowledge of diagnostic steps and decision points in the EOPs that involve transitions to event specific sub-procedures or emergency contingency procedures.

## 2013 NRC exam

From the Clarification Guidance for SRO-only Questions Rev 1 dated 03/11/2010 flowchart for 10 CFR 55.43(b)(5) :
Assessment of facility conditions and selection of appropriate procedures during normal, abnormal, and emergency situations [10 CFR 55.43(b)(5)], involving BOTH:

1) assessing plant conditions and then
2) selecting a procedure or section of a procedure to mitigate, recover, or with which to proceed.

Using the flowchart, this question can:

- NOT be answered solely by knowing "systems knowledge", i.e., how the system works, flowpath, logic, component location.
- NOT be answered solely by knowing immediate operator actions.
- NOT be answered solely by knowing entry conditions for AOPs or plant parameters that require direct entry to major EOPs.
- NOT be answered solely by knowing the purpose, overall sequence of events, or overall mitigative strategy of a procedure. (the second part of the question is major mitigative strategy and meets the K/A. The first part of the question meets the SRO requirement for procedure selection)
- Be answered with knowledge of ONE or MORE of the following:
  - **Assessing plant conditions (normal, abnormal, or emergency) and then selecting a procedure or section of a procedure to mitigate, recover, or with which to proceed.**
  - **Knowledge of diagnostic steps and decision points in the EOPs that involve transitions to event specific sub-procedures or emergency contingency procedures.**

99. WE02EA2.1 099

Unit 1 has tripped from 100% power with the following conditions:

- A Safety Injection occurred after the Reactor Trip due to a Steam Dump malfunction.
- All MSIV's are closed.
- The crew is evaluating SI termination criteria in EEP-0.0, Reactor Trip or Safety Injection.
- The SCMMs indicate 105°F in CETC mode.
- All SG Narrow Range levels are 43% and rising.
- RCS pressure is 1820 psig and slowly rising.
- Pressurizer level is 5% and rising.

Which one of the following describes the required actions regarding SI Termination?

A. Immediately transition to ESP-1.1, SI Termination, to terminate SI flow.

B. Maintain SI flow until PZR level recovers, then transition to ESP-1.2, Post LOCA Cooldown and Depressurization.

C. ✓ Maintain SI flow until PZR level recovers, then terminate SI flow in EEP-0.0, Reactor Trip or Safety Injection.

D. Immediately terminate SI flow in EEP-0, Reactor Trip or Safety Injection, then transition to ESP-1.1, SI Termination.

**EEP-0 Termination step**

**16 Check SI termination criteria.**

| | |
|---|---|
| 16.1 Check SUB COOLED MARGIN MONITOR indication - GREATER THAN 16 F SUBCOOLED IN CETC MODE. | 16.1 Proceed to step 23. |
| 16.2 Check secondary heat sink available.<br>Total feed flow to SGs - GREATER THAN 395 gpm.<br><br>AFW FLOW TO 1A(1B,1C) SG<br>[] FI 3229A<br>[] FI 3229B<br>[] FI 3229C<br>AFW TOTAL FLOW<br>[] FI 3229<br><br>OR<br><br>Narrow range level in at least one SG - GREATER THAN 31%. | 16.2 IF neither condition is satisfied,<br>THEN proceed to step 23. |
| 16.3 Check RCS pressure - STABLE OR RISING. | 16.3 Proceed to step 23. |

1C(1A) LOOP
RCS WR PRESS
[] PI 402A
[] PI 403A

| | |
|---|---|
| 16.4 Check Pressurizer level - GREATER THAN 13%. | 16.4 Perform the following.<br><br>16.4.1 Stabilize RCS pressure to allow Pressurizer level to rise.<br>1A(1B) LOOP<br>SPRAY VLV<br>[] PK 444C adjusted<br>[] PK 444D adjusted<br><br>16.4.2 Return to step 16.1. |

A. Incorrect - In ESP-0.1, as long as you are greater than 4% Pressurizer level, a SI is not required. Plausible since normally there is a transition to ESP-1.1 when SI termination criteria is met in other procedures, and normally SI flow is terminated in ESP-1.1. For the given conditions, ESP-1.1 will be implemented, but after SI flow is actually terminated in EEP-0.

B. Incorrect - Plausible since normally when SI termination criteria is not met, there is a transition to ESP-1.2. In EEP-0, step 21 normal charging flow is being established. At step 21.2.3 RNO a transition to ESP-1.2 exists for the case where Pzr level cannot be maintained 25-50%, then HHSI flow is realigned and ESP-1.2 entered.
For the given conditions, SI termination is **not met** due to Pressurizer level being < 13%. EEP-0 provides an exception to allow Pressurizer level to rise until all SI termination criteria is met, and then terminate SI.

C. Correct - PZR level is less than the required 13%. The RNO action for step 16.4 is to stabilize pressure and allow level to recover (maintain SI flow until level recovers to >13%). SI Termination Criteria will be met in EEP-0 so SI flow will be terminated in this procedure.

D. Incorrect - PZR level is < the required 13%; SI termination criteria is not yet satisfied, so it is incorrect to immediately terminate SI. EEP-0 provides a loop back to allow time for SI flow to refill the Pressurizer, and then if all SI termination criteria is met, terminate SI flow in EEP-0, and transition to ESP-1.1.

K/A: WE02EA2.1 SI Termination
Ability to determine and interpret the following as they apply to the (SI Termination)
(CFR: 43.5 / 45.13)
EA2.1 Facility conditions and selection of appropriate procedures during abnormal and emergency operations.

| | |
|---|---|
| Importance Rating: | 3.3 4.2 |
| Technical Reference: | FNP-1-EEP-0.0, v44.0<br>FNP-1-ESP-1.1, v25 |
| References provided: | None |
| Learning Objective: | ASSESS the facility conditions associated with the (1) EEP-0, Reactor Trip or Safety Injection and (2) ESP-0.0, Rediagnosis and based on that assessment:<br><br>SELECT the appropriate procedures during normal, abnormal and emergency situations. 10CFR55.43 (b) 5<br>DETERMINE if transition to another section of the procedure or to another procedure is required<br>DETERMINE if the critical safety functions are satisfied (OPS-62530A01) |
| Question History: | FNP Bank - 006A2.13 01<br>Same as Harris 2009 NRC Exam |
| K/A match: | The question provides information from plant instrumentation on SI termination criteria while in EEP-0. The candidate has to interpret the information and determine the actions required and the procedure required to perform SI termination actions. |
| SRO justification: | 10 CFR 55.43(b)(5)<br>Assessment of facility conditions and selection of appropriate procedures during normal, abnormal, and emergency situations. [10 CFR 55.43(b)(5)] This 10 CFR 55.43 topic involves both 1) assessing plant conditions (normal, abnormal, or emergency) and then 2) selecting a procedure or section of a procedure to mitigate, recover, or with which to proceed. One area of SRO level knowledge (with respect to selecting a procedure) is knowledge of the content of the procedure versus knowledge of the procedure's overall mitigative strategy or purpose.<br><br>Assessing plant conditions (normal, abnormal, or emergency) and then selecting a procedure or section of a procedure to mitigate, recover, or with which to proceed.<br><br>Knowledge of diagnostic steps and decision points in the EOPs that involve transitions to event specific sub-procedures or emergency contingency procedures. |

2013 NRC exam

From the Clarification Guidance for SRO-only Questions Rev 1 dated 03/11/2010 flowchart for 10 CFR 55.43(b)(5) :

Assessment of facility conditions and selection of appropriate procedures during normal, abnormal, and emergency situations [10 CFR 55.43(b)(5)], involving BOTH:

1) assessing plant conditions and then
2) selecting a procedure or section of a procedure to mitigate, recover, or with which to proceed.

Using the flowchart, this question can:

- NOT be answered solely by knowing "systems knowledge", i.e., how the system works, flowpath, logic, component location.
- NOT be answered solely by knowing immediate operator actions.
- NOT be answered solely by knowing entry conditions for AOPs or plant parameters that require direct entry to major EOPs.
- NOT be answered solely by knowing the purpose, overall sequence of events, or overall mitigative strategy of a procedure.
- Be answered with knowledge of ONE or MORE of the following:
  - **Assessing plant conditions (normal, abnormal, or emergency) and then selecting a procedure or section of a procedure to mitigate, recover, or with which to proceed.**
  - Knowledge of when to implement attachments and appendices, including how to coordinate these items with procedure steps.
  - **Knowledge of diagnostic steps and decision points in the EOPs that involve transitions to event specific sub-procedures or emergency contingency procedures.**

100. WE06EG2.1.27 100

A LOCA has occurred on Unit 1 with the following conditions:

- There has been **no** HHSI or LHSI flow for an extended period of time.
- ESP-1.2, Post LOCA Cooldown and Depressurization, was in progress when conditions required a transition to FRP-C.2, Response to Degraded Core Cooling.
- A SG depressurization is in progress per FRP-C.2.

Subsequently, core cooling is re-established:

- 1A RHR pump is started.
- LHSI flow is 1800 gpm.

Which one of the following completes the statements below?

The SG depressurization is performed at _(1)_ per FRP-C.2.

Once the SG depressurization is complete and core cooling is re-established, a transition will be made to __(2)_.

A. 1) a maximum attainable rate

2) EEP-1.0, Loss of Reactor or Secondary Coolant

B. ✔ 1) <100°F/hour cooldown rate

2) EEP-1.0, Loss of Reactor or Secondary Coolant

C. 1) a maximum attainable rate

2) ESP-1.2, Post LOCA Cooldown and Depressurization

D. 1) <100°F/hour cooldown rate

2) ESP-1.2, Post LOCA Cooldown and Depressurization

A. Incorrect 1) Incorrect, plausible because this is the action that would be performed in FRP-C.1.

2) Correct, for the conditions given, a transition is made to EEP-1 after core cooling is re-established and the SG depressurization is complete.

B. Correct 1) Correct, this is the required cooldown rate for FRP-C.2.

2) Correct, see A.2.

C. Incorrect 1) Incorrect, see A.1.

2) Incorrect, plausible since before a cooldown is performed in FRP-C.2, if conditions are met at step 8.3, an exit to "the procedure and step in effect" would be performed, and the procedure previously in effect was ESP-1.2.

D. Incorrect 1) Correct, see B.1.

2) Incorrect, see C.2.

K/A: WE06EG2.1.27 Degraded Core Cooling
Knowledge of system purpose and/or function.
(CFR: 41.7)
IMPORTANCE RO 3.9 SRO 4.0

Importance Rating: 3.9 4.0

Technical Reference: FNP-1-FRP-C.2, v18

References provided: None

Learning Objective: ASSESS the facility conditions associated with the (1) FRP-C.1, Response to Inadequate Core Cooling; (2) FRP-C.2, Response to Degraded Core Cooling; (3) FRP-C.3, Response to Saturated Core Cooling, and based on that assessment: (OPS-62533C01)

• SELECT the appropriate procedures during normal, abnormal and emergency situations. 10CFR55.43 (b) 5
• DETERMINE if transition to another section of the procedure or to another procedure is required
• DETERMINE if the critical safety functions are satisfied

Question History: New question

K/A match: The K/A requires a knowledge of the function of actions taken during a Degraded Core cooling scenario (WE06). The candidate is questioned on the procedural actions taken to perform a SG depressurization as it relates to how the depressurization is performed (to cooldown and

depressurize the RCS at <100°F/hr). In addition, knowledge of the procedurally directed transition is required.

SRO justification: 10 CFR 55.43(b)(5)
Assessment of facility conditions and selection of appropriate procedures during normal, abnormal, and emergency situations. [10 CFR 55.43(b)(5)] This 10 CFR 55.43 topic involves both 1) assessing plant conditions (normal, abnormal, or emergency) and then 2) selecting a procedure or section of a procedure to mitigate, recover, or with which to proceed. One area of SRO level knowledge (with respect to selecting a procedure) is knowledge of the content of the procedure versus knowledge of the procedure's overall mitigative strategy or purpose.

Assessing plant conditions (normal, abnormal, or emergency) and then selecting a procedure or section of a procedure to mitigate, recover, or with which to proceed.

Knowledge of diagnostic steps and decision points in the EOPs that involve transitions to event specific sub-procedures or emergency contingency procedures.

## 2013 NRC exam

From the Clarification Guidance for SRO-only Questions Rev 1 dated 03/11/2010 flowchart for 10 CFR 55.43(b)(5) :
Assessment of facility conditions and selection of appropriate procedures during normal, abnormal, and emergency situations [10 CFR 55.43(b)(5)], involving BOTH:

1) assessing plant conditions and then
2) selecting a procedure or section of a procedure to mitigate, recover, or with which to proceed.

Using the flowchart, this question can:

- NOT be answered solely by knowing "systems knowledge", i.e., how the system works, flowpath, logic, component location.
- NOT be answered solely by knowing immediate operator actions.
- NOT be answered solely by knowing entry conditions for AOPs or plant parameters that require direct entry to major EOPs.
- NOT be answered solely by knowing the purpose, overall sequence of events, or overall mitigative strategy of a procedure.
- Be answered with knowledge of ONE or MORE of the following:
  - **Assessing plant conditions (normal, abnormal, or emergency) and then selecting a procedure or section of a procedure to mitigate, recover, or with which to proceed.**
  - Knowledge of when to implement attachments and appendices, including how to coordinate these items with procedure steps.
  - **Knowledge of diagnostic steps and decision points in the EOPs that involve transitions to event specific sub-procedures or emergency contingency procedures.**

# REFERENCES

| Step | Action/Expected Response | Response Not Obtained |
|---|---|---|
| | 34.2 [CA] WHEN one of the following conditions occur,<br>THEN stop the RCS pressure reduction.<br><br>[ ] RCS pressure is less than affected SG pressure, AND pressurizer level greater than 15%.<br><br>OR<br><br>[ ] Pressurizer level greater than 63%.<br><br>OR<br><br>[ ] SUBCOOLED MARGIN MONITOR indication less than 16°F subcooled in CETC mode. | |

**SS2** - Failure of Reactor Protection System Instrumentation to Complete or Initiate an Automatic Reactor Trip Once a Reactor Protection System Setpoint Has Been Exceeded **AND** Manual Trip Was NOT Successful. (pg. 45)

**SA2** - Failure of Reactor Protection System Instrumentation to Complete or Initiate an Automatic Reactor Trip Once a Reactor Protection System Setpoint Has Been Exceeded **AND** Manual Trip Was Successful. (pg. 50)

## 3.8 ELECTRICAL POWER SYSTEMS

### 3.8.1 AC Sources — Operating

LCO 3.8.1 The following AC electrical sources shall be OPERABLE:

a. Two qualified circuits between the offsite transmission network and the onsite Class 1E AC Electrical Power Distribution System; and

b. Two diesel generator (DG) sets capable of supplying the onsite Class 1E power distribution subsystem(s); and

c. Automatic load sequencers for Train A and Train B.

APPLICABILITY: MODES 1, 2, 3, and 4.

ACTIONS

----------NOTE----------
LCO 3.0.4b is not applicable to DGs.
---

| CONDITION | REQUIRED ACTION | COMPLETION TIME |
|---|---|---|
| A. One required offsite circuit inoperable. | A.1 Perform SR 3.8.1.1 for required OPERABLE offsite circuit. | 2 hours<br><br>AND<br><br>Once per 8 hours thereafter |
| | AND | |
| | A.2 Declare required feature(s) with no offsite power available inoperable when its redundant required feature(s) is inoperable. | 24 hours from discovery of no offsite power to one train concurrent with inoperability of redundant required feature(s) |
| | AND | |
| | | (continued) |

ACTIONS

| CONDITION | REQUIRED ACTION | COMPLETION TIME |
|---|---|---|
| A. (continued) | A.3 Restore required offsite circuit to OPERABLE status. | 72 hours<br><br>AND<br><br>13 days from discovery of failure to meet LCO |
| B. One DG set inoperable. | ----------NOTE----------<br>LCO 3.0.4c is applicable when only one of the three DGs is inoperable.<br>---------- | |
| | B.1 Perform SR 3.8.1.1 for the required offsite circuit(s). | 2 hours<br><br>AND<br><br>Once per 8 hours thereafter |
| | AND | |
| | B.2 Declare required feature(s) supported by the inoperable DG set inoperable when its required redundant feature(s) is inoperable. | 4 hours from discovery of Condition B concurrent with inoperability of redundant required feature(s) |
| | AND | |
| | B.3.1 Determine OPERABLE DG set is not inoperable due to common cause failure. | 24 hours |
| | OR | |
| | | (continued) |

ACTIONS

| CONDITION | REQUIRED ACTION | | COMPLETION TIME |
|---|---|---|---|
| B. (continued) | B.3.2 | Perform SR 3.8.1.6 for OPERABLE DG set. | 24 hours |
| | AND | | |
| | B.4 | Restore DG set to OPERABLE status. | 10 days<br>AND<br>13 days from discovery of failure to meet LCO |

## 3.8 ELECTRICAL POWER SYSTEMS

### 3.8.4 DC Sources — Operating

LCO 3.8.4 The Train A and Train B Auxiliary Building and Service Water Intake Structure (SWIS) DC electrical power subsystems shall be OPERABLE.

APPLICABILITY: MODES 1, 2, 3, and 4.

ACTIONS

| CONDITION | REQUIRED ACTION | COMPLETION TIME |
|---|---|---|
| A. One Auxiliary Building DC electrical power subsystem inoperable. | A.1 Restore the Auxiliary Building DC electrical power subsystem to OPERABLE status. | 2 hours |
| B. One Auxiliary Building DC electrical power subsystem with battery connection resistance not within limit. | B.1 Restore the battery connection resistance to within limit. | 24 hours |
| C. Required Action and associated Completion Time of Condition A or B not met. | C.1 Be in MODE 3.<br><br>AND<br><br>C.2 Be in MODE 5. | 6 hours<br><br><br><br>36 hours |
| D. One required SWIS DC electrical power subsystem battery connection resistance not within limit. | D.1 Restore the battery connection resistance to within the limit. | 24 hours |
| E. One required SWIS DC electrical power subsystem inoperable.<br>OR<br>Required Action and associated Completion Time of Condition D not met. | E.1 Declare the associated Service Water System train inoperable. | Immediately |

## 3.8 ELECTRICAL POWER SYSTEMS

### 3.8.9 Distribution Systems — Operating

LCO 3.8.9 Train A and Train B AC, DC, and AC vital bus electrical power distribution subsystems shall be OPERABLE.

APPLICABILITY: MODES 1, 2, 3, and 4.

ACTIONS

| CONDITION | REQUIRED ACTION | COMPLETION TIME |
|---|---|---|
| A. One or more AC electrical power distribution subsystems inoperable. | A.1 Restore AC electrical power distribution subsystem(s) to OPERABLE status. | 8 hours<br><br><u>AND</u><br><br>16 hours from discovery of failure to meet LCO |
| B. One or more AC vital buses inoperable. | B.1 Restore AC vital bus subsystem(s) to OPERABLE status. | 8 hours<br><br><u>AND</u><br><br>16 hours from discovery of failure to meet LCO |
| C. One Auxiliary Building DC electrical power distribution subsystem inoperable. | C.1 Restore Auxiliary Building DC electrical power distribution subsystem to OPERABLE status. | 2 hours<br><br><u>AND</u><br><br>16 hours from discovery of failure to meet LCO |

ACTIONS

| CONDITION | REQUIRED ACTION | COMPLETION TIME |
|---|---|---|
| D. Required Action and associated Completion Time of Condition A, B, or C not met. | D.1 Be in MODE 3.<br><br>AND<br><br>D.2 Be in MODE 5. | 6 hours<br><br><br><br>36 hours |
| E. One Service Water Intake Structure (SWIS) DC electrical power distribution subsystem inoperable. | E.1 Declare the associated Service Water train inoperable. | Immediately |
| F. Two trains with inoperable distribution subsystems that result in a loss of safety function. | F.1 Enter LCO 3.0.3. | Immediately |

**Table 3-1** Radioactive Gaseous Effluent Monitoring Instrumentation

| Instrument | OPERABILITY Requirements[b] | | |
|---|---|---|---|
| | Minimum Channels OPERABLE | Applicability | ACTION |
| 1. Steam Jet Air Ejector<br><br>Noble Gas Activity Monitor (RE-15) | 1 | MODES 1,2,3,4 | 37 |
| 2. Plant Vent Stack<br><br>a. Noble Gas Activity Monitor (RE-14 or RE-22) | 1 | At all times | 37[a] |
| b. Iodine Sampler | 1 | At all times | 39 |
| c Particulate Sampler | 1 | At all times | 39 |
| d. Flowrate Monitor | 1 | At all times | 36 |
| 3. GASEOUS RADWASTE TREATMENT SYSTEM<br><br>Noble Gas Activity Monitor (RE-14), with Alarm and Automatic Termination of Release | 1 | At all times | 35 |

a. For continuous releases.

b. All requirements in this table apply to each unit.

**Table 3-1** (contd) Notation for Table 3-1 – ACTION Statements

ACTION 35 - With the number of channels OPERABLE less than required by the Minimum Channels OPERABLE requirement, the contents of the tank(s) may be released to the environment provided that prior to initiating the release:

a. At least two independent samples of the tank's contents are analyzed, and

b. At least two technically qualified members of the Facility Staff independently verify the discharge line valving, and

(1) Verify the manual portion of the computer input for the release rate calculations performed on the computer, or

(2) Verify the entire release rate calculations if such calculations are performed manually.

Otherwise, suspend release of radioactive effluents via this pathway.

ACTION 36 - With the number of channels OPERABLE less than required by the Minimum Channels OPERABLE requirement, effluent releases via this pathway may continue provided the flowrate is estimated at least once per 4 hours.

ACTION 37 - With the number of channels OPERABLE less than required by the Minimum Channels OPERABLE requirement, effluent releases via this pathway may continue provided grab samples are taken at least once per 8 hours and these samples are analyzed for gross activity within 24 hours.

ACTION 39 - With the number of channels OPERABLE less than required by the Minimum Channels OPERABLE requirement, effluent releases via the affected pathway may continue provided samples are continuously collected with auxiliary sampling equipment as required in Table 3-3.

# ANSWER KEY REPORT

for ILT-36 SRO NRC Exam Test Form: 0

| # | ID | Points | Answers 0 |
|---|---|---|---|
| 1 | 001AA2.01 1 | 1.00 | C |
| 2 | 003A3.05 2 | 1.00 | C |
| 3 | 004K3.08 3 | 1.00 | C |
| 4 | 005A2.02 4 | 1.00 | B |
| 5 | 006K5.06 5 | 1.00 | B |
| 6 | 006K6.18 6 | 1.00 | B |
| 7 | 007EA2.06 7 | 1.00 | C |
| 8 | 007K5.02 8 | 1.00 | B |
| 9 | 008AK1.01 9 | 1.00 | D |
| 10 | 008K2.02 10 | 1.00 | D |
| 11 | 009EK2.03 11 | 1.00 | C |
| 12 | 010A2.01 12 | 1.00 | B |
| 13 | 011EK2.02 13 | 1.00 | D |
| 14 | 011K2.02 14 | 1.00 | C |
| 15 | 012A4.06 15 | 1.00 | A |
| 16 | 013G2.1.19 16 | 1.00 | A |
| | 013G2.1.19 P 16 | | |
| 17 | 014K5.01 17 | 1.00 | D |
| 18 | 015/17AA2.02 18 | 1.00 | A |
| 19 | 017K6.01 19 | 1.00 | D |
| 20 | 022A1.03 20 | 1.00 | B |
| 21 | 022AK1.04 21 | 1.00 | A |
| 22 | 022K4.03 22 | 1.00 | A |
| 23 | 025AA1.01 23 | 1.00 | D |
| 24 | 026AG2.4.50 24 | 1.00 | D |
| 25 | 026K2.01 25 | 1.00 | C |
| 26 | 029A1.02 26 | 1.00 | A |
| 27 | 033K4.05 27 | 1.00 | C |
| 28 | 035A2.01 28 | 1.00 | B |
| 29 | 036AG2.1.7 29 | 1.00 | D |
| 30 | 037AK1.01 30 | 1.00 | C |
| 31 | 038EK3.02 31 | 1.00 | C |
| 32 | 039K1.09 32 | 1.00 | A |
| 33 | 045K1.19 33 | 1.00 | B |
| 34 | 051AK3.01 34 | 1.00 | A |
| 35 | 054AA2.05 35 | 1.00 | C |
| 36 | 055A3.03 36 | 1.00 | C |
| 37 | 056AK3.02 37 | 1.00 | A |
| 38 | 059A4.01 38 | 1.00 | A |
| 39 | 059AK2.01 39 | 1.00 | B |
| 40 | 059G2.2.44 40 | 1.00 | B |
| 41 | 061A3.01 41 | 1.00 | A |
| 42 | 061K5.01 42 | 1.00 | A |
| 43 | 062AA1.07 43 | 1.00 | A |
| 44 | 062K3.01 44 | 1.00 | B |
| 45 | 063A1.01 45 | 1.00 | A |
| 46 | 064K3.02 46 | 1.00 | D |
| 47 | 064K6.07 47 | 1.00 | D |

# ANSWER KEY REPORT

for ILT-36 SRO NRC Exam Test Form: 0

| # | ID | Points | Answers 0 |
|---|---|---|---|
| 48 | 065AG2.4.11 48 | 1.00 | C |
| 49 | 068AK2.07 49 | 1.00 | D |
| 50 | 071K3.05 50 | 1.00 | A |
| 51 | 073A2.02 51 | 1.00 | B |
| 52 | 073G2.2.42 52 | 1.00 | B |
| 53 | 076AA1.04 53 | 1.00 | B |
| 54 | 076K2.08 54 | 1.00 | C |
| 55 | 076K4.03 55 | 1.00 | D |
| 56 | 077AK3.02 56 | 1.00 | A |
| 57 | 078K1.01 57 | 1.00 | A |
| 58 | 079G2.4.34 58 | 1.00 | D |
| 59 | 103K4.06 59 | 1.00 | C |
| 60 | G2.1.18 60 | 1.00 | C |
| 61 | G2.1.5 61 | 1.00 | B |
| 62 | G2.2.20 62 | 1.00 | C |
| 63 | G2.2.25 63 | 1.00 | A |
| 64 | G2.3.12 64 | 1.00 | C |
| 65 | G2.3.13 65 | 1.00 | B |
| 66 | G2.3.4 66 | 1.00 | C |
| 67 | G2.4.20 67 | 1.00 | D |
| 68 | G2.4.23 68 | 1.00 | A |
| 69 | G2.4.29 69 | 1.00 | D |
| 70 | W/E04EA1.1 70 | 1.00 | C |
| 71 | W/E05EG2.4.2 71 | 1.00 | B |
| 72 | W/E08EG2.4.6 72 | 1.00 | D |
| 73 | W/E11EK2.1 73 | 1.00 | C |
| 74 | W/E12EK1.1 74 | 1.00 | B |
| 75 | W/E15EA1.3 75 | 1.00 | A |
| **SECTION 1 ( 75 items)** | | **75.00** | |

| | | | |
|---|---|---|---|
| 76 | 001A2.17 76 | 1.00 | C |
| 77 | 004A2.02 77 | 1.00 | A |
| 78 | 006G2.2.22 78 | 1.00 | B |
| 79 | 008AG2.2.22 79 | 1.00 | A |
| 80 | 024AA2.04 80 | 1.00 | B |
| 81 | 028G2.1.1 81 | 1.00 | B |
| 82 | 029EA2.04 82 | 1.00 | D |
| 83 | 051AG2.1.7 83 | 1.00 | A |
| 84 | 054AA2.01 84 | 1.00 | C |
| 85 | 055EG2.2.12 85 | 1.00 | D |
| 86 | 058AA2.02 86 | 1.00 | B |
| 87 | 059A2.12 87 | 1.00 | C |
| 88 | 064G2.2.44 88 | 1.00 | B |
| 89 | 071G2.2.25 89 | 1.00 | D |
| 90 | 073A2.01 90 | 1.00 | A |
| 91 | 077AG2.4.31 91 | 1.00 | C |
| 92 | G2.1.20 92 | 1.00 | D |

# ANSWER KEY REPORT

for ILT-36 SRO NRC Exam Test Form: 0

| # | ID | Points | Answers 0 |
|---|---|---|---|
| 93 | G2.1.37 93 | 1.00 | A |
| 94 | G2.2.21 94 | 1.00 | B |
| 95 | G2.2.23 95 | 1.00 | A |
| 96 | G2.3.14 96 | 1.00 | D |
| 97 | G2.3.6 97 | 1.00 | C |
| 98 | G2.4.6 98 | 1.00 | D |
| 99 | WE02EA2.1 99 | 1.00 | C |
| 100 | WE06EG2.1.27 100 | 1.00 | B |
| **SECTION BREAK ( 25 items)** | | **25.00** | |