U.S. EPR
Byron Bulletin Response

George Pannell & Brandon Meier, P.E.
Rockville, MD - 19 June 2013

EPR™ by AREVA

AREVA

Objective

- **Develop a Conceptual Design Solution for the U.S. EPR Electrical System which will Adequately Address NRC Bulletin 2012-01: Design Vulnerability in Electric Power System**

Agenda

- Overview of Byron Event
- Licensing Strategy
- Overview of U.S. EPR Offsite Power Supply Design for the Emergency Auxiliary Transformers (EATs)
- Analysis of the U.S. EPR Electrical System with Loss of a Single Phase of One of the Off-Site Power Supplies to the EATs
- Conceptual Design Solution for the Response to NRC Bulletin 2012-01
- Summary
- Actions Going Forward

U.S. EPR™ Byron Event Basic Overview

Unit 2

January 30, 2012

- Mechanical failure of 345 kV under-hung porcelain insulator on System Auxiliary Transformer (SAT) A-frame structure creates a line to ground fault on the feed side of the SAT
- Open phase condition that protective relaying was not designed to detect
- Simultaneous adverse impact on both redundant safety trains
- Reactor trip on Reactor Coolant Pump (RCP) under voltage
- Loss of off-site power (LOOP)
- Unusual Event

Unit 1

February 28, 2012

- Mechanical failure of under-hung porcelain insulator on SAT A-frame structure creating a line to ground fault on the system side
- Protective relaying isolated the faulted component and transferred power to the alternate supply
- Systems worked as designed and station remained on-line
- Loss of off-site power (LOOP)
- Unusual Event

Licensing Strategy

- Describe Compliance to GDC 17 of the Existing U.S EPR Off-Site Power Supply Design Including the Emergency Auxiliary Transformers (EATs)
- Describe the Analysis Performed to Evaluate Electrical System Behavior Due to the Loss of a Single Phase in One of the Off-Site Power Feeds to the EATs
- Present Electrical System Analysis Results and Associated Design/Procedural/Training Recommendations
- Present Conceptual Design Solution - Licensing Position Argument Will Support a Non-Safety Related Electrical System Design

Licensing Strategy (cont.)

- Commit to Monitoring Ongoing Operating Experience (OE) of the NRC Bulletin 2012-01 Related Designs Implemented in the U.S. and if Applicable, the Worldwide Operating Fleet
- Commit to Application of Industry Lessons Learned Into the Detail Design Solution for the U.S. EPR
- An ITAAC will be created to verify that the final design meets Functional Acceptance Criteria thereby providing conformance with GDC 17 for Off-site Power

Overview U.S. EPR Offsite Power Supply Design for the EATs

- A minimum of two offsite circuits are provided to the switchyard, per GDC 17.
- The secondary side of the Main Step-Up transformer feeds into the switchyard.
- Each EAT has its own 500KV feed from the switchyard.
- The Emergency Power Supply System (EPSS) buses are supplied from the EATs.
- Each EAT is sized to handle the load of all four EPSS divisions. During normal operation the EAT secondary winding supplies one EPSS division and the tertiary winding supplies another EPSS division. Likewise, the other EAT supplies the remaining two EPSS divisions.

Overview U.S. EPR Offsite Power Supply Design for the EATs (continued)

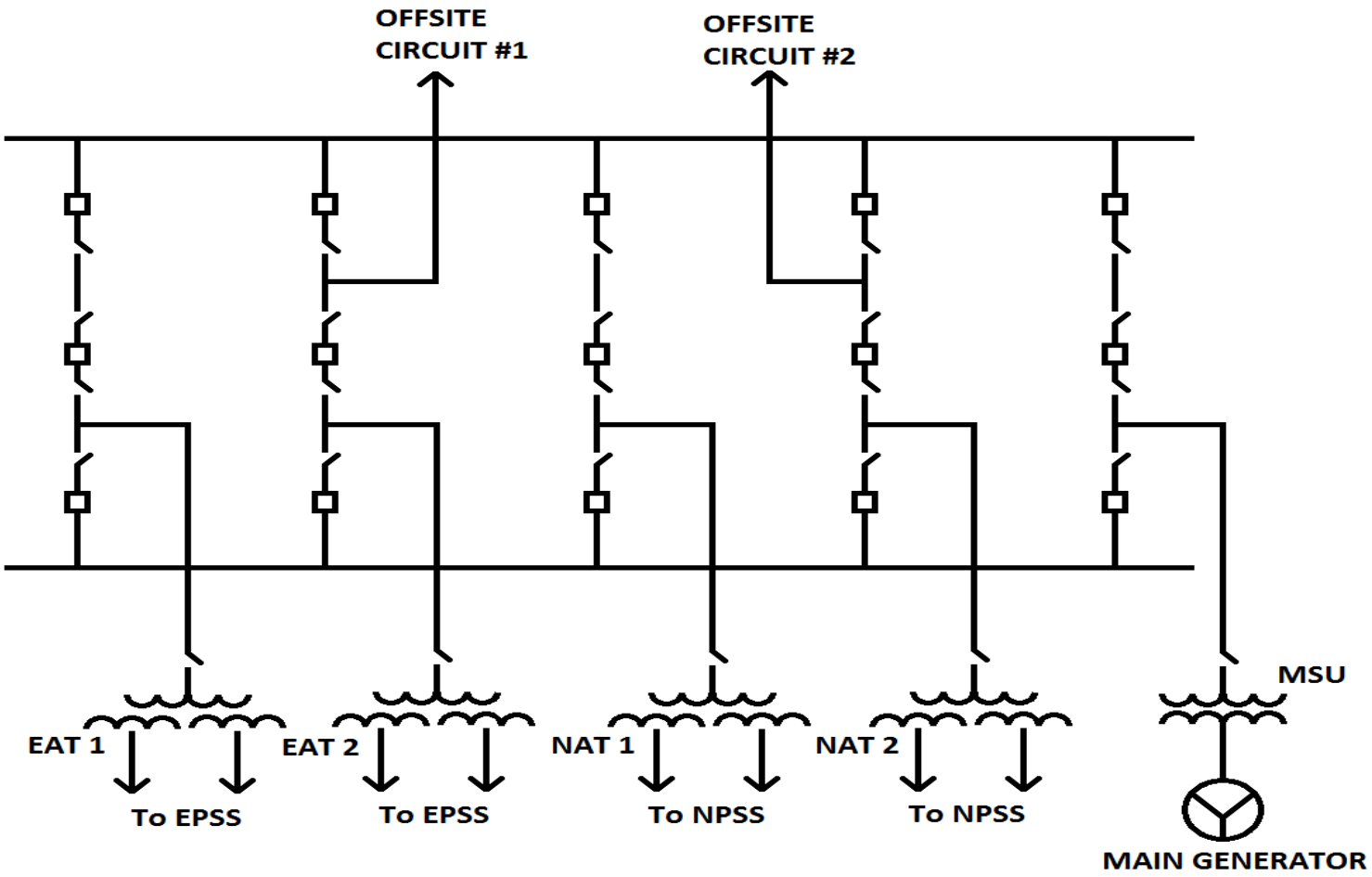

Key Inputs and Assumptions for the Analysis

- Plant Loads are in steady state.
- One EAT is modeled to demonstrate the analysis methodology; the analysis will be applied to the other EAT during Detailed Design of the U.S. EPR.
- Maximum load condition on the EATs is assuming a single EAT powers all four Emergency Power Supply System (EPSS) buses (31-34BDA) with accident loads operating.
- Minimum load condition on the EATs is assuming the other EAT is carrying the major process system load (e.g., CCW, ESW, SCWS, etc.).

Key Inputs and Assumptions for the Analysis

- The offsite grid connections are modeled using the minimum and maximum short circuit contribution used for the U.S. EPR design certification ETAP load flow model.
- Since the EATs/NATs utilize an OLTC on the primary side, the three-winding EATs/NATs are effectively two two-winding transformers in a single enclosure.

Overview of Analysis

- A model has been created using ETAP Version 12.0N with guidance from NEI's Consideration of Scenarios for the Open Phase Analysis (Draft 5).
- The model consists of a single EAT with consideration given to loading on the EAT and the impacts of the offsite power sources.
- The static model is used for the U.S. EPR.
- The Phase, Sequence, and Percent Unbalance has been analyzed for voltage and current on the high-side of the EAT.

Overview of Analysis Results

- **<u>Ground-Fault (e.g., solid or high-impedance)</u>: The analysis shows the presence of high current on the high-side of the EATs, when compared to minimum and maximum load.**
  - **The U.S. EPR will consider single line-to-ground faults when performing normal overcurrent protection/coordination studies.**
- **<u>Open-Phase, High-Side Impact</u>: The analysis performed indicates that a ratio of zero sequence voltage to zero sequence current (V0/I0) is a potential parameter which is characteristic of an open-phase on the high-side of the EATs.**
  - **For the U.S. EPR, the sequence components of the current and voltage will be analyzed further for telling signatures of an open-phase on the high-side of the EATs.**
- **<u>Open-Phase, Low-Side Impact</u>: Preliminary analyses indicate the U.S. EPR degraded grid logic is likely to be initiated on the low-side EPSS buses (31-34BDA), when an open-phase occurs on the EAT high-side.**

Overview of Conceptual Design for U.S. EPR

- **The high-side of the EATs will have instrument transformers installed which will provide input to digital relays.**
  - **During Detailed Design, lines of communication will be set up between the relaying protective zones to ensure coordination is maintained.**
- **Commercially available digital protective relaying will be incorporated into the design.**
  - **The selection of the relay will be completed during Detailed Design for the U.S. EPR. There are a number of companies that offer digital protective relays that can perform this function (such as ABB, Basler, GE, SEL, etc.).**
- **Voltage and current results from ETAP analyses will be used to assess system conditions that are indicative of an open-phase and/or ground faults (e.g., solid or high-impedance).**

Overview of Conceptual Design for U.S. EPR

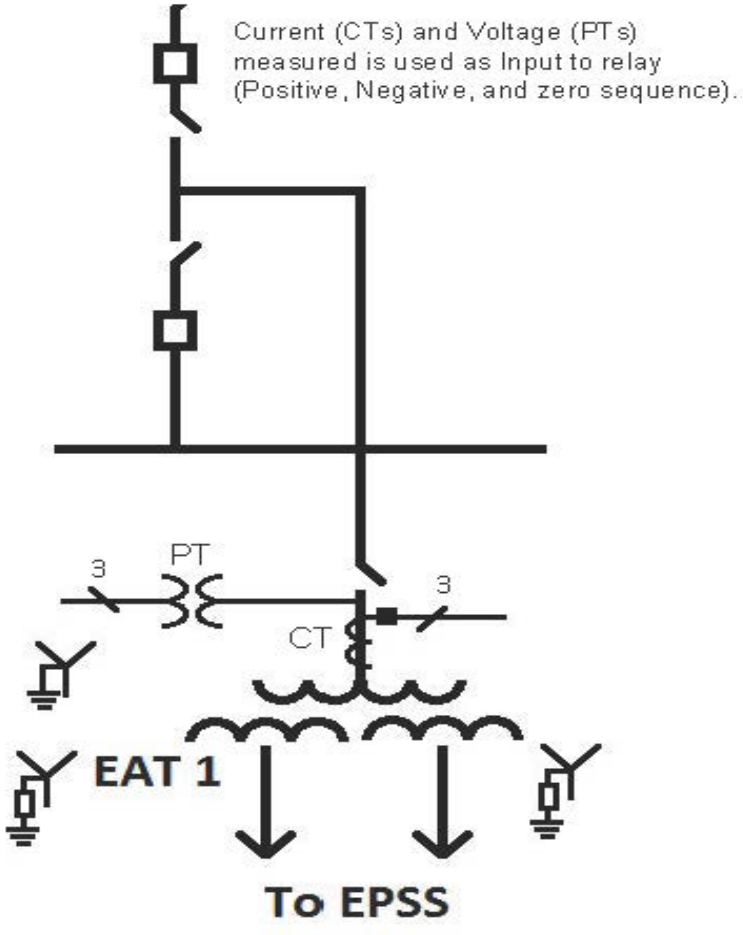

Overview of Conceptual Design for U.S. EPR

- The monitoring system will initiate the appropriate alarms to notify plant personnel in the control room of the faulted condition and it will also provide phase voltage indication in the control room for operator use to verify operability of off-site power.
- The monitoring system will incorporate design features that provide the capability to easily interface with electrical system breakers for future implementation of trip functions if it can be determined that the reliability of off-site power will not be degraded.

Summary

- The event described in NRC Bulletin 2012-01 is well understood.
- AREVA is committing to the design of an off-site power supply monitoring system.
- AREVA has developed a conceptual design for the monitoring system to be incorporated into the U.S. EPR electrical system detailed design.
- The monitoring system will use commercially available digital relays, ETAP system analysis will be used for proof of concept.
- The system will provide alarm and voltage information in the control room with design provisions for future breaker tripping if it can be shown that off-site power reliability is not degraded by implementing such a feature.

Actions Going Forward

- AREVA will attend the June 27, 2013 NEI industry meeting on NRC Bulletin 2012-01.
- NRC Bulletin 2012-01, RAI 564 Question 8.02-8 Response will be submitted by 6/28/2013.
- The Off-site Power - Phase Monitoring System design will be implemented in the U.S. EPR DCD and incorporated by reference in the COLA.
- The DCD design will provide the conceptual design for the offsite monitoring system alarm function for offsite power.
- The COLA applicant will integrate the response to off-normal offsite power condition alarms into the appropriate site procedures.