MITSUBISHI HEAVY INDUSTRIES, LTD.
16-5, KONAN 2-CHOME, MINATO-KU
TOKYO, JAPAN

June 17, 2013

Document Control Desk
U.S. Nuclear Regulatory Commission
Washington, DC 20555-0001

Attention: Mr. Jeffrey A. Ciocco

Docket No. 52-021
MHI Ref: UAP-HF-13137

Subject: MHI's Response to US-APWR DCD RAI No. 988-7021 (SRP 07.08)

Reference: 1) "Request for Additional Information No. 988-7021, SRP Section: 07.08 – Diverse Instrumentation and Control Systems – Application Section: MUAP-07014 (Rev 5) - D3 Coping Analysis", dated January 29, 2013.

With this letter, Mitsubishi Heavy Industries, Ltd. ("MHI") transmits to the U.S. Nuclear Regulatory Commission ("NRC") the document entitled "MHI's Response to US-APWR DCD RAI No. 988-7021 (SRP 07.08)."

Enclosed is the response to the five RAI questions contained within Reference 1.

As indicated in the enclosed materials, this document contains information that MHI considers proprietary, and therefore should be withheld from public disclosure pursuant to 10 C.F.R. § 2.390 (a)(4) as trade secrets and commercial or financial information which is privileged or confidential. A non-proprietary version of the document is also being submitted with the information identified as proprietary redacted and replaced by the designation "[ ]".

This letter includes a copy of the proprietary version of the RAI response (Enclosure 2), a copy of the non-proprietary version of the RAI response (Enclosure 3), and the Affidavit of Yoshiki Ogata (Enclosure 1) which identifies the reasons MHI respectfully requests that all material designated as "Proprietary" in Enclosure 2 be withheld from disclosure pursuant to 10 C.F.R. § 2.390 (a)(4).

Please contact Mr. Joseph Tapia, General Manager of Licensing Department, Mitsubishi Nuclear Energy Systems, Inc., if the NRC has questions concerning any aspect of this submittal. His contact information is provided below.

Sincerely,

Y. Ogata

Yoshiki Ogata
Executive Vice President
Mitsubishi Nuclear Energy Systems, Inc.
On behalf of Mitsubishi Heavy Industries, LTD.

D081
NRO

Enclosures:

1. Affidavit of Yoshiki Ogata
2. MHI's Response to US-APWR DCD RAI No. 988-7021 (SRP 07.08) (proprietary)
3. MHI's Response to US-APWR DCD RAI No. 988-7021 (SRP 07.08) (non-proprietary)

CC: J. A. Ciocco
J. Tapia

Contact Information

Joseph Tapia, General Manager of Licensing Department
Mitsubishi Nuclear Energy Systems, Inc.
1001 19th Street North, Suite 710
Arlington, VA 22209
E-mail: joseph_tapia@mnes-us.com
Telephone: (703) 908-8055

ENCLOSURE 1

Docket No. 52-021
MHI Ref: UAP-HF-13137

MITSUBISHI HEAVY INDUSTRIES, LTD.

AFFIDAVIT

I, Yoshiki Ogata, being duly sworn according to law, depose and state as follows:

1. I am Executive Vice President of Mitsubishi Nuclear Energy Systems, Inc., and have been delegated the function of reviewing MITSUBISHI HEAVY INDUSTRIES, LTD's ("MHI") US-APWR documentation to determine whether it contains information that should be withheld from public disclosure pursuant to 10 C.F.R. § 2.390 (a)(4) as trade secrets and commercial or financial information which is privileged or confidential.

2. In accordance with my responsibilities, I have reviewed the enclosed document entitled "MHI's Response to US-APWR DCD RAI No. 988-7021 (SRP 07.08)", dated June 17, 2013, and have determined that the document contains proprietary information that should be withheld from public disclosure. Those pages containing proprietary information are identified with the label "Proprietary" on the top of the page and the proprietary information has been bracketed with an open and closed bracket as shown here "[ ]". The first page of the document indicates that information identified as "Proprietary" should be withheld from public disclosure pursuant to 10 C.F.R. § 2.390 (a)(4).

3. The information identified as proprietary in the enclosed documents have in the past been, and will continue to be, held in confidence by MHI and its disclosure outside the company is limited to regulatory bodies, customers and potential customers, and their agents, suppliers, and licensees, and others with a legitimate need for the information, and is always subject to suitable measures to protect it from unauthorized use or disclosure.

4. The basis for holding the referenced information confidential is that is describes the unique design approach for the Defense-in-Depth and Diversity ("D3") of the Instrumentation and Control ("I&C") system and the unique post-accident response of the US-APWR crediting design features for D3, developed by MHI and not used in the exact form by any of MHI's competitors. This information was developed at significant cost to MHI, since it required the performance of Research and Development, detailed design for its software and hardware extending over several years.

5. The referenced information is being furnished to the Nuclear Regulatory Commission ("NRC") in confidence and solely for the purpose of supporting the NRC staff's review of MHI's application for certification of its US-APWR Standard Plant Design.

6. The referenced information is not available in public sources and could not be gathered readily from other publicly available information. Other than through the provisions in paragraph 3 above, MHI knows of no way the information could be lawfully acquired by organizations or individuals outside of MHI.

7. Public disclosure of the referenced information would assist competitors of MHI in their design of new nuclear power plants without incurring the costs or risks associated with the design and testing of the subject systems. Therefore, disclosure of the information

identified as proprietary would have the following negative impacts on the competitive position of MHI in the U.S. nuclear plant market:

A. Loss of competitive advantage due to the costs associated with development of the D3 approach for the I&C system and the post-accident plant response of the US-APWR to the design features for D3. Providing public access to such information permits competitors to duplicate or mimic the D3 design approach without incurring the associated costs.

B. Loss of competitive advantage of the US-APWR created by benefits of enhanced plant safety, and reduced operation and maintenance costs associated with the D3 approach.

I declare under penalty of perjury that the foregoing affidavit and the matters stated therein are true and correct to the best of my knowledge, information, and belief.

Executed on this 17th day of June, 2013.

Y. Ogata

Yoshiki Ogata
Executive Vice President
Mitsubishi Nuclear Energy Systems, Inc.

ENCLOSURE 3

UAP-HF-13137
Docket No. 52-021

MHI's Response to US-APWR DCD RAI No. 988-7021 (SRP 07.08)

June 2013

(Non-Proprietary)

RESPONSE TO REQUEST FOR ADDITIONAL INFORMATION

06/13/2013

US-APWR Design Certification

Mitsubishi Heavy Industries

Docket No. 52-021

RAI NO.:	**NO. 988-7021**
SRP SECTION:	**07.08 - DIVERSEINSTRUMENTATION AND CONTROL SYSTEMS**
APPLICATION SECTION:	**MUAP-07014 (REV 5) - D3 COPING ANALYSIS**
DATE OF RAI ISSUE:	**01/29/2013**

QUESTION NO. :07.08-26

BTP 7-19, Rev 5, acceptance criteria states that for AOO/PA events occurring in conjunction with each single postulated CCF, the plant response calculated using best-estimate analyses should not result in radiation release exceeding 10 percent of the 10 CFR 100 guideline value or violation of the integrity of the primary coolant pressure boundary.

In Section 5.1.2, "Increase in FW flow as a result of FW system malfunction," of Technical Report MUAP-07014-P (R5), the applicant refers to DCD Section 15.1.2 and states that for this event the RCS pressure limit is not challenged and the reactor power is approximately constant and DNB does not occur even if the high-high steam generator (SG) water level reactor trip is not assumed. Therefore, the core coolability is maintained and for this event concurrent with a CCF, thereby the dose associated does not exceed the guidelines limits.

Furthermore, the graph depicted in Figure 15.1.2-7, "DNBR versus Time" for increase in FW flow, shows that the DNBR curve continues downward and rises approximately at 30 seconds instead of decreasing or becoming flat. Since, the applicant referenced DCD Section 15.1.2and used its results and categorized this event as "equivalent protection" event in the D3coping analysis, the staff requests the applicant to provide additional information and justification for the following:

Provide justification for why this event is categorized as an "equivalent protection," and a coping analysis is not required. What happens to the DNBR in DCD Figure 15.1.2-7 as the DNBR appears to still be decreasing. Does the curve continue to decrease without the high-high level SG trip? Demonstrate that the DNB does not occur without a reactor trip.

ANSWER:

Technical Report MUAP-07014-P (R5) refers to DCD Section 15.1.2 and states that for this event the RCS pressure limit is not challenged, the reactor power is approximately constant,

and DNB does not occur even if the high-high steam generator (SG) water level reactor trip is not assumed.

In order to provide justification for this statement, MHI has performed a sensitivity analysis. The sensitivity analysis is for an increase in feedwater flow event where the reactor trip is not assumed. The assumptions, input parameters, and initial conditions assumed in the sensitivity analysis are the same as for the DCD Section 15.1.2 safety analysis except that the reactor trip actuation by the RTS is ignored. The results for the analysis of the event without any reactor trip are shown in Figures 7.8-26.1 through 7.8-26.3. The figures shows that the reactor power is approximately constant, DNB does not occur, and the RCS pressure limit is not challenged. In the technical report, the event which does not need reactor trip to meet the AOO acceptance criteria is defined as "equivalent protection".

Figure 7.8-26.1 Reactor Power versus Time
Increase in Feedwater Flow without Reactor Trip

Figure 7.8-26.2 DNBR versus Time
Increase in Feedwater Flow without Reactor Trip

Figure 7.8-26.3 RCS Pressure versus Time
Increase in Feedwater Flow without Reactor Trip

Impact on DCD
There is no impact on the DCD.

Impact on R-COLA
There is no impact on the R-COLA.

Impact on PRA
There is no impact on the PRA.

Impact on Technical / Topical Reports
There is no impact on the technical / topical reports.

This completes MHI's response to the NRC's question.

RESPONSE TO REQUEST FOR ADDITIONAL INFORMATION

06/13/2013

US-APWR Design Certification

Mitsubishi Heavy Industries

Docket No. 52-021

RAI NO.:	**NO. 988-7021**
SRP SECTION:	**07.08 - DIVERSEINSTRUMENTATION AND CONTROL SYSTEMS**
APPLICATION SECTION:	**MUAP-07014 (REV 5) - D3 COPING ANALYSIS**
DATE OF RAI ISSUE:	**01/29/2013**

QUESTION NO. :07.08-27

BTP 7-19, Rev 5, acceptance criteria states that for AOO/PA events occurring in conjunction with each single postulated CCF, the plant response calculated using best-estimate analyses should not result in radiation release exceeding 10 percent of the 10 CFR 100 guideline value or violation of the integrity of the primary coolant pressure boundary.

In Section 5.2.6, "Loss of Non-Emergency AC Power to the Station Auxiliaries," of Technical Report MUAP-07014-P (R5), the applicant categorized this event as "equivalent protection" and an analysis is not performed. For this event, it is assumed to result in the loss of all power to station auxiliaries and a complete loss of external (offsite) grid accompanied by a turbine- generator trip or loss of the onsite AC distribution system. The staff requests the following:

a) Revision 3 of DCD Chapter 5, Table 5.4.10.3 states that the US-APWR reactor coolant system hydrostatic test pressure is 3106 psig. Justify why 3200 psig, as identified in MUAP-07014, Revision 5, section 4.3, is an acceptable pressure acceptance criteria or provide a new pressure acceptance criteria.

b) It is not clear how reactor coolant pressure integrity is demonstrated. What is thepressurizer high-pressure setpoint to trip the reactor? Is the trip setpoint adequate to protectthe 3200 psig limit or does it need actuation of the relief valves (RVs) to relieve the pressure?

c) Revision 3 of DCD Section 15.8, section 15.8.2, identifies the pressure limit as 3200 psia.MUAP-07014, Revision 5, section 4.3, says the limit is 3200 psig. The units do not match.Identify the incorrect unit and correct it.

d) DAS trip is credited for coolability for this event. What is the heat sink and what is thesource of water to the heat-sink, as the AFW is not available. Because, AFW pump is

motordriven and loss of AC power results in loss of power supply for the MG set. What motive forceis available to drive the AFW pump?

ANSWER:

This question involves the same subject as that in Question 07.08-33 issued to MHI in RAI 1037-7045 dated 5/20/2013. MHI will respond to the issue contained in questions 07.08-27 and 07.08-33 in its response to question 07.08-33.

Impact on DCD
See the response in Question 07.08-33.

Impact on R-COLA
See the response in Question 07.08-33.

Impact on PRA
See the response in Question 07.08-33.

Impact on Technical / Topical Reports
See the response in Question 07.08-33.

RESPONSE TO REQUEST FOR ADDITIONAL INFORMATION

06/13/2013

US-APWR Design Certification

Mitsubishi Heavy Industries

Docket No. 52-021

RAI NO.:	**NO. 988-7021**
SRP SECTION:	**07.08 - DIVERSEINSTRUMENTATION AND CONTROL SYSTEMS**
APPLICATION SECTION:	**MUAP-07014 (REV 5) - D3 COPING ANALYSIS**
DATE OF RAI ISSUE:	**01/29/2013**

QUESTION NO. :07.08-28

BTP 7-19, Rev 5, acceptance criteria states that for AOO/PA events occurring in conjunction with each single postulated CCF, the plant response calculated using best-estimate analyses should not result in radiation release exceeding 10 percent of the 10 CFR 100 guideline value or violation of the integrity of the primary coolant pressure boundary.

In Chapter 15, subsection 15.5.2, "Chemical and Volume Control System (CVCS)malfunction..." event, it states that the boration can cause an insertion of negative reactivity, which in turn can result in a power and RCS pressure decrease. There would be very little or no reactivity inserted, because the VCT and RCS are approx at the same boron concentration.

As a result, the CVS boron is assumed to be injected at the RCS boron concentration, and the event is analyzed for pressurizer over-fill only. Thus, the Chapter 15 does not indicate any analysis performed for the pressurizer relief water. Further, according to Section 5.5.2, MUAP-07014 (R5), the time available (for the operator action) is more than (at least) 60 minutes (to mitigate this event) because the pressurizer safety valve has sufficient capacity to be less than the criterion for RCPB. However, the applicant stated that the HFE analysis would confirm that sufficient margin exists between the time available and time required for local actions as discussed in Section 3.4 of the MUAP-07014-P (R5).

Therefore, the staff requests for the following additional information:

a) Justify the pressurizer safety valves are large enough to pass maximum RCS inventory increase. Describe if limiting case is a loss of letdown or additional charging pump operations.

b) How is the 60 minutes, described on pages 5-50/51, Section 5.5.2 of MUAP-07014 (R5), related to pressuizer safety valve relief capacity? Clearly state how the 60 minutes is determined.

ANSWER:

a) In DCD Chapter 15, the CVCS flow is conservatively assumed to be injected into the RCS at a constant rate of 310 gpm without letdown flow. This flow condition bounds both the loss of letdown condition and the additional charging pump operation with isolation valve in the fully open condition. This flow rate will result in pressurizer overfill at approximately 20 minutes. After that time, water relief through the pressurizer safety valves will occur. The flow rate of 310 gpm is approximately 1% of the pressurizer safety valve capacity (total). Therefore the total valve capacity is sufficiently large to relieve the additional flow and therefore maintain RCS integrity.

b) The termination of the CVCS flow is not a time critical action as it is not required to prevent violation of the integrity of the primary coolant pressure boundary and DNB. The time does not depend on the pressurizer relief valve capacity since the valve capacity is large enough, as discussed in part a) above, to allow this condition to persist indefinitely. However, the CVCS flow should be stopped as soon as possible to terminate the water relief through the valves. Therefore, the Technical Report MUAP-07014-P (R5) states that the time available is greater than at least 60 minutes as a reasonable value based on engineering judgment. This time available to terminate CVCS flow is longer than the time required listed in Table 5.5.2-1 in the technical report, and will be confirmed by the HFE analysis.

Impact on DCD
There is no impact on the DCD.

Impact on R-COLA
There is no impact on the R-COLA.

Impact on PRA
There is no impact on the PRA.

Impact on Technical / Topical Reports
There is no impact on the technical / topical reports.

This completes MHI's response to the NRC's question.

RESPONSE TO REQUEST FOR ADDITIONAL INFORMATION

06/13/2013

US-APWR Design Certification

Mitsubishi Heavy Industries

Docket No. 52-021

RAI NO.:	**NO. 988-7021**
SRP SECTION:	**07.08 - DIVERSEINSTRUMENTATION AND CONTROL SYSTEMS**
APPLICATION SECTION:	**MUAP-07014 (REV 5) - D3 COPING ANALYSIS**
DATE OF RAI ISSUE:	**01/29/2013**

QUESTION NO. :07.08-29

BTP 7-19, Rev 5, acceptance criteria states that for AOO/PA events occurring in conjunction with each single postulated CCF, the plant response calculated using best-estimate analyses should not result in radiation release exceeding 10 percent of the 10 CFR 100 guideline value or violation of the integrity of the primary coolant pressure boundary.

For LB-LOCA with a concurrent CCF, according to Section 5.6.5.1 of MUAP-07014-P (R5), the pressurizer pressure decreases rapidly to reach the automated ECCS actuation setpoint, which results in the DAS SI actuation and a DHP alarm. The time available from the reactor trip actuation alarm to manual actuation of containment spray is more than 24 hours. The applicant further states that HFE analysis to confirm sufficient margin between time available and time required for local actions as discussed in Section 3.4. Further, the applicant states that PRA analysis in MUAP-07030-P (R3) provides the time (withheld as proprietary) that it takes from the initiation of a LB-LOCA to containment failure due to overpressure with failure of SI containment spray. The staff requests the applicant to provide the additional information for the following:

HFE analysis needs to confirm sufficient margin between time available and time required for local actions with respect to mitigating pressure boundary integrity. Explain the relation between containment spray actuation time of 24 hours and the PRA analysis time from the initiation of a LB-LOCA to containment failure, as it relates to pressure boundary integrity. Again, provide a brief description and justification of Section 3.4 analysis with respect to this event.

ANSWER:

As described in Section 5.6.5.1 of MUAP-07014-P (R5), the DAS reactor trip actuation alarm will occur almost immediately following initiation of a LB-LOCA with concurrent CCF. The ECCS actuation alarm will also occur within about 10 seconds and will result in injection flow to the RCS within several minutes. All of these actions are automatically performed by the

DAS. The actuation of containment spray is performed by manual action following the LB-LOCA with concurrent CCF. This manual action must be performed prior to failure of containment (i.e. containment ultimate pressure is reached).
The severe accident evaluation for long-term containment overpressure is described in DCD Tier 2 Subsection 19.2.3.3.8. It is concluded that "Accident progression analyses have been performed using MAAP 4.0.6 as part of the Level 2 PRA analysis for the PDSs. It is found that even if the containment heat removal system is not available, the containment vessel can withstand pressurization for more than 24 hours following the onset of core damage." The actual time of [ ] from the PRA analysis is provided in Section 5.6.5.1 of MUAP-07014-P (R5).

As indicated above, the analysis does not credit containment spray. Once containment spray is actuated, containment pressure will decrease. As long as containment spray is actuated prior to the containment failure time in the PRA analysis, containment integrity will be maintained. It is therefore reasonable to assume that the time available from the reactor trip actuation alarm to manual actuation of containment spray is more than 24 hours.

In terms of the HFE analysis described in Section 3.4 of MUAP-07014-P (R5), the analysis confirms that there is sufficient margin between the time available as defined in the safety analysis or PRA and the time required as determined by the HFE task analysis. The time required for operator actions for an event is based on the Goals, Operators, Methods, and Selection rules (GOMS) evaluations (refer to MUAP-09019). The time required is the time to complete the operator action based on the summation of the individual times for each operational sequence diagram (OSD). In the task analysis an OSD for each sub-step of operator action is specified. The OSD patterns identify operator decision and action functions required to perform that sub-step.

To summarize, the results of a PRA analysis show that containment failure will not occur until well after 24 hours following initiation of a LB-LOCA concurrent with CCF. Based on this result, the time available for manual operator action to prevent containment failure was chosen as more than 24 hours. The HFE analysis will show that the time required to perform this action is less than the time available. This will ensure that the actuation of containment spray will be performed to maintain the pressure boundary integrity following initiation of a LB-LOCA concurrent with CCF.

Impact on DCD
There is no impact on the DCD.

Impact on R-COLA
There is no impact on the R-COLA.

Impact on PRA
There is no impact on the PRA.

Impact on Technical / Topical Reports
An editorial error in MUAP-07014-P/NP (R5) will be corrected as shown in the attached markup in Attachment-1.

This completes MHI's response to the NRC's question.

5.6.4 Radiological Consequences of Main Steam Line Failure Outside Containment (BWR)

This section is not applicable to the US-APWR.

5.6.5 Loss-of-Coolant Accidents Resulting from Spectrum of Postulated Piping Breaks within the Reactor Coolant Pressure Boundary

Loss-of-coolant accidents (LOCAs) are PAs that would result from the loss of reactor coolant at a rate in excess of the capability of the normal reactor coolant makeup system. The coolant loss occurs from piping breaks in the RCPB up to and including a break equivalent in size to the double-ended rupture of the largest pipe in the RCS. The large break LOCA and small break LOCA are discussed separately in the following subsections.

5.6.5.1 Large Break Loss-of-Coolant Accident (LBLOCA)

For an LBLOCA without a CCF, the safety injection (SI) signal is automatically initiated to start the SI pumps and deliver safety injection water into the RCS. For an LBLOCA with a concurrent CCF, the DAS actuates the SI pumps automatically.

(1) Pressure Boundary Integrity

An LBLOCA event violates the integrity of the RCPB as the event initiator. Therefore, the event acceptance criterion is that the containment integrity should be maintained.

The DAS provides the low pressurizer pressure reactor trip actuation alarm, automatic ECCS actuation alarm, and/or the containment pressure indicator to alert the operator to the potential need for manual actions to maintain containment integrity after SI actuation.

For LBLOCA, the pressurizer pressure decreases rapidly to reach the automated ECCS actuation setpoint. This results in the DAS SI actuation and a DHP alarm. The operator continues to check the plant parameters on the DHP for preparation of containment spray actuation. The time available from the reactor trip actuation alarm to manual actuation of containment spray is more than 24 hrs. Within this duration the containment pressure is maintained less than the ultimate pressure of 216 psia. This time is sufficient for manual actuation of containment spray using local controls. HFE analysis to confirm sufficient margin between time available and time required for local actions as discussed in Section 3.4.

The US-APWR Probabilistic Risk Assessment, MUAP-07030 (Reference 10) shows that it

(2) Core Coolability

For LBLOCA, pressurizer pressure decreases rapidly to reach the reactor trip setpoint and also the SI pump shutoff head. The DAS actuates the SI pumps automatically.

RESPONSE TO REQUEST FOR ADDITIONAL INFORMATION

06/13/2013

US-APWR Design Certification

Mitsubishi Heavy Industries

Docket No. 52-021

RAI NO.:	**NO. 988-7021**
SRP SECTION:	**07.08 - DIVERSEINSTRUMENTATION AND CONTROL SYSTEMS**
APPLICATION SECTION:	**MUAP-07014 (REV 5) - D3 COPING ANALYSIS**
DATE OF RAI ISSUE:	**01/29/2013**

QUESTION NO. :07.08-30

BTP 7-19, Rev 5, acceptance criteria states that for AOO/PA events occurring in conjunction with each single postulated CCF, the plant response calculated using best-estimate analyses should not result in radiation release exceeding 10 percent of the 10 CFR 100 guideline value or violation of the integrity of the primary coolant pressure boundary.

According to MUAP-07014-P (R5), section 5.1.4, the inadvertent opening of steam generator (SG) safety valves, safety relief valves, depressurization valves, or turbine bypass valves(TBVs) can cause a rapid increase in steam flow and a depressurization of the secondary system. Further, the report states that DCD Section 15.1.4 evaluates this event from hot standby conditions. Therefore, this event is not evaluated separately in the D3 coping analysis. In this regard, the staff requests for the following additional information:

a) Is there a common cause failure (CCF) which would lead to an opening of the TBVs causing a cooldown greater than that of the steam line break (SLB) accident? If so, provide the basis for the CCF failure.

b) Also, provide the number of TBVs opened, the maximum steam flowrate caused by a CCF of the turbine bypass and compare that value to the SLB D3 coping analysis steam flow rate.

c) If the CCF caused turbine bypass cooldown is greater than the SLB D3 analysis, provide plots of core power, RCS pressure, and DNBR verses time.

ANSWER:

a)
There is no CCF which would lead to an opening of the TBVs causing a cooldown greater than that of SLB accident.

As described in Revision 3 of DCD Subsections 7.3.1.12 and 7.7.1.1.11, the turbine bypass control function output signals are provided from the PCMS to electro-pneumatic positioners and trip open solenoids for the turbine bypass valves, and the block turbine bypass interlock signals are provided from two redundant trains of the PSMS to redundant permissive solenoids. Therefore, to cause spurious TBV opening due to a design defect in the MELTAC Basis Software that is common to PSMS and PCMS controllers, those defects would need to be triggered in two divisions of the PSMS and the PCMS. The signal status of the block turbine bypass interlock from each division of the PSMS is monitored and alarmed in the MCR when the block signal is removed. The trip open signal from the PCMS is also alarmed. Therefore, since the triggering of these Basic Software defects is self-announcing, they can be corrected before they result in a CCF that opens any TBVs.

The following paragraphs discuss potential software defects in the PCMS alone that have the potential to spuriously open TBVs.

In Hot Full Power (HFP) operation, T_{avg} control mode is administratively selected for TBVs control and the loss of load interlock, which is described in DCD Subsection 7.7.1.1.12 and Figure 7.2-2, prohibits the PCMS from opening or controlling TBVs. The loss of load interlock logic is implemented in the PSMS and output signals generated by the interlock logic are combined with the block turbine bypass interlock signals described in DCD Subsection 7.3.1.12 within the PSMS. If an inadvertent Steam Header Pressure Control mode signal is generated, the operation mode is changed to steam header control mode spuriously. If opening rate signals are output from PCMS concurrent with a spurious mode change signal caused by CCF of the same PCMS controller, 4 valves of 1st bank TBVs would open. But even if the same software defect caused a spurious Steam Header Pressure Control mode signal and a spurious 100% opening rate signal, the flow rate of this case caused by a PCMS CCF is limited to less than that of SLB accident.

In Hot Zero Power (HZP) operation, the Steam Header Pressure Control mode is selected and the PSMS permits the 1st bank TBVs, including the cooldown TBVs, that accounts for 20% of rated capacity of all TBVs, to be controlled by the PCMS. The PCMS normally outputs control signals for less than 10% opening to those TBVs. In this situation, if inadvertent mode change signal is output from PCMS controller caused by CCF same as HFP case, operation mode would be changed to T_{avg} mode. It is noted that in HZP operation, C-8 : Turbine Trip signal concurrent with T_{avg} mode permits 1st and 2nd bank TBVs, and 3rd and 4th bank TBVs are blocked. Therefore, 8 TBVs in 1st and 2nd bank would open by PCMS CCF. But, flow rate of this case is limited to less than that of SLB accident

MHI will revise DCD Figure 7.2-2 and Subsection 7.7.1.1.12 to clarify that the loss of load interlock logic is implemented in the PSMS.

b)
According to discussion in a), 4 TBVs would open in HFP case and 8 TBVs would open in HZP case, but turbine bypass cooldown is not greater than the SLB D3 analysis. MHI will provide a separate evaluation to address CCFs that may lead to other beyond design basis conditions in the response to RAI 996-7040.

c)
A CCF caused turbine bypass cooldown is not greater than the SLB D3 analysis as discussed above.

Impact on DCD
DCD Figure 7.2-2 (Sheet 17 of 21) and Subsection 7.7.1.1.12 will be revised as indicated in the attached markup in Attachment-2.

Impact on R-COLA
There is no impact on the R-COLA.

Impact on PRA
There is no impact on the PRA.

Impact on Technical / Topical Reports
There is no impact on the technical / topical reports.

This completes MHI's response to the NRC's question.

DCD_07.08-30

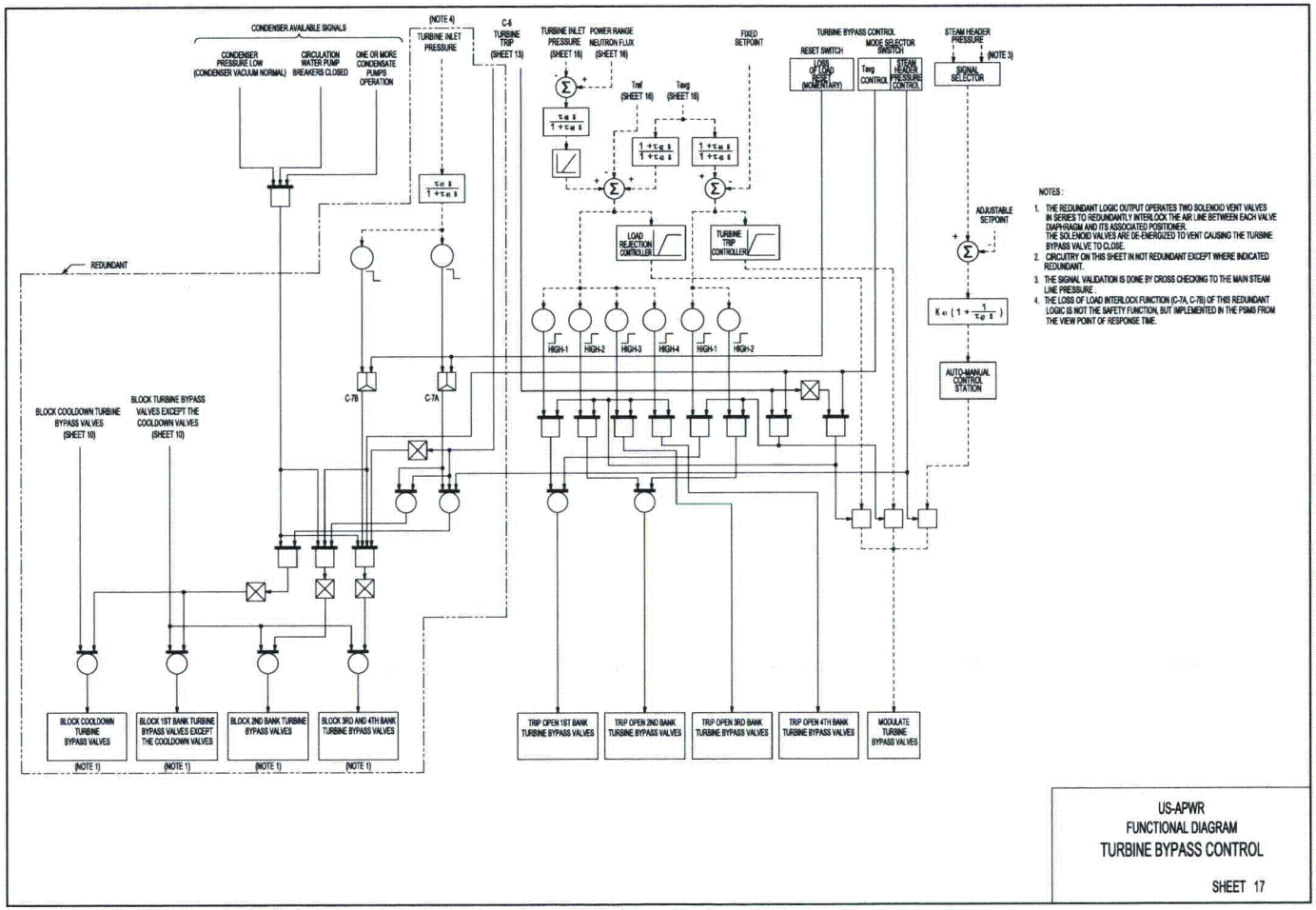

Figure 7.2-2 Functional Logic Diagram for Reactor Protection and Control System (Sheet 17 of 21)

rate-lag compensation allows for a decrease in gain in the load rejection controller, thereby increasing stability.

Following a sudden load decrease, T_{ref} and turbine inlet pressure are immediately decreased and T_{avg} tends to increase. This generates an immediate demand signal for the turbine bypass control function. Following the initial trip opening the error signal reduces in magnitude, indicating that the T_{avg} is reduced toward the reference T_{avg} and power range neuron flux is reduced by an insertion of control rods. At this point, the turbine bypass valves are modulated and the rod control function commands the control rods to insert in a controlled manner to reduce the reactor power to match the turbine load. On a load rejection resulting in a turbine runback, the turbine bypass terminates when the reactor power matches the turbine load and the temperature error is within the maneuvering capability of the control rods. On a grid disconnect, the turbine bypass control function modulates closed in response to the control rods reducing nuclear power to approximately 15% power. At this point, the rod control function is transferred to manual mode to maintain the nuclear power by the operator and the plant stabilizes in preparation for a turbine/generator restart and/or grid synchronization with the turbine bypass partially open.

7.7.1.1.11.4 Turbine Trip

For the US-APWR, a turbine trip will lead to a reactor trip and a reactor trip will lead to a turbine trip. Following a turbine trip, the load rejection control function is defeated and the turbine trip control function becomes active. The demand signal for the turbine bypass control function is the error signal between the lead-lag compensated T_{avg} and the no-load reference T_{avg}. When the error signal exceeds a predetermined setpoint, two banks of the turbine bypass valves are tripped opened in a prescribed sequence. As the error signal reduces in magnitude, indicating that the T_{avg} is being reduced toward the reference no-load value, the turbine bypass valves are modulated. This regulates the rate of decay heat removal and establishes the equilibrium hot shutdown condition.

7.7.1.1.12 Turbine Bypass Interlock

Low-low T_{avg} turbine bypass block:

The turbine bypass control functions are prevented by the interlock from the PSMS, which controls redundant non-Class 1E permissive solenoids on each turbine bypass valve from SLS trains A and D. Excessive T_{avg} cooldown is blocked by this function as described in Subsection 7.3.1.12.

Loss of load interlock:

Actuation of turbine bypass on small load perturbations is prevented by an independent load rejection sensing circuit. This non-safety interlock logic is implemented in the PSMS from the view point of response time. This circuit senses the rate of decrease in the turbine load as detected by turbine inlet pressure. It unblocks the turbine bypass valves only when the rate of load rejection exceeds the preset value corresponding to a 10% step load decrease or a sustained ramp load decrease of greater than 5% per minute. The unblocking of the turbine bypass valves is latched to enable the load rejection DCD_07.08-30