CENG
a joint venture of
Constellation Energy EDF

NINE MILE POINT
NUCLEAR STATION

P.O. Box 63
Lycoming, NY 13093

May 1, 2013

U.S. Nuclear Regulatory Commission
Washington, DC 20555-0001

ATTENTION: Document Control Desk

SUBJECT: Nine Mile Point Nuclear Station
Unit No. 1; Docket No. 50-220

Radioactive Effluent Release Report, January – December 2012

In accordance with 10 CFR 50.36a and the Nine Mile Point Unit 1 (NMP1) Technical Specifications, enclosed is the Radioactive Effluent Release Report for the period January through December 2012.

Included in this report is a summary of gaseous and liquid effluents and solid waste released from the station during the reporting period (Attachments 1 - 6), a summary of revisions to the Offsite Dose Calculation Manual (ODCM) and the Radwaste Process Control Program (PCP) during the reporting period (Attachments 7 and 8), and an explanation as to the cause and corrective actions regarding any station liquid and/or gaseous effluent monitoring instrumentation that was non-functional for greater than 30 days (Attachment 9). Attachments 10 and 11 provide a summary and assessment of radiation doses to Members of the Public within and outside the site boundary, respectively, from liquid and gaseous effluents, as well as direct radiation, in accordance with 40 CFR 190. Attachment 12 is a summary of the tritium results for the groundwater protection program. Attachments 13 and 14 area copies of Revision 33 and 34 of the ODCM.

The format used for the effluent data is outlined in Appendix B of Regulatory Guide 1.21, Revision 1. Dose assessments were made in accordance with the NMP1 ODCM. During the reporting period from January through December 2012, NMP1 did not exceed any 10 CFR 20, 10 CFR 50, Technical Specification, or ODCM limits for gaseous or liquid effluents.

Should you have questions regarding the information in this submittal, please contact me at (315) 349-5219.

Very truly yours,

John J. Dosa
Director Licensing

JJD/KES

A009
IE48
NRR

Enclosure: Nine Mile Point Nuclear Station, Unit 1, Radioactive Effluent Release Report, January – December 2012

cc: Region Administrator, Region I, NRC
Project Manager, NRC
Resident Inspector, NRC
B. Dionne, NRC

ENCLOSURE

NINE MILE POINT NUCLEAR STATION, UNIT 1

RADIOACTIVE EFFLUENT RELEASE REPORT

January – December 2012

Nine Mile Point Nuclear Station, LLC
May 1, 2013

NINE MILE POINT NUCLEAR STATION - UNIT 1

RADIOACTIVE EFFLUENT RELEASE REPORT

January – December 2012

CENG SM

a joint venture of

Constellation Energy · EDF

NINE MILE POINT
NUCLEAR STATION

NINE MILE POINT NUCLEAR STATION - UNIT 1

RADIOACTIVE EFFLUENT RELEASE REPORT

JANUARY – DECEMBER 2012

SUPPLEMENTAL INFORMATION

Facility: Nine Mile Point Unit 1 **Licensee: Nine Mile Point Nuclear Station, LLC**

1. TECHNICAL SPECIFICATION LIMITS/ODCM Limits

A) FISSION AND ACTIVATION GASES

1. The dose rate limit of noble gases released in gaseous effluents from the site to areas at and beyond the site boundary shall be less than or equal to 500 mrem/year to the total body and less than or equal to 3000 mrem/year to the skin.

2. The air dose due to noble gases released in gaseous effluents from Nine Mile Point Unit 1 to areas at and beyond the site boundary shall be limited during any calendar quarter to less than or equal to 5 milliroentgen for gamma radiation and less than or equal to 10 mrad for beta radiation, and during any calendar year to less than or equal to 10 milliroentgen for gamma radiation and less than or equal to 20 mrad for beta radiation.

B&C) TRITIUM, IODINES AND PARTICULATES, HALF LIVES > 8 DAYS

1. The dose rate limit of Iodine-131, Iodine-133, Tritium and all radionuclides in particulate form with half-lives greater than eight days, released in gaseous effluents from the site to areas at and beyond the site boundary shall be less than or equal to 1500 mrem/year to any organ.

2. The dose to a member of the public from Iodine-131, Iodine-133, Tritium and all radionuclides in particulate form with half-lives greater than eight days in gaseous effluents released from Nine Mile Point Unit 1 to areas at and beyond the site boundary shall be limited during any calendar quarter to less than or equal to 7.5 mrem to any organ, and during any calendar year to less than or equal to 15 mrem to any organ.

D) LIQUID EFFLUENTS

1. The concentration of radioactive material released in liquid effluents to unrestricted areas shall be limited to ten times the concentrations specified in 10 CFR Part 20, Appendix B, Table 2, Column 2 for radionuclides other than dissolved or entrained noble gases. For dissolved or entrained noble gases, the concentration shall be limited to 2E-04 microcuries/ml total activity.

2. The dose or dose commitment to a member of the public from radioactive materials in liquid effluents released from Nine Mile Point Unit 1 to unrestricted areas shall be limited during any calendar quarter to less than or equal to 1.5 mrem to the total body and to less than or equal to 5 mrem to any organ, and during any calendar year to less than or equal to 3 mrem to the total body and to less than or equal to 10 mrem to any organ.

2. MEASUREMENTS AND APPROXIMATIONS OF TOTAL RADIOACTIVITY

Described below are the methods used to measure or approximate the total radioactivity and radionuclide composition in effluents.

A) FISSION AND ACTIVATION GASES

Noble gas effluent activity is determined by on-line gross activity monitoring (calibrated against gamma isotopic analysis of a 4.0L Marinelli grab sample) of an isokinetic stack sample stream.

B) IODINES

Iodine effluent activity is determined by gamma spectroscopic analysis (at least weekly) of charcoal cartridges sampled from an isokinetic stack sample stream.

C) PARTICULATES

Activity released from the main stack is determined by gamma spectroscopic analysis (at least weekly) of particulate filters sampled from an isokinetic sample stream and composite analysis of the filters for non-gamma emitters.

D) TRITIUM

Tritium effluent activity is measured by liquid scintillation or gas proportional counting of monthly samples taken with an air sparging/water trap apparatus. Tritium effluent activity is measured during purge and weekly when fuel is offloaded until stable tritium release rates are demonstrated.

E) EMERGENCY CONDENSER VENT EFFLUENTS

The effluent curie quantities are estimated based on the isotopic distribution in the Condensate Storage Tank water and the Emergency Condenser shell water. Actual isotopic concentrations are found via gamma spectroscopy. Initial release rates of Sr-89, Sr-90 and Fe-55 are estimated by applying scaling factors to release rates of gamma emitters and actual release rates are determined from post offsite analysis results. The activity of fission and activation gases released due to tube leaks is based on reactor steam leak rates using offgas isotopic analyses.

F) LIQUID EFFLUENTS

Isotopic contents of liquid effluents are determined by isotopic analysis of a representative sample of each batch and composite analysis of non-gamma emitters. Tritium activity is estimated on the most recent analysis of the Condensate Storage Tank water. Initial release rates of Sr-89, Sr-90, and Fe-55 are estimated by applying scaling factors to release rates of gamma emitters and actual release rates are determined from post offsite analysis results.

G) SOLID EFFLUENTS

Isotopic contents of waste shipments are determined by gamma spectroscopy analysis of a representative sample of each batch. Scaling factors established from primary composite sample analyses conducted off-site are applied, where appropriate, to find estimated concentration of non-gamma emitters. For low activity trash shipments, curie content is estimated by dose rate measurement and application of appropriate scaling factors.

H) C-14

The production of C-14 and the effluent dose consequences are estimates based on EPRI methodology provided in EPRI Report 1021106, *Estimation of Carbon-14 in Nuclear Power Plant Gaseous Effluents*, December 2010 and NUREG-0016, *Calculation of Releases of Radioactive Materials in Gaseous and Liquid Effluents for Boiling Water Reactors (BWR-GALE Code)*.

ATTACHMENT 1
SUMMARY DATA

Unit 1 X **Unit 2** _____ **Reporting Period** January -December 2012

Liquid Effluents:

ODCM Required Maximum Effluent Concentration (MEC) = 10 x 10CFR20, Appendix B, Table 2, Column 2

There were no batch discharges of liquid radwaste requiring use of MEC to determine allowable release rate.

There were no Emergency Condenser Vent Liquid Discharge in 2012.

Average MEC - µCi/ml (Qtr. 1) =	NO RELEASES	Average MEC - µCi/ml (Qtr. 3) =	NO RELEASES
Average MEC - µCi/ml (Qtr. 2) =	NO RELEASES	Average MEC - µCi/ml (Qtr. 4) =	NO RELEASES

Average Energy (Fission and Activation gases - MeV):

Qtr. 1:	$\bar{E}\gamma$ =	N/A	$\bar{E}\beta$ =	N/A
Qtr. 2:	$\bar{E}\gamma$ =	N/A	$\bar{E}\beta$ =	N/A
Qtr. 3:	$\bar{E}\gamma$ =	2.47E-01	$\bar{E}\beta$ =	3.17E-01
Qtr. 4:	$\bar{E}\gamma$ =	2.20E-03	$\bar{E}\beta$ =	2.50E-01

Liquid:

	Radwaste	EC Vent
Number of Batch Releases	0	0
Total Time Period for Batch Releases (hrs)	0	0.00
Maximum Time Period for a Batch Release (hrs)	0	0.00
Average Time Period for a Batch Release (hrs)	0	0.00
Minimum Time Period for a Batch Release (hrs)	0	0.00

Total volume of water used to dilute the liquid effluent during release period (L)		1st	2nd	3rd	4th
	Radwaste	N/A	N/A	N/A	N/A

Total volume of water available to dilute the liquid effluent during report period (L)		1st	2nd	3rd	4th
	Radwaste	1.25E+11	1.28E+11	1.35E+11	1.32E+11

Gaseous(Emergency Condenser Vent):

Number of Batch Releases	0
Total Time Period for Batch Releases (hrs)	0.00
Maximum Time Period for a Batch Release (hrs)	0.00
Average Time Period for a Batch Release (hrs)	0.00
Minimum Time Period for a Batch Release (hrs)	0.00

Gaseous (Primary Containment Purge):

Number of Batch Releases	11
Total Time Period for Batch Releases (hrs)	56.05
Maximum Time Period for a Batch Release (hrs)	9.92
Average Time Period for a Batch Release (hrs)	5.10
Minimum Time Period for a Batch Release (hrs)	0.75

ATTACHMENT 1
SUMMARY DATA

Unit 1 X **Unit 2** _____ **Reporting Period** January - December 2012

Abnormal Releases:

A. Liquids:

Number of Releases	0	
Total Activity Released	N/A	Ci

B. Gaseous:

Number of Releases	0	
Total Activity Released	N/A	Ci

In August of 2012, tritium was identified in the ground water outside Unit 1. Subsequent investigations determined that the source of the tritium was Emergency Condenser Vent discharges (during periodic testing, as well as, past events). Per the ODCM, and through station procedures, the gaseous and liquid effluent releases to the environment via this pathway are analyzed and reported in the monthly effluent releases and reported annually in the Radioactive Effluent Release Report (RERR). As a result of this discovery, the Unit 1 ODCM has been revised (Revision 34) to require composite samples of discharges from the Reactor Building Perimeter Drain be collected and analyzed, and the total curies reported in the RERR. Because this activity has been accounted for in previous RERRs, it is to be reported as a separate item, and not included in the liquid releases (Attachment 5).

Since 2003, the Emergency Condensers have been actuated 6 times. These are identified in the 2003, 2004, 2009 and 2010 RERRs. The perimeter drain pumps have been out of service since 2008. Releases prior to that are assumed to have been dicharged to the storm drains while the pumps were functional. A total of 0.06 Curies of tritium have been reported as dicharged via the liquid pathway since 2009. Taking into account decay, that would be equivalent to 0.05 Curies on December 31, 2012. As of December 31, 2012, 0.04 Curies of tritium have been discharged from the Reactor Building Perimeter Drains. No other isotopes have been identified.

ATTACHMENT 2

Unit 1 X Unit 2 _____ Reporting Period January - December 2012

GASEOUS EFFLUENTS - SUMMATION OF ALL RELEASES, ELEVATED AND GROUND LEVEL

		1st Quarter	2nd Quarter	3rd Quarter	4th Quarter	EST. TOTAL ERROR, %
A. Fission & Activation Gases (1)						
1. Total Release	Ci	**	**	2.48E+00	1.75E-01	5.00E+01
2. Average Release Rate	µCi/sec	**	**	3.12E-01	2.20E-02	
B. Iodines (1)						
1. Total Iodine - 131	Ci	1.16E-04	9.38E-05	6.46E-05	2.44E-05	3.00E+01
2. Average Release Rate for Period	µCi/sec	1.47E-05	1.19E-05	8.21E-06	3.10E-06	
C. Particulates (1)						
1. Particulates with Half-lives>8 days	Ci	4.22E-04	2.45E-04	9.39E-04	1.02E-03	3.00E+01
2. Average Release Rate for Period	µCi/sec	5.36E-05	3.12E-05	1.19E-04	1.30E-04	
3. Gross Alpha Radioactivity	Ci	**	**	**	**	2.50E+01
D. Tritium (1)						
1. Total Release	Ci	6.03E+00	6.55E+00	6.88E+00	4.24E+00	5.00E+01
2. Average Release Rate for Period	µCi/sec	7.67E-01	8.34E-01	8.73E-01	5.37E-01	
E. Percent of Tech. Spec. Limits Fission and Activation Gases						
Percent of Quarterly Gamma Air Dose Limit (5 mR)	%	0.00E+00	0.00E+00	1.00E-02	0.00E+00	
Percent of Quarterly Beta Air Dose Limit (10 mrad)	%	0.00E+00	0.00E+00	0.00E+00	0.00E+00	
Percent of Annual Gamma Air Dose Limit to Date (10 mR)	%	0.00E+00	0.00E+00	1.00E-02	1.00E-02	
Percent of Annual Beta Air Dose Limit to Date (20 mrad)	%	0.00E+00	0.00E+00	0.00E+00	0.00E+00	
Percent of Whole Body Dose Rate Limit (500 mrem/yr)	%	0.00E+00	0.00E+00	2.99E-04	1.19E-07	
Percent of Skin Dose Rate Limit (3000 mrem/yr)	%	0.00E+00	0.00E+00	1.05E-04	2.39E-06	
Tritium, Iodines, and Particulates (with half-lives greater than 8 days)						
Percent of Quarterly Dose Limit (7.5 mrem)	%	6.38E-02	5.11E-02	4.23E-02	1.31E-02	
Percent of Annual Dose Limit to Date (15 mrem)	%	3.22E-02	5.79E-02	7.97E-02	8.64E-02	
Percent of Organ Dose Limit (1500 mrem/yr	%	1.29E-03	1.03E-03	8.43E-04	2.61E-04	

(1) Concentrations less than the lower limit of detection of the counting system used are indicated with a double asterisk.

ATTACHMENT 3

Unit 1 X Unit 2 _____ Reporting Period January -December 2012

GASEOUS EFFLUENTS - ELEVATED RELEASE

Nuclides Released		Continuous Mode (2) 1st Quarter	2nd Quarter	3rd Quarter	4th Quarter
Fission Gases (1)					
Argon-41	Ci	**	**	**	**
Krypton-85	Ci	**	**	**	1.75E-01
Krypton-85m	Ci	**	**	**	**
Krypton-87	Ci	**	**	**	**
Krypton-88	Ci	**	**	**	**
Xenon-127	Ci	**	**	**	**
Xenon-131m	Ci	**	**	**	**
Xenon-133	Ci	**	**	**	**
Xenon-133m	Ci	**	**	**	**
Xenon-135	Ci	**	**	2.48E+00	**
Xenon-135m	Ci	**	**	**	**
Xenon-137	Ci	**	**	**	**
Xenon-138	Ci	**	**	**	**
Iodines (1)					
Iodine-131	Ci	1.16E-04	9.38E-05	6.46E-05	2.44E-05
Iodine-133	Ci	2.55E-03	2.99E-03	5.85E-05	**
Iodine-135	Ci	**	**	**	**
Particulates (1)					
Strontium-89	Ci	**	**	**	**
Strontium-90	Ci	**	**	**	**
Cesium-134	Ci	**	**	**	**
Cesium-137	Ci	**	**	**	**
Cobalt-60	Ci	1.81E-04	1.32E-04	3.53E-04	5.53E-05
Cobalt-58	Ci	6.09E-06	**	2.61E-06	5.83E-06
Manganese-54	Ci	**	**	2.04E-05	7.46E-06
Barium-140	Ci	**	**	**	**
Lanthanum-140	Ci	**	**	**	**
Niobium-95	Ci	**	**	**	**
Cerium-141	Ci	**	**	**	**
Cerium-144	Ci	**	**	**	**
Iron-59	Ci	**	**	**	**
Cesium-136	Ci	**	**	**	**
Chromium-51	Ci	**	**	**	7.61E-05
Zinc-65	Ci	**	**	**	**
Iron-55	Ci	2.35E-04	1.13E-04	5.63E-04	8.79E-04
Molybdenum-99	Ci	**	**	**	**
Neodymium-147	Ci	**	**	**	**
Tritium (1)	Ci	5.06E+00	5.42E+00	5.58E+00	3.28E+00

(1) Concentrations less than the lower limit of detection of the counting system used are indicated with a double asterisk. A lower limit of detection of 1.00E-04 µCi/ml for required noble gases, 1.00E-11 µCi/ml for required particulates, 1.00E-12 µCi/ml for required Iodines, and 1.00E-06 µCi/ml for Tritium as required by the ODCM, has been verified.

(2) Contributions from purges are included. There were no other batch releases during the reporting period.

ATTACHMENT 4

Unit 1 X Unit 2 _____ Reporting Period January - December 2012

GASEOUS EFFLUENTS - GROUND LEVEL RELEASES

Ground level releases are determined in accordance with the Off-Site Dose Calculation Manual and Chemistry procedures.

Nuclides Released		Continuous Mode			
		1st Quarter	2nd Quarter	3rd Quarter	4th Quarter
Fission Gases (1)					
Argon-41	Ci	**	**	**	**
Krypton-85	Ci	**	**	**	**
Krypton-85m	Ci	**	**	**	**
Krypton-87	Ci	**	**	**	**
Krypton-88	Ci	**	**	**	**
Xenon-127	Ci	**	**	**	**
Xenon-131m	Ci	**	**	**	**
Xenon-133	Ci	**	**	**	**
Xenon-133m	Ci	**	**	**	**
Xenon-135	Ci	**	**	**	**
Xenon-135m	Ci	**	**	**	**
Xenon-137	Ci	**	**	**	**
Xenon-138	Ci	**	**	**	**
Iodines (1)					
Iodine-131	Ci	**	**	**	**
Iodine-133	Ci	**	**	**	**
Iodine-135	Ci	**	**	**	**
Particulates (1)					
Strontium-89	Ci	**	**	**	**
Strontium-90	Ci	**	**	**	**
Cesium-134	Ci	**	**	**	**
Cesium-137	Ci	**	**	**	**
Cobalt-60	Ci	**	**	**	**
Cobalt-58	Ci	**	**	**	**
Manganese-54	Ci	**	**	**	**
Barium-140	Ci	**	**	**	**
Lanthanum-140	Ci	**	**	**	**
Niobium-95	Ci	**	**	**	**
Cerium-141	Ci	**	**	**	**
Cerium-144	Ci	**	**	**	**
Iron-59	Ci	**	**	**	**
Cesium-136	Ci	**	**	**	**
Chromium-51	Ci	**	**	**	**
Zinc-65	Ci	**	**	**	**
Iron-55	Ci	**	**	**	**
Molybdenum-99	Ci	**	**	**	**
Neodymium-147	Ci	**	**	**	**
Tritium (1)	Ci	9.69E-01	1.14E+00	1.29E+00	9.55E-01

(1) Concentrations less than the lower limit of detection of the counting system used are indicated with a double asterisk.

ATTACHMENT 5

Unit 1 X Unit 2 _____ Reporting Period January - December 2012

LIQUID EFFLUENTS - SUMMATION OF ALL RELEASES (1)

		1st Quarter	2nd Quarter	3rd Quarter	4th Quarter	Est. Total Error, %
A. Fission & Activation Products						
1. Total Release (not including Tritium, gases, alpha)	Ci	No Releases	No Releases	No Releases	No Releases	5.00E+01
2. Average diluted concentration during reporting period	µCi/ml	No Releases	No Releases	No Releases	No Releases	
B. Tritium						
1.Total release	Ci	No Releases	No Releases	No Releases	No Releases	5.00E+01
2. Average diluted concentration during the reporting period	µCi/ml	No Releases	No Releases	No Releases	No Releases	
C. Dissolved and Entrained Gases						
1. Total release	Ci	No Releases	No Releases	No Releases	No Releases	5.00E+01
2. Average diluted concentration during the reporting period	µCi/ml	No Releases	No Releases	No Releases	No Releases	
D. Gross Alpha Radioactivity						
1. Total release	Ci	No Releases	No Releases	No Releases	No Releases	5.00E+01
E. Volumes						
1. Prior to Dilution	Liters	No Releases	No Releases	No Releases	No Releases	5.00E+01
2. Volume of dilution water used during release period	Liters	No Releases	No Releases	No Releases	No Releases	5.00E+01
3. Volume of dilution water available during reporting period - Cooling Water	Liters	1.25E+11	1.28E+11	1.35E+11	1.32E+11	5.00E+01
F. Percent of Tech. Spec. Limits						
Percent of Quarterly Whole Body Dose Limit (1.5 mrem)	%	No Releases	No Releases	No Releases	No Releases	
Percent of Annual Whole Body Dose Limit to Date (3 mrem)	%	No Releases	No Releases	No Releases	No Releases	
Percent of Quarterly Organ Dose Limit (5 mrem)	%	No Releases	No Releases	No Releases	No Releases	
Percent of Annual Organ Dose Limit to Date (10 mrem)	%	No Releases	No Releases	No Releases	No Releases	
Percent of 10CFR20 Concentration Limit	%	No Releases	No Releases	No Releases	No Releases	
Percent of Dissolved or Entrained Noble Gas Limit (2.00E-04 µCi/ml)	%	No Releases	No Releases	No Releases	No Releases	

(1) Concentrations less than the lower limit of detection of the counting system used are indicated with a double asterisk.

ATTACHMENT 5

Unit 1 X Unit 2 _____ Reporting Period January - December 2012

LIQUID EFFLUENTS RELEASED

Nuclides Released		Batch Mode (1),(2) 1st Quarter	2nd Quarter	3rd Quarter	4th Quarter
Nuclides Released					
Strontium-89	Ci	No Releases	No Releases	No Releases	No Releases
Strontium-90	Ci	No Releases	No Releases	No Releases	No Releases
Cesium-134	Ci	No Releases	No Releases	No Releases	No Releases
Cesium-137	Ci	No Releases	No Releases	No Releases	No Releases
Iodine-131	Ci	No Releases	No Releases	No Releases	No Releases
Cobalt-58	Ci	No Releases	No Releases	No Releases	No Releases
Cobalt-60	Ci	No Releases	No Releases	No Releases	No Releases
Iron-59	Ci	No Releases	No Releases	No Releases	No Releases
Zinc-65	Ci	No Releases	No Releases	No Releases	No Releases
Manganese-54	Ci	No Releases	No Releases	No Releases	No Releases
Chromium-51	Ci	No Releases	No Releases	No Releases	No Releases
Zirconium-95	Ci	No Releases	No Releases	No Releases	No Releases
Niobium-95	Ci	No Releases	No Releases	No Releases	No Releases
Molybdenum-99	Ci	No Releases	No Releases	No Releases	No Releases
Barium-140	Ci	No Releases	No Releases	No Releases	No Releases
Lanthanum-140	Ci	No Releases	No Releases	No Releases	No Releases
Cerium-141	Ci	No Releases	No Releases	No Releases	No Releases
Iodine-133	Ci	No Releases	No Releases	No Releases	No Releases
Iron-55	Ci	No Releases	No Releases	No Releases	No Releases
Cerium-144	Ci	No Releases	No Releases	No Releases	No Releases
Cesium-136	Ci	No Releases	No Releases	No Releases	No Releases
Copper-64	Ci	No Releases	No Releases	No Releases	No Releases
Manganese-56	Ci	No Releases	No Releases	No Releases	No Releases
Nickel-65	Ci	No Releases	No Releases	No Releases	No Releases
Sodium-24	Ci	No Releases	No Releases	No Releases	No Releases
Dissolved or Entrained Gases	Ci	No Releases	No Releases	No Releases	No Releases
Tritium	Ci	No Releases	No Releases	No Releases	No Releases

(1) No continuous mode release occurred during the report period as indicated by effluent sampling. There were no Radwaste Batch Releases.

(2) Concentrations less than the lower limit of detection of the counting system used have been verified for sampled effluents. A lower limit of detection of 5.00E-07 µCi/ml for required gamma emitting nuclides, 1.00E-05 µCi/ml for required dissolved and entrained noble gases and tritium, 5.00E-08 µCi/ml for Sr-89/90, 1.00E-06 µCi/ml for I-131 and Fe-55, and 1.00E-07 µCi/ml for gross alpha radioactivity, as identified in the ODCM, has been verified. Concentrations less than the lower limit of detection of the counting system used are indicated with a double asterisk.

ATTACHMENT 6

Unit 1 X Unit 2 _____ Reporting Period January - December 2012

SOLID WASTE AND IRRADIATED FUEL SHIPMENTS

A1. TYPE	Volume (m^3) Class			Activity (1) (Ci) Class		
	A	B	C	A	B	C
a.1 Spent Resin (Dewatered)	9.91E+00	0.00E+00	0.00E+00	7.76E+00	0.00E+00	0.00E+00
a.2 Filter Sludge	0.00E+00	0.00E+00	0.00E+00	0.00E+00	0.00E+00	0.00E+00
a.3 Concentrated Waste	0.00E+00	0.00E+00	0.00E+00	0.00E+00	0.00E+00	0.00E+00
Totals	9.91E+00	0.00E+00	0.00E+00	7.76E+00	0.00E+00	0.00E+00
b.1 Dry Compressible Waste	1.73E+02	0.00E+00	0.00E+00	1.47E-01	0.00E+00	0.00E+00
b.2 Dry Non-Compressible Waste (Contaminated Equipment)	0.00E+00	0.00E+00	0.00E+00	0.00E+00	0.00E+00	0.00E+00
Totals	1.73E+02	0.00E+00	0.00E+00	1.47E-01	0.00E+00	0.00E+00
c. Irradiated Components, Control Rods, etc.	0.00E+00	0.00E+00	0.00E+00	0.00E+00	0.00E+00	0.00E+00
d. Other (to vendor for processing)						
d.1 Carbon, Roof Grit, Tank/Sump Sediment	2.40E+01	0.00E+00	0.00E+00	3.04E+01	0.00E+00	0.00E+00

(1) The estimated total error is 5.0E+01%.

ATTACHMENT 6

Unit 1 X Unit 2 _____ Reporting Period January - December 2012

SOLID WASTE AND IRRADIATED FUEL SHIPMENTS

A1. TYPE	Container	Package	Solidification Agent
a.1 Spent Resin (Dewatered)	Poly Liner	General Design	None
a.2 Filter Sludge	N/A	N/A	N/A
b.1 Dry Compressible Waste	Seavan	General Design	None
b.2 Dry Non-Compressible Waste (contaminated equipment)	N/A	N/A	N/A
c. Irradiated Components, Control Rods	N/A	N/A	N/A
d. Other (To vendor for processing)			
d.1 Carbon, Roof Grit, Tank/Sump Sediment	Seavan, Steel Drum, Poly Liner	General Design	None

ATTACHMENT 6

Unit 1 X Unit 2 _____ Reporting Period January - December 2012

SOLID WASTE AND IRRADIATED FUEL SHIPMENTS

A2. ESTIMATE OF MAJOR NUCLIDE COMPOSITION (BY TYPE OF WASTE)

a. Spent Resins, Filter Sludges, Concentrated Waste

Nuclide	Percent
Co-60	90.1
Cs-137	5.2
Mn-54	2.1
C-14, Fe-55, Ni-63, Zn-65, Ce-144	2.6

b. Dry Compressible Waste, Dry Non-Compressible Waste (Contaminated Equipment)

Nuclide	Percent
Fe-55	65.9
Co-60	28.7
Mn-54	1.8
Ni-63	1.4
Cs-137	1.0
H-3, Cr-51, Fe-59, Co-58, Zn-65, Sr-89, Sr-90, Sb-124, Ce-144, Pu-238, Pu-239, Pu-241, Am-241, Cm-242, Cm-243	1.2

c. Irradiated Components, Control Rods: There were no shipments.

Nuclide	Percent
N/A	N/A

d. Other: (To vendor for processing)

1. Carbon, Roof Grit, Tank/Sump Sediment

Nuclide	Percent
Fe-55	67.5
Co-60	28.5
Mn-54	1.5
H-3, Cr-51, Co-58, Fe-59, Ni-63, Zn-65, Sr-89, Sr-90, Sb-124, Sb-125, Cs-134, Cs-137, Ce-144, Pu-238, Pu-239, Pu-241, Am-241, Cm-242, Cm-243	2.6

ATTACHMENT 6

Unit 1 X **Unit 2** _____ **Reporting Period** January - December 2012

SOLID WASTE AND IRRADIATED FUEL SHIPMENTS

A3. SOLID WASTE DISPOSITION

Number of Shipments	Mode of Transportation	Destination
4	Hittman Transport	Duratek Services, Inc
3	R & R Trucking/AATCO	Studsvik Processing Facility Memphis, LLC
3	Hittman Transport	Studsvik Processing Facility, LLC

B. IRRADIATED FUEL SHIPMENTS (Disposition)

Number of Shipments	Mode of Transportation	Destination
0	N/A	N/A

D. SEWAGE WASTES SHIPPED TO A TREATMENT FACILITY FOR PROCESSING AND BURIAL

There were no shipments of sewage sludge with detectable quantities of plant-related nuclides from NMP to the treatment facility during the reporting period.

ATTACHMENT 7

Unit 1 X Unit 2 _____ Reporting Period January - December 2012

SUMMARY OF CHANGES TO THE OFF-SITE DOSE CALCULATION MANUAL (ODCM)

The Unit 1 Off-Site Dose Calculation Manual (ODCM) was revised twice during the reporting period. Revision 33 included an enhancement with regard to gaseous effluent sampling, the identification of the new Independent Spent Fuel Storage Installation (ISFSI) as a potential source of radiation, and changed the name of an offsite sample location. Revision 34 added a surveillance requirement for the Reactor Building Perimeter Drains. These changes do not affect the levels of radioactive effluent control required by 10 CFR 20.1302, 40 CFR 190, 10 CFR 50.36a, and 10 CFR 50 Appendix I, and does not adversely impact the accuracy or reliability of effluent, dose, or setpoint calculations. Copies of ODCM, Revision 33 and Revision 34 are attached (Attachment 13 and Attachment 14), and a summary of the changes is provided below. The summary also includes the justification for the change.

REVISION 33

Page #	New/Amended Section #	Description of Change	Reason For Change
I 3.1-10	Table D 3.6.14-2	Footnote (b) was revised to add "When OGESMS and the auxiliary sampling equipment are both non-functional, Attachment 3 of Chemistry procedure N1-CSP-V304 may be used for obtaining continuous particulate and iodine samples.	This is an enhancement.
I 3.1-25	3/4.6.15	ISFSI	Independent Spent Fuel Storage Installation added to site and identified as a potential source of radiation.
I B 3.1-7	B 3/4.6.15	ISFSI	
II 10	1.3.1	ISFSI	
II 28	3	ISFSI	
II 30	3.3 & 3.4	ISFSI	
II 32	3.4	ISFSI	
II 69	Table 5.1	Map Location 33 changed from Alcan to Novelis	Company name change

REVISION 34

Page #	New/Amended Section #	Description of Change	Reason For Change
I 3.1-16	Table D 4.6.15-1	Added Surveillance Requirement to sample Reactor Building Perimeter Drain	In August 2012, Tritium was identified in the groundwater adjacent to Unit 1. Investigations determined that the source of this radioactivity was deposition of discharges from the Emergency Condenser Vents. As such, this radioactivity had already been accounted for in past RERRs. This surveillance was added as a confirmatory measure.
I B 3.1-2	3/4.6.15	Added the rational for the Surveillance Requirement to sample Reactor Building Perimeter Drain	
II 7	1.1.4.6	Added new section for Reactor Building Perimeter Drain Discharges	
II 74	Figure 5.1.3-1	Added Outfall 020 to the figure	

ATTACHMENT 8

Unit 1 X Unit 2 _____ Reporting Period January - December 2012

SUMMARY OF CHANGES TO THE PROCESS CONTROL PROGRAM (PCP)

There were no changes to the NMP1 Process Control Program (PCP) during the reporting period.

ATTACHMENT 9

Unit 1 X Unit 2 _____ Reporting Period January - December 2012

SUMMARY OF NON-FUNCTIONAL MONITORS

Monitor	Dates Monitor was Non-Functional	Cause and Corrective Actions
Liquid Radwaste Discharge Monitors 11 and 12	January 1, 2012 to December 31, 2012	These monitors were intentionally allowed to exceed their quarterly functional test and annual calibration frequency, as no discharges are planned or expected. This condition is allowed as long as blank flanges are installed in the discharge line, precluding any unmonitored discharge. No liquid waste discharges were performed during 2012. This non-functionality is tracked in ESL 2006-0192.

ATTACHMENT 10

Unit 1 __X__ Unit 2 _____ Reporting Period: **January - December 2012**

DOSES TO MEMBERS OF THE PUBLIC DUE TO THEIR ACTIVITIES INSIDE THE SITE BOUNDARY

Introduction

An assessment of the radiation dose potentially received by a Member of the Public due to their activities inside the site boundary from Nine Mile Point Unit 1 (NMP1) liquid and gaseous effluents has been conducted for the period January through December 2012.

This assessment considers the maximum exposed individual and the various exposure pathways resulting from liquid and gaseous effluents to identify the maximum dose received by a Member of the Public during their activities within the site boundary.

Prior to September 11, 2001, the public had access to the Energy Information Center for purposes of observing the educational displays or for picnicking and associated activities. Fishing also occurred near the shoreline adjacent to the Nine Mile Point (NMP) site. Fishing near the shoreline adjacent to the NMP site was the onsite activity that resulted in the potential maximum dose received by a Member of the Public. Following September 11, 2001 public access to the Energy Information Center has been restricted and fishing by Members of the Public at locations on site is also prohibited. Although fishing was not conducted during 2012, the annual dose to a hypothetical fisherman was still evaluated to provide continuity of data for the location.

Dose Pathways

Dose pathways considered for this evaluation included direct radiation, inhalation and external ground (shoreline sediment or soil doses). Other pathways, such as ingestion pathways, are not considered because they are either not applicable, insignificant, or are considered as part of the evaluation of the total dose to a member of the public located off-site. In addition, only releases from the NMP1 stack and emergency condenser vent were evaluated for the inhalation pathway. Dose due to aquatic pathways such as liquid effluents is not applicable since swimming is prohibited at the NMP site.

Dose to a hypothetical fisherman is received through the following pathways while standing on the shoreline fishing:

- External ground pathway; this dose is received from plant related radionuclides detected in the shoreline sediment.
- Inhalation pathway; this dose is received through inhalation of gaseous effluents released from the NMP1 Stack and Emergency Condenser Vent.
- Direct radiation pathway; dose resulting from the operation of NMP1, Nine Mile Point Unit 2 (NMP2) and the James A. Fitzpatrick Nuclear Power Plant (JAFNPP) Facilities.

Methodologies for Determining Dose for Applicable Pathways

External Ground (Shoreline Sediment) Pathway

Dose from the external ground (shoreline sediment) is based on the methodology in the NMP1 Offsite Dose Calculation Manual (ODCM) as adapted from Regulatory Guide 1.109. For this evaluation it is assumed that the hypothetical maximum exposed individual fished from the shoreline at all times.

Unit 1 __X__ Unit 2 _____ Reporting Period: **January - December 2012**

DOSES TO MEMBERS OF THE PUBLIC DUE TO THEIR ACTIVITIES INSIDE THE SITE BOUNDARY

The total dose received by the whole body and skin of the maximum exposed individual during 2012 was calculated using the following input parameters:

- Usage Factor = 312 hours (fishing 8 hours per week, 39 weeks per year)
- Density in grams per square meter = 40,000
- Shore width factor = 0.3
- Whole body and skin dose factor for each radionuclide = Regulatory Guide 1.109, Table E-6.
- Fractional portion of the year = 1 (used average radionuclide concentration over total time period)
- Average Cs-137 concentration = 1.59E-01 pCi/g

The total whole body and skin doses received by a hypothetical maximum exposed fisherman from the external ground pathway is presented in Table 1, Exposure Pathway Annual Dose.

Inhalation Pathway

The inhalation dose pathway is evaluated by utilizing the inhalation equation in the NMP1 ODCM, as adapted from Regulatory Guide 1.109. The total whole body dose and organ dose received by the hypothetical maximum exposed fisherman during 2012 calculated using the following input parameters for gaseous effluents released from both the NMP1 Stack and Emergency Condenser Vent for the time period exposure is received:

NMP 1 Stack:

Variable	Fisherman [1]
X/Q (s/m^3)	8.90E-06
Inhalation dose factor	Table E-7, Regulatory Guide 1.109
Annual air intake (m^3/year) (adult)	8000
Fractional portion of the year	0.0356
H-3 (pCi/sec)	6.05 E+05
C-14 (pCi/sec)[2]	3.38 E+05
Cr-51 (pCi/sec)	3.23 E+00
Mn-54 (pCi/sec)	1.18 E+00
Fe-55 (pCi/sec)	6.59 E+01
Co-58 (pCi/sec)	3.58 E-01
Co-60 (pCI/sec)	2.29 E+01
I-131 (pCi/sec)	7.75 E+00
I-133 (pCi/sec)	1.29 E+02

Unit 1 __X__ Unit 2 _____ Reporting Period: **January - December 2012**

DOSES TO MEMBERS OF THE PUBLIC DUE TO THEIR ACTIVITIES INSIDE THE SITE BOUNDARY

NMP1 Emergency Condenser Vent:

Variable	Fisherman [1]
X/Q (s/m^3)	6.63E-06
Inhalation dose factor	Table E-7, Regulatory Guide 1.109
Annual air intake (m^3/year) (adult)	8000
Fractional portion of the year	0.0356
H-3 (pCi/sec)	1.53 E+05

1 The maximum exposed fisherman is assumed to be present on site during the period of April through December at a rate of 8 hours per week for 39 weeks per year equivalent to 312 hours for the year (fractional portion of the year = 0.0356). Therefore, the Average Stack and Emergency Condenser Vent flow rates and radionuclide concentrations used to determine the dose are represented by second, third and fourth quarter gaseous effluent flow and concentration values.

2 C-14 release rate determined from NUREG-0016, "Calculation of Releases of Radioactive Materials in Gaseous and Liquid Effluents for Boiling Water Reactors (BWR-GALE Code)," and EPRI Technical Report 1021106, "Estimation of Carbon-14 in Nuclear Power Plant Gaseous Effluents."

The total whole body dose and maximum organ dose received by the hypothetical maximum exposed fisherman is presented in Table 1, Exposure Pathway Annual Dose.

Direct Radiation Pathway

The direct radiation pathway is evaluated in accordance with the methodology found in the NMP1 ODCM. This pathway considers four components: direct radiation from the generating facilities, direct radiation from any possible overhead plume, direct radiation from ground deposition and direct radiation from plume submersion. The direct radiation pathway is evaluated by the use of high sensitivity environmental Thermoluminescent Dosimeters (TLDs). Since fishing activities occur between April 1 and December 31, TLD data for the second, third, and fourth quarters of 2012 from TLDs placed in the general area where fishing once occurred were used to determine an average dose to the hypothetical maximum exposed fisherman from direct radiation. The following is a summary of the average dose rate and assumed time spent on site used to determine the total dose received:

Variable	Fisherman
Average Dose Rate (mRem/hr)	1.69 E-03
Exposure time (hours)	312

Total doses received by the hypothetical maximum exposed fisherman from direct radiation is presented in Table 1, Exposure Pathway Annual Dose.

ATTACHMENT 10

Unit 1 X Unit 2 _____ Reporting Period: January - December 2012

DOSES TO MEMBERS OF THE PUBLIC DUE TO THEIR ACTIVITIES INSIDE THE SITE BOUNDARY

Dose Received By A Hypothetical Maximum Exposed Member of the Public Inside the Site Boundary During 2012

The following is a summary of the dose received by a hypothetical maximum exposed fisherman from liquid and gaseous effluents released from NMP1 during 2012:

TABLE 1
Exposure Pathway Annual Dose

Exposure Pathway	Dose Type	Fisherman (mrem)
External Ground	Whole Body	2.51 E-03
	Skin of Whole Body	2.92 E-03
Inhalation	Whole Body	6.50 E-04
	Maximum Organ	Bone: 1.94 E-03
	Thyroid	6.50 E-04
Direct Radiation	Whole Body	0.53

Based on these values the total annual dose received by a hypothetical maximum exposed Member of the Public inside the site boundary is as follows:

TABLE 2
Annual Dose Summary

Total Annual Dose for 2012	Fisherman (mrem)
Total Whole Body	5.29 E-01
Skin of Whole Body	2.92 E-03
Maximum Organ	Bone: 1.94 E-03
Thyroid	6.50 E-04

ATTACHMENT 11

Unit 1 X Unit 2 _____ Reporting Period: **January - December 2012**

DOSES TO MEMBERS OF THE PUBLIC DUE TO THEIR ACTIVITIES OUTSIDE THE SITE BOUNDARY

Introduction

An assessment of radiation doses potentially received by the likely most exposed Member of the Public located beyond the site boundary was conducted for the period January through December 2012 for comparison against the 40 CFR 190 annual dose limits.

The intent of 40 CFR 190 requires that the effluents of Nine Mile Point Unit 1 (NMP1), as well as other nearby uranium fuel cycle facilities, be considered. In this case, the effluents of NMP1, Nine Mile Point Unit 2 (NMP2) and the James A. FitzPatrick Nuclear Power Plant (JAFNPP) facilities must be considered.

40 CFR 190 requires the annual radiation dose received by Members of the Public in the general environment, as a result of plant operations, be limited to:

- < 25 mRem wholebody
- < 25 mRem any organ (except thyroid)
- < 75 mRem thyroid

This evaluation compares doses resulting from liquid and gaseous effluents and direct radiation originating from the site as a result of the operation of the NMP1, NMP2 and JAFNPP nuclear facilities.

Dose Pathways

Dose pathways considered for this evaluation included doses resulting from liquid effluents, gaseous effluents and direct radiation from all nuclear operating facilities located on the Nine Mile Point site.

Dose to the likely most exposed Member of the Public, outside the site boundary, is received through the following pathways:

- Fish consumption pathway; this dose is received from plant radionuclides that have concentrated in fish that is consumed by a Member of the Public.
- Vegetation consumption pathway; this dose is received from plant radionuclides that have concentrated in vegetation that is consumed by a Member of the Public.
- Shoreline Sediment; this dose is received as a result of an individual's exposure to plant radionuclides deposited in the shoreline sediment, which is used as a recreational area.
- Deposition, Inhalation and Ingestion pathways resulting from gaseous effluents; this dose is received through exposure to gaseous effluents released from NMP1, NMP2 and JAFNPP operating facilities.
- Direct Radiation pathway; radiation dose resulting from the operation of NMP1, NMP2 and JAFNPP facilities (including the Independent Spent Fuel Storage Installations (ISFSI)).

Methodologies for Determining Dose for Applicable Pathways

Fish Consumption

Dose received as a result of fish consumption is based on the methodology specified in the NMP1 Off-Site Dose Calculation Manual (ODCM) as adapted from Regulatory Guide 1.109. The dose for 2012 is calculated from actual analysis results of environmental fish samples taken near the site discharge points. For this evaluation it is assumed that the most likely exposed Member of the Public consumes fish taken near the site discharge points.

No radionuclides were detected in fish samples collected and analyzed during 2012; therefore, no dose was received by the whole body and organs of the likely most exposed Member of the Public during 2012.

Unit 1 X Unit 2 _____ Reporting Period: **January - December 2012**

DOSES TO MEMBERS OF THE PUBLIC DUE TO THEIR ACTIVITIES OUTSIDE THE SITE BOUNDARY

Vegetation Consumption

Dose received as a result of vegetation consumption is based on the methodology specified in the NMP1 ODCM as adapted from Regulatory Guide 1.109. The dose for 2012 is calculated from actual analysis results of environmental vegetation samples taken near the most exposed Member of the Public.

No radionuclides were detected in vegetation samples collected and analyzed during 2012; therefore, no dose was received by the whole body and organs of the likely most exposed Member of the Public during 2012.

For estimating C-14, dose received as a result of vegetation consumption is based on the methodology specified in the NMP1 ODCM as adapted from Regulatory Guide 1.109. The estimated concentration of C-14 in vegetation is based on the estimated concentration of C-14 in plant gaseous effluents.

Shoreline Sediment

Dose received from shoreline sediment is based on the methodology in the NMP1 ODCM as adapted from Regulatory Guide 1.109. For this evaluation it is assumed that the most likely exposed Member of the Public spends 67 hours/year along the shoreline for recreational purposes.

No radionuclides were detected in shoreline sediment samples collected and analyzed during 2012; therefore no dose was received by the whole body and organs of the likely most exposed Member of the Public during 2012.

Dose Pathways Resulting From Gaseous Effluents

Dose received by the likely most exposed Member of the Public due to gaseous effluents is calculated in accordance with the methodology provided in the NMP1 ODCM, NMP2 ODCM, and the JAFNPP ODCM. These calculations consider deposition, inhalation and ingestion pathways. The total sum of doses resulting from gaseous effluents from NMP1, NMP2 and JAFNPP during 2012 provides a total dose to the whole body and maximum organ dose for this pathway.

Carbon-14 Dose Pathways Resulting from Gaseous Effluents

The Carbon-14 (C-14) effluent source terms are used to estimate radiological doses from C-14 in site gaseous waste effluents. These estimates were generated in order to meet the NRC requirement to incorporate C-14 in nuclear power plant 2012 Annual Radiological Effluent Release Reports (ARERRs). The C-14 production and effluent source term estimates were based on EPRI methodology provided in EPRI Report 1021106, *Estimation of Carbon-14 in Nuclear Power Plant Gaseous Effluents, December 2010.* The following methodology was used in estimating C-14 gaseous release activity and dose components for the 2012 ARERR.

EPRI methodology for estimating C-14 production rates in Boiling Water Reactors (BWRs):

For BWRs, EPRI Report 1021106 summarized the distribution of C-14 in release pathways as follows: gaseous 95% to 99%, liquid <0.5% and solid 1% to 5%. The report also states that ~95% of C-14 in BWR gaseous waste effluents exists in the carbon dioxide form, which contributes to population dose via photosynthesis uptake in the food consumption cycle.

Unit 1 __X__ Unit 2 _____ Reporting Period: **January - December 2012**

DOSES TO MEMBERS OF THE PUBLIC DUE TO THEIR ACTIVITIES OUTSIDE THE SITE BOUNDARY

For NMP1 and NMP2, C-14 gaseous dose calculations in the site ARERR are made using the following assumptions for each unit: (1) continuous release of the estimated C-14 generated during power operation based on the number of Effective Full Power Days (EFPDs) for the period, (2) maximum C-14 activity from literature values cited in EPRI Report 1021106, and (3) typical fraction as carbon dioxide for gaseous releases from literature values also cited in EPRI Report 1021106.

Equation 1 estimates the maximum annual production of C-14, PR_{MAX}, for each BWR unit.

$$PR_{MAX} = 5.1 \bullet MWT / 1000 \qquad \textit{[Eq 1]}$$

Where:

5.1	=	BWR Normalized Production (Ci/GWt–yr)
MWT	=	MegaWatts Thermal (MWt)
1000	=	Conversion Factor (MWt to GWt)

Equation 2 estimates the C-14 activity released, $A_{C\text{-}14}$, into the gaseous pathway during the time period for each BWR unit.

$$A_{C\text{-}14} = PR_{MAX} \bullet 0.99 \bullet EFPD / 365, \text{ Ci (for time period)} \qquad \textit{[Eq 2]}$$

Where:

PR_{MAX}	=	maximum annual production rate of C-14
0.99	=	fraction of C-14 in BWR gaseous pathway releases (maximum literature value in EPRI Report 1021106; also Table 1)
EFPD	=	number of effective full power days for the unit during the time period; e.g., quarterly or yearly (Table 1)
365	=	number of days in a typical year

Unit 1 X Unit 2 _____ Reporting Period: January - December 2012

DOSES TO MEMBERS OF THE PUBLIC DUE TO THEIR ACTIVITIES OUTSIDE THE SITE BOUNDARY

Equation 3 estimates the C-14 activity released in carbon dioxide form, $A_{C\text{-}14,\ CO2}$, into the gaseous pathway during the time period for each BWR unit.

$$A_{C\text{-}14,\ CO2} = PR_{MAX} \bullet 0.99 \bullet 0.95 \bullet EFPD / 365,\ Ci\ (for\ time\ period) \qquad [Eq\ 3]$$

Where:

PR_{MAX}	=	maximum annual production rate of C-14
0.99	=	fraction of C-14 in BWR gaseous pathway releases (maximum literature value in EPRI Report 1021106; also Table 1)
0.95	=	fraction of C-14 as carbon dioxide in BWR gaseous pathway releases (typical literature value in EPRI Report 1021106; also Table 1)
EFPD	=	number of effective full power days for the unit during the time period, e.g. quarterly or yearly (Table 1)
365	=	conversion factor, 365 days in a typical average year

For each BWR unit, the 2012 estimated C-14 activity releases (total and carbon dioxide chemical form) are summarized in Table 1.

Table 1
2012 BWR Estimated C-14 Gaseous Releases

BWR	Gaseous Release Fraction[(a)]	CO_2 Form Release Fraction[(b)]	EFPD Operation	Max. Annual Prod. Rate (Eq 1)	2012 Total Release (Eq 2)	2012 CO_2 Release (Eq 3)
NMP1	0.99	0.95	328 EFPD (89.9%)	9.44 Ci/yr	8.39 Ci	7.97 Ci
NMP2	0.99	0.95	295 EFPD (80.8%)	20.34 Ci/yr[(c)]	16.27 Ci	15.5 Ci
JAFNPP	0.99	0.95	303 EFPD (83.0%)	10.84 Ci/yr	8.89 Ci	8.45 Ci

(a) Maximum literature values from EPRI Report 1021106.
(b) Typical value from EPRI Report 1021106.
(c) NMP2 Reactor Power Rating increased to 3988 Megawatts thermal.

As long as the core designs and power ratings are not significantly changed, the maximum annual production rates and annual total and carbon dioxide activity releases in Table 1 should be acceptable for use in estimating C-14 gaseous release activity and dose components for the ARERR.

Unit 1 X Unit 2 _____ Reporting Period: January - December 2012

DOSES TO MEMBERS OF THE PUBLIC DUE TO THEIR ACTIVITIES OUTSIDE THE SITE BOUNDARY

Direct Radiation Pathway

Dose as a result of direct gamma radiation from the site, encompasses doses from direct "shine" from the generating facilities, direct radiation from any overhead gaseous plumes, plume submersion, and ground deposition. This total dose is measured by environmental TLDs. The critical location is based on the closest year-round residence from the generating facilities as well as the closest residence in the critical downwind sector in order to evaluate both direct radiation from the generating facilities and gaseous plumes as determined by the local meteorology. During 2012, the closest residence and the critical downwind residence are at the same location.

Table 2

Dose Potentially Received by the Likely Most Exposed Member of the Public Outside the Site Boundary During 2012

Exposure Pathway	Dose Type	Dose (mrem)
Fish and Vegetation Consumption	Total Whole Body	No Dose
	Total Maximum Organ	No Dose
Shoreline Sediment	Total Whole Body	No Dose
	Total Skin of Whole Body	No Dose
Gaseous Effluents (excluding C-14)	Total Whole Body	6.45 E-04
	Thyroid	9.48 E-04
	Maximum Organ	Lung: 7.19 E-04
Gaseous Effluent (C-14)	Total Whole Body	4.08 E-02
	Maximum Organ	Bone: 2.04 E-01
Direct Radiation	Total Whole Body	3.9

Based on these values the maximum total annual dose potentially received by the likely most exposed Member of the Public during 2012 is as follows:

- Total Whole Body: 4.0 E+00 mrem
- Total Thyroid: 9.48 E-04 mrem
- Maximum Organ: Bone: 2.04 E-01 mrem

40 CFR 190 Evaluation

The maximum total doses presented in this attachment are the result of operations at the NMP1, NMP2 and the JAFNPP facilities. The maximum organ dose (Bone: 0.204 mrem), maximum thyroid dose (0.0009 mrem) and the maximum whole body dose (4.0 mrem) are below the 40 CFR 190 criteria of 25 mrem per calendar year to the maximum exposed organ or the whole body, and below 75 mrem per calendar year to the thyroid.

ATTACHMENT 12

GROUNDWATER MONITORING DATA

Reporting Period January - December 2012

CONCENTRATION OF TRITIUM IN GROUNDWATER SAMPLES (pCi/l)

Date	GMX-MW1*	MW-B119*	MW-1	MW-5	MW-6	MW-7	MW-8	MW-9(2)	MW-10(2)	MW-11
2/7/2012			<386	<386						<386
2/8/2012	<386				<386	<386	<386			
2/9/2012		<386								
5/1/2012		<406	<392	<406						<392
5/2/2012	<392				<406	<406	<406			
7/30/2012	<393	<373	<372	<372				<372	<372	<372
7/31/2012					<372	<372	<372			
8/19/2012	<480	<487								
8/20/2012			<463	<486				<482	<482	
8/21/2012					<481	<479	<480			<483
8/27/2012	<499	<499								
8/28/2012			<499	<499	<442	<442	<442	<499	<499	<499
9/4/2012					<442	<442	<442			
9/10/2012					<430	<430	<367			
9/17/2012					<402	<402	<402			
9/24/2012					<375	<375	<375			
10/2/2012					<415					
10/4/2012						<415	<415			
10/15/2012	<387	<387								
10/16/2012			<363	<387				<387	<387	<363
10/17/2012					<387					
10/18/2012						<387	<387			
10/24/2012					<363					
10/25/2012						<363	<363			
11/1/2012			<316							
11/12/2012					<345	<345	<345			
11/13/2012										
12/5/2012						<314	<314			
12/6/2012					<314					

Notes: * Control Location

(1) New well locations

(2) Sentinel well location

ATTACHMENT 12

GROUNDWATER MONITORING DATA

Reporting Period January - December 2012

CONCENTRATION OF TRITIUM IN GROUNDWATER SAMPLES (pCi/l)

Date	MW-12	MW-13	MW-14*(1)	MW-15(1)	MW-16(1)	MW-17(1)	MW-18(1)	MW-19(1)	MW-20(1)	MW-21(1,2)
2/7/2012	<386	<386								
5/1/2012	<406	<406								
5/2/2012			<406							
7/30/2012	<373		<373							
7/31/2012		<373								
8/19/2012		<480								
8/20/2012	<478		<481							
8/27/2012		<499								
8/28/2012	<499		<499							
9/10/2012										<367
9/17/2012										<402
9/24/2012				<375		<375				<375
10/2/2012					<415	<415	<415			
10/4/2012				<415				<415	<415	<415
10/15/2012		<363								<387
10/16/2012	<363								<387	
10/17/2012					<387	<387	<387	<387		
10/18/2012			<363	<363						
10/24/2012					<363	<363	<363	<363	<363	<363
10/26/2012				<363						
11/12/2012						<345				
11/13/2012				<345	<345		<345			
12/5/2012					<314	<314	<416			

NMP2 Groundwater Depression Cone (pCi/l)(3)							
1/3/2012	<415		8/27/2012	<419		10/11/2012	<345
4/2/2012	<400		8/30/2012	399 +/- 115		10/15/2012	<345
6/4/2012	402 +/- 117		9/4/2012	<499		10/29/2012	<386
6/11/2012	<370		9/7/2012	<430		11/5/2012	467 +/- 116
7/2/2012	<386		9/10/2012	<430		11/12/2012	<416
7/16/2012	<298		9/13/2012	<440		11/19/2012	<416
7/23/2012	<298		9/17/2012	<440		11/26/2012	908 +/- 208
7/30/2012	<393		9/21/2012	<440		12/3/2012	<416
8/7/2012	<298		9/27/2012	<379		12/31/2012	<376
8/13/2012	584 +/- 114		10/1/2012	<379			
8/20/2012	<389		10/4/2012	<328			
8/23/2012	<389		10/8/2012	<328			

Notes: * Control Location

(1) New well locations

(2) Sentinel well location

(3) Samples collected from storm drain system, which include precipitation

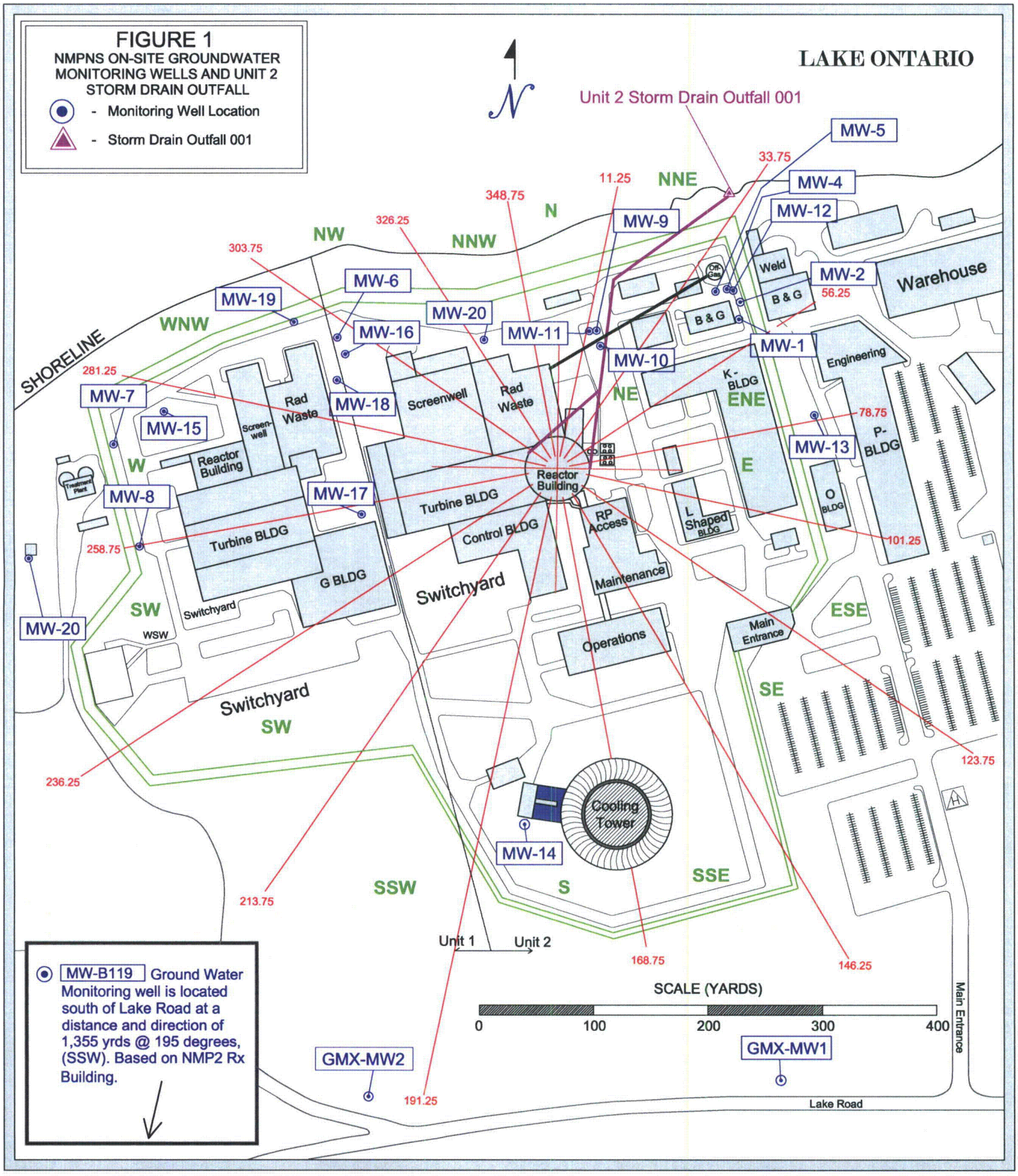
FIGURE 1
NMPNS ON-SITE GROUNDWATER MONITORING WELLS AND UNIT 2 STORM DRAIN OUTFALL
- Monitoring Well Location
- Storm Drain Outfall 001
LAKE ONTARIO
N
Unit 2 Storm Drain Outfall 001
MW-5
MW-4
MW-12
MW-9
MW-2
MW-6
MW-19
MW-20
MW-16
MW-11
MW-10
MW-1
MW-7
MW-15
MW-18
MW-13
MW-8
MW-17
MW-20
MW-14
GMX-MW2
GMX-MW1
33.75
11.25
348.75
326.25
303.75
56.25
281.25
78.75
258.75
101.25
236.25
123.75
213.75
168.75
146.25
191.25
NNE
N
NW
NNW
WNW
W
SW
WSW
SSW
S
SSE
SE
ESE
E
ENE
NE
SHORELINE
Warehouse
Weld
B & G
Engineering
K-BLDG
P-BLDG
O BLDG
L Shaped BLDG
Rad Waste
Screen-well
Screenwell
Reactor Building
Turbine BLDG
G BLDG
Control BLDG
RP Access
Maintenance
Operations
Main Entrance
Switchyard
Cooling Tower
Treatment Plant
Off-Gas
Unit 1
Unit 2
SCALE (YARDS)
0
100
200
300
400
Lake Road
Main Entrance
MW-B119 Ground Water Monitoring well is located south of Lake Road at a distance and direction of 1,355 yrds @ 195 degrees, (SSW). Based on NMP2 Rx Building.

Unit 1 X Unit 2 _____ Reporting Period January - December 2012

Off-Site Dose Calculation Manual (ODCM)

Revision 33

Constellation Energy
Nine Mile Point Nuclear Station

NINE MILE POINT NUCLEAR STATION

NINE MILE POINT UNIT 1

OFF-SITE DOSE CALCULATION MANUAL (ODCM)

REVISION 33

APPROVALS	SIGNATURES	DATE
Prepared by:	G. R. Stinson Principle Chemist	6/4/12
Reviewed by:	C. L. Widay-Poindexter Supervisor-Chemistry Support	6/20/12

M. R. Faivus	C. Widay Poindexter for M. Faivus per telecon General Supervisor - Chemistry	6/20/12
M. A. Philippon	M. A. Philippon Plant General Manager	6/22/12

SUMMARY OF REVISIONS

Revision 33 (Effective June 2012)

PAGE	*DATE*
1, 2, 5, 6, 8, 9, 11-13/15-18, 21, 24, 25, 36-44, 47-49, 52-81, 86-116	February 1987
3, 4, 7, 10, 14, 19, 20, 22, 23, 26-35	December 1987
45, 46, 50, 51, 82-85	January 1988
*29	May 1988 (Reissue)
*64, 77, 78	May 27, 1988 (Reissue)
i, 19, 21, 22A, 22B, 124, 25, 26, 112 i, ii, iii, 12-16, 18, 28-40, 45-47	February 1990
52, 55, 59-89, 92, 93, 97-129	June 1990
91-93, 95	June 1992
3, 4, 21, 92, 95a-c	February 1993
10, 16-20	March 1993
5, 13, 18, 20, 25-30, 65, 79	June 1993
66, 69	December 1993
16, 69	June 1994
10, 12	February 1995
10, 18, 67, 69	December 1995
5, D-1	June 1996
5, D-1	June 1997
5, D-1	April 1999
D-1	December 1999
iv, 3, 6, 8, 9, 11, 13, 14, 27, 29, 65, 66, 69, 69a	December 2001
Added Part I & Revised Part II - II 2-16, II 20-23, II 25, II 26, II 29, II 30	November 2002
iv, v, vii, viii, I 1.0-1 and 2, I 3.1-1, 7 to 9, 11, 14, 18 to 24, 26 and 27, I B 3.1-1, 3 to 7, I 6.0-2, 4, and 5, II 2, II 3, II 4, II 6, II 9 to 11, II 13 to 22, II 42, Figure D-8, Deleted Figures D-7, D-9, D-10	November 2002

SUMMARY OF REVISIONS (continued)

Revision 33 (Effective June 2012)

PAGE	***DATE***
x, I 1.0-1, I 3.1-22, I 3.1-38 and 39, I B 3.1-1, I 6.1-0 and 3, II 11, 12, 17, 18, 24 and 25	**July 2003**
I 3.1-7, I 3.1-8, I 3.1-9, I 3.1-10, I 3.1-11, I 3.1-12 and I B 3.1-1	**February 2004**
II 70, II 71, and II 73	**December 2005**
I 3.1-5, I 3.1-10, II 6, and II 24	**May 2006**
I 1.0-1, I 3.1-1, I 3.1-2, I 3.1-3, I 3.1-4, I 3.1-5, I 3.1-7, I 3.1-8, I 3.1-9, I 3.1-10 I 3.1-11, I 3.1-12, I 3.1-23, I 3.1-27, I 3.1-28, I B 3.1-1, I B 3.1-8, I 6.0-4, II 2, II 5, II 11, II 17, and II 25	**September 2006**
viii, I 3.1-8, I 3.1-20, I 3.1-21, I 3.1-27, II 1, II 15, II 23, II 25, II 36 – II 43, II 45, II 46, II 48 – II 51, II 53, II 55 – II 65, II 67, II 70, II 71, II 78, II 83, II 92	**February 2007**
I 3.1-16, II 68 – II 71, II 73, D-1	**October 2009**
I 6.0-3	**September 2010**
I 3.1-9, I 3.1-12, II 5	**February 2011**
I 3.1-10, I 3.1-25, I B 3.1-7, II 10, II 28, II 30, II 32, II 69	**June 2012**

ODCM - NINE MILE POINT UNIT 1

TABLE OF CONTENTS

PAGE

List of Tables ..... **viii**

List of Figures ..... **ix**

INTRODUCTION ..... **x**

PART I – Radiological Effluent Controls

SECTION 1.0:	**Definitions**	**I 1.0-0**
SECTION 2.0:	**Not Used**	
SECTIONS 3.0/4.0:	**Applicability**	**I 3.0-0**
D 3/4.6.14	**RADIOACTIVE EFFLUENT INSTRUMENTATION**	**I 3.1-1**
D 3/4.6.14.a.	**Liquid Effluent**	**I 3.1-1**
D 3/4.6.14.b	**Gaseous Process and Effluent**	**I 3.1-7**
D 3/4.6.15	**RADIOACTIVE EFFLUENTS**	**I 3.1-14**
D 3/4.6.15.a.(1)	**Liquid Concentration**	**I 3.1-14**
D 3/4.6.15.a.(2)	**Liquid Dose**	**I 3.1-15**
D 3/4.6.15.b.(1)	**Gaseous Dose Rate**	**I 3.1-19**
D 3/4.6.15.b.(2)	**Gaseous Air Dose**	**I 3.1-20**
D 3/4.6.15.b.(3)	**Gaseous Tritium, Iodines and Particulates**	**I 3.1-21**
D 3/4.6.15.d	**Uranium Fuel Cycle**	**I 3.1-24**
D 3/4.6.16	**RADIOACTIVE EFFLUENT TREATMENT SYSTEMS**	**I 3.1-27**
D 3/4.6.16.a	**Liquid**	**I 3.1-27**
D 3/4.6.16.b	**Gaseous**	**I 3.1-27**
D 3/4.6.17	**Not Used**	
D 3/4.6.18	**MARK I CONTAINMENT**	**I 3.1-29**
D 3/4.6.19	**LIQUID WASTE HOLDUP TANKS**	**I 3.1-30**
D 3/4.6.20	**RADIOLOGICAL ENVIRONMENTAL MONITORING PROGRAM**	**I 3.1-31**
D 3/4.6.21	**INTERLABORATORY COMPARISON PROGRAM**	**I 3.1-41**
D 3/4.6.22	**LAND USE CENSUS**	**I 3.1-42**

TABLE OF CONTENTS (Cont)

		PAGE
	BASES	I B 3.1-0
B 3/4.6.14	BASES FOR RADIOACTIVE EFFLUENT INSTRUMENTATION	I B 3.1-1
B 3/4.6.15	BASES FOR RADIOACTIVE EFFLUENTS	I B 3.1-2
	Liquid Concentration	I B 3.1-2
	Liquid Dose	I B 3.1-3
	Gaseous Dose Rate	I B 3.1-4
	Dose-Noble Gases	I B 3.1-5
	Dose-Iodine-131, Iodine-133, Tritium, and Radionuclides in Particulate Form	I B 3.1-6
	Total Dose-Uranium Fuel Cycle	I B 3.1-7
B 3/4.6.16	BASES FOR RADIOACTIVE EFFLUENT TREATMENT SYSTEMS	I B 3.1-8
	Liquid Radwaste Treatment System	I B 3.1-8
	Gaseous Effluent Treatment Systems	I B 3.1-8
B 3/4.6.18	BASES FOR MARK I CONTAINMENT	I B 3.1-9
B 3/4.6.19	BASES FOR LIQUID WASTE HOLDUP TANKS	I B 3.1-9
B 3/4.6.20	BASES FOR RADIOLOGICAL ENVIRONMENTAL MONITORING PROGRAM	I B 3.1-10
B 3/4.6.21	BASES FOR INTERLABORATORY COMPARISON PROGRAM	I B 3.1-11
B 3/4.6.22	BASES FOR LAND USE CENSUS	I B 3.1-12
SECTION 5.0	Not Used	
SECTION 6.0	ADMINISTRATIVE CONTROLS	I 6.0-1
	Reporting Requirements	I 6.0-2
	Special Reports	I 6.0-4

TABLE OF CONTENTS (Cont)

PAGE

PART II – Calculational Methodologies ..... **II 1**

1.0 LIQUID EFFLUENTS ..... **II 2**

1.1 Setpoint Determinations ..... **II 2**

1.1.1 Basis ..... **II 2**

1.1.2 Service Water System Effluent Line Alarm Setpoint ..... **II 2**

1.1.3 Liquid Radwaste Effluent Line Alarm Setpoint ..... **II 3**

1.1.4 Discussion ..... **II 5**

1.1.4.1 Control of Liquid Effluent Batch Discharges ..... **II 5**

1.1.4.2 Simultaneous Discharges of Radioactive Liquids ..... **II 5**

1.1.4.3 Sample Representativeness ..... **II 5**

1.1.4.4 Liquid Radwaste System Operation ..... **II 6**

1.1.4.5 Service Water System Contamination ..... **II 7**

1.2 Liquid Effluent Concentration Calculation ..... **II 7**

1.3 Dose Determinations ..... **II 8**

1.3.1 Maximum Dose Equivalent Pathway ..... **II 8**

1.3.2 Dose Projections – Determination of Need to Operate the Liquid Radwaste Treatment System ..... **II 11**

2.0 GASEOUS EFFLUENTS ..... **II 12**

2.1 Setpoint Determinations ..... **II 12**

2.1.1 Basis ..... **II 12**

2.1.2 Stack Monitor Setpoints ..... **II 12**

2.1.3 Recombiner Discharge (Off Gas) Monitor Setpoints ..... **II 14**

2.1.4 Emergency Condenser Vent Monitor Setpoint ..... **II 15**

TABLE OF CONTENTS (Cont)

		PAGE
2.1.5	Discussion	II 15
2.1.5.1	Stack Effluent Monitoring System Description	II 15
2.1.5.2	Stack Sample Flow Path – RAGEMS Auxiliary Sample Point	II 15
2.1.5.3	Stack Sample Flow Path - OGESMS	II 16
2.1.5.4	Sample Frequency/Sample Analysis	II 16
2.1.5.5	I-133 and I-135 Estimates	II 16
2.1.5.6	Gaseous Radwaste Treatment System Operation	II 17
2.2	Dose and Dose Rate Determinations	II 17
2.2.1	Dose Rate	II 18
2.2.1.1	Noble Gases	II 19
2.2.1.2	Tritium, Iodines and Particulates	II 20
2.2.2	Dose	II 22
2.2.2.1	Noble Gas Air Dose	II 22
2.2.2.2	Tritium, Iodines and Particulates	II 23
2.2.2.3	Accumulating Doses	II 24
2.2.3	Dose Projections – Determination of Need to Operate Gaseous Radwaste Treatment System and Ventilation Exhaust Treatment System	II 24
2.3	Critical Receptors	II 25
2.4	Refinement of Offsite Doses Resulting From Emergency Condenser Vent Releases	II 26

TABLE OF CONTENTS (Cont)

			PAGE
3.0	40 CFR 190 REQUIREMENTS		II 27
	3.1	Evaluation of Doses From Liquid Effluents	II 28
	3.2	Evaluation of Doses From Gaseous Effluents	II 29
	3.3	Evaluation of Doses From Direct Radiation	II 30
	3.4	Doses to Members of the Public Within the Site Boundary	II 30
4.0	ENVIRONMENTAL MONITORING PROGRAM		II 33
	4.1	Sampling Stations	II 33
	4.2	Interlaboratory Comparison Program	II 33
	4.3	Capabilities for Thermoluminescent Dosimeters Used for Environmental Measurements	II 34
Appendix A	Liquid Dose Factor Derivation (A_{iat})		II 75
Appendix B	Plume Shine Dose Factor Derivation (B_i and V_i)		II 78
Appendix C	Organ Dose Parameters for Iodine - 131 & 133, Particulates and Tritium (R_i)		II 82
Appendix D	Diagrams of Radioactive Liquid and Gaseous Effluent Treatment Systems and Monitoring Systems		II 92

LIST OF TABLES

PART I – Radiological Effluent Controls

		PAGE
D 3.6.14-1	Radioactive Liquid Effluent Monitoring Instrumentation	I 3.1-3
D 4.6.14-1	Radioactive Liquid Effluent Monitoring Instrumentation – SR	I 3.1-5
D 3.6.14-2	Radioactive Gaseous Process and Effluent Monitoring Instrumentation	I 3.1-8
D 4.6.14-2	Radioactive Gaseous Process and Effluent Monitoring Instrumentation - SR	I 3.1-12
D 4.6.15-1	Radioactive Liquid Waste Sampling and Analysis Program – SR	I 3.1-16
D 4.6.15-2	Radioactive Gaseous Waste Sampling and Analysis Program – SR	I 3.1-22
D 3.6.20-1	Operational Radiological Environmental Monitoring Program	I 3.1-34
D 4.6.20-1	Detection Capabilities for Environmental Sample Analysis Lower Limit of Detection LLD – SR	I 3.1-38
D 6.9.3-1	Reporting Level for Radioactivity Concentration in Environmental Samples	I 6.0-5

PART II – Calculational Methodologies

Table 1-1	Average Energy Per Disintegration	II 36
Tables 2-1 to 2-8	A_{iat} Values for the NMP-1 Facility	II 37
Table 3-1	Critical Receptor Dispersion Parameters for Ground Level and Elevated Releases	II 45
Table 3-2	Gamma Air and Whole Body Plume Shine Dose Factors for Noble Gases (B_i and V_i)	II 46
Table 3-3	Immersion Dose Factors for Noble Gases	II 47
Tables 3-4 to 3-22	Dose and Dose Rate Factors (R_i)	II 48
Table 3-23	Parameters for the Evaluation of Doses to Real Members of the Public from Gaseous and Liquid Effluents	II 67
Table 5.1	Nine Mile Point Nuclear Station Radiological Environmental Monitoring Program Sampling Locations	II 68

LIST OF FIGURES

		PAGE
Figure 5.1-1	Nine Mile Point On-Site Map	II 72
Figure 5.1-2	Nine Mile Point Offsite Map	II 73
Figure 5.1.3-1	Site Boundaries	II 74
Figure D-0	Piping Instrument and Equipment Symbols	D-0
Figure D-1	Radioactive Waste Disposal	D-1
Figure D-2	Stm Packing, Exhauster, and Recombiner	D-2
Figure D-3	Reactor Building Vent System	D-3
Figure D-4	Waste Disposal Building Vent System	D-4
Figure D-5	NMP-1 Stack	D-5
Figure D-6	Offgas Building Vent System	D-6
Figure D-7	This Page/Figure Deleted	
Figure D-8	Stack Sample and Sample Return	D-8
Figures D-9, D-10	These Pages/Figures Deleted	
Figure D-11	OGESMS Schematic	D-11

INTRODUCTION

The Offsite Dose Calculation Manual (ODCM) provides the methodology to be used for demonstrating compliance with 10 CFR 20, 10 CFR 50, and 40 CFR 190. The contents of the ODCM are based on Draft NUREG-0472, Revision 3, "Standard Radiological Effluent Technical Specifications for Pressurized Water Reactors," September 1982; Draft NUREG-0473, Revision 2, "Radiological Effluent Technical Specifications for BWR's", July 1979; NUREG 0133, "Preparation of Radiological Effluent Technical Specifications for Nuclear Power Plants," October 1978; the several Regulatory Guides referenced in these documents; and, communication with the NRC staff.

Should it be necessary to revise the ODCM, these revisions will be made in accordance with Technical Specifications.

The Offsite Dose Calculation Manual (ODCM) is a supporting document of the Technical Specifications Section 6.5.1, "Offsite Dose Calculation Manual." The previous Limiting Conditions for Operation that were contained in the Radiological Effluent Technical Specifications are now transferred to the ODCM as Radiological Effluent Controls. The ODCM contains two parts: Radiological Effluent Controls Part I; and Calculational Methodologies, Part II. Radiological Effluent Controls, Part I, includes the following: (1) The Radioactive Effluent Controls and Radiological Environmental Monitoring Programs required by Technical Specifications 6.5.3, "Radioactive Effluent Controls Program" and 6.5.1, "Offsite Dose Calculation Manual", respectively, and (2) descriptions of the information that should be included in the Annual Radiological Environmental Operating and Radioactive Effluent Release Reports required by Technical Specifications 6.6.2, "Annual Radiological Environmental Operating Report" and 6.6.3 "Radioactive Effluent Release Report". Calculational Methodologies, Part II, describes methodology and parameters to be used in the calculation of liquid and gaseous effluent monitoring instrumentation alarm/trip setpoints and the calculation of offsite doses due to radioactive liquid and gaseous effluents. The ODCM also contains a list and graphical description of the specific sample locations for the radiological environmental monitoring program, and liquid and gaseous radwaste treatment system configurations.

PART I – RADIOLOGICAL EFFLUENT CONTROLS

PART I – RADIOLOGICAL EFFLUENT CONTROLS

Section 1.0 Definitions

NOTE:

Technical Specifications defined terms and the following additional defined terms are applicable throughout these controls and bases.

Functional (Functionality)

Functionality is an attribute of Structures, Systems, or Components (SSCs) that is not controlled by Technical Specifications. An SSC shall be functional or have functionality when it is capable of performing its specified function as set forth in the Current Licensing Basis (CLB). Functionality does not apply to specified safety functions, but does apply to the ability of non-Technical Specifications SSCs to perform specified support functions.

Gaseous Radwaste Treatment System

A gaseous radwaste treatment system is any system designed and installed to reduce radioactive gaseous effluents by collecting main condenser offgas and providing for delay or holdup for the purpose of reducing the total radioactivity prior to release to the environment.

Member(s) of the Public

Member(s) of the public shall include persons who are not occupationally associated with the Nine Mile Point Nuclear Station. This category does not include employees of owners and operators of Nine Mile Point Nuclear Station and James A. Fitzpatrick Nuclear Power Plant, their contractors or vendors who are occupationally associated with Nine Mile Point Unit 1. Also excluded from this category are persons who enter the site to service equipment or to make deliveries. This category does include persons who use portions of the site for recreational, occupational, or other purposes not associated with Nine Mile Point Unit 1.

Milk Sampling Location

A milk sampling location is that location where 10 or more head of milk animals are available for the collection of milk samples.

Offsite Dose Calculation Manual (ODCM)

The Offsite Dose Calculation Manual shall contain the current methodology and parameters used in the calculation of offsite doses due to radioactive gaseous and liquid effluents, in the calculation of gaseous and liquid effluent monitoring alarm/trip setpoints, and in the conduct of the environmental radiological monitoring program. The ODCM shall also contain the radioactive effluent controls and radiological environmental monitoring activities, and descriptions of the information that should be included in the Annual Radiological Environmental Operating and Radioactive Effluent Release Reports required by Technical Specifications 6.6.2, "Annual Radiological Environmental Operating Report" and 6.6.3, "Radioactive Effluent Release Report", and Controls D 6.9.1.d and D 6.9.1.e.

Purge – Purging
Purge or purging is the controlled process of discharging air or gas from a confinement to maintain temperature, pressure, humidity, concentration, or other operating condition, in such a manner that replacement air or gas is required to purify the confinement. The purge is completed when the oxygen concentration exceeds 19.5 percent.

Site Boundary

The site boundary shall be that line around the Nine Mile Point Nuclear Station beyond which the land is neither owned, leased, nor otherwise controlled by the owners and operators of Nine Mile Point Nuclear Station and James A. Fitzpatrick Nuclear Power Plant.

Source Check

A source check shall be the qualitative assessment of channel response when the channel sensor is exposed to a source of increased radioactivity.

Unrestricted Area

The unrestricted area shall be any area at or beyond the site boundary access to which is not controlled by the owners and operators of Nine Mile Point Nuclear Station and James A. Fitzpatrick Nuclear Power Plant for purposes of protection of individuals from exposure to radiation and radioactive materials, or any area within the site boundary used for residential quarters or for industrial, commercial, institutional, and/or recreational purposes. That area outside the restricted area (10 CFR 20.1003) but within the site boundary will be controlled by the owner as required.

Ventilation Exhaust Treatment System

A ventilation exhaust treatment system is any system designed and installed to reduce gaseous radioiodine or radioactive material in particulate form in effluents by passing ventilation or vent exhaust gases through charcoal adsorbers and/or HEPA filters for the purpose of removing iodines or particulates from the gaseous exhaust stream prior to the release to the environment. Such a system is not considered to have any effect on noble gas effluents. Engineered Safety Feature (ESF) atmospheric cleanup systems are not considered to be ventilation exhaust treatment system components.

Venting

Venting is the controlled process of discharging air or gas from a confinement to maintain temperature, pressure, humidity, concentration, or other operating condition, in such a manner that replacement air or gas is not provided or required during venting. Vent, used in system names, does not imply a venting process.

PART I – RADIOLOGICAL EFFLUENT CONTROLS

Sections 3.0/4.0 Applicability

3.0 CONTROLS

The Offsite Dose Calculation Manual (ODCM) Part I, Radiological Effluent Controls, is subject to Technical Specifications Section 3.0 requirements, as applicable.

4.0 SURVEILLANCE REQUIREMENTS

The ODCM Part I, Radiological Effluent Controls, is subject to Technical Specifications Section 4.0 requirements, as applicable.

CONTROLS

DLCO 3.6.14 RADIOACTIVE EFFLUENT INSTRUMENTATION

Applicability:

Applies to the functionality of plant instrumentation that monitors plant effluents.

Objective:

To assure the functionality of instrumentation to monitor the release of radioactive plant effluents.

Specification:

a. Liquid Effluent

The radioactive liquid effluent monitoring instrumentation channels shown in Table D 3.6.14-1 shall be functional with their alarm setpoints set to ensure that the limits of Control DLCO 3.6.15.a.1 are not exceeded. The alarm setpoints of these channels shall be determined and adjusted in accordance with the methodology and parameters in Part II.

With a radioactive liquid effluent monitoring instrumentation channel alarm setpoint less conservative than a value which will ensure that the limits of DLCO 3.6.15.a.1 are met, immediately suspend the release of radioactive liquid effluents monitored by the affected channel, or declare the channel nonfunctional, or change the setpoint so it is acceptably conservative.

SURVEILLANCE REQUIREMENT

DSR 4.6.14 RADIOACTIVE EFFLUENT INSTRUMENTATION

Applicability:

Applies to the surveillance of instrumentation that monitors plant effluents.

Objective:
To verify operation of monitoring instrumentation.

Specification:

a. Liquid Effluent

Each radioactive liquid effluent monitoring instrumentation channel shall be demonstrated functional by performance of the sensor check, source check, instrument channel calibration and channel test operations at the frequencies shown in Table D 4.6.14-1.

Records – Auditable records shall be maintained, in accordance with procedures in Part II, of all radioactive liquid effluent monitoring instrumentation alarm setpoints. Setpoints and setpoint calculations shall be available for review to ensure that the limits of Control DLCO 3.6.15.a.1 are met.

CONTROLS	SURVEILLANCE REQUIREMENT
With less than the minimum number of radioactive liquid effluent monitoring instrumentation channels functional, take the action shown in Table D 3.6.14-1. Restore the instruments to functional status within 30 days, or outline in the next Radioactive Effluent Release Report the cause of the nonfunctionality and how the instruments were or will be restored to functional status.	

TABLE D 3.6.14-1
RADIOACTIVE LIQUID EFFLUENT MONITORING INSTRUMENTATION

Instrument	Minimum Channels Functional	Applicability
1. Gross Radioactivity Monitors[a]		
A. Liquid Radwaste Effluent Line	1[c]	At all times[b]
B. Service Water System Effluent Line	1[d]	At all times[i]
2. Flow Rate Measurement Devices		
A. Liquid Radwaste Effluent Line	1[e]	At all times
B. Discharge Canal	**	**
3. Tank Level Indicating Devices[g]		
A. Outside Liquid Radwaste Storage Tanks	1[f]	At all times

**Pumps curves or rated capacity will be utilized to estimate flow.

NOTES FOR TABLE D 3.6.14-1

(a) Provide alarm, but do not provide automatic termination of release.

(b) An operator shall be present in the Radwaste Control Room at all times during a release.

(c) With the number of channels functional less than required by the minimum channels functional requirement, effluent releases may continue provided that prior to initiating a release:

1. At least two independent samples are analyzed in accordance with Specification DSR 4.6.15.a, and

2. At least two technically qualified members of the Facility Staff independently verify the release rate calculations and discharge line valving.

Otherwise suspend release of radioactive effluents via this pathway.

(d) With the number of channels functional less than required by the minimum channels functional requirement, effluent releases via this pathway may continue provided that, at least once per 12 hours, grab samples are collected and analyzed for gamma radioactivity at a lower limit of detection of at least $5x10^{-7}$ microcurie/ml.

(e) During discharge, with the number of channels functional less than required by the minimum channels functional requirement, effluent releases via this pathway may continue provided the flow rate is estimated at least once per 4 hours during actual releases.

(f) With the number of channels functional less than required by the minimum channels functional requirement, liquid additions to this tank may continue provided the tank liquid level is estimated during liquid additions to the tank.

(g) Tanks included in this specification are those outdoor tanks that are not surrounded by liners, dikes or walls capable of holding the tank contents.

(h) Deleted.

(i) Monitoring will be conducted continuously by alternately sampling the reactor building and turbine building service water return lines for approximately 15-minute intervals.

TABLE D 4.6.14-1
RADIOACTIVE LIQUID EFFLUENT MONITORING INSTRUMENTATION
Surveillance Requirement

Instrument	Sensor Check	Source Check[f]	Channel Test	Channel Calibration
1. Gross Beta or Gamma Radioactivity Monitors				
a. Liquid Radwaste Effluent Line	Once/day*	Once/discharge*	Once/3 months[a]*	Once/year[b]*
b. Service Water Effluent Line	Once/day	Once/92 days	Once/184 days[a]	Once/24 months[b]
2. Flow Rate Measurement Devices				
a. Liquid Radwaste Effluent Line	Once/day[c]	None	None	Once/24 months*
b. Discharge Canal[d]	None	None	None	Once/year
3. Tank Level Indicating Devices[e]				
a. Outside Liquid Radwaste Storage Tanks	Once/day**	None	Once/3 months	Once/18 months

* Required prior to removal of blank flange in discharge line and until blank flange is replaced.
** During liquid addition to the tank.

NOTES FOR TABLE D 4.6.14-1

(a) The channel test shall also demonstrate that control room alarm annunciation occurs if any of the following conditions exist:

1. Instrumentation indicates measured levels above the alarm setpoint.
2. Instrument indicates a downscale failure.
3. Instrument controls not set in operate mode.

(b) The channel calibration shall be performed using one or more reference standards certified by the National Institute of Standards and Technology (NIST), or using standards that are traceable to the NIST or using actual samples of liquid waste that have been analyzed on a system that has been calibrated with NIST traceable sources. These standards shall permit calibrating the system over its intended range of energy and measurement.

(c) Sensor check shall consist of verifying indication of flow during periods of release. Sensor check shall be made at least once per 24 hours on days on which continuous, periodic or batch releases are made.

(d) Pump performance curves or rated data may be used to estimate flow.

(e) Tanks included in this specification are those outdoor tanks that are not surrounded by liners, dikes or walls capable of holding the tank contents.

(f) Source check may consist of an installed check source, response to an external source, or (for liquid radwaste monitors) verification within 30 minutes of commencing discharge of monitor response to effluent.

CONTROLS

b. Gaseous Process and Effluent

The radioactive gaseous process and effluent monitoring instrumentation channels shown in Table D 3.6.14-2 shall be functional. The Offgas process monitor alarm setpoint shall be set to ensure that the limits of Technical Specification 3.6.15 are not exceeded. The Effluent monitor alarm setpoints shall be set to ensure that the limits of Control DLCO 3.6.15.b.1 are not exceeded. The alarm setpoints of these channels shall be determined and adjusted in accordance with the methodology and parameters in Part II.

With a radioactive gaseous process and effluent monitoring instrumentation channel alarm setpoint less conservative than required by the above specification, immediately suspend the release of radioactive gaseous effluents monitored by the affected channel, or declare the channel nonfunctional, or change the setpoint so it is acceptably conservative.

With less than the minimum number of radioactive gaseous process and effluent monitoring instrumentation channels functional, take the action shown in Table D 3.6.14-2. Restore the instruments to functional status within 30 days or outline in the next Radioactive Effluent Release Report the cause of the nonfunctionality and how the instruments were or will be restored to functional status.

SURVEILLANCE REQUIREMENT

b. Gaseous Process and Effluent

Each radioactive gaseous process and effluent monitoring instrumentation channel shall be demonstrated functional by performance of the sensor check, source check, instrument channel calibration and instrument channel test operations at the frequencies shown in Table D 4.6.14-2.

Auditable records shall be maintained of the calculations made, in accordance with procedures in Part II, of radioactive gaseous process and effluent monitoring instrumentation alarm setpoints. Setpoints and setpoint calculations shall be available for review to ensure that the limits of Control DLCO 3.6.15.b.1 are met.

TABLE D 3.6.14-2
RADIOACTIVE GASEOUS PROCESS AND EFFLUENT MONITORING INSTRUMENTATION

Instrument	Minimum Channels Functional	Applicability	Action
1. Stack Effluent Monitoring			
a. Noble Gas Activity Monitors			
(1) High Range	2	*	(a)
(2) Low Range	1	*	(i)
b. Iodine Sampler Cartridge	1	*	(b)
c. Particulate Sampler Filter	1	*	(b)
d. Sampler Flow Rate Measuring Device	1	*	(c)
e. Stack Gas Flow Rate Measuring Device	1	*	(c), (d)
2. Deleted			

* At all times.
** Note Deleted.

TABLE D 3.6.14-2 (cont'd)
RADIOACTIVE GASEOUS PROCESS AND EFFLUENT MONITORING INSTRUMENTATION

Instrument	Minimum Channels Functional	Applicability	Action
3. Condenser Air Ejector Process Monitor (Offgas System Recombiner Discharge)			
a. Noble Gas Activity Monitor	2	***	(g)
b. Offgas System Flow Rate Measuring Device	1	***	(c)
4. Emergency Condenser System Effluent			(h)
a. Noble Gas Activity Monitor	1 per vent	****	

*** During operation of the main condenser air ejector

**** During power operating conditions and whenever the reactor coolant temperature is greater than 212°F except for hydrostatic testing with the reactor not critical.

NOTES FOR TABLE D 3.6.14-2

(a) (1) With the number of channels functional 1 less than required by the minimum channels functional requirement, effluent releases via this pathway may continue provided:

(a) The nonfunctional channel is placed in the tripped condition,
OR
(b) Vent and Purge valves are closed and administratively controlled,
OR
(c) Primary containment integrity is not required.

(2) With the number of channels functional 2 less than required by the minimum channels functional requirement, effluent releases via this pathway may continue provided grab samples are taken once per 12 hours and these samples are analyzed for gross activity within 24 hours.

(b) With the number of channels functional less than required by the minimum channels functional requirements, effluent releases via this pathway may continue provided that samples are continuously collected with auxiliary sampling equipment starting within 8 hours of discovery in accordance with the requirements of Table D 4.6.15-2. When OGESMS and the auxiliary sampling equipment are both non-functional, Attachment 3 of Chemistry procedure N1-CSP-V304 may be used for obtaining continuous particulate and iodine samples.

(c) With the number of channels functional less than required by the minimum channels functional requirements, effluent releases via this pathway may continue provided the flow rate is estimated once per 8 hours.

(d) Stack gas flow rate may be estimated by exhaust fan operating configuration.

(e) Deleted

(f) Deleted

(g) (1) With the number of channels functional 1 less than required by the minimum channels functional requirement, gases from the main condenser offgas treatment system may be released provided:

(a) The nonfunctional channel is placed in the tripped condition,
OR
(b) At least one Stack monitor is functional,

Otherwise be in at least hot shutdown within 12 hours.

NOTES FOR TABLE D 3.6.14-2 (cont'd)

(2) With the number of channels functional 2 less than required by the minimum channels functional requirement, gases from the main condenser offgas treatment system may be released provided:

(a) Offgas grab samples are collected and analyzed once per 12 hours,
AND
(b) At least one Stack monitor is functional,

Otherwise be in at least hot shutdown within 12 hours.

(h) With the number of channels functional less than required by the minimum channels functional requirements, steam release via this pathway may commence or continue provided vent pipe radiation dose rates are monitored once per four hours.

(i) With the number of channels functional less than required by the minimum channels functional requirement, effluent releases via this pathway may continue provided grab samples are taken once per 12 hours and these samples are analyzed for gross activity within 24 hours.

TABLE D 4.6.14-2
RADIOACTIVE GASEOUS PROCESS AND EFFLUENT MONITORING INSTRUMENTATION

Surveillance Requirements

Instrument	Sensor Check	Source Check	Channel Test	Channel Calibration
1. Stack Effluent Monitoring System				
a. Noble Gas Activity Monitors (High Range and Low Range)	Once/day[a]	Once/92 days	Once/184 days[g]	Once/24 months[b]
b. Iodine Sampler Cartridge	None	None	None	None
c. Particulate Sampler Filter	None	None	None	None
d. Sampler Flow Rate Measuring Device	Once/day[a]	None	None	Once/24 months
e. Stack Gas Flow Rate Measuring Device	Once/day	None	None	Once/24 months
2. Deleted				
3. Condenser Air Ejector Process Monitor (Offgas System Recombiner Discharge)				
a. Noble Gas Activity Monitor	Once/day[f]	Once/92 days	Once/24 months[c]	Once/24 months[b]
b. Offgas System Flow Rate Measuring Device	Once/day[f]	None	None	Once/24 months
4. Emergency Condenser System Effluent	Once/day[h]	Once/92 days	Once184 days[g]	Once/24 months[b]
a. Noble Gas Activity Monitor				

NOTES FOR TABLE D 4.6.14-2

(a) At all times.

(b) The channel calibration shall be performed using one or more of the reference standards certified by the National Institute of Standards and Technology (NIST), standards that are traceable to the NIST or using actual samples of gaseous effluent that have been analyzed on a system that has been calibrated with NIST traceable sources. These standards shall permit calibrating the system over its intended range of energy and measurement.

(c) The channel function test shall demonstrate that control room alarm annunciation occurs if either of the following conditions exist:

1) Instrument indicates measured levels above the Hi or Hi Hi alarm setpoint.

2) Instrument indicates a downscale failure.

The channel function test shall also demonstrate that automatic isolation of this pathway occurs if either of the following conditions exist:

1) Instruments indicate two channels above Hi Hi alarm setpoint.

2) Instruments indicate one channel above Hi Hi alarm setpoint and one channel downscale.

(d) Deleted

(e) Deleted

(f) During operation of the main condenser air ejector.

(g) The channel test shall produce upscale and downscale annunciation.

(h) During power operating conditions and whenever the reactor coolant temperature is greater than 212°F except for hydrostatic testing with the reactor not critical.

CONTROLS

DLCO 3.6.15 RADIOACTIVE EFFLUENTS

Applicability:

Applies to the radioactive effluents from the station.

Objective:

To assure that radioactive material is not released to the environment in any uncontrolled manner and is within the limits of 10CFR20 and 10CFR50 Appendix I.

Specification:

a. Liquid

(1) Concentration

The concentration of radioactive material released in liquid effluents to unrestricted areas shall be limited to ten times the concentrations specified in 10CFR Part 20, Appendix B, Table 2, Column 2 for radionuclides other than dissolved or entrained noble gases. For dissolved or entrained noble gases, the concentration shall be limited to 2×10^{-4} microcuries/ml total activity.

Should the concentration of radioactive material released in liquid effluents to unrestricted areas exceed the above limits, restore the concentration to within the above limits immediately.

SURVEILLANCE REQUIREMENT

DSR 4.6.15 RADIOACTIVE EFFLUENTS

Applicability:

Applies to the periodic test and recording requirements of the station process effluents.

Objective:

To ascertain that radioactive effluents from the station are within the allowable values of 10CFR20, Appendix B and 10CFR50, Appendix I.

Specification:

a. Liquid

(1) Concentration

Radioactive liquid wastes shall be sampled and analyzed according to the sampling and analysis program of Table D 4.6.15-1.

The results of the radioactivity analyses shall be used in accordance with the methodology and parameters in Part II to assure that the concentrations at the point of release are maintained within the limits of Control DLCO 3.6.15.a.(1).

CONTROLS	SURVEILLANCE REQUIREMENT
(2) Dose The dose or dose commitment to a member of the public from radioactive materials in liquid effluents released, from each reactor unit, to unrestricted areas (see Figures 5.1-1) shall be limited: (a) During any calendar quarter to less than or equal to 1.5 mrems to the total body and to less than or equal to 5 mrems to any organ, and (b) During any calendar year to less than or equal to 3 mrems to the total body and to less than or equal to 10 mrems to any organ. With the calculated dose from the release of radioactive materials in liquid effluents exceeding any of the above limits, prepare and submit to the Commission within 30 days, pursuant to Control D 6.9.3, a Special Report that identifies the cause(s) for exceeding the limit(s) and defines the corrective actions that have been taken to reduce the releases and the proposed corrective actions to be taken to assure that subsequent releases will be in compliance with the above limits.	(2) Dose Cumulative dose contributions from liquid effluents for the current calendar quarter and the current calendar year shall be determined in accordance with the methodology and parameters in Part II monthly.

TABLE D 4.6.15-1
RADIOACTIVE LIQUID WASTE SAMPLING AND ANALYSIS PROGRAM
Surveillance Requirement

Liquid Release Type	Sampling Frequency	Minimum Analysis Frequency	Type of Activity Analysis	Lower Limit[a] of Detection (LLD) (μCi/ml)
A. Batch Waste[b] Tanks	* Each Batch	* Each Batch	Principal Gamma[c] Emitters	5×10^{-7}
			I-131	1×10^{-6}
	* Each Batch[d]	* Each Batch[d]	Dissolved and Entrained Gases (Gamma Emitters)	1×10^{-5}
	* Each Batch	Monthly Composite[e]	H-3	1×10^{-5}
			Gross Alpha	1×10^{-7}
	* Each Batch	Quarterly Composite[e]	Sr-89, Sr-90	5×10^{-8}
			Fe-55	1×10^{-6}
B. Service Water System Effluent	Once/month[f]	Once/month[f]	Principal Gamma[c] Emitters	5×10^{-7}
			I-131	1×10^{-6}
			Dissolved and Entrained Gases	1×10^{-5}
			H-3	1×10^{-5}
			Gross Alpha	1×10^{-7}
	Once/quarter[f]	Once/quarter[f]	Sr-89, Sr-90	5×10^{-8}
			Fe-55	1×10^{-6}

* Completed prior to each release.

NOTES FOR TABLE D 4.6.15-1

(a) The LLD is defined, for purposes of these specifications, as the smallest concentration of radioactive material in a sample that will yield a net count above system background that will be detected with 95 percent probability with only 5 percent probability of falsely concluding that a blank observation represents a "real" signal. For a particular measurement system which may include radiochemical separation:

$$LLD = \frac{4.66\ S_b}{E \bullet V \bullet 2.22 \times 10^6 \bullet Y \bullet \exp(-\lambda \Delta t)}$$

Where:

LLD is the "a priori" lower limit of detection as defined above, as microcuries per unit mass or volume,

S_b is the standard deviation of the background counting rate or of the counting rate of a blank sample as appropriate, as counts per minute,

E is the counting efficiency, as counts per disintegration,

V is the sample size in units of mass or volume,

2.22×10^6 is the number of disintegrations per minute per microcurie,

Y is the fractional radiochemical yield, when applicable,

λ is the radioactive decay constant for the particular radionuclide, and

Δt for plant effluents is the elapsed time between the midpoint of sample collection and time of counting.

Typical values of E, V, Y and Δt should be used in the calculation.

It should be recognized that the LLD is defined as a before the fact limit representing the capability of a measurement system and not as an after the fact for a particular measurement.

NOTES FOR TABLE D 4.6.15-1

(b) A batch release is the discharge of liquid wastes of a discrete volume. Prior to sampling for analyses, each batch shall be isolated and then thoroughly mixed to assure representative sampling.

(c) The principal gamma emitters for which the LLD specification applies exclusively are the following radionuclides: Mn-54, Fe-59, Co-58, Co-60, Zn-65, Mo-99, Cs-134, Cs-137, Ce-141 and Ce-144. This list does not mean that only these nuclides are to be considered. Other gamma peaks that are identifiable, together with those of the above nuclides, shall also be analyzed and reported in the Radioactive Effluent Release Report.

(d) If more than one batch is released in a calendar month, only one batch need be sampled and analyzed during that month.

(e) A composite sample is one in which the quantity of liquid sampled is proportional to the quantity of liquid waste discharged and in which the method of sampling employed results in a specimen that is representative of the liquids released.

(f) If the alarm setpoint of the service water effluent monitor, as determined by the method presented in Part II, is exceeded, the frequency of sampling shall be increased to daily until the condition no longer exists. Frequency of analysis shall be increased to daily for principal gamma emitters (including dissolved and entrained gases) and an incident composite for H-3, gross alpha, Sr-89, Sr-90 and Fe-55.

CONTROLS

b. Gaseous

(1) Dose Rate

The dose rate due to radioactive materials released in gaseous effluents from the site to areas at or beyond the site boundary shall be limited to the following:

(a) For noble gases: Less than or equal to 500 mrems/year to the whole body and less than or equal to 3000 mrems/year to the skin, and

(b) For iodine-131, iodine-133, tritium and all radionuclides in particulate form with half lives greater than 8 days: Less than or equal to 1500 mrems/year to any organ.

With the dose rate(s) exceeding the above limits, without delay restore the release rate to within the above limits(s).

SURVEILLANCE REQUIREMENT

b. Gaseous

(1) Dose Rate

The dose rate due to noble gases in gaseous effluents shall be determined to be within the limits of Control DLCO 3.6.15 in accordance with the methodology and parameters in Part II.

The dose rate due to iodine-131, iodine-133, tritium and all radionuclides in particulate form with half lives greater than 8 days in gaseous effluents shall be determined to be within the limits of Control DLCO 3.6.15 in accordance with methodology and parameters in Part II by obtaining representative samples and performing analyses in accordance with the sampling and analysis program specified in Table D 4.6.15-2.

CONTROLS	SURVEILLANCE REQUIREMENT
(2) Air Dose The air dose due to noble gases released in gaseous effluents, from each reactor unit, to areas beyond the site boundary shall be limited to the following: (a) During any calendar quarter: Less than or equal to 5 milliroentgen for gamma radiation and less than or equal to 10 mrads for beta radiation and, (b) During any calendar year: Less than or equal to 10 milliroentgen for gamma radiation and less than or equal to 20 mrads for beta radiation. With the calculated air dose from radioactive noble gases in gaseous effluents exceeding any of the above limits, prepare and submit to the Commission within 30 days, pursuant to Control D 6.9.3, a Special Report that identifies the cause(s) for exceeding the limit(s) and defines the corrective actions that have been taken to reduce the releases and the proposed corrective actions to be taken to assure that subsequent releases will be in compliance with the above limits.	(2) Air Dose Cumulative dose contributions for the current calendar quarter and current calendar year for noble gases shall be determined monthly in accordance with the methodology and parameters in Part II.

CONTROLS	SURVEILLANCE REQUIREMENT
(3) Tritium, Iodines and Particulates The dose to a member of the public from iodine-131, iodine-133, tritium and all radionuclides in particulate form with half lives greater than 8 days in gaseous effluents released, from each reactor unit, to areas beyond the site boundary shall be limited to the following: (a) During any calendar quarter: Less than or equal to 7.5 mrems to any organ and, (b) During any calendar year: Less than or equal to 15 mrems to any organ. With the calculated dose from the release of iodine-131, iodine-133, tritium and radionuclides in particulate form with half lives greater than 8 days, in gaseous effluents exceeding any of the above limits, prepare and submit to the Commission within 30 days, pursuant to Control D 6.9.3, a Special Report that identifies the cause(s) for exceeding the limit and defines the corrective actions that have been taken to reduce the releases and the proposed corrective actions to be taken to assure that subsequent releases will be in compliance with the above limits.	(3) Tritium, Iodines and Particulates Cumulative dose contributions for the current calendar quarter and current calendar year for iodine-131, iodine-133, tritium and radionuclides in particulate form with half lives greater than 8 days shall be determined monthly in accordance with the methodology and parameters in Part II.

TABLE D 4.6.15-2
RADIOACTIVE GASEOUS WASTE SAMPLING AND ANALYSIS PROGRAM

Surveillance Requirements

Gaseous Release Type	Sampling Frequency	Minimum Analysis Frequency	Type of Activity Analysis	Lower Limit[a] of Detection (LLD) (μCi/ml)
A. Containment Purge[b]	Each Purge	Prior to each release	Principal Gamma Emitters[c]	1×10^{-4}
	Grab Sample	Each Purge	Principal Gamma Emitters[c]	1×10^{-4}
			H-3	1×10^{-6}
B. Stack	Once/Month[d]	Once/Month[d]	Principal Gamma Emitters[c]	1×10^{-4}
	Once/Month[h]	Once/Month	H-3	1×10^{-6}
C. Stack	Continuous[e]	Once/Week[f] Charcoal Sample	I-131	1×10^{-12}
	Continuous[e]	Once/Week[f] Particulate Sample	Principal Gamma Emitters[c]	1×10^{-11}
	Continuous[e]	Once/Month Composite Particulate Sample	Gross alpha, Sr-89, Sr-90	1×10^{-11}
	Continuous[e]	Noble Gas Monitor	Noble Gases, Gross Gamma or Principal Gamma Emitters[c]	1×10^{-5}[g]

NOTES FOR TABLE D 4.6.15-2

(a) The LLD is defined in notation (a) of Table D 4.6.15-1.

(b) Purge is defined in Section 1.0.

(c) The principal gamma emitters for which the LLD specification applies exclusively are the following radionuclides: Kr-87, Kr-88, Xe-133, Xe-135 and Xe-138 for gaseous emissions and Mn-54, Fe-59, Co-58, Co-60, Zn-65, Mo-99, Cs-134, Cs-137, Ce-141, I-131 and Ce-144 for particulate emissions. This list does not mean that only these nuclides are to be considered. Other gamma peaks that are identifiable, together with those of the above nuclides, shall also be analyzed and reported in the Radioactive Effluent Release Report pursuant to Technical Specification 6.6.3, "Radioactive Effluent Release Report", and Control D 6.9.1.

(d) Sampling and analysis shall also be performed following shutdown, startup or an increase on the recombiner discharge monitor of greater than 50 percent, factoring out increases due to changes in thermal power level or dilution flow; or when the stack release rate is in excess of 1000 μCi/second and steady-state gaseous release rate increases by 50 percent.

(e) The sample flow rate and the stack flow rate shall be known for the time period covered by each dose or dose rate calculation made in accordance with Controls DLCO 3.6.15.b.(1).(b) and DLCO 3.6.15.b.(3).

(f) When the release rate is in excess of 1000 μCi/sec and steady state gaseous release rate increases by 50 percent, the iodine and particulate collection device shall be removed and analyzed to determine the changes in iodine-131 and particulate release rate. The analysis shall be done daily following each change until it is shown that a pattern exists which can be used to predict the release rate; after which it may revert to weekly sampling frequency. When samples collected for 24 hours are analyzed, the corresponding LLD's may be increased by a factor of 10.

(g) When the continuous Noble Gas Monitor is nonfunctional the LLD for noble gas gamma analysis shall be 1×10^{-4} μCi/cc.

(h) Tritium grab samples shall be taken weekly from the station ventilation exhaust (stack) when fuel is offloaded until stable tritium release levels can be demonstrated.

CONTROLS	SURVEILLANCE REQUIREMENT
c. Deleted	c. Main Condenser The radioactivity rate of noble gases at the recombiner discharge shall be continuously monitored in accordance with Table D 3.6.14-2.
d. Uranium Fuel Cycle The annual (calendar year) dose or dose commitment to any member of the public due to releases of radioactivity and to radiation from uranium fuel cycle sources shall be limited to less than or equal to 25 mrems to the whole body or any organ, except the thyroid, which shall be limited to less than or equal to 75 mrems.	d. Uranium Fuel Cycle Cumulative dose contributions from liquid and gaseous effluents shall be determined in accordance with Controls DSR 4.6.15.a.(2), DSR 4.6.15.b.(2) and DSR 4.6.15.b.(3) and in accordance with the methodology and parameters in Part II.

CONTROLS	SURVEILLANCE REQUIREMENT
With the calculated doses from the release of radioactive materials in liquid or gaseous effluents exceeding twice the limits of Controls DLCO 3.6.15.a(2), DLCO 3.6.15.b(2) and DLCO 3.6.15.b(3), calculations shall be made including direct radiation contributions from the reactor units, the Independent Spent Fuel Storage Installation (ISFSI), and from outside storage tanks to determine whether the above listed 40CFR190 limits have been exceeded. If such is the case, prepare and submit to the Commission within 30 days, pursuant to Control D 6.9.3, a Special Report that defines the corrective action to be taken to reduce subsequent releases to prevent recurrence of exceeding the above limits and includes the schedule for achieving conformance with the above limits. This Special Report, as defined in 10 CFR Part 20.2203(a)(4), shall include an analysis that estimates the radiation exposure (dose) to a member of the public from uranium fuel cycle sources, including all effluent pathways and direct radiation, for the calendar year that includes the release(s) covered by this report.	Cumulative dose contributions from direct radiation from the reactor units, ISFSI, and from radwaste storage tanks shall be determined in accordance with the methodology and parameters in Part II. This requirement is applicable only under conditions set forth in Control DLCO 3.6.15.d.

CONTROLS	SURVEILLANCE REQUIREMENT
It shall also describe levels of radiation and concentrations of radioactive material involved, and the cause of the exposure levels or concentrations. If the estimated dose(s) exceeds the above limits, and if the release condition resulting in violation of 40CFR Part 190 has not already been corrected, the Special Report shall include a request for a variance in accordance with the provisions of 40CFR 190. Submittal of the report is considered a timely request and a variance is granted until staff action on the request is complete.	

CONTROLS

DLCO 3.6.16 RADIOACTIVE EFFLUENT TREATMENT SYSTEMS

Applicability:

Applies to the operating status of the liquid and gaseous effluent treatment systems.

Objective:

To assure functionality of the liquid and gaseous effluent treatment system.

Specification:

a. Liquid

The liquid radwaste treatment system shall be used to reduce the radioactive materials in liquid wastes prior to their discharge when the projected dose due to the liquid effluent, from each unit, to the Unrestricted Areas would exceed 0.06 mrem to the total body or 0.2 mrem to any organ for any batch.

b. Gaseous

(1) The Gaseous Radwaste Treatment System shall be functional. The Gaseous Radwaste Treatment System shall be used to reduce radioactive materials in gaseous waste prior to their discharge as necessary to meet the requirements of Control DLCO 3.6.15.

SURVEILLANCE REQUIREMENT

DSR 4.6.16 RADIOACTIVE EFFLUENT TREATMENT SYSTEMS

Applicability:

Applies to the surveillance requirements for the liquid and gaseous effluent treatment systems.

Objective:

To verify functionality of the liquid and gaseous effluent treatment system.

Specification:

a. Liquid

Doses due to liquid releases to unrestricted areas shall be projected prior to the release of each batch of liquid radioactive waste in accordance with the methodology and parameters in Part II.

b. Gaseous

(1) Doses due to gaseous releases to areas at or beyond the site boundary shall be calculated in accordance with the methodology and parameters in Part II.

CONTROLS

With gaseous radwaste from the main condenser air ejector system being discharged without treatment for more than 7 days, prepare and submit to the Commission within 30 days, pursuant to Control D 6.9.3, a Special Report that identifies the nonfunctional equipment and the reason for its nonfunctionality, actions taken to restore the nonfunctional equipment to functional status, and a summary description of those actions taken to prevent a recurrence.

(2) The Ventilation Exhaust Treatment System shall be functional and appropriate portions of this system shall be used to reduce releases of radioactivity when the projected doses in 31 days due to gaseous effluent releases, from each unit, to areas beyond the site boundary would exceed 0.3 mrem to any organ of a member of the public.

With radioactive gaseous waste being discharged without treatment and in excess of the above limit, complete a CR evaluation of the degraded condition within 30 days that identifies the nonfunctional equipment, the reason for the nonfunctionality, and plans and schedule to restore the equipment to functional status.

(2)

NOTE:
Only required to be met when the Ventilation Exhaust Treatment System is not being fully utilized.

Project the doses from the iodine and particulate releases from each unit to areas beyond the Site Boundary at least every 31 days.

CONTROLS	SURVEILLANCE REQUIREMENT
DLCO 3.6.18 MARK I CONTAINMENT	DSR 4.6.18 MARK I CONTAINMENT
Applicability:	Applicability:
Applies to the venting/purging of the Mark I Containment.	Applies to the surveillance requirement for venting and purging of the Mark I Containment when required to be vented/purged through the Emergency Ventilation System.
Objective:	Objective:
To assure that the Mark I Containment is vented/purged so that the limits of Controls DLCO 3.6.15.b(1) and DLCO 3.6.15.b(3) are met.	To verify that the Mark I Containment is vented through the Emergency Ventilation System when required.
Specification:	Specification:
The Mark I Containment drywell shall be vented/ purged through the Emergency Ventilation System unless Controls DLCO 3.6.15.b.(1) and DLCO 3.6.15.b.(3) can be met without use of the Emergency Ventilation System. If these requirements are not satisfied, suspend all venting/purging of the drywell.	The containment drywell shall be determined to be aligned for venting/purging through the Emergency Ventilation System within four hours prior to start of and at least once per 12 hours during venting/purging of the drywell.

CONTROLS

DLCO 3.6.19 LIQUID WASTE HOLDUP TANKS*

Applicability:

Applies to the quantity of radioactive material that may be stored in an outdoor liquid waste holdup tank.

Objective:

To assure that the quantity of radioactive material stored in outdoor holdup tanks does not exceed a specified level.

Specification:

The quantity of radioactive material contained in an outdoor liquid waste tank shall be limited to less than or equal to 10 curies, excluding tritium and dissolved or entrained noble gases.

With the quantity of radioactive material in any such tank exceeding the above limit, immediately suspend all additions of radioactive material to the tank. Within 48 hours reduce the tank contents to within the limit and describe the events leading to this condition in the next Radioactive Effluent Release Report.

*Tanks included in this Control are those outdoor tanks that are not surrounded by liners, dikes, or walls capable of holding the tank contents and that do not have tank overflows and surrounding area drains connected to the liquid radwaste treatment system.

SURVEILLANCE REQUIREMENT

DSR 4.6.19 LIQUID WASTE HOLDUP TANKS

Applicability:

Applies to the surveillance requirements for outdoor liquid waste holdup tanks.

Objective:

To verify the quantity of radioactive material stored in an outdoor liquid waste holdup tank.

Specification:

The quantity of radioactive material contained in each of the tanks listed in Control DLCO 3.6.19 shall be determined to be within the limit of Control DLCO 3.6.19 by analyzing a representative sample of the tank's contents at least weekly when radioactive materials are being added to the tank.

CONTROLS

DLCO 3.6.20 RADIOLOGICAL ENVIRONMENTAL MONITORING PROGRAM

Applicability:

Applies to radiological samples of station environs.

Objective:

To evaluate the effects of station operations and radioactive effluent releases on the environs and to verify the effectiveness of the controls on radioactive material sources.

Specification:

The radiological environmental monitoring program shall be conducted as specified in Table D 3.6.20-1.

With the radiological environmental monitoring program not being conducted as specified in Table D 3.6.20-1, prepare and submit to the Commission, in the Annual Radiological Environmental Operating Report, a description of the reasons for not conducting the program as required and the plans for preventing a recurrence.

Deviations are permitted from the required sample schedule if samples are unobtainable due to hazardous conditions, seasonal unavailability, theft, uncooperative residents or to malfunction of automatic sampling equipment. In the event of the latter, every effort shall be made to complete corrective action prior to the end of the next sampling period.

SURVEILLANCE REQUIREMENT

DSR 4.6.20 RADIOLOGICAL ENVIRONMENTAL MONITORING PROGRAM

Applicability:

Applies to the periodic sampling and monitoring requirements of the radiological environmental monitoring program.

Objective:

To ascertain what effect station operations and radioactive effluent releases have had upon the environment.

Specification:

The radiological environmental monitoring samples shall be collected pursuant to Table D 3.6.20-1 from the specific locations given in the table and figure(s) in Part II and shall be analyzed pursuant to the requirements of Table D 3.6.20-1 and the detection capabilities required by Table D 4.6.20-1.

CONTROLS	SURVEILLANCE REQUIREMENT
With the level of radioactivity (as the result of plant effluents), in an environmental sampling medium exceeding the reporting levels of Table D 6.9.3-1 when averaged over any calendar quarter, prepare and submit to the Commission within 30 days from the end of the affected calendar quarter a Special Report pursuant to Control D 6.9.3. The Special Report shall identify the cause(s) for exceeding the limit(s) and define the corrective action(s) to be taken to reduce radioactive effluents so that the potential annual dose to a member of the public is less than the calendar year limits of Controls DLCO 3.6.15.a.(2), DLCO 3.6.15.b.(2) and DLCO 3.6.15.b.(3). When more than one of the radionuclides in Table D 6.9.3-1 are detected in the sampling medium, this report shall be submitted if: $\frac{\text{concentration (1)}}{\text{limit level (1)}} + \frac{\text{concentration (2)}}{\text{limit level (2)}} + \ldots\ldots\ldots$ ≥ 1.0 When radionuclides other than those in Table D 6.9.3-1 are detected and are the result of plant effluents, this report shall be submitted if the potential annual dose to an individual is equal to or greater than the calendar year limits of Controls DLCO 3.6.15.a.(2), DLCO 3.6.15.b.(2) and DLCO 3.6.15.b.(3).	

CONTROLS	SURVEILLANCE REQUIREMENT
This report is not required if the measured level of radioactivity was not the result of plant effluents; however, in such an event, the condition shall be reported and described in the Annual Radiological Environmental Operating Report.	
With milk or fruit and/or vegetables no longer available at one or more of the sample locations specified in Table D 3.6.20-1, identify locations for obtaining replacement samples and add them to the radiological environmental monitoring program within 30 days. The specific locations from which samples were unavailable may then be deleted from the monitoring program. Identify the cause of the unavailability of samples and identify the new location(s) for obtaining replacement samples in the next Radioactive Effluent Release Report and also include in the report a revised figure(s) and table for Part II reflecting the new location(s).	

TABLE D 3.6.20-1
OPERATIONAL RADIOLOGICAL ENVIRONMENTAL MONITORING PROGRAM

Exposure Pathway and/or Sample	Number of Samples[a] and Locations	Sampling and Collection Frequency [a]	Type of Analysis and Frequency
Radioiodine & Particulates	Samples from 5 locations: 1) 3 Samples from off-site locations in different sectors of the highest calculated site average D/Q (based on all site licensed reactors) 2) 1 sample from the vicinity of an established year round community having the highest calculated site average D/Q (based on all site licensed reactors) 3) 1 sample from a control location 10-17 miles distant and in a least prevalent wind direction[d]	Continuous sampler operation with sample collection weekly or as required by dust loading, whichever is more frequent	Radioiodine Canisters analyze once/week for I-131. Particulate Samplers Gross beta radioactivity following filter change,[b] composite (by location) for gamma isotopic analysis[c] once per 3 months, (as a minimum)
Direct Radiation[e]	32 stations with two or more dosimeters to be placed as follows: an inner ring of stations in the general area of the site boundary and an outer ring in the 4 to 5 mile range from the site with a station in each land based sector.* The balance of the stations should be placed in special interest areas such as population centers, nearby residences, schools and in 2 or 3 areas to serve as control stations.	Once per 3 months	Gamma dose once per 3 months

* At this distance, 8 wind rose sectors are over Lake Ontario.

TABLE D 3.6.20-1 (Cont)
OPERATIONAL RADIOLOGICAL ENVIRONMENTAL MONITORING PROGRAM

Exposure Pathway and/or Sample	Number of Samples[a] and Locations	Sampling and Collection Frequency [a]	Type of Analysis and Frequency
WATERBORNE			
Surface[f]	1) 1 sample upstream 2) 1 sample from the site's downstream cooling water intake	Composite sample over 1 month period[g]	Gamma isotopic analysis[c] once/month. Composite for once per 3 months tritium analysis.
Sediment from Shoreline	1 sample from a downstream area with existing or potential recreational value	Twice per year	Gamma isotopic analysis[c]
INGESTION			
Milk	1) Samples from milk sampling locations in 3 locations within 3.5 miles distance having the highest calculated site average D/Q. If there are none, then 1 sample from milking animals in each of 3 areas 3.5-5.0 miles distant having the highest calculated site average D/Q (based on all site licensed reactors) 2) 1 sample from a milk sampling location at a control location (9-20 miles distant and in a least prevalent wind direction)[d]	Twice per month, April-December (samples will be collected in January-March if I-131 is detected in November and December of the preceding year)	Gamma isotopic[c] and I-131 analysis twice per month when animals are on pasture (April-December); once/month at other times (January-March) if required

TABLE D 3.6.20-1 (Cont)
OPERATIONAL RADIOLOGICAL ENVIRONMENTAL MONITORING PROGRAM

Exposure Pathway and/or Sample		Number of Samples[a] and Locations	Sampling and Collection Frequency [a]	Type of Analysis and Frequency
Fish	1)	1 sample each of two commercially or recreationally important species in the vicinity of a plant discharge area.[h]	Twice per year	Gamma isotopic analysis[c] on edible portions twice per year
	2)	1 sample each of the same species from an area at least 5 miles distant from the site.[d]		
Food Products	1)	Samples of three different kinds of broad leaf vegetation (such as vegetables) grown nearest to each of two different off-site locations of highest calculated site average D/Q (based on all licensed site reactors).	Once per year during harvest season	Gamma isotopic[c] analysis of edible portions (isotopic to include I-131 or a separate I-131 analysis may be performed) once during the harvest season
	2)	One sample of each of the similar broad leaf vegetation grown at least 9.3-20 miles distant in a least prevalent wind direction.		

NOTES FOR TABLE D 3.6.20-1

(a) It is recognized that, at times, it may not be possible or practical to obtain samples of the media of choice at the most desired location or time. In these instances, suitable alternative media and locations may be chosen for the particular pathway in question and may be substituted. Actual locations (distance and directions) from the site shall be provided in the Annual Radiological Environmental Operating Report. Highest D/Q locations are based on historical meteorological data for all site licensed reactors.

(b) Particulate sample filters should be analyzed for gross beta 24 hours or more after sampling to allow for radon and thoron daughter decay. If the gross beta activity in air is greater than 10 times a historical yearly mean of control samples, gamma isotopic analysis shall be performed on the individual samples.

(c) Gamma isotopic analysis means the identification and quantification of gamma emitting radionuclides that may be attributable to the effluents from the facility.

(d) The purpose of these samples is to obtain background information. If it is not practical to establish control locations in accordance with the distance and wind direction criteria, other sites, such as historical control locations which provide valid background data may be substituted.

(e) One or more instruments, such as a pressurized ion chamber, for measuring and recording dose rate continuously may be used in place of, or in addition to, integrating dosimeters. For the purpose of this table, a thermoluminescent dosimeter may be considered to be one phosphor and two or more phosphors in a packet may be considered as two or more dosimeters. Film badges shall not be used for measuring direct radiation.

(f) The "upstream sample" should be taken at a distance beyond significant influence of the discharge. The "downstream sample" should be taken in an area beyond but near the mixing zone, if possible.

(g) Composite samples should be collected with equipment (or equivalent) which is capable of collecting an aliquot at time intervals which are very short (e.g. hourly) relative to the compositing period (e.g. monthly) in order to assure obtaining a representative sample.

(h) In the event commercial or recreational important species are not available as a result of three attempts, then other species may be utilized as available.

TABLE D 4.6.20-1
DETECTION CAPABILITIES FOR ENVIRONMENTAL SAMPLE ANALYSIS[a,b]
LOWER LIMIT OF DETECTION LLD[c]
Surveillance Requirement

Analysis	Water[c] (pCi/l)	Airborne Particulate or Gases (pCi/m^3)	Fish (pCi/kg, wet)	Milk (pCi/l)	Food Products (pCi/kg, wet)	Sediment (pCi/kg, dry)
gross beta	4	0.01				
H-3	2000*					
Mn-54	15		130			
Fe-59	30		260			
Co-58, Co-60	15		130			
Zn-65	30		260			
Zr-95, Nb-95	15					
I-131	1**	0.07		1	60	
Cs-134	15	0.05	130	15	60	150
Cs-137	18	0.06	150	18	80	180
Ba/La-140	15			15		

* If no drinking water pathway exists, a value of 3000 pCi/liter may be used.

** If no drinking water pathway exists, a value of 15 pCi/liter may be used.

NOTES FOR TABLE D 4.6.20-1

(a) This list does not mean that only these nuclides are to be considered. Other peaks that are identifiable, together with those of the above nuclides, shall also be analyzed and reported in the Annual Radiological Environmental Operating Report pursuant to Technical Specification 6.6.2, "Annual Radiological Environmental Operating Report", and Control D 6.9.1.d.

(b) Required detection capabilities for thermoluminescent dosimeters used for environmental measurements are given in ANSI N.545 (1975), Section 4.3. Allowable exceptions to ANSI N.545 (1975), Section 4.3 are contained in Part II, Section 4.3.

(c) The LLD is defined, for purposes of these specifications, as the smallest concentration of radioactive material in a sample that will yield a net count, above system background, that will be detected with 95 percent probability with only 5 percent probability of falsely concluding that a blank observation represents a "real" signal.

For a particular measurement system, which may include radiochemical separation:

$$LLD = \frac{4.66\ S_b}{E \bullet V \bullet 2.22 \bullet Y \bullet \exp(-\lambda \Delta t)}$$

Where:

LLD is the "a priori" lower limit of detection as defined above, as picocuries per unit mass or volume,

S_b is the standard deviation of the background counting rate or of the counting rate of a blank sample as appropriate, as counts per minute,

E is the counting efficiency, as counts per disintegration,

V is the sample size in units of mass or volume,

2.22 is the number of disintegrations per minute per picocurie,

Y is the fractional radiochemical yield, where applicable,

λ is the radioactive decay constant for the particular radionuclide, and

Δt for environmental samples is the elapsed time between sample collection, or end of the sample collection period and time of counting.

Typical values of E, V, Y and Δt should be used in the calculation.

NOTES FOR TABLE D 4.6.20-1

It should be recognized that the LLD is defined as a before the fact limit representing the capability of a measurement system and not as an after the fact limit for the particular measurement. Analyses shall be performed in such a manner that the stated LLDs will be achieved under routine conditions. Occasionally, background fluctuations, unavoidable small sample sizes, the presence of interfering nuclides or other uncontrollable circumstances may render these LLDs unachievable. In such cases, the contributing factors shall be identified and described in the Annual Radiological Environmental Operating Report pursuant to Technical Specification 6.6.2, "Annual Radiological Environmental Operating Report", and Control D 6.9.1.d.

CONTROLS	SURVEILLANCE REQUIREMENT
DLCO 3.6.21 INTERLABORATORY COMPARISON PROGRAM Applicability: Applies to participation in an interlaboratory comparison program on environmental sample analysis. Objective: To ensure the accuracy of measurements of radioactive material in environmental samples. Specification: Analyses shall be performed on radioactive materials supplied as part of an Interlaboratory Comparison Program which has been approved by the Commission. Participation in this program shall include media for which environmental samples are routinely collected and for which intercomparison samples are available. With analyses not being performed as required above, report the corrective actions taken to prevent a recurrence to the Commission in the Annual Radiological Environmental Operating Report.	DSR 4.6.21 INTERLABORATORY COMPARISON PROGRAM Applicability: Applies to testing the validity of measurements on environmental samples. Objective: To verify the accuracy of measurements on radioactive material in environmental samples. Specification: The Interlaboratory Comparison Program shall be described in Part II. A summary of the results obtained as part of the above required Interlaboratory Comparison Program shall be included in the Annual Radiological Environmental Operating Report. Participants in the EPA Cross Check Program may provide the EPA program code designation in lieu of providing results.

CONTROLS

DLCO 3.6.22 LAND USE CENSUS

Applicability:

Applies to the performance of a land use census in the vicinity of the Nine Mile Point Nuclear Facility.

Objective:

To determine the utilization of land within a distance of three miles from the Facility.

Specification:

A land use census shall be conducted and shall identify within a distance of three miles the location in each of the 16 meteorological sectors the nearest residence and within a distance of three miles the location in each of the 16 meteorological sectors of all milk animals. In lieu of a garden census, specifications for vegetation sampling in Table D 3.6.20-1 shall be followed, including analysis of appropriate controls.

With a land use census identifying a milk animal location(s) that represents a calculated D/Q value greater than the D/Q value currently being used in Control DSR 4.6.15.b.(3), identify the new location(s) in the next Radioactive Effluent Release Report.

SURVEILLANCE REQUIREMENT

DSR 4.6.22 LAND USE CENSUS

Applicability:

Applies to assuring that current land use is known.

Objective:

To verify the appropriateness of the environmental surveillance program.

Specification:

The land use census shall be conducted during the growing season at least once per 12 months using that information that will provide the best results, such as conducting a door-to-door survey, aerial survey or consulting local agriculture authorities. The results of the land use census shall be included in the Annual Radiological Environmental Operating Report.

CONTROLS	SURVEILLANCE REQUIREMENT
If the D/Q value at a new milk sampling location is significantly greater (50%) than the D/Q value at an existing milk sampling location, add the new location to the radiological environmental monitoring program within 30 days. The sampling location(s) excluding the control station location, having the lowest calculated D/Q may be deleted from this monitoring program after October 31 of the year in which this land use census was conducted. Pursuant to Control D 6.9.1.e identify the new location(s) in the next Radioactive Effluent Release Report and also include in the report a revised figure(s) and table for Part II reflecting the new location(s).	

PART I – RADIOLOGICAL EFFLUENT CONTROLS

Bases

BASES FOR DLCO 3.6.14 and DSR 4.6.14 RADIOACTIVE EFFLUENT INSTRUMENTATION

The radioactive liquid and gaseous effluent instrumentation is provided to monitor and control, as applicable, the releases of radioactive materials in liquid and gaseous effluents during actual or potential releases of liquid and gaseous effluents. The alarm/trip setpoints for these instruments shall be calculated and adjusted in accordance with the methodology and parameters in Part II to ensure that the alarm/trip will occur prior to exceeding the limits as described in Technical Specification 6.5.3, "Radioactive Effluent Controls Program".

The alarm/trip setpoint for the Offgas process monitor is limited by Technical Specification 3.6.15. The Objective of that Specification is to assure radioactive material released is within the limits of 10CFR20 and 10CFR50 Appendix I. By doing so, total body exposure to an individual at the exclusion area boundary will not exceed a very small fraction of the limits of 10 CFR 100 in the event this effluent is discharged directly without treatment.

The Offgas Process Monitors and Stack Effluent Monitors are interdependent. The Stack Effluent Monitors provide Effluent Monitoring (which requires a minimum of 1 Low Range and 1 High Range monitor) and Containment Purge and Vent Isolation (which requires 2 High Range monitors). When the Purge and Vent isolation capability is not required (Primary containment not required OR Purge and Vent valves shut and clearance applied), only 1 High Range Monitor and 1 Low Range monitor are required to satisfy the monitoring function. When serving as back-up to the Offgas Monitors (Table D 3.6.14-2 Note g), this function may be satisfied by a single Low Range or High Range monitor because all Stack monitors function in the region of interest due to their design overlap.

The functionality and use of this instrumentation is consistent with the requirements of General Design Criteria 60, 63 and 64 of Appendix A to 10CFR Part 50. The purpose of tank level indicating devices is to assure the detection and control of leaks that if not controlled could potentially result in the transport of radioactive materials to unrestricted areas.

BASES FOR DLCO 3.6.15 AND DSR 4.6.15 RADIOACTIVE EFFLUENTS

Liquid Concentration

This control is provided to ensure that the concentration of radioactive materials released in liquid waste effluents to unrestricted areas will be less than ten times the concentration levels specified in 10CFR Part 20, Appendix B, Table 2, Column 2. This limitation provides additional assurance that the levels of radioactive materials in bodies of water in unrestricted areas will result in exposures within (1) the Section II.A design objectives of Appendix I, 10CFR Part 50, to a member of the public and (2) the limits of 10 CFR 20.1301(e) to the population. The concentration limit for dissolved or entrained noble gases is based upon the assumption that Xe-135 is the controlling radioisotope and its effluent concentration in air (submersion) was converted to an equivalent concentration in water using the methods described in International Commission on Radiological Protection (ICRP) Publication 2.

The required detection capabilities for radioactive materials in liquid waste samples are tabulated in terms of the lower limits of detection (LLDs). Detailed discussion of the LLD and other detection limits can be found in HASL Procedures Manual, HASL-300 (revised annually), Currie, L. A., "Limits for Qualitative Detection and Quantitative Determination - Application to Radiochemistry," Anal. Chem. 40. 586-93 (1968), and Hartwell, J. K., "Detection Limits for Radioanalytical Counting Techniques," Atlantic Richfield Hanford Company Report ARH-SA-215 (June 1975).

BASES FOR DLCO 3.6.15 AND DSR 4.6.15 RADIOACTIVE EFFLUENTS

Liquid Dose

This control is provided to implement the requirements of Section II.A, III.A and IV.A of Appendix I, 10CFR Part 50. The controls expressed as quarter and annual limits are set at those values found in Section II.A. of Appendix I, in accordance with Section IV.A. The action statements provide the required operating flexibility and at the same time implement the guides set forth in Section IV.A of Appendix I to assure that the releases of radioactive material in liquid effluents to unrestricted areas will be kept "as low as is reasonably achievable." There are no drinking water supplies that can be potentially affected by plant operations. The dose calculation methodology and parameters in Part II implement the requirements in Section III.A of Appendix I that conformance with the guides of Appendix I be shown by calculation procedures based on models and data, such that the actual exposure of a member of the public through appropriate pathways is unlikely to be substantially underestimated. The equations specified in Part II for calculating the doses due to the actual release rates of radioactive materials in liquid effluents are consistent with the methodology provided in Regulatory Guide 1.109, "Calculation of Annual Doses to Man from Routine Releases of Reactor Effluents for the Purpose of Evaluating Compliance with 10CFR Part 50, Appendix I," Revision 1, October 1977 and Regulatory Guide 1.113, "Estimating Aquatic Dispersion of Effluents from Accidental and Routine Reactor Releases for the Purpose of Implementing Appendix I," April 1977.

BASES FOR DLCO 3.6.15 AND DSR 4.6.15 RADIOACTIVE EFFLUENTS

Gaseous Dose Rate

This control is provided to ensure that the dose at any time at or beyond the site boundary from gaseous effluents from all units on the site will be within the annual dose limits of 10CFR Part 20 to unrestricted areas. The annual dose limits are the doses associated with the concentrations of 10CFR Part 20, Appendix B, Table 2, Column 1. These limits provide reasonable assurance that radioactive material discharged in gaseous effluents will not result in the exposure of a member of the public in an unrestricted area, either within or outside the site boundary, to annual average concentrations exceeding the limits specified in Appendix B, Table 2 of 10CFR Part 20 or as governed by 10 CFR 20.1302(c). For members of the public who may at times be within the site boundary, the occupancy of that member of the public will usually be sufficiently low to compensate for any increase in the atmospheric diffusion factor above that for the site boundary. The specified release rate limits restrict, at all times, the corresponding gamma and beta dose rates above background to a member of the public at or beyond the site boundary to less than or equal to 500 mrems/year to the total body or to less than or equal to 3000 mrems/year to the skin. These release rate limits also restrict, at all times, the corresponding thyroid dose rate above background to a child via the inhalation pathway to less than or equal to 1500 mrems/year.

The required detection capabilities for radioactive materials in gaseous waste samples are tabulated in terms of the lower limits of detection (LLDs). Detailed discussion of the LLD and other detection limits can be found in HASL Procedures Manual, HASL-300 (revised annually), Currie, L. A., "Limits for Qualitative Detection and Quantitative Determination - Application to Radiochemistry," Anal. Chem. 40, 586-93 (1968), and Hartwell, J. K., "Detection Limits for Radioanalytical Counting Techniques," Atlantic Richfield Hanford Company Report ARH-SA-215 (June 1975).

BASES FOR DLCO 3.6.15 AND DSR 4.6.15 RADIOACTIVE EFFLUENTS

Dose - Noble Gases

This control is provided to implement the requirements of Sections II.B, III.A and IV.A of Appendix I, 10CFR Part 50. The controls expressed as quarter and annual limits are set at those values found in Section II.B of Appendix I in accordance with the guidance of Section IV.A. The action statements provide the required operating flexibility and at the same time implement the guides set forth in Section IV-A of Appendix I to assure that the releases of radioactive material in gaseous effluents to unrestricted areas will be kept "as low as is reasonably achievable." The Surveillance Requirement implements the requirements in Section III.A of Appendix I that conform with the guides of Appendix I be shown by calculational procedures based on models and data such that the actual exposure of a member of the public through appropriate pathways is unlikely to be substantially underestimated. The dose calculation methodology and parameters established in Part II for calculating the doses due to the actual release rates of radioactive noble gases in gaseous effluents are consistent with the methodology provided in Regulatory Guide 1.109, "Calculation of Annual Doses to Man from Routine Releases of Reactor Effluents for the Purpose of Evaluating Compliance with 10CFR Part 50, Appendix I, "Revision 1, October 1977 and Regulatory Guide 1.111, "Methods for Estimating Atmospheric Transport and Dispersion of Gaseous Effluents in Routine Releases from Light-Water Cooled Reactors," Revision 1, July 1977.

The Offsite Dose Calculation Manual Part II equations provided to determine the air doses beyond the site boundary are based upon the historical average atmospheric conditions.

BASES FOR DLCO 3.6.15 AND DSR 4.6.15 RADIOACTIVE EFFLUENTS

Dose - Iodine-131, Iodine-133, Tritium and Radionuclides in Particulate Form

This control is provided to implement the requirements of Sections II.C, III.A and IV.A of Appendix I, 10CFR Part 50. The controls expressed as quarter and annual limits are set at those values found in Section II.C of Appendix I in accordance with the guidance of Section IV.A. The action statements provide the required operating flexibility and at the same time implement the guides set forth in Section IV.A of Appendix I to assure that the releases of radioactive materials in gaseous effluents to unrestricted areas will be kept "as low as is reasonably achievable." The Part II calculational methods specified in the Surveillance Requirement implements the requirements in Section III.A of Appendix I that conformance with the guides of Appendix I be shown by calculational procedures based on models and data, such that the actual exposure of a member of the public through appropriate pathways is unlikely to be substantially underestimated. The Part II calculational methodology and parameters for calculating the doses due to the actual release rates of the subject materials are consistent with the methodology provided in Regulatory Guide 1.109, "Calculation of Annual Doses to Man from Routine Releases of Reactor Effluents for the Purpose of Evaluating Compliance with 10CFR Part 50, Appendix I," Revision 1, October 1977 and Regulatory Guide 1.111, "Methods for Estimating Atmospheric Transport and Dispersion of Gaseous Effluents in Routine Releases from Light-Water-Cooled Reactors," Revision 1, July 1977. These equations also provide for determining the actual doses based upon the historical average atmospheric conditions. The release rate specifications for iodine-131, iodine-133, tritium and radionuclides in particulate form with half lives greater than 8 days are dependent upon the existing radionuclide pathways to man, in the areas beyond the site boundary. The pathways that were examined in the development of these calculations were: 1) individual inhalation of airborne radionuclides, 2) deposition of radionuclides onto green leafy vegetation with subsequent consumption by man, 3) deposition onto grassy areas where milk animals and meat producing animals graze with consumption of the milk and meat by man and 4) deposition on the ground with subsequent exposure of man.

BASES FOR DLCO 3.6.15 AND DSR 4.6.15 RADIOACTIVE EFFLUENTS

Total Dose - Uranium Fuel Cycle

This control is provided to meet the dose limitations of 40CFR Part 190 that have been incorporated into 10CFR Part 20 by 46FR 18525. The control requires the preparation and submittal of a Special Report whenever the calculated doses from plant generated radioactive effluents and direct radiation exceed 25 mrems to the whole body or any organ, except the thyroid, which shall be limited to less than or equal to 75 mrems. For sites containing up to 4 reactors, it is highly unlikely that the resultant dose to a member of the public will exceed the dose limits of 40CFR Part 190 if the individual reactors remain within twice the dose design objectives of Appendix I and if direct radiation doses from the reactor units, the on-site Independent Spent Fuel Storage Installation (ISFSI), and outside storage tanks are kept small. The Special Report will describe a course of action that should result in the limitation of the annual dose to a member of the public to within the 40CFR Part 190 limits. For the purposes of the Special Report, it may be assumed that the dose commitment to a member of the public from other uranium fuel cycle sources is negligible, with the exception that dose contribution from other nuclear fuel cycle facilities at the same site or within a radius of 8 km must be considered. If the dose to any member of the public is estimated to exceed the requirements of 40CFR Part 190, the Special Report with a request for variance (provided the release conditions resulting in violation of 40CFR Part 190 have not already been corrected), in accordance with the provisions of 40CFR Part 190.11 and 10 CFR Part 20.2203(a)(4) is considered to be a timely request and fulfills the requirements of 40CFR Part 190 until NRC staff action is completed. The variance only relates to the limits of 40CFR Part 190 and does not apply in any way to the other requirements for dose limitation of 10CFR Part 20, as addressed in Controls
DLCO 3.6.15.a.(1) and DLCO 3.6.15.b.(1). An individual is not considered a member of the public during any period in which he/she is engaged in carrying out any operation that is part of the nuclear fuel cycle.

BASES FOR DLCO 3.6.16 AND DSR 4.6.16 RADIOACTIVE EFFLUENT TREATMENT SYSTEMS

Liquid Radwaste Treatment System

The requirement that the appropriate portions of this system be used provides assurance that the releases of radioactive materials in liquid effluents will be kept "as low as is reasonably achievable." This control implements the requirements of 10 CFR Part 50.36a, General Design Criterion 60 of Appendix A to 10 CFR 50 and the design objective given in Section II.D of Appendix I to 10 CFR Part 50. Projected doses are calculated on a batch rather than every 31 days due to the low frequency of releases.

Gaseous Effluent Treatment Systems

The functionality of the Gaseous Radwaste Treatment System and the Ventilation Exhaust Treatment System ensures that the systems will be available for use whenever gaseous effluents require treatment prior to release to the environment. The requirement that appropriate portions of these systems be used, when specified, provides reasonable assurance that the releases of radioactive materials in gaseous effluents will be kept "as low as is reasonably achievable." This control implements the requirements of 10 CFR Part 50.36a, General Design Criterion 60 of Appendix A to 10 CFR 50 and the design objectives given in Section II.D of Appendix I to 10 CFR Part 50. The control governing the use of appropriate portions of the Gaseous Radwaste Treatment System is based on time without treatment rather than dose, due to the wide variability in effluent with changing power conditions. Since the capability exists to operate within specification without use of the Gaseous Radwaste Treatment System, it is conceivable that due to unforeseen circumstances, limited operation without the system may be made sometime during the life of the plant. The control governing the use of appropriate portions of the Ventilation Exhaust Treatment System was specified as a suitable fraction of the dose design objectives set forth in II.C of Appendix I, 10CFR Part 50, for gaseous effluents.

BASES FOR DLCO 3.6.18 AND DSR 4.6.18 MARK I CONTAINMENT

This control provides reasonable assurance that releases from drywell purging operations will not exceed the annual dose limits of 10CFR Part 20 for unrestricted areas.

BASES FOR DLCO 3.6.19 AND DSR 4.6.19 LIQUID HOLDUP TANKS

This control applies to any outdoor tank that is not surrounded by liners, dikes or walls capable of holding the tank contents and that does not have tank overflows and surrounding areas drains connected to the liquid radwaste treatment system.

Restricting the quantity of radioactive material contained in the specified tanks provides assurance that in the event of an uncontrolled release of the tanks' contents, the resulting concentrations would be less than ten times the concentrations of 10CFR Part 20, Appendix B, Table 2, Column 2, at the nearest potable water supply and the nearest surface water supply in an unrestricted area.

BASES FOR DLCO 3.6.20 AND DSR 4.6.20 RADIOLOGICAL ENVIRONMENTAL MONITORING PROGRAM

The radiological environmental monitoring program required by this control provides representative measurements of radiation and of radioactive materials in those exposure pathways and for those radionuclides that lead to the highest potential radiation exposures of members of the public resulting from the station operation. This monitoring program implements Section IV.B.2 of Appendix I to 10CFR Part 50 and thereby supplements the radiological effluent monitoring program by verifying that the measurable concentrations of radioactive materials and levels of radiation are not higher than expected on the basis of the effluent measurements and the modeling of the environmental exposure pathways. Guidance for this monitoring program is provided by the Radiological Assessment Branch Technical Position on Environmental Monitoring. The initially specified monitoring program will be effective for at least the first three years of commercial operation. Following this period, program changes may be initiated based on operational experience.

The required detection capabilities for environmental sample analyses are tabulated in terms of the lower limits of detection (LLDs). The LLDs required by Table D 4.6.20-1 are considered optimum for routine environmental measurements in industrial laboratories. It should be recognized that the LLD is defined as a before the fact limit representing the capability of a measurement system and not as an after the fact limit for a particular measurement.

Detailed discussion of the LLD, and other detection limits, can be found in HASL Procedures Manual, HASL-300 (revised annually), Currie, L.A., "Limits for Qualitative Detection and Quantitative Determination - Application to Radiochemistry," Anal. Chem 40, 586-93 (1968) and Hartwell, J.K., "Detection Limits for Radioanalytical Counting Techniques," Atlantic Richfield Hanford Company Report ARH-SA-215 (June 1975).

BASES FOR DLCO 3.6.21 AND DSR 4.6.21 INTERLABORATORY COMPARISON PROGRAM

The requirement for participation in an approved Interlaboratory Comparison Program is provided to ensure that independent checks on the precision and accuracy of the measurements of radioactive material in environmental sample matrices are performed as part of the quality assurance program for environmental monitoring for the purposes of Section IV.B.2 of Appendix I to 10CFR Part 50.

BASES FOR DLCO 3.6.22 AND DSR 4.6.22 LAND USE CENSUS

This control is provided to ensure that changes in the use of areas at and beyond the site boundary are identified and that modifications to the radiological environmental monitoring program are made if required by the results of this census. The best survey information such as from a door-to-door survey(s), from an aerial survey or from consulting with local agricultural authorities shall be used. This census satisfies the requirements of Section IV.B.3 of Appendix I to 10CFR Part 50.

In lieu of a garden census, the significance of the exposure via the garden pathway can be evaluated by the sampling of vegetation as specified in Table D 3.6.20-1.

A milk sampling location, as defined in Section 1, requires that at least 10 milking cows are present at a designated milk sample location. It has been found from past experience, and as a result of conferring with local farmers, that a minimum of 10 milking cows is necessary to guarantee an adequate supply of milk twice per month for analytical purposes. Locations with less than 10 milking cows are usually utilized for breeding purposes which eliminates a stable supply of milk for samples as a result of suckling calves and periods when the adult animals are dry.

PART I – RADIOLOGICAL EFFLUENT CONTROLS

Section 6.0 Administrative Controls

6.0 ADMINISTRATIVE CONTROLS

The ODCM Specifications are subject to Technical Specification Section 6.6.2, "Annual Radiological Environmental Operating Report," Section 6.6.3, "Radioactive Effluent Release Report," Section 6.5.1, "Offsite Dose Calculation Manual (ODCM)," and Section 6.5.3, "Radioactive Effluent Controls Program."

D 6.9 Reporting Requirements

D 6.9.1.d Annual Radiological Environmental Operating Report

The Annual Radiological Environmental Operating Report shall include a comparison with operational controls as appropriate, and with environmental surveillance reports from the previous 5 years, and an assessment of the observed impacts of the plant operation on the environment. The report shall also include the results of land use censuses required by Control DLCO 3.6.22.

The report shall also include the following: a summary description of the radiological environmental monitoring program; at least two legible maps** covering all sampling locations keyed to a table giving distances and directions from the centerline of one reactor; the results of licensee participation in the Interlaboratory Comparison Program, required by Control DLCO 3.6.21; discussion of all deviations from the sampling schedule of Table D 3.6.20-1; and discussion of all analyses in which the LLD required in Table D 4.6.20-1 was not achievable.

** One map shall cover stations near the site boundary; a second shall include the more distant stations.

D 6.9.1.e Radioactive Effluent Release Report

The Radioactive Effluent Release Report shall include a summary of the quantities of radioactive liquid and gaseous effluents and solid waste releases from the unit as outlined in Regulatory Guide 1.21, "Measuring, Evaluating, and Reporting Radioactivity in Solid Wastes and Releases of Radioactive Materials in Liquid and Gaseous Effluents from Light-Water-Cooled Nuclear Power Plants", Revision 1, June 1974, with data summarized on a quarterly basis following the format of Appendix B thereof.

The Radioactive Effluent Release Report shall include an annual summary of hourly meteorological data collected over the previous year. This annual summary may be either in the form of an hour-by-hour listing on magnetic tape of wind speed, wind direction, atmospheric stability, and precipitation (if measured), or in the form of joint frequency distributions of wind speed, wind direction, and atmospheric stability.* This same report shall include an assessment of the radiation doses from radioactive liquid and gaseous effluents to members of the public due to their activities inside the site boundary (Part II Figure 5.1.3-1) during the reporting period. All assumptions used in making these assessments, i.e., specific activity, exposure time and location, shall be included in these reports. The assessment of radiation doses shall be performed in accordance with the methodology and parameters in Part II.

The Radioactive Effluent Release Report shall also include an assessment of radiation doses to the likely most exposed member of the public from reactor releases and other nearby uranium fuel cycle sources, including doses from primary effluent pathways and direct radiation, for the previous calendar year to show conformance with 40 CFR Part 190, Environmental Radiation Protection Standards for Nuclear Power Operation. Acceptable methods for calculating the doses from liquid and gaseous effluents are given in Part II.

* In lieu of submission with the Radioactive Effluent Release Report, the licensee has the option of retaining this summary of required meteorological data on site in a file that shall be provided to the NRC upon request.

The Radioactive Effluent Release Reports shall include a list of unplanned releases from the site to unrestricted areas of radioactive materials in gaseous and liquid effluents made during the reporting period.

The Radioactive Effluent Release Reports shall include the following information for each class of solid waste (as defined by 10 CFR Part 61) shipped offsite during the report period.

a. Container volume,

b. Total curie quantity (specify whether determined by measurement or estimate),

c. Principal radionuclides (specify whether determined by measurement or estimate),

d. Source of waste and processing employed (e.g., dewatered spent resin, compacted dry waste, evaporator bottoms),

e. Type of container (e.g., LSA, Type A, Type B, Large Quantity), and,

f. Solidification agent or absorbent (e.g., cement)

The Radioactive Effluent Release Reports shall include any changes made during the reporting period to the Process Control Program (PCP) and to the Offsite Dose Calculation Manual (ODCM), as well as a listing of new locations for dose calculations and/or environmental monitoring identified by the land use census pursuant to Control DLCO 3.6.22.

Changes to the Process Control Program (PCP) shall be reported to the Commission in the Radioactive Effluent Release Report for the period in which the change(s) was made. This submittal shall contain:

a. Sufficiently detailed information to totally support the rationale for the change without benefit of additional or supplemental information;

b. A determination that the change did not reduce the overall conformance of the solidified waste product to existing criteria for solid wastes; and

c. Documentation of the fact that the change has been reviewed and found acceptable.

Changes to the Offsite Dose Calculation Manual (ODCM) shall be in accordance with Technical Specification 6.5.1, "Offsite Dose Calculation Manual (ODCM)".

D 6.9.3 Special Reports

Special reports shall be submitted in accordance with 10 CFR 50.4 to the Regional Office within the time period specified for each report. These reports shall be submitted covering the activities identified below pursuant to the requirements of the applicable reference specification:

a.
b.
c.
d.
e.
f.
g.

Not applicable to RETS

h. Calculate Dose from Liquid Effluent in Excess of Limits, Control DLCO 3.6.15.a(2) (30 days from the end of the affected calendar quarter).

i. Calculate Air Dose from Noble Gases Effluent in Excess of Limits, Control DLCO 3.6.15.b(2) (30 days from the end of the affected calendar quarter).

j. Calculate Dose from I-131, H-3 and Radioactive Particulates with half lives greater than eight days in Excess of Limits, Control DLCO 3.6.15.b(3)(b) (30 days from the end of the affected calendar quarter).

k. Caculated Doses from Uranium Fuel Cycle Source in Excess of Limits, Control DLCO 3.6.15.d (30 days from the end of the affected calendar year).

l. Nonfunctional Gaseous Radwaste Treatment System, Control DLCO 3.6.16.b (30 days from the end of the affected calendar year).

m. Environmental Radiological Reports. With the level of radioactivity (as the result of plant effluents) in an environmental sampling media exceeding the reporting level of Table D 6.9.3-1, when averaged over any calendar quarter, in lieu of a Licensee Event Report, prepare and submit to the Commission within thirty (30) days from the end of the calendar quarter a special report identifying the cause(s) for exceeding the limits, and define the corrective action to be taken.

Table D 6.9.3-1
REPORTING LEVEL FOR RADIOACTIVITY CONCENTRATIONS IN ENVIRONMENTAL SAMPLES

REPORTING LEVELS

Analysis	Water (pCi/l)	Airborne Particulate or Gases (pCi/m^3)	Fish (pCi/kg, wet)	Milk (pCi/l)	Food Products (pCi/kg, wet)
H-3	20,000*				
Mn-54	1,000		30,000		
Fe-59	400		10,000		
Co-58	1,000		30,000		
Co-60	300		10,000		
Zn-65	300		20,000		
Zr-95, Nb-95	400				
I-131	2**	0.9		3	100
Cs-134	30	10.0	1,000	60	1,000
Cs-137	50	20.0	2,000	70	2,000
Ba/La-140	200			300	

* For drinking water samples. This is a 40 CFR 141 value. If no drinking water pathway exists, a value of 30,000 pCi/liter may be used.

** If no drinking water pathway exists, a value of 20 pCi/liter may be used.

PART II – CALCULATION METHODOLOGIES

1.0 LIQUID EFFLUENTS

1.1 Setpoint Determinations

1.1.1 Basis

Monitor setpoints will be established such that the concentration of radionuclides in the liquid effluent releases in the discharge canal shall be limited to ten times the concentrations specified in 10 CFR 20, Appendix B, Table 2, Column 2 for radionuclides other than dissolved or entrained noble gases. For dissolved or entrained noble gases, the concentration shall be limited to 2E-04 μCi/ml total activity. Setpoints for the Service Water System Effluent Line will be calculated quarterly based on the radionuclides identified during the previous year's releases from the liquid radwaste system or the isotopes identified in the most recent radwaste release or other identified probable source. Setpoints for the Liquid Radwaste Effluent Line will be based on the radionuclides identified in each batch of liquid waste prior to its release.

After release, the Liquid Radwaste monitor setpoint may remain as set, or revert back to a setpoint based on a previous Radioactive Effluent Release Report, or install blank flange in the discharge line and declare nonfunctional in accordance with the ODCM Part I.

Since the Service Water System effluent monitor and Liquid Radwaste effluent monitor can only detect gamma radiation, the alarm setpoints are calculated by using the concentration of gamma emitting isotopes only (or the corresponding Maximum Effluent Concentration (MEC) values for the same isotopes, whichever are higher) in the $\sum_i (\mu Ci/ml)_{i\gamma}$ expression (Section 1.1.2, 1.1.3).

The Required Dilution Factor (RDF) is calculated using concentrations of all isotopes present (or the corresponding MEC values for the same isotopes, whichever are higher) including tritium and other non-gamma emitters to ensure that all radionuclides in the discharge canal do not exceed Technical Specifications Radioactive Effluent Controls Program limits.

1.1.2 Service Water System Effluent Line Alarm Setpoint

The detailed methods for establishing setpoints for the Service Water System Effluent Line Monitor shall be contained in the Nine Mile Point Station Procedures. These methods shall be in accordance with the following:

The General Setpoint Equation is Setpoint < $\frac{\text{(Conservative Factor) (Concentration)(ADF)(CF)}}{\text{RDF}}$

From the above General Setpoint Equation the Hi and Alert alarms are calculated as follows:

$$\text{Setpoint (Hi alarm)} < 0.9 \frac{\Sigma_i (\mu Ci / ml)_{i\gamma} (CF) TEDF / F_{sw}}{\Sigma_i [(\mu Ci / ml)_{iT} / MEC_i]} + \text{background}$$

$$\text{Setpoint (Alert alarm)} < 0.7 \frac{\Sigma_i (\mu Ci / ml)_{i\gamma} (CF) TEDF / F_{sw}}{\Sigma_i [(\mu Ci / ml)_{iT} / MEC_i]} + \text{background}$$

$(\mu Ci/ml)_{i\gamma}$ = concentration of gamma emitting isotope i in the sample, or the corresponding MEC of gamma emitting isotope i $(MEC)_i$, whichever is higher (units = μCi/ml).

1.1.2 Service Water System Effluent Line Alarm Setpoint (Cont'd)

$(\mu Ci/ml)_{iT}$ = concentration of any radioactive isotope i in the sample including tritium and other non-gamma emitters or corresponding MEC of isotope i, MEC_i, whichever is higher (units = μCi/ml).

TF = Tempering Fraction

TDF = Total Dilution Flow (units = gallons/minute).

TEDF = Total Effective Dilution Flow = TDF (1-TF) (units = gallons/minute)

F_{sw} = Service Water Flow (units = gallons/minute).

CF = Monitor calibration factor (units = net cpm/μCi/ml).

MEC_i = Maximum Effluent Concentration, ten times the Effluent Concentration for radionuclide i as specified in 10 CFR 20, Appendix B, Table 2, Column 2 (units μCi/ml).

Sample = Those nuclides present in the previous batch release from the liquid radwaste effluent system or those nuclides present in the last Radioactive Effluent Release Report (units = μCi/ml) or those nuclides present in the service water system.**

$(MEC)_{i\gamma}$ = same as MEC_i but for gamma emitting nuclides only.

0.9 and 0.7= factors of conservatism to account for inaccuracies.

RDF = Required Dilution Factor, $\sum_i [(\mu Ci/ml)_{iT}/MEC_i]$. If MEC values are used in the $(\mu Ci/ml)_{i\gamma}$, they must also be used in calculating RDF (numerator). RDF= FMEC (See Section II-1.2).

ADF = Actual Dilution Factor, $TEDF/F_{sw}$

** For periods with known reactor water to Reactor Building Closed Loop Cooling (RBCLC) system leakage, RBCLC concentration may be prudently substituted for the above.

1.1.3 Liquid Radwaste Effluent Line Alarm Setpoint

The detailed methods for establishing setpoints for the Liquid Radwaste Effluent Line Monitor shall be contained in the Nine Mile Point Station Procedures. These methods shall be in accordance with the following:

The General Setpoint Equation in Section II-1.1.2 is used to develop the Hi-Hi and Hi alarm setpoints below:

$$\text{Setpoint (Hi-Hi alarm)} < 0.9 \frac{\Sigma_i (\mu Ci / ml)_{i\gamma} (CF) TEDF \ / F_{re}}{\Sigma_i [(\mu Ci / ml)_{iT} \ / MEC_i]} + \text{background}$$

1.1.3 Liquid Radwaste Effluent Line Alarm Setpoint (Cont'd)

$$\text{Setpoint (Hi alarm)} < 0.7 \frac{\Sigma_i (\mu Ci / ml)_{i\gamma} (CF) TEDF \ / F_{re}}{\Sigma_i [(\mu Ci / ml)_{iT} / MEC_i]} + \text{background}$$

$(\mu Ci/ml)_{i\gamma}$ = concentration of gamma emitting isotope i in the sample or the corresponding MEC of gamma emitting isotope i, $(MEC)_i$ whichever is higher.

$(\mu Ci/ml)_{iT}$ = concentration of any radioactive isotope i in the sample including tritium and other non-gamma emitters or the corresponding MEC of isotope i, MEC_i, whichever is higher. (units = μCi/ml).

TF = Tempering Fraction

TDF = Total Dilution Flow (units = gallons/minute).

TEDF = Total Effective Dilution Flow = TDF (1-TF) (units = gallons/minute)

F_{re} = Radwaste Effluent Flow (units = gallons/minute).

CF = Monitor calibration factor (units = net cps/μCi/ml).

MEC_i = Maximum Effluent Concentration, ten times the Effluent Concentration for radionuclide i as specified in 10 CFR 20, Appendix B, Table 2, Column 2, for those nuclides detected by spectral analysis of the contents of the radwaste tanks to be released. (units = μCi/ml)

$(MEC)_{i\gamma}$ = same as MEC_i but for gamma emitting nuclide only.

0.9 and 0.7 = factors of conservatism to account for inaccuracies.

RDF = Required Dilution Factor, $\sum_i [(\mu Ci/ml)_{iT}/MEC_i]$.
If MEC values are used in the $(\mu Ci/ml)_{i\gamma}$, they must also be used in calculating RDF (numerator).

ADF = Actual Dilution Factor = $TEDF/F_{re}$

Notes:

(a) If $TEDF/F_{re} = \sum_i [(\mu Ci/ml)_{iT}/MEC_i]$ (if ADF = RDF)

the discharge could not be made, since the monitor would be continuously in alarm. To avoid this situation, F_{re} will be reduced (normally by a factor of 2) to allow setting the alarm point at a concentration higher than tank concentration. This will also result in a discharge canal concentration at approximately 50% Maximum Effluent Concentration.

(b) TF is tempering fraction (i.e., diversion of some fraction of discharge flow to the intake canal for the purpose of temperature control).

1.1.4 Discussion

1.1.4.1 Control of Liquid Effluent Batch Discharges

At Nine Mile Point Unit 1 Liquid Radwaste Effluents are released only on a batch mode. To prevent the inadvertent release of any liquid radwaste effluents, radwaste discharge is mechanically isolated (blank flange installed or discharge valve chain-locked closed) following the completion of a batch release or series of batch releases.

This mechanical isolation remains in place and will only be removed prior to the next series of liquid radwaste discharges after all analyses required in station procedures and Table D 4.6.15-1A of Part I are performed and monitor setpoints have been properly adjusted.

1.1.4.2 Simultaneous Discharges of Radioactive Liquids

If during the discharge of any liquid radwaste batch, there is an indication that the service water canal has become contaminated (through a service water monitor alarm or through a grab sample analysis in the event that the service water monitor is nonfunctional) the discharge shall be terminated immediately. The liquid radwaste discharge shall not be continued until the cause of the service water alarm (or high grab sample analysis result) has been determined and the appropriate corrective measures taken to ensure ten times the effluent concentrations specified in 10CFR20, Appendix B, Table 2, Column 2 (Section D 3.6.15.a(1) of Part I) are not exceeded. In accordance with Liquid Waste procedures, controls are in place to preclude a simultaneous release of liquid radwaste batch tanks. In addition, an independent verification of the discharge valve line-up is performed prior to discharge to ensure that simultaneous discharges are prevented.

1.1.4.3 Sampling Representativeness

This section covers Part I Table D 4.6.15-1 Note b concerning thoroughly mixing of each batch of liquid radwaste prior to sampling.

Liquid Radwaste Tanks scheduled for discharge at Nine Mile Point Unit 1 are isolated (i.e. inlet valves marked up) and at least three tank volumes of entrained fluids are recirculated prior to sampling. Minimum recirculation time is calculated as follows:

Minimum Recirculation Time = 3.0(T/R)

Where:
3.0 = Plant established mixing factor, unitless
T = Tank volume, gal
R = Recirculation flow rate, gpm

Additionally, the Hi Alarm setpoint of the Liquid Radwaste Effluent Radiation Monitor is set at a value corresponding to not more than 70% of its calculated response to the grab sample or corresponding MEC values. Thus, this radiation monitor will alarm if the grab sample, or corresponding MEC value, is significantly lower in activity than any part of the tank contents being discharged.

1.1.4.4 Liquid Radwaste System Operation

Part I Section DLCO 3.6.16.a requires that the liquid radwaste system shall be used to reduce the radioactive materials in liquid wastes prior to their discharge, as necessary, to meet the concentration and dose requirements of Section DLCO 3.6.15.

Utilization of the radwaste system will be based on the capability of the indicated components of each process system to process contents of the respective low conductivity and high conductivity collection tanks:

1) Low Conductivity (Equipment Drains): Radwaste Filter and Radwaste Demin. (See Fig. D-1) or modular waste water technology ("THERMEX")

2) High Conductivity (Floor Drains): Waste Evaporator (See Fig. D-1) or modular waste water technology ("THERMEX") directly to the Waste Collector Tank or the Waste Sample Tanks.

Cumulative dose contributions from liquid effluents for the current calendar quarter and the current calendar year shall be determined as described in Section II-1.3 of this manual prior to the release of each batch of liquid waste. This same dose projection of Section II-1.3 will also be performed in the event that untreated liquid waste is discharged, to ensure that the dose limits of Part I DLCO 3.6.15.a(2) are not exceeded. (Thereby implementing the requirements of 10CFR50.36a, General Design Criteria 60 of Appendix A and the Design Objective given in Section II-D of Appendix I to 10 CFR50).

For the purpose of dose projection, the following assumptions shall be made with regard to concentrations of non-gamma emitting radionuclides subsequently analyzed:

a) [H-3] ≤ H-3 Concentration found recent condensate storage tank analysis

b) [Sr-89] ≤ 4 x Cs-137 Concentration

c) [Sr-90] ≤ 0.5 x Cs-137 Concentration

d) [Fe-55] ≤ 1 x Co-60 Concentration

Assumed Scaling Factors used in b, c, and d above represent conservative estimates derived from analysis of historical data from process waste streams. Following receipt of H-3, Sr-89, Sr-90 and Fe-55 analysis information, dose estimates shall be revised using actual radionuclide concentrations and actual tank volumes discharged.

1.1.4.5 Service Water System Contamination

Service water is normally non-radioactive. If contamination is suspected, as indicated by a significant increase in service water effluent monitor response, grab samples will be obtained from the service water discharge lines and a gamma isotopic analysis meeting the LLD requirements of Part I Table D 4.6.15-1 completed. If it is determined that an inadvertent radioactive discharge is occurring from the service water system, then:

a) A 10CFR 50.59 review shall be performed (ref. I&E Bulletin 80-10),

b) daily service water effluent samples shall be taken and analyzed for principal gamma emitters until the release is terminated,

c) an incident composite shall be prepared for H-3, gross alpha, Sr-89, Sr-90 and Fe-55 analyses and,

d) dose projections shall be performed in accordance with Section II-1.3 of this manual (using estimated concentrations for H-3, Sr-89, Sr-90 and Fe-55 to be conservatively determined by supervision at the time of the incident).

Additionally, service water effluent monitor setpoints may be recalculated using the actual distribution of isotopes found from sample analysis.

When contamination is indicated by quantitative non-gamma emitter results, sample and analyze gamma and non-gamma emitters weekly.

1.2 Liquid Effluent Concentration Calculation

This calculation documents compliance with Part I Section DLCO 3.6.15.a (1).

The concentration of radioactive material released in liquid effluents to unrestricted areas (see Figure 5.1.3-1) shall be limited to ten times the effluent concentrations specified in 10CFR20, Appendix B, Table 2, Column 2, for radionuclides other than dissolved or entrained noble gases. For dissolved or entrained noble gases, the concentration shall be limited to 2 E-4 microcurie/milliliter (μCi/ml) total activity at the point of discharge. For dissolved and entrained noble gases, this limit may also be satisfied by using 2E-4 μCi/ml as the MEC for each noble gas.

The concentration of radioactivity from Liquid Radwaste batch releases and, if applicable, Service Water System and emergency condenser start-up vent discharges are included in the calculation. The calculation is performed for a specific period of time. No credit taken for averaging. The limiting concentration is calculated as follows:

$$FMEC = \sum_{i} [(\sum_{s} C_{is}F_s) / (MEC_i \sum_{s} F_s)]$$

1.2 Liquid Effluent Concentration Calculation (Cont'd)

Where:

FMEC	=	The fraction of Maximum Effluent Concentration, the ratio at the point of discharge of the actual concentration to ten times the Effluent Concentration of 10 CFR 20, Appendix B, Table 2, Column 2 for radionuclides other than dissolved or entrained noble gases. For noble gases, the concentration shall be limited to 2 E-4 microcurie/ml total activity.
$C_{is}=(\mu Ci/ml)_{is}$	=	The concentration of nuclide i in particular effluent stream s, μCi/ml.
F_s	=	The flow rate of a particular effluent stream s, gpm.
MEC_i	=	Maximum Effluent Concentration, ten times the Effluent Concentration of a specific nuclide i from 10CFR20, Appendix B, Table 2, Column 2 (noble gas limit is 2E-4 μCi/ml).
$\sum_s (C_{is}F_s)$	=	The total activity rate of nuclide i, in all effluent streams s.
$\sum_s (F_s)$	=	The total flow rate of all effluent streams s, gpm (including those streams which do not contain radioactivity).

A value of less than one for FMEC is considered acceptable for compliance with Part I Section DLCO 3.6.15.a.(1).

1.3 Dose Determinations

1.3.1 Maximum Dose Equivalent Pathway

A dose assessment report was prepared for the Nine Mile Point Unit 1 facility by Charles T. Main, Inc., of Boston, MA. This report presented the calculated dose equivalent rates to individuals as well as the population within a 50-mile radius of the facility based on the radionuclides released in liquid and gaseous effluents during the time periods of 1 July 1980 through 31 December 1980 and from January 1981 through 31 December 1981. The radwaste liquid releases are based on a canal discharge rate of 590 ft^3/sec which affects near field and far field dilution; therefore, this report is specific to this situation. Utilizing the effluent data contained in the Annual Radioactive Effluent Release Reports as source terms, dose equivalent rates were determined using the environmental pathway models specified in Regulatory Guides 1.109 and 1.111 as incorporated in the NRC computer codes LADTAP for liquid pathways, and XOQDOQ and GASPAR for gaseous effluent pathways. Dose equivalent rates were calculated for the total body as well as seven organs and/or tissues for the adult, teen, child, and infant age groups. From the standpoint of liquid effluents, the pathways evaluated included fish and drinking water ingestion, and external exposure to water and sediment.

1.3.1 Maximum Dose Equivalent Pathway (Cont'd)

The majority of the dose for a radwaste liquid batch release was received via the fish pathway. However, to comply with Part I Specifications for dose projections, the drinking water and sediment pathways are included. Therefore, all doses due to liquid effluents are calculated monthly for the fish and drinking water ingestion pathways and the sediment external pathway from all detected nuclides in liquid effluents released to the unrestricted areas to each organ. The dose projection for liquid batch releases will also include discharges from the emergency condenser vent as applicable, for all pathways. Each age group dose factor, A_{iat}, is given in Tables 2-1 to 2-8. To expedite time, the dose is calculated for a maximum individual instead of each age group. This maximum individual will be a composite of the highest dose factor of each age group for each organ, hence A_{it}. The following expression from NUREG 0133, Section 4.3 is used to calculate dose:

$$D_t = \sum_i [A_{it} \sum_L (\Delta T_L C_{iL} F_L)]$$

Where:

D_t = The cumulative dose commitment to the total body or any organ, from the liquid effluents for the total time period (ΔT_L), mrem.

ΔT_L = The length of the L th time period over which C_{iL} and F_L are averaged for all liquid releases, hours.

C_{iL} = The average concentration of radionuclide, i, in undiluted liquid effluents during time period ΔT_L from any liquid release, µCi/ml.

A_{it} = The site related ingestion dose commitment factor to the total body or any organ t for each identified principal gamma or beta emitter for a maximum individual, mrem/hr per µCi/ml.

F_L = The near field average dilution factor for C_{iL} during any liquid effluent release. Defined as the ratio of the maximum undiluted liquid waste flow during release to the average flow from the site discharge structure to unrestricted receiving waters, unitless.

A_{iat} values for radwaste liquid batch releases at a discharge rate of 295 ft^3/sec (one circulating water pump in operation) are presented in tables 2-1 to 2-4. A_{iat} values for an emergency condenser vent release are presented in tables 2-5 to 2-8. The emergency condenser vent releases are assumed to travel to the perimeter drain system and released from the discharge structure at a rate of .33 ft^3/sec. See Appendix A for the dose factor A_{iat} derivation. To expedite time the dose is calculated to a maximum individual. This maximum individual is a composite of the highest dose factor A_{iat} of each age group a for each organ t and each nuclide i. If a nuclide is detected for which a factor is not listed, then it will be calculated and included in a revision to the ODCM.

All doses calculated in this manner for each batch of liquid effluent will be summed for comparison with quarterly and annual limits, added to the doses accumulated from other releases in the quarter and year of interest. In all cases, the following relationships will hold:

1.3.1 Maximum Dose Equivalent Pathway (Cont'd)

For a calendar quarter:

$D_t \leq 1.5$ mrem total body

$D_t \leq 5$ mrem for any organ

For the calendar year:

$D_t \leq 3.0$ mrem total body

$D_t \leq 10$ mrem for any organ

Where:

D_t = total dose received to the total body or any organ due to liquid effluent releases.

If these limits are exceeded, a special report will be submitted to the NRC identifying the cause and proposed corrective actions. In addition, if these limits are exceeded by a factor of two, calculations shall be made to determine if the dose limits contained in 40 CFR 190 have been exceeded. Dose limits, as contained in 40 CFR 190 are total body and organ doses of 25 mrem per year and a thyroid dose of 75 mrem per year.

These calculations will include doses as a result of liquid and gaseous pathways as well as doses from direct radiation. The liquid pathway analysis will only include the fish and sediment pathways since the drinking water pathway is insignificant. This pathway is only included in the station's effluent dose projections to comply with Part I Specifications. Liquid, gaseous and direct radiation pathway doses will consider the James A. FitzPatrick and Nine Mile Point Unit 2 facilities as well as Nine Mile Point Unit 1 Nuclear Station and the on-site ISFSI facilities.

In the event the calculations demonstrate that the 40 CFR 190 dose limits, as defined above, have been exceeded, then a report shall be prepared and submitted to the Commission within 30 days as specified in Part I Section DLCO 3.6.15.d.

Section 3.0 of the ODCM contains more information concerning calculations for an evaluation of whether 40 CFR 190 limits have been exceeded.

1.3.2 Dose Projections – Determinations of the Need to Operate the Liquid Radwaste Treatment System

1.3.2.1 Requirements

DLCO 3.6.16.a requires that the liquid radwaste system be used to reduce the radioactive materials in liquid wastes prior to their discharge when the projected doses due to the liquid effluent would exceed 0.06 mrem to the total body or 0.2 mrem to any organ for the batch. This Control implements Technical Specification 6.5.3.f that requires the Radioactive Effluent Controls Program to include limitations on the functional capability and use of the liquid effluent treatment system to ensure the appropriate portion of this system is used to reduce releases of radioactivity. This is required when the projected doses would exceed 0.06 mrem to the total body and 0.2 mrem to any organ. Since releases are performed much less frequently than once per month, doses are to be projected prior to each release and the above limits will be applied on a batch basis.

1.3.2.2 Methodology

The dose projection for each batch is calculated in the same manner as cumulative dose calculations for the current calendar quarter and current calendar year. See II-1.1.4.4 and II-1.3.1. If the calculated dose is greater than 0.06 mrem to the total body or 0.2 mrem to any organ, the appropriate subsystems of the liquid radwaste system shall be used to reduce the radioactivity levels of the batch prior to release.

1.3.2.3 Continuous Liquid Release Dose Projections

Each month that a continuous liquid release is in progress, or is anticipated, the expected dose to man can be accounted for or projected. Since a continuous release does not result from not operating a portion of the Liquid Radwaste System, projections are not required to determine or evaluate Radwaste System Functionality. Dose projections may be relevant to planning repairs, and in reporting intended actions. See II-1.1.4.5.

2.0 GASEOUS EFFLUENTS

2.1 Setpoint Determinations

2.1.1 Basis

Stack gas monitor setpoints will be established such that the instantaneous release rate of radioactive materials in gaseous effluents does not exceed the 10 CFR 20 limits for annual release rate. The setpoints will be activated if the instantaneous dose rate at or beyond the (land) site boundary would exceed 500 mrem/yr to the whole body or 3000 mrem/yr to the skin from the continuous release of radioactive noble gas in the gaseous effluent.

The offgas (condenser air ejector activity) monitor setpoints provide assurance that the total body exposure to an individual at the exclusion area boundary does not exceed a small fraction of the dose guidelines of 10 CFR 100.

Emergency condenser vent monitor setpoints will be established such that the release rate for radioactive materials in gaseous effluents do not exceed the Technical Specification dose rate limits. Monitor setpoints for emergency condenser vent monitors are conservatively fixed at 5 mr/hr for reasons described in Section II-2.1.4 and therefore do not require periodic recalculations.

Monitor setpoints from continuous release points will be determined once per quarter under normal release rate conditions and will be based on the isotopic composition of the actual release in progress, or an offgas isotopic distribution or a more conservative default composition specified in the pertinent procedure. If the calculated setpoint is higher than the existing setpoint, it is not mandatory that the setpoint be changed.

Under abnormal site release rate conditions, monitor alarm setpoints from continuous release points will be recalculated and, if necessary, reset at more frequent intervals as deemed necessary by Chemistry Supervision. In particular, contributions from both JAF and NMP-2 and the Emergency Condenser Vents shall be assessed.

During outages and until steady state power operation is again realized, the last operating stack and off gas monitor alarm setpoints shall be used.

Since monitors respond to noble gases only, monitor alarm points are set to alarm prior to exceeding the corresponding whole body dose rates.

The skin dose rate limit is not used in setpoint calculations because it is never limiting.

2.1.2 Stack Monitor Setpoints

The detailed methods for establishing setpoints shall be contained in the station procedures. These methods shall apply the following general criteria:

(1) Rationale for Stack monitor settings is based on the general equation:

$$\frac{\text{release rate, actual}}{\text{corresp. dose rate, actual}} = \frac{\text{release rate, max. allowable}}{\text{corresp. dose rate, max. allowable}}$$

$$\frac{\sum_i Q_i}{\sum_i Q_i \left(V_i + (SF) K_i (X/Q)_s\right)} = \frac{(Q)\max}{500\, mrem/yr}$$

2.1.2 Stack Monitor Setpoints (Cont'd)

Where:

Q_i = release rate for each isotope i, μCi/sec.

V_i = gamma whole body dose factor in units of mrem/yr per μCi/sec. (See Table 3-2).

$(Q)_{max}$ = instantaneous release rate limit μCi/sec.

SF, K_i, X/Q = See Section II-2.2.1.1.

(2) To ensure that Part I dose rate limits are not exceeded, the Hi Hi alarms on the stack monitors shall be set lower than or equal to (0.9) $(Q)_{max}$. Hi alarms shall be set lower than or equal to (0.5) $(Q)_{max}$.

(3) Based on the above conservatism, the dose contribution from JAF and NMP-2 can usually be ignored. During Emergency Classifications at JAF or NMP-2 due to airborne effluent, or after emergency condenser vent releases of significant proportions, the 500 mrem/yr value may be reduced accordingly.

(4) To convert monitor gross count rates to μCi/sec release rates, the following general formula shall be applied:

$(C_m\text{-}B)\ K_s = Q =$ μCi/sec, release rate

Where:

C_m = monitor gross count rate in cps or cpm

B = monitor background count rate

K_s = stack monitor efficiency factor with units of μCi/sec-cps or μCi/sec-cpm

(5) Monitor K_s factors shall be determined using the general formula:

$$K_s = \sum {}_i Q_i/(C_m\text{-}B)$$

Where:

Q_i = individual radionuclide stack effluent release rate as determined by isotopic analysis.

K_s factors more conservative than those calculated by the above methodology may be assumed.

Alternatively, when stack release rates are near the lower limit of detection, the following general formula may be used to calculate K_s:

$$1/K_s = \frac{E}{f} = \frac{(\sum_i F_i \sum_k Y_k E_k)\ (3.7E4 \text{ dis/sec per } \mu Ci)}{f}$$

Where:

f = stack flow in cc/sec.

E = efficiency in units of cpm-cc/μCi or cps-cc/μCi (cpm = counts per minute; cps = counts per second).

E_k = cpm-cc/bps or cps-cc/γps.

From energy calibration curve produced during NIST traceable primary gas calibration or transfer source calibration (bps = beta per second;γps = gammas per second).

2.1.2 Stack Monitor Setpoints (Cont'd)

Y_k = b/d (betas/disintegration) or γ/d (gammas/disintegration).

F_i = Activity fraction of nuclide i in the mixture.

i = nuclide counter.

k = discrete energy beta or gamma emitter per nuclide counter.

s = seconds.

This monitor calibration method assumes a noble gas distribution typical of a recoil release mechanism. To ensure that the calculated efficiency is conservative, beta or gamma emissions whose energy is above the range of calibration of the detector are not included in the calculation.

2.1.3 Recombiner Discharge (Off Gas) Monitor Setpoints

(1) The Hi-Hi alarm points shall activate with recombiner discharge rates equal to or less than 500,000 μCi/sec. This alarm point may be set equal to or less than 1 Ci/sec for a period of time not to exceed 60 days provided the offgas treatment system is in operation. According to Part I, Note (c) to Table D 4.6.14-2, the channel functional test of the condenser air ejector radioactivity monitor shall demonstrate that automatic isolation of this pathway occurs if either of the following conditions exist:

i) Instruments indicate two channels above the Hi-Hi alarm setpoint,

ii) Instruments indicate one channel above Hi-Hi alarm setpoint and one channel downscale.

This automatic isolation function is tested once per operating cycle in accordance with station procedures.

(2) The Hi alarm points shall be set to activate at equal to or less than five (5) times normal full power background.

If the monitor alarms at this setpoint, the offgas will be immediately sampled and analyzed, followed by an analysis of reactor coolant sample.

(3) To convert monitor mR/hr readings to μCi/sec, the formula below shall be applied:

$(R)(K_R)$ = Q_R μCi/sec recombiner discharge release rate

Where:

R = mR/hr monitor indicator.

K_R = efficiency factor in units of μCi/sec/mR/hr determined prior to setting monitor alarm points.

(4) Monitor K_R factors shall be determined using the general formula:

$$K_R = \sum {}_iQ_i/R$$

Where:

Q_i = individual radionuclide recombiner discharge release rate as determined by isotopic analysis and flow rate monitor.

K_R factors more conservative than those calculated by the above methodology may be assumed.

2.1.3 Recombiner Discharge (Off Gas) Monitor Setpoints (Cont'd)

(5) The setpoints chosen provide assurance that the total body exposure to an individual at the exclusion area boundary will not exceed a very small fraction of the limits of 10CFR Part 100 in the event this effluent is inadvertently discharged directly to the environment without treatment (thereby implementing the requirements of General Design Criteria 60 and 64 of Appendix A to 10CFR Part 50). Additionally, these setpoints serve to limit buildup of fission product activity within the station systems which would result if high fuel leakage were to be permitted over extended periods.

2.1.4 Emergency Condenser Vent Monitor Setpoint

The monitor setpoint was established by calculation ("Emergency Condenser Vent Monitor Alarm Setpoint", January 13, 1986, NMPC File Code #16199). Assuming a hypothetical case with (1) reactor water iodine concentrations higher than the Technical Specification Limit, (2) reactor water noble gas concentrations higher than would be expected at Technical Specification iodine levels, and (3) leakage of reactor steam into the emergency condenser shell at 300% of rated flow (or 1.3 E6 lbs/hr), the calculation predicts an emergency condenser vent monitor response of 20 mR/hr. Such a release would result in less than 10 CFR 20 dose rate values at the site boundary and beyond for typical emergency condenser cooldown periods.

Since a 20 mR/hr monitor response can, in theory, be achievable only when reactor water iodines are higher than permitted by Technical Specifications, a conservative monitor setpoint of 5 mr/hr has been adopted.

2.1.5 Discussion

2.1.5.1 Stack Effluent Monitoring System Description

The NMP-1 Stack Effluent Monitoring System consisted of two subsystems; the Radioactive Gaseous Effluent Monitoring System (RAGEMS) and the Offgas Effluent Stack Monitoring System (OGESMS). The OGESMS shall be used to monitor station noble gas effluents and collect particulates and iodine samples in compliance with Part 1 requirements.

The RAGEMS was designed to be promptly activated from the Main Control Room for use in high range monitoring during accident situations in compliance with NUREG 0737 criteria. In accordance with a letter dated September 11, 2002 from the NRC to NMPNS, LLC, "Nine Mile Point Nuclear Station Unit 1 – Use of the Offgas Effluent Stack Monitoring System to Meet Regulatory Guide 1.97, Revision 2 and NUREG-0737," OGESMS meets the objective and purpose of NUREG-0737 and RG 1.97. The sample line to RAGEMS will now be used as an additional auxiliary sample point.

2.1.5.2 Stack Sample Flow Path – RAGEMS Auxiliary Sample Point

The effluent sample is obtained inside the stack at elevation 530' using an isokinetic probe with four orifices. The sample line then bends radially out and back into the stack; descends down the stack and out of the stack at approximately elevation 257'; runs horizontally (enclosed in heat tracing) some 270' along the off gas tunnel; and enters Turbine Building 250' and Offgas Building 247'.

2.1.5.3 Stack Sample Flow Path - OGESMS

The OGESMS sample is obtained from the same stack sample probe as the RAGEMS Auxiliary Sample Point. From the exit of the stack at elevation 257', the sample line runs east approximately 20' and then vertically approximately 8' to the OGESMS skid. In the OGESMS, sample flows thru a particulate/iodine cartridge housing and four noble gas scintillation detectors (i.e., 07 and 08 low range beta detectors and RN-03A and RN-03B high range gamma detectors). From OGESMS, the stack sample flows back into the stack at approximately elevation 257'.

All OGESMS detector outputs are monitored and recorded remotely in the Main Control Room. Alarming capabilities are provided to alert Operators of high release rate conditions prior to exceeding Part I Control DLCO 3.6.15.b (1)(a) whole body dose rate limits.

Stack particulate and iodine samples are retrieved manually from the OGESMS and analyzed in the laboratory using gamma spectroscopy at frequencies and LLDs specified in Part I Table D 4.6.15-2.

2.1.5.4 Sampling Frequency/Sample Analysis

Radioactive gaseous wastes shall be sampled and analyzed in accordance with the sampling and analysis program specified in Part I Table D 4.6.15-2. Noble gas sample and analysis frequencies are increased during elevated release rate conditions. Noble gas sample and analysis are also performed following startup, shutdown and in conjunction with each drywell purge. Particulate samples are saved and analyzed for principal gamma emitters, gross alpha, Fe-55, Sr-89, Sr-90 at monthly intervals minimally, and in response to an increase in noble gas release rate. The latter three analyses are performed off-site from a composite sample.

Consistent with Part I Table D 4.6.15-2, stack effluent tritium is sampled monthly, during each drywell purge, and weekly when fuel is off loaded until stable release rates are demonstrated. Samples are analyzed off-site.

Line loss correction factors are applied to all particulate and iodine results. Correction factors of 2.0 and 1.5 are used for data obtained from RAGEMS Auxiliary Sample Point and OGESMS respectively. These correction factors are based on empirical data from sampling conducted at NMP-1 in 1985 (memo from J. Blasiak to RAGEMS File, 1/6/86, "Stack Sample Representativeness Study: RAGEMS versus In-Stack Auxiliary Probe Samples").

2.1.5.5 I-133 and I-135 Estimates

Monthly, the stack effluent shall be sampled for iodines over a 24 hour period and the I-135/I-131 and the I-133/I-131 ratios calculated. These ratios shall be used to calculate I-133, I-135 release for longer acquisition samples collected during the month.

2.1.5.5 I-133 and I-135 Estimates (Cont'd)

Additionally, the I-135/I-131 and I-133/I-131 ratios should also be determined after a significant change in the ratio is suspected (eg, plant status changes from prolonged shutdown to power operation or fuel damage has occurred). I-135 will be included in the Radioactive Effluent Release Report in accordance with Regulatory Guide 1.21 but it will not be included when totaling dose rate or dose.

2.1.5.6 Gaseous Radwaste Treatment System Operation

Part I Control DLCO 3.6.16.b requires that the gaseous radwaste treatment system shall be functional and shall be used to reduce radioactive materials in gaseous waste prior to their discharge as necessary to meet the requirements of Part I Control DLCO 3.6.15.b.

To ensure Part I Control DLCO 3.6.15.b limits are not exceeded, and to confirm proper radwaste treatment system operation as applicable, cumulative dose contributions for the current calendar quarter and current calendar year shall be determined monthly in accordance with section 2.2 of this manual. Initial dose calculations shall incorporate the following assumptions with regard to release rates of non-gamma emitting radionuclides subsequently analyzed off-site:

a)	H-3 release rate	$\leq$ 4 µCi/sec
b)	Sr-89 release rate	$\leq$ 4 x Cs-137 release rate
c)	Sr-90 release rate	$\leq$ 0.5 x Cs-137 release rate
d)	Fe-55 release rate	$\leq$ 1 x Co-60 release rate

Assumed release rates represent conservative estimates derived from analysis of historical data from effluent releases and process waste streams (See NMP 34023, C. Ware to J. Blasiak, April 29, 1988, "Dose Estimates for Beta-Emitting Isotopes"). Following receipt of off-site H-3, Sr-89, Sr-90, Fe-55 analysis information, dose estimates shall be revised using actual radionuclide concentrations.

2.2 Dose and Dose Rate Determinations

In accordance with Technical Specifications 6.5.3, "Radioactive Effluent Controls Program, and ODCM Part I Controls DSR 4.6.15.b.(1), DSR 4.6.15.b.(2), and DSR 4.6.15.b.(3) dose and dose rate determinations will be made monthly to determine:

(1) Whole body dose rates and gamma air doses at the maximum X/Q land sector site boundary interface.

(2) Skin dose rates and beta air doses at the maximum X/Q land sector site boundary interface.

(3) The critical organ dose and dose rate at a critical receptor location beyond the site boundary.

Average meteorological data (ie, maximum five year annual average X/Q and D/Q values in the case of elevated releases or 1985 annual average X/Q and D/Q values, in the case of ground level releases) shall be utilized for dose and dose rate calculations. Where average meteorological data is assumed, dose and dose rates due to noble gases at locations beyond the site boundary will be lower than equivalent site boundary dose and dose rates. Therefore, under these conditions, calculations of noble gas dose and dose rates beyond the maximum X/Q land sector site boundary locations can be neglected.

2.2 Dose and Dose Rate Determinations (Cont'd)

The frequency of dose rate calculations will be upgraded when elevated release rate conditions specified in subsequent sections II-2.2.1.1 and II-2.2.1.2 are realized.

In accordance with Technical Specification 6.5.3.g, noble gas dose rate to the whole body and skin will be calculated at the site boundary. In accordance with Technical Specification 6.5.3.h, gamma and beta air doses may be calculated at a point beyond the site boundary.

To demonstrate compliance with Technical Specification 6.5.3, "Radioactive Effluent Controls Program", critical organ doses and dose rates may be conservatively calculated by assuming the existence of a maximum individual. This individual is a composite of the highest dose factor of each age group, for each organ and total body, and each nuclide. It is assumed that all pathways are applicable and the highest X/Q and/or D/Q value for actual pathways as noted in Table 3-1 are in effect. The maximum individual's dose is equal to the same dose that person would receive if they were simultaneously subjected to the highest pathway dose at each critical receptor identified for each pathway. The pathways include grass-(cow and goat)-milk, grass-cow-meat, vegetation, ground plane and inhalation. To comply with Part I requirements the maximum individual dose rate will be calculated at this hypothetical critical residence.

If dose or dose rates calculated, using the assumptions noted above, reach Part I limits, actual pathways will be evaluated, and dose/dose rates may be calculated at separate critical receptor locations and compared with applicable limits.

Emergency condenser vent release contributions to the monthly dose and dose rate determinations will be considered only when the emergency condenser return isolation valves have been opened for reactor cooldown, if Emergency Condenser tube leaks develop with or without the system's return isolation valve opened, or if significant activity is detected in the Emergency Condenser Shell.

Without tube leakage, dose contributions from emergency condenser vent releases are to be determined based on condensate storage tank and emergency condenser shell isotopic distributions.

When releases from the emergency condenser have occurred, dose rate and dose determinations shall be performed using methodology in II-2.2.1 and II-2.2.2. Furthermore, environmental sampling may also be initiated to refine any actual contribution to doses. See Section II-2.4.

2.2.1 Dose Rate

Dose rates will be calculated monthly, at a minimum, or when the Hi-Hi stack monitor alarm setpoint is reached, to demonstrate that dose rates resulting from the release of noble gases, tritium, iodines, and particulates with half lives greater than 8 days are within the limits specified in Technical Specifications Section 6.5.3, "Radioactive Effluent Controls Program". These limits are:

<u>Noble Gases</u>

Whole Body Dose Rate:	500 mrem/yr
Skin Dose Rate:	3000 mrem/yr

<u>Tritium, Iodines and Particulates</u>

Organ Dose Rate: 1500 mrem/yr

2.2.1.1 Noble Gases

The following noble gas dose rate equation includes the contribution from the stack (s) elevated release and the emergency condenser vent (v) ground level release when applicable (See section II-2.2).

For whole body dose rates (mrem/sec):

$$DR_\gamma \text{ (mrem/sec)} = 3.17E\text{-}8 \sum_i [(V_i + (SF)\, K_i\, (X/Q)_s)\, Q_{is} + (SF) K_i\, (X/Q)_v Q_{iv}]$$

For skin dose rates (mrem/sec):

$$DR_{\gamma+\beta}\text{(mrem/sec)} = 3.17E\text{-}8 \sum_i [(L_i (X/Q)_s + 1.11(SF)(B_i + M_i (X/Q)_s))Q_{is} + (L_i + 1.11(SF)M_i)(X/Q)_v Q_{iv}]$$

Where:

DR_γ = whole body gamma dose rate (mrem/sec).

$DR_{\gamma+\beta}$ = skin dose rate from gamma and beta radiation (mrem/sec).

V_i = the constant accounting for the gamma whole body dose rate from stack radiation for an elevated finite plume release for each identified noble gas nuclide, i. Listed on Table 3-2 in mrem/yr per μCi/sec.

K_i = the constant accounting for the gamma whole body dose rate from immersion in the semi-infinite cloud for each identified noble gas nuclide, i. Listed in Table 3-3 in mrem/yr per μCi/m^3 (from Reg. Guide 1.109)

Q_{is}, Q_{iv} = the release rate of isotope i from the stack(s) or emergency condenser vent(v); (μCi/sec)

SF = structural shielding factor.

X/Q = the relative plume concentration (in units of sec/m^3) at the land sector site boundary or beyond. Average meteorological data (Table 3-1) is used. "Elevated" X/Q values are used for stack releases (s = stack); "Ground" X/Q values are used for Emergency Condenser Vent releases (v = vent).

L_i = the constant accounting for the beta skin dose rate from immersion in the semi-infinite cloud for each identified noble gas nuclide, i. Listed in Table 3-3 in mrem/yr per μCi/m^3 (from Reg. Guide 1.109)

B_i = the constant accounting for the gamma air radiation from the elevated Finite plume resulting from stack releases for each identified noble gas nuclide, i. Listed in Table 3-2 in mrad/yr per μCi/sec.

2.2.1.1 Noble Gases (Cont'd)

M_i = the constant accounting for the gamma air dose rate from immersion in the semi-infinite cloud for each identified noble gas nuclide, i. Listed in Table 3-3 in mrad/yr per $\mu Ci/m^3$ (from Reg. Guide 1.109)

See Appendix B for derivation of B_i and V_i.

To ensure that the site noble gas dose rate limits are not exceeded, the following procedural actions are taken if the offsite dose rates from Unit 1 exceed 10% of the limits:

1) Notify Unit 1 SM (Shift Manager) and Supervisor Chemistry.

2) Notify Unit 2 SM and Supervisor Chemistry and request the Unit 2 contribution to offsite dose rate.

3) Notify SM of the James A. Fitzpatrick Nuclear Plant and request the Fitzpatrick contribution to offsite dose rate.

4) Increase the frequency of performing noble gas dose and dose rate calculations, if necessary, to ensure Site (Nine Mile Point Units 1 and 2 and Fitzpatrick) limits are not exceeded.

Additionally, alarm setpoints are set at 90% of the dose rate limit to ensure that site limits are not exceeded. This alarm setpoint is adjusted if the noble gas dose rate from Unit 1 is greater than 10% of the limit.

2.2.1.2 Tritium, Iodines and Particulates

To ensure that the 1500 mrem/year site dose rate limit is not exceeded, offsite dose rates for tritium, iodine and particulates with half lives greater than 8 days shall be calculated monthly and when release rates (Q) exceed 0.34 $\mu Ci/sec$ using the following equation.

$$D_{ak}\ (\text{mrem/sec}) = 3.17E\text{-}8 \sum_j [\sum_i R_{ijak} [W_s Q_{is} + W_v Q_{iv}]]$$

Where:

D_{ak} = Total dose rate to each organ k of an individual in age group a (mrem/sec).

W_j = dispersion parameter either X/Q (sec/m^3) or D/Q ($1/m^2$) depending on pathway and receptor location assumed. Average meteorological data is used (Table 3-1). "Elevated" W_j values are used for stack releases (s = stack); "Ground" W_j values are used for Emergency Condenser Vent releases (v = vent).

Q_i = the release rate of isotope i, from the stack (s) or vent(v); ($\mu Ci/sec$).

2.2.1.2 Tritium, Iodines and Particulates (Cont'd)

R_{ijak} = the dose factor for each isotope i, pathway j, age group a, and organ k (Table 3-4, through 3-22; m^2-mrem/yr per µCi/sec for all pathways except inhalation, mrem/yr per µCi/m^3. The R values contained in Tables 3-4 through 3-22 were calculated using the methodology defined in NUREG-0133 and parameters from Regulatory Guide 1.109, Revision 1; as presented in Appendix C.

3.17E-8 = the inverse of the number of seconds in a year.

The use of the 0.34 µCi/sec release rate threshold to perform Unit 1 dose rate calculations is justified as follows:

(a) The 1500 mrem/yr organ dose rate limit corresponds to a minimum release rate limit of 0.34 µCi/sec calculated using the equation:

$$1500 = (Q, \mu Ci/sec) \times (R_{ij}W_j)_{max}$$

Where:

1500 = site boundary dose rate limit (mrem/year).

$(R_{ij}W_j)_{max}$ = the maximum curie-to-dose conversion factor equal to 4.34E3 mrem-sec/µCi-yr for Sr-90, child bone for the vegetation pathway at the critical residence receptor location beyond the site boundary for an elevated release.

(b) The use of 0.34 µCi/sec release rate threshold and the 4.34E3 mrem-sec/µCi-yr curie-to-dose conversion factor is conservative since curie-to-dose conversion factors for other isotopes likely to be present are significantly lower.

If the organ dose rate exceeds 5% of the annual limit, the following procedural actions will be taken:

1) Notify Unit 1 SM (Shift Manager) and Supervisor Chemistry.

2) Notify Unit 2 SM and Supervisor Chemistry and request the Unit 2 contribution to offsite dose rate.

3) Notify SM of James A. Fitzpatrick Nuclear Plant and request JAF's contribution to offsite dose rate.

4) Increase the frequency of performing dose and dose rate calculations if necessary to ensure site (Nine Mile Point Units 1 and 2 and Fitzpatrick) limits are not exceeded.

2.2.2 Dose

Calculations will be performed monthly at a minimum, to demonstrate that doses resulting from the release of noble gases, tritium, iodines, and particulates with half lives greater than 8 days are within the limits specified in 10 CFR 50, Appendix I. These limits are:

Noble Gases

5 mR gamma/calendar quarter
10 mrad beta/calendar quarter
10 mR gamma/calendar year
20 mrad beta/calendar year

Tritium, Iodines and Particulates

7.5 mrem to any organ/calendar quarter
15 mrem to any organ/calendar year

2.2.2.1 Noble Gas Air Dose

The following Noble Gas air dose equation includes contributions from the stack (s) elevated release and the emergency condenser vent (v) ground level release when applicable (see section II-2.2):

For gamma radiation[1] (mrad):

$$D_\gamma \text{ (mrad)} = 3.17E\text{-}8 \sum_i [(B_i + M_i(X/Q)_s)\, Q_{is} + M_i(X/Q)_v\, Q_{iv}]\, t$$

For beta radiation (mrad):

$$D_\beta \text{ (mrad)} = 3.17E\text{-}8 \sum_i N_i[(X/Q)_s\, Q_{is} + (X/Q)_v\, Q_{iv}]\, t$$

Where:

D_γ = gamma air dose (mrad).
D_β = beta air dose (mrad).

[1] Note that the units for the gamma air dose are in mrad compared to the units for the limits are in mR. The NRC recognizes that 1 mR=1 mrad, for gamma radiation.

B_i = the constant accounting for the gamma air radiation from the elevated finite plume resulting from stack releases for each identified noble gas nuclide, i. Listed in Table 3-2 in mrad/yr per μCi/sec.

N_i = the constant accounting for the beta air dose from immersion in the semi-infinite cloud for each identified noble gas nuclide, i. Listed on Table 3-3 in mrad/yr per μCi/m^3 (from Reg. Guide 1.109).

Q_{is}, Q_{iv} = the release rate of isotope i, from the stack (s) or vent (v); (μCi/sec).

2.2.2.1 Noble Gas Air Dose (Cont'd)

3.17E-8	=	the inverse of the number of seconds in a year.
M_i	=	the constant accounting for the gamma air dose from immersion in the semi-infinite cloud for each identified noble gas nuclide, i. Listed on Table 3-3 in mrad/yr per $\mu Ci/m^3$ (from Reg. Guide 1.109).
t	=	total time during release period, sec.

All other parameters are as defined in section II-2.2.1.1.

2.2.2.2 Tritium, Iodines and Particulates

To ensure that the 15 mrem/yr facility dose limit is not exceeded, offsite doses for tritium, iodines, and particulates with half lives greater than 8 days shall be calculated monthly using the following equation:

$$D_{ak}\,(\text{mrem}) = 3.17E\text{-}8 \sum_j [\sum_i R_{ijak}\,[W_s\,Q_{is} + W_v\,Q_{iv}]\,]\,t$$

Where:

D_{ak}	=	total dose to each organ k of an individual in age group a(mrem).
W_j	=	dispersion parameter either X/Q (sec/m^3) or D/Q ($1/m^2$) depending on pathway and receptor location assumed. Average meteorological data is used (Table 3-1). "Elevated" W_j values are used for stack releases (s = stack); "Ground" W_j values are used for Emergency Condenser Vent releases (v = vent).
Q_{is}, Q_{iv}	=	the release rate of isotope i from stack(s) or vent (v); (μCi/sec).
R_{ijak}	=	the dose factor for each isotope i, pathway j, age group a, and organ k (Tables 3-4 through 3-7, mrem/yr per $\mu Ci/m^3$; Tables 3-8 through 3-22, m^2-mrem/yr per μCi/sec). R values contained in Tables 3-4 through 3-22 were calculated using the methodology defined in NUREG-0133 and parameters from Regulatory Guide 1.109, Revision 1; as presented in Appendix C.
3.17E-8	=	the inverse of the number of seconds in a year.
t	=	total time during the release period, sec.

2.2.2.3 Accumulating Doses

Doses will be calculated monthly, at a minimum, for gamma air, beta air, and the critical organ for each age group. Dose estimates will, also, be calculated monthly prior to receipt of any offsite or onsite analysis data i.e., strontium, tritium, and iron-55. Results will be summed for each calendar quarter and year.

The critical doses are based on the following:

- noble gas plume air dose
- direct radiation from ground plane deposition
- inhalation dose
- cow milk ingestion dose
- goat milk ingestion dose
- cow meat ingestion dose
- vegetation (food crops) ingestion dose

The quarterly and annual results shall be compared to the limits listed in paragraph II-2.2.2. If the limits are exceeded, special reports, as required by Part I Section D 6.9.3 shall be submitted.

2.2.3 Dose Projections – Determination of Need to Operate Gaseous Radwaste Treatment System and Ventilation Exhaust Treatment System

2.2.3.1 Requirement

DLCO 3.6.16.b requires that the Gaseous Radwaste Treatment System be used to reduce the radioactive materials in gaseous waste prior to their discharge as necessary to meet the requirements of DLCO 3.6.15. DLCO 3.6.16.b(2) requires that the Ventilation Exhaust Treatment System be used to reduce releases of radioactivity when the projected doses in 31 days would exceed 0.3mrem to any organ. These Controls implement Technical Specification 6.5.3.f that requires the Radioactive Effluent Control Program to include limitations on the functional capability and use of the gaseous effluent treatment systems (Gaseous Radwaste Treatment System AND Ventilation Exhaust Treatment System) to ensure the appropriate portions of these systems are used to reduce releases of radioactivity. The Gaseous Radwaste Treatment System is expected to be in service. For the Ventilation Exhaust Treatment System, use is required when the projected doses in a period of 31 days would exceed 2% of the guidelines for the annual dose or dose commitment, conforming to 10CFR50, Appendix I, i.e., 3 mrem to any organ. When Treatment systems are not in use, doses are to be projected every 31 days.

The appropriate components, which affect iodine or particulate release, to be in use are:

<u>Rad Waste Building</u>
FLT-204-24
FLT-204-25
FLT-204-69
FLT-204-70

<u>RSSB</u>
FLT-204-147

2.2.3.2 Methodology

Due to system design and operating procedures the charcoal beds are always operated when the offgas system is in operation. Therefore, dose projection is not relevant to determining need to operate.

If the Gaseous Radwaste Treatment System becomes nonfunctional for more than seven days a Special Report to the NRC is required. This report will include appropriate dose assessments (cumulative and projected).

If Ventilation Exhaust Treatment System components become nonfunctional which prevent building effluent from being filtered, dose projections will be performed monthly using the methodology of Section II-2.2.2.2. Assumptions for released activity will be added to historical routine stack emissions for calculating dose during the anticipated period of component unavailability. The calculated projected doses for iodine and particulates will be compared to the DLCO 3.6.15.b limits and Technical Specifications Section 6.5.3.f limit, 0.3 mrem to any organ.

2.3 Critical Receptors

In accordance with the provisions of 10 CFR 20 and 10 CFR 50, Appendix I, the critical receptors have been identified and are contained in Table 3-1.

For elevated noble gas releases the critical receptor is the site boundary.

When 1985 average annual X/Q values are used for ground level noble gas releases, the critical receptor is the maximum X/Q land sector site boundary interface.

For tritium, iodines, and particulates with half lives greater than eight days, the critical pathways are grass-(cow and goat)-milk, grass-cow meat, vegetation, inhalation and direct radiation (ground plane) as a result of ground deposition.

The grass-(cow and goat)-milk, and grass-cow-meat pathways will be based on the greatest D/Q location. This location has been determined in conjunction with the land use census (Part I Control DLCO 3.6.22) and is subject to change. The vegetation (food crop) pathway is based on the greatest D/Q garden location from which samples are taken. This location may also be modified as a result of vegetation sampling surveys.

The inhalation and ground plane dose pathways will be calculated at the critical residence.

Because Part I states to calculate "at the site boundary or beyond", the doses and/or dose rates must be calculated for a maximum individual who is exposed to applicable pathways at the critical residence. The maximum individual is a composite of the highest dose factor of each age group, for each organ and total body, and each nuclide.

2.4 Refinement of Offsite Doses Resulting from Emergency Condenser Vent Releases

The doses resulting from the operation of the emergency condensers and calculated in accordance with II-2.2.2 may be refined using data from actual environmental samples. Ground deposition samples will be obtained from an area or areas of maximum projected deposition. These areas are anticipated to be at or near the site boundary and near projected plume centerline. Using the methodology found in Regulatory Guide 1.109, the dose will be calculated to the maximum exposed individual. This dose will then be compared to the dose calculated in accordance with II-2.2.2. The comparison will result in an adjustment factor of less than or greater than one which will be used to adjust the other doses from other pathways. Other environmental samples may also be collected and the resultant calculated doses to the maximum exposed individual compared to the dose calculated per II-2.2.2. Other environmental sample media may include milk, vegetation (such as garden broadleaf vegetables), etc. The adjustment factors from these pathways may be applied to the doses calculated per II-2.2.2 on a pathway by pathway basis or several pathway adjustment factors may be averaged and used to adjust calculated doses.

Doses calculated from actual environmental sample media will be based on the methodology presented in Regulatory Guide 1.109. The regulatory guide equations may be slightly modified to account for short intervals of time (less than one year) or modified for simplicity purposes by deleting decay factors. Deletion of decay factors would yield more conservative results.

3.0 40 CFR 190 REQUIREMENTS

The "Uranium Fuel Cycle" is defined in 40 CFR Part 190.02 (b) as follows:

"Uranium fuel cycle means the operations of milling of uranium ore, chemical conversion of uranium, isotopic enrichment of uranium, fabrication of uranium fuel, generation of electricity by a light-water-cooled nuclear power plant using uranium fuel, and reprocessing of spent uranium fuel, to the extent that these directly support the production of electrical power for public use utilizing nuclear energy, but excludes mining operations, operations at waste disposal sites, transportation of any radioactive material in support of these operations, and the reuse of recovered non-uranium special nuclear and by-product materials from the cycle."

Control DLCO 3.6.15.d of Part I requires that when the calculated doses associated with the effluent releases exceed twice the applicable quarter or annual limits, the licensee shall evaluate the calendar year doses and, if required, submit a Special Report to the NRC and limit subsequent releases such that the dose commitment to a real individual from all uranium fuel cycle sources is limited to 25 mrem to the total body or any organ (except the thyroid, which is limited to 75 mrem). This report is to demonstrate that radiation exposures to all real individuals from all uranium fuel cycle sources (including all liquid and gaseous effluent pathways and direct radiation) are less than the limits in 40 CFR Part 190. If releases that result in doses exceeding the 40 CFR 190 limits have occurred, then a variance from the NRC to permit such releases will be requested and if possible, action will be taken to reduce subsequent releases.

The report to the NRC shall contain:

1) Identification of all uranium fuel cycle facilities or operations within 5 miles of the nuclear power reactor units at the site that contribute to the annual dose of the maximum exposed member of the public.

2) Identification of the maximum exposed member of the public and a determination of the total annual dose to this person from existing pathways and sources of radioactive effluents and direct radiation.

The total body and organ doses resulting from radioactive material in liquid effluents from Nine Mile Point Unit 1 will be summed with the maximum doses resulting from the releases of noble gases, radioiodines, and particulates for the other calendar quarters (as applicable) and from the calendar quarter in which twice the limit was exceeded. The direct dose components will be determined by either calculation or actual measurement. Actual measurements will utilize environmental TLD dosimetry. Calculated measurements will utilize engineering calculations to determine a projected direct dose component. In the event calculations are used, the methodology will be detailed as required in Part I Section D 6.9.1.e.

The doses from Nine Mile Point Unit 1 (including the on-site ISFSI) will be added to the doses to the maximum exposed individual that are contributed from other uranium fuel cycle operations within 5 miles of the site. Other uranium fuel cycle facilities within 5 miles of the Site include Nine Mile Point Nuclear Station Unit 2 and the James A. Fitzpatrick Nuclear Power Plant (including its on-site ISFSI). Doses from other facilities will be calculated in accordance with each facilities' ODCM.

For the purpose of calculating doses, the results of the Radiological Environmental Monitoring Program may be included for providing more refined estimates of doses to a real maximum exposed individual. Estimated doses, as calculated from station effluents, may be replaced by doses calculated from actual environmental sample results. Reports will include all significant details of the dose determination if radiological sampling and analyses are used to determine if the dose limits of 40CFR190 are exceeded.

3.1 Evaluation of Doses From Liquid Effluents

For the evaluation of doses to real members of the public from liquid effluents, the fish consumption and shoreline sediment ground dose will be considered. Since the doses from other aquatic pathways are insignificant, fish consumption and shoreline sediment are the only two pathways that will be considered. The dose associated with fish consumption may be calculated using effluent data and Regulatory Guide 1.109 methodology or by calculating a dose to man based on actual fish sample analysis data. Because of the nature of the receptor location and the extensive fishing in the area, the critical individual may be a teenager or an adult. The dose associated with shoreline sediment is based on the assumption that the shoreline would be utilized as a recreational area. This dose may be derived from liquid effluent data and Regulatory Guide 1.109 methodology or from actual shoreline sediment sample analysis data.

Equations used to evaluate doses from actual fish and shoreline sediment samples are based on Regulatory Guide 1.109 methodology. Because of the sample medium type and the half-lives of the radionuclides historically observed, the decay corrected portions of the equations are deleted. This does not reduce the conservatism of the calculated doses but increases the simplicity from an evaluation point of view. Table 3-23 presents the parameters used for calculating doses from liquid effluents.

The dose from fish sample media is calculated as:

$$R_{apj} = \sum_i [C_{if} (U)(D_{aipj}) f] (1E+3)$$

Where:

R_{apj} = The total annual dose to organ j, of an individual of age group a, from nuclide i, via fish pathway p, in mrem per year.

C_{if} = The concentration of radionuclide i in fish samples in pCi/gram.

U = The consumption rate of fish in kg/yr.

1E+3 = Grams per kilogram.

3.1 Evaluation of Doses From Liquid Effluents (Cont'd)

(D_{aipj}) = The ingestion dose factor for age group a, nuclide i, fish pathway p, and organ j, (Reg. Guide 1.109, Table E-11) (mrem/pCi).

f = The fractional portion of the year over which the dose is applicable.

The dose from shoreline sediment sample media is calculated as:

$$R_{apj} = \sum_i [C_{is} (U)(4E+4)(0.3)(D_{aipj}) f]$$

Where:

R_{apj} = The total annual dose to organ j, of an individual of age group a, from nuclide i, via the sediment pathway p, in mrem per year.

C_{is} = The concentration of radionuclide i in shoreline sediment in pCi/gram.

U = The usage factor, (hr/yr) (Reg. Guide 1.109).

4E+4 = The product of the assumed density of shoreline sediment (40 kilogram per square meter to a depth of 2.5 cm) times the number of grams per kilogram.

0.3 = The shore width factor for a lake.

D_{aipj} = The dose factor for age group a, nuclide i, sediment pathway s, and organ j. (Reg. Guide 1.109, Table E-6)(mrem/hr per pCi/m^2).

f = The fractional portion of the year over which the dose is applicable.

3.2 Evaluation of Doses From Gaseous Effluents

For the evaluation of doses to real members of the public from gaseous effluents, the pathways contained in section II-2.2.2.3 of the ODCM will be considered. These include the deposition, inhalation cows milk, goats milk, meat, and food products (vegetation). However, any updated field data may be utilized that concerns locations of real individuals, real time meteorological data, location of critical receptors, etc. Data from the most recent census and sample location surveys should be utilized. Doses may also be calculated from actual environmental sample media, as available. Environmental sample media data such as TLD, air sample, milk sample and vegetable (food crop) sample data may be utilized in lieu of effluent calculational data.

Doses to member of the public from the pathways contained in ODCM section II-2.2.2.3 as a result of gaseous effluents will be calculated using the dose factors of Regulatory Guide 1.109 or the methodology of the ODCM, as applicable. Doses calculated from environmental sample media will be based on the methodologies found in Regulatory Guide 1.109.

3.3 Evaluation of Doses From Direct Radiation

The dose contribution as a result of direct radiation shall be considered when evaluating whether the dose limitations of 40 CFR 190 have been exceeded.

Direct radiation doses as a result of the reactor, turbine and radwaste buildings, the Independent Spent Fuel Storage Installation (ISFSI), and outside radioactive storage tanks (as applicable) may be evaluated by engineering calculations or by evaluating environmental TLD results at critical receptor locations, site boundary or other special interest locations. For the evaluation of direct radiation doses utilizing environmental TLDs, the critical receptor in question, such as the critical residence, etc., will be compared to the control locations. The comparison involves the difference in environmental TLD results between the receptor location and the average control location result.

3.4 Doses to Members of the Public Within the Site Boundary

The Radioactive Effluent Release Report shall include an assessment of the radiation doses from radioactive liquid and gaseous effluents to members of the public due to their activities inside the site boundary as defined by Figure 5.1-1 of the Technical Specifications. A member of the public, as defined in Part I, would be represented by an individual who visits the site's Energy Center for the purpose of observing the educational displays or for picnicking and associated activities.

Fishing is a major recreational activity in the area and on the Site as a result of the salmonoid and trout populations in Lake Ontario. Fishermen have been observed fishing at the shoreline near the Energy Center from April through December in all weather conditions. Thus, fishing is the major activity performed by members of the public within the site boundary. Based on the nature of the fishermen and undocumented observations, it is conservatively assumed that the maximum exposed individual spends an average of 8 hours per week fishing from the shoreline at a location between the Energy Center and the Unit 1 facility. This estimate is considered conservative but not necessarily excessive and accounts for occasions where individuals may fish more on weekends or on a few days in March of the year.

The pathways considered for the evaluation include the inhalation pathway, the ground dose pathway with the resultant whole body and skin dose and the direct radiation dose pathway with the associated whole body dose. The direct radiation dose pathway, in actuality, includes several pathways. These include: the direct radiation gamma dose to an individual from an overhead plume, a gamma submersion plume dose (as applicable), possible direct radiation dose from the facility (including the on-site ISFSI) and a ground plane dose (deposition). Because the location is in close proximity to the site, any beta plume submersion dose is felt to be insignificant.

Other pathways, such as the ingestion pathway, are not applicable since these doses are included under calculations for doses to members of the public outside of the site boundary. In addition, pathways associated with water related recreational activities, other than fishing, are not applicable here. These include swimming, boating and wading which are prohibited at the facility.

3.4 Doses to Members of the Public Within the Site Boundary (Cont'd)

The inhalation pathway is evaluated by identifying the applicable radionuclides (radioiodine, tritium and particulates) in the effluent for the appropriate time period. The radionuclide concentrations are then multiplied by the appropriate X/Q value, inhalation dose factor, air intake rate, and the fractional portion of the year in question. Thus, the inhalation pathway is evaluated using the following equation adapted from Regulatory Guide 1.109. Table 3-23 presents the reference for the parameters used in the following equation.

NOTE: The following equation is adapted from equations C-3 and C-4 of Regulatory Guide 1.109. Since many of the factors are in units of pCi/m^3, m^3/sec., etc., and since the radionuclide decay expressions have been deleted because of the short distance to the receptor location, the equation presented here is not identical to the Regulatory Guide equations.

$$D_{ja} = \sum_i [(C_i)F\,(X/Q)(DFA)_{ija}(BR)_a t]$$

Where:

D_{ja}	=	The maximum dose from all nuclides to the organ j and age group (a) in mrem/yr.
C_i	=	The average concentration in the stack release of nuclide i for the period in pCi/m^3.
F	=	Unit 1 average stack flowrate in m^3/sec.
X/Q	=	The plume dispersion parameter for a location approximately 0.50 miles west of NMP-1; the plume dispersion parameter is 8.9E-06 sec/m^3 (stack) and was obtained from the C.T. Main five year average annual X/Q tables. The stack (elevated) X/Q is conservative when based on 0.50 miles because of the close proximity of the stack and the receptor location.
$(DFA)_{ija}$	=	The dose factor for nuclide i, organ j, and age group a in mrem per pCi (Reg. Guide 1.109, Table E-7).
$(BR)_a$	=	Annual air intake for individuals in age group a in m^3 per year (obtained from Table E-5 of Regulatory Guide 1.109).
t	=	Fractional portion of the year for which radionuclide i was detected and for which a dose is to be calculated (in years).

3.4 Doses to Members of the Public Within the Site Boundary (Cont'd)

The ground dose pathway (deposition) will be evaluated by obtaining at least one soil or shoreline sediment sample in the area where fishing occurs. The dose will then be calculated using the sample results, the time period in question, and the methodology based on Regulatory Guide 1.109 as presented in Section II-3.1. The resultant dose may be adjusted for a background dose by subtracting the applicable off-site control soil or shoreline sediment sample radionuclide activities. In the event it is noted that fishing is not performed from the shoreline, but is instead performed in the water (i.e., the use of waders), then the ground dose pathway (deposition) may not be evaluated.

The direct radiation gamma dose pathway includes any gamma doses from an overhead plume, potential submersion in the plume, possible direct radiation from the facility (including the on-site ISFSI) and ground plane dose (deposition). This general pathway will be evaluated by average environmental TLD readings. At least two environmental TLDs will be utilized at one location in the approximate area where fishing occurs. The TLDs will be placed in the field on approximately the beginning of a calendar quarter and removed on approximately the end of the calendar quarter. For the purposes of this evaluation, TLD data from quarters 2, 3, and 4 will be utilized.

The average TLD readings will be adjusted by the average control TLD readings. This is accomplished by subtracting the average quarterly control TLD value from the average fishing location TLD value. The applicable quarterly control TLD values will be utilized after adjusting for the appropriate time period (as applicable). In the event of loss or theft of the TLDs, results from a TLD or TLDs in a nearby area may be utilized.

4.0 ENVIRONMENTAL MONITORING PROGRAM

4.1 Sampling Stations

The current sampling locations are specified in Table 5-1 and Figures 5.1-1, 5.1-2. The meteorological tower is shown in Figure 5.1-1. The location is shown as TLD location 17. The Radiological Environmental Monitoring Program is a joint effort between the owners and operators of the Nine Mile Point Unit 1 and the James A. FitzPatrick Nuclear Power Plant. Sampling locations are chosen on the basis of historical average dispersion or deposition parameters from both units. The environmental sampling location coordinates shown on Table 5-1 are based on the NMP-2 reactor centerline.

The average dispersion and deposition parameters have been calculated for a 5 year period, 1978 through 1982. These average dispersion or deposition parameters for the site are used to compare results of the annual land use census.

If it is determined that sample locations required by Part I are unavailable or new locations are identified that yield a significantly higher (e.g. 50%) calculated D/Q value, actions will be taken as required by Controls DLCO 3.6.20 and DLCO 3.6.22, and the Radiological Environmental Monitoring program updated accordingly.

4.2 Interlaboratory Comparison Program

Analyses shall be performed on samples containing known quantities of radioactive materials that are supplied as part of a Commission approved or sponsored Interlaboratory Comparison Program, such as the EPA Crosscheck Program. Participation shall be only for those media, e.g., air, milk, water, etc., that are included in the Nine Mile Point Environmental Monitoring Program and for which crosscheck samples are available. An attempt will be made to obtain a QC sample to program sample ratio of 5% or better. The site identification symbol or the actual Quality Control sample results shall be reported in the Annual Radiological Environmental Operating Report so that the Commission staff may evaluate the results.

Specific sample media for which EPA Cross Check Program samples are available include the following:

- gross beta in air particulate filters
- gamma emitters in air particulate filters
- gamma emitters in milk
- gamma emitters in water
- tritium in water
- I-131 in water

4.3 Capabilities for Thermoluninescent Dosimeters Used for Environmental Measurements

Required detection capabilities for thermoluminescent dosimeters used for environmental measurements required by Table D 4.6.20-1, footnote b of Part I are based on ANSI Standard N545, section 4.3. TLDs are defined as phosphors packaged for field use. In regard to the detection capabilities for thermoluminescent dosimeters, only one determination is required to evaluate the above capabilities per type of TLD. Furthermore, the above capabilities may be determined by the vendor who supplies the TLDs. Required detection capabilities are as follows:

4.3.1 Uniformity shall be determined by giving TLDs from the same batch an exposure equal to that resulting from an exposure rate of 10 mR/hr during the field cycle. The responses obtained shall have a relative standard deviation of less than 7.5%. A total of at least 5 TLDs shall be evaluated.

4.3.2 Reproducibility shall be determined by giving TLDs repeated exposures equal to that resulting from an exposure rate of 10 uR/hr during the field cycle. The average of the relative standard deviations of the responses shall be less than 3.0%. A total of at least 4 TLDs shall be evaluated.

4.3.3 Dependence of exposure interpretation on the length of a field cycle shall be examined by placing TLDs for a period equal to at least a field cycle and a period equal to half the same field cycle in an area where the exposure rate is known to be constant. This test shall be conducted under approximate average winter temperatures and approximate average summer temperatures. For these tests, the ratio of the response obtained in the field cycle to twice that obtained for half the field cycle shall not be less than 0.85. At least 6 TLDs shall be evaluated.

4.3.4 Energy dependence shall be evaluated by the response of TLDs to photons for several energies between approximately 30 keV and 3 MeV. The response shall not differ from that obtained with the calibration source by more than 25% for photons with energies greater than 80 keV and shall not be enhanced by more than a factor of two for photons with energies less than 80 keV. A total of at least 8 TLDs shall be evaluated.

4.3.5 The directional dependence of the TLD response shall be determined by comparing the response of the TLD exposed in the routine orientation with respect to the calibration source with the response obtained for different orientations. To accomplish this, the TLD shall be rotated through at least two perpendicular planes. The response averaged over all directions shall not differ from the response obtained in the standard calibration position by more than 10%. A total of at least 4 TLDs shall be evaluated.

4.3.6 Light dependence shall be determined by placing TLDs in the field for a period equal to the field cycle under the four conditions found in ANSI N545, section 4.3.6. The results obtained for the unwrapped TLDs shall not differ from those obtained for the TLDs wrapped in aluminum foil by more than 10%. A total of at least 4 TLDs shall be evaluated for each of the four conditions.

4.3.7 Moisture dependence shall be determined by placing TLDs (that is, the phosphors packaged for field use) for a period equal to the field cycle in an area where the exposure rate is known to be constant. The TLDs shall be exposed under two conditions: (1) packaged in a thin, sealed plastic bag, and (2) packaged in a thin, sealed plastic bag with sufficient water to yield observable moisture throughout the field cycle. The TLD or phosphor, as appropriate, shall be dried before readout. The response of the TLD exposed in the plastic bag containing water shall not differ from that exposed in the regular plastic bag by more than 10%. A total of at least 4 TLDs shall be evaluated for each condition.

4.3.8 Self irradiation shall be determined by placing TLDs for a period equal to the field cycle in an area where the exposure rate is less than 10 uR/hr and the exposure during the field cycle is known. If necessary, corrections shall be applied for the dependence of exposure interpretation on the length of the field cycle (ANSI N545, section 4.3.3). The average exposure inferred from the responses of the TLDs shall not differ from the known exposure by more than an exposure equal to that resulting from an exposure rate of 10 uR/hr during the field cycle. A total of at least 3 TLDs shall be evaluated.

TABLE 1-1

Average Energy Per Disintegration

ISOTOPE	$\bar{E}_\gamma$mev/dis	(Ref)	$E_\beta$mev/dis[4]	(Ref)
Ar-41	1.294	(3)	0.464	(3)
Kr-83m	0.00248	(1)	0.0371	(1)
Kr-85	0.0022	(1)	0.250	(1)
Kr-85m	0.159	(1)	0.253	(1)
Kr-87	0.793	(1)	1.32	(1)
Kr-88	1.95	(1)	0.377	(1)
Kr-89	2.22	(2)	1.37	(2)
Kr-90	2.10	(2)	1.01	(2)
Xe-131m	0.0201	(1)	0.143	(1)
Xe-133	0.0454	(1)	0.135	(1)
Xe-133m	0.042	(1)	0.19	(1)
Xe-135	0.247	(1)	0.317	(1)
Xe-135m	0.432	(1)	0.095	(1)
Xe-137	0.194	(1)	1.64	(1)
Xe-138	1.18	(1)	0.611	(1)

(1) ORNL-4923, Radioactive Atoms - Supplement I, M.S. Martin, November 1973.

(2) NEDO-12037, "Summary of Gamma and Beta Emitters and Intensity Data"; M.E. Meek, R.S. Gilbert, January 1970. (The average energy was computed from the maximum energy using the ICRP II equation, not the 1/3 value assumption used in this reference).

(3) NCRP Report No. 58, "A Handbook of Radioactivity Measurements Procedures"; 1978

(4) The average energy includes conversion electrons.

TABLE 2-1
A_{iat} VALUES - LIQUID*
RADWASTE TANK
INFANT
mrem - ml
hr - µCi

NUCLIDE	BONE	LIVER	T BODY	THYROID	KIDNEY	LUNG	GI-TRACT
H3	--	2.90E-1	2.90E-1	2.90E-1	2.90E-1	2.90E-1	2.90E-1
Cr 51	--	--	1.29E-2	8.39E-3	1.83E-3	1.63E-2	3.75E-1
Cu 64	--	1.13E-1	5.23E-2	--	1.91E-1	--	2.32
Mn 54	--	1.87E+1	4.23	--	4.14	--	6.86
Fe 55	1.31E+1	8.44	2.26	--	--	4.13	1.07
Fe 59	2.84E+1	4.96E+1	1.96E+1	--	--	1.47E+1	2.37E+1
Co 58	--	3.34	8.34	--	--	--	8.33
Co 60	--	1.02E+1	2.40E+1	--	--	--	2.42E+1
Zn 65	1.72E+1	5.91E+1	2.73E+1	--	2.87E+1	--	5.00E+1
Sr 89	2.32E+3	--	6.66E+1	--	--	--	4.77E+1
Sr 90	1.74E+4	--	4.43E+3	--	--	--	2.17E+2
Zr 95	1.91E-1	4.66E-2	3.30E-2	--	5.02E-2	--	2.32E+1
Mn 56	--	2.40E-4	4.15E-5	--	2.07E-4	--	2.18E-2
Mo 99	--	2.34E+1	4.57	--	3.50E+1	--	7.71
Na 24	2.37	2.37	2.37	2.37	2.37	2.37	2.37
I 131	3.03E+1	3.57E+1	1.57E+1	1.17E+4	4.17E+1	--	1.28
I 133	4.22	6.15	1.80	1.12E+3	7.23	--	1.04
Ni 65	1.33E-3	1.51E-4	6.85E-5	--	--	--	1.15E-2
I 132	1.58E-4	3.21E-4	1.14E-4	1.50E-2	3.58E-4	--	2.60E-4
Cs 134	3.54E+2	6.60E+2	6.67E+1	--	1.70E+2	6.97E+1	1.79
Cs 136	4.05E+1	1.19E+2	4.45E+1	--	4.75E+1	9.71E+1	1.81
Cs 137	4.91E+2	5.75E+2	4.07E+1	--	1.54E+2	6.24E+1	1.80
Ba 140	1.50E+2	1.50E-1	7.74	--	3.57E-2	9.23E-2	3.69E+1
Ce 141	7.21E-2	4.40E-2	5.17E-3	--	1.36E-2	--	2.27E+1
Nb 95	3.85E-2	1.59E-2	9.18E-3	--	1.14E-2	--	1.34E+1
La 140	1.18E-2	4.67E-3	1.20E-3	--	--	--	5.48E+1
Ce 144	2.79	1.14	1.57E-1	--	4.62E-1	--	1.60E+2

* Calculated in accordance with NUREG 0133, Section 4.3.1; and Regulatory Guide 1.109, Regulatory position C, Section 1.

TABLE 2-2
A_{iat} VALUES - LIQUID*
RADWASTE TANK
CHILD
mrem - ml
hr - µCi

NUCLIDE	BONE	LIVER	T BODY	THYROID	KIDNEY	LUNG	GI-TRACT
H3	--	4.39E-1	4.39E-1	4.39E-1	4.39E-1	4.39E-1	4.39E-1
Cr 51	2.13E-2	2.13E-2	1.40	7.86E-1	2.30E-1	1.42	7.31E+1
Cu 64	2.51E-6	2.70	1.63	2.51E-6	6.52	2.51E-6	1.27E+2
Mn 54	6.92	3.38E+3	9.06E+2	6.92	9.53E+2	6.92	2.84E+3
Fe 55	9.21E+2	4.88E+2	1.51E+2	--	--	2.76E+2	9.05E+1
Fe 59	1.30E+3	2.11E+3	1.05E+3	1.34	1.34	6.12E+2	2.19E+3
Co 58	1.89	7.46E+1	2.24E+2	1.89	1.89	1.89	4.26E+2
Co 60	1.12E+2	3.28E+2	7.48E+2	1.12E+2	1.12E+2	1.12E+2	1.31E+3
Zn 65	2.15E+4	5.73E+4	3.56E+4	3.85	3.61E+4	3.85	1.01E+4
Sr 89	3.26E+4	1.10E-4	9.32E+2	1.10E-4	1.10E-4	1.10E-4	1.26E+3
Sr 90	4.26E+5	--	1.08E+5	--	--	--	5.74E+3
Zr 95	1.70	1.33	1.32	1.23	1.38	1.23	1.08E+2
Mn 56	--	1.65E-1	3.73E-2	--	2.00E-1	--	2.39E+1
Mo 99	5.35E-3	9.57E+1	2.37E+1	5.35E-3	2.04E+2	5.35E-3	7.91E+1
Na 24	1.52E+2	1.52E+2	1.52E+2	1.52E+2	1.52E+2	1.52E+2	1.52E+2
I 131	2.09E+2	2.10E+2	1.19E+2	6.94E+4	3.45E+2	5.60E-2	1.87E+1
I 133	3.39E+1	4.19E+1	1.59E+1	7.78E+3	6.98E+1	1.38E-4	1.69E+1
Ni 65	2.67E-1	2.51E-2	1.47E-2	--	--	--	3.08
I 132	6.13E-3	1.13E-2	5.18E-3	5.22E-1	1.72E-2	--	1.32E-2
Cs 134	3.68E+5	6.04E+5	1.27E+5	3.54E+1	1.87E+5	6.72E+4	3.29E+3
Cs 136	3.52E+4	9.67E+4	6.26E+4	6.21E-1	5.15E+4	7.68E+3	3.40E+3
Cs 137	5.15E+5	4.93E+5	7.28E+4	5.37E+1	1.61E+5	5.78E+4	3.14E+3
Ba 140	3.61E+2	3.96E-1	2.11E+1	7.96E-2	1.82E-1	2.68E-1	1.83E+2
Ce 141	1.50E-1	1.07E-1	6.99E-2	6.34E-2	8.24E-2	6.34E-2	5.40E+1
Nb 95	5.21E+2	2.03E+2	1.45E+2	6.39E-1	1.91E+2	6.39E-1	3.75E+5
La 140	1.50E-1	5.93E-2	2.68E-2	1.03E-2	1.03E-2	1.03E-2	1.36E+3
Ce 144	5.00	1.81	6.06E-1	3.58E-1	1.16	3.58E-1	3.80E+2

* Calculated in accordance with NUREG 0133, Section 4.3.1; and Regulatory Guide 1.109, Regulatory position C, Section 1.

TABLE 2-3
A_{iat} VALUES - LIQUID*
RADWASTE TANK
TEEN
mrem - ml
hr - μCi

NUCLIDE	BONE	LIVER	T BODY	THYROID	KIDNEY	LUNG	GI-TRACT
H3	--	3.28E-1	3.28E-1	3.28E-1	3.28E-1	3.28E-1	3.28E-1
Cr 51	1.02E-1	1.02E-1	1.39	8.16E-1	3.84E-1	1.94	2.16E+2
Cu 64	1.20E-5	2.89	1.36	1.20E-5	7.32	1.20E-5	2.24E+2
Mn 54	3.31E+1	4.34E+3	8.87E+2	3.31E+1	1.32E+3	3.31E+1	8.86E+3
Fe 55	6.94E+2	4.92E+2	1.15E+2	--	--	3.12E+2	2.13E+2
Fe 59	1.07E+3	2.49E+3	9.64E+2	6.41	6.41	7.89E+2	5.87E+3
Co 58	9.03	9.82E+1	2.15E+2	9.03	9.03	9.03	1.24E+3
Co 60	5.36E+2	7.96E+2	1.12E+3	5.36E+2	5.36E+2	5.36E+2	3.93E+3
Zn 65	2.10E+4	7.28E+4	3.40E+4	1.84E+1	4.66E+4	1.84E+1	3.08E+4
Sr 89	2.44E+4	5.24E-4	6.98E+2	5.24E-4	5.24E-4	5.24E-4	2.90E+3
Sr 90	4.66E+5	--	1.15E+5	--	--	--	1.31E+4
Zr 95	6.20	6.00	5.97	5.90	6.04	5.90	2.28E+2
Mn 56	--	1.81E-1	3.22E-2	--	2.29E-1	--	1.19E+1
Mo 99	2.56E-2	9.22E+1	1.76E+1	2.56E-2	2.11E+2	2.56E-2	1.65E+2
Na 24	1.39E+2	1.39E+2	1.39E+2	1.39E+2	1.39E+2	1.39E+2	1.39E+2
I 131	1.55E+2	2.17E+2	1.16E+2	6.31E+4	3.73E+2	2.68E-1	4.30E+1
I 133	2.53E+1	4.29E+1	1.31E+1	5.99E+3	7.52E+1	6.60E-4	3.25E+1
Ni 65	2.08E-1	2.66E-2	1.21E-2	--	--	--	1.44
I 132	4.90E-2	1.28E-2	4.60E-3	4.32E-1	2.02E-2	--	5.59E-3
Cs 134	3.05E+5	7.18E+5	3.33E+5	1.69E+2	2.28E+5	8.73E+4	9.10E+3
Cs 136	2.98E+4	1.17E+5	7.88E+4	2.97	6.38E+4	1.01E+4	9.44E+3
Cs 137	4.09E+5	5.44E+5	1.90E+5	2.57E+2	1.85E+5	7.21E+4	7.99E+3
Ba 140	2.35E+2	4.10E-1	1.55E+1	3.81E-1	4.79E-1	5.75E-1	3.63E+2
Ce 141	3.46E-1	3.32E-1	3.07E-1	3.04E-1	3.17E-1	3.04E-1	8.16E+1
Nb 95	4.44E+2	2.48E+2	1.18E+2	3.06	2.40E+2	3.06	1.05E+6
La 140	1.57E-1	1.02E-1	6.35E-2	4.94E-2	4.94E-2	4.94E-2	3.05E+3
Ce 144	3.99	2.65	1.83	1.71	2.27	1.71	5.74E+2

* Calculated in accordance with NUREG 0133, Section 4.3.1; and Regulatory Guide 1.109, Regulatory position C, Section 1.

TABLE 2-4
A_{iat} VALUES - LIQUID*
RADWASTE TANK
ADULT
mrem - ml
hr - µCi

NUCLIDE	BONE	LIVER	T BODY	THYROID	KIDNEY	LUNG	GI-TRACT
H3	--	4.45E-1	4.45E-1	4.45E-1	4.45E-1	4.45E-1	4.45E-1
Cr 51	1.82E-2	1.82E-2	1.27	7.64E-1	2.93E-1	1.67	3.14E+2
Cu 64	--	2.75	1.29	--	6.94	--	2.35E+2
Mn 54	5.94	4.38E+3	8.41E+2	5.94	1.31E+3	5.94	1.34E+4
Fe 55	6.64E+2	4.58E+2	1.07E+2	--	--	2.56E+2	2.63E+2
Fe 59	1.03E+3	2.43E+3	9.31E+2	1.15	1.15	6.79E+2	8.09E+3
Co 58	1.62	9.15E+1	2.03E+2	1.62	1.62	1.62	1.82E+3
Co 60	9.60E+1	3.57E+2	6.71E+2	9.60E+1	9.60E+1	9.60E+1	4.99E+3
Zn 65	2.31E+4	7.36E+4	3.32E+4	3.30	4.92E+4	3.30	4.63E+4
Sr 89	2.25E+4	9.39E-5	6.45E+2	9.39E-5	9.39E-5	9.39E-5	3.60E+3
Sr 90	5.60E+5	--	1.37E+5	--	--	--	1.62E+4
Zr 95	1.36	1.15	1.12	1.06	1.21	1.06	3.06E+2
Mn 56	--	1.73E-1	3.07E-2	--	2.20E-1	--	5.52
Mo 99	4.58E-3	8.70E+1	1.66E+1	4.58E-3	1.97E+2	4.58E-3	2.02E+2
Na 24	1.35E+2	1.35E+2	1.35E+2	1.35E+2	1.35E+2	1.35E+2	1.35E+2
I 131	1.45E+2	2.07E+2	1.19E+2	6.79E+4	3.55E+2	4.80E-2	5.47E+1
I 133	2.35E+1	4.09E+1	1.25E+1	6.02E+3	7.14E+1	1.18E-4	3.68E+1
Ni 65	1.93E-1	2.51E-2	1.14E-2	--	--	--	6.36E-1
I 132	4.68E-3	1.25E-2	4.38E-3	4.38E-1	2.00E-2	--	2.35E-3
Cs 134	2.98E+5	7.08E+5	5.79E+5	3.03E+1	2.29E+5	7.61E+4	1.24E+4
Cs 136	2.96E+4	1.17E+5	8.42E+4	5.32E-1	6.51E+4	8.93E+3	1.33E+4
Cs 137	3.82E+5	5.22E+5	3.42E+5	4.60E+1	1.77E+5	5.90E+4	1.02E+4
Ba 140	2.24E+2	3.49E-1	1.47E+1	6.83E-2	1.64E-1	2.29E-1	4.61E+2
Ce 141	9.53E-2	8.20E-2	5.75E-2	5.44E-2	6.72E-2	5.44E-2	1.06E+2
Nb 95	4.39E+2	2.44E+2	1.32E+2	5.47E-1	2.41E+2	5.47E-1	1.48E+6
La 140	1.11E-1	6.03E-2	2.24E-2	8.84E-3	8.84E-3	8.84E-3	3.78E+3
Ce 144	2.48	1.22	4.24E-1	3.07E-1	8.47E-1	3.07E-1	7.37E+2

* Calculated in accordance with NUREG 0133, Section 4.3.1; and Regulatory Guide 1.109, Regulatory position C, Section 1.

TABLE 2-5
A_{int} VALUES - LIQUID*
EMERGENCY CONDENSER VENT
INFANT
mrem - ml
hr - μCi

NUCLIDE	BONE	LIVER	T BODY	THYROID	KIDNEY	LUNG	GI-TRACT
H3	--	7.43E-4	7.43E-4	7.43E-4	7.43E-4	7.43E-4	7.43E-4
Cr 51	--	--	3.30E-5	2.15E-5	4.70E-6	4.18E-5	9.61E-4
Cu 64	--	2.89E-4	1.34E-4	--	4.89E-4	--	5.94E-3
Mn 54	--	4.79E-2	1.08E-2	--	1.06E-2	--	1.76E-2
Fe 55	3.35E-2	2.16E-2	5.78E-3	--	--	1.06E-2	2.75E-3
Fe 59	7.29E-2	1.27E-1	5.02E-2	--	--	3.76E-2	6.08E-2
Co 58	--	8.58E-3	2.14E-2	--	--	--	2.14E-2
Co 60	--	2.60E-2	6.15E-2	--	--	--	6.19E-2
Zn 65	4.42E-2	1.52E-1	6.99E-2	--	7.35E-2	--	1.28E-1
Sr 89	5.95	--	1.71E-1	--	--	--	1.22E-1
Sr 90	4.46E+1	--	1.14E+1	--	--	--	5.57E-1
Zr 95	4.90E-4	1.19E-4	8.47E-5	--	1.29E-4	--	5.95E-2
Mn 56	--	6.17E-7	1.06E-7	--	5.30E-7	--	5.60E-5
Mo 99	--	6.00E-2	1.17E-2	--	8.97E-2	--	1.98E-2
Na 24	6.07E-3	6.07E-3	6.07E-3	6.07E-3	6.07E-3	6.07E-3	6.07E-3
I 131	7.77E-2	9.16E-2	4.03E-2	3.01E+1	1.07E-1	--	3.27E-3
I 133	1.08E-2	1.58E-2	4.62E-3	2.87	1.85E-2	--	2.67E-3
Ni 65	3.41E-6	3.86E-7	1.76E-7	--	--	--	2.94E-5
I 132	4.05E-7	8.22E-7	2.93E-7	3.85E-5	9.17E-7	--	6.66E-7
Cs 134	9.08E-1	1.69	1.71E-1	--	4.36E-1	1.79E-1	4.60E-3
Cs 136	1.04E-1	3.06E-1	1.14E-1	--	1.22E-1	2.49E-2	4.64E-3
Cs 137	1.26	1.47	1.04E-1	--	3.95E-1	1.60E-1	4.61E-3
Ba 140	3.85E-1	3.85E-4	1.99E-2	--	9.15E-5	2.37E-4	9.47E-2
Ce 141	1.85E-4	1.13E-4	1.33E-5	--	3.48E-5	--	5.82E-2
Nb 95	9.88E-5	4.07E-5	2.35E-5	--	2.92E-5	--	3.43E-2
La 140	3.03E-5	1.20E-5	3.08E-6	--	--	--	1.41E-1
Ce 144	7.16E-3	2.93E-3	4.02E-4	--	1.19E-3	--	4.11E-1

* Calculated in accordance with NUREG 0133, Section 4.3.1; and Regulatory Guide 1.109, Regulatory position C, Section 1.

TABLE 2-6
A_{iat} VALUES - LIQUID*
EMERGENCY CONDENSER VENT
CHILD
mrem - ml
hr - µCi

NUCLIDE	BONE	LIVER	T BODY	THYROID	KIDNEY	LUNG	GI-TRACT
H3	--	1.44E-1	1.44E-1	1.44E-1	1.44E-1	1.44E-1	1.44E-1
Cr 51	3.78E-5	3.78E-5	1.37	7.58E-1	2.07E-1	1.38	7.24E+1
Cu 64	--	2.63	1.59	--	6.35	--	1.23E+2
Mn 54	1.23E-2	3.36E+3	8.95E+2	1.23E-2	9.42E+2	1.23E-2	2.82E+3
Fe 55	9.04E+2	4.79E+2	1.49E+2	--	--	2.71E+2	8.88E+1
Fe 59	1.28E+3	2.07E+3	1.03E+3	2.38E-3	2.38E-3	6.00E+2	2.15E+3
Co 58	3.36E-3	7.01E+1	2.15E+2	3.36E-3	3.36E-3	3.36E-3	4.09E+2
Co 60	1.99E-1	2.08E+2	6.14E+2	1.99E-1	1.99E-1	1.99E-1	1.15E+3
Zn 65	2.15E+4	5.73E+4	3.56E+4	6.84E-3	3.61E+4	6.84E-3	1.01E+4
Sr 89	3.07E+4	--	8.78E+2	--	--	--	1.19E+3
Sr 90	4.01E+5	--	1.02E+5	--	--	--	5.40E+3
Zr 95	3.01E-1	6.78E-2	6.06E-2	2.19E-3	9.61E-2	2.19E-3	6.84E+1
Mn 56	--	1.65E-1	3.73E-2	--	2.00E-1	--	2.39E+1
Mo 99	--	8.16E+1	2.02E+1	--	1.74E+2	--	6.75E+1
Na 24	1.50E+2	1.50E+2	1.50E+2	1.50E+2	1.50E+2	1.50E+2	1.50E+2
I 131	1.86E+2	1.87E+2	1.06E+2	6.19E+4	3.08E+2	--	1.67E+1
I 133	3.08E+1	3.81E+1	1.44E+1	7.07E+3	6.35E+1	--	1.53E+1
Ni 65	2.66E-1	2.50E-2	1.46E-2	--	--	--	3.07
I 132	6.01E-3	1.10E-2	5.08E-3	5.12E-1	1.69E-2	--	1.30E-2
Cs 134	3.68E+5	6.04E+5	1.27E+5	6.29E-2	1.87E+5	6.71E+4	3.25E+3
Cs 136	3.51E+4	9.66E+4	6.25E+4	1.10E-3	5.14E+4	7.67E+3	3.40E+3
Cs 137	5.14E+5	4.92E+5	7.27E+4	9.55E-2	1.60E+5	5.77E+4	3.08E+3
Ba 140	2.48E+2	2.17E-1	1.45E+1	1.42E-4	7.09E-2	1.30E-1	1.26E+2
Ce 141	3.08E-2	1.54E-2	2.39E-3	1.13E-4	6.83E-3	1.13E-4	1.91E+1
Nb 95	5.21E+2	2.03E+2	1.45E+2	1.14E-3	1.90E+2	1.14E-3	3.75E+5
La 140	1.31E-1	4.59E-2	1.55E-2	1.83E-5	1.83E-5	1.83E-5	1.28E+3
Ce 144	1.64	5.15E-1	8.81E-2	6.36E-4	2.85E-1	6.36E-4	1.34E+2

* Calculated in accordance with NUREG 0133, Section 4.3.1; and Regulatory Guide 1.109, Regulatory position C, Section 1.

TABLE 2-7
A_{iat} VALUES - LIQUID*
EMERGENCY CONDENSER VENT
TEEN
mrem - ml
hr - µCi

NUCLIDE	BONE	LIVER	T BODY	THYROID	KIDNEY	LUNG	GI-TRACT
H3	--	1.74E-1	1.74E-1	1.74E-1	1.74E-1	1.74E-1	1.74E-1
Cr 51	1.81E-4	1.81E-4	1.28	7.12E-1	2.81E-1	1.83	2.15E+2
Cu 64	--	2.86	1.35	--	7.24	--	2.22E+2
Mn 54	5.89E-2	4.29E+3	8.52E+2	5.89E-2	1.28E+3	5.89E-2	8.81E+3
Fe 55	6.89E+2	4.88E+2	1.14E+2	--	--	3.10E+2	2.11E+2
Fe 59	1.05E+3	2.46E+3	9.50E+2	1.14E-2	1.14E-2	7.76E+2	5.82E+3
Co 58	1.61E-2	8.78E+1	2.02E+2	1.61E-2	1.61E-2	1.61E-2	1.21E+3
Co 60	9.53E-1	2.57E+2	5.78E+2	9.53E-1	9.53E-1	9.53E-1	3.34E+3
Zn 65	2.10E+4	7.28E+4	3.39E+4	3.28E-2	4.66E+4	3.28E-2	3.08E+4
Sr 89	2.38E+4	--	6.81E+2	--	--	--	2.83E+3
Sr 90	4.54E+5	--	1.12E+5	--	--	--	1.27E+4
Zr 95	2.56E-1	8.80E-2	6.38E-2	1.05E-2	1.24E-1	1.05E-2	1.79E+2
Mn 56	--	1.81E-1	3.22E-2	--	2.29E-1	--	1.19E+1
Mo 99	--	8.57E+1	1.63E+1	--	1.96E+2	--	1.54E+2
Na 24	1.38E+2	1.38E+2	1.38E+2	1.38E+2	1.38E+2	1.38E+2	1.38E+2
I 131	1.47E+2	2.06E+2	1.10E+2	6.00E+4	3.54E+2	4.77E-4	4.07E+1
I 133	2.42E+1	4.11E+1	1.25E+1	5.74E+3	7.21E+1	--	3.11E+1
Ni 65	2.08E-1	2.66E-2	1.21E-2	--	--	--	1.44
I 132	4.86E-3	1.27E-2	4.56E-3	4.29E-1	2.00E-2	--	5.54E-3
Cs 134	3.05E+5	7.18E+5	3.33E+5	3.01E-1	2.28E+5	8.71E+4	8.93E+3
Cs 136	2.98E+4	1.17E+5	7.87E+4	5.28E-3	6.38E+4	1.01E+4	9.43E+3
Cs 137	4.09E+5	5.44E+5	1.89E+5	4.57E-1	1.85E+5	7.19E+4	7.73E+3
Ba 140	1.96E+2	2.47E-2	1.27E+1	6.77E-4	8.23E-2	1.62E-1	3.03E+2
Ce 141	2.43E-2	1.64E-2	2.36E-3	5.40E-4	8.02E-3	5.40E-4	4.54E+1
Nb 95	4.41E+2	2.45E+2	1.15E+2	5.43E-3	2.37E+2	5.43E-3	1.05E+6
La 140	1.05E-1	5.17E-2	1.38E-2	8.78E-5	8.78E-5	8.78E-5	2.96E+3
Ce 144	1.27	5.28E-1	7.12E-2	3.04E-3	3.17E-1	3.04E-3	3.19E+2

* Calculated in accordance with NUREG 0133, Section 4.3.1; and Regulatory Guide 1.109, Regulatory position C, Section 1.

TABLE 2-8
A_{iat} VALUES - LIQUID*
EMERGENCY CONDENSER VENT
ADULT
mrem - ml
hr - µCi

NUCLIDE	BONE	LIVER	T BODY	THYROID	KIDNEY	LUNG	GI-TRACT
H3	--	2.27E-1	2.27E-1	2.27E-1	2.27E-1	2.27E-1	2.27E-1
Cr 51	3.24E-5	3.24E-5	1.24	7.43E-1	2.74E-1	1.65	3.12E+2
Cu 64	--	2.72	1.28	--	6.86	--	2.32E+2
Mn 54	1.06E-2	4.37E+3	8.33E+2	1.06E-2	1.30E+3	1.06E-2	1.34E+4
Fe 55	6.58E+2	4.55E+2	1.06E+2	--	--	2.54E+2	2.61E+2
Fe 59	1.02E+3	2.41E+3	9.22E+2	2.04E-3	2.04E-3	6.72E+2	8.02E+3
Co 58	2.88E-3	8.83E+1	1.98E+2	2.88E-3	2.88E-3	2.88E-3	1.79E+3
Co 60	1.71E-1	2.56E+2	5.65E+2	1.71E-1	1.71E-1	1.71E-1	4.81E+3
Zn 65	2.31E+4	7.36E+4	3.32E+4	5.87E-3	4.92E+4	5.87E-3	4.63E+4
Sr 89	2.18E+4	--	6.27E+2	--	--	--	3.50E+3
Sr 90	5.44E+5	--	1.34E+5	--	--	--	1.57E+4
Zr 95	2.40E-1	7.81E-2	5.35E-2	1.88E-3	1.22E-1	1.88E-3	2.42E+2
Mn 56	--	1.73E-1	3.07E-2	--	2.20E-1	--	5.52
Mo 99	--	8.04E+1	1.53E+1	--	1.82E+2	--	1.86E+2
Na 24	1.34E+2	1.34E+2	1.34E+2	1.34E+2	1.34E+2	1.34E+2	1.34E+2
I 131	1.37E+2	1.96E+2	1.12E+2	6.43E+4	3.36E+2	--	5.17E+1
I 133	2.25E+1	3.91E+1	1.19E+1	5.75E+3	6.82E+1	--	3.51E+1
Ni 65	1.93E-1	2.50E-2	1.14E-2	--	--	--	6.36E-1
I 132	4.64E-3	1.24E-2	4.34E-3	4.34E-1	1.98E-2	--	2.33E-3
Cs 134	2.98E+5	7.08E+5	5.79E+5	5.39E-2	2.29E+5	7.61E+4	1.24E+4
Cs 136	2.96E+4	1.17E+5	8.42E+4	9.46E-4	6.51E+4	8.92E+3	1.33E+4
Cs 137	3.82E+5	5.22E+5	3.42E+5	8.19E-2	1.77E+5	5.89E+4	1.01E+4
Ba 140	1.84E+2	2.32E-1	1.21E+1	1.21E-4	7.88E-2	1.33E-1	3.79E+2
Ce 141	2.21E-2	1.50E-2	1.78E-3	9.67E-5	7.00E-3	9.67E-5	5.68E+1
Nb 95	4.38E+2	2.44E+2	1.31E+2	9.73E-4	2.41E+2	9.73E-4	1.48E+6
La 140	9.90E-2	4.99E-2	1.32E-2	1.57E-5	1.57E-5	1.57E-5	3.66E+3
Ce 144	1.17	4.89E-1	6.33E-2	5.45E-4	2.90E-1	5.45E-4	3.95E+2

* Calculated in accordance with NUREG 0133, Section 4.3.1; and Regulatory Guide 1.109, Regulatory position C, Section 1.

TABLE 3-1
Critical Receptor Dispersion Parameters[a]
For Ground Level and Elevated Releases

LOCATION	DIR	MILES	ELEVATED X/Q (sec/m^3)	ELEVATED D/Q (m^{-2})	GROUND[e] X/Q(sec/m^3)	GROUND[e] D/Q (m^{-2})
Residences	E (98°)	1.4	1.8 E-07[b]	5.2 E-09[b]	4.02 E-07	8.58 E-09
Dairy Cows[f]	SE (130°)	2.6	2.2 E-08[c]	7.0 E-10[c]	6.00 E-08	1.64 E-09
Milk Goats[f]	SE (130°)	2.6	2.2 E-08[c]	7.0 E-10[c]	6.00 E-08	1.64 E-09
Meat Animals	ESE (115°)	1.8	5.1 E-08[c]	1.7 E-09[c]	1.16 E-07	3.54 E-09
Gardens	E (97°)	1.8	1.0 E-07[c]	3.5 E-09[c]	2.53 E-07	5.55 E-09
Site Boundary	ENE (67°)	0.4	2.4 E-06[b,d]	4.4 E-08[c,d]	6.63 E-06	6.35 E-08

a. These values will be used in dose calculations beginning in April 1986 but may be revised periodically to account for changes in locations of farms, gardens or critical residences.

b. Values based on 5 year annual meteorological data (C.T. Main, Rev. 2)

c. Values based on 5 year average grazing season meteorological data (C.T. Main Rev. 2)

d. Values are based on most restrictive X/Q land-based sector (ENE). (C.T. Main, Rev. 2)

e. Values are based on average annual meteorological data for the year 1985.

f. Conservative location based on past dairy cow and goat milk history.

TABLE 3-2

Gamma Air and Whole Body Plume Shine Dose Factors*
For
Noble Gases

Nuclide	Gamma Air B_i mrad/yr / µCi/sec	Gamma Whole Body V_i mrem/yr / µCi/sec
Kr-85	2.23E-6	--
Kr-85m	1.75E-3	1.68E-3
Kr-87	1.02E-2	9.65E-3
Kr-88	2.23E-2	2.17E-2
Kr-89	2.50E-2	1.71E-2
Kr-83m	2.26E-6	--
Xe-133	2.91E-4	1.75E-4
Xe-133m	2.27E-4	1.87E-4
Xe-135	2.62E-3	2.50E-3
Xe-135m	5.20E-3	4.89E-3
Xe-137	2.30E-3	2.20E-3
Xe-138	1.54E-2	1.03E-2
Xe-131m	1.74E-5	1.47E-6
Ar-41	1.64E-2	1.57E-2

* Calculated in accordance with Regulatory Guide 1.109. (See Appendix B.)

TABLE 3-3

IMMERSION DOSE FACTORS FOR NOBLE GASES*

Nuclide	K_i(γ-Body)**	L_i(β-Skin)**	M_i(γ-Air)***	N_i(β-Air)***
Kr 83m	7.56E-02	---	1.93E1	2.88E2
Kr 85m	1.17E3	1.46E3	1.23E3	1.97E3
Kr 85	1.61E1	1.34E3	1.72E1	1.95E3
Kr 87	5.92E3	9.73E3	6.17E3	1.03E4
Kr 88	1.47E4	2.37E3	1.52E4	2.93E3
Kr 89	1.66E4	1.01E4	1.73E4	1.06E4
Kr 90	1.56E4	7.29E3	1.63E4	7.83E3
Xe 131m	9.15E1	4.76E2	1.56E2	1.11E3
Xe 133m	2.51E2	9.94E2	3.27E2	1.48E3
Xe 133	2.94E2	3.06E2	3.53E2	1.05E3
Xe 135m	3.12E3	7.11E2	3.36E3	7.39E2
Xe 135	1.81E3	1.86E3	1.92E3	2.46E3
Xe 137	1.42E3	1.22E4	1.51E3	1.27E4
Xe 138	8.83E3	4.13E3	9.21E3	4.75E3
Ar 41	8.84E3	2.69E3	9.30E3	3.28E3

* From, Table B-1 .Regulatory Guide 1.109 Rev. 1

** mrem/yr per $\mu Ci/m^3$.

*** mrad/yr per $\mu Ci/m^3$.

TABLE 3-4
DOSE AND DOSE RATE
R_i VALUES - INHALATION - INFANT[1]
mrem/yr
$\mu Ci/m^3$

NUCLIDE	BONE	LIVER	T BODY	THYROID	KIDNEY	LUNG	GI-LLI
H 3	--	6.47E2	6.47E2	6.47E2	6.47E2	6.47E2	6.47E2
C 14	2.65E4	5.31E3	5.31E3	5.31E3	5.31E3	5.31E3	5.31E3
Cr 51	--	--	8.95E1	5.75E1	1.32E1	1.28E4	3.57E2
Mn 54	--	2.53E4	4.98E3	--	4.98E3	1.00E6	7.06E3
Fe 55	1.97E4	1.17E4	3.33E3	--	--	8.69E4	1.09E3
Fe 59	1.36E4	2.35E4	9.48E3	--	--	1.02E6	2.48E4
Co 58	--	1.22E3	1.82E3	--	--	7.77E5	1.11E4
Co 60	--	8.02E3	1.18E4	--	--	4.51E6	3.19E4
Zn 65	1.93E4	6.26E4	3.11E4	--	3.25E4	6.47E5	5.14E4
Sr 89	3.98E5	--	1.14E4	--	--	2.03E6	6.40E4
Sr 90	4.09E7	--	2.59E6	--	--	1.12E7	1.31E5
Zr 95	1.15E5	2.79E4	2.03E4	--	3.11E4	1.75E6	2.17E4
Nb 95	1.57E4	6.43E3	3.78E3	--	4.72E3	4.79E5	1.27E4
Mo 99	--	1.65E2	3.23E1	--	2.65E2	1.35E5	4.87E4
I-131	3.79E4	4.44E4	1.96E4	1.48E7	5.18E4	--	1.06E3
I 133	1.32E4	1.92E4	5.60E3	3.56E6	2.24E4	--	2.16E3
Cs 134	3.96E5	7.03E5	7.45E4	--	1.90E5	7.97E4	1.33E3
Cs 137	5.49E5	6.12E5	4.55E4	--	1.72E5	7.13E4	1.33E3
Ba 140	5.60E4	5.60E1	2.90E3	--	1.34E1	1.60E6	3.84E4
La 140	5.05E2	2.00E2	5.15E1	--	--	1.68E5	8.48E4
Ce 141	2.77E4	1.67E4	1.99E3	--	5.25E3	5.17E5	2.16E4
Ce 144	3.19E6	1.21E6	1.76E5	--	5.38E5	9.84E6	1.48E5
Nd 147	7.94E3	8.13E3	5.00E2	--	3.15E3	3.22E5	3.12E4

[1] This and following R_i Tables Calculated in accordance with NUREG 0133, Section 5.3.1, except C 14 values in accordance with Regulatory Guide 1.109 Equation C-8.

TABLE 3-5
DOSE AND DOSE RATE
R_i VALUES - INHALATION - CHILD
mrem/yr
$\mu Ci/m^3$

NUCLIDE	BONE	LIVER	T BODY	THYROID	KIDNEY	LUNG	GI-LLI
H 3	--	1.12E3	1.12E3	1.12E3	1.12E3	1.12E3	1.12E3
C 14	3.59E4	6.73E3	6.73E3	6.73E3	6.73E3	6.73E3	6.73E3
Cr 51	--	--	1.54E2	8.55E1	2.43E1	1.70E4	1.08E3
Mn 54	--	4.29E4	9.51E3	--	1.00E4	1.58E6	2.29E4
Fe 55	4.74E4	2.52E4	7.77E3	--	--	1.11E5	2.87E3
Fe 59	2.07E4	3.34E4	1.67E4	--	--	1.27E6	7.07E4
Co 58	--	1.77E3	3.16E3	--	--	1.11E6	3.44E4
Co 60	--	1.31E4	2.26E4	--	--	7.07E6	9.62E4
Zn 65	4.26E4	1.13E5	7.03E4	--	7.14E4	9.95E5	1.63E4
Sr 89	5.99E5	--	1.72E4	--	--	2.16E6	1.67E5
Sr 90	1.01E8	--	6.44E6	--	--	1.48E7	3.43E5
Zr 95	1.90E5	4.18E4	3.70E4	--	5.96E4	2.23E6	6.11E4
Nb 95	2.35E4	9.18E3	6.55E3	--	8.62E3	6.14E5	3.70E4
Mo 99	--	1.72E2	4.26E1	--	3.92E2	1.35E5	1.27E5
I 131	4.81E4	4.81E4	2.73E4	1.62E7	7.88E4	--	2.84E3
I 133	1.66E4	2.03E4	7.70E3	3.85E6	3.38E4	--	5.48E3
Cs 134	6.51E5	1.01E6	2.25E5	--	3.30E5	1.21E5	3.85E3
Cs 137	9.07E5	8.25E5	1.28E5	--	2.82E5	1.04E5	3.62E3
Ba 140	7.40E4	6.48E1	4.33E3	--	2.11E1	1.74E6	1.02E5
La 140	6.44E2	2.25E2	7.55E1	--	--	1.83E5	2.26E5
Ce 141	3.92E4	1.95E4	2.90E3	--	8.55E3	5.44E5	5.66E4
Ce 144	6.77E6	2.12E6	3.61E5	--	1.17E6	1.20E7	3.89E5
Nd 147	1.08E4	8.73E3	6.81E2	--	4.81E3	3.28E5	8.21E4

TABLE 3-6
DOSE AND DOSE RATE
R_i VALUES - INHALATION - TEEN
mrem/yr
$\mu Ci/m^3$

NUCLIDE	BONE	LIVER	T BODY	THYROID	KIDNEY	LUNG	GI-LLI
H 3	--	1.27E3	1.27E3	1.27E3	1.27E3	1.27E3	1.27E3
C 14	2.60E3	4.87E3	4.87E3	4.87E3	4.87E3	4.87E3	4.87E3
Cr 51	--	--	1.35E2	7.50E1	3.07E1	2.10E4	3.00E3
Mn 54	--	5.11E4	8.40E3	--	1.27E4	1.98E6	6.68E4
Fe 55	3.34E4	2.38E4	5.54E3	--	--	1.24E5	6.39E3
Fe 59	1.59E4	3.70E4	1.43E4	--	--	1.53E6	1.78E5
Co 58	--	2.07E3	2.78E3	--	--	1.34E6	9.52E4
Co 60	--	1.51E4	1.98E4	--	--	8.72E6	2.59E5
Zn 65	3.86E4	1.34E5	6.24E4	--	8.64E4	1.24E6	4.66E4
Sr 89	4.34E5	--	1.25E4	--	--	2.42E6	3.71E5
Sr 90	1.08E8	--	6.68E6	--	--	1.65E7	7.65E5
Zr 95	1.46E5	4.58E4	3.15E4	--	6.74E4	2.69E6	1.49E5
Nb 95	1.86E4	1.03E4	5.66E3	--	1.00E4	7.51E5	9.68E4
Mo 99	--	1.69E2	3.22E1	--	4.11E2	1.54E5	2.69E5
I 131	3.54E4	4.91E4	2.64E4	1.46E7	8.40E4	--	6.49E3
I 133	1.22E4	2.05E4	6.22E3	2.92E6	3.59E4	--	1.03E4
Cs 134	5.02E5	1.13E6	5.49E5	--	3.75E5	1.46E5	9.76E3
Cs 137	6.70E5	8.48E5	3.11E5	--	3.04E5	1.21E5	8.48E3
Ba 140	5.47E4	6.70E1	3.52E3	--	2.28E1	2.03E6	2.29E5
La 140	4.79E2	2.36E2	6.26E1	--	--	2.14E5	4.87E5
Ce 141	2.84E4	1.90E4	2.17E3	--	8.88E3	6.14E5	1.26E5
Ce 144	4.89E6	2.02E6	2.62E5	--	1.21E6	1.34E7	8.64E5
Nd 147	7.86E3	8.56E3	5.13E2	--	5.02E3	3.72E5	1.82E5

TABLE 3-7
DOSE AND DOSE RATE
R_i VALUES - INHALATION - ADULT
mrem/yr
$\mu Ci/m^3$

NUCLIDE	BONE	LIVER	T BODY	THYROID	KIDNEY	LUNG	GI-LLI
H 3	--	1.26E3	1.26E3	1.26E3	1.26E3	1.26E3	1.26E3
C 14	1.82E4	3.41E3	3.41E3	3.41E3	3.41E3	3.41E3	3.41E3
Cr 51	--	--	1.00E2	5.95E1	2.28E1	1.44E4	3.32E3
Mn 54	--	3.96E4	6.30E3	--	9.84E3	1.40E6	7.74E4
Fe 55	2.46E4	1.70E4	3.94E3	--	--	7.21E4	6.03E3
Fe 59	1.18E5	2.78E4	1.06E4	--	--	1.02E6	1.88E5
Co 58	--	1.58E3	2.07E3	--	--	9.28E5	1.06E5
Co 60	--	1.15E4	1.48E4	--	--	5.97E6	2.85E5
Zn 65	3.24E4	1.03E5	4.66E4	--	6.90E4	8.64E5	5.34E4
Sr 89	3.04E5	--	8.72E3	--	--	1.40E6	3.50E5
Sr 90	9.92E7	--	6.10E6	--	--	9.60E6	7.22E5
Zr 95	1.07E5	3.44E4	2.33E4	--	5.42E4	1.77E6	1.50E5
Nb 95	1.41E4	7.82E3	4.21E3	--	7.74E3	5.05E5	1.04E5
Mo 99	--	1.21E2	2.30E1	--	2.91E2	9.12E4	2.48E5
I 131	2.52E4	3.58E4	2.05E4	1.19E7	6.13E4	--	6.28E3
I 133	8.64E3	1.48E4	4.52E3	2.15E6	2.58E4	--	8.88E3
Cs 134	3.73E5	8.48E5	7.28E5	--	2.87E5	9.76E4	1.04E4
Cs 137	4.78E5	6.21E5	4.28E5	--	2.22E5	7.52E4	8.40E3
Ba 140	3.90E4	4.90E1	2.57E3	--	1.67E1	1.27E6	2.18E5
La 140	3.44E2	1.74E2	4.58E1	--	--	1.36E5	4.58E5
Ce 141	1.99E4	1.35E4	1.53E3	--	6.26E3	3.62E5	1.20E5
Ce 144	3.43E6	1.43E6	1.84E5	--	8.48E5	7.78E6	8.16E5
Nd 147	5.27E3	6.10E3	3.65E2	--	3.56E3	2.21E5	1.73E5

TABLE 3-8
DOSE AND DOSE RATE
R_i VALUES - GROUND PLANE
ALL AGE GROUPS
m^2-mrem/yr
µCi/sec

NUCLIDE	TOTAL BODY	SKIN
H 3	--	--
C 14	--	--
Cr 51	4.65E6	5.50E6
Mn 54	1.40E9	1.64E9
Fe 55	--	--
Fe 59	2.73E8	3.20E8
Co 58	3.80E8	4.45E8
Co 60	2.15E10	2.53E10
Zn 65	7.46E8	8.57E8
Sr 89	2.16E4	2.51E4
Sr 90	--	--
Zr 95	2.45E8	2.85E8
Nb 95	1.36E8	1.61E8
Mo 99	3.99E6	4.63E6
I 131	1.72E7	2.09E7
I 133	2.39E6	2.91E6
Cs 134	6.83E9	7.97E9
Cs 137	1.03E10	1.20E10
Ba 140	2.05E7	2.35E7
La 140	1.92E7	2.18E7
Ce 141	1.37E7	1.54E7
Ce 144	6.96E7	8.07E7
Nd 147	8.46E6	1.01E7

TABLE 3-9
DOSE AND DOSE RATE
R_i VALUES - COW MILK - INFANT
$\frac{m^2\text{-mrem/yr}}{\mu Ci/sec}$

NUCLIDE	BONE	LIVER	T BODY	THYROID	KIDNEY	LUNG	GI LLI
H 3*	--	2.38E3	2.38E3	2.38E3	2.38E3	2.38E3	2.38E3
C 14*	3.23E6	6.89E5	6.89E5	6.89E5	6.89E5	6.89E5	6.89E5
Cr 51	--	--	8.35E4	5.45E4	1.19E4	1.06E5	2.43E6
Mn 54	--	2.51E7	5.68E6	--	5.56E6	--	9.21E6
Fe 55	8.43E7	5.44E7	1.45E7	--	--	2.66E7	6.91E6
Fe 59	1.22E8	2.13E8	8.38E7	--	--	6.29E7	1.02E8
Co 58	--	1.39E7	3.46E7	--	--	--	3.46E7
Co 60	--	5.90E7	1.39E8	--	--	--	1.40E8
Zn 65	3.53E9	1.21E10	5.58E9	--	5.87E9	--	1.02E10
Sr 89	6.93E9	--	1.99E8	--	--	--	1.42E8
Sr 90	8.19E10	--	2.09E10	--	--	--	1.02E9
Zr 95	3.85E3	9.39E2	6.66E2	--	1.01E3	--	4.68E5
Nb 95	4.21E5	1.64E5	1.17E5	--	1.54E5	--	3.03E8
Mo 99	--	1.04E8	2.03E7	--	1.55E8	--	3.43E7
I 131	6.81E8	8.02E8	3.53E8	2.64E11	9.37E8	--	2.86E7
I 133	8.52E6	1.24E7	3.63E6	2.26E9	1.46E7	--	2.10E6
Cs 134	2.41E10	4.49E10	4.54E9	--	1.16E10	4.74E9	1.22E8
Cs 137	3.47E10	4.06E10	2.88E9	--	1.09E10	4.41E9	1.27E8
Ba 140	1.21E8	1.21E5	6.22E6	--	2.87E4	7.42E4	2.97E7
La 140	2.03E1	7.99	2.06	--	--	--	9.39E4
Ce 141	2.28E4	1.39E4	1.64E3	--	4.28E3	--	7.18E6
Ce 144	1.49E6	6.10E5	8.34E4	--	2.46E5	--	8.54E7
Nd 147	4.43E2	4.55E2	2.79E1	--	1.76E2	--	2.89E5

*mrem/yr per $\mu Ci/m^3$.

TABLE 3-10
DOSE AND DOSE RATE
R_i VALUES - COW MILK - CHILD
$\frac{m^2\text{-mrem/yr}}{\mu Ci/sec}$

NUCLIDE	BONE	LIVER	T BODY	THYROID	KIDNEY	LUNG	GI-LLI
H 3*	--	1.57E3	1.57E3	1.57E3	1.57E3	1.57E3	1.57E3
C 14*	1.65E6	3.29E5	3.29E5	3.29E5	3.29E5	3.29E5	3.29E5
Cr 51	--	--	5.27E4	2.93E4	7.99E3	5.34E4	2.80E6
Mn 54	--	1.35E7	3.59E6	--	3.78E6	--	1.13E7
Fe 55	6.97E7	3.07E7	1.15E7	--	--	2.09E7	6.85E6
Fe 59	6.52E7	1.06E8	5.26E7	--	--	3.06E7	1.10E8
Co 58	--	6.94E6	2.13E7	--	--	--	4.05E7
Co 60	--	2.89E7	8.52E7	--	--	--	1.60E8
Zn 65	2.63E9	7.00E9	4.35E9	--	4.41E9	--	1.23E9
Sr 89	3.64E9	--	1.04E8	--	--	--	1.41E8
Sr 90	7.53E10	--	1.91E10	--	--	--	1.01E9
Zr 95	2.17E3	4.77E2	4.25E2	--	6.83E2	--	4.98E5
Nb 95	1.86E5	1.03E4	5.69E4	--	1.00E5	--	4.42E8
Mo 99	--	4.07E7	1.01E7	--	8.69E7	--	3.37E7
I 131	3.26E8	3.28E8	1.86E8	1.08E11	5.39E8	--	2.92E7
I 133	4.04E6	4.99E6	1.89E6	9.27E8	8.32E6	--	2.01E6
Cs 134	1.50E10	2.45E10	5.18E9	--	7.61E9	2.73E9	1.32E8
Cs 137	2.17E10	2.08E10	3.07E9	--	6.78E9	2.44E9	1.30E8
Ba 140	5.87E7	5.14E4	3.43E6	--	1.67E4	3.07E4	2.97E7
La 140	9.70	3.39	1.14	--	--	--	9.45E4
Ce 141	1.15E4	5.73E3	8.51E2	--	2.51E3	--	7.15E6
Ce 144	1.04E6	3.26E5	5.55E4	--	1.80E5	--	8.49E7
Nd 147	2.24E2	1.81E2	1.40E1	--	9.94E1	--	2.87E5

*mrem/yr per $\mu Ci/m^3$.

TABLE 3-11
DOSE AND DOSE RATE
R_i VALUES - COW MILK - TEEN
$\frac{m^2\text{-mrem/yr}}{\mu Ci/sec}$

NUCLIDE	BONE	LIVER	T BODY	THYROID	KIDNEY	LUNG	GI-LLI
H 3*	--	9.94E2	9.94E2	9.94E2	9.94E2	9.94E2	9.94E2
C 14*	6.70E5	1.34E5	1.34E5	1.34E5	1.34E5	1.35E5	1.34E5
Cr 51	--	--	2.58E4	1.44E4	5.66E3	3.69E4	4.34E6
Mn 54	--	9.01E6	1.79E6	--	2.69E6	--	1.85E7
Fe 55	2.78E7	1.97E7	4.59E6	--	--	1.25E7	8.52E6
Fe 59	2.81E7	6.57E7	2.54E7	--	--	2.07E7	1.55E8
Co 58	--	4.55E6	1.05E7	--	--	--	6.27E7
Co 60	--	1.86E7	4.19E7	--	--	--	2.42E8
Zn 65	1.34E9	4.65E9	2.17E9	--	2.97E9	--	1.97E9
Sr 89	1.47E9	--	4.21E7	--	--	--	1.75E8
Sr 90	4.45E10	--	1.10E10	--	--	--	1.25E9
Zr 95	9.34E2	2.95E2	2.03E2	--	4.33E2	--	6.80E5
Nb 95	1.86E5	1.03E5	5.69E4	--	1.00E5	--	4.42E8
Mo 99	--	2.24E7	4.27E6	--	5.12E7	--	4.01E7
I 131	1.34E8	1.88E8	1.01E8	5.49E10	3.24E8	--	3.72E7
I 133	1.66E6	2.82E6	8.59E5	3.93E8	4.94E6	--	2.13E6
Cs 134	6.49E9	1.53E10	7.08E9	--	4.85E9	1.85E9	1.90E8
Cs 137	9.02E9	1.20E10	4.18E9	--	4.08E9	1.59E9	1.71E8
Ba 140	2.43E7	2.98E4	1.57E6	--	1.01E4	2.00E4	3.75E7
La 140	4.05	1.99	5.30E-1	--	--	--	1.14E5
Ce 141	4.67E3	3.12E3	3.58E2	--	1.47E3	--	8.91E6
Ce 144	4.22E5	1.74E5	2.27E4	--	1.04E5	--	1.06E8
Nd 147	9.12E1	9.91E1	5.94E0	--	5.82E1	--	3.58E5

*mrem/yr per $\mu Ci/m^3$.

TABLE 3-12
DOSE AND DOSE RATE
R_i VALUES - COW MILK - ADULT
$\frac{m^2\text{-mrem/yr}}{\mu Ci/sec}$

NUCLIDE	BONE	LIVER	T BODY	THYROID	KIDNEY	LUNG	GI-LLI
H 3*	--	7.63E2	7.63E2	7.63E2	7.63E2	7.63E2	7.63E2
C 14*	3.63E5	7.26E4	7.26E4	7.26E4	7.26E4	7.26E4	7.26E4
Cr 51	--	--	1.48E4	8.85E3	3.26E3	1.96E4	3.72E6
Mn 54	--	5.41E6	1.03E6	--	1.61E6	--	1.66E7
Fe 55	1.57E7	1.08E7	2.52E6	--	--	6.04E6	6.21E6
Fe 59	1.61E7	3.79E7	1.45E7	--	--	1.06E7	1.26E8
Co 58	--	2.70E6	6.05E6	--	--	--	5.47E7
Co 60	--	1.10E7	2.42E7	--	--	--	2.06E8
Zn 65	8.71E8	2.77E9	1.25E9	--	1.85E9	--	1.75E9
Sr 89	7.99E8	--	2.29E7	--	--	--	1.28E8
Sr 90	3.15E10	--	7.74E9	--	--	--	9.11E8
Zr 95	5.34E2	1.71E2	1.16E2	--	2.69E2	--	5.43E5
Nb 95	1.09E5	6.07E4	3.27E4	--	6.00E4	--	3.69E8
Mo 99	--	1.24E7	2.36E6	--	2.81E7	--	2.87E7
I 131	7.41E7	1.06E8	6.08E7	3.47E10	1.82E8	--	2.80E7
I 133	9.09E5	1.58E6	4.82E5	2.32E8	2.76E6	--	1.42E6
Cs 134	3.74E9	8.89E9	7.27E9	--	2.88E9	9.55E8	1.56E8
Cs 137	4.97E9	6.80E9	4.46E9	--	2.31E9	7.68E8	1.32E8
Ba 140	1.35E7	1.69E4	8.83E5	--	5.75E3	9.69E3	2.77E7
La 140	2.26	1.14	3.01E-1	--	--	--	8.35E4
Ce 141	2.54E3	1.72E3	1.95E2	--	7.99E2	--	6.58E6
Ce 144	2.29E5	9.58E4	1.23E4	--	5.68E4	--	7.74E7
Nd 147	4.74E1	5.48E1	3.28E0	--	3.20E1	--	2.63E5

*mrem/yr per $\mu Ci/m^3$.

TABLE 3-13
DOSE AND DOSE RATE
R_i VALUES - GOAT MILK - INFANT
m^2-mrem/yr
µCi/sec

NUCLIDE	BONE	LIVER	T BODY	THYROID	KIDNEY	LUNG	GI-LLI
H 3*	--	6.33E3	6.33E3	6.33E3	6.33E3	6.33E3	6.33E3
C 14*	3.23E6	6.89E5	6.89E5	6.89E5	6.89E5	6.89E5	6.89E5
Cr 51	--	--	1.00E4	6.56E3	1.43E3	1.28E4	2.93E5
Mn 54	--	3.01E6	6.82E5	--	6.67E5	--	1.11E6
Fe 55	1.10E6	7.08E5	1.89E5	--	--	3.46E5	8.98E4
Fe 59	1.59E6	2.78E6	1.09E6	--	--	8.21E5	1.33E6
Co 58	--	1.67E6	4.16E6	--	--	--	4.16E6
Co 60	--	7.08E6	1.67E7	--	--	--	1.68E7
Zn 65	4.24E8	1.45E9	6.70E8	--	7.04E8	--	1.23E9
Sr 89	1.48E10	--	4.24E8	--	--	--	3.04E8
Sr 90	1.72E11	--	4.38E10	--	--	--	2.15E9
Zr 95	4.66E2	1.13E2	8.04E1	--	1.22E2	--	5.65E4
Nb 95	9.42E4	3.88E4	2.24E4	--	2.78E4	--	3.27E7
Mo 99	--	1.27E7	2.47E6	--	1.89E7	--	4.17E6
I 131	8.17E8	9.63E8	4.23E8	3.16E11	1.12E9	--	3.44E7
I 133	1.02E7	1.49E7	4.36E6	2.71E9	1.75E7	--	2.52E6
Cs 134	7.23E10	1.35E11	1.36E10	--	3.47E10	1.42E10	3.66E8
Cs 137	1.04E11	1.22E11	8.63E9	--	3.27E10	1.32E10	3.81E8
Ba 140	1.45E7	1.45E4	7.48E5	--	3.44E3	8.91E3	3.56E6
La 140	2.43E0	9.59E-1	2.47E-1	--	--	--	1.13E4
Ce 141	2.74E3	1.67E3	1.96E2	--	5.14E2	--	8.62E5
Ce 144	1.79E5	7.32E4	1.00E4	--	2.96E4	--	1.03E7
Nd 147	5.32E1	5.47E1	3.35E0	--	2.11E1	--	3.46E4

*mrem/yr per µCi/m^3.

TABLE 3-14
DOSE AND DOSE RATE
R_i VALUES - GOAT MILK - CHILD
$\frac{m^2\text{-mrem/yr}}{\mu Ci/sec}$

NUCLIDE	BONE	LIVER	T BODY	THYROID	KIDNEY	LUNG	GI-LLI
H 3*	--	4.17E3	4.17E3	4.17E3	4.17E3	4.17E3	4.17E3
C 14*	1.65E6	3.29E5	3.29E5	3.29E5	3.29E5	3.29E5	3.29E5
Cr 51	--	--	6.34E3	3.52E3	9.62E2	6.43E3	3.36E5
Mn 54	--	1.62E6	4.31E5	--	4.54E5	--	1.36E6
Fe 55	9.06E5	4.81E5	1.49E5	--	--	2.72E5	8.91E4
Fe 59	8.52E5	1.38E6	6.86E5	--	--	3.99E5	1.43E6
Co 58	--	8.35E5	2.56E6	--	--	--	4.87E6
Co 60	--	3.47E6	1.02E7	--	--	--	1.92E7
Zn 65	3.15E8	8.40E8	5.23E8	--	5.29E8	--	1.48E8
Sr 89	7.77E9	--	2.22E8	--	--	--	3.01E8
Sr 90	1.58E11	--	4.01E10	--	--	--	2.13E9
Zr 95	2.62E2	5.76E1	5.13E1	--	8.25E1	--	6.01E4
Nb 95	5.05E4	1.96E4	1.40E4	--	1.85E4	--	3.63E7
Mo 99	--	4.95E6	1.22E6	--	1.06E7	--	4.09E6
I 131	3.91E8	3.94E8	2.24E8	1.30E11	6.46E8	--	3.50E7
I 133	4.84E6	5.99E6	2.27E6	1.11E9	9.98E6	--	2.41E6
Cs 134	4.49E10	7.37E10	1.55E10	--	2.28E10	8.19E9	3.97E8
Cs 137	6.52E10	6.24E10	9.21E9	--	2.03E10	7.32E9	3.91E8
Ba 140	7.05E6	6.18E3	4.12E5	--	2.01E3	3.68E3	3.57E6
La 140	1.16E0	4.07E-1	1.37E-1	--	--	--	1.13E4
Ce 141	1.38E3	6.88E2	1.02E2	--	3.02E2	--	8.59E5
Ce 144	1.25E5	3.91E4	6.66E3	--	2.16E4	--	1.02E7
Nd 147	2.68E1	2.17E1	1.68E0	--	1.19E1	--	3.44E4

*mrem/yr per $\mu Ci/m^3$.

TABLE 3-15
DOSE AND DOSE RATE
R_i VALUES - GOAT MILK - TEEN
m^2-mrem/yr
µCi/sec

NUCLIDE	BONE	LIVER	T BODY	THYROID	KIDNEY	LUNG	GI-LLI
H 3*	--	2.64E3	2.64E3	2.64E3	2.64E3	2.64E3	2.64E3
C 14*	6.70E5	1.34E5	1.34E5	1.34E5	1.34E5	1.35E5	1.34E5
Cr 51	--	--	3.11E3	1.73E3	6.82E2	4.44E3	5.23E5
Mn 54	--	1.08E6	2.15E5	--	3.23E5	--	2.22E6
Fe 55	3.61E5	2.56E5	5.97E4	--	--	1.62E5	1.11E5
Fe 59	3.67E5	8.57E5	3.31E5	--	--	2.70E5	2.03E6
Co 58	--	5.46E5	1.26E6	--	--	--	7.53E6
Co 60	--	2.23E6	5.03E6	--	--	--	2.91E7
Zn 65	1.61E8	5.58E8	2.60E8	--	3.57E8	--	2.36E8
Sr 89	3.14E9	--	8.99E7	--	--	--	3.74E8
Sr 90	9.36E10	--	2.31E10	--	--	--	2.63E9
Zr 95	1.13E2	3.56E1	2.45E1	--	5.23E1	--	8.22E4
Nb 95	2.23E4	1.24E4	6.82E3	--	1.20E4	--	5.30E7
Mo 99	--	2.72E6	5.19E5	--	6.23E6	--	4.87E6
I 131	1.61E8	2.26E8	1.21E8	6.59E10	3.89E8	--	4.47E7
I 133	1.99E6	3.38E6	1.03E6	4.72E8	5.93E6	--	2.56E6
Cs 134	1.95E10	4.58E10	2.13E10	--	1.46E10	5.56E9	5.70E8
Cs 137	2.71E10	3.60E10	1.25E10	--	1.23E10	4.76E9	5.12E8
Ba 140	2.92E6	3.58E3	1.88E5	--	1.21E3	2.41E3	4.50E6
La 140	4.86E-1	2.39E-1	6.36E-2	--	--	--	1.37E4
Ce 141	5.60E2	3.74E2	4.30E1	--	1.76E2	--	1.07E6
Ce 144	5.06E4	2.09E4	2.72E3	--	1.25E4	--	1.27E7
Nd 147	1.09E1	1.19E1	7.13E-1	--	6.99E0	--	4.29E4

*mrem/yr per µCi/m^3.

TABLE 3-16
DOSE AND DOSE RATE
R_i VALUES - GOAT MILK - ADULT
m^2-mrem/yr
µCi/sec

NUCLIDE	BONE	LIVER	T BODY	THYROID	KIDNEY	LUNG	GI-LLI
H 3*	--	2.03E3	2.03E3	2.03E3	2.03E3	2.03E3	2.03E3
C 14*	3.63E5	7.26E4	7.26E4	7.26E4	7.26E4	7.26E4	7.26E4
Cr 51	--	--	1.78E3	1.06E3	3.92E2	2.36E3	4.48E5
Mn 54	--	6.50E5	1.24E5	--	1.93E5	--	1.99E6
Fe 55	2.04E5	1.41E5	3.28E4	--	--	7.85E4	8.07E4
Fe 59	2.10E5	4.95E5	1.90E5	--	--	1.38E5	1.65E6
Co 58	--	3.25E5	7.27E5	--	--	--	6.58E6
Co 60	--	1.32E6	2.91E6	--	--	--	2.48E7
Zn 65	1.05E8	3.33E8	1.51E8	--	2.23E8	--	2.10E8
Sr 89	1.70E9	--	4.89E7	--	--	--	2.73E8
Sr 90	6.62E10	--	1.63E10	--	--	--	1.91E9
Zr 95	6.45E1	2.07E1	1.40E1	--	3.25E1	--	6.56E4
Nb 95	1.31E4	7.29E3	3.92E3	--	7.21E3	--	4.42E7
Mo 99	--	1.51E6	2.87E5	--	3.41E6	--	3.49E6
I 131	8.89E7	1.27E8	7.29E7	4.17E10	2.18E8	--	3.36E7
I 133	1.09E6	1.90E6	5.79E5	2.79E8	3.31E6	--	1.71E6
Cs 134	1.12E10	2.67E10	2.18E10	--	8.63E9	2.86E9	4.67E8
Cs 137	1.49E10	2.04E10	1.34E10	--	6.93E9	2.30E9	3.95E8
Ba 140	1.62E6	2.03E3	1.06E5	--	6.91E2	1.16E3	3.33E6
La 140	2.71E-1	1.36E-1	3.61E-2	--	--	--	1.00E4
Ce 141	3.06E2	2.07E2	2.34E1	--	9.60E1	--	7.90E5
Ce 144	2.75E4	1.15E4	1.48E3	--	6.82E3	--	9.30E6
Nd 147	5.69E0	6.57E0	3.93E-1	--	3.84E0	--	3.15E4

*mrem/yr per µCi/m^3.

TABLE 3-17
DOSE AND DOSE RATE
R_i VALUES - COW MEAT - CHILD
m^2-mrem/yr
µCi/sec

NUCLIDE	BONE	LIVER	T BODY	THYROID	KIDNEY	LUNG	GI-LLI
H 3*	--	2.34E2	2.34E2	2.34E2	2.34E2	2.34E2	2.34E2
C 14*	5.29E5	1.06E5	1.06E5	1.06E5	1.06E5	1.06E5	1.06E5
Cr 51	--	--	4.55E3	2.52E3	6.90E2	4.61E3	2.41E5
Mn 54	--	5.15E6	1.37E6	--	1.44E6	--	4.32E6
Fe 55	2.89E8	1.53E8	4.74E7	--	--	8.66E7	2.84E7
Fe 59	2.04E8	3.30E8	1.65E8	--	--	9.58E7	3.44E8
Co 58	--	9.41E6	2.88E7	--	--	--	5.49E7
Co 60	--	4.64E7	1.37E8	--	--	--	2.57E8
Zn 65	2.38E8	6.35E8	3.95E8	--	4.00E8	--	1.12E8
Sr 89	2.65E8	--	7.57E6	--	--	--	1.03E7
Sr 90	7.01E9	--	1.78E9	--	--	--	9.44E7
Zr 95	1.51E6	3.32E5	2.95E5	--	4.75E5	--	3.46E8
Nb 95	4.10E6	1.59E6	1.14E6	--	1.50E6	--	2.95E9
Mo 99	--	5.42E4	1.34E4	--	1.16E5	--	4.48E4
I 131	4.15E6	4.18E6	2.37E6	1.38E9	6.86E6	--	3.72E5
I 133	9.38E-2	1.16E-1	4.39E-2	2.15E1	1.93E-1	--	4.67E-2
Cs 134	6.09E8	1.00E9	2.11E8	--	3.10E8	1.11E8	5.39E6
Cs 137	8.99E8	8.60E8	1.27E8	--	2.80E8	1.01E8	5.39E6
Ba 140	2.20E7	1.93E4	1.28E6	--	6.27E3	1.15E4	1.11E7
La 140	2.80E-2	9.78E-3	3.30E-3	--	--	--	2.73E2
Ce 141	1.17E4	5.82E3	8.64E2	--	2.55E3	--	7.26E6
Ce 144	1.48E6	4.65E5	7.91E4	--	2.57E5	--	1.21E8
Nd 147	5.93E3	4.80E3	3.72E2	--	2.64E3	--	7.61E6

*mrem/yr per µCi/m^3.

TABLE 3-18
DOSE AND DOSE RATE
R_i VALUES - COW MEAT - TEEN
m^2-mrem/yr
µCi/sec

NUCLIDE	BONE	LIVER	T BODY	THYROID	KIDNEY	LUNG	GI-LLI
H 3*	--	1.94E2	1.94E2	1.94E2	1.94E2	1.94E2	1.94E2
C 14*	2.81E5	5.62E4	5.62E4	5.62E4	5.62E4	5.62E4	5.62E4
Cr 51	--	--	2.93E3	1.62E3	6.39E2	4.16E3	4.90E5
Mn 54	--	4.50E6	8.93E5	--	1.34E6	--	9.24E6
Fe 55	1.50E8	1.07E8	2.49E7	--	--	6.77E7	4.62E7
Fe 59	1.15E8	2.69E8	1.04E8	--	--	8.47E7	6.36E8
Co 58	--	8.05E6	1.86E7	--	--	--	1.11E8
Co 60	--	3.90E7	8.80E7	--	--	--	5.09E8
Zn 65	1.59E8	5.52E8	2.57E8	--	3.53E8	--	2.34E8
Sr 89	1.40E8	--	4.01E6	--	--	--	1.67E7
Sr 90	5.42E9	--	1.34E9	--	--	--	1.52E8
Zr 95	8.50E5	2.68E5	1.84E5	--	3.94E5	--	6.19E8
Nb 95	2.37E6	1.32E6	7.24E5	--	1.28E6	--	5.63E9
Mo 99	--	3.90E4	7.43E3	--	8.92E4	--	6.98E4
I 131	2.24E6	3.13E6	1.68E6	9.15E8	5.40E6	--	6.20E5
I 133	5.05E-2	8.57E-2	2.61E-2	1.20E1	1.50E-1	--	6.48E-2
Cs 134	3.46E8	8.13E8	3.77E8	--	2.58E8	9.87E7	1.01E7
Cs 137	4.88E8	6.49E8	2.26E8	--	2.21E8	8.58E7	9.24E6
Ba 140	1.19E7	1.46E4	7.68E5	--	4.95E3	9.81E3	1.84E7
La 140	1.53E-2	7.51E-3	2.00E-3	--	--	--	4.31E2
Ce 141	6.19E3	4.14E3	4.75E2	--	1.95E3	--	1.18E7
Ce 144	7.87E5	3.26E5	4.23E4	--	1.94E5	--	1.98E8
Nd 147	3.16E3	3.44E3	2.06E2	--	2.02E3	--	1.24E7

*mrem/yr per µCi/m^3.

TABLE 3-19
DOSE AND DOSE RATE
R_i VALUES - COW MEAT - ADULT
m^2-mrem/yr
µCi/sec

NUCLIDE	BONE	LIVER	T BODY	THYROID	KIDNEY	LUNG	GI-LLI
H 3*	--	3.25E2	3.25E2	3.25E2	3.25E2	3.25E2	3.25E2
C 14*	3.33E5	6.66E4	6.66E4	6.66E4	6.66E4	6.66E4	6.66E4
Cr 51	--	--	3.65E3	2.18E3	8.03E2	4.84E3	9.17E5
Mn 54	--	5.90E6	1.13E6	--	1.76E6	--	1.81E7
Fe 55	1.85E8	1.28E8	2.98E7	--	--	7.14E7	7.34E7
Fe 59	1.44E8	3.39E8	1.30E8	--	--	9.46E7	1.13E9
Co 58	--	1.04E7	2.34E7	--	--	--	2.12E8
Co 60	--	5.03E7	1.11E8	--	--	--	9.45E8
Zn 65	2.26E8	7.19E8	3.25E8	--	4.81E8	--	4.53E8
Sr 89	1.66E8	--	4.76E6	--	--	--	2.66E7
Sr 90	8.38E9	--	2.06E9	--	--	--	2.42E8
Zr 95	1.06E6	3.40E5	2.30E5	--	5.34E5	--	1.08E9
Nb 95	3.04E6	1.69E6	9.08E5	--	1.67E6	--	1.03E10
Mo 99	--	4.71E4	8.97E3	--	1.07E5	--	1.09E5
I 131	2.69E6	3.85E6	2.21E6	1.26E9	6.61E6	--	1.02E6
I 133	6.04E-2	1.05E-1	3.20E-2	1.54E1	1.83E-1	--	9.44E-2
Cs 134	4.35E8	1.03E9	8.45E8	--	3.35E8	1.11E8	1.81E7
Cs 137	5.88E8	8.04E8	5.26E8	--	2.73E8	9.07E7	1.56E7
Ba 140	1.44E7	1.81E4	9.44E5	--	6.15E3	1.04E4	2.97E7
La 140	1.86E-2	9.37E-3	2.48E-3	--	--	--	6.88E2
Ce 141	7.38E3	4.99E3	5.66E2	--	2.32E3	--	1.91E7
Ce 144	9.33E5	3.90E5	5.01E4	--	2.31E5	--	3.16E8
Nd 147	3.59E3	4.15E3	2.48E2	--	2.42E3	--	1.99E7

*mrem/yr per µCi/m^3.

TABLE 3-20
DOSE AND DOSE RATE
R_i VALUES - VEGETATION - CHILD
$\frac{m^2\text{-mrem/yr}}{\mu Ci/sec}$

NUCLIDE	BONE	LIVER	T BODY	THYROID	KIDNEY	LUNG	GI-LLI
H 3*	--	4.01E3	4.01E3	4.01E3	4.01E3	4.01E3	4.01E3
C 14*	3.50E6	7.01E5	7.01E5	7.01E5	7.01E5	7.01E5	7.01E5
Cr 51	--	--	1.17E5	6.49E4	1.77E4	1.18E5	6.20E6
Mn 54	--	6.65E8	1.77E8	--	1.86E8	--	5.58E8
Fe 55	7.63E8	4.05E8	1.25E8	--	--	2.29E8	7.50E7
Fe 59	3.97E8	6.42E8	3.20E8	--	--	1.86E8	6.69E8
Co 58	--	6.45E7	1.97E8	--	--	--	3.76E8
Co 60	--	3.78E8	1.12E9	--	--	--	2.10E9
Zn 65	8.12E8	2.16E9	1.35E9	--	1.36E9	--	3.80E8
Sr 89	3.59E10	--	1.03E9	--	--	--	1.39E9
Sr 90	1.24E12	--	3.15E11	--	--	--	1.67E10
Zr 95	3.86E6	8.50E5	7.56E5	--	1.22E6	--	8.86E8
Nb 95	1.02E6	3.99E5	2.85E5	--	3.75E5	--	7.37E8
Mo 99	--	7.70E6	1.91E6	--	1.65E7	--	6.37E6
I 131	7.16E7	7.20E7	4.09E7	2.38E10	1.18E8	--	6.41E6
I 133	1.69E6	2.09E6	7.92E5	3.89E8	3.49E6	--	8.44E5
Cs 134	1.60E10	2.63E10	5.55E9	--	8.15E9	2.93E9	1.42E8
Cs 137	2.39E10	2.29E10	3.38E9	--	7.46E9	2.68E9	1.43E8
Ba 140	2.77E8	2.43E5	1.62E7	--	7.90E4	1.45E5	1.40E8
La 140	3.25E3	1.13E3	3.83E2	--	--	--	3.16E7
Ce 141	6.56E5	3.27E5	4.85E4	--	1.43E5	--	4.08E8
Ce 144	1.27E8	3.98E7	6.78E6	--	2.21E7	--	1.04E10
Nd 147	7.23E4	5.86E4	4.54E3	--	3.22E4	--	9.28E7

*mrem/yr per $\mu Ci/m^3$.

TABLE 3-21
DOSE AND DOSE RATE
R_i VALUES - VEGETATION - TEEN
m^2-mrem/yr
µCi/sec

NUCLIDE	BONE	LIVER	T BODY	THYROID	KIDNEY	LUNG	GI-LLI
H 3*	--	2.59E3	2.59E3	2.59E3	2.59E3	2.59E3	2.59E3
C 14*	1.45E6	2.91E5	2.91E5	2.91E5	2.91E5	2.91E5	2.91E5
Cr 51	--	--	6.16E4	3.42E4	1.35E4	8.79E4	1.03E7
Mn 54	--	4.54E8	9.01E7	--	1.36E8	--	9.32E8
Fe 55	3.10E8	2.20E8	5.13E7	--	--	1.40E8	9.53E7
Fe 59	1.79E8	4.18E8	1.61E8	--	--	1.32E8	9.89E8
Co 58	--	4.37E7	1.01E8	--	--	--	6.02E8
Co 60	--	2.49E8	5.60E8	--	--	--	3.24E9
Zn 65	4.24E8	1.47E9	6.86E8	--	9.41E8	--	6.23E8
Sr 89	1.51E10	--	4.33E8	--	--	--	1.80E9
Sr 90	7.51E11	--	1.85E11	--	--	--	2.11E10
Zr 95	1.72E6	5.44E5	3.74E5	--	7.99E5	--	1.26E9
Nb 95	4.80E5	2.66E5	1.46E5	--	2.58E5	--	1.14E9
Mo 99	--	5.64E6	1.08E6	--	1.29E7	--	1.01E7
I 131	3.85E7	5.39E7	2.89E7	1.57E10	9.28E7	--	1.07E7
I 133	9.29E5	1.58E6	4.80E5	2.20E8	2.76E6	--	1.19E6
Cs 134	7.10E9	1.67E10	7.75E9	--	5.31E9	2.03E9	2.08E8
Cs 137	1.01E10	1.35E10	4.69E9	--	4.59E9	1.78E9	1.92E8
Ba 140	1.38E8	1.69E5	8.91E6	--	5.74E4	1.14E5	2.13E8
La 140	1.81E3	8.88E2	2.36E2	--	--	--	5.10E7
Ce 141	2.83E5	1.89E5	2.17E4	--	8.89E4	--	5.40E8
Ce 144	5.27E7	2.18E7	2.83E6	--	1.30E7	--	1.33E10
Nd 147	3.66E4	3.98E4	2.38E3	--	2.34E4	--	1.44E8

*mrem/yr per µCi/m^3

TABLE 3-22
DOSE AND DOSE RATE
R_i VALUES - VEGETATION - ADULT
m^2-mrem/yr
µCi/sec

NUCLIDE	BONE	LIVER	T. BODY	THYROID	KIDNEY	LUNG	GI-LLI
H 3*	--	2.26E3	2.26E3	2.26E3	2.26E3	2.26E3	2.26E3
C 14*	8.97E5	1.79E5	1.79E5	1.79E5	1.79E5	1.79E5	1.79E5
Cr 51	--	--	4.64E4	2.77E4	1.02E4	6.15E4	1.17E7
Mn 54	--	3.13E8	5.97E7	--	9.31E7	--	9.58E8
Fe 55	2.00E8	1.38E8	3.22E7	--	--	7.69E7	7.91E7
Fe 59	1.26E8	2.96E8	1.13E8	--	--	8.27E7	1.02E9
Co 58	--	3.08E7	6.90E7	--	--	--	6.24E8
Co 60	--	1.67E8	3.69E8	--	--	--	3.14E9
Zn 65	3.17E8	1.01E9	4.56E8	--	6.75E8	--	6.36E8
Sr 89	9.96E9	--	2.86E8	--	--	--	1.60E9
Sr 90	6.05E11	--	1.48E11	--	--	--	1.75E10
Zr 95	1.18E6	3.77E5	2.55E5	--	5.92E5	--	1.20E9
Nb 95	3.55E5	1.98E5	1.06E5	--	1.95E5	--	1.20E9
Mo 99	--	6.14E6	1.17E6	--	1.39E7	--	1.42E7
I 131	4.04E7	5.78E7	3.31E7	1.90E10	9.91E7	--	1.53E7
I 133	1.00E6	1.74E6	5.30E5	2.56E8	3.03E6	--	1.56E6
Cs 134	4.67E9	1.11E10	9.08E9	--	3.59E9	1.19E9	1.94E8
Cs 137	6.36E9	8.70E9	5.70E9	--	2.95E9	9.81E8	1.68E8
Ba 140	1.29E8	1.61E5	8.42E6	--	5.49E4	9.25E4	2.65E8
La 140	1.98E3	9.97E2	2.63E2	--	--	--	7.32E7
Ce 141	1.97E5	1.33E5	1.51E4	--	6.19E4	--	5.09E8
Ce 144	3.29E7	1.38E7	1.77E6	--	8.16E6	--	1.11E10
Nd 147	3.36E4	3.88E4	2.32E3	--	2.27E4	--	1.86E8

*mrem/yr per µCi/m^3

TABLE 3-23
PARAMETERS FOR THE EVALUATION OF DOSES TO REAL MEMBERS OF THE PUBLIC FROM GASEOUS AND LIQUID EFFLUENTS

Pathway	Parameters	Value	Reference
Fish	U (kg/yr) - adult	21	Reg. Guide 1.109 Table E-5
Fish	D_{aipj} (mrem/pCi)	Each Radionuclide	Reg. Guide 1.109 Table E-11
Shoreline	U (hr/yr) - adult - teen	 67 67	 Reg. Guide 1.09 Assumed to be same as Adult
Shoreline	D_{aipj} (mrem/hr per pCi/m^2)	Each Radionuclide	Reg. Guide 1.109 Table E-6
Inhalation	DFA_{ija}	Each Radionuclide	Reg. Guide 1.109 Table E-7

TABLE 5.1
NINE MILE POINT NUCLEAR STATION
RADIOLOGICAL ENVIRONMENTAL MONITORING PROGRAM
SAMPLING LOCATIONS

Type of Sample	★Map Location	Collection Site (Env. Program No.)	Location
Radioiodine and Particulates (air)	1	Nine Mile Point Road North (R-1)	1.8 mi @ 92° E
Radioiodine and Particulates (air)	2	Co. Rt. 29 & Lake Road (R-2)	1.1 mi @ 106° ESE
Radioiodine and Particulates (air)	3	Co. Rt. 29 (R-3)	1.4 mi @ 134° SE
Radioiodine and Particulates (air)	4	Village of Lycoming, NY (R-4)	1.8 mi @ 145° SE
Radioiodine and Particulates (air)	5	Montario Point Road (R-5)	16.2 mi @ 42° NE
Direct Radiation (TLD)	6	North Shoreline Area (75)	0.1 mi @ 354° N
Direct Radiation (TLD)	7	North Shoreline Area (76)	0.1 mi @ 27° NNE
Direct Radiation (TLD)	8	North Shoreline Area (77)	0.2 mi @ 37° NE
Direct Radiation (TLD)	9	North Shoreline Area (23)	0.8 mi @ 74° ENE
Direct Radiation (TLD)	10	JAF East Boundary (78)	1.0 mi @ 86° E
Direct Radiation (TLD)	11	Rt. 29 (79)	1.2 mi @ 121° ESE
Direct Radiation (TLD)	12	Rt. 29 (80)	1.5 mi @ 136° SE
Direct Radiation (TLD)	13	Miner Road (81)	1.7 mi @ 160° SSE
Direct Radiation (TLD)	14	Miner Road (82)	1.6 mi @ 180° S
Direct Radiation (TLD)	15	Lakeview Road (83)	1.2 mi @ 203° SSW
Direct Radiation (TLD)	16	Lakeview Road (84)	1.1 mi @ 225° SW
Direct Radiation (TLD)	17	Site Meteorological Tower (7)	0.7 mi @ 244° WSW
Direct Radiation (TLD)	18	Energy Information Center (18)	0.5 mi @ 266° W

★ Map = See Figures 5.1-1 and 5.1-2

TABLE 5.1
NINE MILE POINT NUCLEAR STATION
RADIOLOGICAL ENVIRONMENTAL MONITORING PROGRAM
SAMPLING LOCATIONS

Type of Sample	★ Map Location	Collection Site (Env. Program No.)	Location
Direct Radiation (TLD)	19	North Shoreline (85)	0.2 mi @ 290° WNW
Direct Radiation (TLD)	20	North Shoreline (86)	0.1 mi @ 310° NW
Direct Radiation (TLD)	21	North Shoreline (87)	0.1 mi @ 332° NNW
Direct Radiation (TLD)	22	Hickory Grove (88)	4.5 mi @ 97° E
Direct Radiation (TLD)	23	Leavitt Road (89)	4.3 mi @ 112° ESE
Direct Radiation (TLD)	24	Rt. 104 (90)	4.2 mi @ 135° SE
Direct Radiation (TLD)	25	Rt. 51A (91)	4.9 mi @ 157° SSE
Direct Radiation (TLD)	26	Maiden Lane Road (92)	4.5 mi @ 183° S
Direct Radiation (TLD)	27	Co. Rt. 53 (93)	4.4 mi @ 206° SSW
Direct Radiation (TLD)	28	Co. Rt. 1 (94)	4.4 mi @ 224° SW
Direct Radiation (TLD)	29	Lake Shoreline (95)	3.7 mi @ 239° WSW
Direct Radiation (TLD)	30	Phoenix, NY Control (49)	19.7 mi @ 168° SSE
Direct Radiation (TLD)	31	S. W. Oswego, Control (14)	12.5 mi @ 227° SW
Direct Radiation (TLD)	32	Scriba, NY (96)	3.7 mi @ 199° SSW
Direct Radiation (TLD)	33	Novelis, Rt. 1A (58)	3.0 mi @ 222° SW
Direct Radiation (TLD)	34	Lycoming, NY (97)	1.8 mi @ 145° SE
Direct Radiation (TLD)	35	New Haven, NY (56)	5.2 mi @ 124° SE
Direct Radiation (TLD)	36	W. Boundary, Bible Camp (15)	0.9 mi @ 239° WSW
Direct Radiation (TLD)	37	Lake Road (98)	1.2 mi @ 103° ESE
Surface Water	38	OSS Inlet Canal (NA)	7.6 mi @ 236° SW
Surface Water	39	JAFNPP Inlet Canal (NA)	0.5 mi @ 71° ENE

(NA) = Not applicable
★ Map = See Figures 5.1-1 and 5.1-2

TABLE 5.1 (Cont'd)
NINE MILE POINT NUCLEAR STATION
RADIOLOGICAL ENVIRONMENTAL MONITORING PROGRAM
SAMPLING LOCATIONS

Type of Sample	★ Map Location	Collection Site (Env. Program No.)	Location
Shoreline Sediment	40	Sunset Bay Shoreline (NA)	1.2 mi @ 84° E
Fish	41	NMP Site Discharge Area (NA)	0.3 mi @ 315° NW (and/or)
Fish	42	NMP Site Discharge Area (NA)	0.6 mi @ 55° NE
Fish	43	Oswego Harbor Area (NA)	5.9 mi @ 237° WSW
Milk	64	Milk Location #55	8.8 mi @ 97° E
Milk (CR)	77	Milk Location (Summerville)	16.0 mi @ 190° S
Food Product	48	Produce Location #6★★ (Bergenstock) (NA)	1.9 mi @ 143° SE
Food Product	49	Produce Location #1★★ (Culeton) (NA)	1.6 mi @ 84° E
Food Product	50	Produce Location #2★★ (Vitullo) (NA)	1.9 mi @ 101° E
Food Product	51	Produce Location #5★★ (C.S. Parkhurst) (NA)	1.5 mi @ 116° ESE
Food Product	52	Produce Location #3★★ (C. Narewski) (NA)	1.5 mi @ 84° E

★ Map = See Figures 5.1-1 and 5.1-2
★★ = Food Product Samples need not necessarily be collected from all listed locations. Collected samples will be of the highest calculated site average D/Q.
(NA) = Not applicable
CR = Control Result (location)

TABLE 5.1 (Cont'd)
NINE MILE POINT NUCLEAR STATION
RADIOLOGICAL ENVIRONMENTAL MONITORING PROGRAM
SAMPLING LOCATIONS

Type of Sample	★ Map Location	Collection Site (Env. Program No.)	Location
Food Product	53	Produce Location #4★★ (P. Parkhurst) (NA)	1.7 mi @ 126° SE
Food Product (CR)	54	Produce Location #7★★ (Mc Millen) (NA)	15.1 mi @ 222° SW
Food Product (CR)	55	Produce Location #8★★ (Denman) (NA)	12.5 mi @ 227° SW
Food Product	56	Produce Location #9★★ (O'Connor) (NA)	1.6 mi @ 171° S
Food Product	57	Produce Location #10★★ (C. Lawton) (NA)	2.3 mi @ 124° SE
Food Product	58	Produce Location #11★★ (C. R. Parkhurst) (NA)	2.0 mi @ 112° ESE
Food Product	59	Produce Location #12★★ (Barton) (NA)	2.0 mi @ 110° ESE
Food Product (CR)	60	Produce Location #13★★ (Flack) (NA)	15.4 mi @ 222° SW
Food Product	61	Produce Location #14★★ (Koeneke) (NA)	1.9 mi @ 97° E
Food Product	62	Produce Location #15★★ (Whaley) (NA)	1.6 mi @ 139° SE
Food Product	63	Produce Location #16★★ (Murray) (NA)	1.2 mi @ 209° SSW
Food Product	67	Produce Location #17★★ (Battles)	1.7 mi @ 98° E
Food Product	68	Produce Location #18★★ (Kronenbitter)	1.5 mi @ 84° E
Food Product	69	Produce Location #119★★ (O'Connor)	1.4 mi @ 132° SE

★ Map = See Figures 5.1-1 and 5.1-2
★★ = Food Product Samples need not necessarily be collected from all listed locations. Collected samples will be of the highest calculated site average D/Q.
(NA) = Not applicable
CR = Control Result (location)

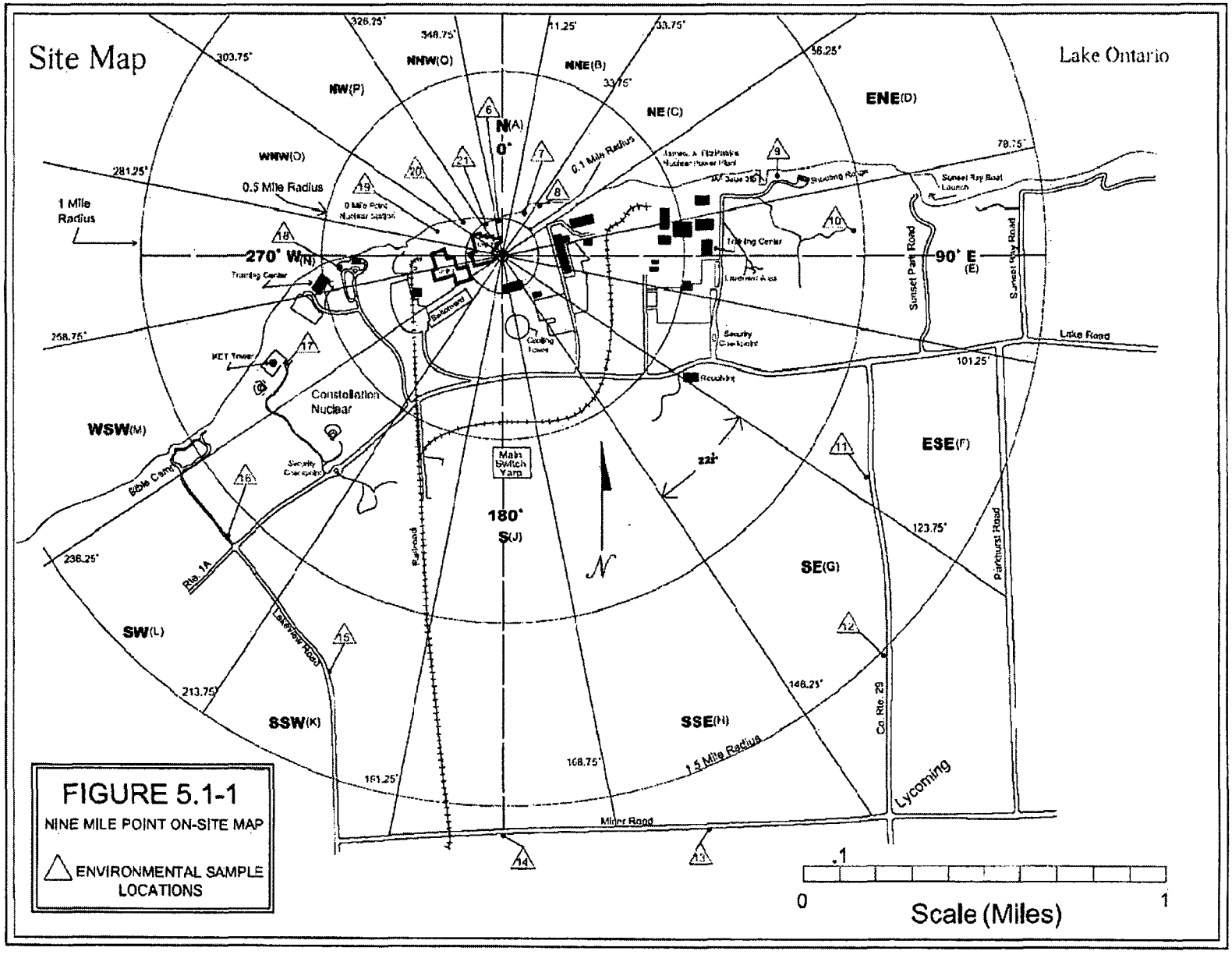
Site Map
Lake Ontario
N(A)
0°
NNE(B)
NE(C)
ENE(D)
90° E
(E)
ESE(F)
SE(G)
SSE(H)
180°
S(J)
SSW(K)
SW(L)
WSW(M)
270° W(N)
WNW(O)
NW(P)
NNW(O)
0.1 Mile Radius
0.5 Mile Radius
1 Mile Radius
1.5 Mile Radius
Training Center
Constellation Nuclear
Main Switch Yard
Cooling Tower
Sunset Park Road
Sunset Bay Road
Lake Road
Parkhurst Road
Co. Rte. 29
Lycoming
Milner Road
Lakeshore Road
Rte. 1A
Bible Camp
Railroad
Boardwalk
Sunset Bay Boat Launch
Security Checkpoint
Roughing
KET Tower
0 Mile Point Nuclear Station
James A. FitzPatrick Nuclear Power Plant
Shooting Range
Launch Area
326.25°
348.75°
11.25°
33.75°
58.25°
78.75°
101.25°
123.75°
146.25°
168.75°
191.25°
213.75°
236.25°
258.75°
281.25°
303.75°
.1
0
1
Scale (Miles)
FIGURE 5.1-1
NINE MILE POINT ON-SITE MAP
ENVIRONMENTAL SAMPLE LOCATIONS

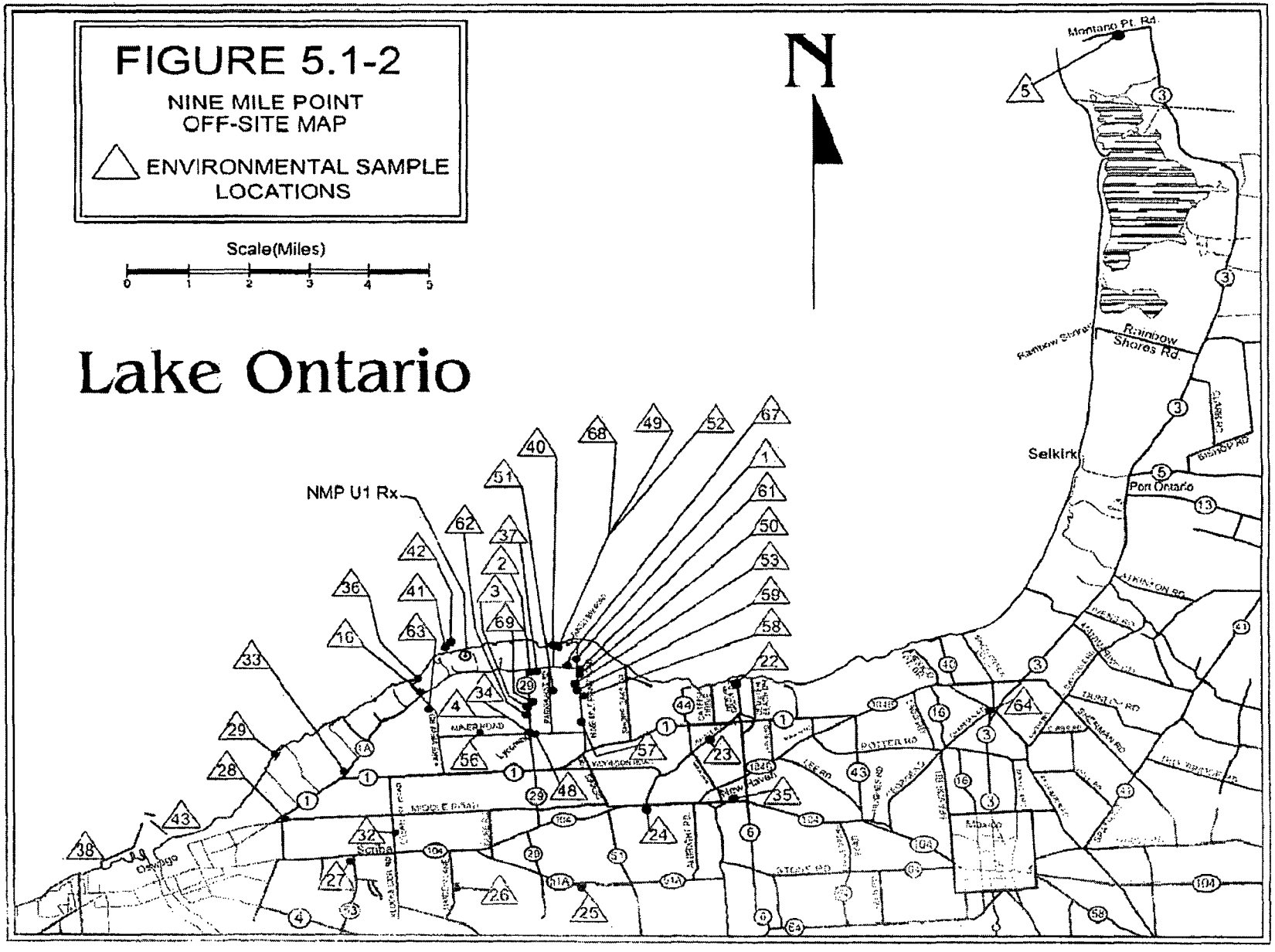
FIGURE 5.1-2
NINE MILE POINT
OFF-SITE MAP
ENVIRONMENTAL SAMPLE LOCATIONS
Scale(Miles)
0 1 2 3 4 5
N
Lake Ontario
NMP U1 Rx
Montano Pt. Rd.
Rainbow Shores Rd.
Selkirk
Port Ontario
Scriba
Mexico
Oswego
MAER ROAD
MIDDLE ROAD
POTTER RD
ATKINSON RD
DUNTON RD
SUCKMAN RD
BRUNSO RD
New Haven

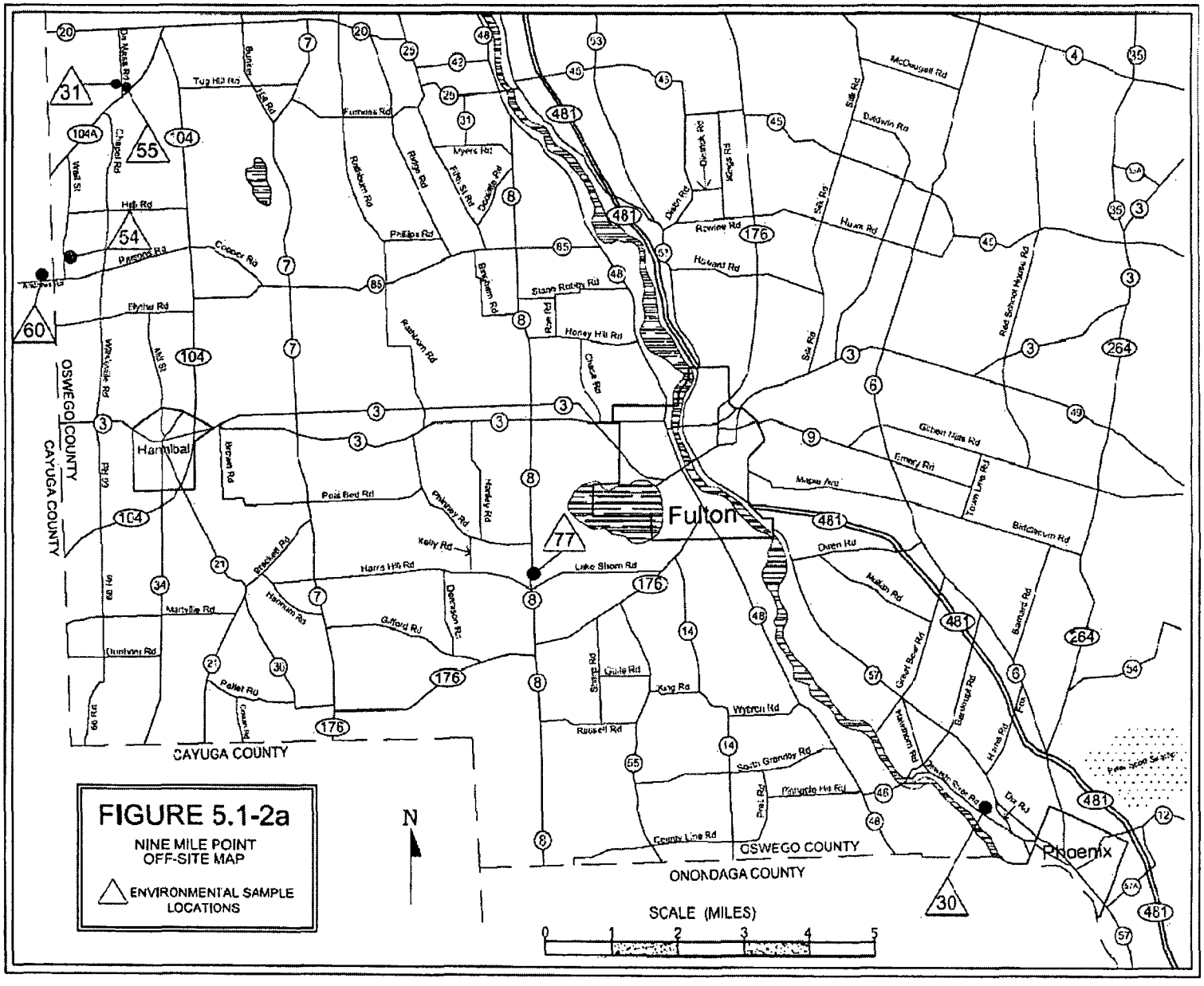
FIGURE 5.1-2a
NINE MILE POINT
OFF-SITE MAP
ENVIRONMENTAL SAMPLE LOCATIONS
N
SCALE (MILES)
0 1 2 3 4 5
Fulton
Hannibal
Phoenix
OSWEGO COUNTY
CAYUGA COUNTY
ONONDAGA COUNTY
31
55
54
60
77
30

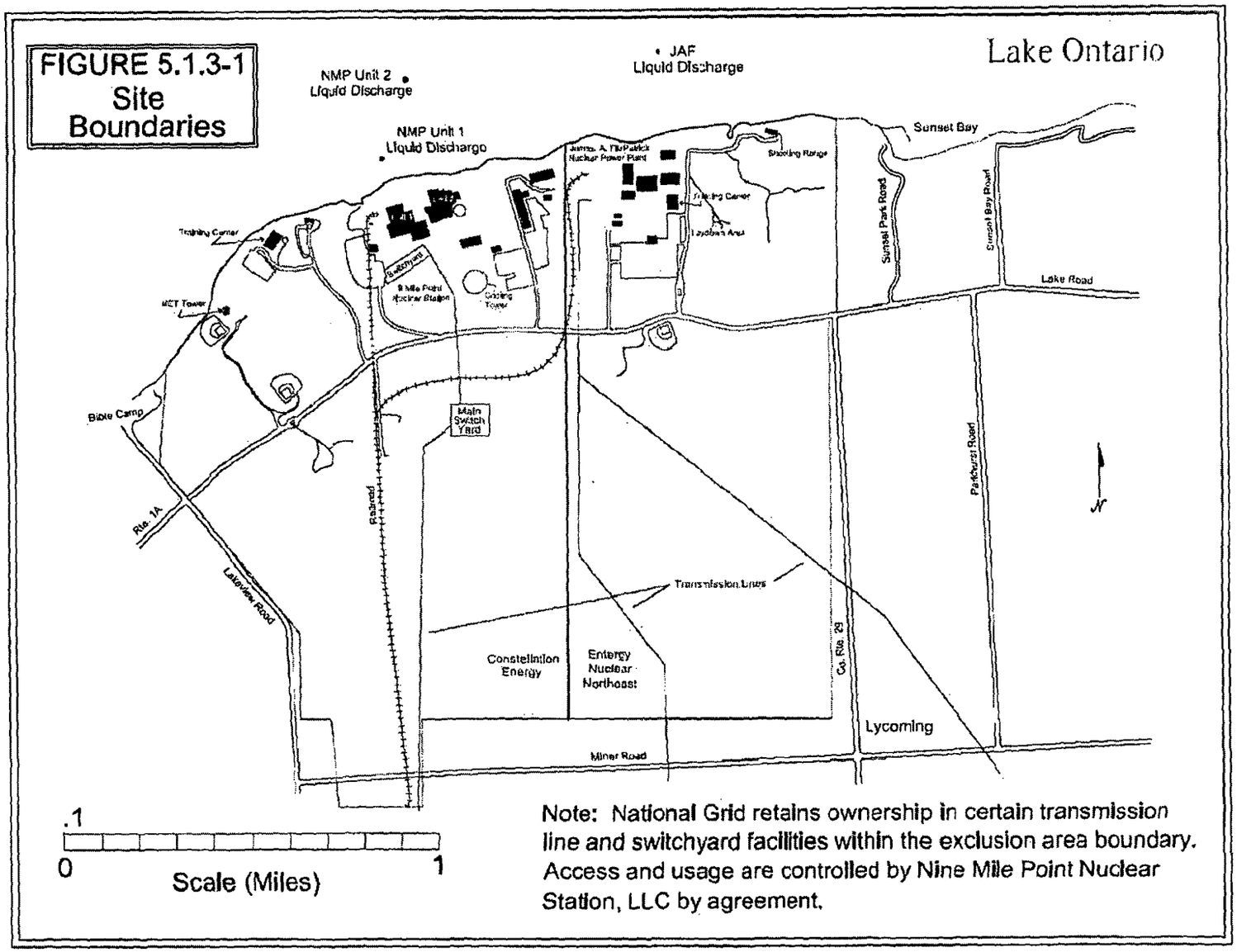
FIGURE 5.1.3-1
Site
Boundaries
Lake Ontario
NMP Unit 2
Liquid Discharge
JAF
Liquid Discharge
NMP Unit 1
Liquid Discharge
James A. FitzPatrick
Nuclear Power Plant
Sunset Bay
Shooting Range
Training Center
Training Center
Laydown Area
Switchyard
9 Mile Point
Nuclear Station
Cooling
Tower
MET Tower
Sunset Park Road
Sunset Bay Road
Lake Road
Bible Camp
Main
Switch
Yard
Rte. 1A
Railroad
Lakeview Road
Parkhurst Road
Transmission Lines
Constellation
Energy
Entergy
Nuclear
Northeast
Co. Rte. 29
Lycoming
Miner Road
.1
0
1
Scale (Miles)
Note: National Grid retains ownership in certain transmission line and switchyard facilities within the exclusion area boundary. Access and usage are controlled by Nine Mile Point Nuclear Station, LLC by agreement.

APPENDIX A
LIQUID DOSE FACTOR DERIVATION

Appendix A

Liquid Effluent Dose Factor Derivation, A_{iat}

A_{iat} (mrem/hr per µCi/ml) which embodies the dose conversion factors, pathway transfer factors (e.g., bioaccumulation factors), pathway usage factors, and dilution factors for the points of pathway origin takes into account the dose from ingestion of fish and drinking water and the sediment. The total body and organ dose conversion factors for each radionuclide will be used from Table E-11 of Regulatory Guide 1.109. To expedite time, the dose is calculated for a maximum individual instead of each age group. The maximum individual dose factor is a composite of the highest dose factor A_{iat} of each nuclide i age group a, and organ t, hence A_{iat}. It should be noted that the fish ingestion pathway is the most significant pathway for dose from liquid effluents. The water consumption pathway is included for consistency with NUREG 0133.

The equation for calculating dose contributions given in section 1.3 requires the use of the composite dose factor A_{it} for each nuclide, i. The dose factor equation for a fresh water site is:

$$A_{iat} = Ko\left[\frac{U_w(e^{-\lambda_i t_{pw}})}{D_w} + U_f(BF)_i(e^{-\lambda_i t_{pf}})(DFL)_{iat} + \frac{69.3\,U_s W}{(D_s)(\lambda_i)} e^{-\lambda_i t_{ps}}(1-e^{-\lambda_i t_b})(DFS)_i\right]$$

Where:

A_{iat}	=	Is the dose factor for nuclide i, age group a, total body or organ t, for all appropriate pathways, (mrem/hr per µCi/ml).
Ko	=	Is the unit conversion factor, 1.14E5=1E6pCi/µCi x 1E3 ml/kg -:- 8760 hr/yr.
U_w	=	Water consumption (l/yr); from Table E-5 of Reg. Guide 1.109.
U_f	=	Fish consumption (Kg/yr); from Table E-5 of Reg. Guide 1.109.
U_s	=	Sediment Shoreline Usage (hr/yr); from Table E-5 of Reg. Guide 1.109.
$(BF)_i$	=	Bioaccumulation factor for nuclide, i, in fish, (pCi/kg per pCi/l), from Table A-1 of Reg. Guide 1.109.
$(DFL)_{iat}$	=	Dose conversion factor for age, nuclide, i, group a, total body or organ t, (mrem/pCi); from Table E-11 of Reg. Guide 1.109.
$(DFS)_i$	=	Dose conversion factor for nuclide i and total body, from standing on contaminated ground (mem/hr per pCi/m^2); from Table E-6 of Reg. Guide 1.109.
D_w	=	Dilution factor from the near field area within one-quarter mile of the release point to the potable water intake for the adult water consumption. This is the Metropolitan Water Board, Onondaga County intake structure located west of the City of Oswego; (unitless).

D_s	=	Dilution factor from the near field area within one quarter mile of the release point to the shoreline deposit (taken at the same point where we take environmental samples 1.5 miles; unitless).
69.3	=	conversion factor .693 x 100, 100 = K_c (L/kg-hr) *40*24 hr/day/.693 in L/m^2-d, and K_c = transfer coefficient from water to sediment in L/kg per hour.
t_{pw}, t_{pf}, t_{ps}	=	Average transit time required for each nuclide to reach the point of exposure for internal dose, it is the total time elapsed from release of the nuclides to either ingestion for water (w) and fish (f) or shoreline deposit (s), (hr).
t_b	=	Length of time the sediment is exposed to the contaminated water, nominally 15 yrs (approximate midpoint of facility operating life), (hrs).
λ_i	=	decay constant for nuclide i (hr^{-1}).
W	=	Shore width factor (unitless) from Table A-2 of Reg. Guide 1.109.

Example Calculation

For I-131 Thyroid Dose Factor for an Adult from a Radwaste liquid effluents release:

$(DFS)_i$	= 2.80E-9	mrem/hr per pCi/m^2			
$(DFL)_{iat}$	= 1.95E-3	mrem/pCi	t_{pw}	=	30 hrs. (w = water)
BF_i	= 15	pCi/Kg per pCi/L	t_{pf}	=	24 hrs. (f = fish)
U_f	= 21	Kg/yr	t_b	=	1.314E5 hrs. (5.48E3 days)
D_w	= 40	unitless	U_w	=	730 L/yr
D_s	= 12	unitless	Ko	=	1.14E5 (pCi/µCi)(ml/kg) / (hr/yr)
U_s	= 12	hr/yr			
W	= 0.3		λ_i	=	3.61E-3hr^{-1}
t_{ps}	= 5.5	hrs (s = Shoreline Sediment)			

These values will yield an A_{iat} Factor of 6.79E4 mrem-ml per µCi-hr as listed in Table 2-4. It should be noted that only a limited number of nuclides are listed on Tables 2-1 to 2-8. These are the most common nuclides encountered in effluents. If a nuclide is detected for which a factor is not listed, then it will be calculated and included in a revision to the ODCM.

In addition, not all dose factors are used for the dose calculations. A maximum individual is used, which is a composite of the maximum dose factor of each age group for each organ as reflected in the applicable chemistry procedures.

APPENDIX B

PLUME SHINE DOSE FACTOR DERIVATION

APPENDIX B

For elevated releases the plume shine dose factors for gamma air (B_i) and whole body (V_i), are calculated using the finite plume model with an elevation above ground equal to the stack height. To calculate the plume shine factor for gamma whole body doses, the gamma air dose factor is adjusted for the attenuation of tissue, and the ratio of mass absorption coefficients between tissue and air. The equations are as follows:

Gamma Air

$$B_i = \Sigma_s \frac{K\mu_a E I_s}{R\Theta V_s}$$

Where:

K^1	=	conversion factor (see below for actual value).
μ_a	=	mass absorption coefficient (cm^2/g; air for B_i, tissue for V_i)
E	=	Energy of gamma ray per disintegration (Mev)
V_s	=	average wind speed for each stability class (s), m/s
R	=	downwind distance (site boundary, m)
Θ	=	sector width (radians)
s	=	subscript for stability class
I_s	=	I function = $I_1 + kI_2$ for each stability class. (unitless, see Regulatory Guide 1.109)
k^2	=	Fraction of the attenuated energy that is actually absorbed in air (see Regulatory Guide 1.109, see below for equation)

Whole Body

$$V_i = 1.11 S_F B_i e^{-\mu_a t_d}$$

Where:

t_d	=	tissue depth (g/cm^2)
S_F	=	shielding factor from structures (unitless)
1.11	=	Ratio of mass absorption coefficients between tissue and air.

Where all other parameters are defined above.

$$^1K = \text{conversion factor} = \frac{\left[3.7\ E10\ \frac{dis}{Ci\text{-}sec}\right]\left[1.6\ E\text{-}6\ \frac{erg}{Mev}\right]}{\left[1293\ \frac{g}{m^3}\right]\left[100\ \frac{erg}{g\text{-}rad}\right]} = 0.46$$

$$^2k = \frac{\mu - \mu_a}{\mu_a}$$

Where:

μ	=	mass attenuation coefficient (cm^2/g; air for B_i, tissue for V_i)
μ_a	=	defined above

APPENDIX B (Cont'd)

There are seven stability classes, A thru F. The percentage of the year that each stability class occurs is taken from the U-2 FSAR. From this data, a plume shine dose factor is calculated for each stability class and each nuclide, multiplied by its respective fraction and then summed.

The wind speeds corresponding to each stability class are, also, taken from the U-2 FSAR. To confirm the accuracy of these values, an average of the 12 month wind speeds for 1985, 1986, 1987 and 1988 was compared to the average of the FSAR values. The average wind speed of the actual data is equal to 6.78 m/s, which compared favorably to the FSAR average wind speed equal to 6.77 m/s.

The average gamma energies were calculated using a weighted average of all gamma energies emitted from the nuclide. These energies were taken from the handbook "Radioactive Decay Data Tables", David C. Kocher.

The mass absorption (μ_a) and attenuation (μ) coefficients were calculated by multiplying the mass absorption (μ_a/μ) and mass attenuation (μ/ρ) coefficients given in the Radiation Health Handbook by the air density equal to 1.293 E-3 g/cc or the tissue density of 1 g/cc where applicable. The tissue depth is $5 g/cm^2$ for the whole body.

The downwind distance is the site boundary.

APPENDIX B (Cont'd)

SAMPLE CALCULATION

Ex. Kr-89 F STABILITY CLASS ONLY - Gamma Air

-DATA

$E = 2.22MeV$ $k = \frac{\mu - \mu_a}{\mu_a} = .871$ $K = 0.46$

$\mu_a = 2.943\ E\text{-}3m^{-1}$ $V_F = 5.55\ m/sec$

$\mu = 5.5064E\text{-}3m^{-1}$ $R = 644m$

$\Theta = 0.39$

$\Theta_z = 19m$.....vertical plume spread taken from "Introduction to Nuclear Engineering", John R. LaMarsh

-I Function

$U\Theta_z = 0.06$

$I_1 = 0.33$

$I_2 = 0.45$

$I = I_1 + kI_2 = 0.33 + (0.871)(0.45) = 0.72$

$$B_i = \frac{0.46\left[\frac{dis.}{Ci\text{-}sec}\right]\left[\frac{Mev}{ergs}\right](2.943E\text{-}3m^{-1})(2.22Mev)(.72)}{(\pi^{1/2})\ (g/m^3)\ \left(\frac{ergs}{g\text{-}rad}\right)\ (5.55\ m/s)\ (.39)\ (644m)}$$

$$= 1.55(-6)\ \frac{rad/s}{Ci/s}\ \frac{(3600\ s/hr)(24\ h/d)(365\ d/y)(1E3mrad/rad)}{\left(\frac{1E6\mu Ci}{Ci}\right)}$$

$$= 2.76(-2)\ \frac{mrad/yr}{\mu Ci/sec}$$

$$V_i = 1.11(.7)\left[2.76(-2)\ \frac{mrad/yr}{\mu Ci/sec}\right]\left[e^{-(.0253\ cm^2/g)(5g/cm^2)}\right]$$

$$= 1.89(-2)\ \frac{mrad/yr}{\mu Ci/sec}$$

NOTE: The above calculation is for the F stability class only. For Table 3-2 and procedure values, a weighted fraction of each stability class was used to determine the B_i and V_i values.

APPENDIX C

ORGAN DOSE PARAMETERS FOR IODINE 131 and 133, PARTICULATES AND TRITIUM

APPENDIX C

ORGAN DOSE PARAMETERS FOR IODINE - 131 AND - 133, PARTICULATES AND TRITIUM

This appendix contains the methodology which was used to calculate the organ dose factors for I-131, I-133, particulates, and tritium. The dose factor, R_i, was calculated using the methodology outlined in NUREG-0133. The radioiodine and particulate ODCM Part I (Control DLCO 3.6.15) is applicable to the location in the unrestricted area where the combination of existing pathways and receptor age groups indicates the maximum potential exposure occurs, i.e., the critical receptor. Washout was calculated and determined to be negligible. R_i values have been calculated for the adult, teen, child and infant age groups for all pathways. However, for dose compliance calculations, a maximum individual is assumed that is a composite of highest dose factor of each age group for each organ and pathway. The methodology used to calculate these values follows:

C.1 Inhalation Pathway

$$R_i(I) = K'(BR)_a(DFA)_{ija}$$

where:

$R_i(I)$ = dose factor for each identified radionuclide i of the organ of interest (units = mrem/yr per $\mu Ci/m^3$);

K' = a constant of unit conversion, 1E6 pCi/µCi

$(BR)_a$ = Breathing rate of the receptor of age group a, (units = m^3/yr);

$(DFA)_{ija}$ = The inhalation dose factor for nuclide i, organ j and age group a, and organ t (units = mrem/pCi).

The breathing rates $(BR)_a$ for the various age groups, as given in Table E-5 of Regulatory Guide 1.109 Revision 1, are tabulated below.

Age Group (a)	Breathing Rate (m^3/yr)
Infant	1400
Child	3700
Teen	8000
Adult	8000

Inhalation dose factors $(DFA)_{ija}$ for the various age groups are given in Tables E-7 through E-10 of Regulatory Guide 1.109 Revision 1.

C.2 Ground Plane Pathway

$$R_i(G) = \frac{K'K''(SF)(DFG)_i \ (1-e^{-\lambda_i t})}{\lambda_i}$$

Where:

$R_i(G)$	=	Dose factor for the ground plane pathway for each identified radionuclide i for the organ of interest (units = m^2-mrem/yr per µCi/sec)
K'	=	A constant of unit conversion, 1E6 pCi/µCi
K"	=	A constant of unit conversion, 8760 hr/year
λ_i	=	The radiological decay constant for radionuclide i, (units = sec^{-1})
t	=	The exposure time, sec, 4.73E8 sec (15 years)
$(DFG)_i$	=	The ground plane dose conversion factor for radionuclide i; (units = mrem/hr per pCi/m^2)
SF	=	The shielding factor (dimensionless)

A shielding factor of 0.7 is discussed in Table E-15 of Regulatory Guide 1.109 Revision 1. A tabulation of DFG_i values is presented in Table E-6 of Regulatory Guide 1.109 Revision 1.

C.3 Grass-(Cow or Goat)-Milk Pathway

$$R_i(C) = \frac{K'Q_f(U_{ap})\,F_m(r)(DFL)_{iat}}{(\lambda_i + \lambda_w)} \left[\frac{f_p f_s}{Y_p} + \frac{(1-f_p f_s)}{Y_s}(e^{-\lambda_i t_h}) \right] e^{-\lambda_i t_f}$$

Where:

$R_i(C)$	=	Dose factor for the cow milk or goat milk pathway, for each identified radionuclide i for the organ of interest, (units = m^2-mrem/yr per µCi/sec)
K'	=	A constant of unit conversion, 1E6 pCi/µCi
Q_f	=	The cow's or goat's feed consumption rate, (units = kg/day-wet weight)
U_{ap}	=	The receptor's milk consumption rate for age group a, (units = liters/yr)
Y_p	=	The agricultural productivity by unit area of pasture feed grass, (units = kg/m^2)
Y_s	=	The agricultural productivity by unit area of stored feed, (units = kg/m^2)
F_m	=	The stable element transfer coefficients, (units = pCi/liter per pCi/day)
r	=	Fraction of deposited activity retained on cow's feed grass
$(DFL)_{iat}$	=	The ingestion dose factor for nuclide i, age group a, and total body or organ t (units = mrem/pCi)
λ_i	=	The radiological decay constant for radionuclide i, (units=sec^{-1})
λ_w	=	The decay constant for removal of activity on leaf and plant surfaces by weathering equal to 5.73E-7 sec^{-1} (corresponding to a 14 day half-life)
t_f	=	The transport time from pasture to cow or goat, to milk, to receptor, (units = sec)
t_h	=	The transport time from pasture, to harvest, to cow or goat, to milk, to receptor (units = sec)

f_p	=	Fraction of the year that the cow or goat is on pasture (dimensionless)
f_s	=	Fraction of the cow feed that is pasture grass while the cow is on pasture (dimensionless)

Milk cattle and goats are considered to be fed from two potential sources, pasture grass and stored feeds. Following the development in Regulatory Guide 1.109 Revision 1, the value of f_s is considered unity in lieu of site specific information. The value of f_p is 0.5 based on 6 month grazing period. This value for f_p was obtained from the environmental group.

Table C-1 contains the appropriate values and their source in Regulatory Guide 1.109 Revision 1.

The concentration of tritium in milk is based on the airborne concentration rather than the deposition. Therefore, the $R_T(C)$ is based on X/Q:

$$R_T(C) = K'K''' F_m Q_f U_{ap} (DFL)_{iai} \; 0.75(0.5/H)$$

Where:

$R_T(C)$	=	Dose factor for the cow or goat milk pathway for tritium for the organ of interest, (units = mrem/yr per $\mu Ci/m^3$)
K'''	=	A constant of unit conversion, 1E3 g/kg
H	=	Absolute humidity of the atmosphere, (units = g/m^3)
0.75	=	The fraction of total feed that is water
0.5	=	The ratio of the specific activity of the feed grass water to the atmospheric water

Other values are given previously. A site specific value of H equal to 6.14 g/m^3 is used. This value was obtained from the environmental group using actual site data.

C.4 Grass-Cow-Meat Pathway

$$R_i(C) = \frac{K'Q_f(U_{ap})\,F_f(r)(DFL)_{iat}}{(\lambda_i + \lambda_w)} \left[\frac{f_p f_s}{Y_p} + \frac{(1-f_p f_s)}{Y_s}\left(e^{-\lambda_i t_h}\right) \right] e^{-\lambda_i t_f}$$

$R_i(M)$	=	Dose factor for the meat ingestion pathway for radionuclide i for any organ of interest, (units = m^2-mrem/yr per μCi/sec)
F_f	=	The stable element transfer coefficients, (units = pCi/kg per pCi/day)
U_{ap}	=	The receptor's meat consumption rate for age group a, (units = kg/year)
t_h	=	The transport time from harvest, to cow, to receptor, (units = sec)
t_f	=	The transport time from pasture, to cow, to receptor, (units = sec)

All other terms remain the same as defined for the milk pathway. Table C-2 contains the values which were used in calculating $R_i(M)$.

The concentration of tritium in meat is based on airborne concentration rather than deposition. Therefore, the $R_T(M)$ is based on X/Q.

$$R_T(M) = K'K'''F_f Q_f U_{ap}(DFL)_{iat}\,[0.75(0.5/H)]$$

Where:

$R_T(M)$	=	Dose factor for the meat ingestion pathway for tritium for any organ of interest, (units = mrem/yr per μCi/m^3)

All other terms are defined above.

C.5 Vegetation Pathway

The integrated concentration in vegetation consumed by man follows the expression developed for milk. Man is considered to consume two types of vegetation (fresh and stored) that differ only in the time period between harvest and consumption, therefore:

$$R_i(V) = K' \frac{r}{Y_v(\lambda_i + \lambda_w)} (DFL)_{iat} \left[U^L{}_a F_L e^{-\lambda_i t_L} + U^S{}_a F_g e^{-\lambda_i t_h} \right]$$

Where:

$R_i(V)$	=	Dose factor for vegetable pathway for radionuclide i for the organ of interest, (units = m^2-mrem/yr per μCi/sec)
K'	=	A constant of unit conversion, 1E6 pCi/μCi
U^L_a	=	The consumption rate of fresh leafy vegetation by the receptor in age group a, (units = kg/yr)
U^S_a	=	The consumption rate of stored vegetation by the receptor in age group a (units = kg/yr)
F_L	=	The fraction of the annual intake of fresh leafy vegetation grown locally
F_g	=	The fraction of the annual intake of stored vegetation grown locally
t_L	=	The average time between harvest of leafy vegetation and its consumption, (units = sec)
t_h	=	The average time between harvest of stored vegetation and its consumption, (units = sec)
Y_v	=	The vegetation areal P density, (units = kg/m^2)

All other factors have been defined previously.

Table C-3 presents the appropriate parameter values and their source in Regulatory Guide 1.109 Revision 1.

In lieu of site-specific data, values for F_L and F_g of, 1.0 and 0.76, respectively, were used in the calculation. These values were obtained from Table E-15 of Regulatory Guide 1.109 Revision 1.

The concentration of tritium in vegetation is based on the airborne concentration rather than the deposition. Therefore, the $R_T(V)$ is based on X/Q:

$$R_T(V) = K'K''' [U^L_a f_L + U^s_a f_g](DFL)_{iat}\ 0.75(0.5/H)$$

Where:

$R_T(V)$	=	dose factor for the vegetable pathway for tritium for any organ of interest, (units = mrem/yr per $\mu Ci/m^3$).

All other terms are defined in preceeding sections.

TABLE C-1

Parameters for Grass-(Cow or Goat)-Milk Pathways

Parameter	Value	Reference (Reg. Guide 1.109 Rev. 1)
Q_f (kg/day)	50 (cow) 6 (goat)	Table E-3 Table E-3
r	1.0 (radioiodines) 0.2 (particulates)	Table E-15 Table E-15
$(DFL)_{ija}$ (mrem/pCi)	Each radionuclide	Tables E-11 to E-14
F_m (pCi/liter per pCi/day)	Each stable element	Table E-1 (cow) Table E-2 (goat)
Y_s (kg/m^2)	2.0	Table E-15
Y_p (kg/m^2)	0.7	Table E-15
t_h (seconds)	7.78×10^6 (90 days)	Table E-15
t_f (seconds)	1.73×10^5 (2 days)	Table E-15
U_{ap} (liters/yr)	330 infant 330 child 400 teen 310 adult	Table E-5 Table E-5 Table E-5 Table E-5

TABLE C-2

Parameters for the Grass-Cow-Meat Pathway

Parameter	Value	Reference (Reg. Guide 1.109 Rev. 1)
r	1.0 (radioiodines) 0.2 (particulates)	Table E-15 Table E-15
F_f (pCi/Kg per pCi/day)	Each stable element	Table E-1
U_{ap} (Kg/yr)	0 infant 41 child 65 teen 110 adult	Table E-5 Table E-5 Table E-5 Table E-5
$(DFL)_{ija}$ (mrem/pCi)	Each radionuclide	Tables E-11 to E-14
Y_p (kg/m^2)	0.7	Table E-15
Y_s (kg/m^2)	2.0	Table E-15
t_h (seconds)	7.78E6 (90 days)	Table E-15
t_f (seconds)	1.73E6 (20 days)	Table E-15
Q_f (kg/day)	50	Table E-3

TABLE C-3

Parameters for the Vegetable Pathway

Parameter	Value	Reference (Reg. Guide 1.109 Rev. 1)
r (dimensionless)	1.0 (radioiodines)	Table E-1
	0.2 (particulates)	Table E-1
$(DFL)_{ija}$ (mrem/pCi)	Each radionuclide	Tables E-11 to E-14
$U^L)_a$ (kg/yr) - infant	0	Table E-5
- child	26	Table E-5
- teen	42	Table E-5
- adult	64	Table E-5
$U^S)_a$ (kg/yr) - infant	0	Table E-5
- child	520	Table E-5
- teen	630	Table E-5
- adult	520	Table E-5
t_L (seconds)	8.6E4 (1 day)	Table E-15
t_h (seconds)	5.18E6 (60 days)	Table E-15
Y_v (kg/m^2)	2.0	Table E-15

APPENDIX D

**DIAGRAMS OF RADIOACTIVE LIQUID
AND GASEOUS EFFLUENT TREATMENT SYSTEMS
AND
MONITORING SYSTEMS**

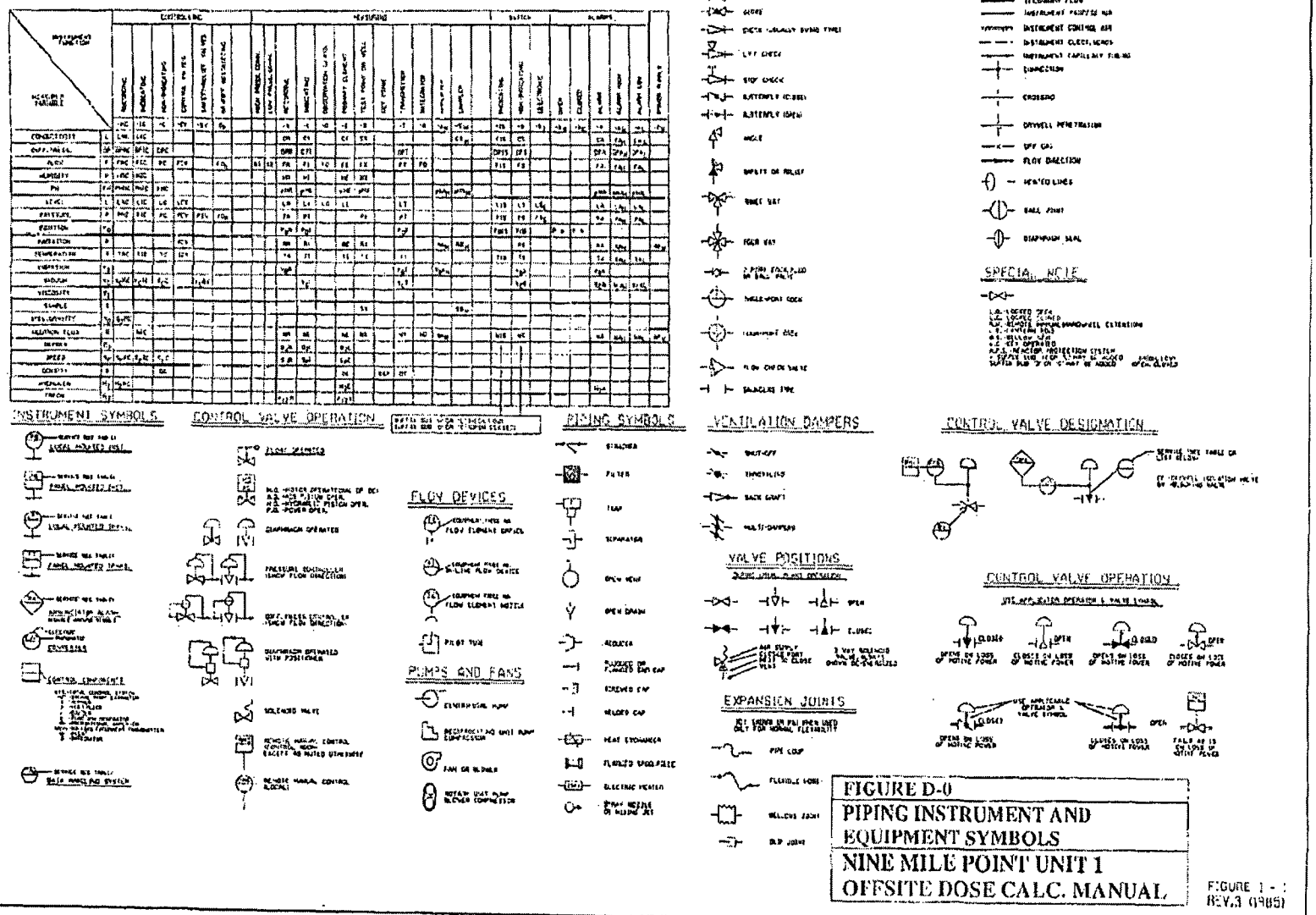

FIGURE D-0
PIPING INSTRUMENT AND EQUIPMENT SYMBOLS
NINE MILE POINT UNIT 1
OFFSITE DOSE CALC. MANUAL

FIGURE 1 - 1
REV.3 (9805)

FSAR 14
A- 13401

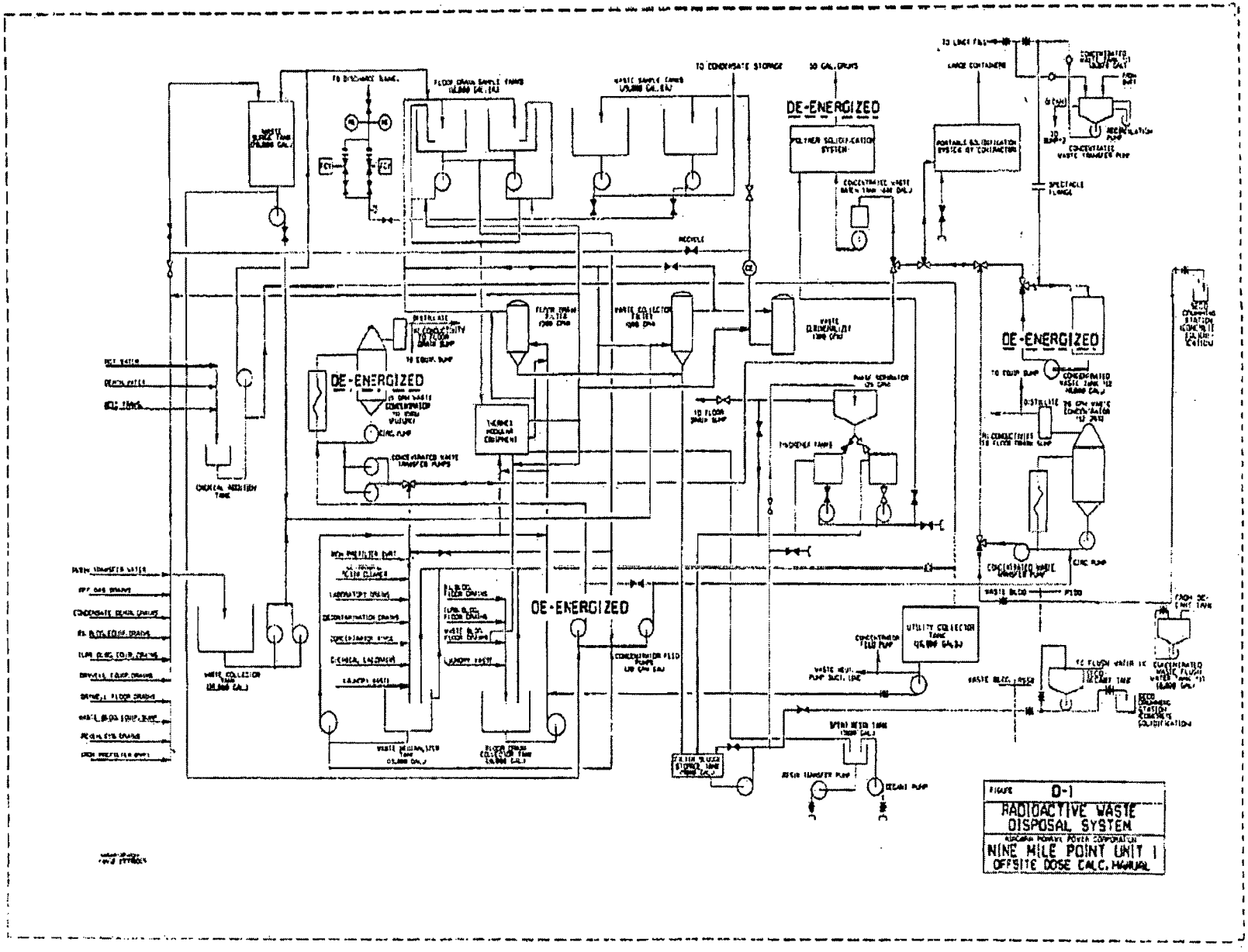
DE-ENERGIZED
DE-ENERGIZED
DE-ENERGIZED
DE-ENERGIZED
FIGURE D-1
RADIOACTIVE WASTE DISPOSAL SYSTEM
NINE MILE POINT UNIT 1
OFFSITE DOSE CALC. MANUAL

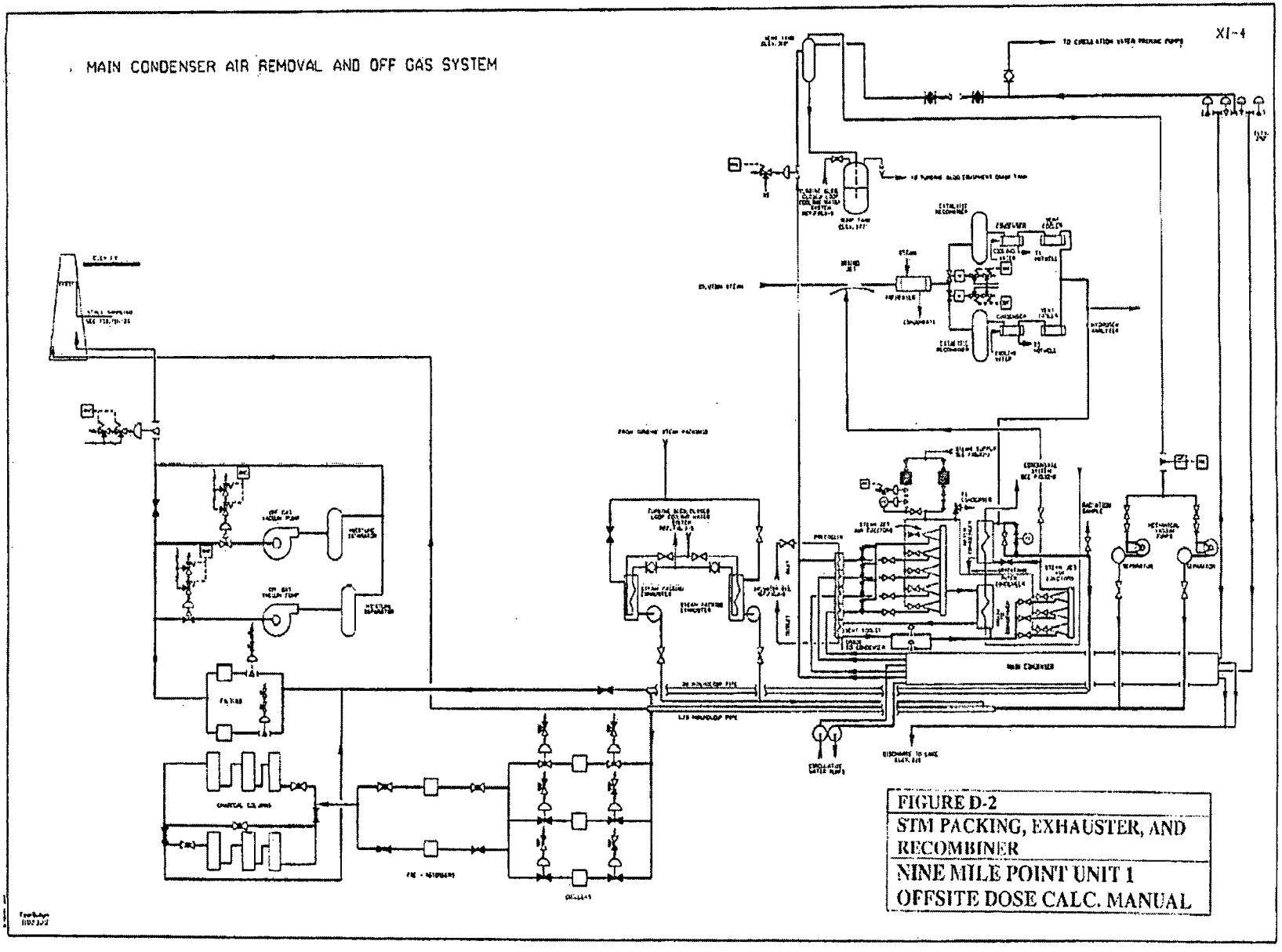

FIGURE D-2
STM PACKING, EXHAUSTER, AND RECOMBINER
NINE MILE POINT UNIT 1
OFFSITE DOSE CALC. MANUAL

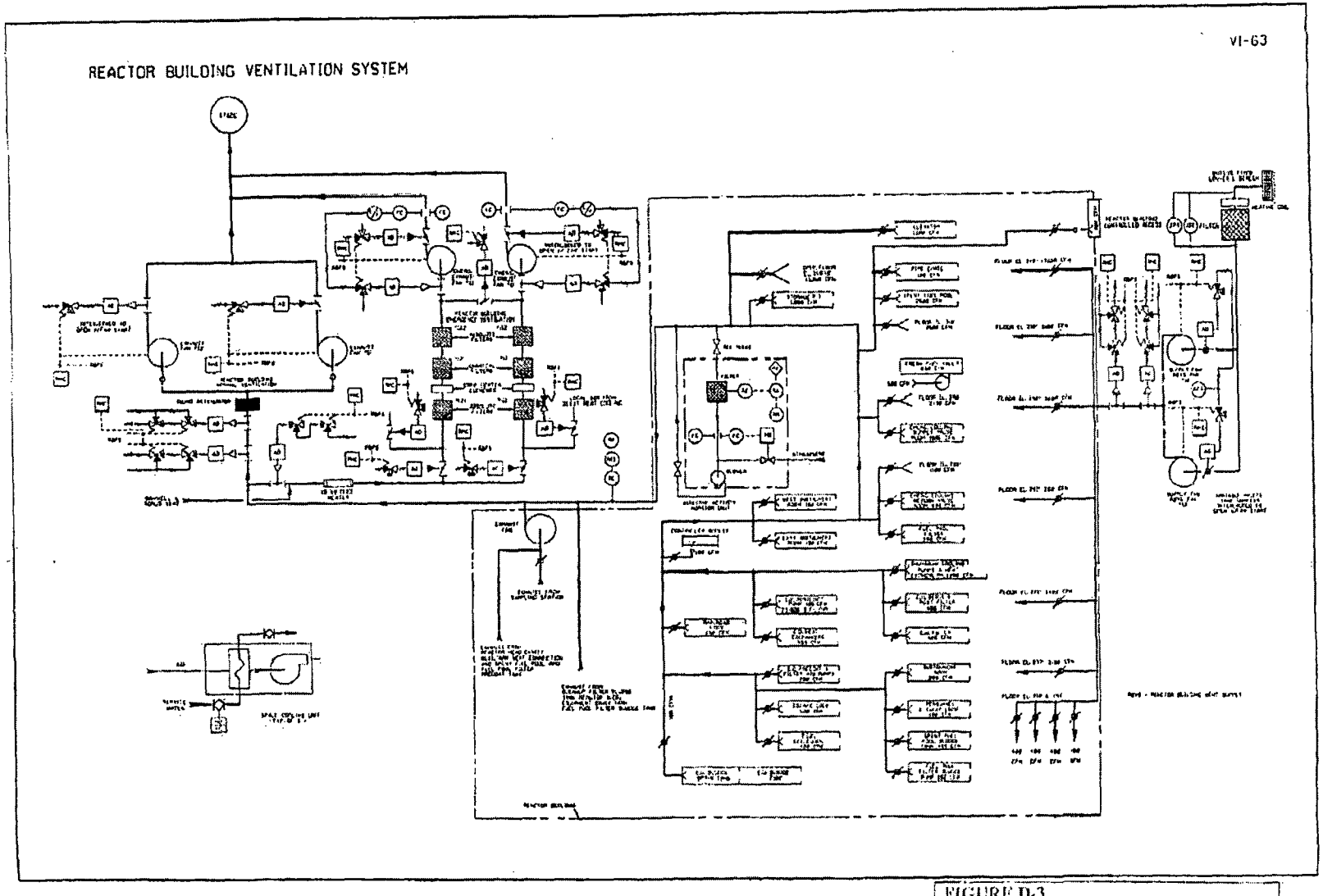

FIGURE D-3
REACTOR BUILDING VENT SYSTEM
NINE MILE POINT UNIT 1
OFFSITE DOSE CALC. MANUAL

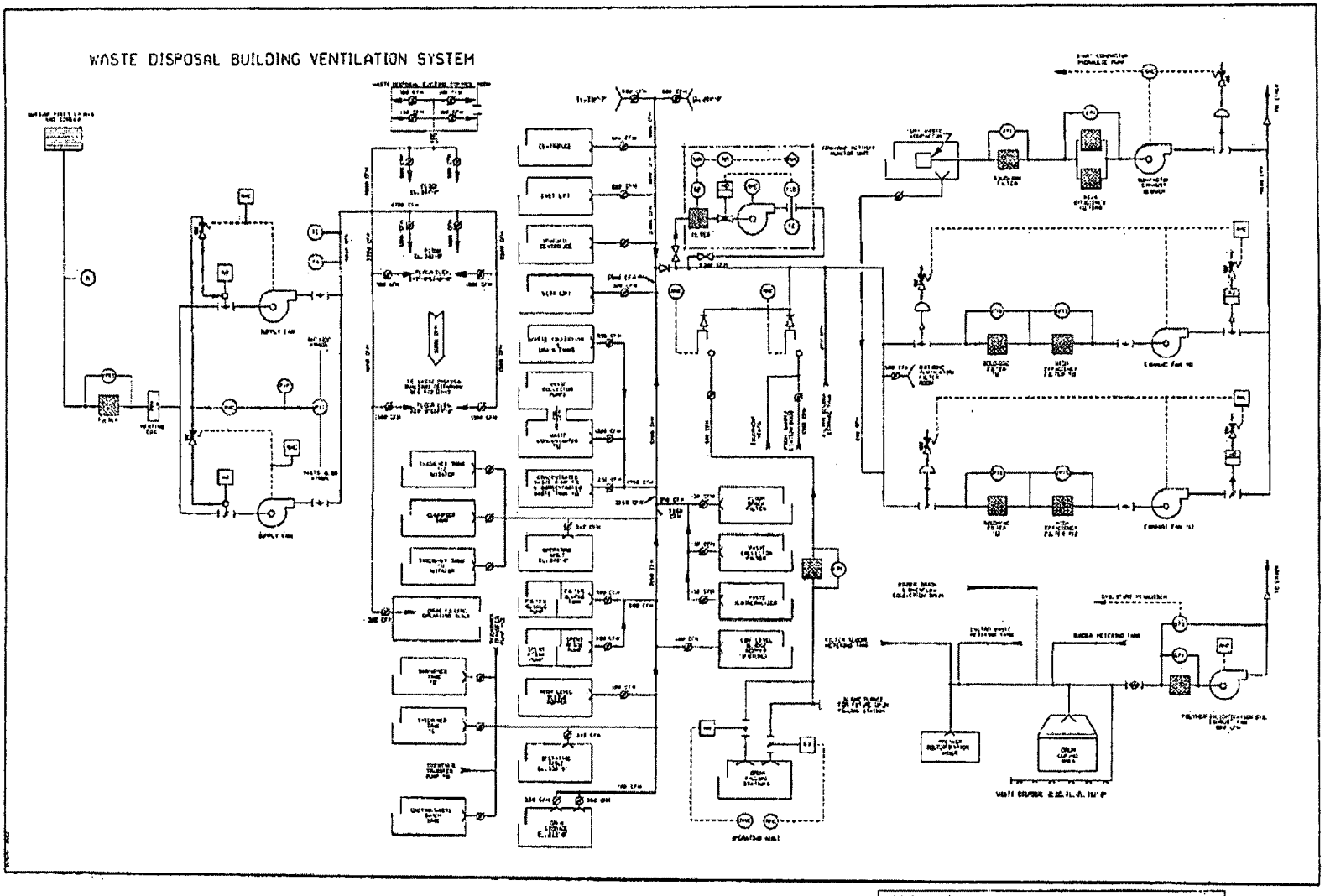

FIGURE D-4
WASTE DISPOSAL BUILDING VENT SYSTEM
NINE MILE POINT UNIT 1
OFFSITE DOSE CALC. MANUAL

STACK - PLAN AND ELEVATION

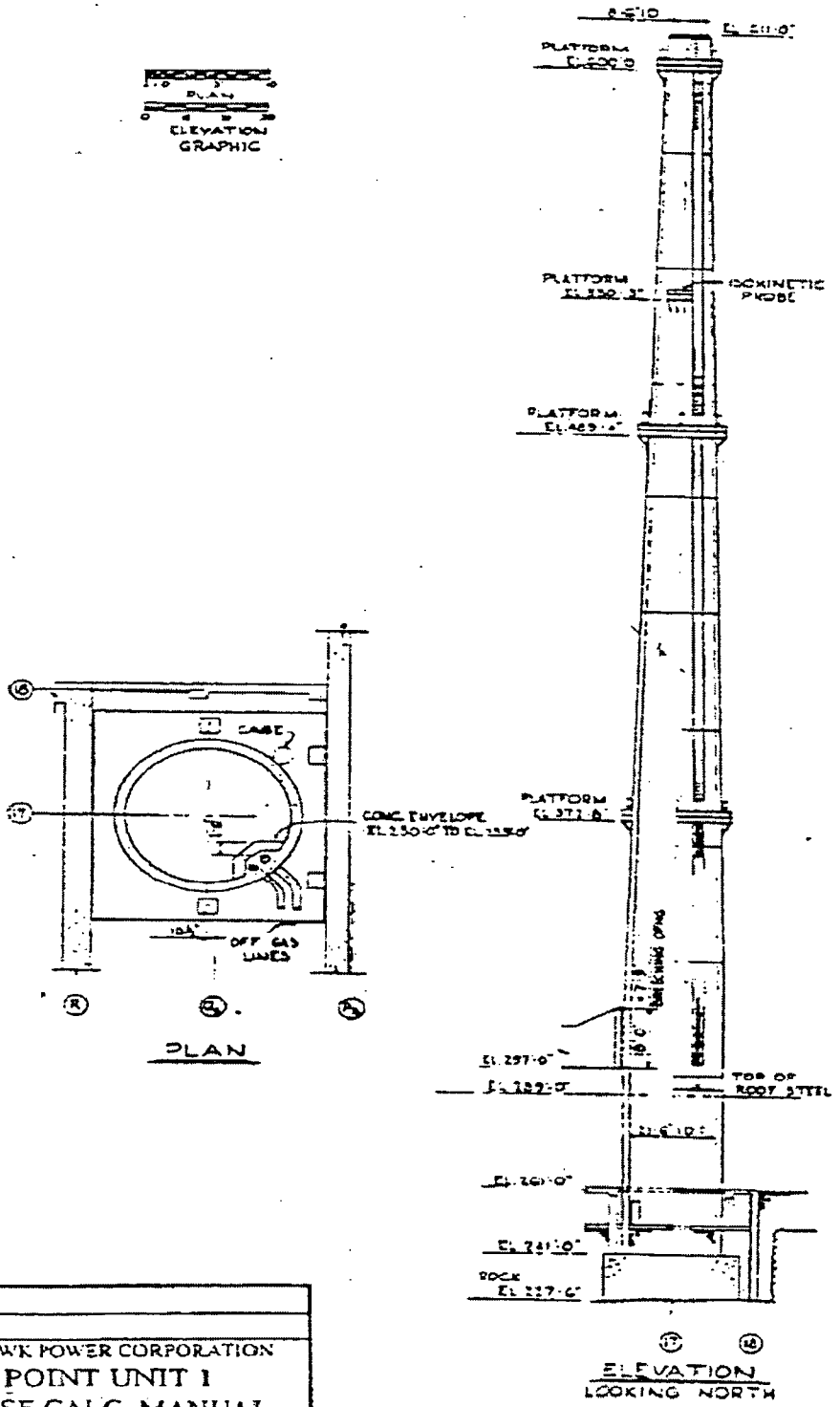

FIGURE D-5
NMP-1 STACK
NIAGARA MOHAWK POWER CORPORATION
NINE MILE POINT UNIT 1
OFFSITE DOSE CALC. MANUAL

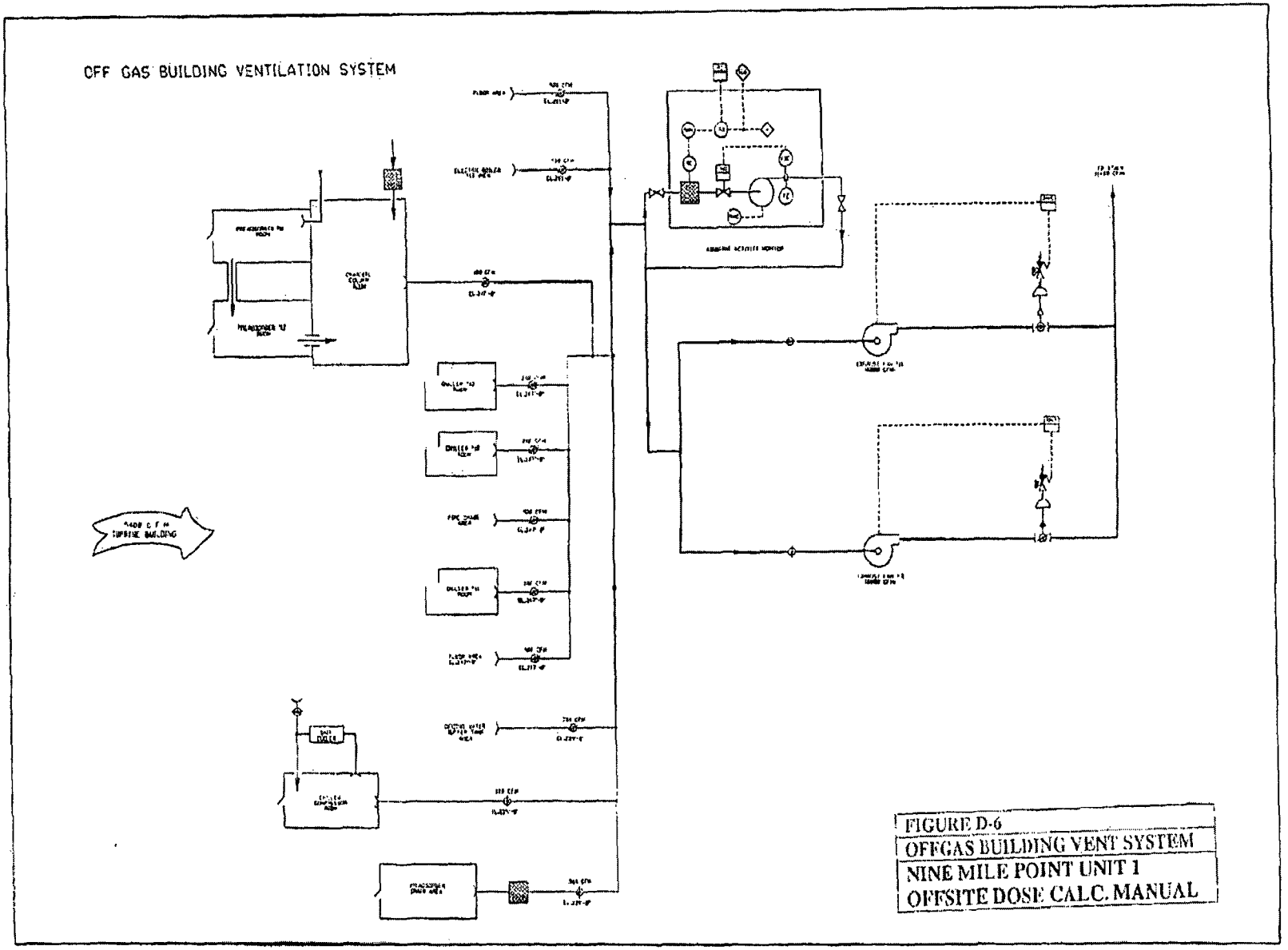

FIGURE D-6
OFFGAS BUILDING VENT SYSTEM
NINE MILE POINT UNIT 1
OFFSITE DOSE CALC. MANUAL

This Page and Figure Deleted.

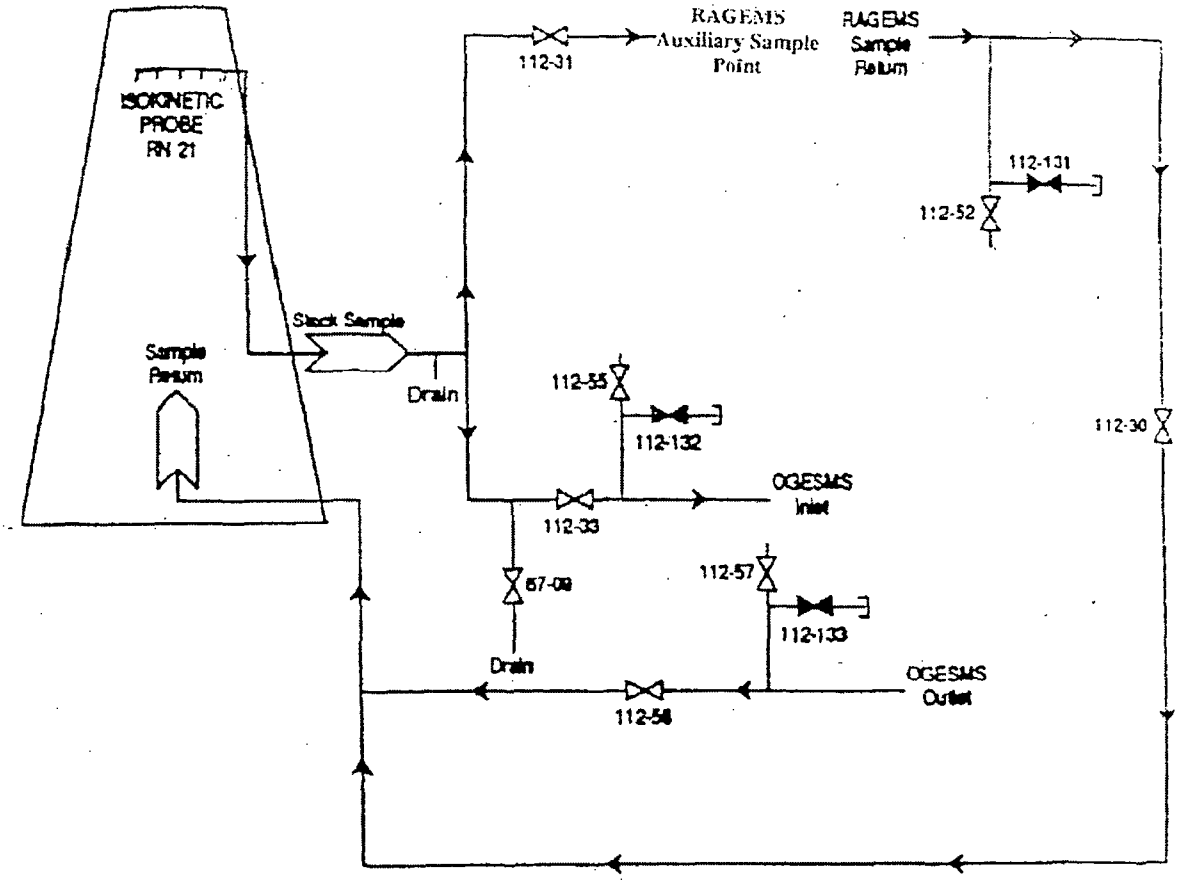

Figure D- 8
Stack Sample and Sample Return
NIAGARA MOHAWK POWER CORPORATION **NINE MILE POINT - UNIT 1** OFFSITE DOSE CALC. MANUAL

This Page and Figure Deleted.

This Page and Figure Deleted.

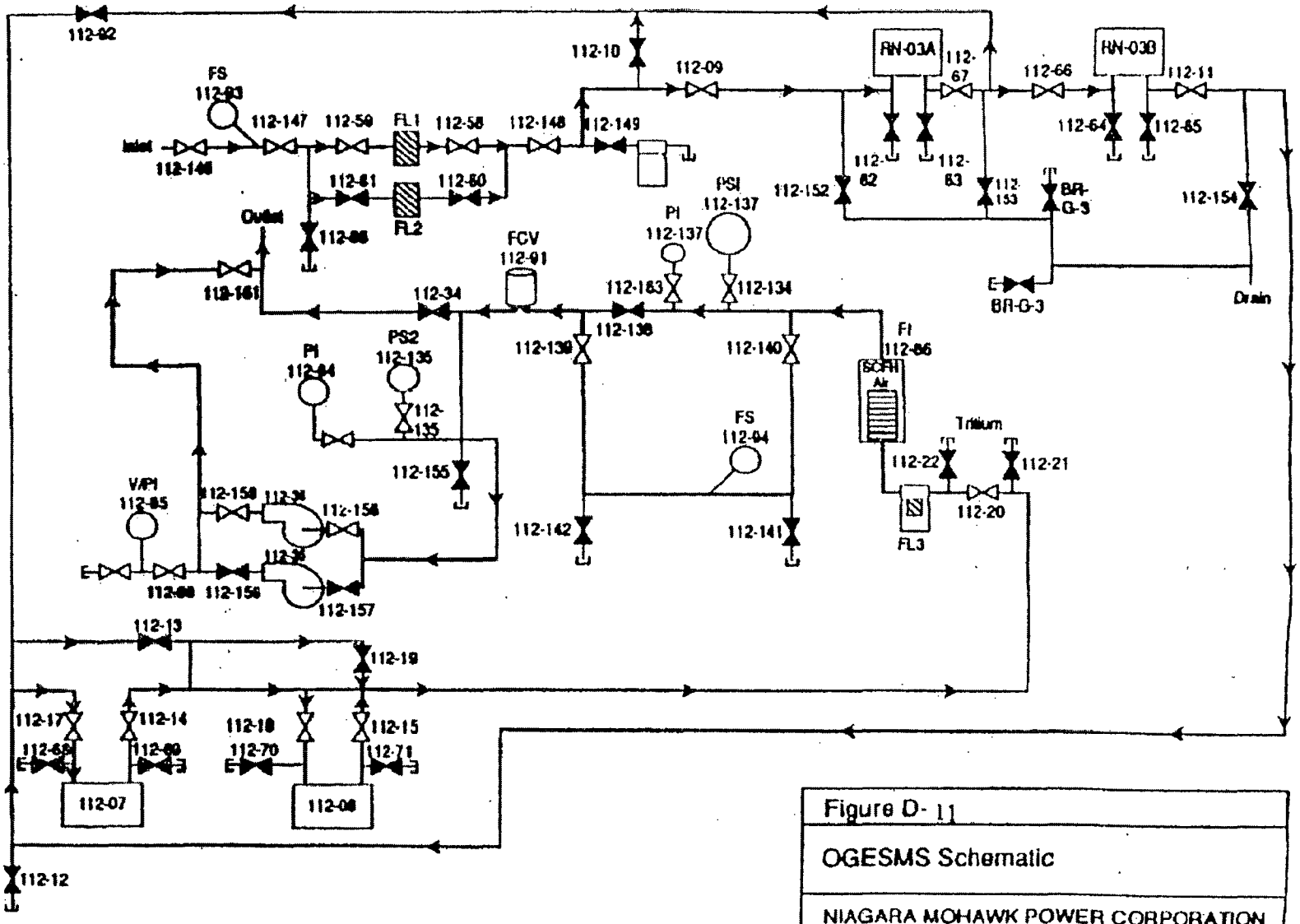

Figure D- 11

OGESMS Schematic

NIAGARA MOHAWK POWER CORPORATION
NINE MILE POINT - UNIT 1
OFFSITE DOSE CALC. MANUAL

Unit 1 X Unit 2 _____ Reporting Period January - December 2012

Off-Site Dose Calculation Manual (ODCM)

Revision 34

ATTACHMENT 14

Unit 1 X Unit 2 _____ Reporting Period January - December 2012

Off-Site Dose Calculation Manual (ODCM)

Revision 34

CENG

a joint venture of

Constellation Energy EDF

NINE MILE POINT
NUCLEAR STATION

NINE MILE POINT UNIT 1

OFF-SITE DOSE CALCULATION MANUAL (ODCM)

REVISION 34

APPROVALS	SIGNATURES	DATE
Prepared by:	G. R. Stinson Principle Chemist	12/13/12
Reviewed by:	C. L. Widay-Poindexter Supervisor-Chemistry Support	12/14/12

M. R. Faivus	General Supervisor - Chemistry	12-14-12
M. A. Philippon	Plant General Manager	12-14-12

SUMMARY OF REVISIONS

Revision 34 (Effective December 2012)

PAGE	*DATE*
1, 2, 5, 6, 8, 9, 11-13/15-18, 21, 24, 25, 36-44, 47-49, 52-81, 86-116	February 1987
3, 4, 7, 10, 14, 19, 20, 22, 23, 26-35	December 1987
45, 46, 50, 51, 82-85	January 1988
*29	May 1988 (Reissue)
*64, 77, 78	May 27, 1988 (Reissue)
i, 19, 21, 22A, 22B, 124, 25, 26, 112 i, ii, iii, 12-16, 18, 28-40, 45-47	February 1990
52, 55, 59-89, 92, 93, 97-129	June 1990
91-93, 95	June 1992
3, 4, 21, 92, 95a-c	February 1993
10, 16-20	March 1993
5, 13, 18, 20, 25-30, 65, 79	June 1993
66, 69	December 1993
16, 69	June 1994
10, 12	February 1995
10, 18, 67, 69	December 1995
5, D-1	June 1996
5, D-1	June 1997
5, D-1	April 1999
D-1	December 1999
iv, 3, 6, 8, 9, 11, 13, 14, 27, 29, 65, 66, 69, 69a	December 2001
Added Part I & Revised Part II - II 2-16, II 20-23, II 25, II 26, II 29, II 30	November 2002
iv, v, vii, viii, I 1.0-1 and 2, I 3.1-1, 7 to 9, 11, 14, 18 to 24, 26 and 27, I B 3.1-1, 3 to 7, I 6.0-2, 4, and 5, II 2, II 3, II 4, II 6, II 9 to 11, II 13 to 22, II 42, Figure D-8, Deleted Figures D-7, D-9, D-10	November 2002

Revision 34 (Effective December 2012)

PAGE	*DATE*
x, I 1.0-1, I 3.1-22, I 3.1-38 and 39, I B 3.1-1, I 6.1-0 and 3, II 11, 12, 17, 18, 24 and 25	July 2003
I 3.1-7, I 3.1-8, I 3.1-9, I 3.1-10, I 3.1-11, I 3.1-12 and I B 3.1-1	February 2004
II 70, II 71, and II 73	December 2005
I 3.1-5, I 3.1-10, II 6, and II 24	May 2006
I 1.0-1, I 3.1-1, I 3.1-2, I 3.1-3, I 3.1-4, I 3.1-5, I 3.1-7, I 3.1-8, I 3.1-9, I 3.1-10 I 3.1-11, I 3.1-12, I 3.1-23, I 3.1-27, I 3.1-28, I B 3.1-1, I B 3.1-8, I 6.0-4, II 2, II 5, II 11, II 17, and II 25	September 2006
viii, I 3.1-8, I 3.1-20, I 3.1-21, I 3.1-27, II 1, II 15, II 23, II 25, II 36 – II 43, II 45, II 46, II 48 – II 51, II 53, II 55 – II 65, II 67, II 70, II 71, II 78, II 83, II 92	February 2007
I 3.1-16, II 68 – II 71, II 73, D-1	October 2009
I 6.0-3	September 2010
I 3.1-9, I 3.1-12, II 5	February 2011
I 3.1-10, I 3.1-25, I B 3.1-7, II 10, II 28, II 30, II 32, II 69	June 2012
I 3.1-16, I B 3.1-2, II 7, II 74	December 2012

ODCM - NINE MILE POINT UNIT 1

TABLE OF CONTENTS

PAGE

List of Tables ..... **viii**

List of Figures ..... **ix**

INTRODUCTION ..... **x**

PART I – Radiological Effluent Controls

SECTION 1.0:	**Definitions**	**I 1.0-0**
SECTION 2.0:	**Not Used**	
SECTIONS 3.0/4.0:	**Applicability**	**I 3.0-0**
D 3/4.6.14	**RADIOACTIVE EFFLUENT INSTRUMENTATION**	**I 3.1-1**
D 3/4.6.14.a.	**Liquid Effluent**	**I 3.1-1**
D 3/4.6.14.b	**Gaseous Process and Effluent**	**I 3.1-7**
D 3/4.6.15	**RADIOACTIVE EFFLUENTS**	**I 3.1-14**
D 3/4.6.15.a.(1)	**Liquid Concentration**	**I 3.1-14**
D 3/4.6.15.a.(2)	**Liquid Dose**	**I 3.1-15**
D 3/4.6.15.b.(1)	**Gaseous Dose Rate**	**I 3.1-19**
D 3/4.6.15.b.(2)	**Gaseous Air Dose**	**I 3.1-20**
D 3/4.6.15.b.(3)	**Gaseous Tritium, Iodines and Particulates**	**I 3.1-21**
D 3/4.6.15.d	**Uranium Fuel Cycle**	**I 3.1-24**
D 3/4.6.16	**RADIOACTIVE EFFLUENT TREATMENT SYSTEMS**	**I 3.1-27**
D 3/4.6.16.a	**Liquid**	**I 3.1-27**
D 3/4.6.16.b	**Gaseous**	**I 3.1-27**
D 3/4.6.17	**Not Used**	
D 3/4.6.18	**MARK I CONTAINMENT**	**I 3.1-29**
D 3/4.6.19	**LIQUID WASTE HOLDUP TANKS**	**I 3.1-30**
D 3/4.6.20	**RADIOLOGICAL ENVIRONMENTAL MONITORING PROGRAM**	**I 3.1-31**
D 3/4.6.21	**INTERLABORATORY COMPARISON PROGRAM**	**I 3.1-41**
D 3/4.6.22	**LAND USE CENSUS**	**I 3.1-42**

TABLE OF CONTENTS (Cont)

		PAGE
	BASES	I B 3.1-0
B 3/4.6.14	BASES FOR RADIOACTIVE EFFLUENT INSTRUMENTATION	I B 3.1-1
B 3/4.6.15	BASES FOR RADIOACTIVE EFFLUENTS	I B 3.1-2
	Liquid Concentration	I B 3.1-2
	Liquid Dose	I B 3.1-3
	Gaseous Dose Rate	I B 3.1-4
	Dose-Noble Gases	I B 3.1-5
	Dose-Iodine-131, Iodine-133, Tritium, and Radionuclides in Particulate Form	I B 3.1-6
	Total Dose-Uranium Fuel Cycle	I B 3.1-7
B 3/4.6.16	BASES FOR RADIOACTIVE EFFLUENT TREATMENT SYSTEMS	I B 3.1-8
	Liquid Radwaste Treatment System	I B 3.1-8
	Gaseous Effluent Treatment Systems	I B 3.1-8
B 3/4.6.18	BASES FOR MARK I CONTAINMENT	I B 3.1-9
B 3/4.6.19	BASES FOR LIQUID WASTE HOLDUP TANKS	I B 3.1-9
B 3/4.6.20	BASES FOR RADIOLOGICAL ENVIRONMENTAL MONITORING PROGRAM	I B 3.1-10
B 3/4.6.21	BASES FOR INTERLABORATORY COMPARISON PROGRAM	I B 3.1-11
B 3/4.6.22	BASES FOR LAND USE CENSUS	I B 3.1-12
SECTION 5.0	Not Used	
SECTION 6.0	ADMINISTRATIVE CONTROLS	I 6.0-1
	Reporting Requirements	I 6.0-2
	Special Reports	I 6.0-4

TABLE OF CONTENTS (Cont)

PAGE

PART II – Calculational Methodologies ..... **II 1**

1.0 LIQUID EFFLUENTS ..... **II 2**

1.1 Setpoint Determinations ..... **II 2**

1.1.1 Basis ..... **II 2**

1.1.2 Service Water System Effluent Line Alarm Setpoint ..... **II 2**

1.1.3 Liquid Radwaste Effluent Line Alarm Setpoint ..... **II 3**

1.1.4 Discussion ..... **II 5**

1.1.4.1 Control of Liquid Effluent Batch Discharges ..... **II 5**

1.1.4.2 Simultaneous Discharges of Radioactive Liquids ..... **II 5**

1.1.4.3 Sample Representativeness ..... **II 5**

1.1.4.4 Liquid Radwaste System Operation ..... **II 6**

1.1.4.5 Service Water System Contamination ..... **II 7**

1.1.4.6 Reactor Building Perimeter Drain Discharges ..... **II 7**

1.2 Liquid Effluent Concentration Calculation ..... **II 7**

1.3 Dose Determinations ..... **II 8**

1.3.1 Maximum Dose Equivalent Pathway ..... **II 8**

1.3.2 Dose Projections – Determination of Need to Operate the Liquid Radwaste Treatment System ..... **II 11**

2.0 GASEOUS EFFLUENTS ..... **II 12**

2.1 Setpoint Determinations ..... **II 12**

2.1.1 Basis ..... **II 12**

2.1.2 Stack Monitor Setpoints ..... **II 12**

2.1.3 Recombiner Discharge (Off Gas) Monitor Setpoints ..... **II 14**

2.1.4 Emergency Condenser Vent Monitor Setpoint ..... **II 15**

TABLE OF CONTENTS (Cont)

PAGE

2.1.5	Discussion	II 15
2.1.5.1	Stack Effluent Monitoring System Description	II 15
2.1.5.2	Stack Sample Flow Path – RAGEMS Auxiliary Sample Point	II 15
2.1.5.3	Stack Sample Flow Path - OGESMS	II 16
2.1.5.4	Sample Frequency/Sample Analysis	II 16
2.1.5.5	I-133 and I-135 Estimates	II 16
2.1.5.6	Gaseous Radwaste Treatment System Operation	II 17
2.2	Dose and Dose Rate Determinations	II 17
2.2.1	Dose Rate	II 18
2.2.1.1	Noble Gases	II 19
2.2.1.2	Tritium, Iodines and Particulates	II 20
2.2.2	Dose	II 22
2.2.2.1	Noble Gas Air Dose	II 22
2.2.2.2	Tritium, Iodines and Particulates	II 23
2.2.2.3	Accumulating Doses	II 24
2.2.3	Dose Projections – Determination of Need to Operate Gaseous Radwaste Treatment System and Ventilation Exhaust Treatment System	II 24
2.3	Critical Receptors	II 25
2.4	Refinement of Offsite Doses Resulting From Emergency Condenser Vent Releases	II 26

TABLE OF CONTENTS (Cont)

			PAGE
3.0	40 CFR 190 REQUIREMENTS		II 27
	3.1	Evaluation of Doses From Liquid Effluents	II 28
	3.2	Evaluation of Doses From Gaseous Effluents	II 29
	3.3	Evaluation of Doses From Direct Radiation	II 30
	3.4	Doses to Members of the Public Within the Site Boundary	II 30
4.0	ENVIRONMENTAL MONITORING PROGRAM		II 33
	4.1	Sampling Stations	II 33
	4.2	Interlaboratory Comparison Program	II 33
	4.3	Capabilities for Thermoluminescent Dosimeters Used for Environmental Measurements	II 34
Appendix A	Liquid Dose Factor Derivation (A_{iat})		II 75
Appendix B	Plume Shine Dose Factor Derivation (B_i and V_i)		II 78
Appendix C	Organ Dose Parameters for Iodine - 131 & 133, Particulates and Tritium (R_i)		II 82
Appendix D	Diagrams of Radioactive Liquid and Gaseous Effluent Treatment Systems and Monitoring Systems		II 92

LIST OF TABLES

PART I – Radiological Effluent Controls

		PAGE
D 3.6.14-1	Radioactive Liquid Effluent Monitoring Instrumentation	I 3.1-3
D 4.6.14-1	Radioactive Liquid Effluent Monitoring Instrumentation – SR	I 3.1-5
D 3.6.14-2	Radioactive Gaseous Process and Effluent Monitoring Instrumentation	I 3.1-8
D 4.6.14-2	Radioactive Gaseous Process and Effluent Monitoring Instrumentation - SR	I 3.1-12
D 4.6.15-1	Radioactive Liquid Waste Sampling and Analysis Program – SR	I 3.1-16
D 4.6.15-2	Radioactive Gaseous Waste Sampling and Analysis Program – SR	I 3.1-22
D 3.6.20-1	Operational Radiological Environmental Monitoring Program	I 3.1-34
D 4.6.20-1	Detection Capabilities for Environmental Sample Analysis Lower Limit of Detection LLD – SR	I 3.1-38
D 6.9.3-1	Reporting Level for Radioactivity Concentration in Environmental Samples	I 6.0-5

PART II – Calculational Methodologies

Table 1-1	Average Energy Per Disintegration	II 36
Tables 2-1 to 2-8	A_{iat} Values for the NMP-1 Facility	II 37
Table 3-1	Critical Receptor Dispersion Parameters for Ground Level and Elevated Releases	II 45
Table 3-2	Gamma Air and Whole Body Plume Shine Dose Factors for Noble Gases (B_i and V_i)	II 46
Table 3-3	Immersion Dose Factors for Noble Gases	II 47
Tables 3-4 to 3-22	Dose and Dose Rate Factors (R_i)	II 48
Table 3-23	Parameters for the Evaluation of Doses to Real Members of the Public from Gaseous and Liquid Effluents	II 67
Table 5.1	Nine Mile Point Nuclear Station Radiological Environmental Monitoring Program Sampling Locations	II 68

LIST OF FIGURES

		PAGE
Figure 5.1-1	Nine Mile Point On-Site Map	II 72
Figure 5.1-2	Nine Mile Point Offsite Map	II 73
Figure 5.1.3-1	Site Boundaries	II 74
Figure D-0	Piping Instrument and Equipment Symbols	D-0
Figure D-1	Radioactive Waste Disposal	D-1
Figure D-2	Stm Packing, Exhauster, and Recombiner	D-2
Figure D-3	Reactor Building Vent System	D-3
Figure D-4	Waste Disposal Building Vent System	D-4
Figure D-5	NMP-1 Stack	D-5
Figure D-6	Offgas Building Vent System	D-6
Figure D-7	This Page/Figure Deleted	
Figure D-8	Stack Sample and Sample Return	D-8
Figures D-9, D-10	These Pages/Figures Deleted	
Figure D-11	OGESMS Schematic	D-11

INTRODUCTION

The Offsite Dose Calculation Manual (ODCM) provides the methodology to be used for demonstrating compliance with 10 CFR 20, 10 CFR 50, and 40 CFR 190. The contents of the ODCM are based on Draft NUREG-0472, Revision 3, "Standard Radiological Effluent Technical Specifications for Pressurized Water Reactors," September 1982; Draft NUREG-0473, Revision 2, "Radiological Effluent Technical Specifications for BWR's", July 1979; NUREG 0133, "Preparation of Radiological Effluent Technical Specifications for Nuclear Power Plants," October 1978; the several Regulatory Guides referenced in these documents; and, communication with the NRC staff.

Should it be necessary to revise the ODCM, these revisions will be made in accordance with Technical Specifications.

The Offsite Dose Calculation Manual (ODCM) is a supporting document of the Technical Specifications Section 6.5.1, "Offsite Dose Calculation Manual." The previous Limiting Conditions for Operation that were contained in the Radiological Effluent Technical Specifications are now transferred to the ODCM as Radiological Effluent Controls. The ODCM contains two parts: Radiological Effluent Controls Part I; and Calculational Methodologies, Part II. Radiological Effluent Controls, Part I, includes the following: (1) The Radioactive Effluent Controls and Radiological Environmental Monitoring Programs required by Technical Specifications 6.5.3, "Radioactive Effluent Controls Program" and 6.5.1, "Offsite Dose Calculation Manual", respectively, and (2) descriptions of the information that should be included in the Annual Radiological Environmental Operating and Radioactive Effluent Release Reports required by Technical Specifications 6.6.2, "Annual Radiological Environmental Operating Report" and 6.6.3 "Radioactive Effluent Release Report". Calculational Methodologies, Part II, describes methodology and parameters to be used in the calculation of liquid and gaseous effluent monitoring instrumentation alarm/trip setpoints and the calculation of offsite doses due to radioactive liquid and gaseous effluents. The ODCM also contains a list and graphical description of the specific sample locations for the radiological environmental monitoring program, and liquid and gaseous radwaste treatment system configurations.

PART I – RADIOLOGICAL EFFLUENT CONTROLS

PART I – RADIOLOGICAL EFFLUENT CONTROLS

Section 1.0 Definitions

***NOTE*:**

Technical Specifications defined terms and the following additional defined terms are applicable throughout these controls and bases.

Functional (Functionality)

Functionality is an attribute of Structures, Systems, or Components (SSCs) that is not controlled by Technical Specifications. An SSC shall be functional or have functionality when it is capable of performing its specified function as set forth in the Current Licensing Basis (CLB). Functionality does not apply to specified safety functions, but does apply to the ability of non-Technical Specifications SSCs to perform specified support functions.

Gaseous Radwaste Treatment System

A gaseous radwaste treatment system is any system designed and installed to reduce radioactive gaseous effluents by collecting main condenser offgas and providing for delay or holdup for the purpose of reducing the total radioactivity prior to release to the environment.

Member(s) of the Public

Member(s) of the public shall include persons who are not occupationally associated with the Nine Mile Point Nuclear Station. This category does not include employees of owners and operators of Nine Mile Point Nuclear Station and James A. Fitzpatrick Nuclear Power Plant, their contractors or vendors who are occupationally associated with Nine Mile Point Unit 1. Also excluded from this category are persons who enter the site to service equipment or to make deliveries. This category does include persons who use portions of the site for recreational, occupational, or other purposes not associated with Nine Mile Point Unit 1.

Milk Sampling Location

A milk sampling location is that location where 10 or more head of milk animals are available for the collection of milk samples.

Offsite Dose Calculation Manual (ODCM)

The Offsite Dose Calculation Manual shall contain the current methodology and parameters used in the calculation of offsite doses due to radioactive gaseous and liquid effluents, in the calculation of gaseous and liquid effluent monitoring alarm/trip setpoints, and in the conduct of the environmental radiological monitoring program. The ODCM shall also contain the radioactive effluent controls and radiological environmental monitoring activities, and descriptions of the information that should be included in the Annual Radiological Environmental Operating and Radioactive Effluent Release Reports required by Technical Specifications 6.6.2, "Annual Radiological Environmental Operating Report" and 6.6.3, "Radioactive Effluent Release Report", and Controls D 6.9.1.d and D 6.9.1.e.

Purge – Purging
Purge or purging is the controlled process of discharging air or gas from a confinement to maintain temperature, pressure, humidity, concentration, or other operating condition, in such a manner that replacement air or gas is required to purify the confinement. The purge is completed when the oxygen concentration exceeds 19.5 percent.

Site Boundary

The site boundary shall be that line around the Nine Mile Point Nuclear Station beyond which the land is neither owned, leased, nor otherwise controlled by the owners and operators of Nine Mile Point Nuclear Station and James A. Fitzpatrick Nuclear Power Plant.

Source Check

A source check shall be the qualitative assessment of channel response when the channel sensor is exposed to a source of increased radioactivity.

Unrestricted Area

The unrestricted area shall be any area at or beyond the site boundary access to which is not controlled by the owners and operators of Nine Mile Point Nuclear Station and James A. Fitzpatrick Nuclear Power Plant for purposes of protection of individuals from exposure to radiation and radioactive materials, or any area within the site boundary used for residential quarters or for industrial, commercial, institutional, and/or recreational purposes. That area outside the restricted area (10 CFR 20.1003) but within the site boundary will be controlled by the owner as required.

Ventilation Exhaust Treatment System

A ventilation exhaust treatment system is any system designed and installed to reduce gaseous radioiodine or radioactive material in particulate form in effluents by passing ventilation or vent exhaust gases through charcoal adsorbers and/or HEPA filters for the purpose of removing iodines or particulates from the gaseous exhaust stream prior to the release to the environment. Such a system is not considered to have any effect on noble gas effluents. Engineered Safety Feature (ESF) atmospheric cleanup systems are not considered to be ventilation exhaust treatment system components.

Venting

Venting is the controlled process of discharging air or gas from a confinement to maintain temperature, pressure, humidity, concentration, or other operating condition, in such a manner that replacement air or gas is not provided or required during venting. Vent, used in system names, does not imply a venting process.

PART I – RADIOLOGICAL EFFLUENT CONTROLS

Sections 3.0/4.0 Applicability

3.0 CONTROLS

The Offsite Dose Calculation Manual (ODCM) Part I, Radiological Effluent Controls, is subject to Technical Specifications Section 3.0 requirements, as applicable.

4.0 SURVEILLANCE REQUIREMENTS

The ODCM Part I, Radiological Effluent Controls, is subject to Technical Specifications Section 4.0 requirements, as applicable.

CONTROLS

DLCO 3.6.14 RADIOACTIVE EFFLUENT INSTRUMENTATION

Applicability:

Applies to the functionality of plant instrumentation that monitors plant effluents.

Objective:

To assure the functionality of instrumentation to monitor the release of radioactive plant effluents.

Specification:

a. Liquid Effluent

The radioactive liquid effluent monitoring instrumentation channels shown in Table D 3.6.14-1 shall be functional with their alarm setpoints set to ensure that the limits of Control DLCO 3.6.15.a.1 are not exceeded. The alarm setpoints of these channels shall be determined and adjusted in accordance with the methodology and parameters in Part II.

With a radioactive liquid effluent monitoring instrumentation channel alarm setpoint less conservative than a value which will ensure that the limits of DLCO 3.6.15.a.1 are met, immediately suspend the release of radioactive liquid effluents monitored by the affected channel, or declare the channel nonfunctional, or change the setpoint so it is acceptably conservative.

SURVEILLANCE REQUIREMENT

DSR 4.6.14 RADIOACTIVE EFFLUENT INSTRUMENTATION

Applicability:

Applies to the surveillance of instrumentation that monitors plant effluents.

Objective:
To verify operation of monitoring instrumentation.

Specification:

a. Liquid Effluent

Each radioactive liquid effluent monitoring instrumentation channel shall be demonstrated functional by performance of the sensor check, source check, instrument channel calibration and channel test operations at the frequencies shown in Table D 4.6.14-1.

Records – Auditable records shall be maintained, in accordance with procedures in Part II, of all radioactive liquid effluent monitoring instrumentation alarm setpoints. Setpoints and setpoint calculations shall be available for review to ensure that the limits of Control DLCO 3.6.15.a.1 are met.

CONTROLS	SURVEILLANCE REQUIREMENT
With less than the minimum number of radioactive liquid effluent monitoring instrumentation channels functional, take the action shown in Table D 3.6.14-1. Restore the instruments to functional status within 30 days, or outline in the next Radioactive Effluent Release Report the cause of the nonfunctionality and how the instruments were or will be restored to functional status.	

TABLE D 3.6.14-1
RADIOACTIVE LIQUID EFFLUENT MONITORING INSTRUMENTATION

Instrument	Minimum Channels Functional	Applicability
1. Gross Radioactivity Monitors[a]		
A. Liquid Radwaste Effluent Line	1[c]	At all times[b]
B. Service Water System Effluent Line	1[d]	At all times[i]
2. Flow Rate Measurement Devices		
A. Liquid Radwaste Effluent Line	1[e]	At all times
B. Discharge Canal	**	**
3. Tank Level Indicating Devices[g]		
A. Outside Liquid Radwaste Storage Tanks	1[f]	At all times

**Pumps curves or rated capacity will be utilized to estimate flow.

NOTES FOR TABLE D 3.6.14-1

(a) Provide alarm, but do not provide automatic termination of release.

(b) An operator shall be present in the Radwaste Control Room at all times during a release.

(c) With the number of channels functional less than required by the minimum channels functional requirement, effluent releases may continue provided that prior to initiating a release:

1. At least two independent samples are analyzed in accordance with Specification DSR 4.6.15.a, and

2. At least two technically qualified members of the Facility Staff independently verify the release rate calculations and discharge line valving.

Otherwise suspend release of radioactive effluents via this pathway.

(d) With the number of channels functional less than required by the minimum channels functional requirement, effluent releases via this pathway may continue provided that, at least once per 12 hours, grab samples are collected and analyzed for gamma radioactivity at a lower limit of detection of at least $5x10^{-7}$ microcurie/ml.

(e) During discharge, with the number of channels functional less than required by the minimum channels functional requirement, effluent releases via this pathway may continue provided the flow rate is estimated at least once per 4 hours during actual releases.

(f) With the number of channels functional less than required by the minimum channels functional requirement, liquid additions to this tank may continue provided the tank liquid level is estimated during liquid additions to the tank.

(g) Tanks included in this specification are those outdoor tanks that are not surrounded by liners, dikes or walls capable of holding the tank contents.

(h) Deleted.

(i) Monitoring will be conducted continuously by alternately sampling the reactor building and turbine building service water return lines for approximately 15-minute intervals.

TABLE D 4.6.14-1
RADIOACTIVE LIQUID EFFLUENT MONITORING INSTRUMENTATION
Surveillance Requirement

Instrument	Sensor Check	Source Check[f]	Channel Test	Channel Calibration
1. Gross Beta or Gamma Radioactivity Monitors				
a. Liquid Radwaste Effluent Line	Once/day*	Once/discharge*	Once/3 months[a]*	Once/year[b]*
b. Service Water Effluent Line	Once/day	Once/92 days	Once/184 days[a]	Once/24 months[b]
2. Flow Rate Measurement Devices				
a. Liquid Radwaste Effluent Line	Once/day[c]	None	None	Once/24 months*
b. Discharge Canal[d]	None	None	None	Once/year
3. Tank Level Indicating Devices[e]				
a. Outside Liquid Radwaste Storage Tanks	Once/day**	None	Once/3 months	Once/18 months

* Required prior to removal of blank flange in discharge line and until blank flange is replaced.
** During liquid addition to the tank.

NOTES FOR TABLE D 4.6.14-1

(a) The channel test shall also demonstrate that control room alarm annunciation occurs if any of the following conditions exist:

1. Instrumentation indicates measured levels above the alarm setpoint.
2. Instrument indicates a downscale failure.
3. Instrument controls not set in operate mode.

(b) The channel calibration shall be performed using one or more reference standards certified by the National Institute of Standards and Technology (NIST), or using standards that are traceable to the NIST or using actual samples of liquid waste that have been analyzed on a system that has been calibrated with NIST traceable sources. These standards shall permit calibrating the system over its intended range of energy and measurement.

(c) Sensor check shall consist of verifying indication of flow during periods of release. Sensor check shall be made at least once per 24 hours on days on which continuous, periodic or batch releases are made.

(d) Pump performance curves or rated data may be used to estimate flow.

(e) Tanks included in this specification are those outdoor tanks that are not surrounded by liners, dikes or walls capable of holding the tank contents.

(f) Source check may consist of an installed check source, response to an external source, or (for liquid radwaste monitors) verification within 30 minutes of commencing discharge of monitor response to effluent.

CONTROLS	SURVEILLANCE REQUIREMENT
b. Gaseous Process and Effluent The radioactive gaseous process and effluent monitoring instrumentation channels shown in Table D 3.6.14-2 shall be functional. The Offgas process monitor alarm setpoint shall be set to ensure that the limits of Technical Specification 3.6.15 are not exceeded. The Effluent monitor alarm setpoints shall be set to ensure that the limits of Control DLCO 3.6.15.b.1 are not exceeded. The alarm setpoints of these channels shall be determined and adjusted in accordance with the methodology and parameters in Part II. With a radioactive gaseous process and effluent monitoring instrumentation channel alarm setpoint less conservative than required by the above specification, immediately suspend the release of radioactive gaseous effluents monitored by the affected channel, or declare the channel nonfunctional, or change the setpoint so it is acceptably conservative. With less than the minimum number of radioactive gaseous process and effluent monitoring instrumentation channels functional, take the action shown in Table D 3.6.14-2. Restore the instruments to functional status within 30 days or outline in the next Radioactive Effluent Release Report the cause of the nonfunctionality and how the instruments were or will be restored to functional status.	b. Gaseous Process and Effluent Each radioactive gaseous process and effluent monitoring instrumentation channel shall be demonstrated functional by performance of the sensor check, source check, instrument channel calibration and instrument channel test operations at the frequencies shown in Table D 4.6.14-2. Auditable records shall be maintained of the calculations made, in accordance with procedures in Part II, of radioactive gaseous process and effluent monitoring instrumentation alarm setpoints. Setpoints and setpoint calculations shall be available for review to ensure that the limits of Control DLCO 3.6.15.b.1 are met.

TABLE D 3.6.14-2
RADIOACTIVE GASEOUS PROCESS AND EFFLUENT MONITORING INSTRUMENTATION

Instrument	Minimum Channels Functional	Applicability	Action
1. Stack Effluent Monitoring			
a. Noble Gas Activity Monitors			
(1) High Range	2	*	(a)
(2) Low Range	1	*	(i)
b. Iodine Sampler Cartridge	1	*	(b)
c. Particulate Sampler Filter	1	*	(b)
d. Sampler Flow Rate Measuring Device	1	*	(c)
e. Stack Gas Flow Rate Measuring Device	1	*	(c), (d)
2. Deleted			

* At all times.
** Note Deleted.

TABLE D 3.6.14-2 (cont'd)
RADIOACTIVE GASEOUS PROCESS AND EFFLUENT MONITORING INSTRUMENTATION

Instrument	Minimum Channels Functional	Applicability	Action
3. Condenser Air Ejector Process Monitor (Offgas System Recombiner Discharge)			
a. Noble Gas Activity Monitor	2	***	(g)
b. Offgas System Flow Rate Measuring Device	1	***	(c)
4. Emergency Condenser System Effluent			(h)
a. Noble Gas Activity Monitor	1 per vent	****	

*** During operation of the main condenser air ejector

**** During power operating conditions and whenever the reactor coolant temperature is greater than 212°F except for hydrostatic testing with the reactor not critical.

NOTES FOR TABLE D 3.6.14-2

(a) (1) With the number of channels functional 1 less than required by the minimum channels functional requirement, effluent releases via this pathway may continue provided:

(a) The nonfunctional channel is placed in the tripped condition,
OR
(b) Vent and Purge valves are closed and administratively controlled,
OR
(c) Primary containment integrity is not required.

(2) With the number of channels functional 2 less than required by the minimum channels functional requirement, effluent releases via this pathway may continue provided grab samples are taken once per 12 hours and these samples are analyzed for gross activity within 24 hours.

(b) With the number of channels functional less than required by the minimum channels functional requirements, effluent releases via this pathway may continue provided that samples are continuously collected with auxiliary sampling equipment starting within 8 hours of discovery in accordance with the requirements of Table D 4.6.15-2. When OGESMS and the auxiliary sampling equipment are both non-functional, Attachment 3 of Chemistry procedure N1-CSP-V304 may be used for obtaining continuous particulate and iodine samples.

(c) With the number of channels functional less than required by the minimum channels functional requirements, effluent releases via this pathway may continue provided the flow rate is estimated once per 8 hours.

(d) Stack gas flow rate may be estimated by exhaust fan operating configuration.

(e) Deleted

(f) Deleted

(g) (1) With the number of channels functional 1 less than required by the minimum channels functional requirement, gases from the main condenser offgas treatment system may be released provided:

(a) The nonfunctional channel is placed in the tripped condition,
OR
(b) At least one Stack monitor is functional,

Otherwise be in at least hot shutdown within 12 hours.

NOTES FOR TABLE D 3.6.14-2 (cont'd)

(2) With the number of channels functional 2 less than required by the minimum channels functional requirement, gases from the main condenser offgas treatment system may be released provided:

(a) Offgas grab samples are collected and analyzed once per 12 hours,
AND
(b) At least one Stack monitor is functional,

Otherwise be in at least hot shutdown within 12 hours.

(h) With the number of channels functional less than required by the minimum channels functional requirements, steam release via this pathway may commence or continue provided vent pipe radiation dose rates are monitored once per four hours.

(i) With the number of channels functional less than required by the minimum channels functional requirement, effluent releases via this pathway may continue provided grab samples are taken once per 12 hours and these samples are analyzed for gross activity within 24 hours.

TABLE D 4.6.14-2
RADIOACTIVE GASEOUS PROCESS AND EFFLUENT MONITORING INSTRUMENTATION

Surveillance Requirements

Instrument	Sensor Check	Source Check	Channel Test	Channel Calibration
1. Stack Effluent Monitoring System				
a. Noble Gas Activity Monitors (High Range and Low Range)	Once/day[a]	Once/92 days	Once/184 days[g]	Once/24 months[b]
b. Iodine Sampler Cartridge	None	None	None	None
c. Particulate Sampler Filter	None	None	None	None
d. Sampler Flow Rate Measuring Device	Once/day[a]	None	None	Once/24 months
e. Stack Gas Flow Rate Measuring Device	Once/day	None	None	Once/24 months
2. Deleted				
3. Condenser Air Ejector Process Monitor (Offgas System Recombiner Discharge)				
a. Noble Gas Activity Monitor	Once/day[f]	Once/92 days	Once/24 months[c]	Once/24 months[b]
b. Offgas System Flow Rate Measuring Device	Once/day[f]	None	None	Once/24 months
4. Emergency Condenser System Effluent	Once/day[h]	Once/92 days	Once184 days[g]	Once/24 months[b]
a. Noble Gas Activity Monitor				

NOTES FOR TABLE D 4.6.14-2

(a) At all times.

(b) The channel calibration shall be performed using one or more of the reference standards certified by the National Institute of Standards and Technology (NIST), standards that are traceable to the NIST or using actual samples of gaseous effluent that have been analyzed on a system that has been calibrated with NIST traceable sources. These standards shall permit calibrating the system over its intended range of energy and measurement.

(c) The channel function test shall demonstrate that control room alarm annunciation occurs if either of the following conditions exist:

1) Instrument indicates measured levels above the Hi or Hi Hi alarm setpoint.

2) Instrument indicates a downscale failure.

The channel function test shall also demonstrate that automatic isolation of this pathway occurs if either of the following conditions exist:

1) Instruments indicate two channels above Hi Hi alarm setpoint.

2) Instruments indicate one channel above Hi Hi alarm setpoint and one channel downscale.

(d) Deleted

(e) Deleted

(f) During operation of the main condenser air ejector.

(g) The channel test shall produce upscale and downscale annunciation.

(h) During power operating conditions and whenever the reactor coolant temperature is greater than 212°F except for hydrostatic testing with the reactor not critical.

CONTROLS

DLCO 3.6.15 RADIOACTIVE EFFLUENTS

Applicability:

Applies to the radioactive effluents from the station.

Objective:

To assure that radioactive material is not released to the environment in any uncontrolled manner and is within the limits of 10CFR20 and 10CFR50 Appendix I.

Specification:

a. Liquid

(1) Concentration

The concentration of radioactive material released in liquid effluents to unrestricted areas shall be limited to ten times the concentrations specified in 10CFR Part 20, Appendix B, Table 2, Column 2 for radionuclides other than dissolved or entrained noble gases. For dissolved or entrained noble gases, the concentration shall be limited to 2×10^{-4} microcuries/ml total activity.

Should the concentration of radioactive material released in liquid effluents to unrestricted areas exceed the above limits, restore the concentration to within the above limits immediately.

SURVEILLANCE REQUIREMENT

DSR 4.6.15 RADIOACTIVE EFFLUENTS

Applicability:

Applies to the periodic test and recording requirements of the station process effluents.

Objective:

To ascertain that radioactive effluents from the station are within the allowable values of 10CFR20, Appendix B and 10CFR50, Appendix I.

Specification:

a. Liquid

(1) Concentration

Radioactive liquid wastes shall be sampled and analyzed according to the sampling and analysis program of Table D 4.6.15-1.

The results of the radioactivity analyses shall be used in accordance with the methodology and parameters in Part II to assure that the concentrations at the point of release are maintained within the limits of Control DLCO 3.6.15.a.(1).

CONTROLS

(2) Dose

The dose or dose commitment to a member of the public from radioactive materials in liquid effluents released, from each reactor unit, to unrestricted areas (see Figures 5.1-1) shall be limited:

(a) During any calendar quarter to less than or equal to 1.5 mrems to the total body and to less than or equal to 5 mrems to any organ, and

(b) During any calendar year to less than or equal to 3 mrems to the total body and to less than or equal to 10 mrems to any organ.

With the calculated dose from the release of radioactive materials in liquid effluents exceeding any of the above limits, prepare and submit to the Commission within 30 days, pursuant to Control D 6.9.3, a Special Report that identifies the cause(s) for exceeding the limit(s) and defines the corrective actions that have been taken to reduce the releases and the proposed corrective actions to be taken to assure that subsequent releases will be in compliance with the above limits.

SURVEILLANCE REQUIREMENT

(2) Dose

Cumulative dose contributions from liquid effluents for the current calendar quarter and the current calendar year shall be determined in accordance with the methodology and parameters in Part II monthly.

TABLE D 4.6.15-1
RADIOACTIVE LIQUID WASTE SAMPLING AND ANALYSIS PROGRAM
Surveillance Requirement

Liquid Release Type	Sampling Frequency	Minimum Analysis Frequency	Type of Activity Analysis	Lower Limit[a] of Detection (LLD) (μCi/ml)
A. Batch Waste[b] Tanks	* Each Batch	* Each Batch	Principal Gamma[c] Emitters I-131	5×10^{-7} 1×10^{-6}
	* Each Batch[d]	* Each Batch[d]	Dissolved and Entrained Gases (Gamma Emitters)	1×10^{-5}
	* Each Batch	Monthly Composite[e]	H-3 Gross Alpha	1×10^{-5} 1×10^{-7}
	* Each Batch	Quarterly Composite[e]	Sr-89, Sr-90 Fe-55	5×10^{-8} 1×10^{-6}
B. Service Water System Effluent	Once/month[f]	Once/month[f]	Principal Gamma[c] Emitters I-131 Dissolved and Entrained Gases H-3 Gross Alpha	5×10^{-7} 1×10^{-6} 1×10^{-5} 1×10^{-5} 1×10^{-7}
	Once/quarter[f]	Once/quarter[f]	Sr-89, Sr-90 Fe-55	5×10^{-8} 1×10^{-6}
C. Reactor Building Perimeter Drain	Once/quarter	Quarterly Composite[e]	Principal Gamma[c] Emitters I-131 H-3 Gross Alpha Sr-89, Sr-90 Fe-55, Ni-63	5×10^{-7} 1×10^{-6} 1×10^{-5} 1×10^{-7} 5×10^{-8} 1×10^{-6}

* Completed prior to each release.

NOTES FOR TABLE D 4.6.15-1

(a) The LLD is defined, for purposes of these specifications, as the smallest concentration of radioactive material in a sample that will yield a net count above system background that will be detected with 95 percent probability with only 5 percent probability of falsely concluding that a blank observation represents a "real" signal. For a particular measurement system which may include radiochemical separation:

$$LLD = \frac{4.66\ S_b}{E \bullet V \bullet 2.22 \times 10^6 \bullet Y \bullet \exp(-\lambda \Delta t)}$$

Where:

LLD is the "a priori" lower limit of detection as defined above, as microcuries per unit mass or volume,

S_b is the standard deviation of the background counting rate or of the counting rate of a blank sample as appropriate, as counts per minute,

E is the counting efficiency, as counts per disintegration,

V is the sample size in units of mass or volume,

2.22×10^6 is the number of disintegrations per minute per microcurie,

Y is the fractional radiochemical yield, when applicable,

λ is the radioactive decay constant for the particular radionuclide, and

Δt for plant effluents is the elapsed time between the midpoint of sample collection and time of counting.

Typical values of E, V, Y and Δt should be used in the calculation.

It should be recognized that the LLD is defined as a before the fact limit representing the capability of a measurement system and not as an after the fact for a particular measurement.

NOTES FOR TABLE D 4.6.15-1

(b) A batch release is the discharge of liquid wastes of a discrete volume. Prior to sampling for analyses, each batch shall be isolated and then thoroughly mixed to assure representative sampling.

(c) The principal gamma emitters for which the LLD specification applies exclusively are the following radionuclides: Mn-54, Fe-59, Co-58, Co-60, Zn-65, Mo-99, Cs-134, Cs-137, Ce-141 and Ce-144. This list does not mean that only these nuclides are to be considered. Other gamma peaks that are identifiable, together with those of the above nuclides, shall also be analyzed and reported in the Radioactive Effluent Release Report.

(d) If more than one batch is released in a calendar month, only one batch need be sampled and analyzed during that month.

(e) A composite sample is one in which the quantity of liquid sampled is proportional to the quantity of liquid waste discharged and in which the method of sampling employed results in a specimen that is representative of the liquids released.

(f) If the alarm setpoint of the service water effluent monitor, as determined by the method presented in Part II, is exceeded, the frequency of sampling shall be increased to daily until the condition no longer exists. Frequency of analysis shall be increased to daily for principal gamma emitters (including dissolved and entrained gases) and an incident composite for H-3, gross alpha, Sr-89, Sr-90 and Fe-55.

CONTROLS

b. Gaseous

(1) Dose Rate

The dose rate due to radioactive materials released in gaseous effluents from the site to areas at or beyond the site boundary shall be limited to the following:

(a) For noble gases: Less than or equal to 500 mrems/year to the whole body and less than or equal to 3000 mrems/year to the skin, and

(b) For iodine-131, iodine-133, tritium and all radionuclides in particulate form with half lives greater than 8 days: Less than or equal to 1500 mrems/year to any organ.

With the dose rate(s) exceeding the above limits, without delay restore the release rate to within the above limits(s).

SURVEILLANCE REQUIREMENT

b. Gaseous

(1) Dose Rate

The dose rate due to noble gases in gaseous effluents shall be determined to be within the limits of Control DLCO 3.6.15 in accordance with the methodology and parameters in Part II.

The dose rate due to iodine-131, iodine-133, tritium and all radionuclides in particulate form with half lives greater than 8 days in gaseous effluents shall be determined to be within the limits of Control DLCO 3.6.15 in accordance with methodology and parameters in Part II by obtaining representative samples and performing analyses in accordance with the sampling and analysis program specified in Table D 4.6.15-2.

CONTROLS	SURVEILLANCE REQUIREMENT
(2) Air Dose The air dose due to noble gases released in gaseous effluents, from each reactor unit, to areas beyond the site boundary shall be limited to the following: (a) During any calendar quarter: Less than or equal to 5 milliroentgen for gamma radiation and less than or equal to 10 mrads for beta radiation and, (b) During any calendar year: Less than or equal to 10 milliroentgen for gamma radiation and less than or equal to 20 mrads for beta radiation. With the calculated air dose from radioactive noble gases in gaseous effluents exceeding any of the above limits, prepare and submit to the Commission within 30 days, pursuant to Control D 6.9.3, a Special Report that identifies the cause(s) for exceeding the limit(s) and defines the corrective actions that have been taken to reduce the releases and the proposed corrective actions to be taken to assure that subsequent releases will be in compliance with the above limits.	(2) Air Dose Cumulative dose contributions for the current calendar quarter and current calendar year for noble gases shall be determined monthly in accordance with the methodology and parameters in Part II.

CONTROLS	SURVEILLANCE REQUIREMENT
(3) Tritium, Iodines and Particulates The dose to a member of the public from iodine-131, iodine-133, tritium and all radionuclides in particulate form with half lives greater than 8 days in gaseous effluents released, from each reactor unit, to areas beyond the site boundary shall be limited to the following: (a) During any calendar quarter: Less than or equal to 7.5 mrems to any organ and, (b) During any calendar year: Less than or equal to 15 mrems to any organ. With the calculated dose from the release of iodine-131, iodine-133, tritium and radionuclides in particulate form with half lives greater than 8 days, in gaseous effluents exceeding any of the above limits, prepare and submit to the Commission within 30 days, pursuant to Control D 6.9.3, a Special Report that identifies the cause(s) for exceeding the limit and defines the corrective actions that have been taken to reduce the releases and the proposed corrective actions to be taken to assure that subsequent releases will be in compliance with the above limits.	(3) Tritium, Iodines and Particulates Cumulative dose contributions for the current calendar quarter and current calendar year for iodine-131, iodine-133, tritium and radionuclides in particulate form with half lives greater than 8 days shall be determined monthly in accordance with the methodology and parameters in Part II.

TABLE D 4.6.15-2
RADIOACTIVE GASEOUS WASTE SAMPLING AND ANALYSIS PROGRAM

Surveillance Requirements

Gaseous Release Type	Sampling Frequency	Minimum Analysis Frequency	Type of Activity Analysis	Lower Limit[a] of Detection (LLD) (μCi/ml)
A. Containment Purge[b]	Each Purge	Prior to each release	Principal Gamma Emitters[c]	1×10^{-4}
	Grab Sample	Each Purge	Principal Gamma Emitters[c]	1×10^{-4}
			H-3	1×10^{-6}
B. Stack	Once/Month[d]	Once/Month[d]	Principal Gamma Emitters[c]	1×10^{-4}
	Once/Month[h]	Once/Month	H-3	1×10^{-6}
C. Stack	Continuous[e]	Once/Week[f] Charcoal Sample	I-131	1×10^{-12}
	Continuous[e]	Once/Week[f] Particulate Sample	Principal Gamma Emitters[c]	1×10^{-11}
	Continuous[e]	Once/Month Composite Particulate Sample	Gross alpha, Sr-89, Sr-90	1×10^{-11}
	Continuous[e]	Noble Gas Monitor	Noble Gases, Gross Gamma or Principal Gamma Emitters[c]	1×10^{-5}[g]

NOTES FOR TABLE D 4.6.15-2

(a) The LLD is defined in notation (a) of Table D 4.6.15-1.

(b) Purge is defined in Section 1.0.

(c) The principal gamma emitters for which the LLD specification applies exclusively are the following radionuclides: Kr-87, Kr-88, Xe-133, Xe-135 and Xe-138 for gaseous emissions and Mn-54, Fe-59, Co-58, Co-60, Zn-65, Mo-99, Cs-134, Cs-137, Ce-141, I-131 and Ce-144 for particulate emissions. This list does not mean that only these nuclides are to be considered. Other gamma peaks that are identifiable, together with those of the above nuclides, shall also be analyzed and reported in the Radioactive Effluent Release Report pursuant to Technical Specification 6.6.3, "Radioactive Effluent Release Report", and Control D 6.9.1.

(d) Sampling and analysis shall also be performed following shutdown, startup or an increase on the recombiner discharge monitor of greater than 50 percent, factoring out increases due to changes in thermal power level or dilution flow; or when the stack release rate is in excess of 1000 μCi/second and steady-state gaseous release rate increases by 50 percent.

(e) The sample flow rate and the stack flow rate shall be known for the time period covered by each dose or dose rate calculation made in accordance with Controls DLCO 3.6.15.b.(1).(b) and DLCO 3.6.15.b.(3).

(f) When the release rate is in excess of 1000 μCi/sec and steady state gaseous release rate increases by 50 percent, the iodine and particulate collection device shall be removed and analyzed to determine the changes in iodine-131 and particulate release rate. The analysis shall be done daily following each change until it is shown that a pattern exists which can be used to predict the release rate; after which it may revert to weekly sampling frequency. When samples collected for 24 hours are analyzed, the corresponding LLD's may be increased by a factor of 10.

(g) When the continuous Noble Gas Monitor is nonfunctional the LLD for noble gas gamma analysis shall be 1×10^{-4} μCi/cc.

(h) Tritium grab samples shall be taken weekly from the station ventilation exhaust (stack) when fuel is offloaded until stable tritium release levels can be demonstrated.

CONTROLS	SURVEILLANCE REQUIREMENT
c. Deleted	c. Main Condenser The radioactivity rate of noble gases at the recombiner discharge shall be continuously monitored in accordance with Table D 3.6.14-2.
d. Uranium Fuel Cycle The annual (calendar year) dose or dose commitment to any member of the public due to releases of radioactivity and to radiation from uranium fuel cycle sources shall be limited to less than or equal to 25 mrems to the whole body or any organ, except the thyroid, which shall be limited to less than or equal to 75 mrems.	d. Uranium Fuel Cycle Cumulative dose contributions from liquid and gaseous effluents shall be determined in accordance with Controls DSR 4.6.15.a.(2), DSR 4.6.15.b.(2) and DSR 4.6.15.b.(3) and in accordance with the methodology and parameters in Part II.

CONTROLS	SURVEILLANCE REQUIREMENT
With the calculated doses from the release of radioactive materials in liquid or gaseous effluents exceeding twice the limits of Controls DLCO 3.6.15.a(2), DLCO 3.6.15.b(2) and DLCO 3.6.15.b(3), calculations shall be made including direct radiation contributions from the reactor units, the Independent Spent Fuel Storage Installation (ISFSI), and from outside storage tanks to determine whether the above listed 40CFR190 limits have been exceeded. If such is the case, prepare and submit to the Commission within 30 days, pursuant to Control D 6.9.3, a Special Report that defines the corrective action to be taken to reduce subsequent releases to prevent recurrence of exceeding the above limits and includes the schedule for achieving conformance with the above limits. This Special Report, as defined in 10 CFR Part 20.2203(a)(4), shall include an analysis that estimates the radiation exposure (dose) to a member of the public from uranium fuel cycle sources, including all effluent pathways and direct radiation, for the calendar year that includes the release(s) covered by this report.	Cumulative dose contributions from direct radiation from the reactor units, ISFSI, and from radwaste storage tanks shall be determined in accordance with the methodology and parameters in Part II. This requirement is applicable only under conditions set forth in Control DLCO 3.6.15.d.

CONTROLS	SURVEILLANCE REQUIREMENT
It shall also describe levels of radiation and concentrations of radioactive material involved, and the cause of the exposure levels or concentrations. If the estimated dose(s) exceeds the above limits, and if the release condition resulting in violation of 40CFR Part 190 has not already been corrected, the Special Report shall include a request for a variance in accordance with the provisions of 40CFR 190. Submittal of the report is considered a timely request and a variance is granted until staff action on the request is complete.	

CONTROLS

DLCO 3.6.16 RADIOACTIVE EFFLUENT TREATMENT SYSTEMS

Applicability:

Applies to the operating status of the liquid and gaseous effluent treatment systems.

Objective:

To assure functionality of the liquid and gaseous effluent treatment system.

Specification:

a. Liquid

The liquid radwaste treatment system shall be used to reduce the radioactive materials in liquid wastes prior to their discharge when the projected dose due to the liquid effluent, from each unit, to the Unrestricted Areas would exceed 0.06 mrem to the total body or 0.2 mrem to any organ for any batch.

b. Gaseous

(1) The Gaseous Radwaste Treatment System shall be functional. The Gaseous Radwaste Treatment System shall be used to reduce radioactive materials in gaseous waste prior to their discharge as necessary to meet the requirements of Control DLCO 3.6.15.

SURVEILLANCE REQUIREMENT

DSR 4.6.16 RADIOACTIVE EFFLUENT TREATMENT SYSTEMS

Applicability:

Applies to the surveillance requirements for the liquid and gaseous effluent treatment systems.

Objective:

To verify functionality of the liquid and gaseous effluent treatment system.

Specification:

a. Liquid

Doses due to liquid releases to unrestricted areas shall be projected prior to the release of each batch of liquid radioactive waste in accordance with the methodology and parameters in Part II.

b. Gaseous

(1) Doses due to gaseous releases to areas at or beyond the site boundary shall be calculated in accordance with the methodology and parameters in Part II.

CONTROLS

With gaseous radwaste from the main condenser air ejector system being discharged without treatment for more than 7 days, prepare and submit to the Commission within 30 days, pursuant to Control D 6.9.3, a Special Report that identifies the nonfunctional equipment and the reason for its nonfunctionality, actions taken to restore the nonfunctional equipment to functional status, and a summary description of those actions taken to prevent a recurrence.

(2) The Ventilation Exhaust Treatment System shall be functional and appropriate portions of this system shall be used to reduce releases of radioactivity when the projected doses in 31 days due to gaseous effluent releases, from each unit, to areas beyond the site boundary would exceed 0.3 mrem to any organ of a member of the public.

With radioactive gaseous waste being discharged without treatment and in excess of the above limit, complete a CR evaluation of the degraded condition within 30 days that identifies the nonfunctional equipment, the reason for the nonfunctionality, and plans and schedule to restore the equipment to functional status.

(2)

NOTE:
Only required to be met when the Ventilation Exhaust Treatment System is not being fully utilized.

Project the doses from the iodine and particulate releases from each unit to areas beyond the Site Boundary at least every 31 days.

CONTROLS

DLCO 3.6.18 MARK I CONTAINMENT

Applicability:

Applies to the venting/purging of the Mark I Containment.

Objective:

To assure that the Mark I Containment is vented/purged so that the limits of Controls DLCO 3.6.15.b(1) and DLCO 3.6.15.b(3) are met.

Specification:

The Mark I Containment drywell shall be vented/ purged through the Emergency Ventilation System unless Controls DLCO 3.6.15.b.(1) and DLCO 3.6.15.b.(3) can be met without use of the Emergency Ventilation System.

If these requirements are not satisfied, suspend all venting/purging of the drywell.

SURVEILLANCE REQUIREMENT

DSR 4.6.18 MARK I CONTAINMENT

Applicability:

Applies to the surveillance requirement for venting and purging of the Mark I Containment when required to be vented/purged through the Emergency Ventilation System.

Objective:

To verify that the Mark I Containment is vented through the Emergency Ventilation System when required.

Specification:

The containment drywell shall be determined to be aligned for venting/purging through the Emergency Ventilation System within four hours prior to start of and at least once per 12 hours during venting/purging of the drywell.

CONTROLS

DLCO 3.6.19 LIQUID WASTE HOLDUP TANKS*

Applicability:

Applies to the quantity of radioactive material that may be stored in an outdoor liquid waste holdup tank.

Objective:

To assure that the quantity of radioactive material stored in outdoor holdup tanks does not exceed a specified level.

Specification:

The quantity of radioactive material contained in an outdoor liquid waste tank shall be limited to less than or equal to 10 curies, excluding tritium and dissolved or entrained noble gases.

With the quantity of radioactive material in any such tank exceeding the above limit, immediately suspend all additions of radioactive material to the tank. Within 48 hours reduce the tank contents to within the limit and describe the events leading to this condition in the next Radioactive Effluent Release Report.

*Tanks included in this Control are those outdoor tanks that are not surrounded by liners, dikes, or walls capable of holding the tank contents and that do not have tank overflows and surrounding area drains connected to the liquid radwaste treatment system.

SURVEILLANCE REQUIREMENT

DSR 4.6.19 LIQUID WASTE HOLDUP TANKS

Applicability:

Applies to the surveillance requirements for outdoor liquid waste holdup tanks.

Objective:

To verify the quantity of radioactive material stored in an outdoor liquid waste holdup tank.

Specification:

The quantity of radioactive material contained in each of the tanks listed in Control DLCO 3.6.19 shall be determined to be within the limit of Control DLCO 3.6.19 by analyzing a representative sample of the tank's contents at least weekly when radioactive materials are being added to the tank.

CONTROLS

DLCO 3.6.20 RADIOLOGICAL ENVIRONMENTAL MONITORING PROGRAM

Applicability:

Applies to radiological samples of station environs.

Objective:

To evaluate the effects of station operations and radioactive effluent releases on the environs and to verify the effectiveness of the controls on radioactive material sources.

Specification:

The radiological environmental monitoring program shall be conducted as specified in Table D 3.6.20-1.

With the radiological environmental monitoring program not being conducted as specified in Table D 3.6.20-1, prepare and submit to the Commission, in the Annual Radiological Environmental Operating Report, a description of the reasons for not conducting the program as required and the plans for preventing a recurrence.

Deviations are permitted from the required sample schedule if samples are unobtainable due to hazardous conditions, seasonal unavailability, theft, uncooperative residents or to malfunction of automatic sampling equipment. In the event of the latter, every effort shall be made to complete corrective action prior to the end of the next sampling period.

SURVEILLANCE REQUIREMENT

DSR 4.6.20 RADIOLOGICAL ENVIRONMENTAL MONITORING PROGRAM

Applicability:

Applies to the periodic sampling and monitoring requirements of the radiological environmental monitoring program.

Objective:

To ascertain what effect station operations and radioactive effluent releases have had upon the environment.

Specification:

The radiological environmental monitoring samples shall be collected pursuant to Table D 3.6.20-1 from the specific locations given in the table and figure(s) in Part II and shall be analyzed pursuant to the requirements of Table D 3.6.20-1 and the detection capabilities required by Table D 4.6.20-1.

CONTROLS	SURVEILLANCE REQUIREMENT
With the level of radioactivity (as the result of plant effluents), in an environmental sampling medium exceeding the reporting levels of Table D 6.9.3-1 when averaged over any calendar quarter, prepare and submit to the Commission within 30 days from the end of the affected calendar quarter a Special Report pursuant to Control D 6.9.3. The Special Report shall identify the cause(s) for exceeding the limit(s) and define the corrective action(s) to be taken to reduce radioactive effluents so that the potential annual dose to a member of the public is less than the calendar year limits of Controls DLCO 3.6.15.a.(2), DLCO 3.6.15.b.(2) and DLCO 3.6.15.b.(3). When more than one of the radionuclides in Table D 6.9.3-1 are detected in the sampling medium, this report shall be submitted if: $\frac{\text{concentration (1)}}{\text{limit level (1)}} + \frac{\text{concentration (2)}}{\text{limit level (2)}} + \ldots\ldots\ldots$ ≥ 1.0 When radionuclides other than those in Table D 6.9.3-1 are detected and are the result of plant effluents, this report shall be submitted if the potential annual dose to an individual is equal to or greater than the calendar year limits of Controls DLCO 3.6.15.a.(2), DLCO 3.6.15.b.(2) and DLCO 3.6.15.b.(3).	

CONTROLS	SURVEILLANCE REQUIREMENT
This report is not required if the measured level of radioactivity was not the result of plant effluents; however, in such an event, the condition shall be reported and described in the Annual Radiological Environmental Operating Report.	
With milk or fruit and/or vegetables no longer available at one or more of the sample locations specified in Table D 3.6.20-1, identify locations for obtaining replacement samples and add them to the radiological environmental monitoring program within 30 days. The specific locations from which samples were unavailable may then be deleted from the monitoring program. Identify the cause of the unavailability of samples and identify the new location(s) for obtaining replacement samples in the next Radioactive Effluent Release Report and also include in the report a revised figure(s) and table for Part II reflecting the new location(s).	

TABLE D 3.6.20-1
OPERATIONAL RADIOLOGICAL ENVIRONMENTAL MONITORING PROGRAM

Exposure Pathway and/or Sample	Number of Samples[a] and Locations	Sampling and Collection Frequency [a]	Type of Analysis and Frequency
Radioiodine & Particulates	Samples from 5 locations: 1) 3 Samples from off-site locations in different sectors of the highest calculated site average D/Q (based on all site licensed reactors) 2) 1 sample from the vicinity of an established year round community having the highest calculated site average D/Q (based on all site licensed reactors) 3) 1 sample from a control location 10-17 miles distant and in a least prevalent wind direction[d]	Continuous sampler operation with sample collection weekly or as required by dust loading, whichever is more frequent	Radioiodine Canisters analyze once/week for I-131. Particulate Samplers Gross beta radioactivity following filter change, [b] composite (by location) for gamma isotopic analysis[c] once per 3 months, (as a minimum)
Direct Radiation[e]	32 stations with two or more dosimeters to be placed as follows: an inner ring of stations in the general area of the site boundary and an outer ring in the 4 to 5 mile range from the site with a station in each land based sector.* The balance of the stations should be placed in special interest areas such as population centers, nearby residences, schools and in 2 or 3 areas to serve as control stations.	Once per 3 months	Gamma dose once per 3 months

* At this distance, 8 wind rose sectors are over Lake Ontario.

TABLE D 3.6.20-1 (Cont)
OPERATIONAL RADIOLOGICAL ENVIRONMENTAL MONITORING PROGRAM

Exposure Pathway and/or Sample	Number of Samples[a] and Locations	Sampling and Collection Frequency [a]	Type of Analysis and Frequency
WATERBORNE			
Surface[f]	1) 1 sample upstream	Composite sample over 1 month period[g]	Gamma isotopic analysis[c] once/month. Composite for once per 3 months tritium analysis.
	2) 1 sample from the site's downstream cooling water intake		
Sediment from Shoreline	1 sample from a downstream area with existing or potential recreational value	Twice per year	Gamma isotopic analysis[c]
INGESTION			
Milk	1) Samples from milk sampling locations in 3 locations within 3.5 miles distance having the highest calculated site average D/Q. If there are none, then 1 sample from milking animals in each of 3 areas 3.5-5.0 miles distant having the highest calculated site average D/Q (based on all site licensed reactors)	Twice per month, April-December (samples will be collected in January-March if I-131 is detected in November and December of the preceding year)	Gamma isotopic[c] and I-131 analysis twice per month when animals are on pasture (April-December); once/month at other times (January-March) if required
	2) 1 sample from a milk sampling location at a control location (9-20 miles distant and in a least prevalent wind direction)[d]		

TABLE D 3.6.20-1 (Cont)
OPERATIONAL RADIOLOGICAL ENVIRONMENTAL MONITORING PROGRAM

Exposure Pathway and/or Sample		Number of Samples[a] and Locations	Sampling and Collection Frequency [a]	Type of Analysis and Frequency
Fish	1)	1 sample each of two commercially or recreationally important species in the vicinity of a plant discharge area.[h]	Twice per year	Gamma isotopic analysis[c] on edible portions twice per year
	2)	1 sample each of the same species from an area at least 5 miles distant from the site.[d]		
Food Products	1)	Samples of three different kinds of broad leaf vegetation (such as vegetables) grown nearest to each of two different off-site locations of highest calculated site average D/Q (based on all licensed site reactors).	Once per year during harvest season	Gamma isotopic[c] analysis of edible portions (isotopic to include I-131 or a separate I-131 analysis may be performed) once during the harvest season
	2)	One sample of each of the similar broad leaf vegetation grown at least 9.3-20 miles distant in a least prevalent wind direction.		

NOTES FOR TABLE D 3.6.20-1

(a) It is recognized that, at times, it may not be possible or practical to obtain samples of the media of choice at the most desired location or time. In these instances, suitable alternative media and locations may be chosen for the particular pathway in question and may be substituted. Actual locations (distance and directions) from the site shall be provided in the Annual Radiological Environmental Operating Report. Highest D/Q locations are based on historical meteorological data for all site licensed reactors.

(b) Particulate sample filters should be analyzed for gross beta 24 hours or more after sampling to allow for radon and thoron daughter decay. If the gross beta activity in air is greater than 10 times a historical yearly mean of control samples, gamma isotopic analysis shall be performed on the individual samples.

(c) Gamma isotopic analysis means the identification and quantification of gamma emitting radionuclides that may be attributable to the effluents from the facility.

(d) The purpose of these samples is to obtain background information. If it is not practical to establish control locations in accordance with the distance and wind direction criteria, other sites, such as historical control locations which provide valid background data may be substituted.

(e) One or more instruments, such as a pressurized ion chamber, for measuring and recording dose rate continuously may be used in place of, or in addition to, integrating dosimeters. For the purpose of this table, a thermoluminescent dosimeter may be considered to be one phosphor and two or more phosphors in a packet may be considered as two or more dosimeters. Film badges shall not be used for measuring direct radiation.

(f) The "upstream sample" should be taken at a distance beyond significant influence of the discharge. The "downstream sample" should be taken in an area beyond but near the mixing zone, if possible.

(g) Composite samples should be collected with equipment (or equivalent) which is capable of collecting an aliquot at time intervals which are very short (e.g. hourly) relative to the compositing period (e.g. monthly) in order to assure obtaining a representative sample.

(h) In the event commercial or recreational important species are not available as a result of three attempts, then other species may be utilized as available.

TABLE D 4.6.20-1
DETECTION CAPABILITIES FOR ENVIRONMENTAL SAMPLE ANALYSIS[a,b]
LOWER LIMIT OF DETECTION LLD[c]
Surveillance Requirement

Analysis	Water[c] (pCi/l)	Airborne Particulate or Gases (pCi/m^3)	Fish (pCi/kg, wet)	Milk (pCi/l)	Food Products (pCi/kg, wet)	Sediment (pCi/kg, dry)
gross beta	4	0.01				
H-3	2000*					
Mn-54	15		130			
Fe-59	30		260			
Co-58, Co-60	15		130			
Zn-65	30		260			
Zr-95, Nb-95	15					
I-131	1* *	0.07		1	60	
Cs-134	15	0.05	130	15	60	150
Cs-137	18	0.06	150	18	80	180
Ba/La-140	15			15		

* If no drinking water pathway exists, a value of 3000 pCi/liter may be used.

* * If no drinking water pathway exists, a value of 15 pCi/liter may be used.

NOTES FOR TABLE D 4.6.20-1

(a) This list does not mean that only these nuclides are to be considered. Other peaks that are identifiable, together with those of the above nuclides, shall also be analyzed and reported in the Annual Radiological Environmental Operating Report pursuant to Technical Specification 6.6.2, "Annual Radiological Environmental Operating Report", and Control D 6.9.1.d.

(b) Required detection capabilities for thermoluminescent dosimeters used for environmental measurements are given in ANSI N.545 (1975), Section 4.3. Allowable exceptions to ANSI N.545 (1975), Section 4.3 are contained in Part II, Section 4.3.

(c) The LLD is defined, for purposes of these specifications, as the smallest concentration of radioactive material in a sample that will yield a net count, above system background, that will be detected with 95 percent probability with only 5 percent probability of falsely concluding that a blank observation represents a "real" signal.

For a particular measurement system, which may include radiochemical separation:

$$LLD = \frac{4.66\ S_b}{E \bullet V \bullet 2.22 \bullet Y \bullet \exp(-\lambda \Delta t)}$$

Where:

LLD is the "a priori" lower limit of detection as defined above, as picocuries per unit mass or volume,

S_b is the standard deviation of the background counting rate or of the counting rate of a blank sample as appropriate, as counts per minute,

E is the counting efficiency, as counts per disintegration,

V is the sample size in units of mass or volume,

2.22 is the number of disintegrations per minute per picocurie,

Y is the fractional radiochemical yield, where applicable,

λ is the radioactive decay constant for the particular radionuclide, and

Δt for environmental samples is the elapsed time between sample collection, or end of the sample collection period and time of counting.

Typical values of E, V, Y and Δt should be used in the calculation.

NOTES FOR TABLE D 4.6.20-1

It should be recognized that the LLD is defined as a before the fact limit representing the capability of a measurement system and not as an after the fact limit for the particular measurement. Analyses shall be performed in such a manner that the stated LLDs will be achieved under routine conditions. Occasionally, background fluctuations, unavoidable small sample sizes, the presence of interfering nuclides or other uncontrollable circumstances may render these LLDs unachievable. In such cases, the contributing factors shall be identified and described in the Annual Radiological Environmental Operating Report pursuant to Technical Specification 6.6.2, "Annual Radiological Environmental Operating Report", and Control D 6.9.1.d.

CONTROLS	SURVEILLANCE REQUIREMENT
DLCO 3.6.21 INTERLABORATORY COMPARISON PROGRAM Applicability: Applies to participation in an interlaboratory comparison program on environmental sample analysis. Objective: To ensure the accuracy of measurements of radioactive material in environmental samples. Specification: Analyses shall be performed on radioactive materials supplied as part of an Interlaboratory Comparison Program which has been approved by the Commission. Participation in this program shall include media for which environmental samples are routinely collected and for which intercomparison samples are available. With analyses not being performed as required above, report the corrective actions taken to prevent a recurrence to the Commission in the Annual Radiological Environmental Operating Report.	DSR 4.6.21 INTERLABORATORY COMPARISON PROGRAM Applicability: Applies to testing the validity of measurements on environmental samples. Objective: To verify the accuracy of measurements on radioactive material in environmental samples. Specification: The Interlaboratory Comparison Program shall be described in Part II. A summary of the results obtained as part of the above required Interlaboratory Comparison Program shall be included in the Annual Radiological Environmental Operating Report. Participants in the EPA Cross Check Program may provide the EPA program code designation in lieu of providing results.

CONTROLS

DLCO 3.6.22 LAND USE CENSUS

Applicability:

Applies to the performance of a land use census in the vicinity of the Nine Mile Point Nuclear Facility.

Objective:

To determine the utilization of land within a distance of three miles from the Facility.

Specification:

A land use census shall be conducted and shall identify within a distance of three miles the location in each of the 16 meteorological sectors the nearest residence and within a distance of three miles the location in each of the 16 meteorological sectors of all milk animals. In lieu of a garden census, specifications for vegetation sampling in Table D 3.6.20-1 shall be followed, including analysis of appropriate controls.

With a land use census identifying a milk animal location(s) that represents a calculated D/Q value greater than the D/Q value currently being used in Control DSR 4.6.15.b.(3), identify the new location(s) in the next Radioactive Effluent Release Report.

SURVEILLANCE REQUIREMENT

DSR 4.6.22 LAND USE CENSUS

Applicability:

Applies to assuring that current land use is known.

Objective:

To verify the appropriateness of the environmental surveillance program.

Specification:

The land use census shall be conducted during the growing season at least once per 12 months using that information that will provide the best results, such as conducting a door-to-door survey, aerial survey or consulting local agriculture authorities. The results of the land use census shall be included in the Annual Radiological Environmental Operating Report.

CONTROLS	SURVEILLANCE REQUIREMENT
If the D/Q value at a new milk sampling location is significantly greater (50%) than the D/Q value at an existing milk sampling location, add the new location to the radiological environmental monitoring program within 30 days. The sampling location(s) excluding the control station location, having the lowest calculated D/Q may be deleted from this monitoring program after October 31 of the year in which this land use census was conducted. Pursuant to Control D 6.9.1.e identify the new location(s) in the next Radioactive Effluent Release Report and also include in the report a revised figure(s) and table for Part II reflecting the new location(s).	

PART I – RADIOLOGICAL EFFLUENT CONTROLS

Bases

BASES FOR DLCO 3.6.14 and DSR 4.6.14 RADIOACTIVE EFFLUENT INSTRUMENTATION

The radioactive liquid and gaseous effluent instrumentation is provided to monitor and control, as applicable, the releases of radioactive materials in liquid and gaseous effluents during actual or potential releases of liquid and gaseous effluents. The alarm/trip setpoints for these instruments shall be calculated and adjusted in accordance with the methodology and parameters in Part II to ensure that the alarm/trip will occur prior to exceeding the limits as described in Technical Specification 6.5.3, "Radioactive Effluent Controls Program".

The alarm/trip setpoint for the Offgas process monitor is limited by Technical Specification 3.6.15. The Objective of that Specification is to assure radioactive material released is within the limits of 10CFR20 and 10CFR50 Appendix I. By doing so, total body exposure to an individual at the exclusion area boundary will not exceed a very small fraction of the limits of 10 CFR 100 in the event this effluent is discharged directly without treatment.

The Offgas Process Monitors and Stack Effluent Monitors are interdependent. The Stack Effluent Monitors provide Effluent Monitoring (which requires a minimum of 1 Low Range and 1 High Range monitor) and Containment Purge and Vent Isolation (which requires 2 High Range monitors). When the Purge and Vent isolation capability is not required (Primary containment not required OR Purge and Vent valves shut and clearance applied), only 1 High Range Monitor and 1 Low Range monitor are required to satisfy the monitoring function. When serving as back-up to the Offgas Monitors (Table D 3.6.14-2 Note g), this function may be satisfied by a single Low Range or High Range monitor because all Stack monitors function in the region of interest due to their design overlap.

The functionality and use of this instrumentation is consistent with the requirements of General Design Criteria 60, 63 and 64 of Appendix A to 10CFR Part 50. The purpose of tank level indicating devices is to assure the detection and control of leaks that if not controlled could potentially result in the transport of radioactive materials to unrestricted areas.

BASES FOR DLCO 3.6.15 AND DSR 4.6.15 RADIOACTIVE EFFLUENTS

Liquid Concentration

This control is provided to ensure that the concentration of radioactive materials released in liquid waste effluents to unrestricted areas will be less than ten times the concentration levels specified in 10CFR Part 20, Appendix B, Table 2, Column 2. This limitation provides additional assurance that the levels of radioactive materials in bodies of water in unrestricted areas will result in exposures within (1) the Section II.A design objectives of Appendix I, 10CFR Part 50, to a member of the public and (2) the limits of 10 CFR 20.1301(e) to the population. The concentration limit for dissolved or entrained noble gases is based upon the assumption that Xe-135 is the controlling radioisotope and its effluent concentration in air (submersion) was converted to an equivalent concentration in water using the methods described in International Commission on Radiological Protection (ICRP) Publication 2.

The required detection capabilities for radioactive materials in liquid waste samples are tabulated in terms of the lower limits of detection (LLDs). Detailed discussion of the LLD and other detection limits can be found in HASL Procedures Manual, HASL-300 (revised annually), Currie, L. A., "Limits for Qualitative Detection and Quantitative Determination - Application to Radiochemistry," Anal. Chem. 40. 586-93 (1968), and Hartwell, J. K., "Detection Limits for Radioanalytical Counting Techniques," Atlantic Richfield Hanford Company Report ARH-SA-215 (June 1975).

Because tritium was identified in the Reactor Building Perimeter Drains, (2012), a non-radioactive system which discharges to the storm drains, the discharge from the Reactor Building Perimeter Drains will be sampled while the sump pumps are running and a composite sample analyzed for radioactivity. The source of the radioactivity has been determined to be discharges from the Emergency Condenser Vents during surveillance testing and actual events. The radioactivity released, dose rates and doses have been, and will continue to be, determined for each release using existing Chemistry Surveillance Procedures and reported in the Radioactive Effluent Release Report (RERR). Because the radioactivity detected in the perimeter drain has already been accounted for in the liquid releases, discharges from the drains will be reported in the RERR as a separate item. Monitoring this pathway is to validate that the radioactivity released via this pathway is equal to or less than the quantity accounted for as released via the Emergency Condenser Vents.

BASES FOR DLCO 3.6.15 AND DSR 4.6.15 RADIOACTIVE EFFLUENTS

Liquid Dose

This control is provided to implement the requirements of Section II.A, III.A and IV.A of Appendix I, 10CFR Part 50. The controls expressed as quarter and annual limits are set at those values found in Section II.A. of Appendix I, in accordance with Section IV.A. The action statements provide the required operating flexibility and at the same time implement the guides set forth in Section IV.A of Appendix I to assure that the releases of radioactive material in liquid effluents to unrestricted areas will be kept "as low as is reasonably achievable." There are no drinking water supplies that can be potentially affected by plant operations. The dose calculation methodology and parameters in Part II implement the requirements in Section III.A of Appendix I that conformance with the guides of Appendix I be shown by calculation procedures based on models and data, such that the actual exposure of a member of the public through appropriate pathways is unlikely to be substantially underestimated. The equations specified in Part II for calculating the doses due to the actual release rates of radioactive materials in liquid effluents are consistent with the methodology provided in Regulatory Guide 1.109, "Calculation of Annual Doses to Man from Routine Releases of Reactor Effluents for the Purpose of Evaluating Compliance with 10CFR Part 50, Appendix I," Revision 1, October 1977 and Regulatory Guide 1.113, "Estimating Aquatic Dispersion of Effluents from Accidental and Routine Reactor Releases for the Purpose of Implementing Appendix I," April 1977.

BASES FOR DLCO 3.6.15 AND DSR 4.6.15 RADIOACTIVE EFFLUENTS

Gaseous Dose Rate

This control is provided to ensure that the dose at any time at or beyond the site boundary from gaseous effluents from all units on the site will be within the annual dose limits of 10CFR Part 20 to unrestricted areas. The annual dose limits are the doses associated with the concentrations of 10CFR Part 20, Appendix B, Table 2, Column 1. These limits provide reasonable assurance that radioactive material discharged in gaseous effluents will not result in the exposure of a member of the public in an unrestricted area, either within or outside the site boundary, to annual average concentrations exceeding the limits specified in Appendix B, Table 2 of 10CFR Part 20 or as governed by 10 CFR 20.1302(c). For members of the public who may at times be within the site boundary, the occupancy of that member of the public will usually be sufficiently low to compensate for any increase in the atmospheric diffusion factor above that for the site boundary. The specified release rate limits restrict, at all times, the corresponding gamma and beta dose rates above background to a member of the public at or beyond the site boundary to less than or equal to 500 mrems/year to the total body or to less than or equal to 3000 mrems/year to the skin. These release rate limits also restrict, at all times, the corresponding thyroid dose rate above background to a child via the inhalation pathway to less than or equal to 1500 mrems/year.

The required detection capabilities for radioactive materials in gaseous waste samples are tabulated in terms of the lower limits of detection (LLDs). Detailed discussion of the LLD and other detection limits can be found in HASL Procedures Manual, HASL-300 (revised annually), Currie, L. A., "Limits for Qualitative Detection and Quantitative Determination - Application to Radiochemistry," Anal. Chem. 40, 586-93 (1968), and Hartwell, J. K., "Detection Limits for Radioanalytical Counting Techniques," Atlantic Richfield Hanford Company Report ARH-SA-215 (June 1975).

BASES FOR DLCO 3.6.15 AND DSR 4.6.15 RADIOACTIVE EFFLUENTS

Dose - Noble Gases

This control is provided to implement the requirements of Sections II.B, III.A and IV.A of Appendix I, 10CFR Part 50. The controls expressed as quarter and annual limits are set at those values found in Section II.B of Appendix I in accordance with the guidance of Section IV.A. The action statements provide the required operating flexibility and at the same time implement the guides set forth in Section IV-A of Appendix I to assure that the releases of radioactive material in gaseous effluents to unrestricted areas will be kept "as low as is reasonably achievable." The Surveillance Requirement implements the requirements in Section III.A of Appendix I that conform with the guides of Appendix I be shown by calculational procedures based on models and data such that the actual exposure of a member of the public through appropriate pathways is unlikely to be substantially underestimated. The dose calculation methodology and parameters established in Part II for calculating the doses due to the actual release rates of radioactive noble gases in gaseous effluents are consistent with the methodology provided in Regulatory Guide 1.109, "Calculation of Annual Doses to Man from Routine Releases of Reactor Effluents for the Purpose of Evaluating Compliance with 10CFR Part 50, Appendix I, "Revision 1, October 1977 and Regulatory Guide 1.111, "Methods for Estimating Atmospheric Transport and Dispersion of Gaseous Effluents in Routine Releases from Light-Water Cooled Reactors," Revision 1, July 1977.

The Offsite Dose Calculation Manual Part II equations provided to determine the air doses beyond the site boundary are based upon the historical average atmospheric conditions.

BASES FOR DLCO 3.6.15 AND DSR 4.6.15 RADIOACTIVE EFFLUENTS

Dose - Iodine-131, Iodine-133, Tritium and Radionuclides in Particulate Form

This control is provided to implement the requirements of Sections II.C, III.A and IV.A of Appendix I, 10CFR Part 50. The controls expressed as quarter and annual limits are set at those values found in Section II.C of Appendix I in accordance with the guidance of Section IV.A. The action statements provide the required operating flexibility and at the same time implement the guides set forth in Section IV.A of Appendix I to assure that the releases of radioactive materials in gaseous effluents to unrestricted areas will be kept "as low as is reasonably achievable." The Part II calculational methods specified in the Surveillance Requirement implements the requirements in Section III.A of Appendix I that conformance with the guides of Appendix I be shown by calculational procedures based on models and data, such that the actual exposure of a member of the public through appropriate pathways is unlikely to be substantially underestimated. The Part II calculational methodology and parameters for calculating the doses due to the actual release rates of the subject materials are consistent with the methodology provided in Regulatory Guide 1.109, "Calculation of Annual Doses to Man from Routine Releases of Reactor Effluents for the Purpose of Evaluating Compliance with 10CFR Part 50, Appendix I," Revision 1, October 1977 and Regulatory Guide 1.111, "Methods for Estimating Atmospheric Transport and Dispersion of Gaseous Effluents in Routine Releases from Light-Water-Cooled Reactors," Revision 1, July 1977. These equations also provide for determining the actual doses based upon the historical average atmospheric conditions. The release rate specifications for iodine-131, iodine-133, tritium and radionuclides in particulate form with half lives greater than 8 days are dependent upon the existing radionuclide pathways to man, in the areas beyond the site boundary. The pathways that were examined in the development of these calculations were: 1) individual inhalation of airborne radionuclides, 2) deposition of radionuclides onto green leafy vegetation with subsequent consumption by man, 3) deposition onto grassy areas where milk animals and meat producing animals graze with consumption of the milk and meat by man and 4) deposition on the ground with subsequent exposure of man.

BASES FOR DLCO 3.6.15 AND DSR 4.6.15 RADIOACTIVE EFFLUENTS

Total Dose - Uranium Fuel Cycle

This control is provided to meet the dose limitations of 40CFR Part 190 that have been incorporated into 10CFR Part 20 by 46FR 18525. The control requires the preparation and submittal of a Special Report whenever the calculated doses from plant generated radioactive effluents and direct radiation exceed 25 mrems to the whole body or any organ, except the thyroid, which shall be limited to less than or equal to 75 mrems. For sites containing up to 4 reactors, it is highly unlikely that the resultant dose to a member of the public will exceed the dose limits of 40CFR Part 190 if the individual reactors remain within twice the dose design objectives of Appendix I and if direct radiation doses from the reactor units, the on-site Independent Spent Fuel Storage Installation (ISFSI), and outside storage tanks are kept small. The Special Report will describe a course of action that should result in the limitation of the annual dose to a member of the public to within the 40CFR Part 190 limits. For the purposes of the Special Report, it may be assumed that the dose commitment to a member of the public from other uranium fuel cycle sources is negligible, with the exception that dose contribution from other nuclear fuel cycle facilities at the same site or within a radius of 8 km must be considered. If the dose to any member of the public is estimated to exceed the requirements of 40CFR Part 190, the Special Report with a request for variance (provided the release conditions resulting in violation of 40CFR Part 190 have not already been corrected), in accordance with the provisions of 40CFR Part 190.11 and 10 CFR Part 20.2203(a)(4) is considered to be a timely request and fulfills the requirements of 40CFR Part 190 until NRC staff action is completed. The variance only relates to the limits of 40CFR Part 190 and does not apply in any way to the other requirements for dose limitation of 10CFR Part 20, as addressed in Controls
DLCO 3.6.15.a.(1) and DLCO 3.6.15.b.(1). An individual is not considered a member of the public during any period in which he/she is engaged in carrying out any operation that is part of the nuclear fuel cycle.

BASES FOR DLCO 3.6.16 AND DSR 4.6.16 RADIOACTIVE EFFLUENT TREATMENT SYSTEMS

Liquid Radwaste Treatment System

The requirement that the appropriate portions of this system be used provides assurance that the releases of radioactive materials in liquid effluents will be kept "as low as is reasonably achievable." This control implements the requirements of 10 CFR Part 50.36a, General Design Criterion 60 of Appendix A to 10 CFR 50 and the design objective given in Section II.D of Appendix I to 10 CFR Part 50. Projected doses are calculated on a batch rather than every 31 days due to the low frequency of releases.

Gaseous Effluent Treatment Systems

The functionality of the Gaseous Radwaste Treatment System and the Ventilation Exhaust Treatment System ensures that the systems will be available for use whenever gaseous effluents require treatment prior to release to the environment. The requirement that appropriate portions of these systems be used, when specified, provides reasonable assurance that the releases of radioactive materials in gaseous effluents will be kept "as low as is reasonably achievable." This control implements the requirements of 10 CFR Part 50.36a, General Design Criterion 60 of Appendix A to 10 CFR 50 and the design objectives given in Section II.D of Appendix I to 10 CFR Part 50. The control governing the use of appropriate portions of the Gaseous Radwaste Treatment System is based on time without treatment rather than dose, due to the wide variability in effluent with changing power conditions. Since the capability exists to operate within specification without use of the Gaseous Radwaste Treatment System, it is conceivable that due to unforeseen circumstances, limited operation without the system may be made sometime during the life of the plant. The control governing the use of appropriate portions of the Ventilation Exhaust Treatment System was specified as a suitable fraction of the dose design objectives set forth in II.C of Appendix I, 10CFR Part 50, for gaseous effluents.

BASES FOR DLCO 3.6.18 AND DSR 4.6.18 MARK I CONTAINMENT

This control provides reasonable assurance that releases from drywell purging operations will not exceed the annual dose limits of 10CFR Part 20 for unrestricted areas.

BASES FOR DLCO 3.6.19 AND DSR 4.6.19 LIQUID HOLDUP TANKS

This control applies to any outdoor tank that is not surrounded by liners, dikes or walls capable of holding the tank contents and that does not have tank overflows and surrounding areas drains connected to the liquid radwaste treatment system.

Restricting the quantity of radioactive material contained in the specified tanks provides assurance that in the event of an uncontrolled release of the tanks' contents, the resulting concentrations would be less than ten times the concentrations of 10CFR Part 20, Appendix B, Table 2, Column 2, at the nearest potable water supply and the nearest surface water supply in an unrestricted area.

BASES FOR DLCO 3.6.20 AND DSR 4.6.20 RADIOLOGICAL ENVIRONMENTAL MONITORING PROGRAM

The radiological environmental monitoring program required by this control provides representative measurements of radiation and of radioactive materials in those exposure pathways and for those radionuclides that lead to the highest potential radiation exposures of members of the public resulting from the station operation. This monitoring program implements Section IV.B.2 of Appendix I to 10CFR Part 50 and thereby supplements the radiological effluent monitoring program by verifying that the measurable concentrations of radioactive materials and levels of radiation are not higher than expected on the basis of the effluent measurements and the modeling of the environmental exposure pathways. Guidance for this monitoring program is provided by the Radiological Assessment Branch Technical Position on Environmental Monitoring. The initially specified monitoring program will be effective for at least the first three years of commercial operation. Following this period, program changes may be initiated based on operational experience.

The required detection capabilities for environmental sample analyses are tabulated in terms of the lower limits of detection (LLDs). The LLDs required by Table D 4.6.20-1 are considered optimum for routine environmental measurements in industrial laboratories. It should be recognized that the LLD is defined as a before the fact limit representing the capability of a measurement system and not as an after the fact limit for a particular measurement.

Detailed discussion of the LLD, and other detection limits, can be found in HASL Procedures Manual, HASL-300 (revised annually), Currie, L.A., "Limits for Qualitative Detection and Quantitative Determination - Application to Radiochemistry," Anal. Chem 40, 586-93 (1968) and Hartwell, J.K., "Detection Limits for Radioanalytical Counting Techniques," Atlantic Richfield Hanford Company Report ARH-SA-215 (June 1975).

BASES FOR DLCO 3.6.21 AND DSR 4.6.21 INTERLABORATORY COMPARISON PROGRAM

The requirement for participation in an approved Interlaboratory Comparison Program is provided to ensure that independent checks on the precision and accuracy of the measurements of radioactive material in environmental sample matrices are performed as part of the quality assurance program for environmental monitoring for the purposes of Section IV.B.2 of Appendix I to 10CFR Part 50.

BASES FOR DLCO 3.6.22 AND DSR 4.6.22 LAND USE CENSUS

This control is provided to ensure that changes in the use of areas at and beyond the site boundary are identified and that modifications to the radiological environmental monitoring program are made if required by the results of this census. The best survey information such as from a door-to-door survey(s), from an aerial survey or from consulting with local agricultural authorities shall be used. This census satisfies the requirements of Section IV.B.3 of Appendix I to 10CFR Part 50.

In lieu of a garden census, the significance of the exposure via the garden pathway can be evaluated by the sampling of vegetation as specified in Table D 3.6.20-1.

A milk sampling location, as defined in Section 1, requires that at least 10 milking cows are present at a designated milk sample location. It has been found from past experience, and as a result of conferring with local farmers, that a minimum of 10 milking cows is necessary to guarantee an adequate supply of milk twice per month for analytical purposes. Locations with less than 10 milking cows are usually utilized for breeding purposes which eliminates a stable supply of milk for samples as a result of suckling calves and periods when the adult animals are dry.

PART I – RADIOLOGICAL EFFLUENT CONTROLS

Section 6.0 Administrative Controls

6.0 ADMINISTRATIVE CONTROLS

The ODCM Specifications are subject to Technical Specification Section 6.6.2, "Annual Radiological Environmental Operating Report," Section 6.6.3, "Radioactive Effluent Release Report," Section 6.5.1, "Offsite Dose Calculation Manual (ODCM)," and Section 6.5.3, "Radioactive Effluent Controls Program."

D 6.9 Reporting Requirements

D 6.9.1.d Annual Radiological Environmental Operating Report

The Annual Radiological Environmental Operating Report shall include a comparison with operational controls as appropriate, and with environmental surveillance reports from the previous 5 years, and an assessment of the observed impacts of the plant operation on the environment. The report shall also include the results of land use censuses required by Control DLCO 3.6.22.

The report shall also include the following: a summary description of the radiological environmental monitoring program; at least two legible maps** covering all sampling locations keyed to a table giving distances and directions from the centerline of one reactor; the results of licensee participation in the Interlaboratory Comparison Program, required by Control DLCO 3.6.21; discussion of all deviations from the sampling schedule of Table D 3.6.20-1; and discussion of all analyses in which the LLD required in Table D 4.6.20-1 was not achievable.

** One map shall cover stations near the site boundary; a second shall include the more distant stations.

D 6.9.1.e Radioactive Effluent Release Report

The Radioactive Effluent Release Report shall include a summary of the quantities of radioactive liquid and gaseous effluents and solid waste releases from the unit as outlined in Regulatory Guide 1.21, "Measuring, Evaluating, and Reporting Radioactivity in Solid Wastes and Releases of Radioactive Materials in Liquid and Gaseous Effluents from Light-Water-Cooled Nuclear Power Plants", Revision 1, June 1974, with data summarized on a quarterly basis following the format of Appendix B thereof.

The Radioactive Effluent Release Report shall include an annual summary of hourly meteorological data collected over the previous year. This annual summary may be either in the form of an hour-by-hour listing on magnetic tape of wind speed, wind direction, atmospheric stability, and precipitation (if measured), or in the form of joint frequency distributions of wind speed, wind direction, and atmospheric stability.* This same report shall include an assessment of the radiation doses from radioactive liquid and gaseous effluents to members of the public due to their activities inside the site boundary (Part II Figure 5.1.3-1) during the reporting period. All assumptions used in making these assessments, i.e., specific activity, exposure time and location, shall be included in these reports. The assessment of radiation doses shall be performed in accordance with the methodology and parameters in Part II.

The Radioactive Effluent Release Report shall also include an assessment of radiation doses to the likely most exposed member of the public from reactor releases and other nearby uranium fuel cycle sources, including doses from primary effluent pathways and direct radiation, for the previous calendar year to show conformance with 40 CFR Part 190, Environmental Radiation Protection Standards for Nuclear Power Operation. Acceptable methods for calculating the doses from liquid and gaseous effluents are given in Part II.

* In lieu of submission with the Radioactive Effluent Release Report, the licensee has the option of retaining this summary of required meteorological data on site in a file that shall be provided to the NRC upon request.

The Radioactive Effluent Release Reports shall include a list of unplanned releases from the site to unrestricted areas of radioactive materials in gaseous and liquid effluents made during the reporting period.

The Radioactive Effluent Release Reports shall include the following information for each class of solid waste (as defined by 10 CFR Part 61) shipped offsite during the report period.

a. Container volume,

b. Total curie quantity (specify whether determined by measurement or estimate),

c. Principal radionuclides (specify whether determined by measurement or estimate),

d. Source of waste and processing employed (e.g., dewatered spent resin, compacted dry waste, evaporator bottoms),

e. Type of container (e.g., LSA, Type A, Type B, Large Quantity), and,

f. Solidification agent or absorbent (e.g., cement)

The Radioactive Effluent Release Reports shall include any changes made during the reporting period to the Process Control Program (PCP) and to the Offsite Dose Calculation Manual (ODCM), as well as a listing of new locations for dose calculations and/or environmental monitoring identified by the land use census pursuant to Control DLCO 3.6.22.

Changes to the Process Control Program (PCP) shall be reported to the Commission in the Radioactive Effluent Release Report for the period in which the change(s) was made. This submittal shall contain:

a. Sufficiently detailed information to totally support the rationale for the change without benefit of additional or supplemental information;

b. A determination that the change did not reduce the overall conformance of the solidified waste product to existing criteria for solid wastes; and

c. Documentation of the fact that the change has been reviewed and found acceptable.

Changes to the Offsite Dose Calculation Manual (ODCM) shall be in accordance with Technical Specification 6.5.1, "Offsite Dose Calculation Manual (ODCM)".

D 6.9.3Special Reports

Special reports shall be submitted in accordance with 10 CFR 50.4 to the Regional Office within the time period specified for each report. These reports shall be submitted covering the activities identified below pursuant to the requirements of the applicable reference specification:

a.
b.
c.
d.
e.
f.
g.

Not applicable to RETS

h. Calculate Dose from Liquid Effluent in Excess of Limits, Control DLCO 3.6.15.a(2) (30 days from the end of the affected calendar quarter).

i. Calculate Air Dose from Noble Gases Effluent in Excess of Limits, Control DLCO 3.6.15.b(2) (30 days from the end of the affected calendar quarter).

j. Calculate Dose from I-131, H-3 and Radioactive Particulates with half lives greater than eight days in Excess of Limits, Control DLCO 3.6.15.b(3)(b) (30 days from the end of the affected calendar quarter).

k. Caculated Doses from Uranium Fuel Cycle Source in Excess of Limits, Control DLCO 3.6.15.d (30 days from the end of the affected calendar year).

l. Nonfunctional Gaseous Radwaste Treatment System, Control DLCO 3.6.16.b (30 days from the end of the affected calendar year).

m. Environmental Radiological Reports. With the level of radioactivity (as the result of plant effluents) in an environmental sampling media exceeding the reporting level of Table D 6.9.3-1, when averaged over any calendar quarter, in lieu of a Licensee Event Report, prepare and submit to the Commission within thirty (30) days from the end of the calendar quarter a special report identifying the cause(s) for exceeding the limits, and define the corrective action to be taken.

Table D 6.9.3-1
REPORTING LEVEL FOR RADIOACTIVITY CONCENTRATIONS IN ENVIRONMENTAL SAMPLES

REPORTING LEVELS

Analysis	Water (pCi/l)	Airborne Particulate or Gases (pCi/m^3)	Fish (pCi/kg, wet)	Milk (pCi/l)	Food Products (pCi/kg, wet)
H-3	20,000*				
Mn-54	1,000		30,000		
Fe-59	400		10,000		
Co-58	1,000		30,000		
Co-60	300		10,000		
Zn-65	300		20,000		
Zr-95, Nb-95	400				
I-131	2 * *	0.9		3	100
Cs-134	30	10.0	1,000	60	1,000
Cs-137	50	20.0	2,000	70	2,000
Ba/La-140	200			300	

* For drinking water samples. This is a 40 CFR 141 value. If no drinking water pathway exists, a value of 30,000 pCi/liter may be used.

** If no drinking water pathway exists, a value of 20 pCi/liter may be used.

PART II – CALCULATION METHODOLOGIES

1.0 LIQUID EFFLUENTS

1.1 Setpoint Determinations

1.1.1 Basis

Monitor setpoints will be established such that the concentration of radionuclides in the liquid effluent releases in the discharge canal shall be limited to ten times the concentrations specified in 10 CFR 20, Appendix B, Table 2, Column 2 for radionuclides other than dissolved or entrained noble gases. For dissolved or entrained noble gases, the concentration shall be limited to 2E-04 μCi/ml total activity. Setpoints for the Service Water System Effluent Line will be calculated quarterly based on the radionuclides identified during the previous year's releases from the liquid radwaste system or the isotopes identified in the most recent radwaste release or other identified probable source. Setpoints for the Liquid Radwaste Effluent Line will be based on the radionuclides identified in each batch of liquid waste prior to its release.

After release, the Liquid Radwaste monitor setpoint may remain as set, or revert back to a setpoint based on a previous Radioactive Effluent Release Report, or install blank flange in the discharge line and declare nonfunctional in accordance with the ODCM Part I.

Since the Service Water System effluent monitor and Liquid Radwaste effluent monitor can only detect gamma radiation, the alarm setpoints are calculated by using the concentration of gamma emitting isotopes only (or the corresponding Maximum Effluent Concentration (MEC) values for the same isotopes, whichever are higher) in the $\Sigma_i(\mu Ci/ml)_{i\gamma}$ expression (Section 1.1.2, 1.1.3).

The Required Dilution Factor (RDF) is calculated using concentrations of all isotopes present (or the corresponding MEC values for the same isotopes, whichever are higher) including tritium and other non-gamma emitters to ensure that all radionuclides in the discharge canal do not exceed Technical Specifications Radioactive Effluent Controls Program limits.

1.1.2 Service Water System Effluent Line Alarm Setpoint

The detailed methods for establishing setpoints for the Service Water System Effluent Line Monitor shall be contained in the Nine Mile Point Station Procedures. These methods shall be in accordance with the following:

The General Setpoint Equation is Setpoint < $\frac{\text{(Conservative Factor) (Concentration)(ADF)(CF)}}{\text{RDF}}$

From the above General Setpoint Equation the Hi and Alert alarms are calculated as follows:

$$\text{Setpoint (Hi alarm)} < 0.9\,\frac{\Sigma_i\,(\mu Ci\,/\,ml)_{i\gamma}(CF)TEDF\;/\;F_{sw}}{\Sigma_i\,[(\mu Ci\,/\,ml)_{iT}\;/\;MEC_i\,]} + \text{background}$$

$$\text{Setpoint (Alert alarm)} < 0.7\,\frac{\Sigma_i\,(\mu Ci\,/\,ml)_{i\gamma}(CF)TEDF\;/\;F_{sw}}{\Sigma_i\,[(\mu Ci\,/\,ml)_{iT}\;/\;MEC_i\,]} + \text{background}$$

$(\mu Ci/ml)_{i\gamma}$= concentration of gamma emitting isotope i in the sample, or the corresponding MEC of gamma emitting isotope i $(MEC)_i$, whichever is higher (units = μCi/ml).

1.1.2 Service Water System Effluent Line Alarm Setpoint (Cont'd)

$(\mu Ci/ml)_{iT}$ = concentration of any radioactive isotope i in the sample including tritium and other non-gamma emitters or corresponding MEC of isotope i, MEC_i, whichever is higher (units = μCi/ml).

TF = Tempering Fraction

TDF = Total Dilution Flow (units = gallons/minute).

TEDF = Total Effective Dilution Flow = TDF (1-TF) (units = gallons/minute)

F_{sw} = Service Water Flow (units = gallons/minute).

CF = Monitor calibration factor (units = net cpm/μCi/ml).

MEC_i = Maximum Effluent Concentration, ten times the Effluent Concentration for radionuclide i as specified in 10 CFR 20, Appendix B, Table 2, Column 2 (units μCi/ml).

Sample = Those nuclides present in the previous batch release from the liquid radwaste effluent system <u>or</u> those nuclides present in the last Radioactive Effluent Release Report (units = μCi/ml) or those nuclides present in the service water system.**

$(MEC)_{i\gamma}$ = same as MEC_i but for gamma emitting nuclides only.

0.9 and 0.7= factors of conservatism to account for inaccuracies.

RDF = Required Dilution Factor, $\sum_i [(\mu Ci/ml)_{iT}/MEC_i]$. If MEC values are used in the $(\mu Ci/ml)_{i\gamma}$, they must also be used in calculating RDF (numerator). RDF= FMEC (See Section II-1.2).

ADF = Actual Dilution Factor, $TEDF/F_{sw}$

** For periods with known reactor water to Reactor Building Closed Loop Cooling (RBCLC) system leakage, RBCLC concentration may be prudently substituted for the above.

1.1.3 Liquid Radwaste Effluent Line Alarm Setpoint

The detailed methods for establishing setpoints for the Liquid Radwaste Effluent Line Monitor shall be contained in the Nine Mile Point Station Procedures. These methods shall be in accordance with the following:

The General Setpoint Equation in Section II-1.1.2 is used to develop the Hi-Hi and Hi alarm setpoints below:

$$\text{Setpoint (Hi-Hi alarm)} < 0.9 \frac{\Sigma_i (\mu Ci / ml)_{i\gamma} (CF) TEDF / F_{re}}{\Sigma_i [(\mu Ci / ml)_{iT} / MEC_i]} + \text{background}$$

1.1.3 Liquid Radwaste Effluent Line Alarm Setpoint (Cont'd)

$$\text{Setpoint (Hi alarm)} < 0.7 \frac{\Sigma_i (\mu Ci / ml)_{i\gamma} (CF) TEDF \ / \ F_{re}}{\Sigma_i \ [(\mu Ci / ml)_{iT} \ / \ MEC_i \ ]} + \text{background}$$

$(\mu Ci/ml)_{i\gamma}$ = concentration of gamma emitting isotope i in the sample or the corresponding MEC of gamma emitting isotope i, $(MEC)_i$ whichever is higher.

$(\mu Ci/ml)_{iT}$ = concentration of any radioactive isotope i in the sample including tritium and other non-gamma emitters or the corresponding MEC of isotope i, MEC_i, whichever is higher. (units = μCi/ml).

TF = Tempering Fraction

TDF = Total Dilution Flow (units = gallons/minute).

TEDF = Total Effective Dilution Flow = TDF (1-TF) (units = gallons/minute)

F_{re} = Radwaste Effluent Flow (units = gallons/minute).

CF = Monitor calibration factor (units = net cps/μCi/ml).

MEC_i = Maximum Effluent Concentration, ten times the Effluent Concentration for radionuclide i as specified in 10 CFR 20, Appendix B, Table 2, Column 2, for those nuclides detected by spectral analysis of the contents of the radwaste tanks to be released. (units = μCi/ml)

$(MEC)_{i\gamma}$ = same as MEC_i but for gamma emitting nuclide only.

0.9 and 0.7 = factors of conservatism to account for inaccuracies.

RDF = Required Dilution Factor, $\sum_i [(\mu Ci/ml)_{iT} / MEC_i]$.
If MEC values are used in the $(\mu Ci/ml)_{i\gamma}$, they must also be used in calculating RDF (numerator).

ADF = Actual Dilution Factor = $TEDF/F_{re}$

Notes:

(a) If $TEDF/F_{re} = \sum_i [(\mu Ci/ml)_{iT} / MEC_i]$ (if ADF = RDF)

the discharge could not be made, since the monitor would be continuously in alarm. To avoid this situation, F_{re} will be reduced (normally by a factor of 2) to allow setting the alarm point at a concentration higher than tank concentration. This will also result in a discharge canal concentration at approximately 50% Maximum Effluent Concentration.

(b) TF is tempering fraction (i.e., diversion of some fraction of discharge flow to the intake canal for the purpose of temperature control).

1.1.4 Discussion

1.1.4.1 Control of Liquid Effluent Batch Discharges

At Nine Mile Point Unit 1 Liquid Radwaste Effluents are released only on a batch mode. To prevent the inadvertent release of any liquid radwaste effluents, radwaste discharge is mechanically isolated (blank flange installed or discharge valve chain-locked closed) following the completion of a batch release or series of batch releases.

This mechanical isolation remains in place and will only be removed prior to the next series of liquid radwaste discharges after all analyses required in station procedures and Table D 4.6.15-1A of Part I are performed and monitor setpoints have been properly adjusted.

1.1.4.2 Simultaneous Discharges of Radioactive Liquids

If during the discharge of any liquid radwaste batch, there is an indication that the service water canal has become contaminated (through a service water monitor alarm or through a grab sample analysis in the event that the service water monitor is nonfunctional) the discharge shall be terminated immediately. The liquid radwaste discharge shall not be continued until the cause of the service water alarm (or high grab sample analysis result) has been determined and the appropriate corrective measures taken to ensure ten times the effluent concentrations specified in 10CFR20, Appendix B, Table 2, Column 2 (Section D 3.6.15.a(1) of Part I) are not exceeded. In accordance with Liquid Waste procedures, controls are in place to preclude a simultaneous release of liquid radwaste batch tanks. In addition, an independent verification of the discharge valve line-up is performed prior to discharge to ensure that simultaneous discharges are prevented.

1.1.4.3 Sampling Representativeness

This section covers Part I Table D 4.6.15-1 Note b concerning thoroughly mixing of each batch of liquid radwaste prior to sampling.

Liquid Radwaste Tanks scheduled for discharge at Nine Mile Point Unit 1 are isolated (i.e. inlet valves marked up) and at least three tank volumes of entrained fluids are recirculated prior to sampling. Minimum recirculation time is calculated as follows:

Minimum Recirculation Time = 3.0(T/R)

Where:
3.0 = Plant established mixing factor, unitless
T = Tank volume, gal
R = Recirculation flow rate, gpm

Additionally, the Hi Alarm setpoint of the Liquid Radwaste Effluent Radiation Monitor is set at a value corresponding to not more than 70% of its calculated response to the grab sample or corresponding MEC values. Thus, this radiation monitor will alarm if the grab sample, or corresponding MEC value, is significantly lower in activity than any part of the tank contents being discharged.

1.1.4.4 Liquid Radwaste System Operation

Part I Section DLCO 3.6.16.a requires that the liquid radwaste system shall be used to reduce the radioactive materials in liquid wastes prior to their discharge, as necessary, to meet the concentration and dose requirements of Section DLCO 3.6.15.

Utilization of the radwaste system will be based on the capability of the indicated components of each process system to process contents of the respective low conductivity and high conductivity collection tanks:

1) Low Conductivity (Equipment Drains): Radwaste Filter and Radwaste Demin. (See Fig. D-1) or modular waste water technology ("THERMEX")

2) High Conductivity (Floor Drains): Waste Evaporator (See Fig. D-1) or modular waste water technology ("THERMEX") directly to the Waste Collector Tank or the Waste Sample Tanks.

Cumulative dose contributions from liquid effluents for the current calendar quarter and the current calendar year shall be determined as described in Section II-1.3 of this manual prior to the release of each batch of liquid waste. This same dose projection of Section II-1.3 will also be performed in the event that untreated liquid waste is discharged, to ensure that the dose limits of Part I DLCO 3.6.15.a(2) are not exceeded. (Thereby implementing the requirements of 10CFR50.36a, General Design Criteria 60 of Appendix A and the Design Objective given in Section II-D of Appendix I to 10 CFR50).

For the purpose of dose projection, the following assumptions shall be made with regard to concentrations of non-gamma emitting radionuclides subsequently analyzed:

a) [H-3] ≤ H-3 Concentration found recent condensate storage tank analysis

b) [Sr-89] ≤ 4 x Cs-137 Concentration

c) [Sr-90] ≤ 0.5 x Cs-137 Concentration

d) [Fe-55] ≤ 1 x Co-60 Concentration

Assumed Scaling Factors used in b, c, and d above represent conservative estimates derived from analysis of historical data from process waste streams. Following receipt of H-3, Sr-89, Sr-90 and Fe-55 analysis information, dose estimates shall be revised using actual radionuclide concentrations and actual tank volumes discharged.

1.1.4.5 Service Water System Contamination

Service water is normally non-radioactive. If contamination is suspected, as indicated by a significant increase in service water effluent monitor response, grab samples will be obtained from the service water discharge lines and a gamma isotopic analysis meeting the LLD requirements of Part I Table D 4.6.15-1 completed. If it is determined that an inadvertent radioactive discharge is occurring from the service water system, then:

a) A 10CFR 50.59 review shall be performed (ref. I&E Bulletin 80-10),

b) daily service water effluent samples shall be taken and analyzed for principal gamma emitters until the release is terminated,

c) an incident composite shall be prepared for H-3, gross alpha, Sr-89, Sr-90 and Fe-55 analyses and,

d) dose projections shall be performed in accordance with Section II-1.3 of this manual (using estimated concentrations for H-3, Sr-89, Sr-90 and Fe-55 to be conservatively determined by supervision at the time of the incident).

Additionally, service water effluent monitor setpoints may be recalculated using the actual distribution of isotopes found from sample analysis.

When contamination is indicated by quantitative non-gamma emitter results, sample and analyze gamma and non-gamma emitters weekly.

1.1.4.6 Reactor Building Perimeter Drain Discharges

The Reactor Building Perimeter Drain became contaminated to detectable levels with tritium, due to discharges from the Emergency Condenser (EC) Vents. This pathway has been evaluated by extensive sampling and analysis. It has been determined that any discharge to the environment via this pathway will be well within regulatory limits. Discharges via this pathway will be monitored by composite sampling and laboratory analysis. The discharges will be tracked and reported annually in the Radioactive Effluent Release Report (RERR). Because the radioactive discharge from the EC Vents are evaluated each time the ECs are actuated and the results reported in the RERR, the activity detected in the perimeter drain discharge will be reported separately from other liquid discharges.

1.2 Liquid Effluent Concentration Calculation

This calculation documents compliance with Part I Section DLCO 3.6.15.a (1).

The concentration of radioactive material released in liquid effluents to unrestricted areas (see Figure 5.1.3-1) shall be limited to ten times the effluent concentrations specified in 10CFR20, Appendix B, Table 2, Column 2, for radionuclides other than dissolved or entrained noble gases. For dissolved or entrained noble gases, the concentration shall be limited to 2 E-4 microcurie/milliliter (μCi/ml) total activity at the point of discharge. For dissolved and entrained noble gases, this limit may also be satisfied by using 2E-4 μCi/ml as the MEC for each noble gas.

The concentration of radioactivity from Liquid Radwaste batch releases and, if applicable, Service Water System and emergency condenser start-up vent discharges are included in the

1.2 Liquid Effluent Concentration Calculation (Cont'd)

calculation. The calculation is performed for a specific period of time. No credit taken for averaging. The limiting concentration is calculated as follows:

$$FMEC = \sum_{i} [(\sum_{s} C_{is}F_s) / (MEC_i \sum_{s} F_s)]$$

Where:

FMEC	=	The fraction of Maximum Effluent Concentration, the ratio at the point of discharge of the actual concentration to ten times the Effluent Concentration of 10 CFR 20, Appendix B, Table 2, Column 2 for radionuclides other than dissolved or entrained noble gases. For noble gases, the concentration shall be limited to 2 E-4 microcurie/ml total activity.
$C_{is}=(\mu Ci/ml)_{is}$	=	The concentration of nuclide i in particular effluent stream s, μCi/ml.
F_s	=	The flow rate of a particular effluent stream s, gpm.
MEC_i	=	Maximum Effluent Concentration, ten times the Effluent Concentration of a specific nuclide i from 10CFR20, Appendix B, Table 2, Column 2 (noble gas limit is 2E-4 μCi/ml).
$\sum_{s} (C_{is}F_s)$	=	The total activity rate of nuclide i, in all effluent streams s.
$\sum_{s} (F_s)$	=	The total flow rate of all effluent streams s, gpm (including those streams which do not contain radioactivity).

A value of less than one for FMEC is considered acceptable for compliance with Part I Section DLCO 3.6.15.a.(1).

1.3 Dose Determinations

1.3.1 Maximum Dose Equivalent Pathway

A dose assessment report was prepared for the Nine Mile Point Unit 1 facility by Charles T. Main, Inc., of Boston, MA. This report presented the calculated dose equivalent rates to individuals as well as the population within a 50-mile radius of the facility based on the radionuclides released in liquid and gaseous effluents during the time periods of 1 July 1980 through 31 December 1980 and from January 1981 through 31 December 1981. The radwaste liquid releases are based on a canal discharge rate of 590 ft^3/sec which affects near field and far field dilution; therefore, this report is specific to this situation. Utilizing the effluent data contained in the Annual Radioactive Effluent Release Reports as source terms, dose equivalent rates were determined using the environmental pathway models specified in Regulatory Guides 1.109 and 1.111 as incorporated in the NRC computer codes LADTAP for liquid pathways, and XOQDOQ and GASPAR for gaseous effluent pathways. Dose equivalent rates were calculated for the total body as well as seven organs and/or tissues for the adult, teen, child, and infant age groups. From the standpoint of liquid effluents, the pathways evaluated included fish and drinking water ingestion, and external exposure to water and sediment.

1.3.1 Maximum Dose Equivalent Pathway (Cont'd)

The majority of the dose for a radwaste liquid batch release was received via the fish pathway. However, to comply with Part I Specifications for dose projections, the drinking water and sediment pathways are included. Therefore, all doses due to liquid effluents are calculated monthly for the fish and drinking water ingestion pathways and the sediment external pathway from all detected nuclides in liquid effluents released to the unrestricted areas to each organ. The dose projection for liquid batch releases will also include discharges from the emergency condenser vent as applicable, for all pathways. Each age group dose factor, A_{iat}, is given in Tables 2-1 to 2-8. To expedite time, the dose is calculated for a maximum individual instead of each age group. This maximum individual will be a composite of the highest dose factor of each age group for each organ, hence A_{it}. The following expression from NUREG 0133, Section 4.3 is used to calculate dose:

$$D_t = \sum_{i} [A_{it} \sum_{L} (\Delta T_L C_{iL} F_L)]$$

Where:

D_t = The cumulative dose commitment to the total body or any organ, from the liquid effluents for the total time period (ΔT_L), mrem.

ΔT_L = The length of the L th time period over which C_{iL} and F_L are averaged for all liquid releases, hours.

C_{iL} = The average concentration of radionuclide, i, in undiluted liquid effluents during time period ΔT_L from any liquid release, μCi/ml.

A_{it} = The site related ingestion dose commitment factor to the total body or any organ t for each identified principal gamma or beta emitter for a maximum individual, mrem/hr per μCi/ml.

F_L = The near field average dilution factor for C_{iL} during any liquid effluent release. Defined as the ratio of the maximum undiluted liquid waste flow during release to the average flow from the site discharge structure to unrestricted receiving waters, unitless.

A_{iat} values for radwaste liquid batch releases at a discharge rate of 295 ft^3/sec (one circulating water pump in operation) are presented in tables 2-1 to 2-4. A_{iat} values for an emergency condenser vent release are presented in tables 2-5 to 2-8. The emergency condenser vent releases are assumed to travel to the perimeter drain system and released from the discharge structure at a rate of .33 ft^3/sec. See Appendix A for the dose factor A_{iat} derivation. To expedite time the dose is calculated to a maximum individual. This maximum individual is a composite of the highest dose factor A_{iat} of each age group a for each organ t and each nuclide i. If a nuclide is detected for which a factor is not listed, then it will be calculated and included in a revision to the ODCM.

All doses calculated in this manner for each batch of liquid effluent will be summed for comparison with quarterly and annual limits, added to the doses accumulated from other releases in the quarter and year of interest. In all cases, the following relationships will hold:

1.3.1 Maximum Dose Equivalent Pathway (Cont'd)

For a calendar quarter:

$D_t \leq 1.5$ mrem total body

$D_t \leq 5$ mrem for any organ

For the calendar year:

$D_t \leq 3.0$ mrem total body

$D_t \leq 10$ mrem for any organ

Where:

D_t = total dose received to the total body or any organ due to liquid effluent releases.

If these limits are exceeded, a special report will be submitted to the NRC identifying the cause and proposed corrective actions. In addition, if these limits are exceeded by a factor of two, calculations shall be made to determine if the dose limits contained in 40 CFR 190 have been exceeded. Dose limits, as contained in 40 CFR 190 are total body and organ doses of 25 mrem per year and a thyroid dose of 75 mrem per year.

These calculations will include doses as a result of liquid and gaseous pathways as well as doses from direct radiation. The liquid pathway analysis will only include the fish and sediment pathways since the drinking water pathway is insignificant. This pathway is only included in the station's effluent dose projections to comply with Part I Specifications. Liquid, gaseous and direct radiation pathway doses will consider the James A. FitzPatrick and Nine Mile Point Unit 2 facilities as well as Nine Mile Point Unit 1 Nuclear Station and the on-site ISFSI facilities.

In the event the calculations demonstrate that the 40 CFR 190 dose limits, as defined above, have been exceeded, then a report shall be prepared and submitted to the Commission within 30 days as specified in Part I Section DLCO 3.6.15.d.

Section 3.0 of the ODCM contains more information concerning calculations for an evaluation of whether 40 CFR 190 limits have been exceeded.

1.3.2 Dose Projections – Determinations of the Need to Operate the Liquid Radwaste Treatment System

1.3.2.1 Requirements

DLCO 3.6.16.a requires that the liquid radwaste system be used to reduce the radioactive materials in liquid wastes prior to their discharge when the projected doses due to the liquid effluent would exceed 0.06 mrem to the total body or 0.2 mrem to any organ for the batch. This Control implements Technical Specification 6.5.3.f that requires the Radioactive Effluent Controls Program to include limitations on the functional capability and use of the liquid effluent treatment system to ensure the appropriate portion of this system is used to reduce releases of radioactivity. This is required when the projected doses would exceed 0.06 mrem to the total body and 0.2 mrem to any organ. Since releases are performed much less frequently than once per month, doses are to be projected prior to each release and the above limits will be applied on a batch basis.

1.3.2.2 Methodology

The dose projection for each batch is calculated in the same manner as cumulative dose calculations for the current calendar quarter and current calendar year. See II-1.1.4.4 and II-1.3.1. If the calculated dose is greater than 0.06 mrem to the total body or 0.2 mrem to any organ, the appropriate subsystems of the liquid radwaste system shall be used to reduce the radioactivity levels of the batch prior to release.

1.3.2.3 Continuous Liquid Release Dose Projections

Each month that a continuous liquid release is in progress, or is anticipated, the expected dose to man can be accounted for or projected. Since a continuous release does not result from not operating a portion of the Liquid Radwaste System, projections are not required to determine or evaluate Radwaste System Functionality. Dose projections may be relevant to planning repairs, and in reporting intended actions. See II-1.1.4.5.

2.0 GASEOUS EFFLUENTS

2.1 Setpoint Determinations

2.1.1 Basis

Stack gas monitor setpoints will be established such that the instantaneous release rate of radioactive materials in gaseous effluents does not exceed the 10 CFR 20 limits for annual release rate. The setpoints will be activated if the instantaneous dose rate at or beyond the (land) site boundary would exceed 500 mrem/yr to the whole body or 3000 mrem/yr to the skin from the continuous release of radioactive noble gas in the gaseous effluent.

The offgas (condenser air ejector activity) monitor setpoints provide assurance that the total body exposure to an individual at the exclusion area boundary does not exceed a small fraction of the dose guidelines of 10 CFR 100.

Emergency condenser vent monitor setpoints will be established such that the release rate for radioactive materials in gaseous effluents do not exceed the Technical Specification dose rate limits. Monitor setpoints for emergency condenser vent monitors are conservatively fixed at 5 mr/hr for reasons described in Section II-2.1.4 and therefore do not require periodic recalculations.

Monitor setpoints from continuous release points will be determined once per quarter under normal release rate conditions and will be based on the isotopic composition of the actual release in progress, or an offgas isotopic distribution or a more conservative default composition specified in the pertinent procedure. If the calculated setpoint is higher than the existing setpoint, it is not mandatory that the setpoint be changed.

Under abnormal site release rate conditions, monitor alarm setpoints from continuous release points will be recalculated and, if necessary, reset at more frequent intervals as deemed necessary by Chemistry Supervision. In particular, contributions from both JAF and NMP-2 and the Emergency Condenser Vents shall be assessed.

During outages and until steady state power operation is again realized, the last operating stack and off gas monitor alarm setpoints shall be used.

Since monitors respond to noble gases only, monitor alarm points are set to alarm prior to exceeding the corresponding whole body dose rates.

The skin dose rate limit is not used in setpoint calculations because it is never limiting.

2.1.2 Stack Monitor Setpoints

The detailed methods for establishing setpoints shall be contained in the station procedures. These methods shall apply the following general criteria:

(1) Rationale for Stack monitor settings is based on the general equation:

$$\frac{\text{release rate, actual}}{\text{corresp. dose rate, actual}} = \frac{\text{release rate, max. allowable}}{\text{corresp. dose rate, max. allowable}}$$

$$\frac{\sum_i Q_i}{\sum_i Q_i \left(V_i + (SF) K_i (X/Q)_s\right)} = \frac{(Q)\max}{500\, mrem/yr}$$

2.1.2 Stack Monitor Setpoints (Cont'd)

Where:

Q_i = release rate for each isotope i, μCi/sec.

V_i = gamma whole body dose factor in units of mrem/yr per μCi/sec. (See Table 3-2).

$(Q)_{max}$ = instantaneous release rate limit μCi/sec.

SF, K_i, X/Q = See Section II-2.2.1.1.

(2) To ensure that Part I dose rate limits are not exceeded, the Hi Hi alarms on the stack monitors shall be set lower than or equal to (0.9) $(Q)_{max}$. Hi alarms shall be set lower than or equal to (0.5) $(Q)_{max}$.

(3) Based on the above conservatism, the dose contribution from JAF and NMP-2 can usually be ignored. During Emergency Classifications at JAF or NMP-2 due to airborne effluent, or after emergency condenser vent releases of significant proportions, the 500 mrem/yr value may be reduced accordingly.

(4) To convert monitor gross count rates to μCi/sec release rates, the following general formula shall be applied:

$(C_m\text{-}B)\ K_s = Q =$ μCi/sec, release rate

Where:

C_m = monitor gross count rate in cps or cpm

B = monitor background count rate

K_s = stack monitor efficiency factor with units of μCi/sec-cps or μCi/sec-cpm

(5) Monitor K_s factors shall be determined using the general formula:

$$K_s = \sum {}_iQ_i/(C_m\text{-}B)$$

Where:

Q_i = individual radionuclide stack effluent release rate as determined by isotopic analysis.

K_s factors more conservative than those calculated by the above methodology may be assumed.

Alternatively, when stack release rates are near the lower limit of detection, the following general formula may be used to calculate K_s:

$$1/K_s = \frac{E}{f} = \frac{(\sum_i F_i \sum_k Y_k E_k)\ (3.7E4\ \text{dis/sec per}\ \mu\text{Ci})}{f}$$

Where:

f = stack flow in cc/sec.

E = efficiency in units of cpm-cc/μCi or cps-cc/μCi (cpm = counts per minute; cps = counts per second).

E_k = cpm-cc/bps or cps-cc/γps.

From energy calibration curve produced during NIST traceable primary gas calibration or transfer source calibration (bps = beta per second;γps = gammas per second).

2.1.2 Stack Monitor Setpoints (Cont'd)

Y_k = b/d (betas/disintegration) or γ/d (gammas/disintegration).

F_i = Activity fraction of nuclide i in the mixture.

i = nuclide counter.

k = discrete energy beta or gamma emitter per nuclide counter.

s = seconds.

This monitor calibration method assumes a noble gas distribution typical of a recoil release mechanism. To ensure that the calculated efficiency is conservative, beta or gamma emissions whose energy is above the range of calibration of the detector are not included in the calculation.

2.1.3 Recombiner Discharge (Off Gas) Monitor Setpoints

(1) The Hi-Hi alarm points shall activate with recombiner discharge rates equal to or less than 500,000 μCi/sec. This alarm point may be set equal to or less than 1 Ci/sec for a period of time not to exceed 60 days provided the offgas treatment system is in operation. According to Part I, Note (c) to Table D 4.6.14-2, the channel functional test of the condenser air ejector radioactivity monitor shall demonstrate that automatic isolation of this pathway occurs if either of the following conditions exist:

i) Instruments indicate two channels above the Hi-Hi alarm setpoint,

ii) Instruments indicate one channel above Hi-Hi alarm setpoint and one channel downscale.

This automatic isolation function is tested once per operating cycle in accordance with station procedures.

(2) The Hi alarm points shall be set to activate at equal to or less than five (5) times normal full power background.

If the monitor alarms at this setpoint, the offgas will be immediately sampled and analyzed, followed by an analysis of reactor coolant sample.

(3) To convert monitor mR/hr readings to μCi/sec, the formula below shall be applied:

$(R)(K_R) = Q_R$ μCi/sec recombiner discharge release rate

Where:
R = mR/hr monitor indicator.

K_R = efficiency factor in units of μCi/sec/mR/hr determined prior to setting monitor alarm points.

(4) Monitor K_R factors shall be determined using the general formula:

$$K_R = \sum {}_iQ_i/R$$

Where:
Q_i = individual radionuclide recombiner discharge release rate as determined by isotopic analysis and flow rate monitor.

K_R factors more conservative than those calculated by the above methodology may be assumed.

2.1.3 Recombiner Discharge (Off Gas) Monitor Setpoints (Cont'd)

(5) The setpoints chosen provide assurance that the total body exposure to an individual at the exclusion area boundary will not exceed a very small fraction of the limits of 10CFR Part 100 in the event this effluent is inadvertently discharged directly to the environment without treatment (thereby implementing the requirements of General Design Criteria 60 and 64 of Appendix A to 10CFR Part 50). Additionally, these setpoints serve to limit buildup of fission product activity within the station systems which would result if high fuel leakage were to be permitted over extended periods.

2.1.4 Emergency Condenser Vent Monitor Setpoint

The monitor setpoint was established by calculation ("Emergency Condenser Vent Monitor Alarm Setpoint", January 13, 1986, NMPC File Code #16199). Assuming a hypothetical case with (1) reactor water iodine concentrations higher than the Technical Specification Limit, (2) reactor water noble gas concentrations higher than would be expected at Technical Specification iodine levels, and (3) leakage of reactor steam into the emergency condenser shell at 300% of rated flow (or 1.3 E6 lbs/hr), the calculation predicts an emergency condenser vent monitor response of 20 mR/hr. Such a release would result in less than 10 CFR 20 dose rate values at the site boundary and beyond for typical emergency condenser cooldown periods.

Since a 20 mR/hr monitor response can, in theory, be achievable only when reactor water iodines are higher than permitted by Technical Specifications, a conservative monitor setpoint of 5 mr/hr has been adopted.

2.1.5 Discussion

2.1.5.1 Stack Effluent Monitoring System Description

The NMP-1 Stack Effluent Monitoring System consisted of two subsystems; the Radioactive Gaseous Effluent Monitoring System (RAGEMS) and the Offgas Effluent Stack Monitoring System (OGESMS). The OGESMS shall be used to monitor station noble gas effluents and collect particulates and iodine samples in compliance with Part I requirements.

The RAGEMS was designed to be promptly activated from the Main Control Room for use in high range monitoring during accident situations in compliance with NUREG 0737 criteria. In accordance with a letter dated September 11, 2002 from the NRC to NMPNS, LLC, "Nine Mile Point Nuclear Station Unit 1 – Use of the Offgas Effluent Stack Monitoring System to Meet Regulatory Guide 1.97, Revision 2 and NUREG-0737," OGESMS meets the objective and purpose of NUREG-0737 and RG 1.97. The sample line to RAGEMS will now be used as an additional auxiliary sample point.

2.1.5.2 Stack Sample Flow Path – RAGEMS Auxiliary Sample Point

The effluent sample is obtained inside the stack at elevation 530' using an isokinetic probe with four orifices. The sample line then bends radially out and back into the stack; descends down the stack and out of the stack at approximately elevation 257'; runs horizontally (enclosed in heat tracing) some 270' along the off gas tunnel; and enters Turbine Building 250' and Offgas Building 247'.

2.1.5.3 Stack Sample Flow Path - OGESMS

The OGESMS sample is obtained from the same stack sample probe as the RAGEMS Auxiliary Sample Point. From the exit of the stack at elevation 257', the sample line runs east approximately 20' and then vertically approximately 8' to the OGESMS skid. In the OGESMS, sample flows thru a particulate/iodine cartridge housing and four noble gas scintillation detectors (i.e., 07 and 08 low range beta detectors and RN-03A and RN-03B high range gamma detectors). From OGESMS, the stack sample flows back into the stack at approximately elevation 257'.

All OGESMS detector outputs are monitored and recorded remotely in the Main Control Room. Alarming capabilities are provided to alert Operators of high release rate conditions prior to exceeding Part I Control DLCO 3.6.15.b (1)(a) whole body dose rate limits.

Stack particulate and iodine samples are retrieved manually from the OGESMS and analyzed in the laboratory using gamma spectroscopy at frequencies and LLDs specified in Part I Table D 4.6.15-2.

2.1.5.4 Sampling Frequency/Sample Analysis

Radioactive gaseous wastes shall be sampled and analyzed in accordance with the sampling and analysis program specified in Part I Table D 4.6.15-2. Noble gas sample and analysis frequencies are increased during elevated release rate conditions. Noble gas sample and analysis are also performed following startup, shutdown and in conjunction with each drywell purge. Particulate samples are saved and analyzed for principal gamma emitters, gross alpha, Fe-55, Sr-89, Sr-90 at monthly intervals minimally, and in response to an increase in noble gas release rate. The latter three analyses are performed off-site from a composite sample.

Consistent with Part I Table D 4.6.15-2, stack effluent tritium is sampled monthly, during each drywell purge, and weekly when fuel is off loaded until stable release rates are demonstrated. Samples are analyzed off-site.

Line loss correction factors are applied to all particulate and iodine results. Correction factors of 2.0 and 1.5 are used for data obtained from RAGEMS Auxiliary Sample Point and OGESMS respectively. These correction factors are based on empirical data from sampling conducted at NMP-1 in 1985 (memo from J. Blasiak to RAGEMS File, 1/6/86, "Stack Sample Representativeness Study: RAGEMS versus In-Stack Auxiliary Probe Samples").

2.1.5.5 I-133 and I-135 Estimates

Monthly, the stack effluent shall be sampled for iodines over a 24 hour period and the I-135/I-131 and the I-133/I-131 ratios calculated. These ratios shall be used to calculate I-133, I-135 release for longer acquisition samples collected during the month.

2.1.5.5 I-133 and I-135 Estimates (Cont'd)

Additionally, the I-135/I-131 and I-133/I-131 ratios should also be determined after a significant change in the ratio is suspected (eg, plant status changes from prolonged shutdown to power operation or fuel damage has occurred). I-135 will be included in the Radioactive Effluent Release Report in accordance with Regulatory Guide 1.21 but it will not be included when totaling dose rate or dose.

2.1.5.6 Gaseous Radwaste Treatment System Operation

Part I Control DLCO 3.6.16.b requires that the gaseous radwaste treatment system shall be functional and shall be used to reduce radioactive materials in gaseous waste prior to their discharge as necessary to meet the requirements of Part I Control DLCO 3.6.15.b.

To ensure Part I Control DLCO 3.6.15.b limits are not exceeded, and to confirm proper radwaste treatment system operation as applicable, cumulative dose contributions for the current calendar quarter and current calendar year shall be determined monthly in accordance with section 2.2 of this manual. Initial dose calculations shall incorporate the following assumptions with regard to release rates of non-gamma emitting radionuclides subsequently analyzed off-site:

a)	H-3 release rate	$\leq$ 4 μCi/sec
b)	Sr-89 release rate	$\leq$ 4 x Cs-137 release rate
c)	Sr-90 release rate	$\leq$ 0.5 x Cs-137 release rate
d)	Fe-55 release rate	$\leq$ 1 x Co-60 release rate

Assumed release rates represent conservative estimates derived from analysis of historical data from effluent releases and process waste streams (See NMP 34023, C. Ware to J. Blasiak, April 29, 1988, "Dose Estimates for Beta-Emitting Isotopes"). Following receipt of off-site H-3, Sr-89, Sr-90, Fe-55 analysis information, dose estimates shall be revised using actual radionuclide concentrations.

2.2 Dose and Dose Rate Determinations

In accordance with Technical Specifications 6.5.3, "Radioactive Effluent Controls Program, and ODCM Part I Controls DSR 4.6.15.b.(1), DSR 4.6.15.b.(2), and DSR 4.6.15.b.(3) dose and dose rate determinations will be made monthly to determine:

(1) Whole body dose rates and gamma air doses at the maximum X/Q land sector site boundary interface.

(2) Skin dose rates and beta air doses at the maximum X/Q land sector site boundary interface.

(3) The critical organ dose and dose rate at a critical receptor location beyond the site boundary.

Average meteorological data (ie, maximum five year annual average X/Q and D/Q values in the case of elevated releases or 1985 annual average X/Q and D/Q values, in the case of ground level releases) shall be utilized for dose and dose rate calculations. Where average meteorological data is assumed, dose and dose rates due to noble gases at locations beyond the site boundary will be lower than equivalent site boundary dose and dose rates. Therefore, under these conditions, calculations of noble gas dose and dose rates beyond the maximum X/Q land sector site boundary locations can be neglected.

2.2 Dose and Dose Rate Determinations (Cont'd)

The frequency of dose rate calculations will be upgraded when elevated release rate conditions specified in subsequent sections II-2.2.1.1 and II-2.2.1.2 are realized.

In accordance with Technical Specification 6.5.3.g, noble gas dose rate to the whole body and skin will be calculated at the site boundary. In accordance with Technical Specification 6.5.3.h, gamma and beta air doses may be calculated at a point beyond the site boundary.

To demonstrate compliance with Technical Specification 6.5.3, "Radioactive Effluent Controls Program", critical organ doses and dose rates may be conservatively calculated by assuming the existence of a maximum individual. This individual is a composite of the highest dose factor of each age group, for each organ and total body, and each nuclide. It is assumed that all pathways are applicable and the highest X/Q and/or D/Q value for actual pathways as noted in Table 3-1 are in effect. The maximum individual's dose is equal to the same dose that person would receive if they were simultaneously subjected to the highest pathway dose at each critical receptor identified for each pathway. The pathways include grass-(cow and goat)-milk, grass-cow-meat, vegetation, ground plane and inhalation. To comply with Part I requirements the maximum individual dose rate will be calculated at this hypothetical critical residence.

If dose or dose rates calculated, using the assumptions noted above, reach Part I limits, actual pathways will be evaluated, and dose/dose rates may be calculated at separate critical receptor locations and compared with applicable limits.

Emergency condenser vent release contributions to the monthly dose and dose rate determinations will be considered only when the emergency condenser return isolation valves have been opened for reactor cooldown, if Emergency Condenser tube leaks develop with or without the system's return isolation valve opened, or if significant activity is detected in the Emergency Condenser Shell.

Without tube leakage, dose contributions from emergency condenser vent releases are to be determined based on condensate storage tank and emergency condenser shell isotopic distributions.

When releases from the emergency condenser have occurred, dose rate and dose determinations shall be performed using methodology in II-2.2.1 and II-2.2.2. Furthermore, environmental sampling may also be initiated to refine any actual contribution to doses. See Section II-2.4.

2.2.1 Dose Rate

Dose rates will be calculated monthly, at a minimum, or when the Hi-Hi stack monitor alarm setpoint is reached, to demonstrate that dose rates resulting from the release of noble gases, tritium, iodines, and particulates with half lives greater than 8 days are within the limits specified in Technical Specifications Section 6.5.3, "Radioactive Effluent Controls Program". These limits are:

<u>Noble Gases</u>

Whole Body Dose Rate:	500 mrem/yr
Skin Dose Rate:	3000 mrem/yr

<u>Tritium, Iodines and Particulates</u>

Organ Dose Rate: 1500 mrem/yr

2.2.1.1 Noble Gases

The following noble gas dose rate equation includes the contribution from the stack (s) elevated release and the emergency condenser vent (v) ground level release when applicable (See section II-2.2).

For whole body dose rates (mrem/sec):

$$DR_{\gamma}\ (\text{mrem/sec}) = 3.17E\text{-}8 \sum_{i} [(V_i + (SF)\, K_i\, (X/Q)_s)\, Q_{is} + (SF) K_i\, (X/Q)_v Q_{iv}]$$

For skin dose rates (mrem/sec):

$$DR_{\gamma+\beta}(\text{mrem/sec}) = 3.17E\text{-}8 \sum_{i} [(L_i(X/Q)_s + 1.11(SF)(B_i + M_i(X/Q)_s))Q_{is} + (L_i + 1.11(SF)M_i)(X/Q)_v Q_{iv}]$$

Where:

DR_{γ} = whole body gamma dose rate (mrem/sec).

$DR_{\gamma+\beta}$ = skin dose rate from gamma and beta radiation (mrem/sec).

V_i = the constant accounting for the gamma whole body dose rate from stack radiation for an elevated finite plume release for each identified noble gas nuclide, i. Listed on Table 3-2 in mrem/yr per μCi/sec.

K_i = the constant accounting for the gamma whole body dose rate from immersion in the semi-infinite cloud for each identified noble gas nuclide, i. Listed in Table 3-3 in mrem/yr per μCi/m^3 (from Reg. Guide 1.109)

Q_{is}, Q_{iv} = the release rate of isotope i from the stack(s) or emergency condenser vent(v); (μCi/sec)

SF = structural shielding factor.

X/Q = the relative plume concentration (in units of sec/m^3) at the land sector site boundary or beyond. Average meteorological data (Table 3-1) is used. "Elevated" X/Q values are used for stack releases (s = stack); "Ground" X/Q values are used for Emergency Condenser Vent releases (v = vent).

L_i = the constant accounting for the beta skin dose rate from immersion in the semi-infinite cloud for each identified noble gas nuclide, i. Listed in Table 3-3 in mrem/yr per μCi/m^3 (from Reg. Guide 1.109)

B_i = the constant accounting for the gamma air radiation from the elevated Finite plume resulting from stack releases for each identified noble gas nuclide, i. Listed in Table 3-2 in mrad/yr per μCi/sec.

2.2.1.1 Noble Gases (Cont'd)

M_i = the constant accounting for the gamma air dose rate from immersion in the semi-infinite cloud for each identified noble gas nuclide, i. Listed in Table 3-3 in mrad/yr per $\mu Ci/m^3$ (from Reg. Guide 1.109)

See Appendix B for derivation of B_i and V_i.

To ensure that the site noble gas dose rate limits are not exceeded, the following procedural actions are taken if the offsite dose rates from Unit 1 exceed 10% of the limits:

1) Notify Unit 1 SM (Shift Manager) and Supervisor Chemistry.

2) Notify Unit 2 SM and Supervisor Chemistry and request the Unit 2 contribution to offsite dose rate.

3) Notify SM of the James A. Fitzpatrick Nuclear Plant and request the Fitzpatrick contribution to offsite dose rate.

4) Increase the frequency of performing noble gas dose and dose rate calculations, if necessary, to ensure Site (Nine Mile Point Units 1 and 2 and Fitzpatrick) limits are not exceeded.

Additionally, alarm setpoints are set at 90% of the dose rate limit to ensure that site limits are not exceeded. This alarm setpoint is adjusted if the noble gas dose rate from Unit 1 is greater than 10% of the limit.

2.2.1.2 Tritium, Iodines and Particulates

To ensure that the 1500 mrem/year site dose rate limit is not exceeded, offsite dose rates for tritium, iodine and particulates with half lives greater than 8 days shall be calculated monthly and when release rates (Q) exceed 0.34 μCi/sec using the following equation.

$$D_{ak}\ (\text{mrem/sec}) = 3.17\text{E-}8 \sum_j [\sum_i R_{ijak} [W_s Q_{is} + W_v Q_{iv}]]$$

Where:

D_{ak} = Total dose rate to each organ k of an individual in age group a (mrem/sec).

W_j = dispersion parameter either X/Q (sec/m^3) or D/Q ($1/m^2$) depending on pathway and receptor location assumed. Average meteorological data is used (Table 3-1). "Elevated" W_j values are used for stack releases (s = stack); "Ground" W_j values are used for Emergency Condenser Vent releases (v = vent).

Q_i = the release rate of isotope i, from the stack (s) or vent(v); (μCi/sec).

2.2.1.2 Tritium, Iodines and Particulates (Cont'd)

R_{ijak} = the dose factor for each isotope i, pathway j, age group a, and organ k (Table 3-4, through 3-22; m^2-mrem/yr per μCi/sec for all pathways except inhalation, mrem/yr per μCi/m^3. The R values contained in Tables 3-4 through 3-22 were calculated using the methodology defined in NUREG-0133 and parameters from Regulatory Guide 1.109, Revision 1; as presented in Appendix C.

3.17E-8 = the inverse of the number of seconds in a year.

The use of the 0.34 μCi/sec release rate threshold to perform Unit 1 dose rate calculations is justified as follows:

(a) The 1500 mrem/yr organ dose rate limit corresponds to a minimum release rate limit of 0.34 μCi/sec calculated using the equation:

$$1500 = (Q, \mu Ci/sec) \times (R_{ij}W_j)_{max}$$

Where:

1500 = site boundary dose rate limit (mrem/year).

$(R_{ij}W_j)_{max}$ = the maximum curie-to-dose conversion factor equal to 4.34E3 mrem-sec/μCi-yr for Sr-90, child bone for the vegetation pathway at the critical residence receptor location beyond the site boundary for an elevated release.

(b) The use of 0.34 μCi/sec release rate threshold and the 4.34E3 mrem-sec/μCi-yr curie-to-dose conversion factor is conservative since curie-to-dose conversion factors for other isotopes likely to be present are significantly lower.

If the organ dose rate exceeds 5% of the annual limit, the following procedural actions will be taken:

1) Notify Unit 1 SM (Shift Manager) and Supervisor Chemistry.

2) Notify Unit 2 SM and Supervisor Chemistry and request the Unit 2 contribution to offsite dose rate.

3) Notify SM of James A. Fitzpatrick Nuclear Plant and request JAF's contribution to offsite dose rate.

4) Increase the frequency of performing dose and dose rate calculations if necessary to ensure site (Nine Mile Point Units 1 and 2 and Fitzpatrick) limits are not exceeded.

2.2.2 Dose

Calculations will be performed monthly at a minimum, to demonstrate that doses resulting from the release of noble gases, tritium, iodines, and particulates with half lives greater than 8 days are within the limits specified in 10 CFR 50, Appendix I. These limits are:

Noble Gases

5 mR gamma/calendar quarter
10 mrad beta/calendar quarter
10 mR gamma/calendar year
20 mrad beta/calendar year

Tritium, Iodines and Particulates

7.5 mrem to any organ/calendar quarter
15 mrem to any organ/calendar year

2.2.2.1 Noble Gas Air Dose

The following Noble Gas air dose equation includes contributions from the stack (s) elevated release and the emergency condenser vent (v) ground level release when applicable (see section II-2.2):

For gamma radiation[1] (mrad):

$$D_\gamma \text{ (mrad)} = 3.17E\text{-}8 \sum_i [(B_i + M_i(X/Q)_s)\, Q_{is} + M_i(X/Q)_v\, Q_{iv}]\, t$$

For beta radiation (mrad):

$$D_\beta \text{ (mrad)} = 3.17E\text{-}8 \sum_i N_i[(X/Q)_s\, Q_{is} + (X/Q)_v\, Q_{iv}]\, t$$

Where:

D_γ = gamma air dose (mrad).
D_β = beta air dose (mrad).

[1] Note that the units for the gamma air dose are in mrad compared to the units for the limits are in mR. The NRC recognizes that 1 mR=1 mrad, for gamma radiation.

B_i = the constant accounting for the gamma air radiation from the elevated finite plume resulting from stack releases for each identified noble gas nuclide, i. Listed in Table 3-2 in mrad/yr per μCi/sec.

N_i = the constant accounting for the beta air dose from immersion in the semi-infinite cloud for each identified noble gas nuclide, i. Listed on Table 3-3 in mrad/yr per μCi/m^3 (from Reg. Guide 1.109).

Q_{is}, Q_{iv} = the release rate of isotope i, from the stack (s) or vent (v); (μCi/sec).

2.2.2.1 Noble Gas Air Dose (Cont'd)

3.17E-8	=	the inverse of the number of seconds in a year.
M_i	=	the constant accounting for the gamma air dose from immersion in the semi-infinite cloud for each identified noble gas nuclide, i. Listed on Table 3-3 in mrad/yr per $\mu Ci/m^3$ (from Reg. Guide 1.109).
t	=	total time during release period, sec.

All other parameters are as defined in section II-2.2.1.1.

2.2.2.2 Tritium, Iodines and Particulates

To ensure that the 15 mrem/yr facility dose limit is not exceeded, offsite doses for tritium, iodines, and particulates with half lives greater than 8 days shall be calculated monthly using the following equation:

$$D_{ak}\ (\text{mrem}) = 3.17\text{E-}8 \sum_{j} [\sum_{i} R_{ijak}\ [W_s\ Q_{is} + W_v\ Q_{iv}]\ ]\ t$$

Where:

D_{ak}	=	total dose to each organ k of an individual in age group a(mrem).
W_J	=	dispersion parameter either X/Q (sec/m^3) or D/Q ($1/m^2$) depending on pathway and receptor location assumed. Average meteorological data is used (Table 3-1). "Elevated" W_j values are used for stack releases (s = stack); "Ground" W_j values are used for Emergency Condenser Vent releases (v = vent).
Q_{is}, Q_{iv}	=	the release rate of isotope i from stack(s) or vent (v); (μCi/sec).
R_{ijak}	=	the dose factor for each isotope i, pathway j, age group a, and organ k (Tables 3-4 through 3-7, mrem/yr per $\mu Ci/m^3$; Tables 3-8 through 3-22, m^2-mrem/yr per μCi/sec). R values contained in Tables 3-4 through 3-22 were calculated using the methodology defined in NUREG-0133 and parameters from Regulatory Guide 1.109, Revision 1; as presented in Appendix C.
3.17E-8	=	the inverse of the number of seconds in a year.
t	=	total time during the release period, sec.

2.2.2.3 Accumulating Doses

Doses will be calculated monthly, at a minimum, for gamma air, beta air, and the critical organ for each age group. Dose estimates will, also, be calculated monthly prior to receipt of any offsite or onsite analysis data i.e., strontium, tritium, and iron-55. Results will be summed for each calendar quarter and year.

The critical doses are based on the following:

- noble gas plume air dose
- direct radiation from ground plane deposition
- inhalation dose
- cow milk ingestion dose
- goat milk ingestion dose
- cow meat ingestion dose
- vegetation (food crops) ingestion dose

The quarterly and annual results shall be compared to the limits listed in paragraph II-2.2.2. If the limits are exceeded, special reports, as required by Part I Section D 6.9.3 shall be submitted.

2.2.3 Dose Projections – Determination of Need to Operate Gaseous Radwaste Treatment System and Ventilation Exhaust Treatment System

2.2.3.1 Requirement

DLCO 3.6.16.b requires that the Gaseous Radwaste Treatment System be used to reduce the radioactive materials in gaseous waste prior to their discharge as necessary to meet the requirements of DLCO 3.6.15. DLCO 3.6.16.b(2) requires that the Ventilation Exhaust Treatment System be used to reduce releases of radioactivity when the projected doses in 31 days would exceed 0.3mrem to any organ. These Controls implement Technical Specification 6.5.3.f that requires the Radioactive Effluent Control Program to include limitations on the functional capability and use of the gaseous effluent treatment systems (Gaseous Radwaste Treatment System AND Ventilation Exhaust Treatment System) to ensure the appropriate portions of these systems are used to reduce releases of radioactivity. The Gaseous Radwaste Treatment System is expected to be in service. For the Ventilation Exhaust Treatment System, use is required when the projected doses in a period of 31 days would exceed 2% of the guidelines for the annual dose or dose commitment, conforming to 10CFR50, Appendix I, i.e., 3 mrem to any organ. When Treatment systems are not in use, doses are to be projected every 31 days.

The appropriate components, which affect iodine or particulate release, to be in use are:

<u>Rad Waste Building</u>
FLT-204-24
FLT-204-25
FLT-204-69
FLT-204-70

<u>RSSB</u>
FLT-204-147

2.2.3.2 Methodology

Due to system design and operating procedures the charcoal beds are always operated when the offgas system is in operation. Therefore, dose projection is not relevant to determining need to operate.

If the Gaseous Radwaste Treatment System becomes nonfunctional for more than seven days a Special Report to the NRC is required. This report will include appropriate dose assessments (cumulative and projected).

If Ventilation Exhaust Treatment System components become nonfunctional which prevent building effluent from being filtered, dose projections will be performed monthly using the methodology of Section II-2.2.2.2. Assumptions for released activity will be added to historical routine stack emissions for calculating dose during the anticipated period of component unavailability. The calculated projected doses for iodine and particulates will be compared to the DLCO 3.6.15.b limits and Technical Specifications Section 6.5.3.f limit, 0.3 mrem to any organ.

2.3 Critical Receptors

In accordance with the provisions of 10 CFR 20 and 10 CFR 50, Appendix I, the critical receptors have been identified and are contained in Table 3-1.

For elevated noble gas releases the critical receptor is the site boundary.

When 1985 average annual X/Q values are used for ground level noble gas releases, the critical receptor is the maximum X/Q land sector site boundary interface.

For tritium, iodines, and particulates with half lives greater than eight days, the critical pathways are grass-(cow and goat)-milk, grass-cow meat, vegetation, inhalation and direct radiation (ground plane) as a result of ground deposition.

The grass-(cow and goat)-milk, and grass-cow-meat pathways will be based on the greatest D/Q location. This location has been determined in conjunction with the land use census (Part I Control DLCO 3.6.22) and is subject to change. The vegetation (food crop) pathway is based on the greatest D/Q garden location from which samples are taken. This location may also be modified as a result of vegetation sampling surveys.

The inhalation and ground plane dose pathways will be calculated at the critical residence.

Because Part I states to calculate "at the site boundary or beyond", the doses and/or dose rates must be calculated for a maximum individual who is exposed to applicable pathways at the critical residence. The maximum individual is a composite of the highest dose factor of each age group, for each organ and total body, and each nuclide.

2.4 Refinement of Offsite Doses Resulting from Emergency Condenser Vent Releases

The doses resulting from the operation of the emergency condensers and calculated in accordance with II-2.2.2 may be refined using data from actual environmental samples. Ground deposition samples will be obtained from an area or areas of maximum projected deposition. These areas are anticipated to be at or near the site boundary and near projected plume centerline. Using the methodology found in Regulatory Guide 1.109, the dose will be calculated to the maximum exposed individual. This dose will then be compared to the dose calculated in accordance with II-2.2.2. The comparison will result in an adjustment factor of less than or greater than one which will be used to adjust the other doses from other pathways. Other environmental samples may also be collected and the resultant calculated doses to the maximum exposed individual compared to the dose calculated per II-2.2.2. Other environmental sample media may include milk, vegetation (such as garden broadleaf vegetables), etc. The adjustment factors from these pathways may be applied to the doses calculated per II-2.2.2 on a pathway by pathway basis or several pathway adjustment factors may be averaged and used to adjust calculated doses.

Doses calculated from actual environmental sample media will be based on the methodology presented in Regulatory Guide 1.109. The regulatory guide equations may be slightly modified to account for short intervals of time (less than one year) or modified for simplicity purposes by deleting decay factors. Deletion of decay factors would yield more conservative results.

3.0 40 CFR 190 REQUIREMENTS

The "Uranium Fuel Cycle" is defined in 40 CFR Part 190.02 (b) as follows:

"Uranium fuel cycle means the operations of milling of uranium ore, chemical conversion of uranium, isotopic enrichment of uranium, fabrication of uranium fuel, generation of electricity by a light-water-cooled nuclear power plant using uranium fuel, and reprocessing of spent uranium fuel, to the extent that these directly support the production of electrical power for public use utilizing nuclear energy, but excludes mining operations, operations at waste disposal sites, transportation of any radioactive material in support of these operations, and the reuse of recovered non-uranium special nuclear and by-product materials from the cycle."

Control DLCO 3.6.15.d of Part I requires that when the calculated doses associated with the effluent releases exceed twice the applicable quarter or annual limits, the licensee shall evaluate the calendar year doses and, if required, submit a Special Report to the NRC and limit subsequent releases such that the dose commitment to a real individual from all uranium fuel cycle sources is limited to 25 mrem to the total body or any organ (except the thyroid, which is limited to 75 mrem). This report is to demonstrate that radiation exposures to all real individuals from all uranium fuel cycle sources (including all liquid and gaseous effluent pathways and direct radiation) are less than the limits in 40 CFR Part 190. If releases that result in doses exceeding the 40 CFR 190 limits have occurred, then a variance from the NRC to permit such releases will be requested and if possible, action will be taken to reduce subsequent releases.

The report to the NRC shall contain:

1) Identification of all uranium fuel cycle facilities or operations within 5 miles of the nuclear power reactor units at the site that contribute to the annual dose of the maximum exposed member of the public.

2) Identification of the maximum exposed member of the public and a determination of the total annual dose to this person from existing pathways and sources of radioactive effluents and direct radiation.

The total body and organ doses resulting from radioactive material in liquid effluents from Nine Mile Point Unit 1 will be summed with the maximum doses resulting from the releases of noble gases, radioiodines, and particulates for the other calendar quarters (as applicable) and from the calendar quarter in which twice the limit was exceeded. The direct dose components will be determined by either calculation or actual measurement. Actual measurements will utilize environmental TLD dosimetry. Calculated measurements will utilize engineering calculations to determine a projected direct dose component. In the event calculations are used, the methodology will be detailed as required in Part I Section D 6.9.1.e.

3.0 40 CFR 190 REQUIREMENTS (Cont'd)

The doses from Nine Mile Point Unit 1 (including the on-site ISFSI) will be added to the doses to the maximum exposed individual that are contributed from other uranium fuel cycle operations within 5 miles of the site. Other uranium fuel cycle facilities within 5 miles of the Site include Nine Mile Point Nuclear Station Unit 2 and the James A. Fitzpatrick Nuclear Power Plant (including its on-site ISFSI). Doses from other facilities will be calculated in accordance with each facilities' ODCM.

For the purpose of calculating doses, the results of the Radiological Environmental Monitoring Program may be included for providing more refined estimates of doses to a real maximum exposed individual. Estimated doses, as calculated from station effluents, may be replaced by doses calculated from actual environmental sample results. Reports will include all significant details of the dose determination if radiological sampling and analyses are used to determine if the dose limits of 40CFR190 are exceeded.

3.1 Evaluation of Doses From Liquid Effluents

For the evaluation of doses to real members of the public from liquid effluents, the fish consumption and shoreline sediment ground dose will be considered. Since the doses from other aquatic pathways are insignificant, fish consumption and shoreline sediment are the only two pathways that will be considered. The dose associated with fish consumption may be calculated using effluent data and Regulatory Guide 1.109 methodology or by calculating a dose to man based on actual fish sample analysis data. Because of the nature of the receptor location and the extensive fishing in the area, the critical individual may be a teenager or an adult. The dose associated with shoreline sediment is based on the assumption that the shoreline would be utilized as a recreational area. This dose may be derived from liquid effluent data and Regulatory Guide 1.109 methodology or from actual shoreline sediment sample analysis data.

Equations used to evaluate doses from actual fish and shoreline sediment samples are based on Regulatory Guide 1.109 methodology. Because of the sample medium type and the half-lives of the radionuclides historically observed, the decay corrected portions of the equations are deleted. This does not reduce the conservatism of the calculated doses but increases the simplicity from an evaluation point of view. Table 3-23 presents the parameters used for calculating doses from liquid effluents.

The dose from fish sample media is calculated as:

$$R_{apj} = \sum_{i} [C_{if} (U)(D_{aipj}) f] (1E+3)$$

Where:

R_{apj} = The total annual dose to organ j, of an individual of age group a, from nuclide i, via fish pathway p, in mrem per year.

C_{if} = The concentration of radionuclide i in fish samples in pCi/gram.

U = The consumption rate of fish in kg/yr.

1E+3 = Grams per kilogram.

3.1 Evaluation of Doses From Liquid Effluents (Cont'd)

(D_{aipj}) = The ingestion dose factor for age group a, nuclide i, fish pathway p, and organ j, (Reg. Guide 1.109, Table E-11) (mrem/pCi).

f = The fractional portion of the year over which the dose is applicable.

The dose from shoreline sediment sample media is calculated as:

$$R_{apj} = \sum_{i} [C_{is} (U)(4E+4)(0.3)(D_{aipj}) f]$$

Where:

R_{apj} = The total annual dose to organ j, of an individual of age group a, from nuclide i, via the sediment pathway p, in mrem per year.

C_{is} = The concentration of radionuclide i in shoreline sediment in pCi/gram.

U = The usage factor, (hr/yr) (Reg. Guide 1.109).

4E+4 = The product of the assumed density of shoreline sediment (40 kilogram per square meter to a depth of 2.5 cm) times the number of grams per kilogram.

0.3 = The shore width factor for a lake.

D_{aipj} = The dose factor for age group a, nuclide i, sediment pathway s, and organ j. (Reg. Guide 1.109, Table E-6)(mrem/hr per pCi/m^2).

f = The fractional portion of the year over which the dose is applicable.

3.2 Evaluation of Doses From Gaseous Effluents

For the evaluation of doses to real members of the public from gaseous effluents, the pathways contained in section II-2.2.2.3 of the ODCM will be considered. These include the deposition, inhalation cows milk, goats milk, meat, and food products (vegetation). However, any updated field data may be utilized that concerns locations of real individuals, real time meteorological data, location of critical receptors, etc. Data from the most recent census and sample location surveys should be utilized. Doses may also be calculated from actual environmental sample media, as available. Environmental sample media data such as TLD, air sample, milk sample and vegetable (food crop) sample data may be utilized in lieu of effluent calculational data.

Doses to member of the public from the pathways contained in ODCM section II-2.2.2.3 as a result of gaseous effluents will be calculated using the dose factors of Regulatory Guide 1.109 or the methodology of the ODCM, as applicable. Doses calculated from environmental sample media will be based on the methodologies found in Regulatory Guide 1.109.

3.3 Evaluation of Doses From Direct Radiation

The dose contribution as a result of direct radiation shall be considered when evaluating whether the dose limitations of 40 CFR 190 have been exceeded.

Direct radiation doses as a result of the reactor, turbine and radwaste buildings, the Independent Spent Fuel Storage Installation (ISFSI), and outside radioactive storage tanks (as applicable) may be evaluated by engineering calculations or by evaluating environmental TLD results at critical receptor locations, site boundary or other special interest locations. For the evaluation of direct radiation doses utilizing environmental TLDs, the critical receptor in question, such as the critical residence, etc., will be compared to the control locations. The comparison involves the difference in environmental TLD results between the receptor location and the average control location result.

3.4 Doses to Members of the Public Within the Site Boundary

The Radioactive Effluent Release Report shall include an assessment of the radiation doses from radioactive liquid and gaseous effluents to members of the public due to their activities inside the site boundary as defined by Figure 5.1-1 of the Technical Specifications. A member of the public, as defined in Part I, would be represented by an individual who visits the site's Energy Center for the purpose of observing the educational displays or for picnicking and associated activities.

Fishing is a major recreational activity in the area and on the Site as a result of the salmonoid and trout populations in Lake Ontario. Fishermen have been observed fishing at the shoreline near the Energy Center from April through December in all weather conditions. Thus, fishing is the major activity performed by members of the public within the site boundary. Based on the nature of the fishermen and undocumented observations, it is conservatively assumed that the maximum exposed individual spends an average of 8 hours per week fishing from the shoreline at a location between the Energy Center and the Unit 1 facility. This estimate is considered conservative but not necessarily excessive and accounts for occasions where individuals may fish more on weekends or on a few days in March of the year.

The pathways considered for the evaluation include the inhalation pathway, the ground dose pathway with the resultant whole body and skin dose and the direct radiation dose pathway with the associated whole body dose. The direct radiation dose pathway, in actuality, includes several pathways. These include: the direct radiation gamma dose to an individual from an overhead plume, a gamma submersion plume dose (as applicable), possible direct radiation dose from the facility (including the on-site ISFSI) and a ground plane dose (deposition). Because the location is in close proximity to the site, any beta plume submersion dose is felt to be insignificant.

Other pathways, such as the ingestion pathway, are not applicable since these doses are included under calculations for doses to members of the public outside of the site boundary. In addition, pathways associated with water related recreational activities, other than fishing, are not applicable here. These include swimming, boating and wading which are prohibited at the facility.

3.4 Doses to Members of the Public Within the Site Boundary (Cont'd)

The inhalation pathway is evaluated by identifying the applicable radionuclides (radioiodine, tritium and particulates) in the effluent for the appropriate time period. The radionuclide concentrations are then multiplied by the appropriate X/Q value, inhalation dose factor, air intake rate, and the fractional portion of the year in question. Thus, the inhalation pathway is evaluated using the following equation adapted from Regulatory Guide 1.109. Table 3-23 presents the reference for the parameters used in the following equation.

NOTE: The following equation is adapted from equations C-3 and C-4 of Regulatory Guide 1.109. Since many of the factors are in units of pCi/m^3, m^3/sec., etc., and since the radionuclide decay expressions have been deleted because of the short distance to the receptor location, the equation presented here is not identical to the Regulatory Guide equations.

$$D_{ja} = \sum_i [(C_i)F\,(X/Q)(DFA)_{ija}(BR)_a t]$$

Where:

D_{ja} = The maximum dose from all nuclides to the organ j and age group (a) in mrem/yr.

C_i = The average concentration in the stack release of nuclide i for the period in pCi/m^3.

F = Unit 1 average stack flowrate in m^3/sec.

X/Q = The plume dispersion parameter for a location approximately 0.50 miles west of NMP-1; the plume dispersion parameter is 8.9E-06 sec/m^3 (stack) and was obtained from the C.T. Main five year average annual X/Q tables. The stack (elevated) X/Q is conservative when based on 0.50 miles because of the close proximity of the stack and the receptor location.

$(DFA)_{ija}$ = The dose factor for nuclide i, organ j, and age group a in mrem per pCi (Reg. Guide 1.109, Table E-7).

$(BR)_a$ = Annual air intake for individuals in age group a in m^3 per year (obtained from Table E-5 of Regulatory Guide 1.109).

t = Fractional portion of the year for which radionuclide i was detected and for which a dose is to be calculated (in years).

3.4 Doses to Members of the Public Within the Site Boundary (Cont'd)

The ground dose pathway (deposition) will be evaluated by obtaining at least one soil or shoreline sediment sample in the area where fishing occurs. The dose will then be calculated using the sample results, the time period in question, and the methodology based on Regulatory Guide 1.109 as presented in Section II-3.1. The resultant dose may be adjusted for a background dose by subtracting the applicable off-site control soil or shoreline sediment sample radionuclide activities. In the event it is noted that fishing is not performed from the shoreline, but is instead performed in the water (i.e., the use of waders), then the ground dose pathway (deposition) may not be evaluated.

The direct radiation gamma dose pathway includes any gamma doses from an overhead plume, potential submersion in the plume, possible direct radiation from the facility (including the on-site ISFSI) and ground plane dose (deposition). This general pathway will be evaluated by average environmental TLD readings. At least two environmental TLDs will be utilized at one location in the approximate area where fishing occurs. The TLDs will be placed in the field on approximately the beginning of a calendar quarter and removed on approximately the end of the calendar quarter. For the purposes of this evaluation, TLD data from quarters 2, 3, and 4 will be utilized.

The average TLD readings will be adjusted by the average control TLD readings. This is accomplished by subtracting the average quarterly control TLD value from the average fishing location TLD value. The applicable quarterly control TLD values will be utilized after adjusting for the appropriate time period (as applicable). In the event of loss or theft of the TLDs, results from a TLD or TLDs in a nearby area may be utilized.

4.0 ENVIRONMENTAL MONITORING PROGRAM

4.1 Sampling Stations

The current sampling locations are specified in Table 5-1 and Figures 5.1-1, 5.1-2. The meteorological tower is shown in Figure 5.1-1. The location is shown as TLD location 17. The Radiological Environmental Monitoring Program is a joint effort between the owners and operators of the Nine Mile Point Unit 1 and the James A. FitzPatrick Nuclear Power Plant. Sampling locations are chosen on the basis of historical average dispersion or deposition parameters from both units. The environmental sampling location coordinates shown on Table 5-1 are based on the NMP-2 reactor centerline.

The average dispersion and deposition parameters have been calculated for a 5 year period, 1978 through 1982. These average dispersion or deposition parameters for the site are used to compare results of the annual land use census.

If it is determined that sample locations required by Part I are unavailable or new locations are identified that yield a significantly higher (e.g. 50%) calculated D/Q value, actions will be taken as required by Controls DLCO 3.6.20 and DLCO 3.6.22, and the Radiological Environmental Monitoring program updated accordingly.

4.2 Interlaboratory Comparison Program

Analyses shall be performed on samples containing known quantities of radioactive materials that are supplied as part of a Commission approved or sponsored Interlaboratory Comparison Program, such as the EPA Crosscheck Program. Participation shall be only for those media, e.g., air, milk, water, etc., that are included in the Nine Mile Point Environmental Monitoring Program and for which crosscheck samples are available. An attempt will be made to obtain a QC sample to program sample ratio of 5% or better. The site identification symbol or the actual Quality Control sample results shall be reported in the Annual Radiological Environmental Operating Report so that the Commission staff may evaluate the results.

Specific sample media for which EPA Cross Check Program samples are available include the following:

- gross beta in air particulate filters
- gamma emitters in air particulate filters
- gamma emitters in milk
- gamma emitters in water
- tritium in water
- I-131 in water

4.3 Capabilities for Thermoluninescent Dosimeters Used for Environmental Measurements

Required detection capabilities for thermoluminescent dosimeters used for environmental measurements required by Table D 4.6.20-1, footnote b of Part I are based on ANSI Standard N545, section 4.3. TLDs are defined as phosphors packaged for field use. In regard to the detection capabilities for thermoluminescent dosimeters, only one determination is required to evaluate the above capabilities per type of TLD. Furthermore, the above capabilities may be determined by the vendor who supplies the TLDs. Required detection capabilities are as follows:

4.3.1 Uniformity shall be determined by giving TLDs from the same batch an exposure equal to that resulting from an exposure rate of 10 mR/hr during the field cycle. The responses obtained shall have a relative standard deviation of less than 7.5%. A total of at least 5 TLDs shall be evaluated.

4.3.2 Reproducibility shall be determined by giving TLDs repeated exposures equal to that resulting from an exposure rate of 10 uR/hr during the field cycle. The average of the relative standard deviations of the responses shall be less than 3.0%. A total of at least 4 TLDs shall be evaluated.

4.3.3 Dependence of exposure interpretation on the length of a field cycle shall be examined by placing TLDs for a period equal to at least a field cycle and a period equal to half the same field cycle in an area where the exposure rate is known to be constant. This test shall be conducted under approximate average winter temperatures and approximate average summer temperatures. For these tests, the ratio of the response obtained in the field cycle to twice that obtained for half the field cycle shall not be less than 0.85. At least 6 TLDs shall be evaluated.

4.3.4 Energy dependence shall be evaluated by the response of TLDs to photons for several energies between approximately 30 keV and 3 MeV. The response shall not differ from that obtained with the calibration source by more than 25% for photons with energies greater than 80 keV and shall not be enhanced by more than a factor of two for photons with energies less than 80 keV. A total of at least 8 TLDs shall be evaluated.

4.3.5 The directional dependence of the TLD response shall be determined by comparing the response of the TLD exposed in the routine orientation with respect to the calibration source with the response obtained for different orientations. To accomplish this, the TLD shall be rotated through at least two perpendicular planes. The response averaged over all directions shall not differ from the response obtained in the standard calibration position by more than 10%. A total of at least 4 TLDs shall be evaluated.

4.3.6 Light dependence shall be determined by placing TLDs in the field for a period equal to the field cycle under the four conditions found in ANSI N545, section 4.3.6. The results obtained for the unwrapped TLDs shall not differ from those obtained for the TLDs wrapped in aluminum foil by more than 10%. A total of at least 4 TLDs shall be evaluated for each of the four conditions.

4.3.7 Moisture dependence shall be determined by placing TLDs (that is, the phosphors packaged for field use) for a period equal to the field cycle in an area where the exposure rate is known to be constant. The TLDs shall be exposed under two conditions: (1) packaged in a thin, sealed plastic bag, and (2) packaged in a thin, sealed plastic bag with sufficient water to yield observable moisture throughout the field cycle. The TLD or phosphor, as appropriate, shall be dried before readout. The response of the TLD exposed in the plastic bag containing water shall not differ from that exposed in the regular plastic bag by more than 10%. A total of at least 4 TLDs shall be evaluated for each condition.

4.3.8 Self irradiation shall be determined by placing TLDs for a period equal to the field cycle in an area where the exposure rate is less than 10 uR/hr and the exposure during the field cycle is known. If necessary, corrections shall be applied for the dependence of exposure interpretation on the length of the field cycle (ANSI N545, section 4.3.3). The average exposure inferred from the responses of the TLDs shall not differ from the known exposure by more than an exposure equal to that resulting from an exposure rate of 10 uR/hr during the field cycle. A total of at least 3 TLDs shall be evaluated.

TABLE 1-1

Average Energy Per Disintegration

ISOTOPE	$\bar{E}_\gamma$mev/dis	(Ref)	$E_\beta$mev/dis[4]	(Ref)
Ar-41	1.294	(3)	0.464	(3)
Kr-83m	0.00248	(1)	0.0371	(1)
Kr-85	0.0022	(1)	0.250	(1)
Kr-85m	0.159	(1)	0.253	(1)
Kr-87	0.793	(1)	1.32	(1)
Kr-88	1.95	(1)	0.377	(1)
Kr-89	2.22	(2)	1.37	(2)
Kr-90	2.10	(2)	1.01	(2)
Xe-131m	0.0201	(1)	0.143	(1)
Xe-133	0.0454	(1)	0.135	(1)
Xe-133m	0.042	(1)	0.19	(1)
Xe-135	0.247	(1)	0.317	(1)
Xe-135m	0.432	(1)	0.095	(1)
Xe-137	0.194	(1)	1.64	(1)
Xe-138	1.18	(1)	0.611	(1)

(1) ORNL-4923, Radioactive Atoms - Supplement I, M.S. Martin, November 1973.

(2) NEDO-12037, "Summary of Gamma and Beta Emitters and Intensity Data"; M.E. Meek, R.S. Gilbert, January 1970. (The average energy was computed from the maximum energy using the ICRP II equation, not the 1/3 value assumption used in this reference).

(3) NCRP Report No. 58, "A Handbook of Radioactivity Measurements Procedures"; 1978

(4) The average energy includes conversion electrons.

TABLE 2-1
A_{iat} VALUES - LIQUID*
RADWASTE TANK
INFANT
mrem - ml
hr - µCi

NUCLIDE	BONE	LIVER	T BODY	THYROID	KIDNEY	LUNG	GI-TRACT
H3	--	2.90E-1	2.90E-1	2.90E-1	2.90E-1	2.90E-1	2.90E-1
Cr 51	--	--	1.29E-2	8.39E-3	1.83E-3	1.63E-2	3.75E-1
Cu 64	--	1.13E-1	5.23E-2	--	1.91E-1	--	2.32
Mn 54	--	1.87E+1	4.23	--	4.14	--	6.86
Fe 55	1.31E+1	8.44	2.26	--	--	4.13	1.07
Fe 59	2.84E+1	4.96E+1	1.96E+1	--	--	1.47E+1	2.37E+1
Co 58	--	3.34	8.34	--	--	--	8.33
Co 60	--	1.02E+1	2.40E+1	--	--	--	2.42E+1
Zn 65	1.72E+1	5.91E+1	2.73E+1	--	2.87E+1	--	5.00E+1
Sr 89	2.32E+3	--	6.66E+1	--	--	--	4.77E+1
Sr 90	1.74E+4	--	4.43E+3	--	--	--	2.17E+2
Zr 95	1.91E-1	4.66E-2	3.30E-2	--	5.02E-2	--	2.32E+1
Mn 56	--	2.40E-4	4.15E-5	--	2.07E-4	--	2.18E-2
Mo 99	--	2.34E+1	4.57	--	3.50E+1	--	7.71
Na 24	2.37	2.37	2.37	2.37	2.37	2.37	2.37
I 131	3.03E+1	3.57E+1	1.57E+1	1.17E+4	4.17E+1	--	1.28
I 133	4.22	6.15	1.80	1.12E+3	7.23	--	1.04
Ni 65	1.33E-3	1.51E-4	6.85E-5	--	--	--	1.15E-2
I 132	1.58E-4	3.21E-4	1.14E-4	1.50E-2	3.58E-4	--	2.60E-4
Cs 134	3.54E+2	6.60E+2	6.67E+1	--	1.70E+2	6.97E+1	1.79
Cs 136	4.05E+1	1.19E+2	4.45E+1	--	4.75E+1	9.71E+1	1.81
Cs 137	4.91E+2	5.75E+2	4.07E+1	--	1.54E+2	6.24E+1	1.80
Ba 140	1.50E+2	1.50E-1	7.74	--	3.57E-2	9.23E-2	3.69E+1
Ce 141	7.21E-2	4.40E-2	5.17E-3	--	1.36E-2	--	2.27E+1
Nb 95	3.85E-2	1.59E-2	9.18E-3	--	1.14E-2	--	1.34E+1
La 140	1.18E-2	4.67E-3	1.20E-3	--	--	--	5.48E+1
Ce 144	2.79	1.14	1.57E-1	--	4.62E-1	--	1.60E+2

* Calculated in accordance with NUREG 0133, Section 4.3.1; and Regulatory Guide 1.109, Regulatory position C, Section 1.

TABLE 2-2
A_{iat} VALUES - LIQUID*
RADWASTE TANK
CHILD
mrem - ml
hr - µCi

NUCLIDE	BONE	LIVER	T BODY	THYROID	KIDNEY	LUNG	GI-TRACT
H3	--	4.39E-1	4.39E-1	4.39E-1	4.39E-1	4.39E-1	4.39E-1
Cr 51	2.13E-2	2.13E-2	1.40	7.86E-1	2.30E-1	1.42	7.31E+1
Cu 64	2.51E-6	2.70	1.63	2.51E-6	6.52	2.51E-6	1.27E+2
Mn 54	6.92	3.38E+3	9.06E+2	6.92	9.53E+2	6.92	2.84E+3
Fe 55	9.21E+2	4.88E+2	1.51E+2	--	--	2.76E+2	9.05E+1
Fe 59	1.30E+3	2.11E+3	1.05E+3	1.34	1.34	6.12E+2	2.19E+3
Co 58	1.89	7.46E+1	2.24E+2	1.89	1.89	1.89	4.26E+2
Co 60	1.12E+2	3.28E+2	7.48E+2	1.12E+2	1.12E+2	1.12E+2	1.31E+3
Zn 65	2.15E+4	5.73E+4	3.56E+4	3.85	3.61E+4	3.85	1.01E+4
Sr 89	3.26E+4	1.10E-4	9.32E+2	1.10E-4	1.10E-4	1.10E-4	1.26E+3
Sr 90	4.26E+5	--	1.08E+5	--	--	--	5.74E+3
Zr 95	1.70	1.33	1.32	1.23	1.38	1.23	1.08E+2
Mn 56	--	1.65E-1	3.73E-2	--	2.00E-1	--	2.39E+1
Mo 99	5.35E-3	9.57E+1	2.37E+1	5.35E-3	2.04E+2	5.35E-3	7.91E+1
Na 24	1.52E+2	1.52E+2	1.52E+2	1.52E+2	1.52E+2	1.52E+2	1.52E+2
I 131	2.09E+2	2.10E+2	1.19E+2	6.94E+4	3.45E+2	5.60E-2	1.87E+1
I 133	3.39E+1	4.19E+1	1.59E+1	7.78E+3	6.98E+1	1.38E-4	1.69E+1
Ni 65	2.67E-1	2.51E-2	1.47E-2	--	--	--	3.08
I 132	6.13E-3	1.13E-2	5.18E-3	5.22E-1	1.72E-2	--	1.32E-2
Cs 134	3.68E+5	6.04E+5	1.27E+5	3.54E+1	1.87E+5	6.72E+4	3.29E+3
Cs 136	3.52E+4	9.67E+4	6.26E+4	6.21E-1	5.15E+4	7.68E+3	3.40E+3
Cs 137	5.15E+5	4.93E+5	7.28E+4	5.37E+1	1.61E+5	5.78E+4	3.14E+3
Ba 140	3.61E+2	3.96E-1	2.11E+1	7.96E-2	1.82E-1	2.68E-1	1.83E+2
Ce 141	1.50E-1	1.07E-1	6.99E-2	6.34E-2	8.24E-2	6.34E-2	5.40E+1
Nb 95	5.21E+2	2.03E+2	1.45E+2	6.39E-1	1.91E+2	6.39E-1	3.75E+5
La 140	1.50E-1	5.93E-2	2.68E-2	1.03E-2	1.03E-2	1.03E-2	1.36E+3
Ce 144	5.00	1.81	6.06E-1	3.58E-1	1.16	3.58E-1	3.80E+2

* Calculated in accordance with NUREG 0133, Section 4.3.1; and Regulatory Guide 1.109, Regulatory position C, Section 1.

TABLE 2-3
A_{iat} VALUES - LIQUID*
RADWASTE TANK
TEEN
mrem - ml
hr - µCi

NUCLIDE	BONE	LIVER	T BODY	THYROID	KIDNEY	LUNG	GI-TRACT
H3	--	3.28E-1	3.28E-1	3.28E-1	3.28E-1	3.28E-1	3.28E-1
Cr 51	1.02E-1	1.02E-1	1.39	8.16E-1	3.84E-1	1.94	2.16E+2
Cu 64	1.20E-5	2.89	1.36	1.20E-5	7.32	1.20E-5	2.24E+2
Mn 54	3.31E+1	4.34E+3	8.87E+2	3.31E+1	1.32E+3	3.31E+1	8.86E+3
Fe 55	6.94E+2	4.92E+2	1.15E+2	--	--	3.12E+2	2.13E+2
Fe 59	1.07E+3	2.49E+3	9.64E+2	6.41	6.41	7.89E+2	5.87E+3
Co 58	9.03	9.82E+1	2.15E+2	9.03	9.03	9.03	1.24E+3
Co 60	5.36E+2	7.96E+2	1.12E+3	5.36E+2	5.36E+2	5.36E+2	3.93E+3
Zn 65	2.10E+4	7.28E+4	3.40E+4	1.84E+1	4.66E+4	1.84E+1	3.08E+4
Sr 89	2.44E+4	5.24E-4	6.98E+2	5.24E-4	5.24E-4	5.24E-4	2.90E+3
Sr 90	4.66E+5	--	1.15E+5	--	--	--	1.31E+4
Zr 95	6.20	6.00	5.97	5.90	6.04	5.90	2.28E+2
Mn 56	--	1.81E-1	3.22E-2	--	2.29E-1	--	1.19E+1
Mo 99	2.56E-2	9.22E+1	1.76E+1	2.56E-2	2.11E+2	2.56E-2	1.65E+2
Na 24	1.39E+2	1.39E+2	1.39E+2	1.39E+2	1.39E+2	1.39E+2	1.39E+2
I 131	1.55E+2	2.17E+2	1.16E+2	6.31E+4	3.73E+2	2.68E-1	4.30E+1
I 133	2.53E+1	4.29E+1	1.31E+1	5.99E+3	7.52E+1	6.60E-4	3.25E+1
Ni 65	2.08E-1	2.66E-2	1.21E-2	--	--	--	1.44
I 132	4.90E-2	1.28E-2	4.60E-3	4.32E-1	2.02E-2	--	5.59E-3
Cs 134	3.05E+5	7.18E+5	3.33E+5	1.69E+2	2.28E+5	8.73E+4	9.10E+3
Cs 136	2.98E+4	1.17E+5	7.88E+4	2.97	6.38E+4	1.01E+4	9.44E+3
Cs 137	4.09E+5	5.44E+5	1.90E+5	2.57E+2	1.85E+5	7.21E+4	7.99E+3
Ba 140	2.35E+2	4.10E-1	1.55E+1	3.81E-1	4.79E-1	5.75E-1	3.63E+2
Ce 141	3.46E-1	3.32E-1	3.07E-1	3.04E-1	3.17E-1	3.04E-1	8.16E+1
Nb 95	4.44E+2	2.48E+2	1.18E+2	3.06	2.40E+2	3.06	1.05E+6
La 140	1.57E-1	1.02E-1	6.35E-2	4.94E-2	4.94E-2	4.94E-2	3.05E+3
Ce 144	3.99	2.65	1.83	1.71	2.27	1.71	5.74E+2

* Calculated in accordance with NUREG 0133, Section 4.3.1; and Regulatory Guide 1.109, Regulatory position C, Section 1.

TABLE 2-4
A_{iat} VALUES - LIQUID*
RADWASTE TANK
ADULT
mrem - ml
hr - µCi

NUCLIDE	BONE	LIVER	T BODY	THYROID	KIDNEY	LUNG	GI-TRACT
H3	--	4.45E-1	4.45E-1	4.45E-1	4.45E-1	4.45E-1	4.45E-1
Cr 51	1.82E-2	1.82E-2	1.27	7.64E-1	2.93E-1	1.67	3.14E+2
Cu 64	--	2.75	1.29	--	6.94	--	2.35E+2
Mn 54	5.94	4.38E+3	8.41E+2	5.94	1.31E+3	5.94	1.34E+4
Fe 55	6.64E+2	4.58E+2	1.07E+2	--	--	2.56E+2	2.63E+2
Fe 59	1.03E+3	2.43E+3	9.31E+2	1.15	1.15	6.79E+2	8.09E+3
Co 58	1.62	9.15E+1	2.03E+2	1.62	1.62	1.62	1.82E+3
Co 60	9.60E+1	3.57E+2	6.71E+2	9.60E+1	9.60E+1	9.60E+1	4.99E+3
Zn 65	2.31E+4	7.36E+4	3.32E+4	3.30	4.92E+4	3.30	4.63E+4
Sr 89	2.25E+4	9.39E-5	6.45E+2	9.39E-5	9.39E-5	9.39E-5	3.60E+3
Sr 90	5.60E+5	--	1.37E+5	--	--	--	1.62E+4
Zr 95	1.36	1.15	1.12	1.06	1.21	1.06	3.06E+2
Mn 56	--	1.73E-1	3.07E-2	--	2.20E-1	--	5.52
Mo 99	4.58E-3	8.70E+1	1.66E+1	4.58E-3	1.97E+2	4.58E-3	2.02E+2
Na 24	1.35E+2	1.35E+2	1.35E+2	1.35E+2	1.35E+2	1.35E+2	1.35E+2
I 131	1.45E+2	2.07E+2	1.19E+2	6.79E+4	3.55E+2	4.80E-2	5.47E+1
I 133	2.35E+1	4.09E+1	1.25E+1	6.02E+3	7.14E+1	1.18E-4	3.68E+1
Ni 65	1.93E-1	2.51E-2	1.14E-2	--	--	--	6.36E-1
I 132	4.68E-3	1.25E-2	4.38E-3	4.38E-1	2.00E-2	--	2.35E-3
Cs 134	2.98E+5	7.08E+5	5.79E+5	3.03E+1	2.29E+5	7.61E+4	1.24E+4
Cs 136	2.96E+4	1.17E+5	8.42E+4	5.32E-1	6.51E+4	8.93E+3	1.33E+4
Cs 137	3.82E+5	5.22E+5	3.42E+5	4.60E+1	1.77E+5	5.90E+4	1.02E+4
Ba 140	2.24E+2	3.49E-1	1.47E+1	6.83E-2	1.64E-1	2.29E-1	4.61E+2
Ce 141	9.53E-2	8.20E-2	5.75E-2	5.44E-2	6.72E-2	5.44E-2	1.06E+2
Nb 95	4.39E+2	2.44E+2	1.32E+2	5.47E-1	2.41E+2	5.47E-1	1.48E+6
La 140	1.11E-1	6.03E-2	2.24E-2	8.84E-3	8.84E-3	8.84E-3	3.78E+3
Ce 144	2.48	1.22	4.24E-1	3.07E-1	8.47E-1	3.07E-1	7.37E+2

* Calculated in accordance with NUREG 0133, Section 4.3.1; and Regulatory Guide 1.109, Regulatory position C, Section 1.

TABLE 2-5
A_{iat} VALUES - LIQUID*
EMERGENCY CONDENSER VENT
INFANT
mrem - ml
hr - µCi

NUCLIDE	BONE	LIVER	T BODY	THYROID	KIDNEY	LUNG	GI-TRACT
H3	--	7.43E-4	7.43E-4	7.43E-4	7.43E-4	7.43E-4	7.43E-4
Cr 51	--	--	3.30E-5	2.15E-5	4.70E-6	4.18E-5	9.61E-4
Cu 64	--	2.89E-4	1.34E-4	--	4.89E-4	--	5.94E-3
Mn 54	--	4.79E-2	1.08E-2	--	1.06E-2	--	1.76E-2
Fe 55	3.35E-2	2.16E-2	5.78E-3	--	--	1.06E-2	2.75E-3
Fe 59	7.29E-2	1.27E-1	5.02E-2	--	--	3.76E-2	6.08E-2
Co 58	--	8.58E-3	2.14E-2	--	--	--	2.14E-2
Co 60	--	2.60E-2	6.15E-2	--	--	--	6.19E-2
Zn 65	4.42E-2	1.52E-1	6.99E-2	--	7.35E-2	--	1.28E-1
Sr 89	5.95	--	1.71E-1	--	--	--	1.22E-1
Sr 90	4.46E+1	--	1.14E+1	--	--	--	5.57E-1
Zr 95	4.90E-4	1.19E-4	8.47E-5	--	1.29E-4	--	5.95E-2
Mn 56	--	6.17E-7	1.06E-7	--	5.30E-7	--	5.60E-5
Mo 99	--	6.00E-2	1.17E-2	--	8.97E-2	--	1.98E-2
Na 24	6.07E-3	6.07E-3	6.07E-3	6.07E-3	6.07E-3	6.07E-3	6.07E-3
I 131	7.77E-2	9.16E-2	4.03E-2	3.01E+1	1.07E-1	--	3.27E-3
I 133	1.08E-2	1.58E-2	4.62E-3	2.87	1.85E-2	--	2.67E-3
Ni 65	3.41E-6	3.86E-7	1.76E-7	--	--	--	2.94E-5
I 132	4.05E-7	8.22E-7	2.93E-7	3.85E-5	9.17E-7	--	6.66E-7
Cs 134	9.08E-1	1.69	1.71E-1	--	4.36E-1	1.79E-1	4.60E-3
Cs 136	1.04E-1	3.06E-1	1.14E-1	--	1.22E-1	2.49E-2	4.64E-3
Cs 137	1.26	1.47	1.04E-1	--	3.95E-1	1.60E-1	4.61E-3
Ba 140	3.85E-1	3.85E-4	1.99E-2	--	9.15E-5	2.37E-4	9.47E-2
Ce 141	1.85E-4	1.13E-4	1.33E-5	--	3.48E-5	--	5.82E-2
Nb 95	9.88E-5	4.07E-5	2.35E-5	--	2.92E-5	--	3.43E-2
La 140	3.03E-5	1.20E-5	3.08E-6	--	--	--	1.41E-1
Ce 144	7.16E-3	2.93E-3	4.02E-4	--	1.19E-3	--	4.11E-1

* Calculated in accordance with NUREG 0133, Section 4.3.1; and Regulatory Guide 1.109, Regulatory position C, Section 1.

TABLE 2-6
A_{iat} VALUES - LIQUID*
EMERGENCY CONDENSER VENT
CHILD
mrem - ml
hr - µCi

NUCLIDE	BONE	LIVER	T BODY	THYROID	KIDNEY	LUNG	GI-TRACT
H3	--	1.44E-1	1.44E-1	1.44E-1	1.44E-1	1.44E-1	1.44E-1
Cr 51	3.78E-5	3.78E-5	1.37	7.58E-1	2.07E-1	1.38	7.24E+1
Cu 64	--	2.63	1.59	--	6.35	--	1.23E+2
Mn 54	1.23E-2	3.36E+3	8.95E+2	1.23E-2	9.42E+2	1.23E-2	2.82E+3
Fe 55	9.04E+2	4.79E+2	1.49E+2	--	--	2.71E+2	8.88E+1
Fe 59	1.28E+3	2.07E+3	1.03E+3	2.38E-3	2.38E-3	6.00E+2	2.15E+3
Co 58	3.36E-3	7.01E+1	2.15E+2	3.36E-3	3.36E-3	3.36E-3	4.09E+2
Co 60	1.99E-1	2.08E+2	6.14E+2	1.99E-1	1.99E-1	1.99E-1	1.15E+3
Zn 65	2.15E+4	5.73E+4	3.56E+4	6.84E-3	3.61E+4	6.84E-3	1.01E+4
Sr 89	3.07E+4	--	8.78E+2	--	--	--	1.19E+3
Sr 90	4.01E+5	--	1.02E+5	--	--	--	5.40E+3
Zr 95	3.01E-1	6.78E-2	6.06E-2	2.19E-3	9.61E-2	2.19E-3	6.84E+1
Mn 56	--	1.65E-1	3.73E-2	--	2.00E-1	--	2.39E+1
Mo 99	--	8.16E+1	2.02E+1	--	1.74E+2	--	6.75E+1
Na 24	1.50E+2	1.50E+2	1.50E+2	1.50E+2	1.50E+2	1.50E+2	1.50E+2
I 131	1.86E+2	1.87E+2	1.06E+2	6.19E+4	3.08E+2	--	1.67E+1
I 133	3.08E+1	3.81E+1	1.44E+1	7.07E+3	6.35E+1	--	1.53E+1
Ni 65	2.66E-1	2.50E-2	1.46E-2	--	--	--	3.07
I 132	6.01E-3	1.10E-2	5.08E-3	5.12E-1	1.69E-2	--	1.30E-2
Cs 134	3.68E+5	6.04E+5	1.27E+5	6.29E-2	1.87E+5	6.71E+4	3.25E+3
Cs 136	3.51E+4	9.66E+4	6.25E+4	1.10E-3	5.14E+4	7.67E+3	3.40E+3
Cs 137	5.14E+5	4.92E+5	7.27E+4	9.55E-2	1.60E+5	5.77E+4	3.08E+3
Ba 140	2.48E+2	2.17E-1	1.45E+1	1.42E-4	7.09E-2	1.30E-1	1.26E+2
Ce 141	3.08E-2	1.54E-2	2.39E-3	1.13E-4	6.83E-3	1.13E-4	1.91E+1
Nb 95	5.21E+2	2.03E+2	1.45E+2	1.14E-3	1.90E+2	1.14E-3	3.75E+5
La 140	1.31E-1	4.59E-2	1.55E-2	1.83E-5	1.83E-5	1.83E-5	1.28E+3
Ce 144	1.64	5.15E-1	8.81E-2	6.36E-4	2.85E-1	6.36E-4	1.34E+2

* Calculated in accordance with NUREG 0133, Section 4.3.1; and Regulatory Guide 1.109, Regulatory position C, Section 1.

TABLE 2-7
A_{iat} VALUES - LIQUID*
EMERGENCY CONDENSER VENT
TEEN
mrem - ml
hr - µCi

NUCLIDE	BONE	LIVER	T BODY	THYROID	KIDNEY	LUNG	GI-TRACT
H3	--	1.74E-1	1.74E-1	1.74E-1	1.74E-1	1.74E-1	1.74E-1
Cr 51	1.81E-4	1.81E-4	1.28	7.12E-1	2.81E-1	1.83	2.15E+2
Cu 64	--	2.86	1.35	--	7.24	--	2.22E+2
Mn 54	5.89E-2	4.29E+3	8.52E+2	5.89E-2	1.28E+3	5.89E-2	8.81E+3
Fe 55	6.89E+2	4.88E+2	1.14E+2	--	--	3.10E+2	2.11E+2
Fe 59	1.05E+3	2.46E+3	9.50E+2	1.14E-2	1.14E-2	7.76E+2	5.82E+3
Co 58	1.61E-2	8.78E+1	2.02E+2	1.61E-2	1.61E-2	1.61E-2	1.21E+3
Co 60	9.53E-1	2.57E+2	5.78E+2	9.53E-1	9.53E-1	9.53E-1	3.34E+3
Zn 65	2.10E+4	7.28E+4	3.39E+4	3.28E-2	4.66E+4	3.28E-2	3.08E+4
Sr 89	2.38E+4	--	6.81E+2	--	--	--	2.83E+3
Sr 90	4.54E+5	--	1.12E+5	--	--	--	1.27E+4
Zr 95	2.56E-1	8.80E-2	6.38E-2	1.05E-2	1.24E-1	1.05E-2	1.79E+2
Mn 56	--	1.81E-1	3.22E-2	--	2.29E-1	--	1.19E+1
Mo 99	--	8.57E+1	1.63E+1	--	1.96E+2	--	1.54E+2
Na 24	1.38E+2	1.38E+2	1.38E+2	1.38E+2	1.38E+2	1.38E+2	1.38E+2
I 131	1.47E+2	2.06E+2	1.10E+2	6.00E+4	3.54E+2	4.77E-4	4.07E+1
I 133	2.42E+1	4.11E+1	1.25E+1	5.74E+3	7.21E+1	--	3.11E+1
Ni 65	2.08E-1	2.66E-2	1.21E-2	--	--	--	1.44
I 132	4.86E-3	1.27E-2	4.56E-3	4.29E-1	2.00E-2	--	5.54E-3
Cs 134	3.05E+5	7.18E+5	3.33E+5	3.01E-1	2.28E+5	8.71E+4	8.93E+3
Cs 136	2.98E+4	1.17E+5	7.87E+4	5.28E-3	6.38E+4	1.01E+4	9.43E+3
Cs 137	4.09E+5	5.44E+5	1.89E+5	4.57E-1	1.85E+5	7.19E+4	7.73E+3
Ba 140	1.96E+2	2.47E-2	1.27E+1	6.77E-4	8.23E-2	1.62E-1	3.03E+2
Ce 141	2.43E-2	1.64E-2	2.36E-3	5.40E-4	8.02E-3	5.40E-4	4.54E+1
Nb 95	4.41E+2	2.45E+2	1.15E+2	5.43E-3	2.37E+2	5.43E-3	1.05E+6
La 140	1.05E-1	5.17E-2	1.38E-2	8.78E-5	8.78E-5	8.78E-5	2.96E+3
Ce 144	1.27	5.28E-1	7.12E-2	3.04E-3	3.17E-1	3.04E-3	3.19E+2

* Calculated in accordance with NUREG 0133, Section 4.3.1; and Regulatory Guide 1.109, Regulatory position C, Section 1.

TABLE 2-8
A_{iat} VALUES - LIQUID*
EMERGENCY CONDENSER VENT
ADULT
mrem - ml
hr - μCi

NUCLIDE	BONE	LIVER	T BODY	THYROID	KIDNEY	LUNG	GI-TRACT
H3	--	2.27E-1	2.27E-1	2.27E-1	2.27E-1	2.27E-1	2.27E-1
Cr 51	3.24E-5	3.24E-5	1.24	7.43E-1	2.74E-1	1.65	3.12E+2
Cu 64	--	2.72	1.28	--	6.86	--	2.32E+2
Mn 54	1.06E-2	4.37E+3	8.33E+2	1.06E-2	1.30E+3	1.06E-2	1.34E+4
Fe 55	6.58E+2	4.55E+2	1.06E+2	--	--	2.54E+2	2.61E+2
Fe 59	1.02E+3	2.41E+3	9.22E+2	2.04E-3	2.04E-3	6.72E+2	8.02E+3
Co 58	2.88E-3	8.83E+1	1.98E+2	2.88E-3	2.88E-3	2.88E-3	1.79E+3
Co 60	1.71E-1	2.56E+2	5.65E+2	1.71E-1	1.71E-1	1.71E-1	4.81E+3
Zn 65	2.31E+4	7.36E+4	3.32E+4	5.87E-3	4.92E+4	5.87E-3	4.63E+4
Sr 89	2.18E+4	--	6.27E+2	--	--	--	3.50E+3
Sr 90	5.44E+5	--	1.34E+5	--	--	--	1.57E+4
Zr 95	2.40E-1	7.81E-2	5.35E-2	1.88E-3	1.22E-1	1.88E-3	2.42E+2
Mn 56	--	1.73E-1	3.07E-2	--	2.20E-1	--	5.52
Mo 99	--	8.04E+1	1.53E+1	--	1.82E+2	--	1.86E+2
Na 24	1.34E+2	1.34E+2	1.34E+2	1.34E+2	1.34E+2	1.34E+2	1.34E+2
I 131	1.37E+2	1.96E+2	1.12E+2	6.43E+4	3.36E+2	--	5.17E+1
I 133	2.25E+1	3.91E+1	1.19E+1	5.75E+3	6.82E+1	--	3.51E+1
Ni 65	1.93E-1	2.50E-2	1.14E-2	--	--	--	6.36E-1
I 132	4.64E-3	1.24E-2	4.34E-3	4.34E-1	1.98E-2	--	2.33E-3
Cs 134	2.98E+5	7.08E+5	5.79E+5	5.39E-2	2.29E+5	7.61E+4	1.24E+4
Cs 136	2.96E+4	1.17E+5	8.42E+4	9.46E-4	6.51E+4	8.92E+3	1.33E+4
Cs 137	3.82E+5	5.22E+5	3.42E+5	8.19E-2	1.77E+5	5.89E+4	1.01E+4
Ba 140	1.84E+2	2.32E-1	1.21E+1	1.21E-4	7.88E-2	1.33E-1	3.79E+2
Ce 141	2.21E-2	1.50E-2	1.78E-3	9.67E-5	7.00E-3	9.67E-5	5.68E+1
Nb 95	4.38E+2	2.44E+2	1.31E+2	9.73E-4	2.41E+2	9.73E-4	1.48E+6
La 140	9.90E-2	4.99E-2	1.32E-2	1.57E-5	1.57E-5	1.57E-5	3.66E+3
Ce 144	1.17	4.89E-1	6.33E-2	5.45E-4	2.90E-1	5.45E-4	3.95E+2

* Calculated in accordance with NUREG 0133, Section 4.3.1; and Regulatory Guide 1.109, Regulatory position C, Section 1.

TABLE 3-1
Critical Receptor Dispersion Parameters[a]
For Ground Level and Elevated Releases

LOCATION	DIR	MILES	ELEVATED X/Q (sec/m^3)	ELEVATED D/Q (m^{-2})	GROUND[e] X/Q(sec/m^3)	GROUND[e] D/Q (m^{-2})
Residences	E (98°)	1.4	1.8 E-07[b]	5.2 E-09[b]	4.02 E-07	8.58 E-09
Dairy Cows[f]	SE (130°)	2.6	2.2 E-08[c]	7.0 E-10[c]	6.00 E-08	1.64 E-09
Milk Goats[f]	SE (130°)	2.6	2.2 E-08[c]	7.0 E-10[c]	6.00 E-08	1.64 E-09
Meat Animals	ESE (115°)	1.8	5.1 E-08[c]	1.7 E-09[c]	1.16 E-07	3.54 E-09
Gardens	E (97°)	1.8	1.0 E-07[c]	3.5 E-09[c]	2.53 E-07	5.55 E-09
Site Boundary	ENE (67°)	0.4	2.4 E-06[b,d]	4.4 E-08[c,d]	6.63 E-06	6.35 E-08

a. These values will be used in dose calculations beginning in April 1986 but may be revised periodically to account for changes in locations of farms, gardens or critical residences.

b. Values based on 5 year annual meteorological data (C.T. Main, Rev. 2)

c. Values based on 5 year average grazing season meteorological data (C.T. Main Rev. 2)

d. Values are based on most restrictive X/Q land-based sector (ENE). (C.T. Main, Rev. 2)

e. Values are based on average annual meteorological data for the year 1985.

f. Conservative location based on past dairy cow and goat milk history.

TABLE 3-2

Gamma Air and Whole Body Plume Shine Dose Factors*
For
Noble Gases

Nuclide	Gamma Air B_i mrad/yr / µCi/sec	Gamma Whole Body V_i mrem/yr / µCi/sec
Kr-85	2.23E-6	--
Kr-85m	1.75E-3	1.68E-3
Kr-87	1.02E-2	9.65E-3
Kr-88	2.23E-2	2.17E-2
Kr-89	2.50E-2	1.71E-2
Kr-83m	2.26E-6	--
Xe-133	2.91E-4	1.75E-4
Xe-133m	2.27E-4	1.87E-4
Xe-135	2.62E-3	2.50E-3
Xe-135m	5.20E-3	4.89E-3
Xe-137	2.30E-3	2.20E-3
Xe-138	1.54E-2	1.03E-2
Xe-131m	1.74E-5	1.47E-6
Ar-41	1.64E-2	1.57E-2

* Calculated in accordance with Regulatory Guide 1.109. (See Appendix B.)

TABLE 3-3

IMMERSION DOSE FACTORS FOR NOBLE GASES*

Nuclide	K_i(γ-Body)**	L_i(β-Skin)**	M_i(γ-Air)***	N_i(β-Air)***
Kr 83m	7.56E-02	---	1.93E1	2.88E2
Kr 85m	1.17E3	1.46E3	1.23E3	1.97E3
Kr 85	1.61E1	1.34E3	1.72E1	1.95E3
Kr 87	5.92E3	9.73E3	6.17E3	1.03E4
Kr 88	1.47E4	2.37E3	1.52E4	2.93E3
Kr 89	1.66E4	1.01E4	1.73E4	1.06E4
Kr 90	1.56E4	7.29E3	1.63E4	7.83E3
Xe 131m	9.15E1	4.76E2	1.56E2	1.11E3
Xe 133m	2.51E2	9.94E2	3.27E2	1.48E3
Xe 133	2.94E2	3.06E2	3.53E2	1.05E3
Xe 135m	3.12E3	7.11E2	3.36E3	7.39E2
Xe 135	1.81E3	1.86E3	1.92E3	2.46E3
Xe 137	1.42E3	1.22E4	1.51E3	1.27E4
Xe 138	8.83E3	4.13E3	9.21E3	4.75E3
Ar 41	8.84E3	2.69E3	9.30E3	3.28E3

* From, Table B-1.Regulatory Guide 1.109 Rev. 1

** mrem/yr per $\mu Ci/m^3$.

*** mrad/yr per $\mu Ci/m^3$.

TABLE 3-4
DOSE AND DOSE RATE
R_i VALUES - INHALATION - INFANT[1]
mrem/yr
µCi/m³

NUCLIDE	BONE	LIVER	T BODY	THYROID	KIDNEY	LUNG	GI-LLI
H 3	--	6.47E2	6.47E2	6.47E2	6.47E2	6.47E2	6.47E2
C 14	2.65E4	5.31E3	5.31E3	5.31E3	5.31E3	5.31E3	5.31E3
Cr 51	--	--	8.95E1	5.75E1	1.32E1	1.28E4	3.57E2
Mn 54	--	2.53E4	4.98E3	--	4.98E3	1.00E6	7.06E3
Fe 55	1.97E4	1.17E4	3.33E3	--	--	8.69E4	1.09E3
Fe 59	1.36E4	2.35E4	9.48E3	--	--	1.02E6	2.48E4
Co 58	--	1.22E3	1.82E3	--	--	7.77E5	1.11E4
Co 60	--	8.02E3	1.18E4	--	--	4.51E6	3.19E4
Zn 65	1.93E4	6.26E4	3.11E4	--	3.25E4	6.47E5	5.14E4
Sr 89	3.98E5	--	1.14E4	--	--	2.03E6	6.40E4
Sr 90	4.09E7	--	2.59E6	--	--	1.12E7	1.31E5
Zr 95	1.15E5	2.79E4	2.03E4	--	3.11E4	1.75E6	2.17E4
Nb 95	1.57E4	6.43E3	3.78E3	--	4.72E3	4.79E5	1.27E4
Mo 99	--	1.65E2	3.23E1	--	2.65E2	1.35E5	4.87E4
I-131	3.79E4	4.44E4	1.96E4	1.48E7	5.18E4	--	1.06E3
I 133	1.32E4	1.92E4	5.60E3	3.56E6	2.24E4	--	2.16E3
Cs 134	3.96E5	7.03E5	7.45E4	--	1.90E5	7.97E4	1.33E3
Cs 137	5.49E5	6.12E5	4.55E4	--	1.72E5	7.13E4	1.33E3
Ba 140	5.60E4	5.60E1	2.90E3	--	1.34E1	1.60E6	3.84E4
La 140	5.05E2	2.00E2	5.15E1	--	--	1.68E5	8.48E4
Ce 141	2.77E4	1.67E4	1.99E3	--	5.25E3	5.17E5	2.16E4
Ce 144	3.19E6	1.21E6	1.76E5	--	5.38E5	9.84E6	1.48E5
Nd 147	7.94E3	8.13E3	5.00E2	--	3.15E3	3.22E5	3.12E4

[1] This and following R_i Tables Calculated in accordance with NUREG 0133, Section 5.3.1, except C 14 values in accordance with Regulatory Guide 1.109 Equation C-8.

TABLE 3-5
DOSE AND DOSE RATE
R_i VALUES - INHALATION - CHILD
mrem/yr
µCi/m³

NUCLIDE	BONE	LIVER	T BODY	THYROID	KIDNEY	LUNG	GI-LLI
H 3	--	1.12E3	1.12E3	1.12E3	1.12E3	1.12E3	1.12E3
C 14	3.59E4	6.73E3	6.73E3	6.73E3	6.73E3	6.73E3	6.73E3
Cr 51	--	--	1.54E2	8.55E1	2.43E1	1.70E4	1.08E3
Mn 54	--	4.29E4	9.51E3	--	1.00E4	1.58E6	2.29E4
Fe 55	4.74E4	2.52E4	7.77E3	--	--	1.11E5	2.87E3
Fe 59	2.07E4	3.34E4	1.67E4	--	--	1.27E6	7.07E4
Co 58	--	1.77E3	3.16E3	--	--	1.11E6	3.44E4
Co 60	--	1.31E4	2.26E4	--	--	7.07E6	9.62E4
Zn 65	4.26E4	1.13E5	7.03E4	--	7.14E4	9.95E5	1.63E4
Sr 89	5.99E5	--	1.72E4	--	--	2.16E6	1.67E5
Sr 90	1.01E8	--	6.44E6	--	--	1.48E7	3.43E5
Zr 95	1.90E5	4.18E4	3.70E4	--	5.96E4	2.23E6	6.11E4
Nb 95	2.35E4	9.18E3	6.55E3	--	8.62E3	6.14E5	3.70E4
Mo 99	--	1.72E2	4.26E1	--	3.92E2	1.35E5	1.27E5
I 131	4.81E4	4.81E4	2.73E4	1.62E7	7.88E4	--	2.84E3
I 133	1.66E4	2.03E4	7.70E3	3.85E6	3.38E4	--	5.48E3
Cs 134	6.51E5	1.01E6	2.25E5	--	3.30E5	1.21E5	3.85E3
Cs 137	9.07E5	8.25E5	1.28E5	--	2.82E5	1.04E5	3.62E3
Ba 140	7.40E4	6.48E1	4.33E3	--	2.11E1	1.74E6	1.02E5
La 140	6.44E2	2.25E2	7.55E1	--	--	1.83E5	2.26E5
Ce 141	3.92E4	1.95E4	2.90E3	--	8.55E3	5.44E5	5.66E4
Ce 144	6.77E6	2.12E6	3.61E5	--	1.17E6	1.20E7	3.89E5
Nd 147	1.08E4	8.73E3	6.81E2	--	4.81E3	3.28E5	8.21E4

TABLE 3-6
DOSE AND DOSE RATE
R_i VALUES - INHALATION - TEEN
mrem/yr
µCi/m³

NUCLIDE	BONE	LIVER	T BODY	THYROID	KIDNEY	LUNG	GI-LLI
H 3	--	1.27E3	1.27E3	1.27E3	1.27E3	1.27E3	1.27E3
C 14	2.60E3	4.87E3	4.87E3	4.87E3	4.87E3	4.87E3	4.87E3
Cr 51	--	--	1.35E2	7.50E1	3.07E1	2.10E4	3.00E3
Mn 54	--	5.11E4	8.40E3	--	1.27E4	1.98E6	6.68E4
Fe 55	3.34E4	2.38E4	5.54E3	--	--	1.24E5	6.39E3
Fe 59	1.59E4	3.70E4	1.43E4	--	--	1.53E6	1.78E5
Co 58	--	2.07E3	2.78E3	--	--	1.34E6	9.52E4
Co 60	--	1.51E4	1.98E4	--	--	8.72E6	2.59E5
Zn 65	3.86E4	1.34E5	6.24E4	--	8.64E4	1.24E6	4.66E4
Sr 89	4.34E5	--	1.25E4	--	--	2.42E6	3.71E5
Sr 90	1.08E8	--	6.68E6	--	--	1.65E7	7.65E5
Zr 95	1.46E5	4.58E4	3.15E4	--	6.74E4	2.69E6	1.49E5
Nb 95	1.86E4	1.03E4	5.66E3	--	1.00E4	7.51E5	9.68E4
Mo 99	--	1.69E2	3.22E1	--	4.11E2	1.54E5	2.69E5
I 131	3.54E4	4.91E4	2.64E4	1.46E7	8.40E4	--	6.49E3
I 133	1.22E4	2.05E4	6.22E3	2.92E6	3.59E4	--	1.03E4
Cs 134	5.02E5	1.13E6	5.49E5	--	3.75E5	1.46E5	9.76E3
Cs 137	6.70E5	8.48E5	3.11E5	--	3.04E5	1.21E5	8.48E3
Ba 140	5.47E4	6.70E1	3.52E3	--	2.28E1	2.03E6	2.29E5
La 140	4.79E2	2.36E2	6.26E1	--	--	2.14E5	4.87E5
Ce 141	2.84E4	1.90E4	2.17E3	--	8.88E3	6.14E5	1.26E5
Ce 144	4.89E6	2.02E6	2.62E5	--	1.21E6	1.34E7	8.64E5
Nd 147	7.86E3	8.56E3	5.13E2	--	5.02E3	3.72E5	1.82E5

TABLE 3-7
DOSE AND DOSE RATE
R_i VALUES - INHALATION - ADULT
$\frac{mrem/yr}{\mu Ci/m^3}$

NUCLIDE	BONE	LIVER	T BODY	THYROID	KIDNEY	LUNG	GI-LLI
H 3	--	1.26E3	1.26E3	1.26E3	1.26E3	1.26E3	1.26E3
C 14	1.82E4	3.41E3	3.41E3	3.41E3	3.41E3	3.41E3	3.41E3
Cr 51	--	--	1.00E2	5.95E1	2.28E1	1.44E4	3.32E3
Mn 54	--	3.96E4	6.30E3	--	9.84E3	1.40E6	7.74E4
Fe 55	2.46E4	1.70E4	3.94E3	--	--	7.21E4	6.03E3
Fe 59	1.18E5	2.78E4	1.06E4	--	--	1.02E6	1.88E5
Co 58	--	1.58E3	2.07E3	--	--	9.28E5	1.06E5
Co 60	--	1.15E4	1.48E4	--	--	5.97E6	2.85E5
Zn 65	3.24E4	1.03E5	4.66E4	--	6.90E4	8.64E5	5.34E4
Sr 89	3.04E5	--	8.72E3	--	--	1.40E6	3.50E5
Sr 90	9.92E7	--	6.10E6	--	--	9.60E6	7.22E5
Zr 95	1.07E5	3.44E4	2.33E4	--	5.42E4	1.77E6	1.50E5
Nb 95	1.41E4	7.82E3	4.21E3	--	7.74E3	5.05E5	1.04E5
Mo 99	--	1.21E2	2.30E1	--	2.91E2	9.12E4	2.48E5
I 131	2.52E4	3.58E4	2.05E4	1.19E7	6.13E4	--	6.28E3
I 133	8.64E3	1.48E4	4.52E3	2.15E6	2.58E4	--	8.88E3
Cs 134	3.73E5	8.48E5	7.28E5	--	2.87E5	9.76E4	1.04E4
Cs 137	4.78E5	6.21E5	4.28E5	--	2.22E5	7.52E4	8.40E3
Ba 140	3.90E4	4.90E1	2.57E3	--	1.67E1	1.27E6	2.18E5
La 140	3.44E2	1.74E2	4.58E1	--	--	1.36E5	4.58E5
Ce 141	1.99E4	1.35E4	1.53E3	--	6.26E3	3.62E5	1.20E5
Ce 144	3.43E6	1.43E6	1.84E5	--	8.48E5	7.78E6	8.16E5
Nd 147	5.27E3	6.10E3	3.65E2	--	3.56E3	2.21E5	1.73E5

TABLE 3-8
DOSE AND DOSE RATE
R_i VALUES - GROUND PLANE
ALL AGE GROUPS
m^2-mrem/yr
µCi/sec

NUCLIDE	TOTAL BODY	SKIN
H 3	--	--
C 14	--	--
Cr 51	4.65E6	5.50E6
Mn 54	1.40E9	1.64E9
Fe 55	--	--
Fe 59	2.73E8	3.20E8
Co 58	3.80E8	4.45E8
Co 60	2.15E10	2.53E10
Zn 65	7.46E8	8.57E8
Sr 89	2.16E4	2.51E4
Sr 90	--	--
Zr 95	2.45E8	2.85E8
Nb 95	1.36E8	1.61E8
Mo 99	3.99E6	4.63E6
I 131	1.72E7	2.09E7
I 133	2.39E6	2.91E6
Cs 134	6.83E9	7.97E9
Cs 137	1.03E10	1.20E10
Ba 140	2.05E7	2.35E7
La 140	1.92E7	2.18E7
Ce 141	1.37E7	1.54E7
Ce 144	6.96E7	8.07E7
Nd 147	8.46E6	1.01E7

TABLE 3-9
DOSE AND DOSE RATE
R_i VALUES - COW MILK - INFANT
m^2-mrem/yr
µCi/sec

NUCLIDE	BONE	LIVER	T BODY	THYROID	KIDNEY	LUNG	GI LLI
H 3*	--	2.38E3	2.38E3	2.38E3	2.38E3	2.38E3	2.38E3
C 14*	3.23E6	6.89E5	6.89E5	6.89E5	6.89E5	6.89E5	6.89E5
Cr 51	--	--	8.35E4	5.45E4	1.19E4	1.06E5	2.43E6
Mn 54	--	2.51E7	5.68E6	--	5.56E6	--	9.21E6
Fe 55	8.43E7	5.44E7	1.45E7	--	--	2.66E7	6.91E6
Fe 59	1.22E8	2.13E8	8.38E7	--	--	6.29E7	1.02E8
Co 58	--	1.39E7	3.46E7	--	--	--	3.46E7
Co 60	--	5.90E7	1.39E8	--	--	--	1.40E8
Zn 65	3.53E9	1.21E10	5.58E9	--	5.87E9	--	1.02E10
Sr 89	6.93E9	--	1.99E8	--	--	--	1.42E8
Sr 90	8.19E10	--	2.09E10	--	--	--	1.02E9
Zr 95	3.85E3	9.39E2	6.66E2	--	1.01E3	--	4.68E5
Nb 95	4.21E5	1.64E5	1.17E5	--	1.54E5	--	3.03E8
Mo 99	--	1.04E8	2.03E7	--	1.55E8	--	3.43E7
I 131	6.81E8	8.02E8	3.53E8	2.64E11	9.37E8	--	2.86E7
I 133	8.52E6	1.24E7	3.63E6	2.26E9	1.46E7	--	2.10E6
Cs 134	2.41E10	4.49E10	4.54E9	--	1.16E10	4.74E9	1.22E8
Cs 137	3.47E10	4.06E10	2.88E9	--	1.09E10	4.41E9	1.27E8
Ba 140	1.21E8	1.21E5	6.22E6	--	2.87E4	7.42E4	2.97E7
La 140	2.03E1	7.99	2.06	--	--	--	9.39E4
Ce 141	2.28E4	1.39E4	1.64E3	--	4.28E3	--	7.18E6
Ce 144	1.49E6	6.10E5	8.34E4	--	2.46E5	--	8.54E7
Nd 147	4.43E2	4.55E2	2.79E1	--	1.76E2	--	2.89E5

*mrem/yr per µCi/m^3.

TABLE 3-10
DOSE AND DOSE RATE
R_i VALUES - COW MILK - CHILD
m^2-mrem/yr
µCi/sec

NUCLIDE	BONE	LIVER	T BODY	THYROID	KIDNEY	LUNG	GI-LLI
H 3*	--	1.57E3	1.57E3	1.57E3	1.57E3	1.57E3	1.57E3
C 14*	1.65E6	3.29E5	3.29E5	3.29E5	3.29E5	3.29E5	3.29E5
Cr 51	--	--	5.27E4	2.93E4	7.99E3	5.34E4	2.80E6
Mn 54	--	1.35E7	3.59E6	--	3.78E6	--	1.13E7
Fe 55	6.97E7	3.07E7	1.15E7	--	--	2.09E7	6.85E6
Fe 59	6.52E7	1.06E8	5.26E7	--	--	3.06E7	1.10E8
Co 58	--	6.94E6	2.13E7	--	--	--	4.05E7
Co 60	--	2.89E7	8.52E7	--	--	--	1.60E8
Zn 65	2.63E9	7.00E9	4.35E9	--	4.41E9	--	1.23E9
Sr 89	3.64E9	--	1.04E8	--	--	--	1.41E8
Sr 90	7.53E10	--	1.91E10	--	--	--	1.01E9
Zr 95	2.17E3	4.77E2	4.25E2	--	6.83E2	--	4.98E5
Nb 95	1.86E5	1.03E4	5.69E4	--	1.00E5	--	4.42E8
Mo 99	--	4.07E7	1.01E7	--	8.69E7	--	3.37E7
I 131	3.26E8	3.28E8	1.86E8	1.08E11	5.39E8	--	2.92E7
I 133	4.04E6	4.99E6	1.89E6	9.27E8	8.32E6	--	2.01E6
Cs 134	1.50E10	2.45E10	5.18E9	--	7.61E9	2.73E9	1.32E8
Cs 137	2.17E10	2.08E10	3.07E9	--	6.78E9	2.44E9	1.30E8
Ba 140	5.87E7	5.14E4	3.43E6	--	1.67E4	3.07E4	2.97E7
La 140	9.70	3.39	1.14	--	--	--	9.45E4
Ce 141	1.15E4	5.73E3	8.51E2	--	2.51E3	--	7.15E6
Ce 144	1.04E6	3.26E5	5.55E4	--	1.80E5	--	8.49E7
Nd 147	2.24E2	1.81E2	1.40E1	--	9.94E1	--	2.87E5

*mrem/yr per µCi/m^3.

TABLE 3-11
DOSE AND DOSE RATE
R_i VALUES - COW MILK - TEEN
m^2-mrem/yr
µCi/sec

NUCLIDE	BONE	LIVER	T BODY	THYROID	KIDNEY	LUNG	GI-LLI
H 3*	--	9.94E2	9.94E2	9.94E2	9.94E2	9.94E2	9.94E2
C 14*	6.70E5	1.34E5	1.34E5	1.34E5	1.34E5	1.35E5	1.34E5
Cr 51	--	--	2.58E4	1.44E4	5.66E3	3.69E4	4.34E6
Mn 54	--	9.01E6	1.79E6	--	2.69E6	--	1.85E7
Fe 55	2.78E7	1.97E7	4.59E6	--	--	1.25E7	8.52E6
Fe 59	2.81E7	6.57E7	2.54E7	--	--	2.07E7	1.55E8
Co 58	--	4.55E6	1.05E7	--	--	--	6.27E7
Co 60	--	1.86E7	4.19E7	--	--	--	2.42E8
Zn 65	1.34E9	4.65E9	2.17E9	--	2.97E9	--	1.97E9
Sr 89	1.47E9	--	4.21E7	--	--	--	1.75E8
Sr 90	4.45E10	--	1.10E10	--	--	--	1.25E9
Zr 95	9.34E2	2.95E2	2.03E2	--	4.33E2	--	6.80E5
Nb 95	1.86E5	1.03E5	5.69E4	--	1.00E5	--	4.42E8
Mo 99	--	2.24E7	4.27E6	--	5.12E7	--	4.01E7
I 131	1.34E8	1.88E8	1.01E8	5.49E10	3.24E8	--	3.72E7
I 133	1.66E6	2.82E6	8.59E5	3.93E8	4.94E6	--	2.13E6
Cs 134	6.49E9	1.53E10	7.08E9	--	4.85E9	1.85E9	1.90E8
Cs 137	9.02E9	1.20E10	4.18E9	--	4.08E9	1.59E9	1.71E8
Ba 140	2.43E7	2.98E4	1.57E6	--	1.01E4	2.00E4	3.75E7
La 140	4.05	1.99	5.30E-1	--	--	--	1.14E5
Ce 141	4.67E3	3.12E3	3.58E2	--	1.47E3	--	8.91E6
Ce 144	4.22E5	1.74E5	2.27E4	--	1.04E5	--	1.06E8
Nd 147	9.12E1	9.91E1	5.94E0	--	5.82E1	--	3.58E5

*mrem/yr per µCi/m^3.

TABLE 3-12
DOSE AND DOSE RATE
R_i VALUES - COW MILK - ADULT
m^2-mrem/yr
µCi/sec

NUCLIDE	BONE	LIVER	T BODY	THYROID	KIDNEY	LUNG	GI-LLI
H 3*	--	7.63E2	7.63E2	7.63E2	7.63E2	7.63E2	7.63E2
C 14*	3.63E5	7.26E4	7.26E4	7.26E4	7.26E4	7.26E4	7.26E4
Cr 51	--	--	1.48E4	8.85E3	3.26E3	1.96E4	3.72E6
Mn 54	--	5.41E6	1.03E6	--	1.61E6	--	1.66E7
Fe 55	1.57E7	1.08E7	2.52E6	--	--	6.04E6	6.21E6
Fe 59	1.61E7	3.79E7	1.45E7	--	--	1.06E7	1.26E8
Co 58	--	2.70E6	6.05E6	--	--	--	5.47E7
Co 60	--	1.10E7	2.42E7	--	--	--	2.06E8
Zn 65	8.71E8	2.77E9	1.25E9	--	1.85E9	--	1.75E9
Sr 89	7.99E8	--	2.29E7	--	--	--	1.28E8
Sr 90	3.15E10	--	7.74E9	--	--	--	9.11E8
Zr 95	5.34E2	1.71E2	1.16E2	--	2.69E2	--	5.43E5
Nb 95	1.09E5	6.07E4	3.27E4	--	6.00E4	--	3.69E8
Mo 99	--	1.24E7	2.36E6	--	2.81E7	--	2.87E7
I 131	7.41E7	1.06E8	6.08E7	3.47E10	1.82E8	--	2.80E7
I 133	9.09E5	1.58E6	4.82E5	2.32E8	2.76E6	--	1.42E6
Cs 134	3.74E9	8.89E9	7.27E9	--	2.88E9	9.55E8	1.56E8
Cs 137	4.97E9	6.80E9	4.46E9	--	2.31E9	7.68E8	1.32E8
Ba 140	1.35E7	1.69E4	8.83E5	--	5.75E3	9.69E3	2.77E7
La 140	2.26	1.14	3.01E-1	--	--	--	8.35E4
Ce 141	2.54E3	1.72E3	1.95E2	--	7.99E2	--	6.58E6
Ce 144	2.29E5	9.58E4	1.23E4	--	5.68E4	--	7.74E7
Nd 147	4.74E1	5.48E1	3.28E0	--	3.20E1	--	2.63E5

*mrem/yr per µCi/m^3.

TABLE 3-13
DOSE AND DOSE RATE
R_i VALUES - GOAT MILK - INFANT
m^2-mrem/yr
µCi/sec

NUCLIDE	BONE	LIVER	T BODY	THYROID	KIDNEY	LUNG	GI-LLI
H 3*	--	6.33E3	6.33E3	6.33E3	6.33E3	6.33E3	6.33E3
C 14*	3.23E6	6.89E5	6.89E5	6.89E5	6.89E5	6.89E5	6.89E5
Cr 51	--	--	1.00E4	6.56E3	1.43E3	1.28E4	2.93E5
Mn 54	--	3.01E6	6.82E5	--	6.67E5	--	1.11E6
Fe 55	1.10E6	7.08E5	1.89E5	--	--	3.46E5	8.98E4
Fe 59	1.59E6	2.78E6	1.09E6	--	--	8.21E5	1.33E6
Co 58	--	1.67E6	4.16E6	--	--	--	4.16E6
Co 60	--	7.08E6	1.67E7	--	--	--	1.68E7
Zn 65	4.24E8	1.45E9	6.70E8	--	7.04E8	--	1.23E9
Sr 89	1.48E10	--	4.24E8	--	--	--	3.04E8
Sr 90	1.72E11	--	4.38E10	--	--	--	2.15E9
Zr 95	4.66E2	1.13E2	8.04E1	--	1.22E2	--	5.65E4
Nb 95	9.42E4	3.88E4	2.24E4	--	2.78E4	--	3.27E7
Mo 99	--	1.27E7	2.47E6	--	1.89E7	--	4.17E6
I 131	8.17E8	9.63E8	4.23E8	3.16E11	1.12E9	--	3.44E7
I 133	1.02E7	1.49E7	4.36E6	2.71E9	1.75E7	--	2.52E6
Cs 134	7.23E10	1.35E11	1.36E10	--	3.47E10	1.42E10	3.66E8
Cs 137	1.04E11	1.22E11	8.63E9	--	3.27E10	1.32E10	3.81E8
Ba 140	1.45E7	1.45E4	7.48E5	--	3.44E3	8.91E3	3.56E6
La 140	2.43E0	9.59E-1	2.47E-1	--	--	--	1.13E4
Ce 141	2.74E3	1.67E3	1.96E2	--	5.14E2	--	8.62E5
Ce 144	1.79E5	7.32E4	1.00E4	--	2.96E4	--	1.03E7
Nd 147	5.32E1	5.47E1	3.35E0	--	2.11E1	--	3.46E4

*mrem/yr per µCi/m^3.

TABLE 3-14
DOSE AND DOSE RATE
R_i VALUES - GOAT MILK - CHILD
m^2-mrem/yr
µCi/sec

NUCLIDE	BONE	LIVER	T BODY	THYROID	KIDNEY	LUNG	GI-LLI
H 3*	--	4.17E3	4.17E3	4.17E3	4.17E3	4.17E3	4.17E3
C 14*	1.65E6	3.29E5	3.29E5	3.29E5	3.29E5	3.29E5	3.29E5
Cr 51	--	--	6.34E3	3.52E3	9.62E2	6.43E3	3.36E5
Mn 54	--	1.62E6	4.31E5	--	4.54E5	--	1.36E6
Fe 55	9.06E5	4.81E5	1.49E5	--	--	2.72E5	8.91E4
Fe 59	8.52E5	1.38E6	6.86E5	--	--	3.99E5	1.43E6
Co 58	--	8.35E5	2.56E6	--	--	--	4.87E6
Co 60	--	3.47E6	1.02E7	--	--	--	1.92E7
Zn 65	3.15E8	8.40E8	5.23E8	--	5.29E8	--	1.48E8
Sr 89	7.77E9	--	2.22E8	--	--	--	3.01E8
Sr 90	1.58E11	--	4.01E10	--	--	--	2.13E9
Zr 95	2.62E2	5.76E1	5.13E1	--	8.25E1	--	6.01E4
Nb 95	5.05E4	1.96E4	1.40E4	--	1.85E4	--	3.63E7
Mo 99	--	4.95E6	1.22E6	--	1.06E7	--	4.09E6
I 131	3.91E8	3.94E8	2.24E8	1.30E11	6.46E8	--	3.50E7
I 133	4.84E6	5.99E6	2.27E6	1.11E9	9.98E6	--	2.41E6
Cs 134	4.49E10	7.37E10	1.55E10	--	2.28E10	8.19E9	3.97E8
Cs 137	6.52E10	6.24E10	9.21E9	--	2.03E10	7.32E9	3.91E8
Ba 140	7.05E6	6.18E3	4.12E5	--	2.01E3	3.68E3	3.57E6
La 140	1.16E0	4.07E-1	1.37E-1	--	--	--	1.13E4
Ce 141	1.38E3	6.88E2	1.02E2	--	3.02E2	--	8.59E5
Ce 144	1.25E5	3.91E4	6.66E3	--	2.16E4	--	1.02E7
Nd 147	2.68E1	2.17E1	1.68E0	--	1.19E1	--	3.44E4

*mrem/yr per µCi/m^3.

TABLE 3-15
DOSE AND DOSE RATE
R_i VALUES - GOAT MILK - TEEN
m^2-mrem/yr
µCi/sec

NUCLIDE	BONE	LIVER	T BODY	THYROID	KIDNEY	LUNG	GI-LLI
H 3*	--	2.64E3	2.64E3	2.64E3	2.64E3	2.64E3	2.64E3
C 14*	6.70E5	1.34E5	1.34E5	1.34E5	1.34E5	1.35E5	1.34E5
Cr 51	--	--	3.11E3	1.73E3	6.82E2	4.44E3	5.23E5
Mn 54	--	1.08E6	2.15E5	--	3.23E5	--	2.22E6
Fe 55	3.61E5	2.56E5	5.97E4	--	--	1.62E5	1.11E5
Fe 59	3.67E5	8.57E5	3.31E5	--	--	2.70E5	2.03E6
Co 58	--	5.46E5	1.26E6	--	--	--	7.53E6
Co 60	--	2.23E6	5.03E6	--	--	--	2.91E7
Zn 65	1.61E8	5.58E8	2.60E8	--	3.57E8	--	2.36E8
Sr 89	3.14E9	--	8.99E7	--	--	--	3.74E8
Sr 90	9.36E10	--	2.31E10	--	--	--	2.63E9
Zr 95	1.13E2	3.56E1	2.45E1	--	5.23E1	--	8.22E4
Nb 95	2.23E4	1.24E4	6.82E3	--	1.20E4	--	5.30E7
Mo 99	--	2.72E6	5.19E5	--	6.23E6	--	4.87E6
I 131	1.61E8	2.26E8	1.21E8	6.59E10	3.89E8	--	4.47E7
I 133	1.99E6	3.38E6	1.03E6	4.72E8	5.93E6	--	2.56E6
Cs 134	1.95E10	4.58E10	2.13E10	--	1.46E10	5.56E9	5.70E8
Cs 137	2.71E10	3.60E10	1.25E10	--	1.23E10	4.76E9	5.12E8
Ba 140	2.92E6	3.58E3	1.88E5	--	1.21E3	2.41E3	4.50E6
La 140	4.86E-1	2.39E-1	6.36E-2	--	--	--	1.37E4
Ce 141	5.60E2	3.74E2	4.30E1	--	1.76E2	--	1.07E6
Ce 144	5.06E4	2.09E4	2.72E3	--	1.25E4	--	1.27E7
Nd 147	1.09E1	1.19E1	7.13E-1	--	6.99E0	--	4.29E4

*mrem/yr per µCi/m^3.

TABLE 3-16
DOSE AND DOSE RATE
R_i VALUES - GOAT MILK - ADULT
m^2-mrem/yr
µCi/sec

NUCLIDE	BONE	LIVER	T BODY	THYROID	KIDNEY	LUNG	GI-LLI
H 3*	--	2.03E3	2.03E3	2.03E3	2.03E3	2.03E3	2.03E3
C 14*	3.63E5	7.26E4	7.26E4	7.26E4	7.26E4	7.26E4	7.26E4
Cr 51	--	--	1.78E3	1.06E3	3.92E2	2.36E3	4.48E5
Mn 54	--	6.50E5	1.24E5	--	1.93E5	--	1.99E6
Fe 55	2.04E5	1.41E5	3.28E4	--	--	7.85E4	8.07E4
Fe 59	2.10E5	4.95E5	1.90E5	--	--	1.38E5	1.65E6
Co 58	--	3.25E5	7.27E5	--	--	--	6.58E6
Co 60	--	1.32E6	2.91E6	--	--	--	2.48E7
Zn 65	1.05E8	3.33E8	1.51E8	--	2.23E8	--	2.10E8
Sr 89	1.70E9	--	4.89E7	--	--	--	2.73E8
Sr 90	6.62E10	--	1.63E10	--	--	--	1.91E9
Zr 95	6.45E1	2.07E1	1.40E1	--	3.25E1	--	6.56E4
Nb 95	1.31E4	7.29E3	3.92E3	--	7.21E3	--	4.42E7
Mo 99	--	1.51E6	2.87E5	--	3.41E6	--	3.49E6
I 131	8.89E7	1.27E8	7.29E7	4.17E10	2.18E8	--	3.36E7
I 133	1.09E6	1.90E6	5.79E5	2.79E8	3.31E6	--	1.71E6
Cs 134	1.12E10	2.67E10	2.18E10	--	8.63E9	2.86E9	4.67E8
Cs 137	1.49E10	2.04E10	1.34E10	--	6.93E9	2.30E9	3.95E8
Ba 140	1.62E6	2.03E3	1.06E5	--	6.91E2	1.16E3	3.33E6
La 140	2.71E-1	1.36E-1	3.61E-2	--	--	--	1.00E4
Ce 141	3.06E2	2.07E2	2.34E1	--	9.60E1	--	7.90E5
Ce 144	2.75E4	1.15E4	1.48E3	--	6.82E3	--	9.30E6
Nd 147	5.69E0	6.57E0	3.93E-1	--	3.84E0	--	3.15E4

*mrem/yr per µCi/m^3.

TABLE 3-17
DOSE AND DOSE RATE
R_i VALUES - COW MEAT - CHILD
m^2-mrem/yr
µCi/sec

NUCLIDE	BONE	LIVER	T BODY	THYROID	KIDNEY	LUNG	GI-LLI
H 3*	--	2.34E2	2.34E2	2.34E2	2.34E2	2.34E2	2.34E2
C 14*	5.29E5	1.06E5	1.06E5	1.06E5	1.06E5	1.06E5	1.06E5
Cr 51	--	--	4.55E3	2.52E3	6.90E2	4.61E3	2.41E5
Mn 54	--	5.15E6	1.37E6	--	1.44E6	--	4.32E6
Fe 55	2.89E8	1.53E8	4.74E7	--	--	8.66E7	2.84E7
Fe 59	2.04E8	3.30E8	1.65E8	--	--	9.58E7	3.44E8
Co 58	--	9.41E6	2.88E7	--	--	--	5.49E7
Co 60	--	4.64E7	1.37E8	--	--	--	2.57E8
Zn 65	2.38E8	6.35E8	3.95E8	--	4.00E8	--	1.12E8
Sr 89	2.65E8	--	7.57E6	--	--	--	1.03E7
Sr 90	7.01E9	--	1.78E9	--	--	--	9.44E7
Zr 95	1.51E6	3.32E5	2.95E5	--	4.75E5	--	3.46E8
Nb 95	4.10E6	1.59E6	1.14E6	--	1.50E6	--	2.95E9
Mo 99	--	5.42E4	1.34E4	--	1.16E5	--	4.48E4
I 131	4.15E6	4.18E6	2.37E6	1.38E9	6.86E6	--	3.72E5
I 133	9.38E-2	1.16E-1	4.39E-2	2.15E1	1.93E-1	--	4.67E-2
Cs 134	6.09E8	1.00E9	2.11E8	--	3.10E8	1.11E8	5.39E6
Cs 137	8.99E8	8.60E8	1.27E8	--	2.80E8	1.01E8	5.39E6
Ba 140	2.20E7	1.93E4	1.28E6	--	6.27E3	1.15E4	1.11E7
La 140	2.80E-2	9.78E-3	3.30E-3	--	--	--	2.73E2
Ce 141	1.17E4	5.82E3	8.64E2	--	2.55E3	--	7.26E6
Ce 144	1.48E6	4.65E5	7.91E4	--	2.57E5	--	1.21E8
Nd 147	5.93E3	4.80E3	3.72E2	--	2.64E3	--	7.61E6

*mrem/yr per µCi/m^3.

TABLE 3-18
DOSE AND DOSE RATE
R_i VALUES - COW MEAT - TEEN
m^2-mrem/yr
µCi/sec

NUCLIDE	BONE	LIVER	T BODY	THYROID	KIDNEY	LUNG	GI-LLI
H 3*	--	1.94E2	1.94E2	1.94E2	1.94E2	1.94E2	1.94E2
C 14*	2.81E5	5.62E4	5.62E4	5.62E4	5.62E4	5.62E4	5.62E4
Cr 51	--	--	2.93E3	1.62E3	6.39E2	4.16E3	4.90E5
Mn 54	--	4.50E6	8.93E5	--	1.34E6	--	9.24E6
Fe 55	1.50E8	1.07E8	2.49E7	--	--	6.77E7	4.62E7
Fe 59	1.15E8	2.69E8	1.04E8	--	--	8.47E7	6.36E8
Co 58	--	8.05E6	1.86E7	--	--	--	1.11E8
Co 60	--	3.90E7	8.80E7	--	--	--	5.09E8
Zn 65	1.59E8	5.52E8	2.57E8	--	3.53E8	--	2.34E8
Sr 89	1.40E8	--	4.01E6	--	--	--	1.67E7
Sr 90	5.42E9	--	1.34E9	--	--	--	1.52E8
Zr 95	8.50E5	2.68E5	1.84E5	--	3.94E5	--	6.19E8
Nb 95	2.37E6	1.32E6	7.24E5	--	1.28E6	--	5.63E9
Mo 99	--	3.90E4	7.43E3	--	8.92E4	--	6.98E4
I 131	2.24E6	3.13E6	1.68E6	9.15E8	5.40E6	--	6.20E5
I 133	5.05E-2	8.57E-2	2.61E-2	1.20E1	1.50E-1	--	6.48E-2
Cs 134	3.46E8	8.13E8	3.77E8	--	2.58E8	9.87E7	1.01E7
Cs 137	4.88E8	6.49E8	2.26E8	--	2.21E8	8.58E7	9.24E6
Ba 140	1.19E7	1.46E4	7.68E5	--	4.95E3	9.81E3	1.84E7
La 140	1.53E-2	7.51E-3	2.00E-3	--	--	--	4.31E2
Ce 141	6.19E3	4.14E3	4.75E2	--	1.95E3	--	1.18E7
Ce 144	7.87E5	3.26E5	4.23E4	--	1.94E5	--	1.98E8
Nd 147	3.16E3	3.44E3	2.06E2	--	2.02E3	--	1.24E7

*mrem/yr per µCi/m^3.

TABLE 3-19
DOSE AND DOSE RATE
R_i VALUES - COW MEAT - ADULT
m^2-mrem/yr
µCi/sec

NUCLIDE	BONE	LIVER	T BODY	THYROID	KIDNEY	LUNG	GI-LLI
H 3*	--	3.25E2	3.25E2	3.25E2	3.25E2	3.25E2	3.25E2
C 14*	3.33E5	6.66E4	6.66E4	6.66E4	6.66E4	6.66E4	6.66E4
Cr 51	--	--	3.65E3	2.18E3	8.03E2	4.84E3	9.17E5
Mn 54	--	5.90E6	1.13E6	--	1.76E6	--	1.81E7
Fe 55	1.85E8	1.28E8	2.98E7	--	--	7.14E7	7.34E7
Fe 59	1.44E8	3.39E8	1.30E8	--	--	9.46E7	1.13E9
Co 58	--	1.04E7	2.34E7	--	--	--	2.12E8
Co 60	--	5.03E7	1.11E8	--	--	--	9.45E8
Zn 65	2.26E8	7.19E8	3.25E8	--	4.81E8	--	4.53E8
Sr 89	1.66E8	--	4.76E6	--	--	--	2.66E7
Sr 90	8.38E9	--	2.06E9	--	--	--	2.42E8
Zr 95	1.06E6	3.40E5	2.30E5	--	5.34E5	--	1.08E9
Nb 95	3.04E6	1.69E6	9.08E5	--	1.67E6	--	1.03E10
Mo 99	--	4.71E4	8.97E3	--	1.07E5	--	1.09E5
I 131	2.69E6	3.85E6	2.21E6	1.26E9	6.61E6	--	1.02E6
I 133	6.04E-2	1.05E-1	3.20E-2	1.54E1	1.83E-1	--	9.44E-2
Cs 134	4.35E8	1.03E9	8.45E8	--	3.35E8	1.11E8	1.81E7
Cs 137	5.88E8	8.04E8	5.26E8	--	2.73E8	9.07E7	1.56E7
Ba 140	1.44E7	1.81E4	9.44E5	--	6.15E3	1.04E4	2.97E7
La 140	1.86E-2	9.37E-3	2.48E-3	--	--	--	6.88E2
Ce 141	7.38E3	4.99E3	5.66E2	--	2.32E3	--	1.91E7
Ce 144	9.33E5	3.90E5	5.01E4	--	2.31E5	--	3.16E8
Nd 147	3.59E3	4.15E3	2.48E2	--	2.42E3	--	1.99E7

*mrem/yr per µCi/m^3.

TABLE 3-20
DOSE AND DOSE RATE
R_i VALUES - VEGETATION - CHILD
m^2-mrem/yr
µCi/sec

NUCLIDE	BONE	LIVER	T BODY	THYROID	KIDNEY	LUNG	GI-LLI
H 3*	--	4.01E3	4.01E3	4.01E3	4.01E3	4.01E3	4.01E3
C 14*	3.50E6	7.01E5	7.01E5	7.01E5	7.01E5	7.01E5	7.01E5
Cr 51	--	--	1.17E5	6.49E4	1.77E4	1.18E5	6.20E6
Mn 54	--	6.65E8	1.77E8	--	1.86E8	--	5.58E8
Fe 55	7.63E8	4.05E8	1.25E8	--	--	2.29E8	7.50E7
Fe 59	3.97E8	6.42E8	3.20E8	--	--	1.86E8	6.69E8
Co 58	--	6.45E7	1.97E8	--	--	--	3.76E8
Co 60	--	3.78E8	1.12E9	--	--	--	2.10E9
Zn 65	8.12E8	2.16E9	1.35E9	--	1.36E9	--	3.80E8
Sr 89	3.59E10	--	1.03E9	--	--	--	1.39E9
Sr 90	1.24E12	--	3.15E11	--	--	--	1.67E10
Zr 95	3.86E6	8.50E5	7.56E5	--	1.22E6	--	8.86E8
Nb 95	1.02E6	3.99E5	2.85E5	--	3.75E5	--	7.37E8
Mo 99	--	7.70E6	1.91E6	--	1.65E7	--	6.37E6
I 131	7.16E7	7.20E7	4.09E7	2.38E10	1.18E8	--	6.41E6
I 133	1.69E6	2.09E6	7.92E5	3.89E8	3.49E6	--	8.44E5
Cs 134	1.60E10	2.63E10	5.55E9	--	8.15E9	2.93E9	1.42E8
Cs 137	2.39E10	2.29E10	3.38E9	--	7.46E9	2.68E9	1.43E8
Ba 140	2.77E8	2.43E5	1.62E7	--	7.90E4	1.45E5	1.40E8
La 140	3.25E3	1.13E3	3.83E2	--	--	--	3.16E7
Ce 141	6.56E5	3.27E5	4.85E4	--	1.43E5	--	4.08E8
Ce 144	1.27E8	3.98E7	6.78E6	--	2.21E7	--	1.04E10
Nd 147	7.23E4	5.86E4	4.54E3	--	3.22E4	--	9.28E7

*mrem/yr per µCi/m^3.

TABLE 3-21
DOSE AND DOSE RATE
R_i VALUES - VEGETATION - TEEN
m^2-mrem/yr
µCi/sec

NUCLIDE	BONE	LIVER	T BODY	THYROID	KIDNEY	LUNG	GI-LLI
H 3*	--	2.59E3	2.59E3	2.59E3	2.59E3	2.59E3	2.59E3
C 14*	1.45E6	2.91E5	2.91E5	2.91E5	2.91E5	2.91E5	2.91E5
Cr 51	--	--	6.16E4	3.42E4	1.35E4	8.79E4	1.03E7
Mn 54	--	4.54E8	9.01E7	--	1.36E8	--	9.32E8
Fe 55	3.10E8	2.20E8	5.13E7	--	--	1.40E8	9.53E7
Fe 59	1.79E8	4.18E8	1.61E8	--	--	1.32E8	9.89E8
Co 58	--	4.37E7	1.01E8	--	--	--	6.02E8
Co 60	--	2.49E8	5.60E8	--	--	--	3.24E9
Zn 65	4.24E8	1.47E9	6.86E8	--	9.41E8	--	6.23E8
Sr 89	1.51E10	--	4.33E8	--	--	--	1.80E9
Sr 90	7.51E11	--	1.85E11	--	--	--	2.11E10
Zr 95	1.72E6	5.44E5	3.74E5	--	7.99E5	--	1.26E9
Nb 95	4.80E5	2.66E5	1.46E5	--	2.58E5	--	1.14E9
Mo 99	--	5.64E6	1.08E6	--	1.29E7	--	1.01E7
I 131	3.85E7	5.39E7	2.89E7	1.57E10	9.28E7	--	1.07E7
I 133	9.29E5	1.58E6	4.80E5	2.20E8	2.76E6	--	1.19E6
Cs 134	7.10E9	1.67E10	7.75E9	--	5.31E9	2.03E9	2.08E8
Cs 137	1.01E10	1.35E10	4.69E9	--	4.59E9	1.78E9	1.92E8
Ba 140	1.38E8	1.69E5	8.91E6	--	5.74E4	1.14E5	2.13E8
La 140	1.81E3	8.88E2	2.36E2	--	--	--	5.10E7
Ce 141	2.83E5	1.89E5	2.17E4	--	8.89E4	--	5.40E8
Ce 144	5.27E7	2.18E7	2.83E6	--	1.30E7	--	1.33E10
Nd 147	3.66E4	3.98E4	2.38E3	--	2.34E4	--	1.44E8

*mrem/yr per µCi/m^3

TABLE 3-22
DOSE AND DOSE RATE
R_i VALUES - VEGETATION - ADULT
$\frac{m^2\text{-mrem/yr}}{\mu Ci/sec}$

NUCLIDE	BONE	LIVER	T. BODY	THYROID	KIDNEY	LUNG	GI-LLI
H 3*	--	2.26E3	2.26E3	2.26E3	2.26E3	2.26E3	2.26E3
C 14*	8.97E5	1.79E5	1.79E5	1.79E5	1.79E5	1.79E5	1.79E5
Cr 51	--	--	4.64E4	2.77E4	1.02E4	6.15E4	1.17E7
Mn 54	--	3.13E8	5.97E7	--	9.31E7	--	9.58E8
Fe 55	2.00E8	1.38E8	3.22E7	--	--	7.69E7	7.91E7
Fe 59	1.26E8	2.96E8	1.13E8	--	--	8.27E7	1.02E9
Co 58	--	3.08E7	6.90E7	--	--	--	6.24E8
Co 60	--	1.67E8	3.69E8	--	--	--	3.14E9
Zn 65	3.17E8	1.01E9	4.56E8	--	6.75E8	--	6.36E8
Sr 89	9.96E9	--	2.86E8	--	--	--	1.60E9
Sr 90	6.05E11	--	1.48E11	--	--	--	1.75E10
Zr 95	1.18E6	3.77E5	2.55E5	--	5.92E5	--	1.20E9
Nb 95	3.55E5	1.98E5	1.06E5	--	1.95E5	--	1.20E9
Mo 99	--	6.14E6	1.17E6	--	1.39E7	--	1.42E7
I 131	4.04E7	5.78E7	3.31E7	1.90E10	9.91E7	--	1.53E7
I 133	1.00E6	1.74E6	5.30E5	2.56E8	3.03E6	--	1.56E6
Cs 134	4.67E9	1.11E10	9.08E9	--	3.59E9	1.19E9	1.94E8
Cs 137	6.36E9	8.70E9	5.70E9	--	2.95E9	9.81E8	1.68E8
Ba 140	1.29E8	1.61E5	8.42E6	--	5.49E4	9.25E4	2.65E8
La 140	1.98E3	9.97E2	2.63E2	--	--	--	7.32E7
Ce 141	1.97E5	1.33E5	1.51E4	--	6.19E4	--	5.09E8
Ce 144	3.29E7	1.38E7	1.77E6	--	8.16E6	--	1.11E10
Nd 147	3.36E4	3.88E4	2.32E3	--	2.27E4	--	1.86E8

*mrem/yr per $\mu Ci/m^3$

TABLE 3-23
PARAMETERS FOR THE EVALUATION OF DOSES TO REAL MEMBERS OF THE PUBLIC FROM GASEOUS AND LIQUID EFFLUENTS

Pathway	Parameters	Value	Reference
Fish	U (kg/yr) - adult	21	Reg. Guide 1.109 Table E-5
Fish	D_{aipj} (mrem/pCi)	Each Radionuclide	Reg. Guide 1.109 Table E-11
Shoreline	U (hr/yr)		
	- adult	67	Reg. Guide 1.09
	- teen	67	Assumed to be same as Adult
Shoreline	D_{aipj} (mrem/hr per pCi/m^2)	Each Radionuclide	Reg. Guide 1.109 Table E-6
Inhalation	DFA_{ija}	Each Radionuclide	Reg. Guide 1.109 Table E-7

TABLE 5.1
NINE MILE POINT NUCLEAR STATION
RADIOLOGICAL ENVIRONMENTAL MONITORING PROGRAM
SAMPLING LOCATIONS

Type of Sample	★Map Location	Collection Site (Env. Program No.)	Location
Radioiodine and Particulates (air)	1	Nine Mile Point Road North (R-1)	1.8 mi @ 92° E
Radioiodine and Particulates (air)	2	Co. Rt. 29 & Lake Road (R-2)	1.1 mi @ 106° ESE
Radioiodine and Particulates (air)	3	Co. Rt. 29 (R-3)	1.4 mi @ 134° SE
Radioiodine and Particulates (air)	4	Village of Lycoming, NY (R-4)	1.8 mi @ 145° SE
Radioiodine and Particulates (air)	5	Montario Point Road (R-5)	16.2 mi @ 42° NE
Direct Radiation (TLD)	6	North Shoreline Area (75)	0.1 mi @ 354° N
Direct Radiation (TLD)	7	North Shoreline Area (76)	0.1 mi @ 27° NNE
Direct Radiation (TLD)	8	North Shoreline Area (77)	0.2 mi @ 37° NE
Direct Radiation (TLD)	9	North Shoreline Area (23)	0.8 mi @ 74° ENE
Direct Radiation (TLD)	10	JAF East Boundary (78)	1.0 mi @ 86° E
Direct Radiation (TLD)	11	Rt. 29 (79)	1.2 mi @ 121° ESE
Direct Radiation (TLD)	12	Rt. 29 (80)	1.5 mi @ 136° SE
Direct Radiation (TLD)	13	Miner Road (81)	1.7 mi @ 160° SSE
Direct Radiation (TLD)	14	Miner Road (82)	1.6 mi @ 180° S
Direct Radiation (TLD)	15	Lakeview Road (83)	1.2 mi @ 203° SSW
Direct Radiation (TLD)	16	Lakeview Road (84)	1.1 mi @ 225° SW
Direct Radiation (TLD)	17	Site Meteorological Tower (7)	0.7 mi @ 244° WSW
Direct Radiation (TLD)	18	Energy Information Center (18)	0.5 mi @ 266° W

★ Map = See Figures 5.1-1 and 5.1-2

TABLE 5.1
NINE MILE POINT NUCLEAR STATION
RADIOLOGICAL ENVIRONMENTAL MONITORING PROGRAM
SAMPLING LOCATIONS

Type of Sample	★ Map Location	Collection Site (Env. Program No.)	Location
Direct Radiation (TLD)	19	North Shoreline (85)	0.2 mi @ 290° WNW
Direct Radiation (TLD)	20	North Shoreline (86)	0.1 mi @ 310° NW
Direct Radiation (TLD)	21	North Shoreline (87)	0.1 mi @ 332° NNW
Direct Radiation (TLD)	22	Hickory Grove (88)	4.5 mi @ 97° E
Direct Radiation (TLD)	23	Leavitt Road (89)	4.3 mi @ 112° ESE
Direct Radiation (TLD)	24	Rt. 104 (90)	4.2 mi @ 135° SE
Direct Radiation (TLD)	25	Rt. 51A (91)	4.9 mi @ 157° SSE
Direct Radiation (TLD)	26	Maiden Lane Road (92)	4.5 mi @ 183° S
Direct Radiation (TLD)	27	Co. Rt. 53 (93)	4.4 mi @ 206° SSW
Direct Radiation (TLD)	28	Co. Rt. 1 (94)	4.4 mi @ 224° SW
Direct Radiation (TLD)	29	Lake Shoreline (95)	3.7 mi @ 239° WSW
Direct Radiation (TLD)	30	Phoenix, NY Control (49)	19.7 mi @ 168° SSE
Direct Radiation (TLD)	31	S. W. Oswego, Control (14)	12.5 mi @ 227° SW
Direct Radiation (TLD)	32	Scriba, NY (96)	3.7 mi @ 199° SSW
Direct Radiation (TLD)	33	Novelis, Rt. 1A (58)	3.0 mi @ 222° SW
Direct Radiation (TLD)	34	Lycoming, NY (97)	1.8 mi @ 145° SE
Direct Radiation (TLD)	35	New Haven, NY (56)	5.2 mi @ 124° SE
Direct Radiation (TLD)	36	W. Boundary, Bible Camp (15)	0.9 mi @ 239° WSW
Direct Radiation (TLD)	37	Lake Road (98)	1.2 mi @ 103° ESE
Surface Water	38	OSS Inlet Canal (NA)	7.6 mi @ 236° SW
Surface Water	39	JAFNPP Inlet Canal (NA)	0.5 mi @ 71° ENE

(NA) = Not applicable
★ Map = See Figures 5.1-1 and 5.1-2

TABLE 5.1 (Cont'd)
NINE MILE POINT NUCLEAR STATION
RADIOLOGICAL ENVIRONMENTAL MONITORING PROGRAM
SAMPLING LOCATIONS

Type of Sample	★ Map Location	Collection Site (Env. Program No.)	Location
Shoreline Sediment	40	Sunset Bay Shoreline (NA)	1.2 mi @ 84° E
Fish	41	NMP Site Discharge Area (NA)	0.3 mi @ 315° NW (and/or)
Fish	42	NMP Site Discharge Area (NA)	0.6 mi @ 55° NE
Fish	43	Oswego Harbor Area (NA)	5.9 mi @ 237° WSW
Milk	64	Milk Location #55	8.8 mi @ 97° E
Milk (CR)	77	Milk Location (Summerville)	16.0 mi @ 190° S
Food Product	48	Produce Location #6★★ (Bergenstock) (NA)	1.9 mi @ 143° SE
Food Product	49	Produce Location #1★★ (Culeton) (NA)	1.6 mi @ 84° E
Food Product	50	Produce Location #2★★ (Vitullo) (NA)	1.9 mi @ 101° E
Food Product	51	Produce Location #5★★ (C.S. Parkhurst) (NA)	1.5 mi @ 116° ESE
Food Product	52	Produce Location #3★★ (C. Narewski) (NA)	1.5 mi @ 84° E

★ Map = See Figures 5.1-1 and 5.1-2
★★ = Food Product Samples need not necessarily be collected from all listed locations. Collected samples will be of the highest calculated site average D/Q.
(NA) = Not applicable
CR = Control Result (location)

TABLE 5.1 (Cont'd)
NINE MILE POINT NUCLEAR STATION
RADIOLOGICAL ENVIRONMENTAL MONITORING PROGRAM
SAMPLING LOCATIONS

Type of Sample	★ Map Location	Collection Site (Env. Program No.)	Location
Food Product	53	Produce Location #4★★ (P. Parkhurst) (NA)	1.7 mi @ 126° SE
Food Product (CR)	54	Produce Location #7★★ (Mc Millen) (NA)	15.1 mi @ 222° SW
Food Product (CR)	55	Produce Location #8★★ (Denman) (NA)	12.5 mi @ 227° SW
Food Product	56	Produce Location #9★★ (O'Connor) (NA)	1.6 mi @ 171° S
Food Product	57	Produce Location #10★★ (C. Lawton) (NA)	2.3 mi @ 124° SE
Food Product	58	Produce Location #11★★ (C. R. Parkhurst) (NA)	2.0 mi @ 112° ESE
Food Product	59	Produce Location #12★★ (Barton) (NA)	2.0 mi @ 110° ESE
Food Product (CR)	60	Produce Location #13★★ (Flack) (NA)	15.4 mi @ 222° SW
Food Product	61	Produce Location #14★★ (Koeneke) (NA)	1.9 mi @ 97° E
Food Product	62	Produce Location #15★★ (Whaley) (NA)	1.6 mi @ 139° SE
Food Product	63	Produce Location #16★★ (Murray) (NA)	1.2 mi @ 209° SSW
Food Product	67	Produce Location #17★★ (Battles)	1.7 mi @ 98° E
Food Product	68	Produce Location #18★★ (Kronenbitter)	1.5 mi @ 84° E
Food Product	69	Produce Location #119★★ (O'Connor)	1.4 mi @ 132° SE

★ Map = See Figures 5.1-1 and 5.1-2
★★ = Food Product Samples need not necessarily be collected from all listed locations. Collected samples will be of the highest calculated site average D/Q.
(NA) = Not applicable
CR = Control Result (location)

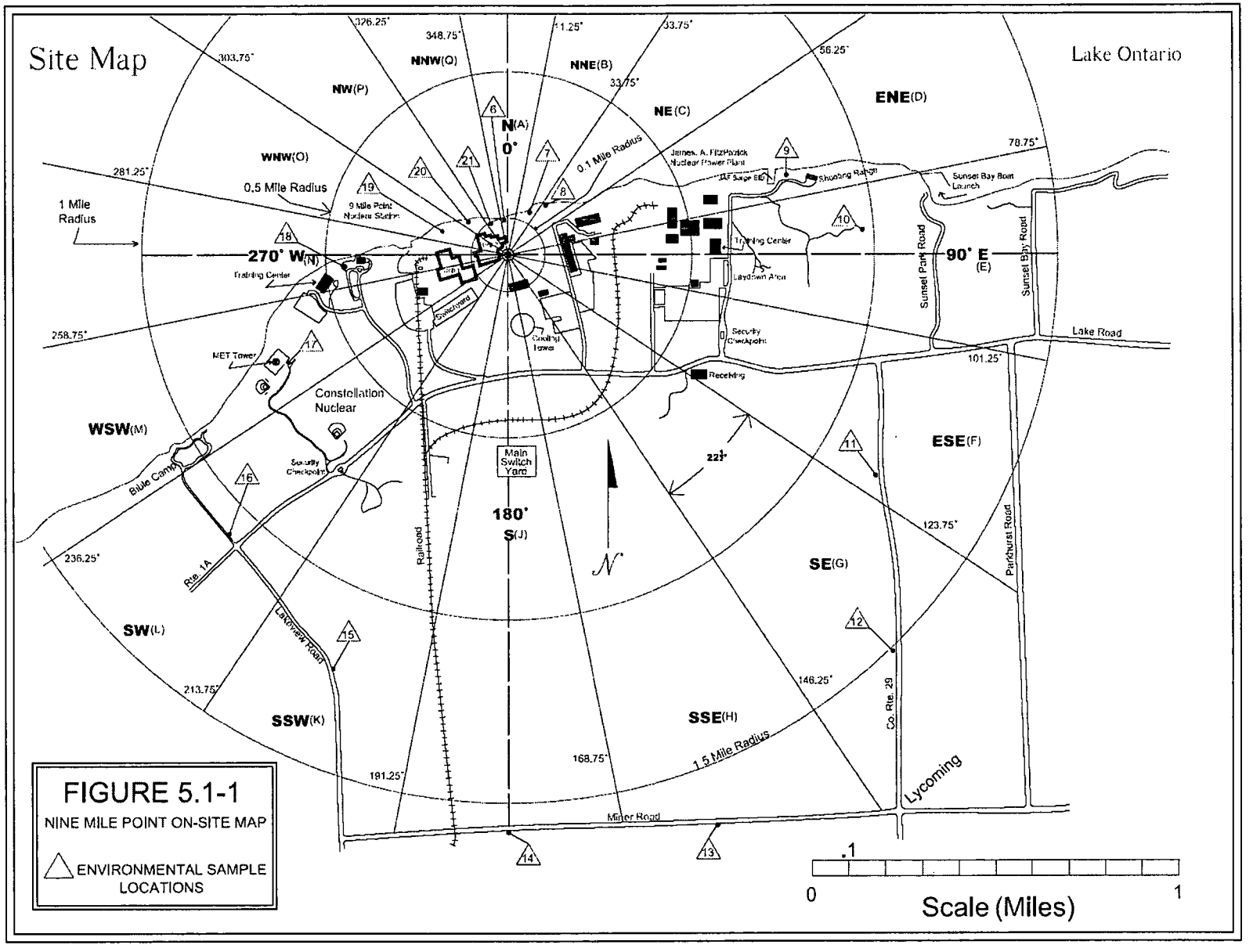
Site Map
Lake Ontario
N(A)
0°
NNE(B)
NE(C)
ENE(D)
90° E
(E)
ESE(F)
SE(G)
SSE(H)
180°
S(J)
SSW(K)
SW(L)
WSW(M)
270° W(N)
WNW(O)
NW(P)
NNW(O)
0.1 Mile Radius
0.5 Mile Radius
1 Mile Radius
1.5 Mile Radius
James A. FitzPatrick Nuclear Power Plant
Nine Mile Point Nuclear Station
Training Center
Laydown Area
Security Checkpoint
Receiving
Cooling Tower
Switchyard
Main Switch Yard
Constellation Nuclear
MET Tower
Blue Camp
Rte. 1A
Lakeview Road
Railroad
Miller Road
Co. Rte. 29
Lycoming
Parkhurst Road
Sunset Park Road
Sunset Bay Road
Sunset Bay Boat Launch
Shooting Range
Lake Road
22½°
FIGURE 5.1-1
NINE MILE POINT ON-SITE MAP
ENVIRONMENTAL SAMPLE LOCATIONS
0
.1
1
Scale (Miles)

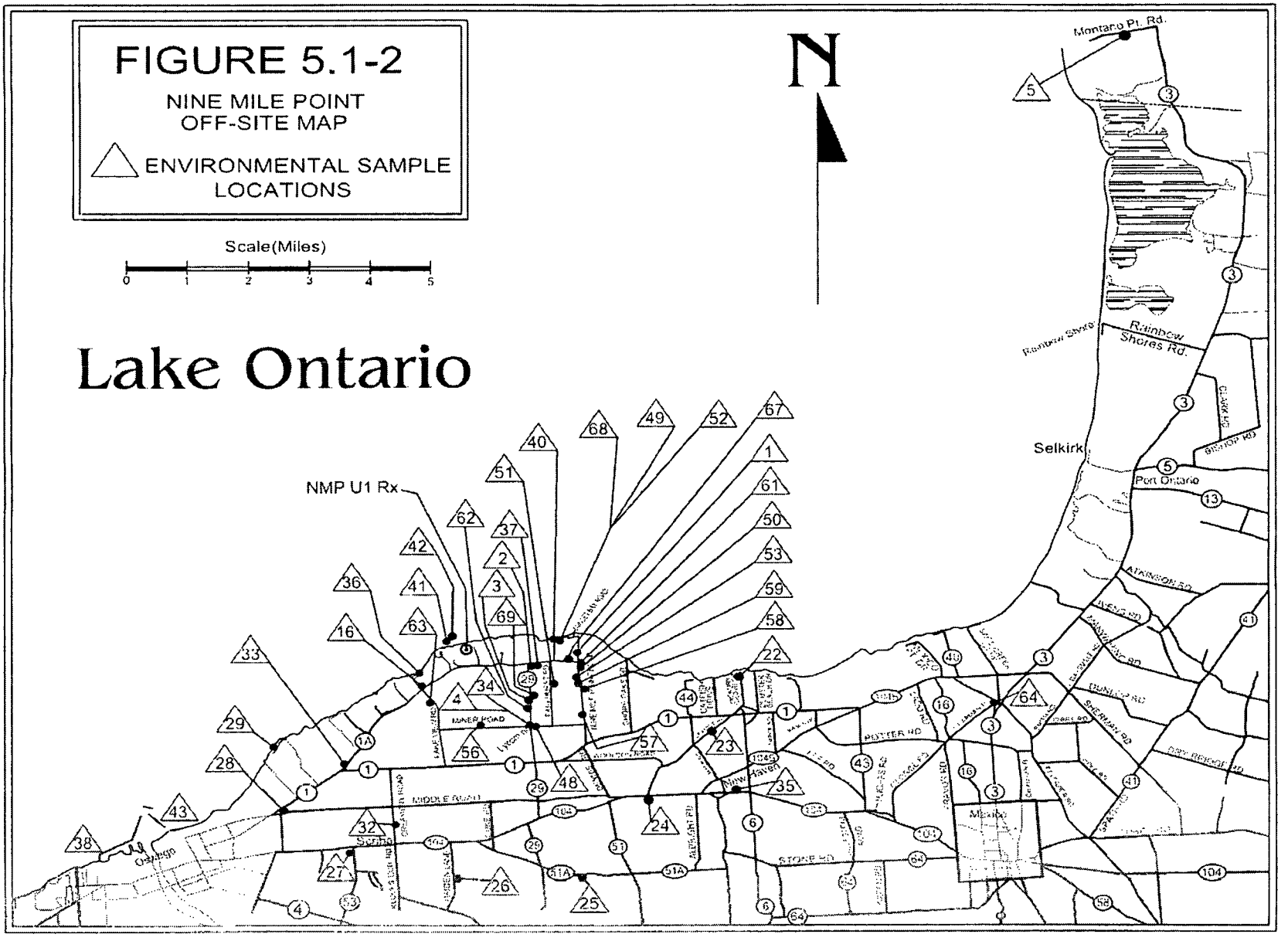
FIGURE 5.1-2
NINE MILE POINT
OFF-SITE MAP
ENVIRONMENTAL SAMPLE
LOCATIONS
Scale(Miles)
0
1
2
3
4
5
N
Lake Ontario
NMP U1 Rx
Montano Pt. Rd.
Rainbow Shores Rd.
Selkirk
Port Ontario
Mexico
New Haven
Scriba
Oswego
MINER ROAD
MIDDLE ROAD
STONE RD
POTTER RD
ATKINSON RD
DUNLOP RD
SHERMAN RD
CLARK RD
BISHOP RD

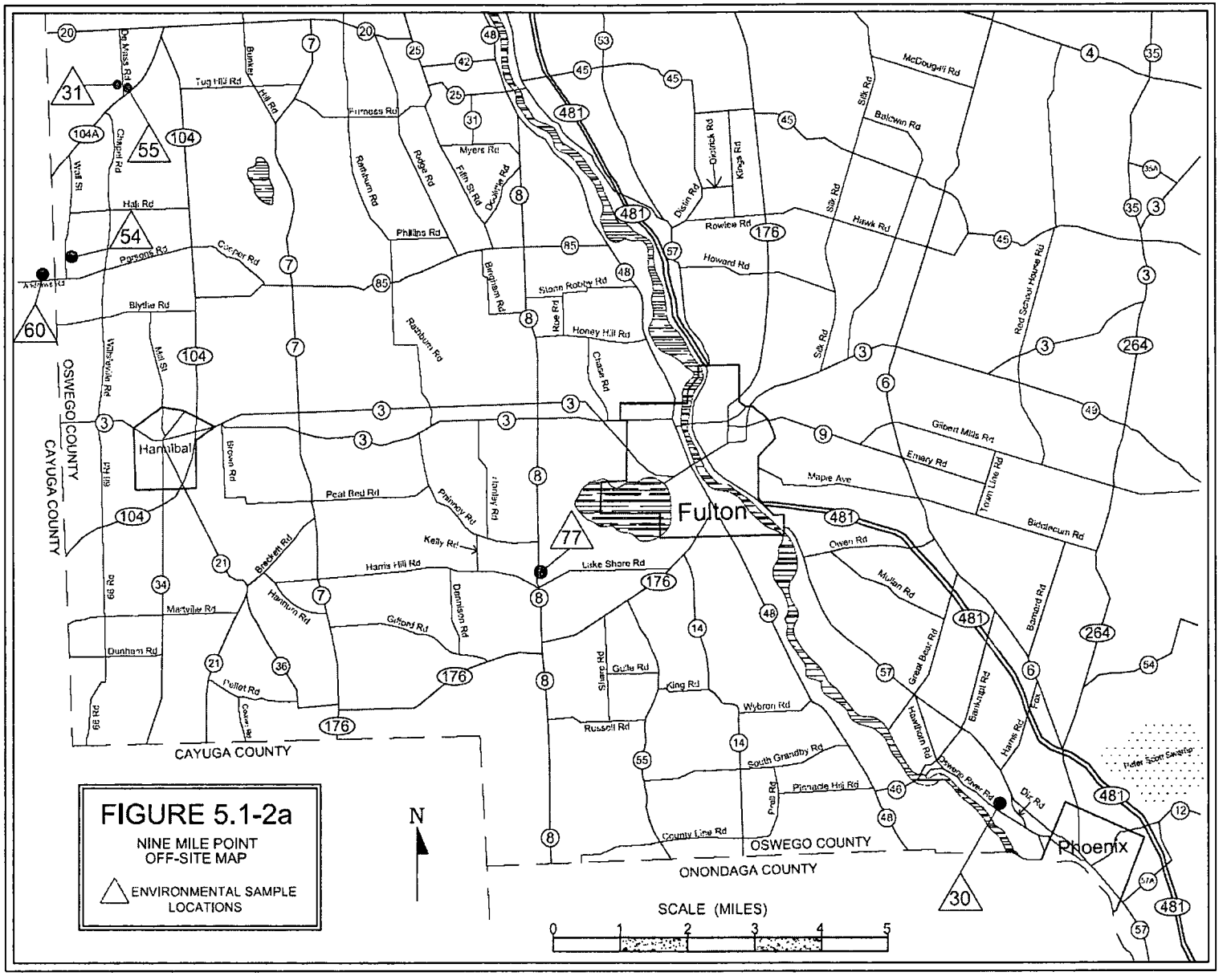
FIGURE 5.1-2a
NINE MILE POINT
OFF-SITE MAP
ENVIRONMENTAL SAMPLE LOCATIONS
N
SCALE (MILES)
0 1 2 3 4 5
Fulton
Hannibal
Phoenix
OSWEGO COUNTY
CAYUGA COUNTY
ONONDAGA COUNTY
31
55
54
60
77
30

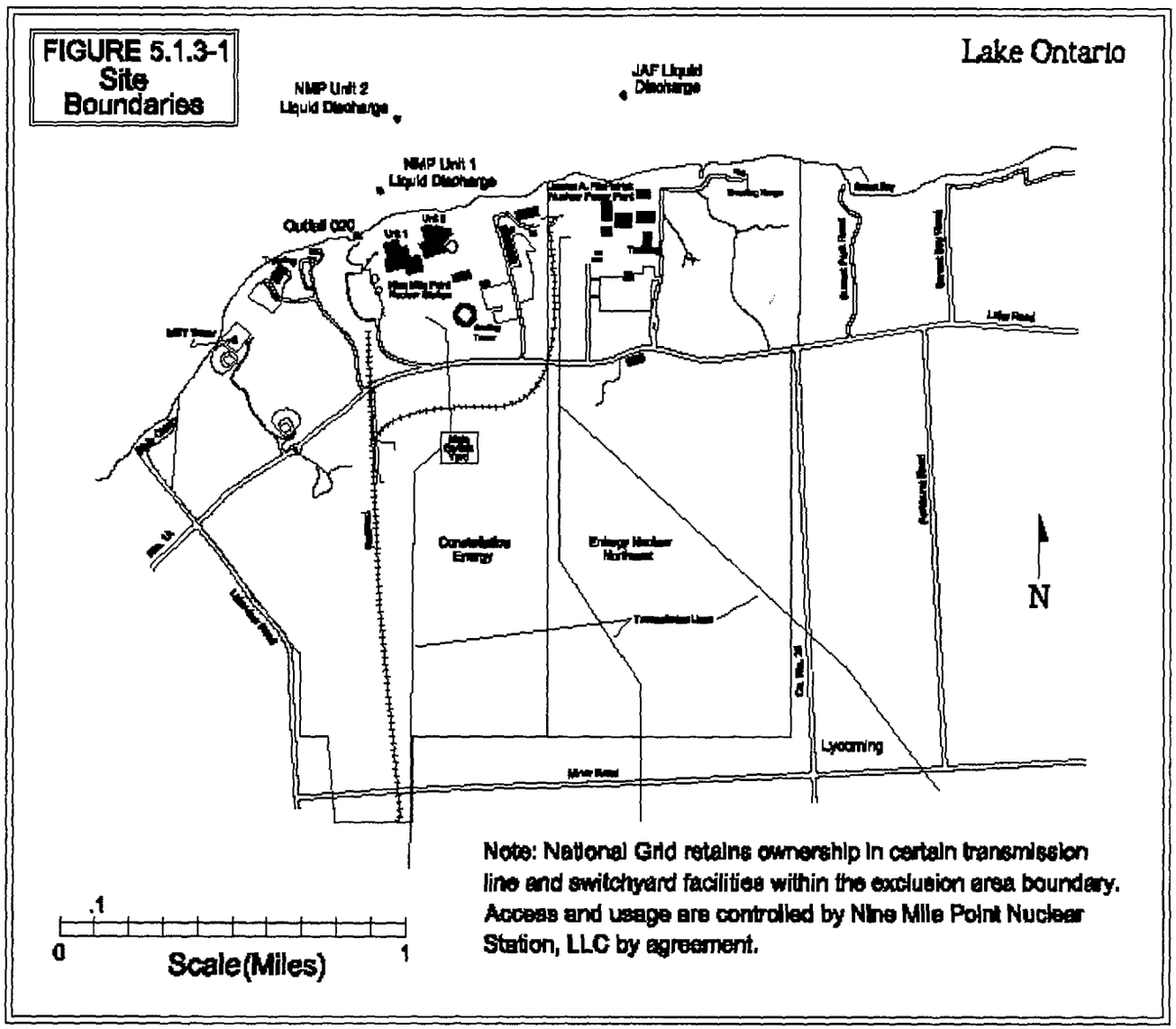
FIGURE 5.1.3-1
Site
Boundaries
Lake Ontario
NMP Unit 2
Liquid Discharge
JAF Liquid
Discharge
NMP Unit 1
Liquid Discharge
Outfall 020
Constellation
Energy
Entergy Nuclear
Northeast
Lyoming
N
.1
0
1
Scale(Miles)
Note: National Grid retains ownership in certain transmission line and switchyard facilities within the exclusion area boundary. Access and usage are controlled by Nine Mile Point Nuclear Station, LLC by agreement.

APPENDIX A
LIQUID DOSE FACTOR DERIVATION

Appendix A

Liquid Effluent Dose Factor Derivation, A_{iat}

A_{iat} (mrem/hr per μCi/ml) which embodies the dose conversion factors, pathway transfer factors (e.g., bioaccumulation factors), pathway usage factors, and dilution factors for the points of pathway origin takes into account the dose from ingestion of fish and drinking water and the sediment. The total body and organ dose conversion factors for each radionuclide will be used from Table E-11 of Regulatory Guide 1.109. To expedite time, the dose is calculated for a maximum individual instead of each age group. The maximum individual dose factor is a composite of the highest dose factor A_{iat} of each nuclide i age group a, and organ t, hence A_{1at}. It should be noted that the fish ingestion pathway is the most significant pathway for dose from liquid effluents. The water consumption pathway is included for consistency with NUREG 0133.

The equation for calculating dose contributions given in section 1.3 requires the use of the composite dose factor A_{it} for each nuclide, i. The dose factor equation for a fresh water site is:

$$A_{iat} = Ko\left[\frac{U_w(e^{-\lambda_i t_{pw}})}{D_w} + U_f(BF)_i(e^{-\lambda_i t_{pf}})(DFL)_{iat} + \frac{69.3U_s W}{(D_s)(\lambda_i)} e^{-\lambda_i t_{ps}}(1-e^{-\lambda_i t_b})(DFS)_i\right]$$

Where:

A_{iat}	=	Is the dose factor for nuclide i, age group a, total body or organ t, for all appropriate pathways, (mrem/hr per μCi/ml).
Ko	=	Is the unit conversion factor, 1.14E5=1E6pCi/μCi x 1E3 ml/kg -:- 8760 hr/yr.
U_w	=	Water consumption (l/yr); from Table E-5 of Reg. Guide 1.109.
U_f	=	Fish consumption (Kg/yr); from Table E-5 of Reg. Guide 1.109.
U_s	=	Sediment Shoreline Usage (hr/yr); from Table E-5 of Reg. Guide 1.109.
$(BF)_i$	=	Bioaccumulation factor for nuclide, i, in fish, (pCi/kg per pCi/1), from Table A-1 of Reg. Guide 1.109.
$(DFL)_{iat}$	=	Dose conversion factor for age, nuclide, i, group a, total body or organ t, (mrem/pCi); from Table E-11 of Reg. Guide 1.109.
$(DFS)_i$	=	Dose conversion factor for nuclide i and total body, from standing on contaminated ground (mem/hr per pCi/m^2); from Table E-6 of Reg. Guide 1.109.
D_w	=	Dilution factor from the near field area within one-quarter mile of the release point to the potable water intake for the adult water consumption. This is the Metropolitan Water Board, Onondaga County intake structure located west of the City of Oswego; (unitless).

D_s	=	Dilution factor from the near field area within one quarter mile of the release point to the shoreline deposit (taken at the same point where we take environmental samples 1.5 miles; unitless).
69.3	=	conversion factor .693 x 100, 100 = K_c (L/kg-hr) *40*24 hr/day/.693 in L/m^2-d, and K_c = transfer coefficient from water to sediment in L/kg per hour.
t_{pw}, t_{pf}, t_{ps}	=	Average transit time required for each nuclide to reach the point of exposure for internal dose, it is the total time elapsed from release of the nuclides to either ingestion for water (w) and fish (f) or shoreline deposit (s), (hr).
t_b	=	Length of time the sediment is exposed to the contaminated water, nominally 15 yrs (approximate midpoint of facility operating life), (hrs).
λ_i	=	decay constant for nuclide i (hr^{-1}).
W	=	Shore width factor (unitless) from Table A-2 of Reg. Guide 1.109.

Example Calculation

For I-131 Thyroid Dose Factor for an Adult from a Radwaste liquid effluents release:

$(DFS)_i$	= 2.80E-9	mrem/hr per pCi/m^2			
$(DFL)_{iat}$	= 1.95E-3	mrem/pCi	t_{pw}	=	30 hrs. (w = water)
BF_i	= 15	pCi/Kg per pCi/L	t_{pf}	=	24 hrs. (f = fish)
U_f	= 21	Kg/yr	t_b	=	1.314E5 hrs. (5.48E3 days)
D_w	= 40	unitless	U_w	=	730 L/yr
D_s	= 12	unitless	Ko	=	1.14E5 $\frac{(pCi/\mu Ci)(ml/kg)}{(hr/yr)}$
U_s	= 12	hr/yr			
W	= 0.3		λ_i	=	3.61E-3hr^{-1}
t_{ps}	= 5.5	hrs (s = Shoreline Sediment)			

These values will yield an A_{iat} Factor of 6.79E4 mrem-ml per µCi-hr as listed in Table 2-4. It should be noted that only a limited number of nuclides are listed on Tables 2-1 to 2-8. These are the most common nuclides encountered in effluents. If a nuclide is detected for which a factor is not listed, then it will be calculated and included in a revision to the ODCM.

In addition, not all dose factors are used for the dose calculations. A maximum individual is used, which is a composite of the maximum dose factor of each age group for each organ as reflected in the applicable chemistry procedures.

APPENDIX B

PLUME SHINE DOSE FACTOR DERIVATION

APPENDIX B

For elevated releases the plume shine dose factors for gamma air (B_i) and whole body (V_i), are calculated using the finite plume model with an elevation above ground equal to the stack height. To calculate the plume shine factor for gamma whole body doses, the gamma air dose factor is adjusted for the attenuation of tissue, and the ratio of mass absorption coefficients between tissue and air. The equations are as follows:

Gamma Air

$$B_i = \Sigma_s \frac{K \mu_a E I_s}{R \Theta V_s}$$

Where:

K^1	=	conversion factor (see below for actual value).
μ_a	=	mass absorption coefficient (cm^2/g; air for B_i, tissue for V_i)
E	=	Energy of gamma ray per disintegration (Mev)
V_s	=	average wind speed for each stability class (s), m/s
R	=	downwind distance (site boundary, m)
Θ	=	sector width (radians)
s	=	subscript for stability class
I_s	=	I function = $I_1 + kI_2$ for each stability class. (unitless, see Regulatory Guide 1.109)
k^2	=	Fraction of the attenuated energy that is actually absorbed in air (see Regulatory Guide 1.109, see below for equation)

Whole Body

$$V_i = 1.11 S_F B_i e^{-\mu_a t_d}$$

Where:

t_d	=	tissue depth (g/cm^2)
S_F	=	shielding factor from structures (unitless)
1.11	=	Ratio of mass absorption coefficients between tissue and air.

Where all other parameters are defined above.

$$^1K = \text{conversion factor} = \frac{\left[3.7\ E10\ \frac{dis}{Ci\text{-}sec}\right]\ \left[1.6\ E\text{-}6\ \frac{erg}{Mev}\right]}{\left[1293\ \frac{g}{m^3}\right]\ \left[100\ \frac{erg}{g\text{-}rad}\right]} = 0.46$$

$$^2k = \frac{\mu - \mu_a}{\mu_a}$$

Where:

μ	=	mass attenuation coefficient (cm^2/g; air for B_i, tissue for V_i)
μ_a	=	defined above

APPENDIX B (Cont'd)

There are seven stability classes, A thru F. The percentage of the year that each stability class occurs is taken from the U-2 FSAR. From this data, a plume shine dose factor is calculated for each stability class and each nuclide, multiplied by its respective fraction and then summed.

The wind speeds corresponding to each stability class are, also, taken from the U-2 FSAR. To confirm the accuracy of these values, an average of the 12 month wind speeds for 1985, 1986, 1987 and 1988 was compared to the average of the FSAR values. The average wind speed of the actual data is equal to 6.78 m/s, which compared favorably to the FSAR average wind speed equal to 6.77 m/s.

The average gamma energies were calculated using a weighted average of all gamma energies emitted from the nuclide. These energies were taken from the handbook "Radioactive Decay Data Tables", David C. Kocher.

The mass absorption (μ_a) and attenuation (μ) coefficients were calculated by multiplying the mass absorption (μ_a/μ) and mass attenuation (μ/ρ) coefficients given in the Radiation Health Handbook by the air density equal to 1.293 E-3 g/cc or the tissue density of 1 g/cc where applicable. The tissue depth is $5 g/cm^2$ for the whole body.

The downwind distance is the site boundary.

APPENDIX B (Cont'd)

SAMPLE CALCULATION

Ex. Kr-89 F STABILITY CLASS ONLY - Gamma Air

-DATA

$E = 2.22MeV$ $k = \frac{\mu-\mu_a}{\mu_a} = .871$ $K = 0.46$

$\mu_a = 2.943\ E\text{-}3m^{-1}$ $V_F = 5.55\ m/sec$

$\mu = 5.5064E\text{-}3m^{-1}$ $R = 644m$

$\Theta = 0.39$

$\Theta_z = 19m$.....vertical plume spread taken from "Introduction to Nuclear Engineering", John R. LaMarsh

-I Function

$U\Theta_z = 0.06$

$I_1 = 0.33$

$I_2 = 0.45$

$I = I_1 + kI_2 = 0.33 + (0.871)(0.45) = 0.72$

$$B_i = \frac{0.46\left[\frac{dis.}{Ci\text{-}sec)\ (Mev/ergs}\right](2.943E\text{-}3m^{-1})(2.22Mev)(.72)}{(\pi^{1/2})\ (g/m^3)\ \left(\frac{ergs}{g\text{-}rad}\right)\ (5.55\ m/s)\ (.39)\ (644m)}$$

$$= 1.55(-6)\ \frac{rad/s\ (3600\ s/hr)\ (24\ h/d)\ (365\ d/y)\ (1E3mrad/rad)}{Ci/s\ \left(\frac{1E6\mu Ci}{Ci}\right)}$$

$$= 2.76(-2)\ \frac{mrad/yr}{\mu Ci/sec}$$

$$V_i = 1.11(.7)\left[2.76(-2)\ \frac{mrad/yr}{\mu Ci/sec}\right]\left[e^{-(.0253\ cm^2/g)(5g/cm^2)}\right]$$

$$= 1.89(-2)\ \frac{mrad/yr}{\mu Ci/sec}$$

NOTE: The above calculation is for the F stability class only. For Table 3-2 and procedure values, a weighted fraction of each stability class was used to determine the B_i and V_i values.

APPENDIX C

ORGAN DOSE PARAMETERS FOR IODINE 131 and 133, PARTICULATES AND TRITIUM

APPENDIX C

ORGAN DOSE PARAMETERS FOR IODINE - 131 AND - 133, PARTICULATES AND TRITIUM

This appendix contains the methodology which was used to calculate the organ dose factors for I-131, I-133, particulates, and tritium. The dose factor, R_i, was calculated using the methodology outlined in NUREG-0133. The radioiodine and particulate ODCM Part I (Control DLCO 3.6.15) is applicable to the location in the unrestricted area where the combination of existing pathways and receptor age groups indicates the maximum potential exposure occurs, i.e., the critical receptor. Washout was calculated and determined to be negligible. R_i values have been calculated for the adult, teen, child and infant age groups for all pathways. However, for dose compliance calculations, a maximum individual is assumed that is a composite of highest dose factor of each age group for each organ and pathway. The methodology used to calculate these values follows:

C.1 Inhalation Pathway

$$R_i(I) = K'(BR)_a(DFA)_{ija}$$

where:

$R_i(I)$ = dose factor for each identified radionuclide i of the organ of interest (units = mrem/yr per $\mu Ci/m^3$);

K' = a constant of unit conversion, 1E6 pCi/μCi

$(BR)_a$ = Breathing rate of the receptor of age group a, (units = m^3/yr);

$(DFA)_{ija}$ = The inhalation dose factor for nuclide i, organ j and age group a, and organ t (units = mrem/pCi).

The breathing rates $(BR)_a$ for the various age groups, as given in Table E-5 of Regulatory Guide 1.109 Revision 1, are tabulated below.

Age Group (a)	Breathing Rate (m^3/yr)
Infant	1400
Child	3700
Teen	8000
Adult	8000

Inhalation dose factors $(DFA)_{ija}$ for the various age groups are given in Tables E-7 through E-10 of Regulatory Guide 1.109 Revision 1.

C.2 Ground Plane Pathway

$$R_i(G) = \frac{K'K''(SF)(DFG)_i \ (1-e^{-\lambda_i t})}{\lambda_i}$$

Where:

$R_i(G)$	=	Dose factor for the ground plane pathway for each identified radionuclide i for the organ of interest (units = m^2-mrem/yr per μCi/sec)
K'	=	A constant of unit conversion, 1E6 pCi/μCi
K"	=	A constant of unit conversion, 8760 hr/year
λ_i	=	The radiological decay constant for radionuclide i, (units = sec^{-1})
t	=	The exposure time, sec, 4.73E8 sec (15 years)
$(DFG)_i$	=	The ground plane dose conversion factor for radionuclide i; (units = mrem/hr per pCi/m^2)
SF	=	The shielding factor (dimensionless)

A shielding factor of 0.7 is discussed in Table E-15 of Regulatory Guide 1.109 Revision 1. A tabulation of DFG_i values is presented in Table E-6 of Regulatory Guide 1.109 Revision 1.

C.3 Grass-(Cow or Goat)-Milk Pathway

$$R_i(C) = \frac{K'Q_f(U_{ap})\,F_m(r)(DFL)_{iat}}{(\lambda_i + \lambda_w)} \left[\frac{f_p f_s}{Y_p} + \frac{(1-f_p f_s)}{Y_s}(e^{-\lambda_i t_h}) \right] e^{-\lambda_i t_f}$$

Where:

$R_i(C)$	=	Dose factor for the cow milk or goat milk pathway, for each identified radionuclide i for the organ of interest, (units = m^2-mrem/yr per µCi/sec)
K'	=	A constant of unit conversion, 1E6 pCi/µCi
Q_f	=	The cow's or goat's feed consumption rate, (units = kg/day-wet weight)
U_{ap}	=	The receptor's milk consumption rate for age group a, (units = liters/yr)
Y_p	=	The agricultural productivity by unit area of pasture feed grass, (units = kg/m^2)
Y_s	=	The agricultural productivity by unit area of stored feed, (units = kg/m^2)
F_m	=	The stable element transfer coefficients, (units = pCi/liter per pCi/day)
r	=	Fraction of deposited activity retained on cow's feed grass
$(DFL)_{iat}$	=	The ingestion dose factor for nuclide i, age group a, and total body or organ t (units = mrem/pCi)
λ_i	=	The radiological decay constant for radionuclide i, (units=sec^{-1})
λ_w	=	The decay constant for removal of activity on leaf and plant surfaces by weathering equal to 5.73E-7 sec^{-1} (corresponding to a 14 day half-life)
t_f	=	The transport time from pasture to cow or goat, to milk, to receptor, (units = sec)
t_h	=	The transport time from pasture, to harvest, to cow or goat, to milk, to receptor (units = sec)

f_p	=	Fraction of the year that the cow or goat is on pasture (dimensionless)
f_s	=	Fraction of the cow feed that is pasture grass while the cow is on pasture (dimensionless)

Milk cattle and goats are considered to be fed from two potential sources, pasture grass and stored feeds. Following the development in Regulatory Guide 1.109 Revision 1, the value of f_s is considered unity in lieu of site specific information. The value of f_p is 0.5 based on 6 month grazing period. This value for f_p was obtained from the environmental group.

Table C-1 contains the appropriate values and their source in Regulatory Guide 1.109 Revision 1.

The concentration of tritium in milk is based on the airborne concentration rather than the deposition. Therefore, the $R_T(C)$ is based on X/Q:

$$R_T(C) = K'K''' F_m Q_f U_{ap} (DFL)_{iat} \; 0.75(0.5/H)$$

Where:

$R_T(C)$	=	Dose factor for the cow or goat milk pathway for tritium for the organ of interest, (units = mrem/yr per $\mu Ci/m^3$)
K'''	=	A constant of unit conversion, 1E3 g/kg
H	=	Absolute humidity of the atmosphere, (units = g/m^3)
0.75	=	The fraction of total feed that is water
0.5	=	The ratio of the specific activity of the feed grass water to the atmospheric water

Other values are given previously. A site specific value of H equal to 6.14 g/m^3 is used. This value was obtained from the environmental group using actual site data.

C.4 Grass-Cow-Meat Pathway

$$R_i(C) = \frac{K'Q_f(U_{ap})\,F_f(r)(DFL)_{iat}}{(\lambda_i + \lambda_w)} \left[\frac{f_p f_s}{Y_p} + \frac{(1-f_p f_s)}{Y_s}\left(e^{-\lambda_i t_h}\right) \right] e^{-\lambda_i t_f}$$

$R_i(M)$ = Dose factor for the meat ingestion pathway for radionuclide i for any organ of interest, (units = m^2-mrem/yr per μCi/sec)

F_f = The stable element transfer coefficients, (units = pCi/kg per pCi/day)

U_{ap} = The receptor's meat consumption rate for age group a, (units = kg/year)

t_h = The transport time from harvest, to cow, to receptor, (units = sec)

t_f = The transport time from pasture, to cow, to receptor, (units = sec)

All other terms remain the same as defined for the milk pathway. Table C-2 contains the values which were used in calculating $R_i(M)$.

The concentration of tritium in meat is based on airborne concentration rather than deposition. Therefore, the $R_T(M)$ is based on X/Q.

$$R_T(M) = K'K'''F_f Q_f U_{ap}(DFL)_{iat}\,[0.75(0.5/H)]$$

Where:

$R_T(M)$ = Dose factor for the meat ingestion pathway for tritium for any organ of interest, (units = mrem/yr per μCi/m^3)

All other terms are defined above.

C.5 Vegetation Pathway

The integrated concentration in vegetation consumed by man follows the expression developed for milk. Man is considered to consume two types of vegetation (fresh and stored) that differ only in the time period between harvest and consumption, therefore:

$$R_i(V) = K' \frac{r}{Y_v(\lambda_i + \lambda_w)} (DFL)_{iat} \left[U^L_a F_L e^{-\lambda_i t_L} + U^s_a F_g e^{-\lambda_i t_h} \right]$$

Where:

$R_i(V)$	=	Dose factor for vegetable pathway for radionuclide i for the organ of interest, (units = m^2-mrem/yr per μCi/sec)
K'	=	A constant of unit conversion, 1E6 pCi/μCi
U^L_a	=	The consumption rate of fresh leafy vegetation by the receptor in age group a, (units = kg/yr)
U^S_a	=	The consumption rate of stored vegetation by the receptor in age group a (units = kg/yr)
F_L	=	The fraction of the annual intake of fresh leafy vegetation grown locally
F_g	=	The fraction of the annual intake of stored vegetation grown locally
t_L	=	The average time between harvest of leafy vegetation and its consumption, (units = sec)
t_h	=	The average time between harvest of stored vegetation and its consumption, (units = sec)
Y_v	=	The vegetation areal P density, (units = kg/m^2)

All other factors have been defined previously.

Table C-3 presents the appropriate parameter values and their source in Regulatory Guide 1.109 Revision 1.

In lieu of site-specific data, values for F_L and F_g of, 1.0 and 0.76, respectively, were used in the calculation. These values were obtained from Table E-15 of Regulatory Guide 1.109 Revision 1.

The concentration of tritium in vegetation is based on the airborne concentration rather than the deposition. Therefore, the $R_T(V)$ is based on X/Q:

$$R_T(V) = K'K''' [U^L_a f_L + U^s_a f_g](DFL)_{iat}\, 0.75(0.5/H)$$

Where:

$R_T(V)$	=	dose factor for the vegetable pathway for tritium for any organ of interest, (units = mrem/yr per μCi/m^3).

All other terms are defined in preceeding sections.

TABLE C-1

Parameters for Grass-(Cow or Goat)-Milk Pathways

Parameter	Value	Reference (Reg. Guide 1.109 Rev. 1)
Q_f (kg/day)	50 (cow) 6 (goat)	Table E-3 Table E-3
r	1.0 (radioiodines) 0.2 (particulates)	Table E-15 Table E-15
$(DFL)_{ija}$ (mrem/pCi)	Each radionuclide	Tables E-11 to E-14
F_m (pCi/liter per pCi/day)	Each stable element	Table E-1 (cow) Table E-2 (goat)
Y_s (kg/m^2)	2.0	Table E-15
Y_p (kg/m^2)	0.7	Table E-15
t_h (seconds)	7.78×10^6 (90 days)	Table E-15
t_f (seconds)	1.73×10^5 (2 days)	Table E-15
U_{ap} (liters/yr)	330 infant 330 child 400 teen 310 adult	Table E-5 Table E-5 Table E-5 Table E-5

TABLE C-2

Parameters for the Grass-Cow-Meat Pathway

Parameter	Value	Reference (Reg. Guide 1.109 Rev. 1)
r	1.0 (radioiodines) 0.2 (particulates)	Table E-15 Table E-15
F_f (pCi/Kg per pCi/day)	Each stable element	Table E-1
U_{ap} (Kg/yr)	0 infant 41 child 65 teen 110 adult	Table E-5 Table E-5 Table E-5 Table E-5
$(DFL)_{ija}$ (mrem/pCi)	Each radionuclide	Tables E-11 to E-14
Y_p (kg/m^2)	0.7	Table E-15
Y_s (kg/m^2)	2.0	Table E-15
t_h (seconds)	7.78E6 (90 days)	Table E-15
t_f (seconds)	1.73E6 (20 days)	Table E-15
Q_f (kg/day)	50	Table E-3

TABLE C-3

Parameters for the Vegetable Pathway

Parameter	Value	Reference (Reg. Guide 1.109 Rev. 1)
r (dimensionless)	1.0 (radioiodines)	Table E-1
	0.2 (particulates)	Table E-1
$(DFL)_{ija}$ (mrem/pCi)	Each radionuclide	Tables E-11 to E-14
$U^{L})_{a}$ (kg/yr) - infant	0	Table E-5
- child	26	Table E-5
- teen	42	Table E-5
- adult	64	Table E-5
$U^{s})_{a}$ (kg/yr) - infant	0	Table E-5
- child	520	Table E-5
- teen	630	Table E-5
- adult	520	Table E-5
t_L (seconds)	8.6E4 (1 day)	Table E-15
t_h (seconds)	5.18E6 (60 days)	Table E-15
Y_v (kg/m^2)	2.0	Table E-15

APPENDIX D

DIAGRAMS OF RADIOACTIVE LIQUID AND GASEOUS EFFLUENT TREATMENT SYSTEMS AND MONITORING SYSTEMS

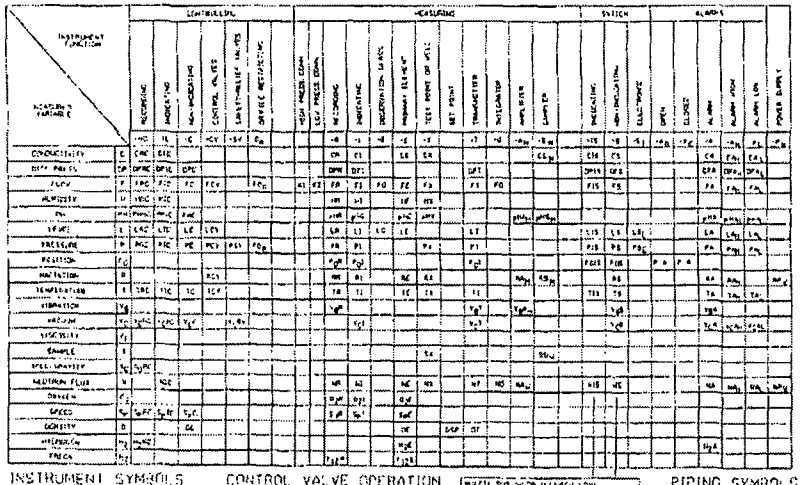

VALVE SYMBOLS

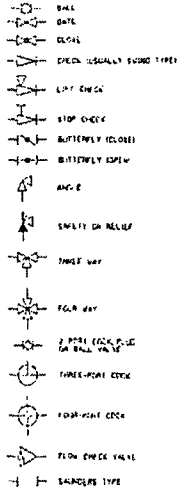

LINE SYMBOLS

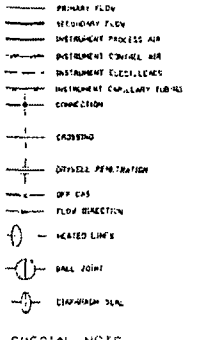

SPECIAL NOTE

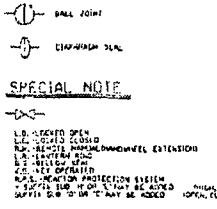

INSTRUMENT SYMBOLS

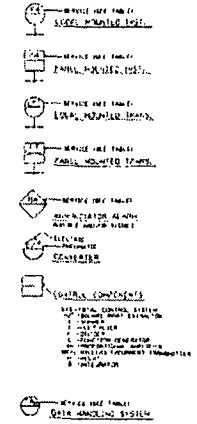

CONTROL VALVE OPERATION

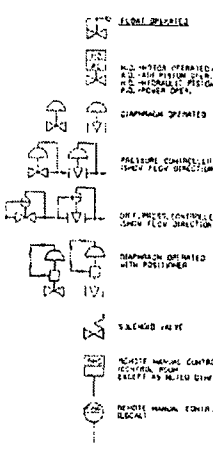

FLOW DEVICES

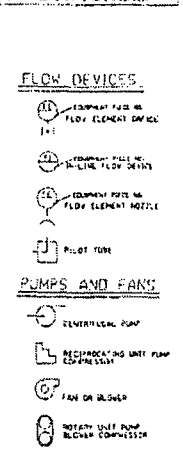

PUMPS AND FANS

PIPING SYMBOLS

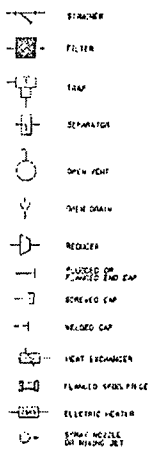

VENTILATION DAMPERS

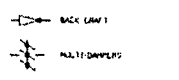

VALVE POSITIONS

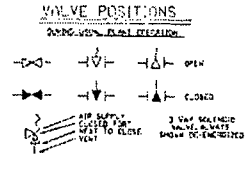

EXPANSION JOINTS

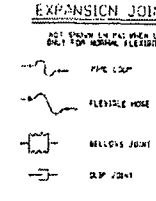

CONTROL VALVE DESIGNATION

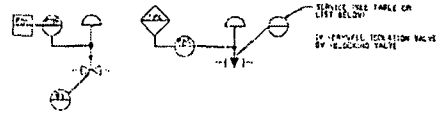

CONTROL VALVE OPERATION

USE APPLICABLE OPERATOR & VALVE SYMBOL

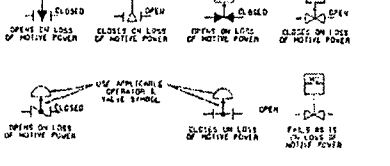

FIGURE D-0
PIPING INSTRUMENT AND EQUIPMENT SYMBOLS
NINE MILE POINT UNIT 1
OFFSITE DOSE CALC. MANUAL

FIGURE I - 1
REV.3 (1985)

FS/0 14
A- 13901

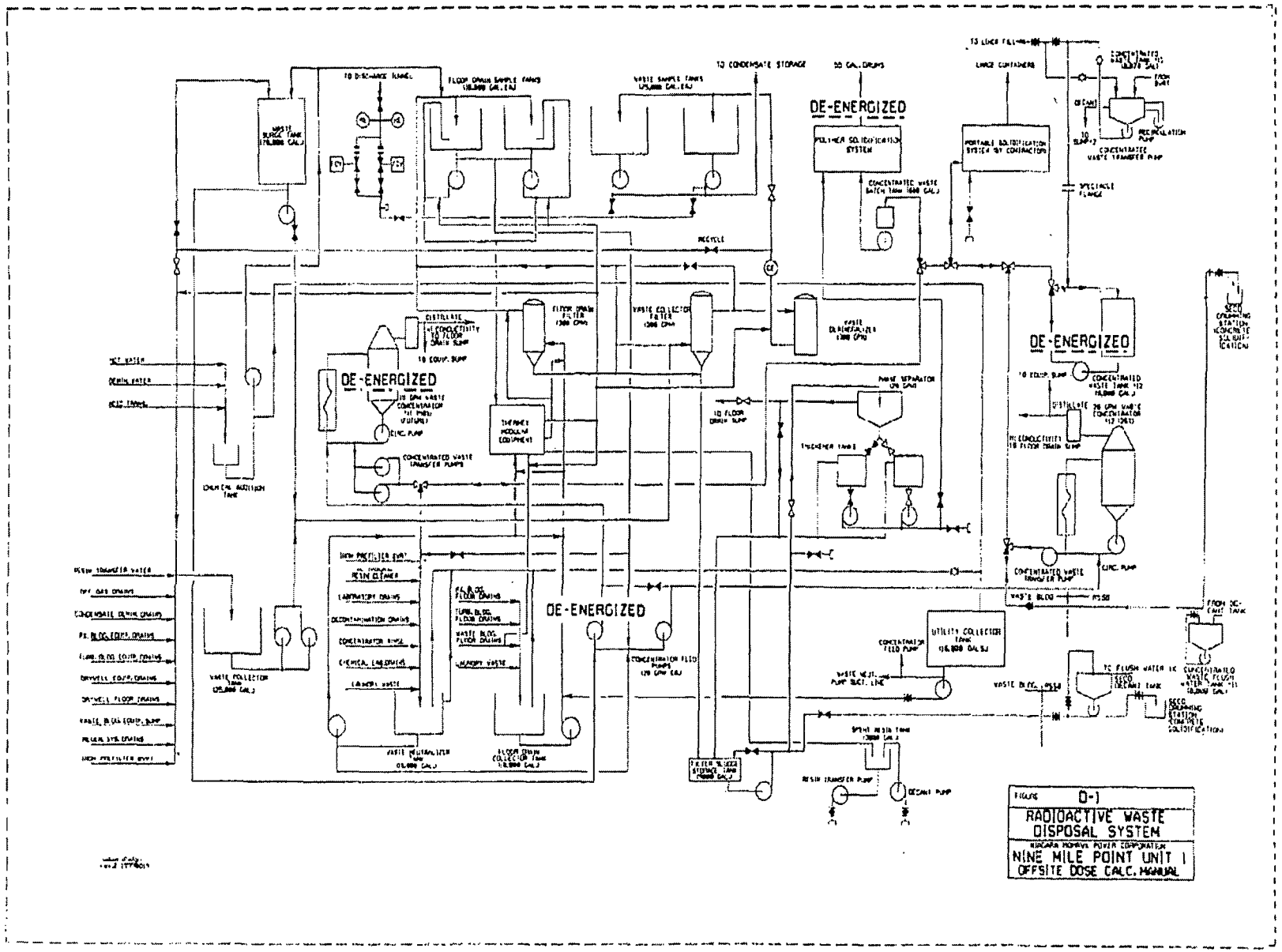
DE-ENERGIZED
DE-ENERGIZED
DE-ENERGIZED
DE-ENERGIZED
TO CONDENSATE STORAGE
55 GAL. DRUMS
LARGE CONTAINERS
RECYCLE
UTILITY COLLECTOR TANK
FIGURE D-1
RADIOACTIVE WASTE DISPOSAL SYSTEM
NIAGARA MOHAWK POWER CORPORATION
NINE MILE POINT UNIT 1
OFFSITE DOSE CALC. MANUAL

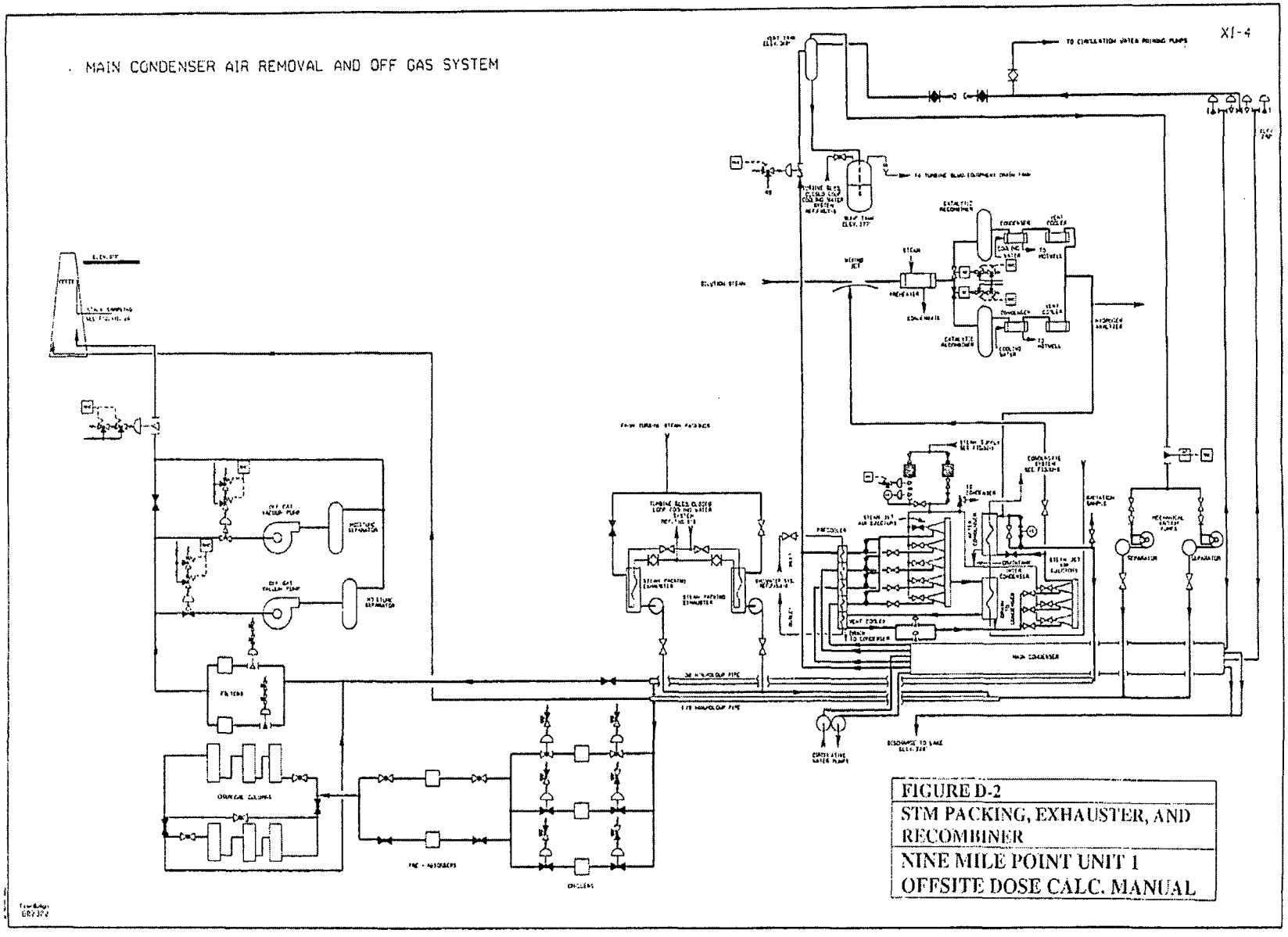

FIGURE D-2
STM PACKING, EXHAUSTER, AND RECOMBINER
NINE MILE POINT UNIT 1
OFFSITE DOSE CALC. MANUAL

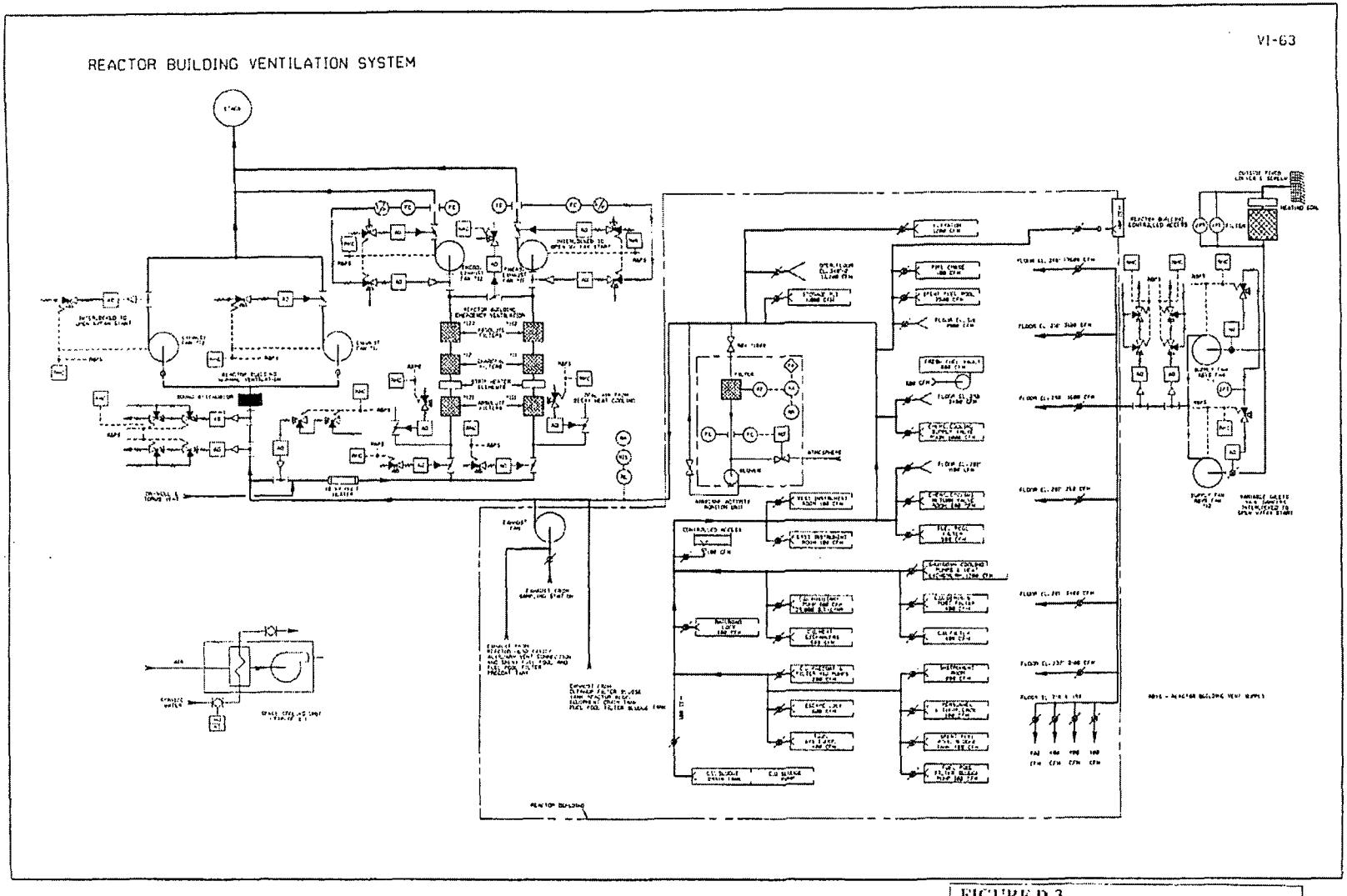

FIGURE D-3
REACTOR BUILDING VENT SYSTEM
NINE MILE POINT UNIT 1
OFFSITE DOSE CALC. MANUAL

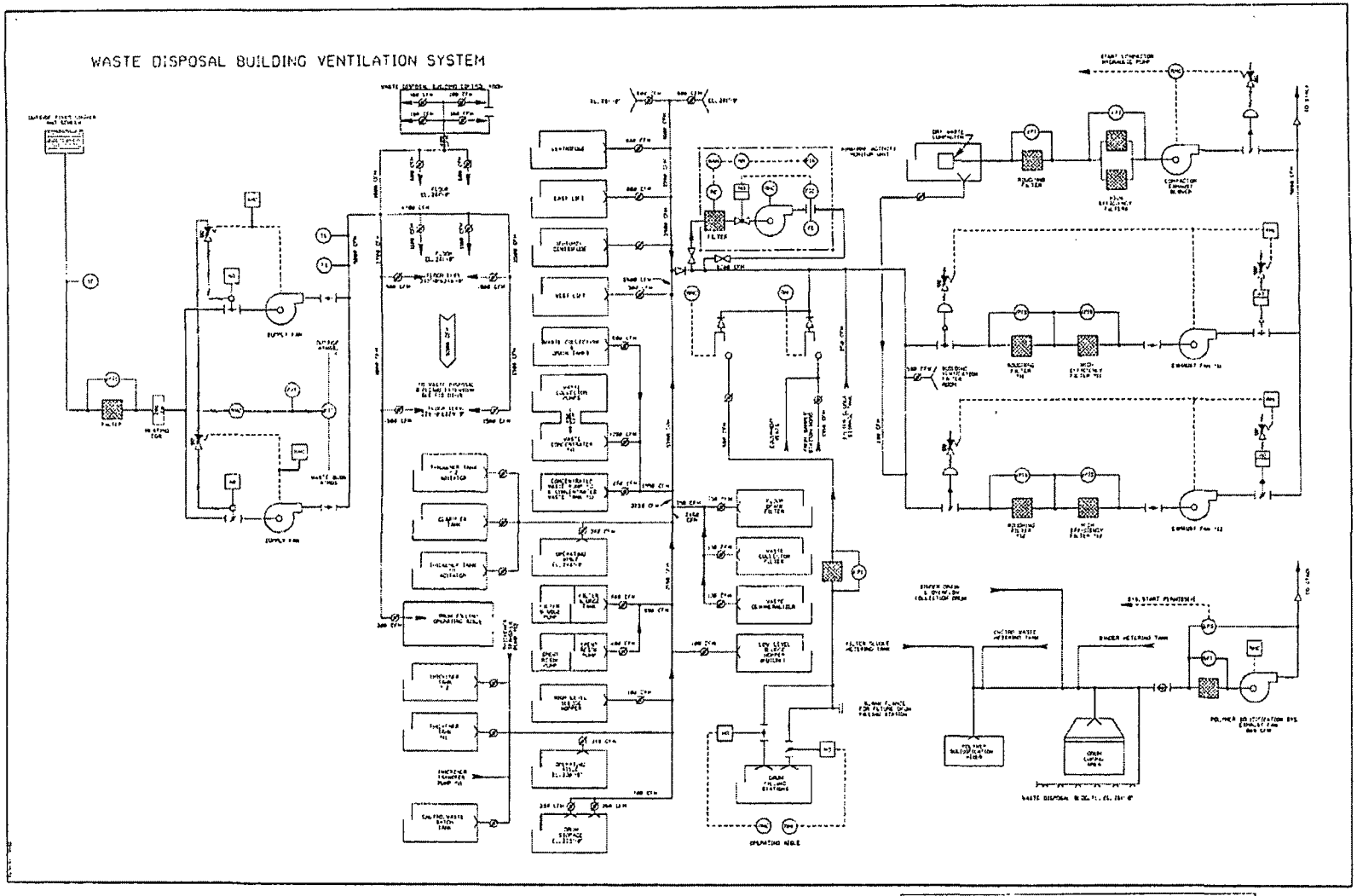

FIGURE D-4
WASTE DISPOSAL BUILDING VENT SYSTEM
NINE MILE POINT UNIT 1
OFFSITE DOSE CALC. MANUAL

STACK - PLAN AND ELEVATION

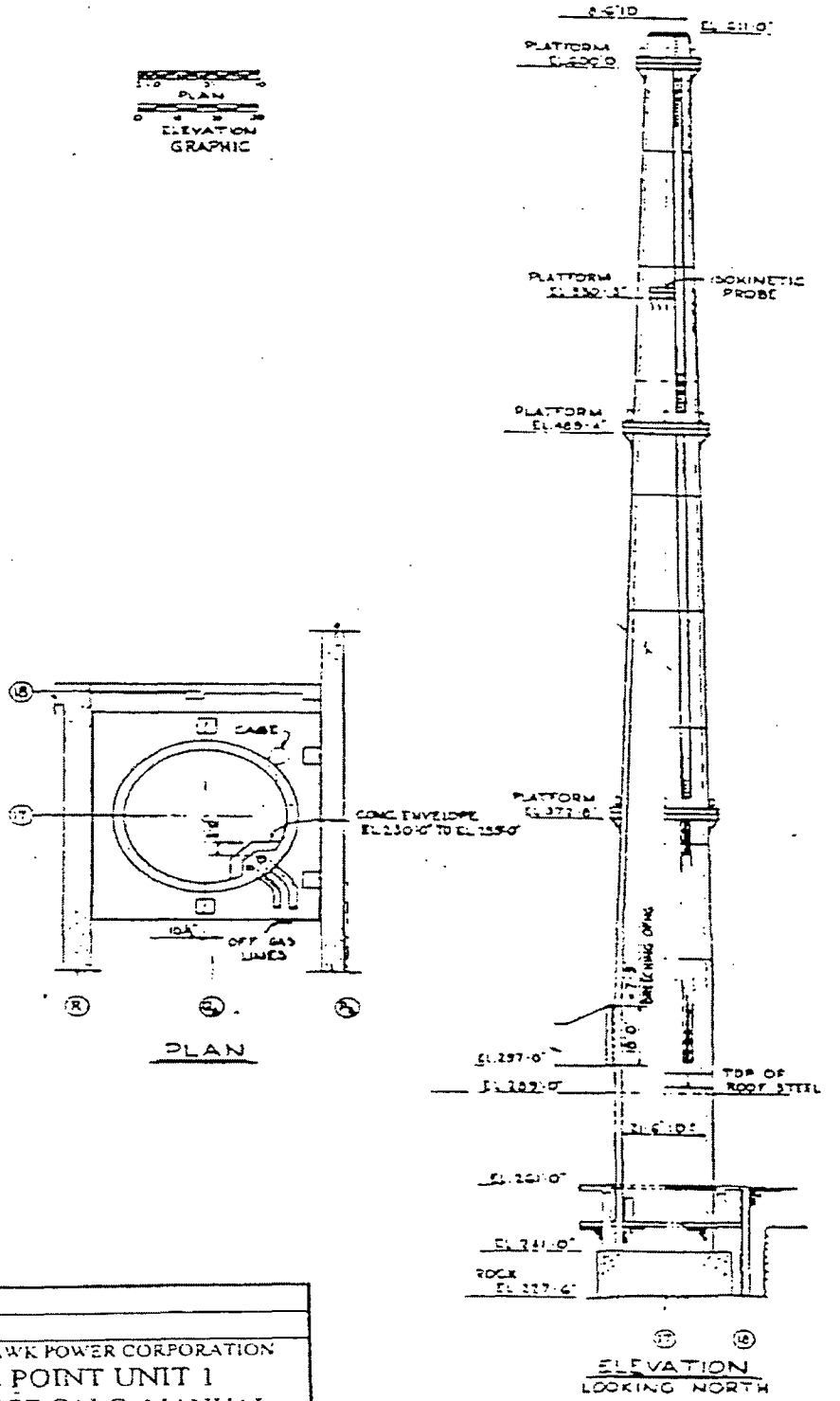

FIGURE D-5
NMP-1 STACK
NIAGARA MOHAWK POWER CORPORATION
NINE MILE POINT UNIT 1
OFFSITE DOSE CALC. MANUAL

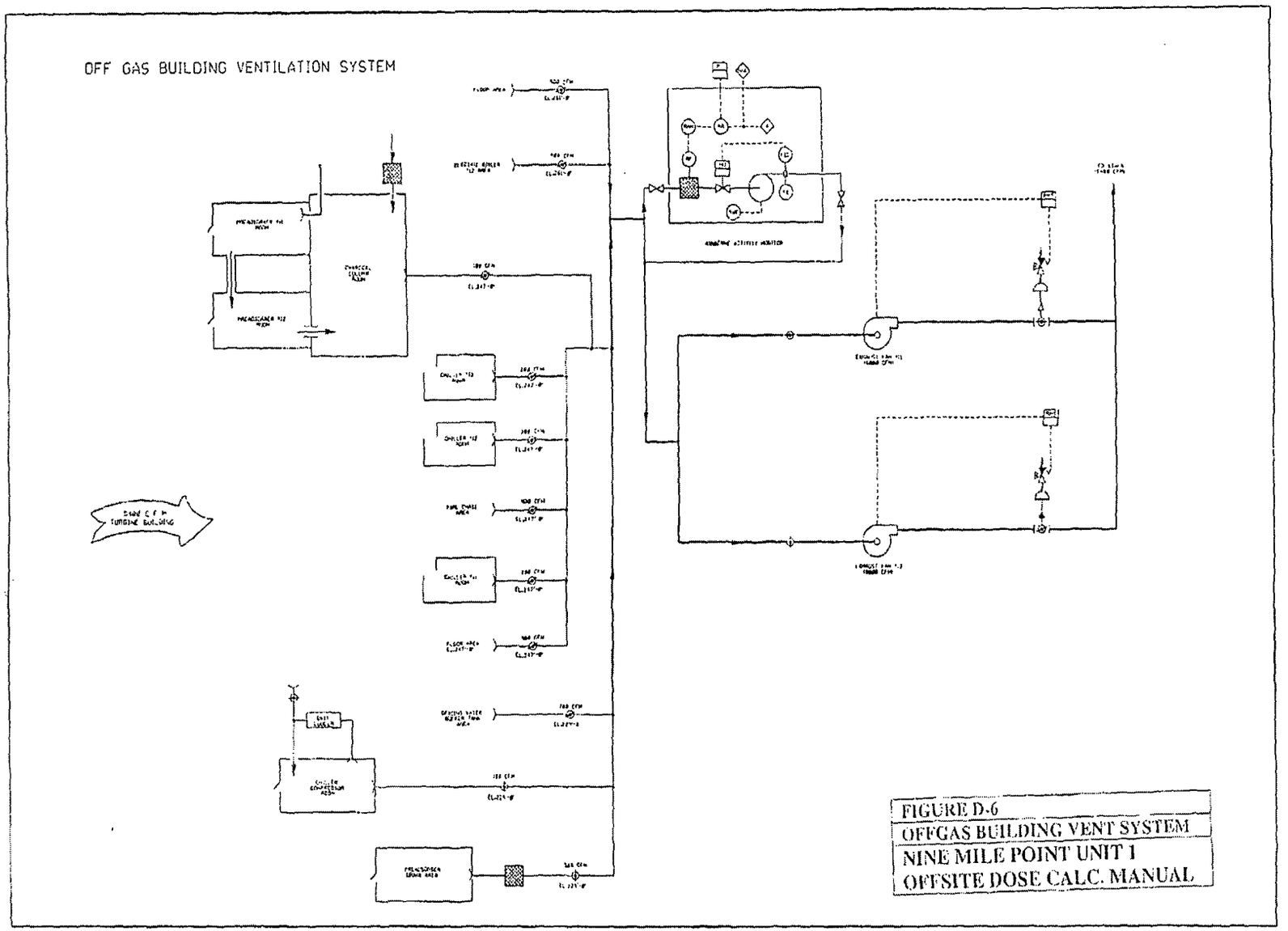

FIGURE D-6
OFFGAS BUILDING VENT SYSTEM
NINE MILE POINT UNIT 1
OFFSITE DOSE CALC. MANUAL

This Page and Figure Deleted.

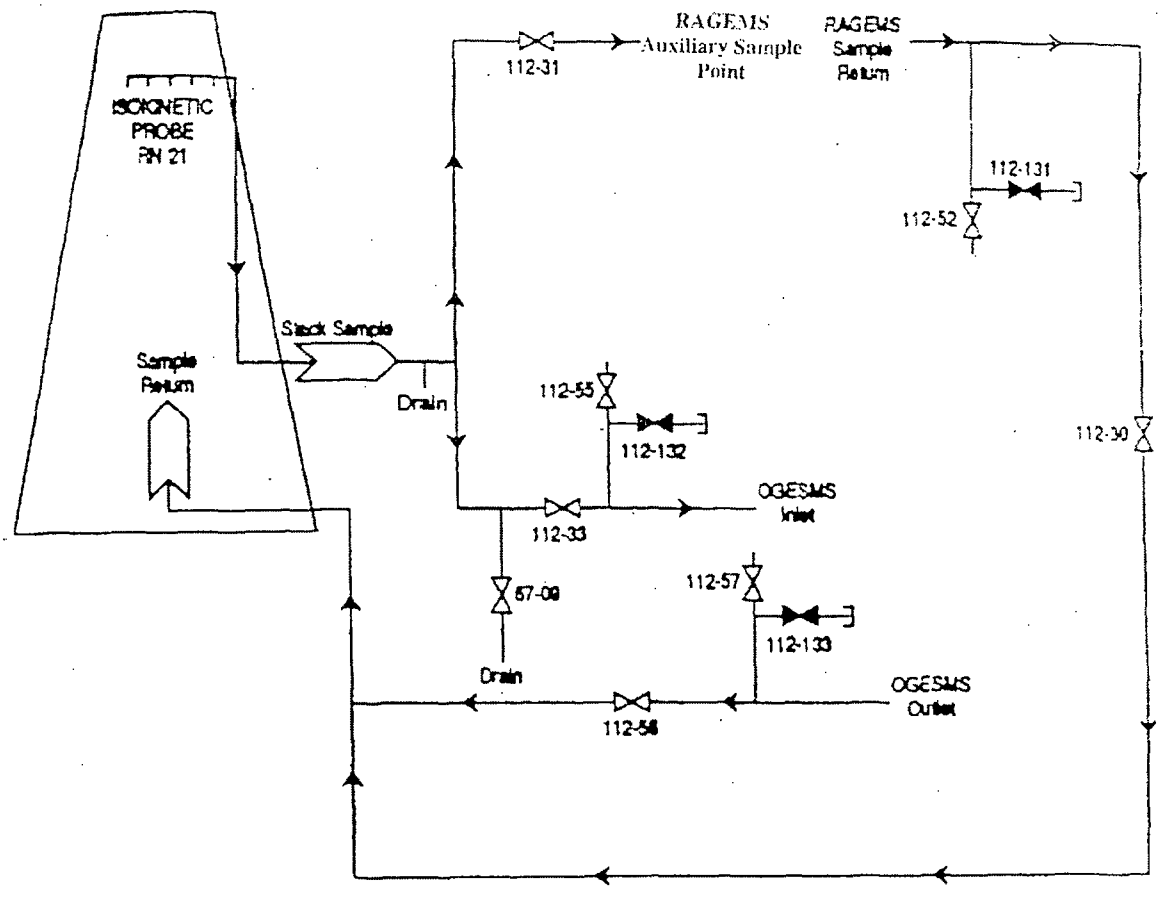

Figure D- 8
Stack Sample and Sample Return
NIAGARA MOHAWK POWER CORPORATION **NINE MILE POINT - UNIT 1** OFFSITE DOSE CALC. MANUAL

This Page and Figure Deleted.

This Page and Figure Deleted.

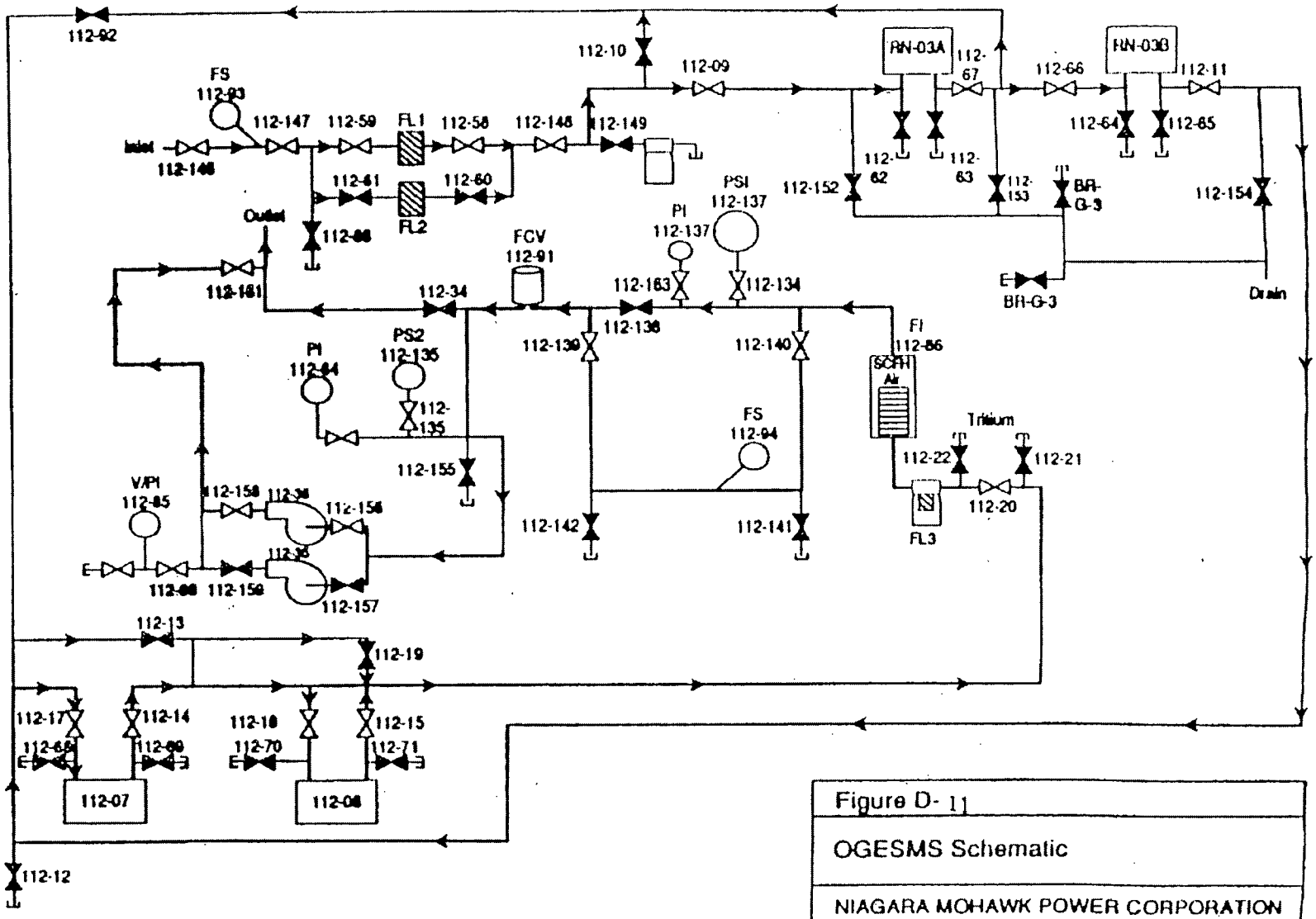

Figure D- 11

OGESMS Schematic

NIAGARA MOHAWK POWER CORPORATION
NINE MILE POINT - UNIT 1
OFFSITE DOSE CALC. MANUAL