INDIANA MICHIGAN POWER®
A unit of American Electric Power

Indiana Michigan Power
Cook Nuclear Plant
One Cook Place
Bridgman, MI 49106
IndianaMichiganPower.com

April 29, 2013

AEP-NRC-2013-25
10 CFR 50.36(a)

Docket Nos.: 50-315
50-316

U. S. Nuclear Regulatory Commission
ATTN: Document Control Desk
Washington, DC 20555-0001

Donald C. Cook Nuclear Plant Units 1 and 2
ANNUAL RADIOACTIVE EFFLUENT RELEASE REPORT

In accordance with Technical Specification 5.6.3, Indiana Michigan Power Company, the licensee for Donald C. Cook Nuclear Plant (CNP) Units 1 and 2, is providing the Annual Radioactive Effluent Release Report as an enclosure to this letter. This report covers the period January 1, 2012, through December 31, 2012.

This letter contains no new or modified regulatory commitments. Should you have any questions, please contact Mr. Michael K. Scarpello, Regulatory Affairs Manager, at (269) 466-2649.

Sincerely,

Joel P. Gebbie
Site Vice President

KMH/dmb

Enclosure

c: J. T. King, MPSC
S. M. Krawec, AEP Ft. Wayne, w/o enclosure
MDEQ – WHMD/RPS
NRC Resident Inspector
C. D. Pederson, NRC Region III
T. J. Wengert, NRC Washington DC

IE48
NRR

ENCLOSURE TO AEP-NRC-2013-25

DONALD C. COOK NUCLEAR PLANT UNITS 1 AND 2
ANNUAL RADIOACTIVE EFFLUENT RELEASE REPORT

I. INTRODUCTION

This report discusses the radioactive discharges from Unit 1 and Unit 2 of the Donald C. Cook Nuclear Plant (CNP) during 2012. This is in accordance with the requirements of CNP Technical Specification 5.6.3.

The table below summarizes the pertinent statistics concerning the Plant's operation during the period from January 1, 2012, to December 31, 2012. The data in this table and the descriptive information on plant operation are based upon the respective Unit's Monthly Operating Reports, Performance Indicators and Control Room Logs for 2012.

Parameter	Unit 1	Unit 2
Gross Electrical Energy Generation (Megawatt Hour (MWH))	9,530,820	8,770,120
Unit Service Factor (Percent (%))	100.0	89.01
Unit Capacity Factor (Maximum Dependable Capacity) Net (%)	101.96	89.82

Unit 1 entered the reporting period in Mode 1 at Nominal Full Power (NFP). Small power adjustments were made to facilitate main turbine valve testing throughout the year. The unit exited the reporting period at NFP.

Unit 2 entered the reporting period in Mode 1 at NFP. Small power adjustments were made to facilitate main turbine valve testing throughout the year. The unit performed a normal downpower and was manually tripped on March 21, 2012, entering the refueling outage Unit 2 Cycle 20. The unit attained criticality on April 27, 2012. The unit automatically tripped at 91% power during power ascension to NFP on May 1, 2012, due to an issue with the generator winding compensation circuit trip setting. The unit attained criticality on May 2, 2012, and attained NFP on May 4, 2012. The unit performed a normal downpower to 25% power for planned maintenance on November 28, 2012, and returned to NFP on December 1, 2012. The unit exited the reporting period at NFP.

II. RADIOACTIVE RELEASES AND RADIOLOGICAL IMPACT ON MAN

Since a number of release points are common to both units, the release data from both units are combined to form this two-unit, Annual Radioactive Effluent Release Report. Appendix A1.1 through A2.4 of this report present the information in accordance with Section 5.6.3 of Appendix A to the Facility Operating Licenses, as specified in the Technical Specifications, Regulatory Guide 1.21, and 10 CFR Part 50, Appendix I.

The "MIDAS System" is a computer code that calculates doses due to radionuclides that were released from the CNP.

All liquid and gaseous releases were well within Offsite Dose Calculation Manual (ODCM) limits and Federal Limits.

There were no abnormal liquid releases and no abnormal gaseous releases in 2012.

Liquid Releases

During 2012 there were 67 liquid batch releases performed. The number of liquid batch releases for the four quarters in 2012 was 19, 27, 7, and 14, respectively.

Estimated doses (in millirem) to maximally exposed individuals via the liquid release pathways are given in Appendix A1.2 of this report.

Gaseous Releases

During the first quarter of 2012 there were eight batch releases from Gas Decay Tanks (GDT), two containment purges, and 103 Containment Pressure Reliefs (CPR). During the second quarter there were 88 CPR. During the third quarter there was one batch release from GDTs and 88 CPR. During the fourth quarter there was one batch release from GDTs and 92 CPR. The CPR continue to be listed as batch releases as described in Nuclear Regulatory Commission Inspections 50-315/89017 (DRSS); 50-316/89016 (DRSS) for CNP, dated June 13, 1989. Doses continue to be calculated utilizing continuous criteria as allowed by NUREG-0133. There were a total of ten GDT releases, two containment purges, and 371 CPR gaseous batch releases made during 2012.

In calculating the dose consequences for continuous and batch gaseous releases during 2012, the meteorological data measured at the time of the release were used.

The estimated doses (in millirem) to maximally exposed individuals via the gaseous release pathways are given in Appendix A1.2 of this report. For individuals that are within the site boundary, the occupancy time is sufficiently low to compensate for any increase in the atmospheric diffusion factor above that for the site boundary.

Solid Waste Disposition

There were 36 shipments of radioactive waste made during 2012. These included shipments made from the site to various radioactive waste processors for ultimate disposal.

III. METEOROLOGICAL

Appendices A2.1, A2.2, A2.3, and A2.4 of this report contain the cumulative joint frequency distribution tables of wind speed and wind direction, corresponding to the various atmospheric stability classes for the first, second, third and fourth quarters of 2012. Hourly meteorological data is available for review and/or inspection upon request.

IV. OFFSITE DOSE CALCULATION MANUAL (ODCM) CHANGES

PMP-6010-OSD-001, "Offsite Dose Calculation Manual," was revised during the report period.

V. TOTAL DOSE

Section 3.2.5 of the ODCM requires that the dose or dose commitment to a real individual from all uranium fuel cycle sources in Berrien County be limited to no more than 25 millirem to the total body or any organ (except the thyroid, which is limited to no more than 75 millirem) over a period of 12 consecutive months to show conformance with the requirements of 40 CFR Part 190. The maximum cumulative dose to an individual from liquid and gaseous effluents during 2012 was well within the ODCM limits. Measurements using thermoluminescent dosimeters (TLD) at 12 onsite stations indicate that the dose due to direct radiation is consistent with preoperational and current control (background) levels. This is fully evaluated in CNP's 2012 Annual Radiological Environmental Operating Report.

The annual dose to the maximum individual will be estimated by first, summing the quarterly total body air dose, the quarterly skin air dose, the quarterly critical organ dose from iodines and particulates (I&P), the quarterly total body dose from liquid effluents, the quarterly critical organ dose from liquid effluents, and the Radiological Environmental Monitoring Program onsite direct radiation TLD data. These quarterly values are summed with the annual C-14 dose and compared to the annual total body limit for conservative reasons. The table that follows here represents the above written description:

Dose (mrem)	1st Qtr	2nd Qtr	3rd Qtr	4th Qtr
I & P	2.69E-02	3.83E-02	4.14E-02	1.38E-02
Total Body Air	3.50E-04	4.50E-04	1.20E-03	4.80E-04
Skin	5.70E-04	7.10E-04	1.90E-03	7.70E-04
Liquid TB	1.84E-02	1.24E-02	7.23E-04	1.53E-02
Liquid Organ	1.84E-02	1.25E-02	7.24E-04	1.53E-02
C14 (Annual)				2.66E+00
Direct Radiation	0	0	0	0
Total	6.46E-02	6.44E-02	4.59E-02	2.71E+00
Grand Total Dose (Total Body or any other Organ) mrem				2.88E+00
Annual Dose Limit (mrem)				25
Percent of limit				1.15E+01

The following data reflects a comparison with 2009 annual dose data (the last year without calculating C-14 dose), 2012 annual dose data and 2012 annual dose data with C-14 added. This indicates that 2012 was a 'normal' single unit outage year with respect to radioactive effluents and allows for easier comparison. The table is presented as follows:

	Annual Dose (mrem)	% of limit
2009	2.60E-01	1.04
2012	2.21E-01	0.88
2012 with C-14	2.88	11.5

VI. RADIATION MONITORS INOPERABLE GREATER THAN 30 DAYS

There were no release pathways unmonitored for greater than 30 days.

VII. NOTEWORTHY CONDITIONS IDENTIFIED IN 2012

During the Fourth Quarter of 2012, an intermittent fault was identified on the CNP 60 Meter Meteorological Tower that resulted in a large number of invalid data hours collected. A Condition Report (2012-2305) was initiated and repair work performed. The issue appeared to be a connection to the Delta Temperature instrumentation. Repairs yielded better data collection results in December, and the system will be monitored more closely to ensure repairs were successful.

Carbon-14 Supplemental Information for the 2012 Annual Radioactive Effluent Release Report.

Carbon-14 (C-14) has a 5730 year half-life and is a naturally occurring radionuclide produced by cosmic ray interactions in the atmosphere. C-14 is a relatively low energy beta emitter. Nuclear weapons testing in the 1950s and 1960s significantly increased the amount of C-14 in the atmosphere. C-14 is also produced in commercial nuclear reactors, but the amounts produced are much less than those produced naturally, from weapons testing, or coal burning power plants. The inventory of carbon-14 in Earth's biosphere is about 300 million Curies, of which most is in the oceans.

Since the Nuclear Regulatory Commission (NRC) published Regulatory Guide 1.21, Revision 1, in 1974, the analytical methods for determining C-14 have improved. Coincidentally the radioactive effluents from commercial nuclear power plants over the same period have decreased to the point that C-14 is likely to be a principal radionuclide in gaseous effluents. Based on these reasons and a desire to adjust policy to align with international standards, the nuclear industry was required to report, starting in 2010, the quantity and dose impact of C-14 here in the United States. This year's report will be the third report by CNP including C-14, but the dose will be reported both with and without C-14 so a comparison to 2009 can be made keeping in mind the differing standards.

The quantity of C-14 released to the environment can be estimated by use of a C-14 source term scaling factor based on power generation (Ref. RG 1.21, Rev 2). A recent study recommends a source term scaling factor of approximately 9.0 to 9.8 Curies/GWe-yr for a Westinghouse Pressurized Water Reactor (PWR) (Ref. EPRI 1021106, "Estimation of Carbon-14 in Nuclear Plant Gaseous Effluents," dated December 23, 2010). A scaling factor of 9.4 Curies/GWe-yr was assumed for this report. Using this source term scaling factor and actual electrical generation (MWH) produced during 2012 results in a site total of 21.8 Curies released.

C-14 releases from PWRs occur primarily as a mix of organic carbon (methane) and inorganic (carbon dioxide). As a general rule, C-14 in the primary coolant is essentially all organic with a large fraction as gas. Any time the primary coolant is exposed to an

oxidizing environment (during shutdown or refueling), a slow transformation from an organic to an inorganic species occurs. Various studies documenting measured C-14 releases from PWRs suggest an average 80% organic fraction with the remainder being carbon dioxide. This equates to 4.36 Curies released as carbon dioxide which is available for the food pathway through photosynthesis to vegetation.

Dose is calculated utilizing the methodology prescribed in Regulatory Guide (RG) 1.109, Appendix C with the vegetation dose being the most predominant. A 'p' factor of 0.33 is determined utilizing the 256 hours of batch gaseous releases performed during 2012 and the assumption that 70% of the C-14 released is from gaseous batch releases. A further reduction to the vegetation and leafy vegetable dose is warranted due to the limited growing season in Michigan, which was conservatively limited to nine months.

The final results indicated a calculated organ dose from C-14 to a child at the site boundary of 2.10 mrem to the bone and a whole body dose of 0.557 mrem, for a combined total C-14 dose of 2.66 mrem. This is less than the dose limit of 15 mrem/unit to any organ prescribed in 10 CFR 50, Appendix I, and the 40 CFR Part 190 limit of 25 mrem for total body and for any organ ($\leq$75 mrem for thyroid).

VIII. CONCLUSION

Based on the information presented in this report, it is concluded that CNP Units 1 and 2 performed their intended design function with no demonstrable adverse affect on the health and safety of the general public.

TABLE OF CONTENTS

		Page
Table of Contents		i
I.	Introduction	1
II.	Radioactive Releases and Radiological Impact on Man	1
	Liquid Releases	2
	Gaseous Releases	2
	Solid Waste Disposition	2
III.	Meteorological	2
IV.	Offsite Dose Calculation Manual (ODCM) Changes	2
V.	Total Dose	3
VI.	Radiation Monitors Inoperable Greater Than 30 Days	4
VII.	Noteworthy Conditions Identified in 2012	4
VIII.	Conclusion	5

LIST OF APPENDICES

Appendix	Title
A1.1	2012 Effluent and Waste Disposal Annual Report – Supplemental Information
A1.2	Summary of Maximum Individual Doses: First Quarter, Second Quarter, Third Quarter, and Fourth Quarter 2012
A1.3	2012 Groundwater Protection Initiative (GPI) Sample Data
A2.1	Hours at Each Wind Speed and Direction: First Quarter, 2012
A2.2	Hours at Each Wind Speed and Direction: Second Quarter, 2012
A2.3	Hours at Each Wind Speed and Direction: Third Quarter, 2012
A2.4	Hours at Each Wind Speed and Direction: Fourth Quarter, 2012
A3.0	Offsite Dose Calculation Manual (ODCM) Changes

SUPPLEMENTAL INFORMATION

Facility: Donald C. Cook Nuclear Plant
Licensee: Indiana Michigan Power Company

1 REGULATORY LIMITS

1.1 Noble Gases

The air dose in unrestricted areas due to noble gases released in gaseous effluents shall be limited to the following:

1.1.1 During any calendar quarter, to ≤ 5 mrad/unit for gamma radiation and ≤ 10 mrad/unit for beta radiation.

1.1.2 During any calendar year, to ≤ 10 mrad/unit for gamma radiation and ≤ 20 mrad/unit for beta radiation.

1.2 Iodines - Particulates

The dose to a member of the public from radioiodines, radioactive materials in particulate form, and radionuclides other than noble gases with half-lives greater than eight days in gaseous effluents released to unrestricted areas shall be limited to the following:

1.2.1 During any calendar quarter to ≤ 7.5 mrem/unit to any organ.

1.2.2 During any calendar year to ≤ 15 mrem/unit to any organ.

1.3 Liquid Effluents

The dose or dose commitment to an individual from radioactive material in liquid effluents released to unrestricted areas shall be limited:

1.3.1 During any calendar quarter to ≤ 1.5 mrem/unit to the total body and to ≤ 5 mrem/unit to any organ.

1.3.2 During any calendar year to ≤ 3 mrem/unit to the total body and to ≤ 10 mrem/unit to any organ.

1.4 Total Dose

The dose or dose commitment to a real individual from all uranium fuel cycle sources is limited to ≤ 25 mrem to the total body or any organ (except the thyroid, which is limited to ≤ 75 mrem) over a period of 12 consecutive months.

2 MAXIMUM PERMISSIBLE CONCENTRATIONS

2.1 Gaseous Effluents

The dose rate due to radioactive materials released in gaseous effluents from the site shall be limited to the following:

2.1.1 For noble gases: ≤ 500 mrem/yr to the total body and ≤ 3000 mrem/yr to the skin.

2.1.2 For all radioiodines and for all radioactive materials in particulate form and radionuclides (other than noble gases) with half-lives greater than eight days: ≤ 1500 mrem/yr to any organ.

The above limits are provided to insure that radioactive material discharged in gaseous effluents will not result in the exposure of an individual in an unrestricted area to annual average concentrations exceeding the limits in 10 CFR Part 20, Appendix B, Table 2, Column 1.

2.2 Liquid Effluents

The concentration of radioactive material released at any time from the site to unrestricted areas shall be limited to the concentrations specified in 10 CFR Part 20, Appendix B, Table 2, Column 2, for radionuclides other than dissolved or entrained noble gases. For dissolved or entrained noble gases, the concentration shall be limited to 2×10^{-4} μCi/ml total activity.

3 AVERAGE ENERGY

The average energy ($\bar{E}$) of the radionuclide mixture in releases of fission and activation gases as defined in Regulatory Guide 1.21, Appendix B, Section A.3 is not applicable because the limits used for gaseous releases are based on calculated dose to members of the public. Release rates are calculated using an isotopic mix from actual samples rather than average energy.

4 MEASUREMENTS and APPROXIMATIONS of TOTAL RADIOACTIVITY

4.1 Fission and Activation Gases

Sampled and analyzed on a 4096 channel analyzer and HpGe detector. Tritium analysis is performed using liquid scintillation counters.

4.2 Iodines

Sampled on iodine adsorbing media and analyzed on a 4096 channel analyzer and HpGe detector.

4.3 Particulates

Sampled on a glass filter and analyzed on a 4096 channel analyzer and HpGe detector. Sr-89 and Sr-90 analyses performed by offsite vendor.

4.4 Liquid Effluents

Sampled and analyzed on a 4096 channel analyzer and HpGe detector. Tritium analysis is performed using liquid scintillation counter. Fe-55, Sr-89 and Sr-90 analyses performed by offsite vendor. Ni-63 is also currently being analyzed by the offsite vendor in response to evaluation of the 10 CFR 61 sample results.

5 BATCH RELEASES

5.1 Liquid

5.1.1 Number of batch releases:

19 releases in the 1st quarter, 2012
27 releases in the 2nd quarter, 2012
7 releases in the 3rd quarter, 2012
14 releases in the 4th quarter, 2012

5.1.2 Total time period for batch releases:

29,445 minutes

5.1.3 Maximum time for a batch release:

2,273 minutes

5.1.4 Average time period for batch release:

439 minutes

5.1.5 Minimum time period for a batch release:

71 minutes

5.1.6 Average stream flow during periods of release of effluent into a flowing stream:

8.23E+5 gpm circulating water

5.2 Gaseous

5.2.1 Number of batch releases:

113 releases in the 1st quarter, 2012
88 releases in the 2nd quarter, 2012
89 releases in the 3rd quarter, 2012
93 releases in the 4th quarter, 2012

5.2.2 Total time period for batch releases:

15,332 minutes

5.2.3 Maximum time for a batch release:

355 minutes

5.2.4 Average time period for batch release:

40 minutes

5.2.5 Minimum time period for a batch release:

9 minutes

6 ABNORMAL RELEASES

6.1 Liquid

6.1.1 Number of Releases:

1st Quarter	2nd Quarter	3rd Quarter	4th Quarter
0	0	0	0

6.1.2 Total activity released (Ci):

1st Quarter	2nd Quarter	3rd Quarter	4th Quarter
0	0	0	0

6.2 Gaseous

6.2.1 Number of Releases:

1st Quarter	2nd Quarter	3rd Quarter	4th Quarter
0	0	0	0

6.2.2 Total activity released (Ci):

1st Quarter	2nd Quarter	3rd Quarter	4th Quarter
0	0	0	0

2012 EFFLUENT AND WASTE DISPOSAL ANNUAL REPORT
GASEOUS EFFLUENTS-GROUND LEVEL RELEASES

CONTINUOUS MODE

Nuclides Released	Unit	1st Quarter	2nd Quarter	3rd Quarter	4th Quarter
1. FISSION GASES					
H3	Ci	5.18E+01	4.52E+01	3.02E+01	3.55E+01
KR85m	Ci	--------	--------	--------	--------
KR85	Ci	--------	--------	--------	--------
XE131m	Ci	--------	--------	--------	--------
XE133m	Ci	--------	--------	--------	--------
XE133	Ci	3.06E-01	--------	--------	--------
XE135	Ci	--------	--------	--------	--------
Total for Period	Ci	5.21E+01	4.52E+01	3.02E+01	3.55E+01
2. IODINES					
I131	Ci	5.02E-06	2.08E-05	--------	--------
I132	Ci	--------	--------	--------	--------
I133	Ci	--------	--------	--------	--------
Total for Period	Ci	5.02E-06	2.08E-05	--------	--------
3. PARTICULATES					
MN54	Ci	--------	--------	--------	--------
CO60	Ci	--------	--------	--------	--------
CS137	Ci	--------	--------	--------	--------
Total for Period	Ci	--------	--------	--------	--------

* DENOTES SUPPLEMENTAL ISOTOPES

2012 EFFLUENT AND WASTE DISPOSAL ANNUAL REPORT
GASEOUS EFFLUENTS-GROUND LEVEL RELEASES

BATCH MODE

Nuclides Released	Unit	1st Quarter	2nd Quarter	3rd Quarter	4th Quarter
1. FISSION GASES					
H3	Ci	9.01E-02	2.23E-02	2.83E-02	2.90E-02
AR41	Ci	4.41E-01	3.13E-01	4.91E-01	4.91E-01
KR85	Ci	5.60E-01	--------	4.07E-02	5.01E-02
XE131M	Ci	1.73E-03	--------	--------	--------
XE133M	Ci	5.90E-04	--------	--------	--------
XE133	Ci	3.80E-01	1.59E-02	1.89E-02	2.48E-02
XE135	Ci	1.96E-03	--------	--------	--------
Total for Period	Ci	1.48E+00	3.51E-01	5.38E-01	5.95E-01
2. IODINES					
I131	Ci	4.81E-08	--------	--------	--------
I133	Ci	--------	--------	--------	--------
Total for Period	Ci	4.81E-08	--------	--------	--------
3. PARTICULATES					
* BR80	Ci	--------	--------	--------	--------
* BR82	Ci	--------	--------	--------	--------
Total for Period	Ci	--------	--------	--------	--------

* DENOTES SUPPLEMENTAL ISOTOPES

2012 EFFLUENT AND WASTE DISPOSAL ANNUAL REPORT
GASEOUS EFFLUENTS-SUMMATION OF ALL RELEASES

		Units	1st Quarter	2nd Quarter	3rd Quarter	4th Quarter	Est. Total Error,%
A.	FISSION AND ACTIVATION GASES						
1.	Total Release	Ci	1.69E+00	3.29E-01	5.51E-01	5.65E-01	11.6
2.	Average release rate for period	uCi/sec	2.15E-01	4.19E-02	6.93E-02	7.11E-02	
3.	Percent of applicable limit*	% Gamma Beta	1.13E-02 4.42E-03	1.51E-02 2.70E-03	4.09E-02 7.30E-03	1.56E-02 2.79E-03	
B.	IODINES						
1.	Total I-131	Ci	5.06E-06	2.08E-05	0.00E+00	0.00E+00	14.1
2.	Average release rate for period	uCi/sec	6.44E-07	2.65E-06	0.00E+00	0.00E+00	
3.	Percent of applicable limit*	%	1.84E-06	7.54E-06	0.00E+00	0.00E+00	
C.	PARTICULATES						
1.	Particulates with half lives>8 days	Ci	0.00E+00	0.00E+00	0.00E+00	0.00E+00	N/A
2.	Average release rate for period	uCi/sec	0.00E+00	0.00E+00	0.00E+00	0.00E+00	
3.	Percent of applicable limit*	%	0.00E+00	0.00E+00	0.00E+00	0.00E+00	
4.	Gross alpha radioactivity	Ci	<7.15E-07	<7.30E-07	<7.63E-07	<8.46E-07	
D.	TRITIUM						
1.	Total Release	Ci	5.19E+01	4.52E+01	3.02E+01	3.54E+01	12.3
2.	Average release rate for period	uCi/sec	6.60E+00	5.75E+00	3.80E+00	4.45E+00	
3.	Percent of applicable limit*	%	3.76E-02	3.28E-02	2.17E-02	2.54E-02	

* Applicable limits are expressed in terms of dose. See Appendices A1.2-1 through A1.2-4

2012 EFFLUENT AND WASTE DISPOSAL ANNUAL REPORT
LIQUID EFFLUENTS
CONTINUOUS MODE

Nuclides Released	Unit	1st Quarter	2nd Quarter	3rd Quarter	4th Quarter
H3	Ci	6.38E-02	9.18E-02	1.09E-01	1.17E-01
CS137	Ci	--------	--------	--------	--------

BATCH MODE

Nuclides Released	Unit	1st Quarter	2nd Quarter	3rd Quarter	4th Quarter
H3	Ci	6.85E+02	4.59E+02	3.49E+01	7.07E+02
CR51	Ci	--------	2.73E-04	--------	--------
MN54	Ci	4.04E-06	3.39E-06	--------	--------
FE55	Ci	--------	--------	--------	--------
CO58	Ci	1.45E-04	2.49E-04	9.99E-06	1.06E-05
CO60	Ci	1.68E-04	1.44E-04	1.14E-05	2.22E-05
NI63	Ci	2.25E-04	--------	--------	--------
ZN65	Ci	--------	--------	--------	--------
ZR95	Ci	--------	8.71E-06	--------	--------
NB95	Ci	2.62E-06	1.13E-05	--------	--------
MO99	Ci	--------	--------	--------	--------
TC99m	Ci	3.11E-06	7.86E-07	--------	--------
AG110m	Ci	1.20E-05	7.42E-05	--------	2.11E-06
SB124	Ci	--------	--------	--------	--------
SB125	Ci	1.83E-05	3.54E-06	2.40E-06	--------
CS134	Ci	1.20E-06	--------	--------	--------
CS137	Ci	1.14E-05	1.65E-05	6.75E-07	--------
*XE135	Ci	--------	--------	--------	--------
I133	Ci	--------	--------	--------	--------
*XE133	Ci	1.18E-04	2.32E-04	--------	2.06E-05
*XE133m	Ci	--------	--------	2.02E-05	--------

* DENOTES SUPPLEMENTAL ISOTOPES

2012 EFFLUENT AND WASTE DISPOSAL ANNUAL REPORT
LIQUID EFFLUENTS-SUMMATION OF ALL RELEASES
BATCH MODE

		Units	1st Quarter	2nd Quarter	3rd Quarter	4th Quarter	Est. Total Error,%
A.	FISSION AND ACTIVATION PRODUCTS						
1.	Total Release	Ci	5.91E-04	7.84E-04	2.45E-05	3.49E-05	13.5
2.	Average diluted concentration during period	uCi/ml	3.55E-11	3.22E-11	4.85E-12	7.06E-13	
3.	Percent of applicable limit	%	4.88E-04	3.73E-04	1.00E-04	1.68E-05	
B.	TRITIUM						
1.	Total Release	Ci	6.85E+02	4.59E+02	3.50E+01	7.07E+02	10.1
2.	Average diluted concentration during period	uCi/ml	4.11E-05	1.88E-05	6.91E-06	1.43E-05	
3.	Percent of applicable limit	%	4.11E+00	1.88E+00	6.91E-01	1.43E+00	
C.	DISSOLVED AND ENTRAINED GASES						
1.	Total Release	Ci	1.18E-04	2.32E-04	0.00E+00	2.06E-05	15.8
2.	Average diluted concentration during period	uCi/ml	7.06E-12	9.51E-12	0.00E+00	4.17E-13	
3.	Percent of applicable limit	%	3.53E-06	4.76E-06	0.00E+00	2.08E-07	
D.	GROSS ALPHA RADIOACTIVITY TOTAL RELEASE	Ci	<1.09E-04	<1.54E-04	<4.00E-05	<7.99E-05	N/A
E.	VOLUME OF WASTE RELEASED	Liters	4.20E+07	4.19E+07	1.01E+08	7.30E+07	2.00
F.	VOLUME OF DILUTION WATER USED DURING PERIOD	Liters	7.29E+11	7.42E+11	8.23E+11	8.54E+11	3.48

2012 EFFLUENT AND WASTE DISPOSAL ANNUAL REPORT
LIQUID EFFLUENTS-SUMMATION OF ALL RELEASES
CONTINUOUS MODE

		Units	1st Quarter	2nd Quarter	3rd Quarter	4th Quarter	Est. Total Error,%
A.	FISSION AND ACTIVATION PRODUCTS						
1.	Total Release	Ci	0.00E+00	0.00E+00	0.00E+00	0.00E+00	N/A
2.	Average diluted concentration during period	uCi/ml	0.00E+00	0.00E+00	0.00E+00	0.00E+00	
3.	Percent of applicable limit	%	0.00E+00	0.00E+00	0.00E+00	0.00E+00	
B.	TRITIUM						
1.	Total Release	Ci	6.38E-02	9.18E-02	1.09E-01	1.17E-01	19.4
2.	Average diluted concentration during period	uCi/ml	8.96E-11	1.28E-10	1.33E-10	1.45E-10	
3.	Percent of applicable limit	%	8.96E-04	1.28E-03	1.33E-03	1.45E-03	
C.	DISSOLVED AND ENTRAINED GASES						
1.	Total Release	Ci	0.00E+00	0.00E+00	0.00E+00	0.00E+00	N/A
2.	Average diluted concentration during period	uCi/ml	0.00E+00	0.00E+00	0.00E+00	0.00E+00	
3.	Percent of applicable limit	%	0.00E+00	0.00E+00	0.00E+00	0.00E+00	
D.	GROSS ALPHA RADIOACTIVITY TOTAL RELEASE	Ci	0.00E+00	0.00E+00	0.00E+00	<9.61E-08	N/A
E.	VOLUME OF WASTE RELEASED	Liters	3.79E+07	4.05E+07	4.77E+07	6.51E+07	2.00
F.	VOLUME OF DILUTION WATER USED DURING PERIOD	Liters	7.12E+11	7.17E+11	8.17E+11	8.04E+11	3.48

2012 Effluent and Waste Disposal Annual Report
Solid Waste and Irradiated Fuel Shipments

Solid Waste Shipped Offsite for Burial or Disposal			
1) Type of Waste	Unit	Estimated amount	Estimated Total Error, %
a) Spent resins, filters, sludge, evaporator bottoms, etc.	m^3 Curies	1.71E+02 5.67E+02	1.00E+00 3.75E+00
b) Dry compressible waste, contaminated equipment, etc.	m^3 Curies	5.11E+02 5.60E+00	1.00E+00 6.48E+00
c) Irradiated components, control rods, etc.	m^3 Curies		
d) Other (contaminated soil)	m^3 Curies		

2) Estimate of Principle Radionuclide Composition								
a)	H-3	7 %	Kr-85	5 %	Sb-125	1 %	Cs-137	11 %
	Mn-54	1 %	Co-60	12 %	Cs-134	3 %		
	Fe-55	9 %	Ni-63	50 %	Ni-59	1 %		
b)	Ni-59	1 %	Co-58	5 %	Cr-51	4 %		
	Mn-54	1 %	Co-60	33 %	Zr/Nb-95	3 %		
	Fe-55	39 %	Ni-63	11 %	Cs-137	1 %	Ag-110M	2 %
d)								

3) Solid Waste Disposition		
No. of Shipments	Mode of Transportation	Destination
18	Truck	Memphis, TN
4	Truck	Oak Ridge, TN
13	Truck	Erwin, TN
1	Truck	Kingston, TN

4) Type of Containers used for Shipment: Containers used are excepted packages, Type A, Sea Land, metal boxes, drums, tankers, and high integrity containers (HICs).

5) Solidification Agent: There were no solidifications performed during this report period.

2012 Effluent and Waste Disposal Annual Report Yearly Release Rates

GASES		
Fission and Activation Gases	Total Release	3.11E+00 Curies
	Average Release Rate	9.83E-02 μCi/sec
	% of Applicable Limits*	γ 8.28E-02 % β 1.51E-02 %
Iodines	Total I-131 Release	2.59E-05 Curies
	Average Release Rate	8.18E-07 μCi/sec
	% of Applicable Limit*	9.38E-06 %
Particulates	Total Release	0.00 Curies
	Average Release Rate	0.00 μCi/sec
	% of Applicable Limit*	0.00 %
LIQUIDS		
Fission and Activation Products	Total Release	1.43E-03 Curies
	Average Diluted Concentration	1.50E-11 μCi/ml
	% of Applicable Limits*	Total Body 7.80E-01 % Organ 2.35E-01 %

* Applicable limits are expressed in terms of the annual 10 CFR 50, Appendix I, dose limits.

Site Boundary and Nearest Residence Listing

The following distances were used in the calculation of the maximum individual doses:

Sector	Direction	Boundary (Meters)	Nearest Residence (Meters)
A	N	651	659
B	NNE	617	660
C	NE	789	943
D	ENE	1497	1747
E	E	1274	1716
F	ESE	972	1643
G	SE	629	1640
H	SSE	594	964
J	S	594	997
K	SSW	629	942

Summary of Maximum Individual Doses

First Quarter 2012

EFFLUENT	APPLICABLE ORGAN	ESTIMATED DOSE (mrem)	AGE GROUP	LOCATION DIST DIR (M) (Toward)	% OF APPLICABLE LIMIT	LIMIT (mrem) QTR
Liquid	Total Body	1.84E-02	Child	Receptor 1	1.23E+00	1.5E+0
Liquid	Liver	1.84E-02	Child	Receptor 1	3.69E-01	5.0E+0
Noble Gas	Air Dose (Gamma-mrad)	5.66E-04	Any Age	651 (N)	1.13E-02	5.0E+0
Noble Gas	Air dose (Beta-mrad)	4.42E-04	Any Age	629 (SSW)	4.42E-03	1.0E+1
Iodines and Particulates	Total Body	2.69E-02	Child	659 (N)	3.58E-01	7.5E+0

Summary of Maximum Individual Doses

Second Quarter 2012

EFFLUENT	APPLICABLE ORGAN	ESTIMATED DOSE (mrem)	AGE GROUP	LOCATION DIST DIR (M) (Toward)	% OF APPLICABLE LIMIT	LIMIT (mrem) QTR
Liquid	Total Body	1.24E-02	Child	Receptor 1	8.29E-01	1.5E+0
Liquid	Liver	1.25E-02	Child	Receptor 1	2.49E-01	5.0E+0
Noble Gas	Air Dose (Gamma-mrad)	7.56E-04	Any Age	594 (S)	1.51E-02	5.0E+0
Noble Gas	Air dose (Beta-mrad)	2.70E-04	Any Age	594 (S)	2.70E-03	1.0E+1
Iodines and Particulates	Thyroid	3.83E-02	Child	997 (S)	5.10E-01	7.5E+0

Summary of Maximum Individual Doses

Third Quarter 2012

EFFLUENT	APPLICABLE ORGAN	ESTIMATED DOSE (mrem)	AGE GROUP	LOCATION DIST DIR (M) (Toward)	% OF APPLICABLE LIMIT	LIMIT (mrem) QTR
Liquid	Total Body	7.23E-04	Child	Receptor 1	4.82E-02	1.5E+0
Liquid	Liver	7.24E-04	Child	Receptor 1	1.45E-02	5.0E+0
Noble Gas	Air Dose (Gamma-mrad)	2.05E-03	Any Age	651 (N)	4.09E-02	5.0E+0
Noble Gas	Air dose (Beta-mrad)	7.30E-04	Any Age	651 (N)	7.30E-03	1.0E+1
Iodines and Particulates	Total Body	4.14E-02	Child	659 (N)	5.51E-01	7.5E+0

Summary of Maximum Individual Doses

Fourth Quarter 2012

EFFLUENT	APPLICABLE ORGAN	ESTIMATED DOSE (mrem)	AGE GROUP	LOCATION DIST DIR (M) (Toward)	% OF APPLICABLE LIMIT	LIMIT (mrem) QTR
Liquid	Total Body	1.53E-02	Child	Receptor 1	1.02E+00	1.5E+0
Liquid	GI-Tract	1.53E-02	Child	Receptor 1	3.06E-01	5.0E+0
Noble Gas	Air Dose (Gamma-mrad)	7.80E-04	Any Age	651 (N)	1.56E-02	5.0E+0
Noble Gas	Air dose (Beta-mrad)	2.79E-04	Any Age	651 (N)	2.79E-03	1.0E+1
Iodines and Particulates	Total Body	1.38E-02	Child	659 (N)	1.85E-01	7.5E+0

2012 GPI Sample Data

Samples analyzed for tritium. Values noted are in microcuries per milliliter (uCi/mL)
Lower Limit of Detection = LLD

Date	MW-22D	MW-22M	MW-22S	MW-24D	MW-24M	MW-24S	MW-25D	MW-25M
01/03/2012							<LLD	<LLD
01/17/2012	<LLD	<LLD	<LLD				<LLD	<LLD
01/23/2012				<LLD	<LLD	<LLD	<LLD	9.55E-7
02/02/2012							<LLD	1.40E-6
02/07/2012	<LLD	<LLD	<LLD	<LLD	<LLD	<LLD	<LLD	<LLD
02/15/2012							<LLD	1.23E-6
03/05/2012				<LLD	<LLD	<LLD		
03/12/2012	<LLD	<LLD	<LLD	<LLD	<LLD	<LLD	<LLD	1.16E-6
04/03/2012	<LLD	<LLD	<LLD	<LLD	<LLD	<LLD		
04/21/2012							<LLD	9.53E-7
05/14/2012	<LLD	<LLD	<LLD	<LLD	<LLD	<LLD	<LLD	<LLD
06/27/2012				<LLD	<LLD	<LLD	<LLD	<LLD
07/05/2012	<LLD	<LLD	<LLD	<LLD	<LLD	<LLD		
07/23/2012							<LLD	<LLD
07/31/2012	<LLD	<LLD	<LLD					
08/23/2012							<LLD	<LLD
08/31/2012	<LLD	<LLD	<LLD					
09/18/2012							<LLD	<LLD
09/27/2012	<LLD	<LLD	<LLD	<LLD	<LLD	<LLD		
10/16/2012	<LLD	<LLD	<LLD					
10/18/2012				<LLD	<LLD	<LLD	<LLD	<LLD
11/13/2012							<LLD	<LLD
12/03/2012							<LLD	<LLD
12/17/2012								<LLD *
12/19/2012		<LLD *						

(Note: Wells MW-22 through MW 27 are multi-port wells installed in the Fall of 2009, with three sample points placed at different depths. S= Shallow M= Middle D= Deep.)
(Note: A "*" symbol following a sample result denotes a gamma count was performed. Any gamma results above LLD will be additionally flagged and documented in the analysis section.)

2012 GPI Sample Data

Samples analyzed for tritium. Values noted are in microcuries per milliliter (uCi/mL)
Lower Limit of Detection = LLD

Date	MW-25S	MW-26D	MW-26M	MW-26S	MW-27D	MW-27M	MW-27S
01/03/2012	<LLD	<LLD	<LLD	<LLD	<LLD	<LLD	<LLD
01/17/2012	<LLD	<LLD	<LLD	<LLD	<LLD	<LLD	<LLD
01/23/2012	1.07E-6	<LLD	<LLD	<LLD	<LLD	<LLD	<LLD
02/02/2012	<LLD	<LLD	<LLD	<LLD	<LLD	<LLD	<LLD
02/07/2012	<LLD	<LLD	<LLD	<LLD	<LLD	<LLD	<LLD
02/15/2012	<LLD	<LLD	<LLD	<LLD	<LLD	<LLD	<LLD
03/12/2012	<LLD	<LLD	<LLD	1.06E-6	<LLD	<LLD	<LLD
04/21/2012	<LLD	<LLD	<LLD	9.88E-7	<LLD	<LLD	<LLD
05/14/2012	<LLD	<LLD	<LLD	<LLD	<LLD	<LLD	<LLD
06/27/2012	<LLD	<LLD	<LLD	<LLD	<LLD	<LLD	<LLD
07/23/2012	<LLD	<LLD	<LLD	<LLD	<LLD	<LLD	<LLD
08/23/2012	<LLD	<LLD	<LLD	<LLD	<LLD	<LLD	<LLD
09/18/2012	<LLD	<LLD	<LLD	<LLD	<LLD	<LLD	<LLD
10/18/2012	<LLD	<LLD	<LLD	<LLD	<LLD	<LLD	<LLD
11/13/2012	<LLD	<LLD	<LLD	<LLD	<LLD	<LLD	<LLD
12/03/2012	<LLD	<LLD	<LLD	<LLD	<LLD	<LLD	<LLD
12/17/2012			<LLD *			<LLD *	

(Note: Wells MW-22 through MW 27 are multi-port wells installed in the Fall of 2009, with three sample points placed at different depths. S= Shallow M= Middle D= Deep.)

(Note: A "*" symbol following a sample result denotes a gamma count was performed. Any gamma results above LLD will be additionally flagged and documented in the analysis section.)

2012 GPI Sample Data

Samples analyzed for tritium. Values noted are in microcuries per milliliter (uCi/mL)
Lower Limit of Detection = LLD

Date	W-9	W-10	W-11	W-12	W-13	W-14	W-15	OW-1
01/17/2012			<LLD		<LLD	<LLD		
01/23/2012							<LLD	
01/30/2012	<LLD						<LLD	
01/31/2012		<LLD	<LLD	<LLD	<LLD	<LLD		
02/08/2012							<LLD	
02/14/2012			<LLD		<LLD	<LLD		
03/12/2012			<LLD	<LLD	<LLD	<LLD	<LLD	
04/03/2012			<LLD	<LLD			<LLD	
04/17/2012					<LLD	<LLD		
05/01/2012		<LLD	<LLD	<LLD	<LLD	<LLD		
05/02/2012	<LLD							
05/03/2012							<LLD	
05/13/2012				<LLD				
06/04/2012				<LLD	<LLD	<LLD		
06/28/2012							<LLD	
07/05/2012				<LLD	<LLD	<LLD	<LLD	
07/30/2012	<LLD							
07/31/2012		<LLD	<LLD	<LLD	<LLD	<LLD	<LLD	
08/31/2012			<LLD	<LLD	<LLD			
09/27/2012			<LLD	<LLD	<LLD	<LLD		
09/28/2012							<LLD	
10/16/2012				<LLD				
10/29/2012		<LLD	<LLD	<LLD	<LLD	<LLD		
11/01/2012	<LLD						<LLD	
11/26/2012								<LLD
12/03/2012								<LLD
12/19/2012					<LLD *	<LLD *		

(Note: A "*" symbol following a sample result denotes a gamma count was performed. Any gamma results above LLD will be additionally flagged and documented in the analysis section.)

2012 GPI Sample Data

Samples analyzed for tritium. Values noted are in microcuries per milliliter (uCi/mL)
Lower Limit of Detection = LLD

Date	W-1	W-2	W-3	W-4	W-5	W-6	W-7	W-8
01/30/2012	<LLD		<LLD					<LLD
01/31/2012							<LLD	
02/02/2012		<LLD		<LLD	<LLD	<LLD		
05/01/2012	<LLD						<LLD	
05/02/2012		<LLD	<LLD					<LLD
05/03/2012				<LLD	<LLD	<LLD		
07/30/2012	<LLD	<LLD	<LLD					
07/31/2012							<LLD	<LLD
08/01/2012				<LLD	<LLD	<LLD		
10/29/2012							<LLD	
11/01/2012	<LLD	<LLD	<LLD					<LLD
11/05/2012				<LLD	<LLD	<LLD		

(Note: A "*" symbol following a sample result denotes a gamma count was performed. Any gamma results above LLD will be additionally flagged and documented in the analysis section.)

Samples analyzed for tritium. Values noted are in microcuries per milliliter (uCi/mL)
Lower Limit of Detection = LLD

Date	SG-1	SG-2	SG-4	SG-5	OW-4	MW-20	MW-21	95-11A
01/17/2012	<LLD	<LLD	<LLD	<LLD		<LLD	<LLD	
01/31/2012						<LLD	<LLD	
02/02/2012	<LLD	<LLD	<LLD	<LLD				
02/14/2012						<LLD	<LLD	
03/12/2012						<LLD	<LLD	
03/23/2012	<LLD	<LLD	<LLD	<LLD				
04/03/2012						<LLD	<LLD	
04/23/2012	<LLD	<LLD	<LLD	<LLD				
05/01/2012						<LLD	<LLD	
05/02/2012	<LLD	<LLD	<LLD	<LLD				
06/04/2012	<LLD	<LLD	<LLD	<LLD		<LLD	<LLD	
07/05/2012						<LLD	<LLD	
07/23/2012	<LLD	<LLD	<LLD	<LLD				
07/31/2012	<LLD	<LLD	<LLD	<LLD		<LLD	<LLD	
08/30/2012	<LLD	<LLD	<LLD	<LLD				
08/31/2012						<LLD	<LLD	
09/27/2012	<LLD	<LLD	<LLD	<LLD		<LLD	<LLD	
10/29/2012						<LLD	<LLD	
11/01/2012	<LLD	<LLD	<LLD	<LLD				
11/09/2012								<LLD*
11/26/2012					<LLD			
12/03/2012					<LLD			

(Note: A "*" symbol following a sample result denotes a gamma count was performed. Any gamma results above LLD will be additionally flagged and documented in the analysis section.)

2012 GPI Sample Data

Analysis of the Sample Data

The Groundwater Protection Initiative (GPI) Sample Data for 2012 indicates no groundwater contamination in excess of the reporting threshold of 2.00E-5 uCi/mL for tritium. Gamma spectroscopy was performed on all Radiological Environmental Monitoring Program wells quarterly. Those results are not actual GPI results so are not included in the ARERR, but are part of CNP's 2012 Annual Radiological Environmental Operating Report. There were no positively identified radionuclides from plant effluents detected in any of the well samples other than the expected tritium values associated with licensed releases of liquid effluents to the Absorption Pond and recapture tritium from licensed radioactive gaseous release points.

The LLD value used for counting of the samples varied between 8.58E-7 and 9.42E-7uCi/mL, depending on which scintillation counter was used. This is well below the required maximum LLD value of 2.00E-6 uCi/mL per the ODCM.

Values found above the LLD were not abnormal, unexpected, or inconsistent with past sampling history. The samples observed above LLD were expected results from the release of tritiated water into the Absorption Pond, a licensed pathway and part of plant design, or the result of recapture deposition of tritium from licensed radioactive gaseous release points.

Specifically, tritium results greater than LLD were the results of the recapture of tritium from gaseous effluents. Wells located inside the Protected Area of the plant are subject to recapture deposition of tritium and show occasional sample results above LLD values following rainfalls and snow melt. The results observed in 2012 continue to reflect normal expectations and behaviors as they relate to recaptured tritium. All gamma samples taken in support of the GPI were less the detectable.

The sample data indicates that no radioactive spills or unidentified leaks have occurred in 2012 impacting groundwater. The sample results indicate proper well placement to ensure the protection of the groundwater and early identification of any abnormal conditions involving groundwater. This is validated by the demonstrated ability to monitor percolation from the Absorption Pond and recaptured tritium in precipitation, with flow direction and behavior acting as described in the plant licensing documents.

Site: AEP COOK

Joint Frequency Distribution

Hours at Each Wind Speed and Direction

Total Period

Period of Record = 01/01/2012 - 03/31/2012

Elevation: **Speed:** SP10M **Direction:** DIR10M **Lapse:** DT60M

Stability Class: A Delta Temperature Extremely Unstable

Wind Speed (mph)

Wind Direction	1 - 4	4 - 8	8 - 13	13 - 19	19 - 25	≥ 25	Total
N	2	9	10	0	0	0	21
NNE	0	0	0	0	0	0	0
NE	2	6	0	0	0	0	8
ENE	1	11	2	0	0	0	14
E	1	6	0	0	0	0	7
ESE	0	5	0	0	0	0	5
SE	0	10	7	0	0	0	17
SSE	1	17	24	3	0	0	45
S	1	15	13	10	0	0	39
SSW	0	10	2	1	1	0	14
SW	0	19	15	1	0	0	35
WSW	1	15	5	1	0	0	22
W	2	20	6	1	0	0	29
WNW	3	20	4	0	0	0	27
NW	4	19	9	0	0	0	32
NNW	0	30	8	0	0	0	38
Total	18	212	105	17	1	0	353

Calm Hours not Included above for :	**Total Period**	1
Variable Direction Hours for:	**Total Period**	0
Invalid Hours for:	**Total Period**	145

Site: AEP COOK

Joint Frequency Distribution

Hours at Each Wind Speed and Direction

Total Period

Period of Record = 01/01/2012 - 03/31/2012

Elevation: **Speed:** SP10M **Direction:** DIR10M **Lapse:** DT60M

Stability Class: B Delta Temperature Moderately Unstable

Wind Speed (mph)

Wind Direction	1 - 4	4 - 8	8 - 13	13 - 19	19 - 25	≥ 25	Total
N	0	4	0	0	0	0	4
NNE	1	3	0	0	0	0	4
NE	1	0	0	0	0	0	1
ENE	2	3	0	0	0	0	5
E	2	2	0	0	0	0	4
ESE	1	3	0	0	0	0	4
SE	0	6	5	0	0	0	11
SSE	0	8	2	1	0	0	11
S	0	3	8	2	1	0	14
SSW	0	3	1	3	0	0	7
SW	0	9	4	0	0	0	13
WSW	0	4	3	0	0	0	7
W	0	5	3	0	0	0	8
WNW	0	11	2	0	0	0	13
NW	1	6	2	0	0	0	9
NNW	4	6	2	0	0	0	12
Total	12	76	32	6	1	0	127

Calm Hours not Included above for :	**Total Period**	1
Variable Direction Hours for:	**Total Period**	0
Invalid Hours for:	**Total Period**	145

Site: AEP COOK

Joint Frequency Distribution

Hours at Each Wind Speed and Direction

Total Period

Period of Record = 01/01/2012 - 03/31/2012

Elevation: **Speed:** SP10M **Direction:** DIR10M **Lapse:** DT60M

Stability Class: C Delta Temperature Slightly Unstable

Wind Speed (mph)

Wind Direction	1 - 4	4 - 8	8 - 13	13 - 19	19 - 25	≥ 25	Total
N	0	5	4	0	0	0	9
NNE	2	7	0	0	0	0	9
NE	2	9	0	0	0	0	11
ENE	2	4	0	0	0	0	6
E	3	8	0	0	0	0	11
ESE	2	3	0	0	0	0	5
SE	2	2	3	0	0	0	7
SSE	2	6	3	0	0	0	11
S	0	6	4	1	0	0	11
SSW	0	4	2	2	1	0	9
SW	1	6	3	0	0	0	10
WSW	0	1	2	1	0	0	4
W	0	5	2	0	0	0	7
WNW	1	2	3	1	0	0	7
NW	0	10	7	0	0	0	17
NNW	4	4	1	0	0	0	9
Total	21	82	34	5	1	0	143

Calm Hours not Included above for :	**Total Period**	1
Variable Direction Hours for:	**Total Period**	0
Invalid Hours for:	**Total Period**	145

Joint Frequency Distribution

Hours at Each Wind Speed and Direction

Total Period

Period of Record = 01/01/2012 - 03/31/2012

Elevation: **Speed:** SP10M **Direction:** DIR10M **Lapse:** DT60M

Stability Class: D Delta Temperature Neutral

Wind Speed (mph)

Wind Direction	1 - 4	4 - 8	8 - 13	13 - 19	19 - 25	≥ 25	Total
N	14	19	2	0	0	0	35
NNE	13	21	0	0	0	0	34
NE	7	17	0	0	0	0	24
ENE	5	19	0	0	0	0	24
E	7	18	2	0	0	0	27
ESE	9	12	4	0	0	0	25
SE	8	29	27	0	0	0	64
SSE	6	33	10	0	0	0	49
S	2	41	28	12	0	0	83
SSW	4	29	32	8	3	0	76
SW	2	22	26	7	0	0	57
WSW	3	14	29	8	0	0	54
W	2	27	32	5	0	0	66
WNW	9	21	21	10	0	0	61
NW	11	45	20	0	0	0	76
NNW	12	25	18	0	0	0	55
Total	114	392	251	50	3	0	810

Calm Hours not Included above for :	**Total Period**	1
Variable Direction Hours for:	**Total Period**	0
Invalid Hours for:	**Total Period**	145

Site: AEP COOK

Joint Frequency Distribution

Hours at Each Wind Speed and Direction

Total Period

Period of Record = 01/01/2012 - 03/31/2012

Elevation: **Speed:** SP10M **Direction:** DIR10M **Lapse:** DT60M

Stability Class: E Delta Temperature Slightly Stable

Wind Speed (mph)

Wind Direction	1 - 4	4 - 8	8 - 13	13 - 19	19 - 25	≥ 25	Total
N	8	1	0	0	0	0	9
NNE	8	2	0	0	0	0	10
NE	13	3	0	0	0	0	16
ENE	11	1	0	0	0	0	12
E	13	9	0	0	0	0	22
ESE	11	1	0	0	0	0	12
SE	17	21	4	0	0	0	42
SSE	19	40	13	0	0	0	72
S	9	22	15	5	0	0	51
SSW	4	6	13	1	0	0	24
SW	1	10	14	0	0	0	25
WSW	5	11	6	0	0	0	22
W	4	23	4	0	0	0	31
WNW	2	20	1	0	0	0	23
NW	4	7	0	0	0	0	11
NNW	8	2	0	1	0	0	11
Total	137	179	70	7	0	0	393

Calm Hours not Included above for :	**Total Period**	1
Variable Direction Hours for:	**Total Period**	0
Invalid Hours for:	**Total Period**	145

Site: AEP COOK

Joint Frequency Distribution

Hours at Each Wind Speed and Direction

Total Period

Period of Record = 01/01/2012 - 03/31/2012

Elevation: **Speed:** SP10M **Direction:** DIR10M **Lapse:** DT60M

Stability Class: F Delta Temperature Moderately Stable

Wind Speed (mph)

Wind Direction	1 - 4	4 - 8	8 - 13	13 - 19	19 - 25	≥ 25	Total
N	2	0	0	0	0	0	2
NNE	1	0	0	0	0	0	1
NE	6	0	0	0	0	0	6
ENE	6	0	0	0	0	0	6
E	9	0	0	0	0	0	9
ESE	9	0	0	0	0	0	9
SE	19	15	0	0	0	0	34
SSE	14	13	0	0	0	0	27
S	8	5	0	0	0	0	13
SSW	3	0	0	0	0	0	3
SW	5	2	0	0	0	0	7
WSW	0	0	0	0	0	0	0
W	0	0	0	0	0	0	0
WNW	2	0	0	0	0	0	2
NW	1	0	0	0	0	0	1
NNW	4	1	0	0	0	0	5
Total	89	36	0	0	0	0	125

Calm Hours not Included above for :	**Total Period**	1
Variable Direction Hours for:	**Total Period**	0
Invalid Hours for:	**Total Period**	145

Joint Frequency Distribution

Hours at Each Wind Speed and Direction

Total Period

Period of Record = 01/01/2012 - 03/31/2012

Elevation: **Speed:** SP10M **Direction:** DIR10M **Lapse:** DT60M

Stability Class: G Delta Temperature Extremely Stable

Wind Speed (mph)

Wind Direction	1 - 4	4 - 8	8 - 13	13 - 19	19 - 25	≥ 25	Total
N	0	0	0	0	0	0	0
NNE	4	0	0	0	0	0	4
NE	3	0	0	0	0	0	3
ENE	1	0	0	0	0	0	1
E	13	0	0	0	0	0	13
ESE	20	0	0	0	0	0	20
SE	11	0	0	0	0	0	11
SSE	16	1	0	0	0	0	17
S	8	1	0	0	0	0	9
SSW	2	0	0	0	0	0	2
SW	3	0	0	0	0	0	3
WSW	1	1	0	0	0	0	2
W	0	0	0	0	0	0	0
WNW	1	0	0	0	0	0	1
NW	1	0	0	0	0	0	1
NNW	0	0	0	0	0	0	0
Total	84	3	0	0	0	0	87

Calm Hours not Included above for :	**Total Period**	1
Variable Direction Hours for:	**Total Period**	0
Invalid Hours for:	**Total Period**	145

Site: AEP COOK

Joint Frequency Distribution

Hours at Each Wind Speed and Direction

Summary of All Stability Classes

Total Period

Period of Record = 01/01/2012 - 03/31/2012

Elevation: **Speed:** SP10M **Direction:** DIR10M **Lapse:** DT60M

Wind Speed (mph)

Wind Direction	1 - 4	4 - 8	8 - 13	13 - 19	19 - 25	≥ 25	Total
N	26	38	16	0	0	0	80
NNE	29	33	0	0	0	0	62
NE	34	35	0	0	0	0	69
ENE	28	38	2	0	0	0	68
E	48	43	2	0	0	0	93
ESE	52	24	4	0	0	0	80
SE	57	83	46	0	0	0	186
SSE	58	118	52	4	0	0	232
S	28	93	68	30	1	0	220
SSW	13	52	50	15	5	0	135
SW	12	68	62	8	0	0	150
WSW	10	46	45	10	0	0	111
W	8	80	47	6	0	0	141
WNW	18	74	31	11	0	0	134
NW	22	87	38	0	0	0	147
NNW	32	68	29	1	0	0	130
Total	475	980	492	85	6	0	2038

Calm Hours not Included above for :	**Total Period**	1
Variable Direction Hours for:	**Total Period**	0
Invalid Hours for:	**Total Period**	145
Valid Hours for this Stability Class for:	**Total Period**	2038
Total Hours for Period		2184

Hours are not adjusted for Daylight Savings Time

Site: AEP COOK

Joint Frequency Distribution

Hours at Each Wind Speed and Direction

Total Period

Period of Record = 04/01/2012 - 06/30/2012

Elevation: **Speed:** SP10M **Direction:** DIR10M **Lapse:** DT60M

Stability Class: A Delta Temperature Extremely Unstable

Wind Speed (mph)

Wind Direction	1 - 4	4 - 8	8 - 13	13 - 19	19 - 25	≥ 25	Total
N	13	97	29	0	0	0	139
NNE	1	7	3	0	0	0	11
NE	4	12	2	0	0	0	18
ENE	0	14	1	0	0	0	15
E	1	8	2	0	0	0	11
ESE	0	17	6	0	0	0	23
SE	3	25	1	0	0	0	29
SSE	2	35	3	0	0	0	40
S	3	38	31	1	0	0	73
SSW	3	8	27	3	0	0	41
SW	2	46	25	0	0	0	73
WSW	3	26	5	0	0	0	34
W	3	15	1	0	0	0	19
WNW	7	18	2	0	0	0	27
NW	6	29	1	0	0	0	36
NNW	13	100	10	0	0	0	123
Total	64	495	149	4	0	0	712

Calm Hours not Included above for :	**Total Period**	1
Variable Direction Hours for:	**Total Period**	0
Invalid Hours for:	**Total Period**	0

Joint Frequency Distribution

Hours at Each Wind Speed and Direction

Total Period

Period of Record = 04/01/2012 - 06/30/2012

Elevation: **Speed:** SP10M **Direction:** DIR10M **Lapse:** DT60M

Stability Class: B Delta Temperature Moderately Unstable

Wind Speed (mph)

Wind Direction	1 - 4	4 - 8	8 - 13	13 - 19	19 - 25	≥ 25	Total
N	3	9	1	0	0	0	13
NNE	5	1	0	0	0	0	6
NE	0	2	0	0	0	0	2
ENE	0	2	0	0	0	0	2
E	2	2	0	0	0	0	4
ESE	0	2	0	0	0	0	2
SE	0	4	0	0	0	0	4
SSE	1	4	0	0	0	0	5
S	1	5	4	0	0	0	10
SSW	0	4	6	0	0	0	10
SW	1	7	2	0	0	0	10
WSW	1	3	0	1	0	0	5
W	0	1	0	0	0	0	1
WNW	2	0	0	0	0	0	2
NW	1	2	0	0	0	0	3
NNW	3	4	1	0	0	0	8
Total	20	52	14	1	0	0	87

Calm Hours not Included above for :	**Total Period**	1
Variable Direction Hours for:	**Total Period**	0
Invalid Hours for:	**Total Period**	0

Site: AEP COOK

Joint Frequency Distribution

Hours at Each Wind Speed and Direction

Total Period

Period of Record = 04/01/2012 - 06/30/2012

Elevation: **Speed:** SP10M **Direction:** DIR10M **Lapse:** DT60M

Stability Class: C Delta Temperature Slightly Unstable

Wind Speed (mph)

Wind Direction	1 - 4	4 - 8	8 - 13	13 - 19	19 - 25	≥ 25	Total
N	7	3	1	0	0	0	11
NNE	4	1	0	0	0	0	5
NE	0	1	0	0	0	0	1
ENE	0	0	0	0	0	0	0
E	0	2	0	0	0	0	2
ESE	0	4	0	0	0	0	4
SE	0	2	0	0	0	0	2
SSE	3	2	0	0	0	0	5
S	0	5	2	0	0	0	7
SSW	1	1	2	1	0	0	5
SW	1	5	2	2	0	0	10
WSW	0	1	0	1	0	0	2
W	1	0	0	0	0	0	1
WNW	1	2	1	0	0	0	4
NW	2	4	0	0	0	0	6
NNW	6	4	1	0	0	0	11
Total	26	37	9	4	0	0	76

Calm Hours not Included above for :	**Total Period**	1
Variable Direction Hours for:	**Total Period**	0
Invalid Hours for:	**Total Period**	0

Site: AEP COOK

Joint Frequency Distribution

Hours at Each Wind Speed and Direction

Total Period

Period of Record = 04/01/2012 - 06/30/2012

Elevation: **Speed:** SP10M **Direction:** DIR10M **Lapse:** DT60M

Stability Class: D Delta Temperature Neutral

Wind Speed (mph)

Wind Direction	1 - 4	4 - 8	8 - 13	13 - 19	19 - 25	≥ 25	Total
N	28	45	7	0	0	0	80
NNE	19	9	0	0	0	0	28
NE	8	12	0	0	0	0	20
ENE	9	8	0	0	0	0	17
E	5	14	0	0	0	0	19
ESE	4	31	3	0	0	0	38
SE	7	11	1	0	0	0	19
SSE	3	15	1	0	0	0	19
S	1	18	13	3	0	0	35
SSW	5	11	35	4	0	0	55
SW	6	13	13	2	0	0	34
WSW	4	3	0	0	0	0	7
W	8	5	0	0	0	0	13
WNW	6	9	0	0	0	0	15
NW	12	6	0	0	0	0	18
NNW	24	30	5	0	0	0	59
Total	149	240	78	9	0	0	476

Calm Hours not Included above for :	**Total Period**	1
Variable Direction Hours for:	**Total Period**	0
Invalid Hours for:	**Total Period**	0

Site: AEP COOK

Joint Frequency Distribution

Hours at Each Wind Speed and Direction

Total Period

Period of Record = 04/01/2012 - 06/30/2012

Elevation: **Speed:** SP10M **Direction:** DIR10M **Lapse:** DT60M

Stability Class: E Delta Temperature Slightly Stable

Wind Speed (mph)

Wind Direction	1 - 4	4 - 8	8 - 13	13 - 19	19 - 25	≥ 25	Total
N	23	6	0	0	0	0	29
NNE	28	9	0	0	0	0	37
NE	22	9	0	0	0	0	31
ENE	21	7	0	0	0	0	28
E	14	7	0	0	0	0	21
ESE	22	21	0	0	0	0	43
SE	8	18	0	0	0	0	26
SSE	11	14	1	0	0	0	26
S	11	45	4	2	0	0	62
SSW	4	20	4	1	0	0	29
SW	5	18	2	0	0	0	25
WSW	4	5	0	0	0	0	9
W	9	1	0	0	0	0	10
WNW	4	2	0	0	0	0	6
NW	4	3	0	0	0	0	7
NNW	15	9	0	0	0	0	24
Total	205	194	11	3	0	0	413

Calm Hours not Included above for :	**Total Period**	1
Variable Direction Hours for:	**Total Period**	0
Invalid Hours for:	**Total Period**	0

Site: AEP COOK

Joint Frequency Distribution

Hours at Each Wind Speed and Direction

Total Period

Period of Record = 04/01/2012 - 06/30/2012

Elevation: **Speed:** SP10M **Direction:** DIR10M **Lapse:** DT60M

Stability Class: F Delta Temperature Moderately Stable

Wind Speed (mph)

Wind Direction	1 - 4	4 - 8	8 - 13	13 - 19	19 - 25	≥ 25	Total
N	6	0	0	0	0	0	6
NNE	5	0	0	0	0	0	5
NE	19	1	0	0	0	0	20
ENE	17	0	0	0	0	0	17
E	15	0	0	0	0	0	15
ESE	23	1	0	0	0	0	24
SE	19	2	0	0	0	0	21
SSE	29	1	0	0	0	0	30
S	11	7	0	0	0	0	18
SSW	6	1	0	0	0	0	7
SW	3	0	0	0	0	0	3
WSW	0	1	0	0	0	0	1
W	2	0	0	0	0	0	2
WNW	3	0	0	0	0	0	3
NW	2	1	0	0	0	0	3
NNW	4	0	0	0	0	0	4
Total	164	15	0	0	0	0	179

Calm Hours not Included above for :	**Total Period**	1
Variable Direction Hours for:	**Total Period**	0
Invalid Hours for:	**Total Period**	0

Joint Frequency Distribution

Hours at Each Wind Speed and Direction

Total Period

Period of Record = 04/01/2012 - 06/30/2012

Elevation: **Speed:** SP10M **Direction:** DIR10M **Lapse:** DT60M

Stability Class: G Delta Temperature Extremely Stable

Wind Speed (mph)

Wind Direction	1 - 4	4 - 8	8 - 13	13 - 19	19 - 25	≥ 25	Total
N	5	0	0	0	0	0	5
NNE	4	0	0	0	0	0	4
NE	15	0	0	0	0	0	15
ENE	32	0	0	0	0	0	32
E	35	0	0	0	0	0	35
ESE	26	0	0	0	0	0	26
SE	39	1	0	0	0	0	40
SSE	33	0	0	0	0	0	33
S	16	1	0	0	0	0	17
SSW	8	0	0	0	0	0	8
SW	5	0	1	0	0	0	6
WSW	6	0	0	0	0	0	6
W	2	0	0	0	0	0	2
WNW	6	0	0	0	0	0	6
NW	4	0	0	0	0	0	4
NNW	1	0	0	0	0	0	1
Total	237	2	1	0	0	0	240

Calm Hours not Included above for :	**Total Period**	1
Variable Direction Hours for:	**Total Period**	0
Invalid Hours for:	**Total Period**	0

Site: AEP COOK

Joint Frequency Distribution

Hours at Each Wind Speed and Direction

Summary of All Stability Classes

Total Period

Period of Record = 04/01/2012 - 06/30/2012

Elevation: **Speed:** SP10M **Direction:** DIR10M **Lapse:** DT60M

Wind Speed (mph)

Wind Direction	1 - 4	4 - 8	8 - 13	13 - 19	19 - 25	≥ 25	Total
N	85	160	38	0	0	0	283
NNE	66	27	3	0	0	0	96
NE	68	37	2	0	0	0	107
ENE	79	31	1	0	0	0	111
E	72	33	2	0	0	0	107
ESE	75	76	9	0	0	0	160
SE	76	63	2	0	0	0	141
SSE	82	71	5	0	0	0	158
S	43	119	54	6	0	0	222
SSW	27	45	74	9	0	0	155
SW	23	89	45	4	0	0	161
WSW	18	39	5	2	0	0	64
W	25	22	1	0	0	0	48
WNW	29	31	3	0	0	0	63
NW	31	45	1	0	0	0	77
NNW	66	147	17	0	0	0	230
Total	865	1035	262	21	0	0	2183

Calm Hours not Included above for :	**Total Period**	1
Variable Direction Hours for:	**Total Period**	0
Invalid Hours for:	**Total Period**	0
Valid Hours for this Stability Class for:	**Total Period**	2183
Total Hours for Period		2184

Hours are not adjusted for Daylight Savings Time

Site: AEP COOK

Joint Frequency Distribution

Hours at Each Wind Speed and Direction

Total Period

Period of Record = 07/01/2012 - 09/30/2012

Elevation: **Speed:** SP10M **Direction:** DIR10M **Lapse:** DT60M

Stability Class: A Delta Temperature Extremely Unstable

Wind Speed (mph)

Wind Direction	1 - 4	4 - 8	8 - 13	13 - 19	19 - 25	> 25	Total
N	18	65	0	0	0	0	83
NNE	6	9	0	0	0	0	15
NE	1	2	0	0	0	0	3
ENE	2	4	0	0	0	0	6
E	1	6	0	0	0	0	7
ESE	7	4	0	0	0	0	11
SE	6	4	0	0	0	0	10
SSE	6	12	0	0	0	0	18
S	7	27	7	0	0	0	41
SSW	1	14	4	0	0	0	19
SW	2	80	12	0	0	0	94
WSW	7	40	2	0	0	0	49
W	4	21	0	0	0	0	25
WNW	3	18	0	0	0	0	21
NW	11	20	0	0	0	0	31
NNW	24	49	0	0	0	0	73
Total	106	375	25	0	0	0	506

Calm Hours not Included above for :	**Total Period**	3
Variable Direction Hours for:	**Total Period**	0
Invalid Hours for:	**Total Period**	137

Site: AEP COOK

Joint Frequency Distribution

Hours at Each Wind Speed and Direction

Total Period

Period of Record = 07/01/2012 - 09/30/2012

Elevation: **Speed:** SP10M **Direction:** DIR10M **Lapse:** DT60M

Stability Class: B Delta Temperature Moderately Unstable

Wind Speed (mph)

Wind Direction	1 - 4	4 - 8	8 - 13	13 - 19	19 - 25	≥ 25	Total
N	3	5	0	0	0	0	8
NNE	0	0	0	0	0	0	0
NE	0	0	0	0	0	0	0
ENE	0	2	0	0	0	0	2
E	1	2	0	0	0	0	3
ESE	1	1	0	0	0	0	2
SE	1	2	0	0	0	0	3
SSE	3	2	0	0	0	0	5
S	3	4	0	0	0	0	7
SSW	2	7	5	0	0	0	14
SW	3	4	3	0	0	0	10
WSW	2	4	0	0	0	0	6
W	1	2	0	0	0	0	3
WNW	4	3	1	0	0	0	8
NW	5	1	0	0	0	0	6
NNW	5	1	0	0	0	0	6
Total	34	40	9	0	0	0	83

Calm Hours not Included above for :	**Total Period**	3
Variable Direction Hours for:	**Total Period**	0
Invalid Hours for:	**Total Period**	137

Site: AEP COOK

Joint Frequency Distribution

Hours at Each Wind Speed and Direction

Total Period

Period of Record = 07/01/2012 - 09/30/2012

Elevation: **Speed:** SP10M **Direction:** DIR10M **Lapse:** DT60M

Stability Class: C Delta Temperature Slightly Unstable

Wind Speed (mph)

Wind Direction	1 - 4	4 - 8	8 - 13	13 - 19	19 - 25	> 25	Total
N	3	5	0	0	0	0	8
NNE	1	1	0	0	0	0	2
NE	1	0	0	0	0	0	1
ENE	1	0	0	0	0	0	1
E	3	2	0	0	0	0	5
ESE	2	1	0	0	0	0	3
SE	0	1	0	0	0	0	1
SSE	1	2	0	0	0	0	3
S	6	6	3	0	0	0	15
SSW	2	5	1	0	0	0	8
SW	4	7	0	0	0	0	11
WSW	0	3	0	0	0	0	3
W	2	2	0	0	0	0	4
WNW	0	1	0	0	0	0	1
NW	2	1	0	0	0	0	3
NNW	4	2	0	0	0	0	6
Total	32	39	4	0	0	0	75

Calm Hours not Included above for :	**Total Period**	3
Variable Direction Hours for:	**Total Period**	0
Invalid Hours for:	**Total Period**	137

Site: AEP COOK

Joint Frequency Distribution

Hours at Each Wind Speed and Direction

Total Period

Period of Record = 07/01/2012 - 09/30/2012

Elevation: **Speed:** SP10M **Direction:** DIR10M **Lapse:** DT60M

Stability Class: D Delta Temperature Neutral

Wind Speed (mph)

Wind Direction	1 - 4	4 - 8	8 - 13	13 - 19	19 - 25	≥ 25	Total
N	28	27	0	0	0	0	55
NNE	15	6	0	0	0	0	21
NE	12	6	0	0	0	0	18
ENE	2	8	0	0	0	0	10
E	11	4	0	0	0	0	15
ESE	8	1	0	0	0	0	9
SE	9	0	0	0	0	0	9
SSE	11	2	0	0	0	0	13
S	8	21	7	0	0	0	36
SSW	9	19	12	0	0	0	40
SW	8	21	0	0	0	0	29
WSW	3	2	0	0	0	0	5
W	5	4	1	0	0	0	10
WNW	4	5	0	0	0	0	9
NW	7	5	0	0	0	0	12
NNW	16	4	0	0	0	0	20
Total	156	135	20	0	0	0	311

Calm Hours not Included above for :	**Total Period**	3
Variable Direction Hours for:	**Total Period**	0
Invalid Hours for:	**Total Period**	137

Site: AEP COOK

Joint Frequency Distribution

Hours at Each Wind Speed and Direction

Total Period

Period of Record = 07/01/2012 - 09/30/2012

Elevation: **Speed:** SP10M **Direction:** DIR10M **Lapse:** DT60M

Stability Class: E Delta Temperature Slightly Stable

Wind Speed (mph)

Wind Direction	1 - 4	4 - 8	8 - 13	13 - 19	19 - 25	≥ 25	Total
N	35	18	0	0	0	0	53
NNE	34	4	0	0	0	0	38
NE	36	1	0	0	0	0	37
ENE	23	1	0	0	0	0	24
E	19	1	0	0	0	0	20
ESE	17	2	0	0	0	0	19
SE	13	4	0	0	0	0	17
SSE	19	4	0	0	0	0	23
S	27	46	7	0	0	0	80
SSW	15	22	7	0	0	0	44
SW	12	41	1	0	0	0	54
WSW	3	8	1	0	0	0	12
W	6	6	0	0	0	0	12
WNW	6	5	0	0	0	0	11
NW	3	10	0	0	0	0	13
NNW	12	9	0	0	0	0	21
Total	280	182	16	0	0	0	478

Calm Hours not Included above for :	**Total Period**	3
Variable Direction Hours for:	**Total Period**	0
Invalid Hours for:	**Total Period**	137

Site: AEP COOK

Joint Frequency Distribution

Hours at Each Wind Speed and Direction

Total Period

Period of Record = 07/01/2012 - 09/30/2012

Elevation: **Speed:** SP10M **Direction:** DIR10M **Lapse:** DT60M

Stability Class: F Delta Temperature Moderately Stable

Wind Speed (mph)

Wind Direction	1 - 4	4 - 8	8 - 13	13 - 19	19 - 25	≥ 25	Total
N	5	0	0	0	0	0	5
NNE	7	1	0	0	0	0	8
NE	19	0	0	0	0	0	19
ENE	18	0	0	0	0	0	18
E	26	0	0	0	0	0	26
ESE	20	0	0	0	0	0	20
SE	27	1	0	0	0	0	28
SSE	45	0	0	0	0	0	45
S	27	12	0	0	0	0	39
SSW	12	2	0	0	0	0	14
SW	2	0	0	0	0	0	2
WSW	0	0	0	0	0	0	0
W	1	0	0	0	0	0	1
WNW	2	0	0	0	0	0	2
NW	1	0	0	0	0	0	1
NNW	4	0	0	0	0	0	4
Total	216	16	0	0	0	0	232

Calm Hours not Included above for :	**Total Period**	3
Variable Direction Hours for:	**Total Period**	0
Invalid Hours for:	**Total Period**	137

Site: AEP COOK

Joint Frequency Distribution

Hours at Each Wind Speed and Direction

Total Period

Period of Record = 07/01/2012 - 09/30/2012

Elevation: **Speed:** SP10M **Direction:** DIR10M **Lapse:** DT60M

Stability Class: G Delta Temperature Extremely Stable

Wind Speed (mph)

Wind Direction	1 - 4	4 - 8	8 - 13	13 - 19	19 - 25	≥ 25	Total
N	6	0	0	0	0	0	6
NNE	7	0	0	0	0	0	7
NE	36	0	0	0	0	0	36
ENE	44	0	0	0	0	0	44
E	63	0	0	0	0	0	63
ESE	50	0	0	0	0	0	50
SE	53	0	0	0	0	0	53
SSE	64	0	0	0	0	0	64
S	36	1	0	0	0	0	37
SSW	10	0	0	0	0	0	10
SW	2	0	0	0	0	0	2
WSW	1	0	0	0	0	0	1
W	2	0	0	0	0	0	2
WNW	3	0	0	0	0	0	3
NW	4	0	0	0	0	0	4
NNW	1	0	0	0	0	0	1
Total	382	1	0	0	0	0	383

Calm Hours not Included above for :	**Total Period**	3
Variable Direction Hours for:	**Total Period**	0
Invalid Hours for:	**Total Period**	137

Site: AEP COOK

Joint Frequency Distribution

Hours at Each Wind Speed and Direction

Summary of All Stability Classes

Total Period

Period of Record = 07/01/2012 - 09/30/2012

Elevation: **Speed:** SP10M **Direction:** DIR10M **Lapse:** DT60M

Wind Speed (mph)

Wind Direction	1 - 4	4 - 8	8 - 13	13 - 19	19 - 25	≥ 25	Total
N	98	120	0	0	0	0	218
NNE	70	21	0	0	0	0	91
NE	105	9	0	0	0	0	114
ENE	90	15	0	0	0	0	105
E	124	15	0	0	0	0	139
ESE	105	9	0	0	0	0	114
SE	109	12	0	0	0	0	121
SSE	149	22	0	0	0	0	171
S	114	117	24	0	0	0	255
SSW	51	69	29	0	0	0	149
SW	33	153	16	0	0	0	202
WSW	16	57	3	0	0	0	76
W	21	35	1	0	0	0	57
WNW	22	32	1	0	0	0	55
NW	33	37	0	0	0	0	70
NNW	66	65	0	0	0	0	131
Total	1206	788	74	0	0	0	2068

Calm Hours not Included above for :	**Total Period**	3
Variable Direction Hours for:	**Total Period**	0
Invalid Hours for:	**Total Period**	137
Valid Hours for this Stability Class for:	**Total Period**	2068
Total Hours for Period		2208

Site: AEP COOK

Joint Frequency Distribution

Hours at Each Wind Speed and Direction

Total Period

Period of Record = 10/01/2012 - 12/31/2012

Elevation: **Speed:** SP10M **Direction:** DIR10M **Lapse:** DT60M

Stability Class: A Delta Temperature Extremely Unstable

Wind Speed (mph)

Wind Direction	1 - 4	4 - 8	8 - 13	13 - 19	19 - 25	≥ 25	Total
N	0	1	0	0	0	0	1
NNE	1	2	0	0	0	0	3
NE	0	6	0	0	0	0	6
ENE	0	4	0	0	0	0	4
E	0	6	0	0	0	0	6
ESE	0	1	0	0	0	0	1
SE	0	2	0	0	0	0	2
SSE	1	18	6	1	0	0	26
S	0	1	7	3	0	0	11
SSW	0	1	7	1	0	0	9
SW	0	1	3	0	0	0	4
WSW	0	3	2	0	0	0	5
W	0	4	1	0	0	0	5
WNW	0	1	1	0	0	0	2
NW	0	0	0	0	0	0	0
NNW	1	2	0	0	0	0	3
Total	3	53	27	5	0	0	88

Calm Hours not Included above for :	**Total Period**	1
Variable Direction Hours for:	**Total Period**	0
Invalid Hours for:	**Total Period**	873

Site: AEP COOK

Joint Frequency Distribution

Hours at Each Wind Speed and Direction

Total Period

Period of Record = 10/01/2012 - 12/31/2012

Elevation: **Speed:** SP10M **Direction:** DIR10M **Lapse:** DT60M

Stability Class: B Delta Temperature Moderately Unstable

Wind Speed (mph)

Wind Direction	1 - 4	4 - 8	8 - 13	13 - 19	19 - 25	≥ 25	Total
N	2	2	1	0	0	0	5
NNE	0	2	0	0	0	0	2
NE	0	2	0	0	0	0	2
ENE	0	4	0	0	0	0	4
E	1	0	0	0	0	0	1
ESE	0	0	0	0	0	0	0
SE	0	0	0	0	0	0	0
SSE	1	3	0	0	0	0	4
S	0	4	8	3	0	0	15
SSW	0	0	2	0	0	0	2
SW	0	2	2	0	0	0	4
WSW	0	1	0	0	0	0	1
W	0	3	0	0	0	0	3
WNW	0	4	1	0	0	0	5
NW	0	1	0	0	0	0	1
NNW	0	0	0	0	0	0	0
Total	4	28	14	3	0	0	49

Calm Hours not Included above for :	**Total Period**	1
Variable Direction Hours for:	**Total Period**	0
Invalid Hours for:	**Total Period**	873

Site: AEP COOK

Joint Frequency Distribution

Hours at Each Wind Speed and Direction

Total Period

Period of Record = 10/01/2012 00:00 - 12/31/2012 23:00

Elevation: **Speed:** SP10M **Direction:** DIR10M **Lapse:** DT60M

Stability Class: C Delta Temperature Slightly Unstable

Wind Speed (mph)

Wind Direction	1 - 4	4 - 8	8 - 13	13 - 19	19 - 25	≥ 25	Total
N	1	0	1	0	0	0	2
NNE	3	3	0	0	0	0	6
NE	2	1	0	0	0	0	3
ENE	1	2	0	0	0	0	3
E	1	1	0	0	0	0	2
ESE	1	0	0	0	0	0	1
SE	1	1	0	0	0	0	2
SSE	0	5	0	0	0	0	5
S	0	1	7	1	0	0	9
SSW	0	2	3	0	0	0	5
SW	2	0	0	0	0	0	2
WSW	0	0	0	0	0	0	0
W	0	0	0	0	0	0	0
WNW	0	0	0	0	0	0	0
NW	1	0	0	0	0	0	1
NNW	1	2	0	0	0	0	3
Total	14	18	11	1	0	0	44

Calm Hours not Included above for :	**Total Period**	1
Variable Direction Hours for:	**Total Period**	0
Invalid Hours for:	**Total Period**	873

Site: AEP COOK

Joint Frequency Distribution

Hours at Each Wind Speed and Direction

Total Period

Period of Record = 10/01/2012 - 12/31/2012

Elevation: **Speed:** SP10M **Direction:** DIR10M **Lapse:** DT60M

Stability Class: D Delta Temperature Neutral

Wind Speed (mph)

Wind Direction	1 - 4	4 - 8	8 - 13	13 - 19	19 - 25	≥ 25	Total
N	14	32	12	22	0	0	80
NNE	7	9	12	0	0	0	28
NE	15	16	1	0	0	0	32
ENE	16	5	0	0	0	0	21
E	12	26	0	0	0	0	38
ESE	11	10	2	0	0	0	23
SE	13	25	3	0	0	0	41
SSE	15	33	0	3	0	0	51
S	6	27	24	10	0	0	67
SSW	0	14	25	4	0	0	43
SW	3	11	4	0	0	0	18
WSW	1	16	8	0	0	0	25
W	2	21	3	0	0	0	26
WNW	5	20	6	0	0	0	31
NW	4	19	3	2	0	0	28
NNW	8	43	28	10	0	0	89
Total	132	327	131	51	0	0	641

Calm Hours not Included above for :	**Total Period**	1
Variable Direction Hours for:	**Total Period**	0
Invalid Hours for:	**Total Period**	873

Site: AEP COOK

Joint Frequency Distribution

Hours at Each Wind Speed and Direction

Total Period

Period of Record = 10/01/2012 - 12/31/2012

Elevation: **Speed:** SP10M **Direction:** DIR10M **Lapse:** DT60M

Stability Class: E Delta Temperature Slightly Stable

Wind Speed (mph)

Wind Direction	1 - 4	4 - 8	8 - 13	13 - 19	19 - 25	≥ 25	Total
N	3	0	0	0	0	0	3
NNE	3	0	0	0	0	0	3
NE	5	0	0	0	0	0	5
ENE	9	1	0	0	0	0	10
E	17	1	1	0	0	0	19
ESE	14	0	5	0	0	0	19
SE	29	10	7	0	0	0	46
SSE	27	31	6	0	0	0	64
S	11	49	23	5	0	0	88
SSW	1	16	15	0	0	0	32
SW	2	3	5	0	0	0	10
WSW	1	5	0	0	0	0	6
W	3	10	0	0	0	0	13
WNW	3	5	0	0	0	0	8
NW	2	2	1	0	0	0	5
NNW	3	3	1	3	0	0	10
Total	133	136	64	8	0	0	341

Calm Hours not Included above for :	**Total Period**	1
Variable Direction Hours for:	**Total Period**	0
Invalid Hours for:	**Total Period**	873

Site: AEP COOK

Joint Frequency Distribution

Hours at Each Wind Speed and Direction

Total Period

Period of Record = 10/01/2012 - 12/31/2012

Elevation: **Speed:** SP10M **Direction:** DIR10M **Lapse:** DT60M

Stability Class: F Delta Temperature Moderately Stable

Wind Speed (mph)

Wind Direction	1 - 4	4 - 8	8 - 13	13 - 19	19 - 25	≥ 25	Total
N	0	0	0	0	0	0	0
NNE	0	0	0	0	0	0	0
NE	2	0	0	0	0	0	2
ENE	4	0	0	0	0	0	4
E	7	1	0	0	0	0	8
ESE	16	0	0	0	0	0	16
SE	22	5	0	0	0	0	27
SSE	14	0	0	0	0	0	14
S	4	5	0	0	0	0	9
SSW	1	0	0	0	0	0	1
SW	0	0	0	0	0	0	0
WSW	0	0	0	0	0	0	0
W	0	0	0	0	0	0	0
WNW	0	0	0	0	0	0	0
NW	0	0	0	0	0	0	0
NNW	0	0	0	0	0	0	0
Total	70	11	0	0	0	0	81

Calm Hours not Included above for :	**Total Period**	1
Variable Direction Hours for:	**Total Period**	0
Invalid Hours for:	**Total Period**	873

Site: AEP COOK

Joint Frequency Distribution

Hours at Each Wind Speed and Direction

Total Period

Period of Record = 10/01/2012 - 12/31/2012

Elevation: **Speed:** SP10M **Direction:** DIR10M **Lapse:** DT60M

Stability Class: G Delta Temperature Extremely Stable

Wind Speed (mph)

Wind Direction	1 - 4	4 - 8	8 - 13	13 - 19	19 - 25	≥ 25	Total
N	1	0	0	0	0	0	1
NNE	0	0	0	0	0	0	0
NE	4	0	0	0	0	0	4
ENE	4	0	0	0	0	0	4
E	11	0	0	0	0	0	11
ESE	15	0	0	0	0	0	15
SE	23	0	0	0	0	0	23
SSE	21	0	0	0	0	0	21
S	9	1	0	0	0	0	10
SSW	0	0	0	0	0	0	0
SW	0	0	0	0	0	0	0
WSW	0	0	0	0	0	0	0
W	0	0	0	0	0	0	0
WNW	0	0	0	0	0	0	0
NW	0	1	0	0	0	0	1
NNW	0	0	0	0	0	0	0
Total	88	2	0	0	0	0	90

Calm Hours not Included above for :	**Total Period**	1
Variable Direction Hours for:	**Total Period**	0
Invalid Hours for:	**Total Period**	873

Site: AEP COOK

Joint Frequency Distribution

Hours at Each Wind Speed and Direction

Summary of All Stability Classes

Total Period

Period of Record = 10/01/2012 - 12/31/2012

Elevation: **Speed:** SP10M **Direction:** DIR10M **Lapse:** DT60M

Wind Speed (mph)

Wind Direction	1 - 4	4 - 8	8 - 13	13 - 19	19 - 25	≥ 25	Total
N	21	35	14	22	0	0	92
NNE	14	16	12	0	0	0	42
NE	28	25	1	0	0	0	54
ENE	34	16	0	0	0	0	50
E	49	35	1	0	0	0	85
ESE	57	11	7	0	0	0	75
SE	88	43	10	0	0	0	141
SSE	79	90	12	4	0	0	185
S	30	88	69	22	0	0	209
SSW	2	33	52	5	0	0	92
SW	7	17	14	0	0	0	38
WSW	2	25	10	0	0	0	37
W	5	38	4	0	0	0	47
WNW	8	30	8	0	0	0	46
NW	7	23	4	2	0	0	36
NNW	13	50	29	13	0	0	105
Total	444	575	247	68	0	0	1334

Calm Hours not Included above for :	**Total Period**	1
Variable Direction Hours for:	**Total Period**	0
Invalid Hours for:	**Total Period**	873
Valid Hours for this Stability Class for:	**Total Period**	1334
Total Hours for Period		2208

OFF-SITE DOSE CALCULATION MANUAL CHANGES

The Off-Site Dose Calculation Manual, PMP-6010-OSD-001, was revised during this reporting period. A copy of Revision 24 is included as part of the report. The reasons for the changes and the Plant Operations Review Committee (PORC) approval are documented on the Review and Approval tracking form. These changes were determined to maintain the level of radioactive effluent control required by 10 CFR 20.1302, 40 CFR 190, 10 CFR 50.36a, and Appendix I to 10 CFR 50 and not adversely impact the accuracy or reliability of effluent, dose, or setpoint calculations.

Doc No.: PMP-6010-OSD-001 Rev No.: 024
Title: OFF-SITE DOSE CALCULATION MANUAL

Alteration Cat.: Minor Revision
CDI/50.59: N/A

PORC Mtg. No.: 4515
CARB Mtg. No.: N/A
Admin Hold AR No.: N/A
Superceding Proc(s): N/A

Temp Proc Exp Date: N/A
Temp Change Exp Date: N/A
Temp Proc/Change End: N/A
Effective Date: 2/16/2012 12:00:00 AM

Approvals

Name	Review/Approval Type/Capacity	Date
Wendzel, Regan	7 Approval Authority	02/06/2012 15:33
Harner, Jon	5 Management Review	01/31/2012 12:03
Zordell, Blair	3 Technical Review	01/24/2012 13:49
Hershberger, Robert	1 Cross-Discipline Review	01/17/2012 10:45
Ward, Daniel	1 Cross-Discipline Review	01/16/2012 14:44

Signature Comments

Approved per Plant Manager Q. Shane Lies.
Remove TS 6.8, format to ensure attachment is only one page instead of 2 w blank. Watch out for single headings hanging at the bottoms of pages, move to top of next page
No Problems

TABLE OF CONTENTS

1 PURPOSE AND SCOPE 4

2 DEFINITIONS AND ABBREVIATIONS 4

3 DETAILS 6

3.1 Calculation of Off-Site Doses 6

3.1.1 Gaseous Effluent Releases 6

3.1.2 Liquid Effluent Releases 11

3.2 Limits of Operation and Surveillances of the Effluent Release Points 14

3.2.1 Radioactive Liquid Effluent Monitoring Instrumentation 14

3.2.2 Radioactive Gaseous Effluent Monitoring Instrumentation 16

3.2.3 Liquid Effluents 17

a. Concentration Excluding Releases via the Turbine Room Sump (TRS) Discharge 17

b. Concentration of Releases from the TRS Discharge 17

c. Dose 18

d. Liquid Radwaste Treatment System 18

3.2.4 Gaseous Effluents 21

a. Dose Rate 21

b. Dose – Noble Gases 21

c. Dose – Iodine-131, Iodine-133, Tritium, and Radioactive Material in Particulate Form 22

d. Gaseous Radwaste Treatment 22

3.2.5 Radioactive Effluents – Total Dose 25

3.3 Calculation of Alarm/Trip Setpoints 26

3.3.1 Liquid Monitors 27

a. Liquid Batch Monitor Setpoint Methodology 27

b. Liquid Continuous Monitor Setpoint Methodology 28

3.3.2 Gaseous Monitors 30

a. Plant Unit Vent 31

b. Waste Gas Storage Tanks 34

c. Containment Purge and Exhaust System 34

d. Steam Jet Air Ejector System (SJAE) 35

e. Gland Seal Condenser Exhaust 36

3.4 Radioactive Effluents Total Dose 36
3.5 Radiological Environmental Monitoring Program (REMP) 36
3.5.1 Purpose of the REMP 36
3.5.2 Conduct of the REMP 37
3.5.3 Annual Land Use Census 39
3.5.4 Interlaboratory Comparison Program 40
3.6 Meteorological Model 41
3.7 Reporting Requirements 41
3.7.1 Annual Radiological Environmental Operating Report (AREOR) 41
3.7.2 Annual Radiological Effluent Release Report (ARERR) 42
3.8 10 CFR 50.75 (g) Implementation 44
3.9 Reporting/Management Review 44
4 FINAL CONDITIONS 45
5 REFERENCES 45

SUPPLEMENTS

Attachment 3.1 Dose Factors for Various Pathways ..... Pages 48 - 51
Attachment 3.2 Radioactive Liquid Effluent Monitoring Instruments ..... Pages 52 - 54
Attachment 3.3 Radioactive Liquid Effluent Monitoring Instrumentation Surveillance Requirements ..... Pages 55 - 56
Attachment 3.4 Radioactive Gaseous Effluent Monitoring Instrumentation ..... Pages 57 - 59
Attachment 3.5 Radioactive Gaseous Effluent Monitoring Instrumentation Surveillance Requirements ..... Pages 60 - 61
Attachment 3.6 Radioactive Liquid Waste Sampling and Analysis Program ..... Pages 62 - 63
Attachment 3.7 Radioactive Gaseous Waste Sampling and Analysis Program ..... Pages 64 - 65
Attachment 3.8 Multiple Release Point Factors for Release Points ..... Page 66

Attachment 3.9 Liquid Effluent Release Systems ..... Page 67

Attachment 3.10 Plant Liquid Effluent Parameters ..... Page 68

Attachment 3.11 Volumetric Detection Efficiencies for Principle Gamma Emitting Radionuclides for Eberline Liquid Monitors ..... Page 69

Attachment 3.12 Counting Efficiency Curves for R-19, and R-24 ..... Pages 70 - 71

Attachment 3.13 Counting Efficiency Curve for R-20, and R-28 ..... Page 72

Attachment 3.14 Gaseous Effluent Release Systems ..... Page 73

Attachment 3.15 Plant Gaseous Effluent Parameters ..... Page 74

Attachment 3.16 10 Year Average of 1995-2004 Data ..... Pages 75 - 76

Attachment 3.17 Annual Evaluation of $\overline{\chi/Q}$ and $\overline{D/Q}$ Values For All Sectors ..... Page 77

Attachment 3.18 Dose Factors ..... Pages 78 - 79

Attachment 3.19 Radiological Environmental Monitoring Program Sample Stations, Sample Types, Sample Frequencies ..... Pages 80 - 83

Attachment 3.20 Maximum Values for Lower Limits of Detections[A,B] - REMP ..... Pages 84 - 85

Attachment 3.21 Reporting Levels for Radioactivity Concentrations in Environmental Samples ..... Page 86

Attachment 3.22 On-Site Monitoring Location - REMP ..... Page 87

Attachment 3.23 Off-Site Monitoring Locations - REMP ..... Page 88

1 PURPOSE AND SCOPE

NOTE:	This is an Administrative procedure and only the appropriate sections need be performed per PMP-2010-PRC-003, step 3.2.7.

- The Off-Site Dose Calculation Manual (ODCM) is the top tier document for the Radiological Environmental Monitoring Program (REMP), the Radioactive Effluent Controls Program (RECP), contains criteria pertaining to the previous Radiological Effluent Technical Specifications (RETS) as defined in NUREG-0472, and fully implements the requirements of Technical Specification 5.5.3, Radioactive Effluent Controls Program.

- The ODCM contains the methodology and parameters to be used in the calculation of off-site doses due to radioactive liquid and gaseous effluents and in the calculation of liquid and gaseous monitoring instrumentation alarm/trip setpoints.

- The ODCM provides flow diagrams detailing the treatment path and the major components of the radioactive liquid and gaseous waste management systems.

- The ODCM presents maps of the sample locations and the meteorological model used to estimate the atmospheric dispersion and deposition parameters.

- The ODCM specifically addresses the design characteristics of the Donald C. Cook Nuclear Plant based on the flow diagrams contained on the "OP Drawings" and plant "System Description" documents.

2 DEFINITIONS AND ABBREVIATIONS

Term:	Meaning:
S or shiftly	At least once per 12 hours
D or daily	At least once per 24 hours
W or weekly	At least once per 7 days
M or monthly	At least once per 31 days
Q or quarterly	At least once per 92 days
SA or semi-annually	At least once per 184 days
R	At least once per 549 days.
S/U	Prior to each reactor startup
P	Completed prior to each release
B	At least once per 24 months
Sampling evolution	Process of changing filters or obtaining grab samples

Member(s) of Public	All persons who are not occupationally associated with the plant. Does not include employees of the utility, its contractors or its vendors. Also excluded from this category are persons who enter the site to service equipment or to make deliveries. This category does include persons who use portions of the site for recreational, occupational or other purposes not associated with the plant.
Purge/purging	The controlled process of discharging air or gas from a confinement to maintain temperature, pressure, humidity, concentration or other operating condition, in such a manner that replacement air or gas is required to purify the confinement.
Source check	The qualitative assessment of Channel response when the Channel sensor is exposed to a radioactive source.
Total Fractional Level (TFL)	Total Fractional Level is defined as: $$TFL = \frac{C_{(1)}}{L_{(1)}} + \frac{C_{(2)}}{L_{(2)}} + \ldots \geq 1$$ Where; $C_{(1)}$ = Concentration of 1st detected nuclide $C_{(2)}$ = Concentration of 2nd detected nuclide $L_{(1)}$ = Reporting Level of 1st nuclide from Attachment 3.21, Reporting Levels for Radioactivity Concentrations in Environmental Samples. $L_{(2)}$ = Reporting Level of 2nd nuclide from Attachment 3.21, Reporting Levels for Radioactivity Concentrations in Environmental Samples.
Venting	Controlled process of discharging air or gas from a confinement to maintain temperature, pressure, humidity, concentration or other operating condition, in such a manner that replacement air or gas is not provided or required. Vent, used in system names, does not imply a venting process.

3 DETAILS

3.1 Calculation of Off-Site Doses

3.1.1 Gaseous Effluent Releases

a. The computer program MIDAS (Meteorological Information and Dose Assessment System) performs the calculation of doses from effluent releases. The site-specific parameters associated with MIDAS reside in the following subprograms:

- MIDER
- MIDEX
- MIDEL
- MIDEG
- MIDEN

b. The subprogram used to enter and edit gaseous release data is called MD1EQ (EQ). The data entered in EQ can be used to calculate the accumulation of dose to individual land based receptors based on hourly meteorology and release data. The air dose from this data is calculated via the XDAIR subprogram in MIDAS. It computes air dose results for use in Reg. Guide 1.21 reports and 10 CFR 50 Appendix I calculations based on routine releases.

c. The formula used for the calculation of the air dose is generated from site specific parameters and Reg. Guide 1.109 (Eq 7):

$$D_\gamma, D_\beta\, air = \frac{\overline{\chi}}{Q} * \Sigma[(M_i \text{ or } N_i) * Q_i * 3.17E-8]$$

Where;

D_γ , D_β air = the gamma or beta air dose in mrad/yr to an individual receptor

$\overline{\chi / Q}$ = the annual average or real time atmospheric dispersion factor over land, sec/m^3 from Attachment 3.16, 10 Year Average of 1995-2004 Data

M_i = the gamma air dose factor, mrad m^3 / yr μCi, from Attachment 3.18, Dose Factors

N_i = the beta air dose factor, mrad m^3 / yr μCi, from Attachment 3.18, Dose Factors

Q_i = the release rate of radionuclide, "i", in μCi/yr. Quantities are determined utilizing typical concentration times volumes equations that are documented in 12-THP-6010-RPP-601, Preparation of the Annual Radioactive Effluent Release Report.

3.17E-8 = number of years in a second (years/second).

d. The value for the ground average $\overline{\chi / Q}$ for each sector is calculated using equations shown below. Formula used for the calculation is generated from parameters contained in MIDAS Technical Manual, XDCALC (Eq 2).

$$\overline{\chi/Q} = \frac{2.03}{\bar{u}_{m_g} * x * \Sigma_g} * T_f$$

Where;

$$\Sigma_g = \textit{minimum of} \sqrt{\sigma_{z_g}^2 + \frac{H_c^2}{2\pi}} \quad or \quad \Sigma_g = \sqrt{3}\,\sigma_{z_g}$$

x = distance downwind of the source, meters. This information is found in parameter 5 of MIDEX.

$\bar{u}_{m_g}$ = wind speed for ground release, (meters/second)

σ_{z_g} = vertical dispersion coefficient for ground release, (meters), (Reg. Guide 1.111 Fig.1)

H_c = building height (meters) from parameter 28 of MIDER. (Containment Building = 49.4 meters)

T_f = terrain factor (= 1 for Cook Nuclear Plant) because we consider all our releases to be ground level (see parameter 5 in MIDEX).

2.03 = $\sqrt{2 \div \pi} \div 0.393\, radians\ (22.5°)$

e. The dose due to gaseous releases, other than the air dose, is calculated by the MIDAS subprogram GASPRO. GASPRO computes the accumulation of dose to individual receptors based on hourly meteorology and release data. Calculations consider the effect of each important radionuclide for each pathway, organ, age group, distance and direction.

f. Calculations are based on the environmental pathways-to-man models in Reg. Guide 1.109. The program considers 7 pathways, 8 organs, and 4 age groups in 16 direction sectors. The distances used are taken from the MIDEG file.

g. The formulas used for the following calculations are generated from site specific parameters and Reg. Guide 1.109:

1. Total Body Plume Pathway (Eq 10)

$$Dose\ (mrem/year) = 3.17E-8 * \Sigma (Q_i * \overline{\chi/Q} * S_f * DFB_i)$$

Where;

S_f = shielding factor that accounts for the dose reduction due to shielding provided by residential structures during occupancy (maximum exposed individual = 0.7 per Table E-15 of Reg. Guide 1.109)

DFB_i = the whole body dose factor from Table B-1 of Reg. Guide 1.109, mrem - m^3 per μCi - yr. See Attachment 3.18, Dose Factors.

Q_i = the release rate of radionuclide "i", in μCi/yr

2. Skin Plume Pathway (Eq 11)

$$Dose\ (mrem/yr) = 3.17E-8 * S_f * \frac{\overline{\chi}}{Q} * [\Sigma(Q_i * 1.11 * DF_i^{\gamma}) + \Sigma(Q_i * DFS_i)]$$

Where;

1.11 = conversion factor, tissue to air, mrem/mrad

DF_i^{γ} = the gamma air dose factor for a uniform semi-infinite cloud of radionuclide "i", in mrad m^3/μCi yr from Table B-1, Reg. Guide 1.109. See Attachment 3.18, Dose Factors.

DFS_i = the beta skin dose factor for a semi-infinite cloud of radionuclide "i", in mrem m^3/μCi yr from Table B-1, Reg. Guide 1.109. See Attachment 3.18, Dose Factors.

3. Radionuclide and Radioactive Particulate Doses (Eq 13 & 14)

The dose, D_{IP} in mrem/yr, to an individual from radionuclides, other than noble gases, with half-lives greater than eight days in gaseous effluents released to unrestricted areas will be determined as follows:

$$D_{IP}\,(mrem/year) = 3.17E-8 * \Sigma(R_i * W * Q_{ic})$$

Where;

R_i = the most restrictive dose factor for each identified radionuclide "i", in m^2 mrem sec / yr μCi (for food and ground pathways) or mrem m^3 / yr μCi (for inhalation pathway), for the appropriate pathway

For sectors with existing pathways within five miles of the site, use the values of R_i for these real pathways, otherwise use pathways distance of five miles. See Attachment 3.1, Dose Factors for Various Pathways, for the maximum R_i values for the most controlling age group for selected radionuclides. R_i values were generated by computer code PARTS, see NUREG-0133, Appendix D.

W = the annual average or real time atmospheric dispersion parameters for estimating doses to an individual at the worst case location, and where W is further defined as:

W_{in} = $\overline{\chi/Q}$ for the inhalation pathway, in sec/m^3

-OR-

W_{fg} = $\overline{D/Q}$ for the food and ground pathways in 1/m^2

Q_{ic} = the release rate of those radioiodines, radioactive materials in particulate form and radionuclides other than noble gases with half-lives greater than eight days, in μCi/yr

h. This calculation is made for each pathway. The maximum computed dose at any receptor for each pathway is selected. These are summed together to get the dose to compare to the limits. Only the maximum of the cow milk or goat milk pathway (not both) is included in the total.

i. In addition to the above routines, the QUICKG routine of the MIDAS system is used to provide data used in the monthly reports due to its ability to use annual average meteorological data rather than real time data, thus shortening the run time involved.

j. Steam Generator Blowdown System (Start Up Flash Tank Vent)

1. The amount of radioiodine and other radionuclides that are released via the start up flash tank and its vent are calculated through actual sample results while the start up flash tank is in service.

2. The following calculation is performed to determine the amount of curies released through this pathway. (Plant established formula.)

$$Curies = \frac{\mu Ci}{ml} * GPM * time\ on\ flash\ tank\ (\min) * 3.785E-3$$

Where; 3.785E-3 = conversion factor, ml Ci/μCi gal.

3. The flow rate is determined from the blowdown valve position and the time on the start up tank. Chemistry Department performs the sampling and analysis of the samples.

4. This data is provided to the MIDAS computer and dose calculations (liquid and gas) are performed to ensure compliance with Subsection 3.2, Limits of Operation and Surveillances of the Effluent Release Points, dose limits. MIDAS uses the formulas given in step 3.1.2, Liquid Effluent Releases, to calculate doses to members of the public.

NOTE:	This section provides the minimum requirements to be followed at Donald C. Cook Nuclear Plant. This would be used if actual sample data was not available each time the start up flash tank was in service.

5. The radioiodine release rate must be determined in accordance with the following equation every 31 day period whenever the specific activity of the secondary coolant system is greater than 0.01 μCi/g dose equivalent I-131.

6. **IF** the specific activity of the secondary coolant system is less than 0.01 μCi/g dose equivalent I-131, **THEN** the release rate must be determined once every six months. Use the following plant established equation:

$$Q_y = Ci * \quad IPF * \quad R_{sgb}$$

Where;

Q_y = the release rate of I-131 from the steam generator flash tank vent, in μCi/sec

Ci = the concentration (μCi/cc) of I-131 in the secondary coolant averaged over a period not exceeding seven days

IPF = the iodine partition factor for the Start Up Flash Tank, 0.05, in accordance with NUREG-0017

Rsgb = the steam generator blowdown rate to the start up flash tank, in cc/sec

7. Use the calculated release rate in monthly dose projections until the next determination to ensure compliance with Subsection 3.2, Limits of Operation and Surveillances of the Effluent Release Points, dose limits. Report the release rate calculations in the Annual Radioactive Effluent Release Report.

3.1.2 Liquid Effluent Releases

a. The calculation of doses from liquid effluent releases is also performed by the MIDAS program. The subprogram used to enter and edit liquid release data is called MD1EB (EB).

b. To calculate the individual dose (mrem), the program DS1LI (LD) is used. It computes the individual dose for up to 5 receptors for 14 liquid pathways due to release of radioactive liquid effluents. The pathways can be selected using the MIDEL program and changing the values in parameter 1. D.C. Cook Nuclear Plant uses 3 pathways: potable water, shoreline, and aquatic foods (fresh water sport fishing).

c. Steam Generators are sparged, sampled, and drained as batches usually early in outages to facilitate cooldown for entry into the steam generator. This is typically repeated prior to startup to improve steam generator chemistry for the startup. The sample stream, if being routed to the operating unit blowdown, is classified as a continuous release for quantification purposes to maintain uniformity with this defined pathway.

d. The equations used are generated from site specific data and Reg. Guide 1.109. They are as follows:

1. Potable Water (Eq 1)

$$R_{apj} = 1100 * \frac{U_{ap}}{M_P * F * 2.23E-3} * \sum_i Q_i * D_{aipj} e^{-\lambda_i t_p}$$

Where;

R_{apj} = the total annual dose to organ "j" to individuals of age groups "a" from all of the nuclides "i" in pathway "p", in mrem/year

1100 = conversion factor, yr ft^3 ρCi / Ci sec L

U_{ap} = a usage factor that specifies the exposure time or intake rate for an individual of age group "a" associated with pathway "p". Given in #29-84 of parameter 4 in MIDEL and Reg. Guide 1.109 Table E-5. See Attachment 3.1, Dose Factors for Various Pathways.

M_P = the dilution factor at the point of exposure (or the point of withdrawal of drinking water or point of harvest of aquatic food). Given in parameter 5 of MIDEL as 2.6.

F = the circulation water system water flow rate, in gpm, is used for evaluating dose via these pathways as dilution flow

2.23E-3 = conversion factor, ft^3 min / sec gal

Q_i = the release rate of nuclide "i" for the time period of the run input via MIDEB, Curies/year

D_{aipj} = the dose factor, specific to a given age group "a", radionuclide "i", pathway "p", and organ "j", which can be used to calculate the radiation dose from an intake of a radionuclide, in mrem/ρCi. These values are taken from tables E-11 through E-14 of Reg. Guide 1.109 and are located within the MIDAS code.

λ_i = the radioactive decay constant for radionuclide "i", in $hours^{-1}$

t_p = the average transit time required for nuclides to reach the point of exposure, 12 hours. This allows for nuclide transport through the water purification plant and the water distribution system. For internal dose, t_p is the total elapsed time between release of the nuclides and ingestion of food or water, in hours. Given as #25 of parameter 4 in MIDEL. (t_p = 12 hours)

2. Aquatic Foods (Eq 2)

$$R_{apj} = 1100 * \frac{U_{ap}}{M_P * F * 2.23E-3} * \sum_i Q_i * B_{ip} * D_{aipj} e^{-\lambda_i t_p}$$

Where,

B_{ip} = the equilibrium bioaccumulation factor for nuclide "i" in pathway "p", expressed as ρCi L / kg ρCi. The factors are located within the MIDAS code and are taken from Table A-1 of Reg. Guide 1.109. See Attachment 3.1, Dose Factors for Various Pathways.

t_p = the average transit time required for nuclides to reach the point of exposure, 24 hours. This allows for decay during transit through the food chain, as well as during food preparation. Given as #26 of parameter 4 in MIDEL. (t_p = 24 hours)

M_p = the dilution factor at the point of exposure, 1.0 for Aquatic Foods. Given in parameter 5 of MIDEL as 1.0.

3. Shoreline Deposits (Eq 3)

$$R_{apj} = 110{,}000 * \frac{U_{ap} * W}{M_p * F * 2.23E-3} * \sum_i Q_i * T_i * D_{aipj} \left[e^{-\lambda_i t_p}\right] * \left[1 - e^{-\lambda_i t_b}\right]$$

Where;

W = the shoreline width factor. Given as an input of 0.3 when running the program, based on Table A-2 in Reg. Guide 1.109.

T_i = the radioactive half-life of the nuclide, "i", in days

D_{aipj} = the dose factor for standing on contaminated ground, in mrem m^2 / hr ρCi. The values are taken from table E-6 of Reg. Guide 1.109 and are located within the MIDAS code. See Attachment 3.1, Dose Factors for Various Pathways.

t_b = the period of time for which sediment or soil is exposed to the contaminated water, 1.31E+5 hours. Given in MIDEL as item 6 of parameter 4.

t_p = the average transit time required for nuclides to reach the point of exposure, 0 hours. Given as #28 of parameter 4 in MIDEL.

110,000 = conversion factor yr ft^3 ρCi / Ci sec m^2 day, this accounts for proportionality constant in the sediment radioactivity model

M_p = the dilution factor at the point of exposure (or the point of withdrawal of drinking water or point of harvest of aquatic food). Given in parameter 5 of MIDEL as 2.6.

e. The MIDAS program uses the following plant specific parameters, which are entered by the operator.

1. Irrigation rate = 0
2. Fraction of time on pasture = 0
3. Fraction of feed on pasture = 0
4. Shore width factor = 0.3 (from Reg. Guide 1.109, Table A-2)

f. The results of DS1LI are printed in LDRPT (LP). These results are used in the monthly report of liquid releases.

g. In addition, the program DOSUM (DM) is used to search the results files of DS1LI to find the maximum liquid pathway individual doses. The highest exposures are then printed in a summary table. Each line is compared with the appropriate dose limit. The table provides a concise summary of off-site environmental dose calculations for inclusion in Annual Radioactive Effluent Release Reports, required by Reg. Guide 1.21.

NOTE:	The performance of each surveillance requirement must be within the specified time interval with a maximum allowable extension not to exceed 25% of the specified surveillance interval.

3.2 Limits of Operation and Surveillances of the Effluent Release Points

3.2.1 Radioactive Liquid Effluent Monitoring Instrumentation

a. The radioactive liquid effluent monitoring instrumentation channels shown in Attachment 3.2, Radioactive Liquid Effluent Monitoring Instruments, are operable with their alarm/trip setpoints set to ensure that the limits of step 3.2.3a, Concentration Excluding Releases via the Turbine Room Sump (TRS) Discharge, are not exceeded.

b. The applicability of each channel is shown in Attachment 3.2, Radioactive Liquid Effluent Monitoring Instruments.

c. With a radioactive liquid effluent monitoring instrumentation channel alarm/trip setpoint less conservative than a value which will ensure the limits of step 3.2.3a, Concentration Excluding Releases via the Turbine Room Sump (TRS) Discharge, are met without delay, suspend the release of radioactive liquid effluents monitored by the affected channel and reset or declare the monitor inoperable.

d. With one or more radioactive liquid effluent monitoring instrumentation channels inoperable, take the applicable action shown in Attachment 3.2, Radioactive Liquid Effluent Monitoring Instruments, with a maximum allowable extension not to exceed 25% of the surveillance interval, excluding the initial performance.

e. Determine the setpoints in accordance with the methodology described in step 3.3.1, Liquid Monitors. Record the setpoints.

f. Demonstrate each radioactive liquid effluent monitoring instrumentation channel is operable by performing the CHANNEL CHECK, SOURCE CHECK, CHANNEL CALIBRATION and CHANNEL OPERATIONAL TEST at the frequencies shown in Attachment 3.3, Radioactive Liquid Effluent Monitoring Instrumentation Surveillance Requirements.

BASES - LIQUID

The radioactive liquid effluent instrumentation is provided to monitor and control, as applicable, the releases of radioactive materials in liquid effluents during actual or potential releases. The alarm/trip setpoints for these instruments shall be calculated in accordance with NRC approved methods in the ODCM to ensure the alarm/trip will occur prior to exceeding the limits of 10 CFR Part 20. The OPERABILITY and use of this instrumentation is consistent with the requirements of General Design Criteria specified in Section 11.3 of the Final Safety Analysis Report for the Donald C. Cook Nuclear Plant. Due to the location of the Westinghouse ESW monitors, outlet line of containment spray heat exchanger (typically out of service), weekly sampling is required of the ESW system for radioactivity. This is necessary to ensure monitoring of a CCW to ESW system leak. [Ref 5.2.1gg]

3.2.2 Radioactive Gaseous Effluent Monitoring Instrumentation

a. The radioactive gaseous process and effluent monitoring instrumentation channels shown in Attachment 3.4, Radioactive Gaseous Effluent Monitoring Instrumentation, are operable with their alarm/trip setpoints set to ensure that the limits of step 3.2.4a, Dose Rate, are not exceeded.

b. The applicability of each channel is shown in Attachment 3.4, Radioactive Gaseous Effluent Monitoring Instrumentation.

c. With a radioactive gaseous process or effluent monitoring instrumentation channel alarm/trip setpoint less conservative than a value which will ensure that the limits of step 3.2.4a, Dose Rate, are met, without delay, suspend the release of radioactive gaseous effluents monitored by the affected channel and reset or declare the channel inoperable.

d. With less than the minimum number of radioactive gaseous effluent monitoring instrumentation channels operable, take the action shown in Attachment 3.4, Radioactive Gaseous Effluent Monitoring Instrumentation, with a maximum allowable extension not to exceed 25% of the surveillance interval, excluding the initial performance.

NOTE:	This surveillance requirement does not apply to the waste gas holdup system hydrogen and oxygen monitors, as their setpoints are not addressed in this document.

e. Determine the setpoints in accordance with the methodology as described in step 3.3.2, Gaseous Monitors. Record the setpoints.

f. Demonstrate each radioactive gaseous process or effluent monitoring instrumentation channel is operable by performing the CHANNEL CHECK, SOURCE CHECK, CHANNEL CALIBRATION, and CHANNEL OPERATIONAL TEST operations at the frequencies shown in Attachment 3.5, Radioactive Gaseous Effluent Monitoring Instrumentation Surveillance Requirements.

BASES - GASEOUS

The radioactive gaseous effluent instrumentation is provided to monitor and control, as applicable, the releases of radioactive materials in gaseous effluents during actual or potential releases. The alarm/trip setpoints for these instruments shall be calculated in accordance with NRC approved methods in the ODCM to ensure the alarm/trip will occur prior to exceeding the limits of 10 CFR Part 20. The OPERABILITY and use of this instrumentation is consistent with the requirements of General Design Criteria specified in Section 11.3 of the Final Safety Analysis Report for the Donald C. Cook Nuclear Plant.

3.2.3 Liquid Effluents

a. Concentration Excluding Releases via the Turbine Room Sump (TRS) Discharge

1. Limit the concentration of radioactive material released via the Batch Release Tanks or Plant Continuous Releases (excluding only TRS discharge to the Absorption Pond) to unrestricted areas to the concentrations in 10 CFR 20, Appendix B, Table 2, Column 2, for radionuclides other than dissolved or entrained noble gases. For dissolved or entrained noble gases, limit the concentration to 2E-4 μCi/ml total activity.

2. With the concentration of radioactive material released from the site via the Batch Release Tanks or Plant Continuous Releases (other than the TRS to the Absorption Pond) exceeding the above limits, without delay restore the concentration to within the above limits.

3. Sample and analyze radioactive liquid wastes according to the sampling and analysis program of Attachment 3.6, Radioactive Liquid Waste Sampling and Analysis Program.

4. Use the results of radioactive analysis in accordance with the methods of this document to assure that all concentrations at the point of release are maintained within limits.

b. Concentration of Releases from the TRS Discharge

1. Limit releases via the TRS discharge to the on-site Absorption Pond to the concentrations specified in 10 CFR 20, Appendix B, Table 2, Column 2. For dissolved or entrained noble gases, limit the concentration to 2E-4 μCi/ml total activity.

2. With releases from the TRS exceeding the above limits, perform a dose projection due to liquid releases to UNRESTRICTED AREAS to determine if the limits of step 3.2.3c.1 have been exceeded. If the dose limits have been exceeded, follow the directions in step 3.2.3c.2, as applicable.

3. Sample and analyze radioactive liquid wastes according to the program in Attachment 3.6, Radioactive Liquid Waste Sampling and Analysis Program.

4. Use the results of radioactive analysis in accordance with the methods of this document to assure that all concentrations at the point of release are maintained within the limits stated above.

c. Dose

1. Limit the dose or dose commitment to an individual from radioactive material in liquid effluents released to unrestricted areas during any calendar quarter to ≤ 1.5 mrem/unit to the total body and to ≤ 5 mrem/unit to any organ, and during any calendar year to ≤ 3 mrem/unit to the total body and to ≤ 10 mrem/unit to any organ.

2. With the calculated release of radioactive materials in liquid effluents exceeding ten times any of the limits in Steps 3.2.3a or 3.2.3b, or exceeding 3.2.3c.1 above, prepare and submit a Written Report, pursuant to 10 CFR 20.2203, within 30 days after learning of the event. This report must describe the extent of exposure of individuals to radiation and radioactive material, including, as appropriate:

   a) Estimate of each individual's dose. This is to include the radiological impacts on finished drinking water supplies with regard to the requirements of 40 CFR 141, Safe Drinking Water Act (applicable due to Lake Township water treatment facility),
   b) Levels of radiation and concentration of radioactive material involved,
   c) Cause of elevated exposures, dose rates or concentrations,
   -AND-
   d) Corrective steps taken or planned to ensure against recurrence, including schedule for achieving conformance with applicable limits.

   These reports must be formatted in accordance with PMP-7030-001-002, Licensee Event Reports, Special and Routine Reports, even though this is not an LER.

3. Determine cumulative and projected dose contributions from liquid effluents in accordance with this document at least once per 31 days. Dose may be projected based on estimates from previous monthly projections and current or future plant conditions.

d. Liquid Radwaste Treatment System

1. Use the liquid radwaste treatment system to reduce the radioactive materials in liquid wastes prior to their discharge when the projected doses due to the liquid effluent from the site when averaged over 31 days, would exceed 0.12 mrem (0.06 mrem/unit x 2 units) to the total body or 0.4 mrem (0.2 mrem/unit x 2 units) to any organ.

2. Project doses due to liquid releases to UNRESTRICTED AREAS at least once per 31 days, in accordance with this document.

e. During times of primary to secondary leakage, the use of the startup flash tank should be minimized to reduce the release of curies from the secondary system and to maintain the dose to the public ALARA.

Drainage of high conductivity water (Component Cooling Water and ice melt water containing sodium tetraborate) shall be evaluated to decide whether it should be drained to waste (small volumes only), the Turbine Room Sump (low activity water only) or routed without demineralization processing to a monitor tank for release. This is necessary in order to minimize the detrimental affect that high conductivity water has on the radioactive wastewater demineralization system. The standard concentration and volume equation can be utilized to determine the impact on each method and is given here. The units for concentration and volume need to be consistent across the equation:

$$(C_i)(V_i)+(C_a)(V_a)=(C_t)(V_t)$$

Where;

C_i = the initial concentration of the system being added to
V_i = the initial volume of the system being added to
C_a = the concentration of the water that is being added to the system
V_a = the volume of the water that is being added to the system
C_t = the final concentration of the system after the addition
V_t = the final volume of the system after the addition

The intent is to keep the:

- WDS below 500 μmhos/cc.
- TRS below 1E-5 μC/cc.
- Monitor Tank release ALARA to members of the public.

Wastewater leakage into the liquid waste disposal system will be monitored routinely. In the event the leak rate is determined to be over two gallons per minute (the assumed plant design leakage based on the original 2 gpm waste evaporator), increased scrutiny will be placed on locating in-leakage, timeliness of job order activities, and/or activities causing increased production of waste water.

BASES - CONCENTRATION

This specification is provided to ensure the concentration of radioactive materials released in liquid waste effluents from the site to unrestricted areas will be less than the concentration levels specified in 10 CFR Part 20, Appendix B, Table 2. This limitation provides additional assurance that the levels of radioactive materials in bodies of water outside the site will not result in exposures greater than 1) the Section II.A design objectives of Appendix I, 10 CFR Part 50, to an individual and 2) the limits of 10 CFR Part 20. The concentration limit for noble gasses is based upon the assumption that Xe-135 is the controlling radionuclide and its Effluent Concentration Unit in air (submersion) was converted to an equivalent concentration in water using the methods described in the International Commission on Radiological Protection (ICRP) Publication 2.

DOSE

This specification is provided to implement the requirements of Sections II.A, III.A, and IV.A of Appendix I, 10 CFR Part 50. The dose limits implement the guides set forth in Section II.A of Appendix I. The ACTION statements provide the required operating flexibility and at the same time, implement the guides set forth in Section IV.A of Appendix I to assure the releases of radioactive material in liquid effluents will be kept "as low as is reasonably achievable". Also, for fresh water sites with drinking water supplies which can be potentially affected by plant operations, there is reasonable assurance that the operation of the facility will not result in radionuclide concentrations in the finished drinking water that are in excess of the requirements of 40 CFR 141. The dose calculations in the ODCM implement the requirements in Section III.A of Appendix I that conformance with the guides of Appendix I be shown by calculational procedures based on models and data such that the actual exposure of an individual through appropriate pathways is unlikely to be substantially underestimated. The equations specified in the ODCM for calculating the doses due to the actual release rates of radioactive materials in liquid effluents, will be consistent with the methodology provided in Regulatory Guide 1.109, "Calculation of Annual Doses to Man from Routine Releases of Reactor Effluents for the Purpose of Evaluating Compliance with 10 CFR Part 50, Appendix I", Revision 1, October 1977, and Regulatory Guide 1.113, "Estimating Aquatic Dispersion of Effluents from Accidental and Routine Reactor Releases for the Purpose of Implementing Appendix I", April 1977. NUREG-0133 provides methods for dose calculations consistent with Regulatory Guide 1.109 and 1.113.

This specification applies to the release of liquid effluents from each reactor at the site. The liquid effluents from the shared system are proportioned among the units sharing the system.

LIQUID WASTE TREATMENT

The operability of the liquid radwaste treatment system ensures that this system will be available for use whenever liquid effluents require treatment prior to release to the environment. The requirements that the appropriate portions of this system be used when specified provide assurance that the releases of radioactive materials in liquid effluents will be kept "as low as is reasonably achievable". This specification implements the requirements of 10 CFR Part 50.36a, General Design Criteria Section 11.1 of the Final Safety Analysis Report for the Donald C. Cook Nuclear Plant, and design objective Section II.D of Appendix I to 10 CFR Part 50. The specified limits governing the use of appropriate portions of the liquid radwaste treatment system were specified as a suitable fraction of the dose design objectives set forth in Section II.A of Appendix I, 10 CFR Part 50, for liquid effluents.

3.2.4 Gaseous Effluents

a. Dose Rate

1. Limit the dose rate due to radioactive materials released in gaseous effluents from the site to ≤ 500 mrem/yr to the total body and ≤ 3000 mrem/yr to the skin for noble gases. Limit the dose rate due to all radioiodines and for all radioactive materials in particulate form and radionuclides (other than noble gases) with half-lives greater than eight days to ≤ 1500 mrem/yr to any organ.

2. With the dose rate(s) exceeding the above limits, without delay decrease the release rate to within the above limit(s).

3. Determine the dose rate due to noble gases in gaseous effluents to be within the above limits in accordance with the methods and procedures described in this document.

4. Determine the dose rate due to radioactive materials, other than noble gases, in gaseous effluents to be within the above limits in accordance with the methods and procedures of this document by obtaining representative samples and performing analyses in accordance with the sampling and analysis program in Attachment 3.7, Radioactive Gaseous Waste Sampling and Analysis Program.

b. Dose - Noble Gases

1. Limit the air dose in unrestricted areas due to noble gases released in gaseous effluents during any calendar quarter, to ≤ 5 mrad/unit for gamma radiation and ≤ 10 mrad/unit for beta radiation and during any calendar year, to ≤ 10 mrad/unit for gamma radiation and ≤ 20 mrad/unit for beta radiation.

2. With the calculated air dose from radioactive noble gases in gaseous effluents exceeding any of the above limits, prepare and submit a Written Report, pursuant to 10 CFR 20.2203 and addressed in step 3.2.3c.2, within 30 days after learning of the event.

3. Determine cumulative and projected dose contributions for the total time period in accordance with this document at least once every 31 days.

c. Dose - Iodine-131, Iodine-133, Tritium, and Radioactive Material in Particulate Form

1. Limit the dose to a MEMBER OF THE PUBLIC from radioiodine, radioactive materials in particulate form, and radionuclides other than noble gases with half-lives greater than eight days in gaseous effluents released to unrestricted areas (site boundary) to the following:

a) During any calendar quarter to less than or equal to 7.5 mrem/unit to any organ

b) During any calendar year to less than or equal to 15 mrem/unit to any organ.

2. With the calculated dose from the release of radioiodines, radioactive materials in particulate form, or radionuclides other than noble gases in gaseous effluents exceeding any of the above limits, prepare and submit a Written Report, pursuant to 10 CFR 20.2203 and addressed in step 3.2.3c.2, within 30 days after learning of the event.

3. Determine cumulative and projected dose contributions for the total time period in accordance with this document at least once every 31 days.

d. Gaseous Radwaste Treatment

1. The UFSAR (Updated Final Safety Analysis Report) states that radioactive waste gas should be held for 45 days of decay time.

2. Use the gaseous radwaste treatment system and the ventilation exhaust treatment system to reduce radioactive materials in gaseous wastes prior to their discharge when projected gaseous effluent air doses due to gaseous effluent releases to unrestricted areas when averaged over 31 days, would exceed 0.4 mrad (0.2 mrad/unit x 2 units) for gamma radiation and 0.8 mrad (0.4 mrad/unit x 2 units) for beta radiation. Use the ventilation exhaust treatment system to reduce radioactive materials in gaseous waste prior to their discharge when the projected doses due to gaseous effluent releases to unrestricted areas when averaged over 31 days would exceed 0.3 mrem/unit to any organ.

3. Project doses due to gaseous releases to UNRESTRICTED AREAS at least once per 31 days in accordance with this document.

BASES -- GASEOUS EFFLUENTS

This specification provides reasonable assurance that radioactive material discharged in gaseous effluents will not result in the exposure of a Member of the Public in an unrestricted area, either at or beyond the site boundary in excess of the design objectives of appendix I to 10 CFR 50. This specification is provided to ensure that gaseous effluents from all units on the site will be appropriately controlled. It provides operational flexibility for releasing gaseous effluents to satisfy the Section II.A and II.C design objectives of appendix I to 10 CFR 50. For individuals who may at times be within the site boundary, the occupancy of the individual will be sufficiently low to compensate for any increase in the atmospheric diffusion factor above that for the site boundary. The specified instantaneous release rate limits restrict, at all times, the corresponding gamma and beta dose rates above background to an individual at or beyond the site boundary to ≤ 500 mrem/yr to the total body or to ≤ 3000 mrem/yr to the skin. These instantaneous release rate limits also restrict, at all times, the corresponding thyroid dose rate above background to a child via the inhalation pathway to ≤ 1500 mrem/yr. Limitations on the dose rate resulting from radioactive material released in gaseous effluents to areas beyond the site boundary conforming to the doses associated with 10 CFR 20, Appendix B, Table 2, Column 1.

This specification applies to the release of gaseous effluents from all reactors at the site. The gaseous effluents from the shared system are proportioned among the units sharing that system.

DOSE, NOBLE GASES

This specification is provided to implement the requirements of Sections II.B, III.A, and IV.A of Appendix I, 10 CFR Part 50. The dose limits implement the guides set forth in Section II.B of Appendix I.

The ACTION statements provide the required operating flexibility and at the same time implement the guides set forth in section IV.A of Appendix I to assure that the releases of radioactive material in gaseous effluents will be kept "as low as is reasonably achievable". The Surveillance Requirements implement the requirements in Section III.A of Appendix I that conform with the guides of Appendix I to be shown by calculational procedures based on models and data such that the actual exposure of an individual through the appropriate pathways is unlikely to be substantially underestimated. The dose calculations established in the ODCM for calculating the doses due to the actual release rates of radioactive noble gases in gaseous effluents will be consistent with the methodology provided in Regulatory Guide 1.109, "Calculation of Annual Doses to Man from Routine Releases of Reactor Effluents for the Purpose of Evaluating Compliance with 10 CFR Part 50, Appendix I", Revision 1, October 1977 and Regulatory Guide 1.111, "Methods for Estimating Atmospheric Transport and Dispersion of Gaseous Effluents in Routine Releases from Light-Water-Cooled Reactors", Revision 1, July 1977. The ODCM equations provided for determining the air doses at the site boundary will be based upon the historical average atmospherical conditions. NUREG-0133 provides methods for dose calculations consistent with Regulatory Guides 1.109 and 1.111.

DOSE, RADIOIODINES, RADIOACTIVE MATERIAL IN PARTICULATE FORM, AND RADIONUCLIDES OTHER THAN NOBLE GASES

This specification is provided to implement the requirements of Sections II.C, III.A, and IV.A of Appendix I, 10 CFR Part 50. The dose limits are the guides set forth in Section II.C of Appendix I.

The ACTION statements provide the required operating flexibility and at the same time implement the guides set forth in section IV.A of Appendix I to assure that the releases of radioactive material in gaseous effluents will be kept "as low as is reasonably achievable". The ODCM calculational methods specified in the surveillance requirements implement the requirements in Section III.A of Appendix I that conform with the guides of Appendix I to be shown by calculational procedures based on models and data such that the actual exposure of an individual through the appropriate pathways is unlikely to be substantially underestimated. The ODCM calculational methods approved by the NRC for calculating the doses due to the actual release rates of the subject materials are required to be consistent with the methodology provided in Regulatory Guide 1.109, "Calculation of Annual Doses to Man from Routine Releases of Reactor Effluents for the Purpose of Evaluating Compliance with 10 CFR Part 50, Appendix I", Revision 1, October 1977 and Regulatory Guide 1.111, "Methods for Estimating Atmospheric Transport and Dispersion of Gaseous Effluents in Routine Releases from Light-Water-Cooled Reactors", Revision 1, July 1977. These equations also provide the methodology for determining the actual doses based upon the historical average atmospheric conditions. The release rate specifications for radioiodines, radioactive material in particulate form, and radionuclides, other than noble gases, are dependent on the existing radionuclide pathways to man, in the unrestricted area. The pathways which are examined in the development of these calculations are: 1) individual inhalation of airborne radionuclides, 2) deposition of radionuclides onto green leafy vegetation with subsequent consumption by man, 3) deposition onto grassy areas where milk animals and meat producing animals graze with consumption of the milk and meat by man, and 4) deposition on the ground with subsequent exposure of man.

GASEOUS WASTE TREATMENT

The operability of the gaseous radwaste treatment system and the ventilation exhaust treatment systems ensures that the systems will be available for use whenever gaseous effluents require treatment prior to release to the environment. The requirement that the appropriate portions of these systems be used when specified provides reasonable assurance that the releases of radioactive materials in gaseous effluents will be kept "as low as is reasonably achievable". This specification implements the requirements of 10 CFR Part 50.36a, General Design Criterion Section 11.1 of the Final Safety Analysis Report for the Donald C. Cook Nuclear Plant, and design objective Section II.D of Appendix I to 10 CFR Part 50. The specified limits governing the use of appropriate portions of the systems were specified as a suitable fraction of the guides forth in Sections II.B and II.C of Appendix I, 10 CFR Part 50, for gaseous effluents.

3.2.5 Radioactive Effluents - Total Dose

a. The dose or dose commitment to a real individual from all uranium fuel cycle sources is limited to ≤ 25 mrem to the total body or any organ (except the thyroid, which is limited to ≤ 75 mrem) over a period of 12 consecutive months.

b. With the calculated doses from the release of radioactive materials in liquid or gaseous effluents exceeding twice the limits of steps 3.2.3c (Dose), 3.2.4b (Dose - Noble Gases), or 3.2.4c (Dose – Iodine-131, Iodine-133, Tritium, and Radioactive Material in Particulate Form) during any calendar quarter, perform the following:

- Investigate and identify the causes for such release rates;
- Define and initiate a program for corrective action;
- Report these actions to the NRC within 30 days from the end of the quarter during which the release occurred.

IF the estimated dose(s) exceeds the limits above, and **IF** the release condition resulting in violation has not already been corrected prior to violation of 40 CFR 190, **THEN** include in the report a request for a variance in accordance with the provisions of 40 CFR 190 and including the specified information of paragraph 190.11(b). Submittal of the report is considered a timely request, and a variance is granted until staff action on the request is complete. The variance only relates to the limits of 40 CFR 190, and does not apply in any way to the requirements for dose limitation of 10 CFR 50, as addressed in other sections of this document.

c. Determine cumulative dose contributions from liquid and gaseous effluents in accordance with this document (including steps 3.2.3c [Dose], 3.2.4b [Dose - Noble Gases], or 3.2.4c [Dose – Iodine-131, Iodine-133, Tritium, and Radioactive Material in Particulate Form]).

BASES -- TOTAL DOSE

This specification is provided to meet the dose limitations of 40 CFR 190. The specification requires the preparation and submittal of a Special Report whenever the calculated doses from plant radioactive effluents exceed twice the design objective doses of Appendix I. For sites containing up to 4 reactors, it is highly unlikely that the resultant dose to a member of the public will exceed the dose limits of 40 CFR 190 if the individual reactors remain within the reporting requirement level. The Special Report will describe a course of action, which should result in the limitations of dose to a member of the public for 12 consecutive months to within the 40 CFR 190 limits. For the purposes of the Special Report, it may be assumed that the dose commitment to any member of the public from other uranium fuel cycle sources is negligible with the exception that dose contributions from other nuclear fuel cycle facilities at the same site or within a radius of 5 miles must be considered. If the dose to any member of the public is estimated to exceed the requirements of 40 CFR 190, the Special Report with a request for a variance (provided the release conditions resulting in violation of 40 CFR 190 have not already been corrected, in accordance with the provision of 40 CFR 190.11), is considered to be a timely request and fulfills the requirements of 40 CFR 190 until NRC staff action is completed. An individual is not considered a member of the public during any period in which he/she is engaged in carrying out any operation, which is part of the nuclear fuel cycle.

3.3 Calculation of Alarm/Trip Setpoints

The alarm and trip setpoints are to provide monitoring, indication, and control of liquid and gaseous effluents. The setpoints are used in conjunction with sampling programs to assure that the releases are kept within the limits of 10 CFR 20, Appendix B, Table 2. Establish setpoints for liquid and gaseous monitors. Depending on the monitor function, it would be a continuous or batch monitor. The different types of monitors are subject to different setpoint methodologies.

One variable used in setpoint calculations is the multiple release point (MRP) factor. The MRP is a factor used such that when all the releases are integrated, the applicable LIMIT value will not be exceeded. The MRP is determined such that the sum of the MRP's for that effluent type (liquid or gaseous) is less than or equal to 1. The value of the MRP is arbitrary, and it should be assigned based on operational performance. The values of the MRP's for each liquid release point are given in Attachment 3.8, Multiple Release Point Factors for Release Points.

The Site stance on instrument uncertainty is taken from HPPOS-223, Consideration of Measurement Uncertainty When Measuring Radiation Levels Approaching Regulatory Limits, which states the NRC position is the result of a valid measurement obtained by a method, which provides a reasonable demonstration of compliance. This value should be accepted and the uncertainty in that measured value need not be considered.

3.3.1 Liquid Monitors

Establish liquid monitor setpoints for each monitor of the liquid effluent release systems. A schematic of the liquid effluent release systems is shown as Attachment 3.9, Liquid Effluent Release Systems. A list of the Plant Liquid Effluent Parameters is in Attachment 3.10, Plant Liquid Effluent Parameters. The details of each system design and operation can be found in the system descriptions. The setpoints are intended to keep releases within the limits of 10 CFR 20, Appendix B, Table 2, Column 2. Determine setpoints using either the batch or the continuous methodology.

a. Liquid Batch Monitor Setpoint Methodology

1. There is only one monitor used on the Waste Disposal System for liquid batch releases. This monitor is identified as RRS-1000. Steam Generator Blowdown radiation monitors also can be used to monitor batch releases while draining steam generators. The function of these monitors is to act as a check on the sampling program. The sampling program determines the nuclides and concentrations of those nuclides prior to release. The discharge and dilution flow rates are then adjusted to keep the release within the limits of 10 CFR 20. Based on the concentrations of nuclides in the release, the count rate on the monitor can be predicted. The high alarm setpoint can then be set above the predicted value up to the maximum setpoint of the system.

2. The radioactive concentration of each batch of radioactive liquid waste to be discharged is determined prior to each release by sampling and analysis in accordance with Attachment 3.6, Radioactive Liquid Waste Sampling and Analysis Program.

3. The allowable release flow rates are determined in order to keep the release concentrations within the requirements of 10 CFR 20, Appendix B, Table 2, Column 2. The equation to calculate the flow rate is from Addendum AA1 of NUREG-0133:

$$\left[\Sigma \frac{C_i}{LIMIT_i}\right] * \frac{f}{MRP} \leq F + f$$

Where;

C_i = the concentration of nuclide "i" in μCi/ml

$LIMIT_i$ = the 10 CFR 20, Appendix B, Table 2, Column 2 limit of nuclide "i" in μCi/ml

f = the effluent flow rate in gpm (Attachment 3.10, Plant Liquid Effluent Parameters)

F = the dilution water flow rate as estimated prior to release. The dilution flow rate is a multiple of 230,000 gpm depending on the number of circulation pumps in operation.

MRP = the multiple release point factor. A factor such that when all the release points are operating at one time the limits of 10 CFR 20 will not be exceeded.

4. This equation must be true during the batch release. Before the release is started, substitute the maximum effluent flow rate and the minimum dilution flow rate for f and F, respectively. If the equation is true, the release can proceed with those flow rates as the limits of operation. If the equation is not true, the effluent flow rate can be reduced or the dilution flow rate can be increased to make the equation true. This equation may be rearranged to solve for the maximum effluent release flow rate (f).

5. The setpoint is used as a quality check on the sampling program. The setpoint is used to stop the effluent flow when the monitor reading is greater than the predicted value from the sampling program. The predicted value is generated by converting the effluent concentration for each gamma emitting radionuclide to counts per unit of time as per Attachment 3.11, Volumetric Detection Efficiencies for Principle Gamma Emitting Radionuclides for Eberline Liquid Monitors, or Attachment 3.12, Counting Efficiency Curves for R-19, and R-24. The sum of all the counts per unit of time is the predicted count rate. The predicted count rate can then be multiplied by a factor to determine the high alarm setpoint that will provide a high degree of conservatism and eliminate spurious alarms.

b. Liquid Continuous Monitor Setpoint Methodology

1. There are eight monitors used as potential continuous liquid release monitors. These monitors are used in the steam generator blowdown (SGBD), blowdown treatment (BDT), and essential service water (ESW) systems.

2. These Westinghouse monitors (R) are being replaced by Eberline monitors (DRS) and are identified as:

   - R-19 or DRS 3100/4100 for SGBD
   - R-24 or DRS 3200/4200 for BDT

   The function of these monitors is to assure that releases are kept within the concentration limits of 10 CFR 20, Appendix B, Table 2, Column 2, entering the unrestricted area following dilution.

3. The monitors on steam generator blowdown and blowdown treatment systems have trip functions associated with their setpoints. Essential service water monitors are equipped with an alarm function only and monitor effluent in the event the Containment Spray Heat Exchangers are used.

4. The equation used to determine the setpoint for continuous monitors is from Addendum AA1 of NUREG-0133:

$$S_p \leq \frac{C * Eff * MRP * F * SF}{f}$$

Where;

S_p = setpoint of monitor (cpm)

C = 5E-7 μCi/ml, maximum effluent control limit from 10 CFR 20, Appendix B, Table 2, Column 2 of a known possible nuclide in effluent stream. (The limiting nuclide shall be evaluated annually by reviewing current nuclides against historical ones in order to determine if one with a more restrictive effluent concentration limit than Sr90 is found. The concentration limit shall be adjusted appropriately.)
-OR-
if a mixture is to be specified,

$$\frac{\Sigma\, C_i}{\Sigma \frac{C_i}{LIMIT_i}}$$

Eff = Efficiency, this information is located in Attachment 3.11, Volumetric Detection Efficiencies for Principle Gamma Emitting Radionuclides for Eberline Liquid Monitors, through Attachment 3.13, Counting Efficiency Curve for R-20, and R-28, for the specific monitors. For Eberline monitors the efficiency is nuclide specific and the calculation changes slightly to:

$$\frac{\Sigma(C_i * Eff_i)}{\Sigma \frac{C_i}{LIMIT_i}} \; replaces \; C * Eff$$

MRP = multiple release point factor. A factor such that when all the release points are operating at one time the limits of 10 CFR 20 will not be exceeded (Attachment 3.8, Multiple Release Point Factors for Release Points). The MRP for ESW monitors is set to 1.

F = dilution water (circ water) flow rate in gpm obtained from Attachment 3.10, Plant Liquid Effluent Parameters. For routine operation, the setpoint should be calculated using the minimum dilution flow rate of 230,000 gpm.

SF = Safety Factor, 0.9.

f = applicable effluent release flow rate in gpm. For routine operation, the setpoint should be calculated using maximum effluent flow rate (Attachment 3.10, Plant Liquid Effluent Parameters).

3.3.2 Gaseous Monitors

For the purpose of implementing Step 3.2.2, Radioactive Gaseous Effluent Monitoring Instrumentation, and Substep 3.2.4a, Dose Rate, the alarm setpoints for gaseous effluents released into unrestricted areas will be established using the following methodology. In addition, the above steps do not apply to instantaneous alarm and trip setpoints for integrating radiation monitors sampling radioiodines, radioactive materials in particulate form and radionuclides other than noble gases. A schematic of the gaseous effluent release systems is presented in Attachment 3.14, Gaseous Effluent Release Systems. Attachment 3.15, Plant Gaseous Effluent Parameters, presents the effluent flow rate parameter(s).

Gaseous effluent monitor high alarm setpoints will routinely be established at a fraction of the maximum allowable setpoint (typically 10% of the setpoint) for ALARA purposes. Alert alarms will normally be set to provide adequate indications of small changes in radiological conditions.

NOTE:	**IF** the setpoint calculation methodology changes or the associated factors change for Unit Vent, Air Ejector and/or Gland Seal monitors, **THEN** initiate a review by Emergency Planning to ensure that the requirements of 10 CFR 50.54 (q) are maintained.

a. Plant Unit Vent

1. The gaseous effluents discharged from the plant vent will be monitored by the plant vent radiation monitor low range noble gas channel [Tag No. VRS-1505 (Unit 1), VRS-2505 (Unit 2)] to assure that applicable alarms and trip actions (isolation of gaseous release) will occur prior to exceeding the limits in step 3.2.4, Gaseous Effluents. The alarm setpoint values will be established using the following unit analysis equation:

$$S_p = \frac{SF * MRP * DL_j}{F_p * \overline{\chi/Q} * \sum_i (W_i * DCF_{ij})}$$

Where;

S_p = the maximum setpoint of the monitor in μCi/cc for release point p, based on the most limiting organ

SF = an administrative operation safety factor, less than 1.0

MRP = a weighted multiple release point factor (≤ 1.0), such that when all site gaseous releases are integrated, the applicable dose will not be exceeded based on the release rate of each effluent point. The MRP is an arbitrary value based on the ratio of the release rate or the volumetric flow rate of each effluent point to the total respective flow rate value of the plant and will be consistent with past operational experience. The MRP is computed as follows:

- Compute the average release rate, Q_p, (or the volumetric flow rate, f_p) from each release point p.
- Compute ΣQp (or Σfp) for all release points.
- Ratio Qp/ΣQp (or fp/Σfp) for each release point. This ratio is the MRP for that specific release point
- Repeat the above bullets for each of the site's eight gaseous release points.

F_p = the maximum volumetric flow rate of release point "p", at the time of the release, in cc/sec. The maximum Unit Vent flow rate, by design, is 186,600 cfm for Unit 1 and 143,400 cfm for Unit 2.

DL_j = dose rate limit to organ "j" in an unrestricted area (mrem/yr).

Based on continuous releases, the dose rate limits, DL_j, from step 3.2.4a, Dose Rate, are as follows:

- Total Body ≤ 500 mrem/year
- Skin ≤ 3000 mrem/year
- Any Organ≤ 1500 mrem/year

$\overline{\chi / Q}$ = The worst case annual average relative concentration in the applicable sector or area, in sec/m^3 (see Attachment 3.16, 10 Year Average of 1995-2004 Data).

W_i = weighted factor for the radionuclide:

$$W_i = \frac{C_i}{\Sigma C_k}$$

Where,

C_i = concentration of the most abundant radionuclide "i"

C_k = total concentration of all identified radionuclides in that release pathway. For batch releases, this value may be set to 1 for conservatism.

DCF_{ij} = dose conversion factor used to relate radiation dose to organ "j", from exposure to radionuclide "i" in mrem m^3 / yr μCi. See following equations.

The dose conversion factor, DCF_{ij}, is dependent upon the organ of concern.

For the whole body: $DCF_{ij} = K_i$

Where;

K_i = whole body dose factor due to gamma emissions for each identified noble gas radionuclide in mrem m^3 / yr μCi. See Attachment 3.18, Dose Factors.

For the skin: $DCF_{ij} = L_i + 1.1M_i$

Where;

L_i = skin dose factor due to beta emissions for each identified noble gas radionuclide, in mrem m^3 / yr μCi. See Attachment 3.18, Dose Factors.

1.1 = the ratio of tissue to air absorption coefficient over the energy range of photons of interest. This ratio converts absorbed dose (mrad) to dose equivalent (mrem).

M_i = the air dose factor due to gamma emissions for each identified noble gas radionuclide in mrad m^3 / yr μCi. See Attachment 3.18, Dose Factors.

For the thyroid, via inhalation: $DCF_{ij} = P_i$

Where;

P_i = the dose parameter, for radionuclides other than noble gas, for the inhalation pathway in mrem m^3 / yr μCi (and the food and ground path, as appropriate). See Attachment 3.18, Dose Factors.

2. The plant vent radiation monitor low range noble gas high alarm channel setpoint, S_p, will be set such that the dose rate in unrestricted areas to the whole body, skin and thyroid (or any other organ), whichever is most limiting, will be less than or equal to 500 mrem/yr, 3000 mrem/yr, and 1500 mrem/yr respectively.

3. The thyroid dose is limited to the inhalation pathway only.

4. The plant vent radiation monitor low range noble gas setpoint, S_p, will be recomputed whenever gaseous releases like Containment Purge, Gas Decay Tanks and CVCS HUTs are discharged through the plant vent to determine the most limiting organ.

5. The high alarm setpoint, S_p, may be established at a lower value than the lowest computed value via the setpoint equation.

6. Containment Pressure Reliefs will not have a recomputed high alarm setpoint, but will use the normal high alarm setpoint due to their randomness and the time constraints involved in recomputation.

7. At certain times, it may be desirable to increase the high alarm setpoint, if the vent flow rate is decreased. This may be accomplished in one of two ways.

$$\frac{\text{Max } Conc\,(\mu Ci/cc) * \text{Max } Flowrate\,(cfm)}{New \text{ Max } Concentration\,(\mu Ci/cc)} = New \text{ Max } cfm$$

-OR-

$$\frac{\text{Max } Conc\,(\mu Ci/cc) * \text{Max } Flowrate\,(cfm)}{New \text{ Max } Flowrate\,(cfm)} = New \text{ Max } \mu Ci/cc$$

b. Waste Gas Storage Tanks

1. The gaseous effluents discharged from the Waste Gas System are monitored by the vent stack monitors VRS-1505 and VRS-2505.

2. In the event of a high radiation alarm, an automatic termination of the release from the waste gas system will be initiated from the plant vent radiation monitor low range noble gas channel (VRS-1505 or VRS-2505). Therefore, for any gaseous release configuration, which includes normal operation and waste gas system gaseous discharges, the alarm setpoint of the plant vent radiation monitor will be recomputed to determine the most limiting organ based on all gaseous effluent source terms.

   Chemical and Volume Control System Hold Up Tanks (CVCS HUT), containing high gaseous oxygen concentrations, may be released under the guidance of waste gas storage tank utilizing approved Operations' procedures.

3. It is normally prudent to allow 45 days of decay prior to releasing a Gas Decay Tank (GDT). There are extenuating, operational circumstances that may prevent this from occurring. Under these circumstances, such as high oxygen concentration creating a combustible atmosphere, it is prudent to waive the 45-day decay for safety's sake.

c. Containment Purge and Exhaust System

1. The gaseous effluents discharged by the Containment Purge and Exhaust Systems and Instrumentation Room Purge and Exhaust System are monitored by the plant vent radiation monitor noble gas channels (VRS-1505 for Unit 1, VRS-2505 for Unit 2); and alarms and trip actions will occur prior to exceeding the limits in step 3.2.4a, Dose Rate.

2. For the Containment System, a continuous air sample from the containment atmosphere is drawn through a closed, sealed system to the radiation monitors (Tag No. ERS-1300/1400 for Unit 1 and ERS-2300/2400 for Unit 2). During purges, these monitor setpoints will give a Purge and Exhaust Isolation signal upon actuation of high alarm setpoints for particulate and noble gas channels. The sample is then returned to containment. Grab sample analysis is performed for a Containment purge before release.

3. The Upper Containment area is monitored by normal range area gamma monitors (Tag No. VRS-1101/1201 for Unit 1 and VRS-2101/2201 for Unit 2), which also give Purge and Exhaust Isolation Trip signals upon actuation of their high alarm.

4. For the Containment Pressure Relief System, no sample is routinely taken prior to release, but a sample is obtained twice per month.

5. The containment airborne and area monitors, upon actuation of their high alarm, will automatically initiate closure of the Containment and Instrument Room purge supply and exhaust duct valves and containment pressure relief system valves. Complete trip of all isolation control devices requires high alarm of one of the two Train A monitors (ERS-1300/2300 or VRS-1101/2101) and one of the two Train B monitors (ERS-1400/2400 or VRS-1201/2201).

d. Steam Jet Air Ejector System (SJAE)

1. The gaseous effluents from the Steam Jet Air Ejector System discharged to the environment are continuously monitored by radiation monitor (Tag No. SRA-1900 for Unit 1 and SRA-2900 for Unit 2). The monitor will alarm prior to exceeding the limits of step 3.2.4a, Dose Rate. The alarm setpoint for the Condenser Air Ejector System monitor will be based on the maximum air ejector exhaust flow rate, (Attachment 3.15, Plant Gaseous Effluent Parameters). The alarm setpoint value will be established using the following unit analysis equation:

$$S_{SJAE} = \frac{SF * MRP * DL_j}{F_p * \overline{\chi/Q} * \sum_i (W_i * DCF_{ij})}$$

Where;

S_{SJAE} = the maximum setpoint, based on the most limiting organ, in μCi/cc and where the other terms are as previously defined

e. Gland Seal Condenser Exhaust

1. The gaseous effluents from the Gland Seal Condenser Exhaust discharged to the environment are continuously monitored by radiation monitor (Tag No. SRA-1800 for Unit 1 and SRA-2800 for Unit 2). The radiation monitor will alarm prior to exceeding the limits of step 3.2.4a, Dose Rate. The alarm setpoint for the GSCE monitor will be based on the maximum condenser exhaust flow rate (1260 CFM for Unit 1, 2754 CFM each for the two Unit 2 vents). The alarm setpoint value will be established using the following unit analysis equation:

$$S_{GSCE} = \frac{SF * MRP * DL_j}{F_p * \overline{\chi/Q} * \sum_i (W_i * DCF_{ij})}$$

Where;

S_{GSCE} = the maximum setpoint, based on the most limiting organ, in μCi/cc and where the other terms are as previously defined

3.4 Radioactive Effluents Total Dose

3.4.1 The cumulative dose contributions from liquid and gaseous effluents will be determined by summing the cumulative doses as derived in steps 3.2.3c (Dose), 3.2.4b (Dose - Noble Gases), and 3.2.4c (Dose – Iodine-131, Iodine-133, Tritium, and Radioactive Material in Particulate Form) of this procedure. Dose contribution from direct radiation exposure will be based on the results of the direct radiation monitoring devices located at the REMP monitoring stations. See NUREG-0133, section 3.8.

3.5 Radiological Environmental Monitoring Program (REMP)

3.5.1 Purpose of the REMP

a. The purpose of the REMP is to:

- Establish baseline radiation and radioactivity concentrations in the environs prior to reactor operations,
- Monitor critical environmental exposure pathways,
- Determine the radiological impact, if any, caused by the operation of the Donald C. Cook Nuclear Plant upon the local environment.
- Assist with fulfilling the requirements of the Groundwater Protection Initiative (GPI).

b. The first purpose of the REMP was completed prior to the initial operation of either of the two nuclear units at the Donald C. Cook Nuclear Plant Site. The second and third purposes of the REMP are an on-going operation and as such various environmental media and exposure pathways are examined. The various pathways and sample media used are delineated in Attachment 3.19, Radiological Environmental Monitoring Program Sample Stations, Sample Types, Sample Frequencies. Included is a list of the sample media, analysis required, sample stations, and frequency requirements for both collection and analysis. Attachment 3.19, Radiological Environmental Monitoring Program Sample Stations, Sample Types, Sample Frequencies, defines the scope of the REMP for the Donald C. Cook Nuclear Plant.

3.5.2 Conduct of the REMP [Ref. 5.2.1v]

a. Conduct sample collection and analysis for the REMP in accordance with Attachment 3.19, Radiological Environmental Monitoring Program Sample Stations, Sample Types, Sample Frequencies, Attachment 3.20, Maximum Values for Lower Limits of DetectionsA,B - REMP, and Attachment 3.21, Reporting Levels for Radioactivity Concentrations in Environmental Samples. These are applicable at all times. The on-site monitoring locations are shown on Attachment 3.22, On-Site Monitoring Location - REMP, and the off-site monitoring locations are shown on Attachment 3.23, Off-Site Monitoring Locations - REMP.

1. Perform each surveillance requirement within the specified time interval in Attachment 3.19, Radiological Environmental Monitoring Program Sample Stations, Sample Types, Sample Frequencies, with a maximum allowable extension not to exceed 25% of the surveillance interval.

2. If an environmental sample cannot be collected in accordance with step 3.5.2a, submit a description of the reasons for deviation and the actions taken to prevent a reoccurrence as part of the Annual Radiological Environmental Operating Report (AREOR).

3. Deviations from the required sampling schedule are permitted if specimens are unobtainable due to hazardous conditions, seasonal unavailability, or malfunction of automatic sampling equipment. If the deviation from the required sampling schedule is due to the malfunction of automatic sampling equipment, make every effort to complete the corrective action prior to the end of the next sampling period.

NOTE:	**Only** one report per event is required.

NOTE:	Radioactivity from sources other than plant effluents do not require a Special Report.

4. **IF** any of the following conditions are identified:

   - A radionuclide associated with plant effluents is detected in any REMP sample medium AND its concentration exceeded the limits specified in Attachment 3.21, Reporting Levels for Radioactivity Concentrations in Environmental Samples,

   - More than one radionuclide associated with plant effluents is detected in any REMP sample medium AND the Total Fractional Level, when averaged over the calendar quarter, is greater than or equal to 1.

   THEN complete the following steps, as applicable:

   - Submit a Special Report to the Nuclear Regulatory Commission within 30 days.
   - Submit a Special Report to designated state and local organizations for groundwater or surface water media which could be used as drinking water.
   - Evaluate the following items for inclusion in Special Reports:

     1) Release conditions
     2) Environmental factors
     3) Corrective actions
     4) Additional factors which may have contributed to the identified levels

5. **WHEN** submission of a Special Report to designated state and local organizations is required, **THEN** perform the following:

   - Communicate event specific information to designated state and local organization personnel by the end of the next business day.
   - Document the notification using PMP-6090-PCP-100, Data Sheet 2, Part 4 Radioactive Liquid Spill Which May Impact Groundwater.
   - Forward a copy of the notification to the Environmental Department Manager.

6. **IF** a currently sampled milk farm location becomes unavailable, **THEN** conduct a special milk farm survey within 15 days.

   a) **IF** the unavailable location was an indicator farm, **THEN** an alternate sample location may be established within eight miles of the Donald C. Cook Nuclear Plant, if one is available.

   b) **IF** the unavailable location was a background farm, **THEN** an alternate sample location may be established greater than 15 but less than 25 miles of the Donald C. Cook Nuclear Plant in one of the less prevalent wind direction sectors, if one is available.

   c) **IF** a replacement farm is unobtainable and the total number of indicator farms is less than three or the background farms is less than one, **THEN** perform monthly vegetation sampling in lieu of milk sampling when vegetation is available.

BASES - RADIOLOGICAL ENVIRONMENTAL MONITORING PROGRAM (REMP)

The REMP provides measurements of radiation and radioactive materials in those exposure pathways and for those radionuclides, which lead to the highest potential radiation exposures of individuals resulting from the station operation. Thereby, this monitoring program supplements the radiological effluent monitoring program by verifying the measurable concentration of radioactive materials and levels of radiation are not higher than expected on the basis of the effluent measurements and modeling of the environmental exposure pathways. The initially specified REMP was effective for the first three years of commercial operation. Program changes may be initiated based on operational experience in accordance with the requirements of Technical Specification 5.5.1.c.

The detection capabilities, required by Attachment 3.20, Maximum Values for Lower Limits of DetectionsA,B - REMP, are the state-of-the-art for routine environmental measurements in industrial laboratories.

It should be recognized that the LLD is defined as a priori (before the fact) limit representing the capability of a measurement system and not as a posteriori (after the fact) limit for a particular measurement. Analyses shall be performed in such a manner that the stated LLDs will be achieved under routine analysis conditions. Occasionally, background fluctuations, unavoidably small sample sizes, the presence of interfering nuclides, or other uncontrollable circumstances may render these LLDs unachievable. In such cases, the contributing factors will be identified and described in the Annual Radiological Environmental Operating Report.

3.5.3 Annual Land Use Census [Ref. 5.2.1v]

a. Conduct a land use census and identify the location of the nearest milk animal, the nearest residence and the nearest garden of greater than 500 square feet producing fresh leafy.vegetables in each of the ten land sectors within a distance of five miles.

b. In lieu of the garden census, broad leaf vegetation sampling of at least three different kinds of vegetation (if available) may be performed as close to the site boundary as possible (within 5 miles) in each of two different direction sectors with the highest average deposition factor (D/Q) value.

c. Conduct this land use census annually between the dates of June 1 and October 1 by door-to-door survey, aerial survey, or by consulting local agricultural authorities.

1. With a land use census identifying a location(s), which yields a calculated dose or dose commitment greater than the values currently being calculated in this document, make appropriate changes to incorporate the new location(s) within 30 days, if possible.

BASES - LAND USE CENSUS

This is provided to ensure changes in the use of unrestricted areas are identified and modifications to the monitoring program are made, if required by the results of the census. This census satisfies the requirements of Section IV.B.3 of Appendix I to 10 CFR Part 50. Restricting the census to gardens of greater than 500 square feet provides assurance that significant exposure pathways via leafy vegetables will be identified and monitored since a garden of this size is the minimum required to produce the quantity (26 kg/yr) of leafy vegetables assumed in Regulatory Guide 1.109 for consumption of a child. To determine this minimum garden size, the following assumptions were used: 1) that 20% of the garden was used for growing broad leaf vegetation (that is, similar to lettuce and cabbage), and 2) a vegetation field of 2 kg/square meter.

3.5.4 Interlaboratory Comparison Program

a. In order to comply with Reg. Guides 4.1 and 4.15, the analytical vendor participates in an Interlaboratory Comparison Program, for radioactive materials. Address program results and identified deficiencies in the AREOR.

1. With analyses not being performed as required above, report the corrective actions taken to prevent a recurrence to the Commission in the AREOR.

BASES - INTERLABORATORY COMPARISON PROGRAM

The requirement for participation in an Interlaboratory Comparison Program is provided to ensure independent checks on the precision and accuracy of the measurements of radioactive material in environmental sample matrices are performed as part of the quality assurance program for environmental monitoring in order to demonstrate the results are reasonably valid.

3.6 Meteorological Model

3.6.1 Three towers are used to determine the meteorological conditions at Donald C. Cook Nuclear Plant. One of the towers is located at the Lake Michigan shoreline to determine the meteorological parameters associated with unmodified shoreline air. The data is accumulated by microprocessors at the tower sites and normally transferred to the central computer every 15 minutes.

3.6.2 The central computer uses a meteorological software program to provide atmospheric dispersion and deposition parameters. The meteorological model used is based on guidance provided in Reg. Guide 1.111 for routine releases. All calculations use the Gaussian plume model.

3.7 Reporting Requirements

3.7.1 Annual Radiological Environmental Operating Report (AREOR)

a. Submit routine radiological environmental operating reports covering the operation of the units during the previous calendar year prior to May 15 of each year. [Ref 5.2.1j, TS 5.6.2]

b. Include in the AREOR:

- Summaries, interpretations, and statistical evaluation of the results of the radiological environmental surveillance activities for the reporting period.

- A comparison with pre-operational studies, operational controls (as appropriate), and previous environmental surveillance reports and an assessment of the observed impacts of the plant operation on the environment.

- The results of the land use censuses required by step 3.5.3, Annual Land Use Census.

- If harmful effects or evidence of irreversible damage are detected by the monitoring, provide in the report an analysis of the problem and a planned course of action to alleviate the problem.

- Summarized and tabulated results of all radiological environmental samples taken during the reporting period. In the event that some results are not available for inclusion with the report, submit the report noting and explaining the reasons for the missing results. Submit the missing data as soon as possible in a supplementary report.

- A summary description of the REMP including sampling methods for each sample type, size and physical characteristics of each sample type, sample preparation methods, analytical methods, and measuring equipment used.

- A map of all sample locations keyed to a table giving distances and directions from one reactor.

- The results of participation in the Interlaboratory Comparison Program required by step 3.5.4, Interlaboratory Comparison Program.

- The results of non-REMP samples taken for informational purposes in support of non-program specific investigations, such as rainfall studies of tritium recapture for example.

3.7.2 Annual Radiological Effluent Release Report (ARERR)

a. Submit routine ARERR covering the operation of the unit during the previous 12 months of operation by May 1st of each year. [Ref 5.2.1j, TS 5.6.3]

b. Include in the ARERR a summary of the quantities of radioactive liquid and gaseous effluents and solid waste released from the units as outlined in Reg. Guide 1.21, "Measuring, Evaluating and Reporting in Solid Wastes and Releases of Radioactive Materials in Liquid and Gaseous Effluents from Light-Water Cooled Nuclear Power Plants," with data summarized on a quarterly basis following the format of Appendix B, thereof.

c. Submit in the ARERR by May 1st of each year and include a quarterly summary of hourly meteorological data collected during the reporting period.

- This summary may be in the form of an hour-by-hour listing of wind speed, wind direction, atmospheric stability, and precipitation (if measured) on magnetic tape, or in the form of joint frequency distributions of wind speed, wind direction and atmospheric stability.

- Include an assessment of the radiation doses due to the radioactive liquid and gaseous effluents released from the unit or station during the previous calendar year.

- Include an assessment of the radiation doses from radioactive liquid and gaseous effluents to members of the public due to their activities inside the site boundary during the reporting period. Include all assumptions used in making these assessments (that is, specific activity, exposure time and location) in these reports.

- Use the meteorological conditions concurrent with the time of release of radioactive materials in gaseous effluents (as determined by sampling frequency and measurement) for determining the gaseous pathway doses.

- Inoperable radiation monitor periods exceeding 30 continuous days; explain causes of inoperability and actions taken to prevent reoccurrence.

d. Submit the ARERR [Ref. 5.2.1x] by May 1st of each year and include an assessment of radiation doses to the likely most exposed member of the public from reactor releases and other nearby uranium fuel cycle sources (including doses from primary effluent pathways and direct radiation) for the previous 12 consecutive months to show conformance with 40 CFR 190, Environmental Radiation Protection Standards for Nuclear Power Operation. Acceptable methods for calculating the dose contribution from liquid and gaseous effluents are given in Reg. Guide 1.109, Rev.1.

e. Include in the ARERR the following information for each type of solid waste shipped off-site during the report period:

- Volume (cubic meters),

- Total curie quantity (specify whether determined by measurement or estimate),

- Principle radionuclides (specify whether determined by measurement or estimate),

- Type of waste (example: spent resin, compacted dry waste, evaporator bottoms),

- Type of container (example: LSA, Type A, Type B, Large Quantity),
  -AND-
- Solidification agent (example: cement).

f. Include in the ARERR unplanned releases of radioactive materials in gaseous and liquid effluent from the site to unrestricted areas on a quarterly basis.

g. Include in the ARERR any change to this procedure made during the reporting period.

h. Due to the site having shared gaseous and liquid waste systems dose calculations will be performed on a per site bases using the per unit values. This is ALARA and will ensure compliance with 40 CFR 141, National Primary Drinking Water Regulations. Unit specific values are site values divided by two.

i. Include in the ARERR groundwater sample results taken that are in support of the Groundwater Protection Initiative (GPI) but are not part of the REMP.

3.8 10 CFR 50.75 (g) Implementation

3.8.1 Records of spills or other unusual occurrences involving the spread of contamination in and around the site. These records may be limited to instances when significant contamination remains after decontamination or when there is a reasonable likelihood that contaminants may have spread to inaccessible areas, as in the case of possible seepages.

3.8.2 These records shall include any known information or identification of involved nuclides, quantities, and concentrations.

3.8.3 This information is necessary to ensure all areas outside the radiological-restricted area are documented for surveying and remediation during decommissioning. There is a retention schedule item for 10 CFR 50.75(g) where this information is filed in Nuclear Documents Management to ensure all required areas are listed to prevent their omission.

3.9 Reporting/Management Review

3.9.1 Incorporate any changes to this procedure in the ARERR.

3.9.2 Update this procedure when the Radiation Monitoring System, its instruments, or the specifications of instruments are changed.

3.9.3 Review or revise this procedure as appropriate based on the results of the land use census and REMP.

3.9.4 Evaluate any changes to this procedure for potential impact on other related Department Procedures.

3.9.5 Review this procedure during the first quarter of each year and update it if necessary. Review Attachment 3.16, 10 Year Average of 1995-2004 Data, and document using Attachment 3.17, Annual Evaluation of $\overline{\chi/Q}$ **and** $\overline{D/Q}$ Values For All Sectors. The $\overline{\chi/Q}$ and $\overline{D/Q}$ values will be evaluated to ensure all data is within ± 3 standard deviations of the 10 year annual average data and documented by completing Attachment 3.17, Annual Evaluation of $\overline{\chi/Q}$ **and** $\overline{D/Q}$ Values For All Sectors, and filed in accordance with the retention schedule.

4 FINAL CONDITIONS

4.1 None.

5 REFERENCES

5.1 Use References:

5.1.1 "Implementation of Programmatic Controls for Radiological Effluent Technical Specifications in the Administrative Controls Section of the Technical Specifications and the Relocation of Procedural Details of RETS to the Off-Site Dose Calculation Manual or to the Process Control Program (Generic Letter 89-01)", United States Nuclear Regulatory Commission, January 31, 1989

5.1.2 12-THP-6010-RPP-601, Preparation of the Annual Radioactive Effluent Release Report

5.1.3 12-THP-6010-RPP-639, Annual Radiological Environmental Operating Report (AREOR) Preparation And Submittal

5.1.4 PMP-6090-PCP-100, Spill Response- Oil, Polluting, Hazardous Materials, and Radioactive Spills

5.2 Writing References:

5.2.1 Source References:

a. 10 CFR 20, Standards for Protection Against Radiation

b. 10 CFR 50, Domestic Licensing of Production and Utilization Facilities

c. PMI-6010, Radiation Protection Plan

d. NUREG-0472

e. NUREG-1301

f. NUREG-0133

g. Regulatory Guide 1.109, non-listed parameters are taken from these data tables

h. Regulatory Guide 1.111

i. Regulatory Guide 1.113

j. Updated Final Safety Analysis Report (UFSAR)

k. Technical Specifications 5.4.1.e, 5.5.1.c, 5.5.3, 5.6.2, and 5.6.3

l. Final Environmental Statement Donald. C. Cook Nuclear Plant, August 1973

m. NUREG-0017

n. ODCM Setpoints for Liquid [and Gaseous] Effluent Monitors (Bases), ENGR 107-04 8112.1 Environs Rad Monitor System

o. HPPOS-223, Consideration of Measurement Uncertainty When Measuring Radiation Levels Approaching Regulatory Limits

p. Watts - Bar Jones (WBJ) Document, R-86-C-001, The Primary Calibration of Eberline Instrument Corporation SPING - 3/4 Low, Mid, and High Range Noble Gas Detectors

q. WBJ Document, R-86-C-003, The Primary Calibration of Eberline Instrument Corporation DAM-4 and Water Monitor

r. 40 CFR 190, Environmental Radiation Protection Standards for Nuclear Power Operations

s. NRC Commitment 6309 (N94083 dated 11/10/94)

t. NRC Commitment 1151

u. NRC Commitment 1217

v. NRC Commitment 3240

w. NRC Commitment 3850

x. NRC Commitment 4859

y. NRC Commitment 6442

z. NRC Commitment 3768

aa. DIT-B-00277-00, HVAC Systems Design Flows

bb. Regulatory Guide 1.21

cc. Regulatory Guide 4.1

dd. 1-2-V3-02-Calc #4, Unit Vent Sample Flow rate for isokinetic particulates and Iodine sampling

ee. HPS N13.30-1996, Appendix A Rationale for Methods of Determining Minimum Detectable Amount (MDA) and Minimum Testing Level (MDL

ff. DIT-B-01971-00, Dose Factors for Radioactive Particulate Gaseous Effluents Associated with the Child by the Inhalation Pathway

gg. DIT-B-01987-00, Ground Plane & Food Dose Factors P_i for Radioiodines and Radioactive Particulate Gaseous Effluents

hh. NRC Commitment 1010

ii. NEI 07-07 Groundwater Protection Initiative

jj. ANI 07-01 Potential for Unmonitored and Unplanned Off-Site Releases of Radioactive Material

5.2.2 General References

a. Cook Nuclear Plant Start-Up Flash Tank Flow Rate letter from D. L. Boston dated January 21, 1997

b. Letter from B.P. Lauzau, Venting of Middle CVCS Hold-Up Tank Directly to Unit Vent, May 1, 1992

c. AEP Design Information Transmittal on Aux Building Ventilation Systems

d. PMP-4030.EIS.001, Event-Initiated Surveillance Testing

e. Environmental Position Paper, Fe Impact on Release Rates, approved 3/14/00

f. Environmental Position Paper, Methodology Change from Sampling Secondary System Gaseous Effluents for Power Changes Exceeding 15% within 1 hr to Responding to Gaseous Alert Alarms, approved 4/4/00

g. CR 02150078, RRS-1000 efficiency curve usage

h. Environmental Position Paper, Unit Vent Compensatory Sampling, approved 4/14/05

R_i Dose Factors

PATHWAY

Nuclide	Ground	Vegetable	Meat	Cow Milk	Goat Milk	Inhalation
H-3	0.0E+00	4.0E+03	3.3E+02	2.4E+03	4.9E+03	1.3E+03
C-14	0.0E+00	3.5E+06	5.3E+05	3.2E+06	3.2E+06	3.6E+04
Cr-51	5.4E+06	1.1E+07	1.5E+06	6.9E+06	8.3E+05	2.1E+04
Mn-54	1.6E+09	9.4E+08	2.1E+07	2.9E+07	3.5E+06	2.0E+06
Fe-59	3.2E+08	9.6E+08	1.7E+09	3.1E+08	4.0E+07	1.5E+06
Co-58	4.4E+08	6.0E+08	2.9E+08	8.4E+07	1.0E+07	1.3E+06
Co-60	2.5E+10	3.2E+09	1.0E+09	2.7E+08	3.2E+07	8.6E+06
Zn-65	8.5E+08	2.7E+09	9.5E+08	1.6E+10	1.9E+09	1.2E+06
Sr-89	2.5E+04	3.5E+10	3.8E+08	9.9E+09	2.1E+10	2.4E+06
Sr-90	0.0E+00	1.4E+12	9.6E+09	9.4E+10	2.0E+11	1.1E+08
Zr-95	2.9E+08	1.2E+09	1.5E+09	9.3E+05	1.1E+05	2.7E+06
Sb-124	6.9E+08	3.0E+09	4.4E+08	7.2E+08	8.6E+07	3.8E+06
I-131	1.0E+07	2.4E+10	2.5E+09	4.8E+11	5.8E+11	1.6E+07
I-133	1.5E+06	4.0E+08	6.0E+01	4.4E+09	5.3E+09	3.8E+06
Cs-134	7.9E+09	2.5E+10	1.1E+09	5.0E+10	1.5E+11	1.1E+06
Cs-136	1.7E+08	2.2E+08	4.2E+07	5.1E+09	1.5E+10	1.9E+05
Cs-137	1.2E+10	2.5E+10	1.0E+09	4.5E+10	1.4E+11	9.0E+05
Ba-140	2.3E+07	2.7E+08	5.2E+07	2.1E+08	2.6E+07	2.0E+06
Ce-141	1.5E+07	5.3E+08	3.0E+07	8.3E+07	1.0E+07	6.1E+05
Ce-144	7.9E+07	1.3E+10	3.6E+08	7.3E+08	8.7E+07	1.3E+07

Units for all except inhalation pathway are m^2 mr sec / yr μCi, inhalation pathway units are mr m^3 / yr μCi.

U_{ap} Values to be Used For the Maximum Exposed Individual

Pathway	Infant	Child	Teen	Adult
Fruits, vegetables and grain (kg/yr)	--	520	630	520
Leafy vegetables (kg/yr)	--	26	42	64
Milk (L/yr)	330	330	400	310
Meat and poultry (kg/yr)	--	41	65	110
Fish (kg/yr)	--	6.9	16	21
Drinking water (L/yr)	330	510	510	730
Shoreline recreation (hr/yr)	--	14	67	12
Inhalation (m^3/yr)	1400	3700	8000	8000

Table E-5 of Reg. Guide 1.109.

B_{ip} Factors for Aquatic Foods
ρCi l / kg ρCi

Element	Fish	Invertebrate
H	9.0E-1	9.0E-1
C	4.6E3	9.1E3
Na	1.0E2	2.0E2
P	1.0E5	2.0E4
Cr	2.0E2	2.0E3
Mn	4.0E2	9.0E4
Fe	1.0E2	3.2E3
Co	5.0E1	2.0E2
Ni	1.0E2	1.0E2
Cu	5.0E1	4.0E2
Zn	2.0E3	1.0E4
Br	4.2E2	3.3E2
Rb	2.0E3	1.0E3
Sr	3.0E1	1.0E2
Y	2.5E1	1.0E3
Zr	3.3E0	6.7E0
Nb	3.0E4	1.0E2
Mo	1.0E1	1.0E1
Tc	1.5E1	5.0E0
Ru	1.0E1	3.0E2
Rh	1.0E1	3.0E2
Te	4.0E2	6.1E3
I	1.5E1	5.0E0
Cs	2.0E3	1.0E3
Ba	4.0E0	2.0E2
La	2.5E1	1.0E3
Ce	1.0E0	1.0E3
Pr	2.5E1	1.0E3
Nd	2.5E1	1.0E3
W	1.2E3	1.0E1
Np	1.0E1	4.0E2

Table A-1 of Reg. Guide 1.109.

D_{aipj} External Dose Factors for Standing on Contaminated Ground
mrem m^2 / hr ρCi

Radionuclide	Total Body	Skin
H-3	0	0
C-14	0	0
Na-24	2.5E-8	2.9E-8
P-32	0	0
Cr-51	2.2E-10	2.6E-10
Mn-54	5.8E-9	6.8E-9
Mn-56	1.1E-8	1.3E-8
Fe-55	0	0
Fe-59	8.0E-9	9.4E-9
Co-58	7.0E-9	8.2E-9
Co-60	1.7E-8	2.0E-8
Ni-63	0	0
Ni-65	3.7E-9	4.3E-9
Cu-64	1.5E-9	1.7E-9
Zn-65	4.0E-9	4.6E-9
Zn-69	0	0
Br-83	6.4E-11	9.3E-11
Br-84	1.2E-8	1.4E-8
Br-85	0	0
Rb-86	6.3E-10	7.2E-10
Rb-88	3.5E-9	4.0E-9
Rb-89	1.5E-8	1.8E-8
Sr-89	5.6E-13	6.5E-13
Sr-91	7.1E-9	8.3E-9
Sr-92	9.0E-9	1.0E-8
Y-90	2.2E-12	2.6E-12
Y-91m	3.8E-9	4.4E-9
Y-91	2.4E-11	2.7E-11
Y-92	1.6E-9	1.9E-9
Y-93	5.7E-10	7.8E-10
Zr-95	5.0E-9	5.8E-9
Zr-97	5.5E-9	6.4E-9
Nb-95	5.1E-9	6.0E-9
Mo-99	1.9E-9	2.2E-9
Tc-99m	9.6E-10	1.1E-9
Tc-101	2.7E-9	3.0E-9
Ru-103	3.6E-9	4.2E-9
Ru-105	4.5E-9	5.1E-9
Ru-106	1.5E-9	1.8E-9
Ag-110m	1.8E-8	2.1E-8
Te-125m	3.5E-11	4.8E-11

Radionuclide	Total Body	Skin
Te-127m	1.1E-12	1.3E-12
Te-127	1.0E-11	1.1E-11
Te-129m	7.7E-10	9.0E-10
Te-129	7.1E-10	8.4E-10
Te-131m	8.4E-9	9.9E-9
Te-131	2.2E-9	2.6E-6
Te-132	1.7E-9	2.0E-9
I-130	1.4E-8	1.7E-8
I-131	2.8E-9	3.4E-9
I-132	1.7E-8	2.0E-8
I-133	3.7E-9	4.5E-9
I-134	1.6E-8	1.9E-8
I-135	1.2E-8	1.4E-8
Cs-134	1.2E-8	1.4E-8
Cs-136	1.5E-8	1.7E-8
Cs-137	4.2E-9	4.9E-9
Cs-138	2.1E-8	2.4E-8
Ba-139	2.4E-9	2.7E-9
Ba-140	2.1E-9	2.4E-9
Ba-141	4.3E-9	4.9E-9
Ba-142	7.9E-9	9.0E-9
La-140	1.5E-8	1.7E-8
La-142	1.5E-8	1.8E-8
Ce-141	5.5E-10	6.2E-10
Ce-143	2.2E-9	2.5E-9
Ce-144	3.2E-10	3.7E-10
Pr-143	0	0
Pr-144	2.0E-10	2.3E-10
Nd-147	1.0E-9	1.2E-9
W-187	3.1E-9	3.6E-9
Np-239	9.5E-10	1.1E-9

Table E-6 of Reg. Guide 1.109.

INSTRUMENT	Minimum Channels Operable[a]	Applicability	Action
1. Gross Radioactivity Monitors Providing Automatic Release Termination			
a. Liquid Radwaste Effluent Line (RRS-1001)	(1)#	At times of release	1
b. Steam Generator Blowdown Line (R-19, DRS 3/4100 +)	(1)#	At times of release**	2
c. Steam Generator Blowdown Treatment Effluent (R-24, DRS 3/4200 +)	(1)#	At times of release	2
2. Gross Radioactivity Monitors Not Providing Automatic Release Termination			
a. Service Water System Effluent Line (R-20, R-28)	(1) per train	At all times	3
3. Continuous Composite Sampler Flow Monitor			
a. Turbine Building Sump Effluent Line	(1)	At all times	3
4. Flow Rate Measurement Devices			
a. Liquid Radwaste Line (RFI-285)	(1)	At times of release	4
b. Discharge Pipes*	(1)	At all times	NA
c. Steam Generator Blowdown Treatment Effluent (DFI-352)	(1)	At times of release	4
d. Individual Steam Generator sample flow to Blowdown radiation monitors alarm (DFA-310, 320, 330 and 340)	(1) per generator	At times of release	5

* Pump curves and valve settings may be utilized to estimate flow; in such cases, Action Statement 4 is not applicable. This is primarily in reference to start up flash tank flow.

\# OPERABILITY of RRS-1001 includes OPERABILITY of sample flow switch RFS-1010, which is an attendant instrument as defined in Technical Specification section 1.1, under the term Operable – Operability. This item is also applicable for all Eberline liquid monitors (and their respective flow switches) listed here.

** Since these monitors can be used for either batch or continuous release the appropriate action statement of 1 or 2 should apply (that is, Action 1 if a steam generator drain is being performed in lieu of Action 2). It is possible, due to the steam generator sampling system lineup, that BOTH action statements are actually entered. This would be the case when sampling for steam generator draining requires duplicate samples while the sample system is lined up to discharge to the operating units blowdown system. In this case the steam generator drain samples can fulfill the sample requirement for Action 2 also. Action 2 would be exited when sampling was terminated.

\+ Some Westinghouse I radiation monitors are being replaced by Eberline (DRS) monitors. Either monitor can fulfill the operability requirement. Ensure surveillances are current for operability of the instrumentation prior to using it to satisfy applicability requirement.

A **IF** an RMS monitor is inoperable solely as the result of the loss of its control room alarm annunciation, **THEN** one of the following actions is acceptable to satisfy the ODCM action statement compensatory surveillance requirement:

1. Collect grab samples and conduct laboratory analyses per the specific monitor's action statement,
   -OR-

2. Collect local monitor readings at a frequency equal to or greater than (more frequently than) the action frequency.

IF the RMS monitor is inoperable for reasons other than the loss of control room annunciation, **THEN** the only acceptable action is taking grab samples and conducting laboratory analyses as the reading is equivalent to a grab sample when the monitor is functional.

TABLE NOTATION

Action 1 With the number of channels OPERABLE less than required by the Minimum Channels OPERABLE requirement, effluent releases may continue, provided that prior to initiating a release:

1. At least two independent samples are analyzed in accordance with Step 3.2.3a and;
2. At least two technically qualified members of the Facility Staff independently verify the discharge valving. Otherwise, suspend release of radioactive effluents via this pathway.

Action 2 With the number of channels OPERABLE less than required by the Minimum Channels OPERABLE requirement, effluent releases via this pathway may continue for up to 30 days provided grab samples are analyzed for gross radioactivity (beta or gamma) at a limit of detection of at least 10-7 μCi/gram:

1. At least once per shift when the specific activity of the secondary coolant is > 0.01 μCi/gram DOSE EQUIVALENT I-131.
2. At least once per 24 hours when the specific activity of the secondary coolant is ≤ 0.01 μCi/gram DOSE EQUIVALENT I-131.

After 30 days, **IF** the channels are not OPERABLE, **THEN** continue releases with required grab samples provide a description of why the inoperability was not corrected in the next Annual Radiological Effluent release Report.

Action 3 With the number of channels OPERABLE less than required by the Minimum Channels OPERABLE requirement, effluent releases via this pathway may continue for up to 30 days provided that at least once per shift, grab samples are collected and analyzed for gross radioactivity (beta or gamma) at a lower limit of detection of at least 10-7 μCi/ml. Since the Westinghouse ESW monitors (R-20 and R-28) are only used for post LOCA leak detection and have no auto trip function associated with them, grab samples are only needed if the Containment Spray Heat Exchanger is in service. After 30 days, **IF** the channels are not OPERABLE, **THEN** continue releases with grab samples once per shift and provide a description of why the inoperability was not corrected in the next Annual Radiological Effluent release Report.

Action 4 With the number of channels OPERABLE less than required by the Minimum Channels OPERABLE requirement, effluent releases via this pathway may continue for up to 30 days provided the flow rate is estimated at least once per 4 hours during actual releases. After 30 days, **IF** the channels are not OPERABLE, **THEN** continue releases with grab samples once per shift and provide a description of why the inoperability was not corrected in the next Annual Radiological Effluent release Report.

Action 5 With the number of channels OPERABLE less than required by the Minimum Channels OPERABLE requirement, effluent releases via this pathway may continue for up to 30 days provided the flow rate is verified to be within the required band at least once per 4 hours during actual releases. After 30 days, **IF** the channels are not OPERABLE, **THEN** continue releases with grab samples once per shift and provide a description of why the inoperability was not corrected in the next Annual Radiological Effluent release Report. **IF** the flow cannot be obtained within the desired band, **THEN** declare the radiation monitor inoperable and enter the appropriate actions statement, Action 2.

Compensatory actions are governed by PMP-4030-EIS-001, Event-Initiated Surveillance Testing

Instrument	CHANNEL CHECK	SOURCE CHECK	CHANNEL CALIBRATION	CHANNEL OPERATIONAL TEST
1. Gross Radioactivity Monitors Providing Automatic Release Termination				
a. Liquid Radwaste Effluent Line (RRS-1001)	D*	P	B(3)	Q(5)
b. Steam Generator Blowdown Effluent Line	D*	M	B(3)	Q(1)
c. Steam Generator Blowdown Treatment Effluent Line	D*	M	B(3)	Q(1)
2. Gross Radioactivity Monitors Not Providing Automatic Release Termination				
a. Service Water System Effluent Line	D	M	B(3)	Q(2)
3. Continuous Composite Samplers				
a. Turbine Building Sump Effluent Line	D*	N/A	N/A	N/A
4. Flow Rate Measurement Devices				
a. Liquid Radwaste Effluent	D(4)*	N/A	B	Q
b. Steam Generator Blowdown Treatment Line	D(4)*	N/A	N/A	N/A

* During releases via this pathway. This is applicable to all surveillances for the appropriate monitor.

TABLE NOTATION

1. Demonstrate with the CHANNEL OPERATIONAL TEST that automatic isolation of this pathway and control room alarm annunciation occurs if any of the following conditions exists:
   1. Instrument indicates measured levels above the alarm/trip setpoint.
   2. Circuit failure.*
   3. Instrument indicates a downscale failure.*
   4. Instrument control not set in operating mode.*
   5. Loss of sample flow. *

2. Demonstrate with the CHANNEL OPERATIONAL TEST that control room alarm annunciation occurs if any of the following conditions exists:
   1. Instrument indicates measured levels above the alarm setpoint.
   2. Circuit failure.
   3. Instrument indicates a downscale failure.
   4. Instrument controls not set in operating mode.

3. Perform the initial CHANNEL CALIBRATION using one or more sources with traceability back to the National Institute of Standards and Technology (NIST). These sources permit calibrating the system over its intended range of energy and measurement range. For subsequent CHANNEL CALIBRATION, sources that have been related to the initial calibration may be used.

4. Verify indication of flow during periods of release with the CHANNEL CHECK. Perform the CHANNEL CHECK at least once per 24 hours on days on which continuous, periodic or batch releases are made.

5. Demonstrate with the CHANNEL OPERATIONAL TEST that automatic isolation of this pathway and control room alarm annunciation occurs if any of the following conditions exists:
   1. Instrument indicates measured levels above the alarm/trip setpoint.
   2. Circuit failure.**
   3. Instrument indicates a downscale failure.**
   4. Instrument control not set in operating mode.*
   5. Loss of sample flow.

* Instrument indicates, but does not provide for automatic isolation

** Instrument indicates, but does not necessarily cause automatic isolation. No credit is taken for the automatic isolation on such occurrences.

Operations currently performs the routine channel checks and source checks. Maintenance and Radiation Protection perform channel calibrations and channel operational tests. Chemistry performs the channel check on the continuous composite sampler. These responsibilities are subject to change without revision to this document.

Instrument (Instrument #)	Operable[1]	Minimum Channels Action	Action
1. Condenser Evacuation System			
a. Noble Gas Activity Monitor (SRA-1905/2905)	(1)	****	6
b. Flow Rate Monitor (SFR-401 and 1/2-MR-054) OR (SFR-401 and SRA-1910/2910) OR (SFR-402 and 1/2-MR-054)	(1)	****	5
2. Unit Vent. Auxiliary Building Ventilation System			
a. Noble Gas Activity Monitor (VRS-1505/2505)	(1)	*	6
b. Iodine Sampler Cartridge for VRA-1503/2503	(1)	*	8
c. Particulate Sampler Filter for VRA-1501/2501	(1)	*	8
d. Effluent System Flow Rate Measuring Device (VFR-315 and 1/2-MR-054) OR (VFR-315 and VFR-1510/2510)	(1)	*	5
e. Sampler Flow Rate Measuring Device (VFS-1521/2521)	(1)	*	5
3. Containment Purge and Containment Pressure Relief (Vent) **			
a. Containment Noble Gas Activity Monitor ERS-1305/1405 (ERS-2305/2405)	(1)	****[2, 3]	7
b. Containment Particulate Sampler Filter ERS-1301/1401 (ERS-2301/2401)	(1)	****	10
4. Waste Gas Holdup System and CVCS HUT (Batch releases)**			
a. Noble Gas Activity Alarm and Termination of Waste Gas Releases (VRS-1505/2505)	(1)	****[4]	9
5. Gland Seal Exhaust			
a. Noble Gas Activity Monitor (SRA-1805/2805)	(1)	****	6
b. Flow Rate Monitor (SFR-201 and 1/2-MR-54) OR (SFR-201 and SFR-1810/2810)	(1)	****	5

* At all times

** Containment Purge and other identified gaseous batch releases can be released utilizing the same double sampling compensatory action requirements of action 9 identified here even if there is no termination function associated with it like that associated with the two specific tank types listed here.

**** During releases via this pathway

TABLE NOTATIONS

1. **IF** an RMS monitor is inoperable solely as the result of the loss of it's control room alarm annunciation, **THEN** one of the following actions is acceptable to satisfy the ODCM action statement compensatory surveillance requirement:

   1. Take grab samples and conduct laboratory analyses per the specific monitor's action statement,
      -OR-
   2. Take local monitor readings at a frequency equal to or greater than (more frequently than) the action frequency.

   IF the RMS monitor is inoperable for reasons other than the loss of control room annunciation, **THEN** the only acceptable action is taking grab samples and conducting laboratory analyses as the reading is equivalent to a grab sample when the monitor is functional.

2. Consider releases as occurring "via this pathway" under the following conditions:

   - The Containment Purge System is in operation and Containment Operability is applicable,
     -OR-
   - The Containment Purge System is in operation and the 'Clean-up' batch release of the Containment air volume has not been fully completed.

   IF neither of the above are applicable **AND** the unit is in Mode 5 or 6, **THEN** the containment purge system is acting as a ventilation system (an extension of the Auxiliary Building) and is covered by Item 2 of this Attachment. This is called 'Ventilation Mode'. 'Ventilate Mode' cannot be entered without performing a Clean-up batch release.

   -OR-
   - A Containment Pressure Relief (CPR) is being performed.

   Once the 'Clean-up' batch release has been completed and 'Ventilation' mode of Purge has commenced – resultant return to 'Clean-up' mode can be made with no additional sampling requirements or paperwork – so long as either ERS-1305/2305 **OR** ERS-1405/2405 are operable. Containment particulate channels are not needed once the RCS has entered Mode 5 per Technical Specification 3.4.15.

3. For purge (including pressure relief) purposes only. Reference TS 3.3.6, Containment Purge Supply and Exhaust System Isolation Instrumentation and 3.4.15, RCS Leakage Detection Instrumentation for additional information.

4. For waste gas releases only, see Item 2 (Unit Vent, Auxiliary Building Ventilation System) for additional requirements.

ACTIONS

5. With the number of channels OPERABLE less than required by the Minimum Channels OPERABLE requirement, effluent releases via this pathway may continue for up to 30 days provided the flow rate is estimated at least once per 4 hours. After 30 days, **IF** the channels are not OPERABLE, **THEN** continue releases with estimation of the flow rate once per 4 hours and provide a description of why the inoperability was not corrected in the next Annual Radiological Effluent Release Report.

6. With the number of channels OPERABLE less required by the Minimum Channels OPERABLE requirement, effluent releases via this pathway may continue for up to 30 days provided grab samples are taken at least once per shift and these samples are analyzed for gross activity within 24 hours. After 30 days, **IF** the channels are not OPERABLE, **THEN** continue releases with grab samples once per shift and provide a description of why the inoperability was not corrected in the next Annual Radiological Effluent release Report.

7. With the number of channels OPERABLE less than required by the Minimum Channels OPERABLE requirements, immediately suspend PURGING or VENTING (CPR) of radioactive effluents via this pathway.

8. With the number of channels OPERABLE less than required by the Minimum Channels OPERABLE requirement, effluent releases via the affected pathway may continue for up to 30 days provided samples required for weekly Iodine & Particulates analysis are continuously collected with auxiliary sampling equipment as required in Attachment 3.7, Radioactive Gaseous Waste Sampling and Analysis Program. After 30 days, **IF** the channels are not OPERABLE, **THEN** continue releases with sample collection by auxiliary sampling equipment and provide a description of why the inoperability was not corrected in the next Annual Radiological Effluent Release Report.

   Sampling evolutions are not an interruption of a continuous release or sampling period.

9. With the number of channels OPERABLE less than required by the Minimum Channels OPERABLE requirement, the contents of the tank(s) may be released to the environment for up to 14 days provided that prior to initiating the release:

   a. At least two independent samples of the tank's contents are analyzed and,
   b. At least two technically qualified members of the Facility Staff independently verify the release rate calculations and discharge valve lineups; otherwise, suspend release of radioactive effluents via this pathway.

   After 14 days, **IF** the channels are not OPERABLE, **THEN** continue releases with sample collection by auxiliary sampling equipment and provide a description of why the inoperability was not corrected in the next Annual Radiological Effluent Release Report

10. Technical Specification 3.4.15, RCS Leakage Detection System Instrumentation.

Compensatory actions are governed by PMP-4030-EIS-001, Event-Initiated Surveillance Testing.

Instrument	CHANNEL CHECK	SOURCE CHECK	CHANNEL CALIBRATION	CHANNEL OPERATIONAL TEST
1. Condenser Evacuation System	Alarm Only			
a. Noble Gas Activity Monitor (SRA-1905/2905)	D**	M	B(2)	Q(1)
b. System Effluent Flow Rate (SFR-401, SFR-402, MR-054, SRA-1910/2910)	D**	NA	B	Q
2. Auxiliary Building Unit Ventilation System	Alarm Only			
a. Noble Gas Activity Monitor (VRS-1505/2505)	D*	M	B(2)	Q(1)
b. Iodine Sampler (For VRA-1503/2503)	W*	NA	NA	NA
c. Particulate Sampler (For VRA-1501/2501)	W*	NA	NA	NA
d. System Effluent Flow Rate Measurement Device (VFR-315, MR-054, VRS-1510/2510)	D*	NA	B	Q
e. Sampler Flow Rate Measuring Device (VFS-1521/2521)	D*	N/A	B	Q
3. Containment Purge System and Containment Pressure Relief	Alarm and Trip			
a. Containment Noble Gas Activity Monitor (ERS-13/1405 and ERS-23/2405)	S	P	B(2)	Q
b. Containment Particulate Sampler (ERS-13/1401 and ERS-23/2401)	S	NA	B	Q
4. Waste Gas Holdup System Including CVCS HUT	Alarm and Trip			
a. Noble Gas Activity Monitor Providing Alarm and Termination (VRS-1505/2505)	P	P	B(2)	Q(3)
5. Gland Seal Exhaust	Alarm Only			
a. Noble Gas Activity (SRA-1805/2805)	D**	M	B(2)	Q(1)
b. System Effluent Flow Rate (SFR-201, MR-054, SRA-1810/2810)	D**	NA	B	Q

* At all times

** During releases via this pathway. This is applicable to all surveillances for the appropriate monitor.

TABLE NOTATIONS

1. Demonstrate with the CHANNEL OPERATIONAL TEST that control room alarm annunciation occurs if any of the following conditions exists:
   1. Instrument indicates measured levels above the alarm setpoint.
   2. Circuit failure.
   3. Instrument indicates a downscale failure.
   4. Instrument controls not set in operate mode.
2. Perform the initial CHANNEL CALIBRATION using one or more sources with traceability back to the NIST. These sources permit calibrating the system over its intended range of energy and measurement range. For subsequent CHANNEL CALIBRATION, sources that have been related to the initial calibration may be used.
3. Demonstrate with the CHANNEL OPERATIONAL TEST that automatic isolation of this pathway and control room alarm annunciation occurs if any of the following conditions exists:
   1. Instrument indicates measured levels above the alarm/trip setpoint.
   2. Circuit failure.*
   3. Instrument indicates a downscale failure.*
   4. Instrument controls not set in operate mode.*

* Instrument indicates, but does not provide automatic isolation.

Operations currently performs the routine channel checks, and source checks. Maintenance and Radiation Protection perform channel calibrations and channel operational tests. These responsibilities are subject to change without revision to this document.

[Ref. 5.2.1t]

LIQUID RELEASE TYPE	SAMPLING FREQUENCY	MINIMUM ANALYSIS FREQUENCY	TYPE OF ACTIVITY ANALYSIS	LOWER LIMIT OF DETECTION (LLD) (μCi/ml) [a]
A. Batch Waste Release Tanks [c]	P Each Batch	P Each Batch	Principal Gamma Emitters [e]	$5x10^{-7}$
			I-131	$1x10^{-6}$
	P Each Batch	P Each Batch	Dissolved and Entrained Gases (Gamma Emitters)	$1x10^{-5}$
	P Each Batch	M Composite [b]	H-3	$1x10^{-5}$
			Gross Alpha	$1x10^{-7}$
	P Each Batch	Q Composite [b]	Sr-89, Sr-90	$5x10^{-8}$
			Fe-55	$1x10^{-6}$
B. Plant Continuous Releases* [d]	Daily	W Composite [b]	Principal Gamma Emitters [e]	$5x10^{-7}$
			I-131	$1x10^{-6}$
	M Grab Sample	M	Dissolved and Entrained Gases (Gamma Emitters)	$1x10^{-5}$
	Daily	M Composite [b]	H-3	$1x10^{-5}$
			Gross Alpha	$1x10^{-7}$
	Daily	Q Composite [b]	Sr-89, Sr-90	$5x10^{-8}$
			Fe-55	$1x10^{-6}$

*During releases via this pathway

This table provides the minimum requirements for the liquid sampling program. If additional sampling is performed then those sample results can be used to quantify releases in lieu of composite data for a more accurate quantification. Examples of these samples are the 72 hour secondary coolant activity and Monitor Tank tritium samples.

TABLE NOTATION

a. The lower limit of detection (LLD) is defined in Table Notation A. of Attachment 3.20, Maximum Values for Lower Limits of Detections[A,B] - REMP

b. A composite sample is one in which the quantity of liquid sampled is proportional to the quantity of liquid waste discharged and in which the method of sampling employed results in a specimen which is representative of the liquids released.

c. A batch release is the discharge of liquid wastes of a discrete volume. Prior to sampling for analysis, isolate, recirculate or sparge each batch to ensure thorough mixing. Examples of these are Monitor Tank and Steam Generator Drains. Before a batch is released the tank is sampled and analyzed to determine that it can be released without exceeding federal standards.

d. A continuous release is the discharge of liquid of a non-discrete volume; e.g. from a volume of system that has an input flow during the continuous release. This type of release includes the Turbine Room Sump, Steam Generator Blowdown and the Steam Generator Sampling System.

e. The principal gamma emitters for which the LLD specification applies exclusively are the following radionuclides: Mn-54, Fe-59, Co-58, Co-60, Zn-65, Mo-99, Cs-134, Cs-137, Ce-141 and Ce-144. This list does not mean that only these nuclides are to be detected and reported. Identify and report other peaks, which are measurable and identifiable, together with the above nuclides.

Gaseous Release Type	Frequency	Minimum Analysis Frequency	Type of Activity Analysis	Lower Limit of Detection (μCi/cc) [a]
a. Waste Gas Storage Tanks and CVCS HUTs	**P** Each Tank Grab Sample	**P** Each Tank	Principal Gamma Emitters [d]	1×10^{-4}
			H-3	1×10^{-6}
b. Containment Purge	**P** Each Purge Grab Sample	**P** Each Purge	Principal Gamma Emitters [d]	1×10^{-4}
CPR (vent)**	Twice per Month	Twice per Month		
			H-3	1×10^{-6}
c. Condenser Evacuation System Gland Seal Exhaust* [i]	**W** or **M** Grab Sample	**M** Particulate Sample	Principal Gamma Emitters [d]	1×10^{-11}
		M	H-3	1×10^{-6}
		W [g] Noble Gas	Principle Gamma Emitters [d]	1×10^{-4}
		M Iodine Adsorbing Media	I-131	1×10^{-12}
	Continuous	**W** [g] Noble Gas Monitor	Noble Gases	1×10^{-6}
d. Auxiliary Building Unit Vent*	Continuous [c]	**W** [b] Iodine Adsorbing Media	I-131	1×10^{-12}
	Continuous [c]	**W** [b] Particulate Sample	Principal Gamma Emitters [d]	1×10^{-11}
	Continuous [c]	**M** Composite Particulate Sample	Gross Alpha	1×10^{-11}
	W Grab Sample	**W** [h] H-3 Sample	H-3	1×10^{-6}
		W [gj] Noble Gas	Principle Gamma Emitters [d]	1×10^{-4}
	Continuous [c]	**Q** Composite Particulate Sample	Sr-89, Sr-90	1×10^{-11}
	Continuous [c]	Noble Gas Monitor	Noble Gases	1×10^{-6}
e. Incinerated Oil [e]	**P** Each Batch [f]	**P** Each Batch [f]	Principal Gamma Emitters [d]	5×10^{-7}

*During releases via this pathway

**Only a twice per month sampling program for containment noble gases and H_3 is required

This table provides the minimum requirements for the gaseous sampling program. If additional sampling is performed then those sample results can be used to quantify releases in lieu of composite data for a more accurate quantification. Examples of these samples are verification or compensatory action sample results.

TABLE NOTATION

a. The lower limit of detection (LLD) is defined in Table Notation A. of Attachment 3.20, Maximum Values for Lower Limits of Detections[A,B] - REMP

b. Change samples at least once per 7 days and complete analyses within 48 hours after changing. Perform analyses at least once per 24 hours for 7 days following each shutdown, startup or THERMAL POWER change greater than 15% per hour of RATED THERMAL POWER. WHEN samples collected for 24 hours are analyzed, THEN the corresponding LLDs may be increased by a factor of 10. This requirement does not apply IF (1) analysis shows that DOSEQ I131 concentration in the RCS has not increased more than a factor of 3; and (2) the noble gas monitor shows that effluent activity has not increased more than a factor of 3. IF the daily sample requirement has been entered, THEN it can be exited early once both the radiation monitor reading and the RCS DOSEQ I131 levels have returned to within the factor of 3 of the pre-event 'normal'.[Ref. 5.2.1z]

c. Know the ratio of the sample flow rate to the sampled stream flow rate for the time period covered by each dose or dose rate calculation made in accordance with steps 3.2.4a, 3.2.4b, and 3.2.4c of this document.

   Sampling evolutions or momentary interruptions to maintain sampling capability are not an interruption of a continuous release or sampling period.

d. The principal gamma emitters for which the LLD specification applies exclusively are the following radionuclides: Kr-87, Kr-88, Xe-133, Xe-133M, Xe-135 and Xe-138 for gaseous emissions and Mn-54, Fe-59, Co-58, Co-60, Zn-65, Mo-99, Cs-134, Cs-137, Ce-141 and Ce-144 for particulate emissions. This list does not mean that only these nuclides are to be detected and reported. Identify and report other peaks, which are measurable and identifiable, together with the above nuclides.

e. Releases from incinerated oil are discharged through the Auxiliary Boiler System. Account for releases based on pre-release grab sample data.

f. Collect samples of waste oil to be incinerated from the container in which the waste oil is stored (example: waste oil storage tanks, 55 gal. drums) prior to transfer to the Auxiliary Boiler System. Ensure samples are representative of container contents.

g. Obtain and analyze a gas marinelli grab sample weekly for noble gases effluent quantification.

h. Take tritium grab samples at least once per 24 hours when the refueling cavity is flooded.

i. Grab sampling of the Gland Seal Exhaust pathway need not be performed if the RMS low range channel (SRA-1805/2805) readings are less than 1E-6 μC/cc. Attach the RMS daily averages in lieu of sampling. This is based on operating experience indicating no activity is detected in the Gland Seal Exhaust below this value. Compensatory sampling for out of service monitor is still required in the event 1805/2805 is inoperable.

j. Sampling and analysis shall also be performed following shutdown, startup or THERMAL POWER change exceeding 15% of RATED THERMAL POWER within a one hour period. This noble gas sample shall be performed within four hours of the event. Evaluation of the sample results, based on previous samples, will be performed to determine if any further sampling is necessary.

Liquid Factors		
Monitor Description	Monitor Number	MRP #
U 1 SG Blowdown	1R19/24, DRS 3100/3200*	0.35
U 2 SG Blowdown	2R19/24, DRS 4100/4200*	0.35
U 1 & 2 Liquid Waste Discharge	RRS-1000	0.30

Sources of radioactivity released from the Turbine Room Sump (TRS) typically originate from the secondary cycle which is already being monitored by instrumentation that utilizes multiple release point (MRP) factors. The MRP is an administrative value that is used to assist with maintaining releases ALARA. The TRS has no actual radiation monitor, but utilizes an automatic compositor for monitoring what has been released. The batch release path, through RRS-1000, is the predominant release path by several magnitudes. Tritium is the predominant radionuclide released from the site and the radiation monitors do not respond to this low energy beta emitter. Based on this information and the large degree of conservatism built into the radiation monitor setpoint methodology it does not appear to warrant further reduction for the TRS release path since its source is predominantly the secondary cycle which is adequately covered by this factor.

Gaseous Factors			
Monitor Description	Monitor Number	Flow Rate (cfm)	MRP #
Unit 1			
Unit Vent	VRS-1500	186,600	0.54
Gland Seal Vent	SRA-1800	1,260	0.00363
Steam Jet Air Ejector	SRA-1900	3,600 (b)	0.01
Start Up FT Vent		1,536	0.004
Total		192,996	
Unit 2			
Unit Vent	VRS-2500	143,400	0.41
Gland Seal Vent	SRA-2800	5,508 (a)	0.02
Steam Jet Air Ejector	SRA-2900	3,600 (b)	0.01
Start Up FT Vent		1,536	0.004
Total		154,044	

* Either R-19, 24, DRS 3/4100 or 3/4200 can be used for blowdown monitoring as the Eberline monitors (DRS) are replacing the Westinghouse I monitors.

\# Nominal Values

a Two release points of 2,754 cfm each are totaled for this value.

B This is the total design maximum of the Start Up Air Ejectors. This is a conservative value for unit 1.

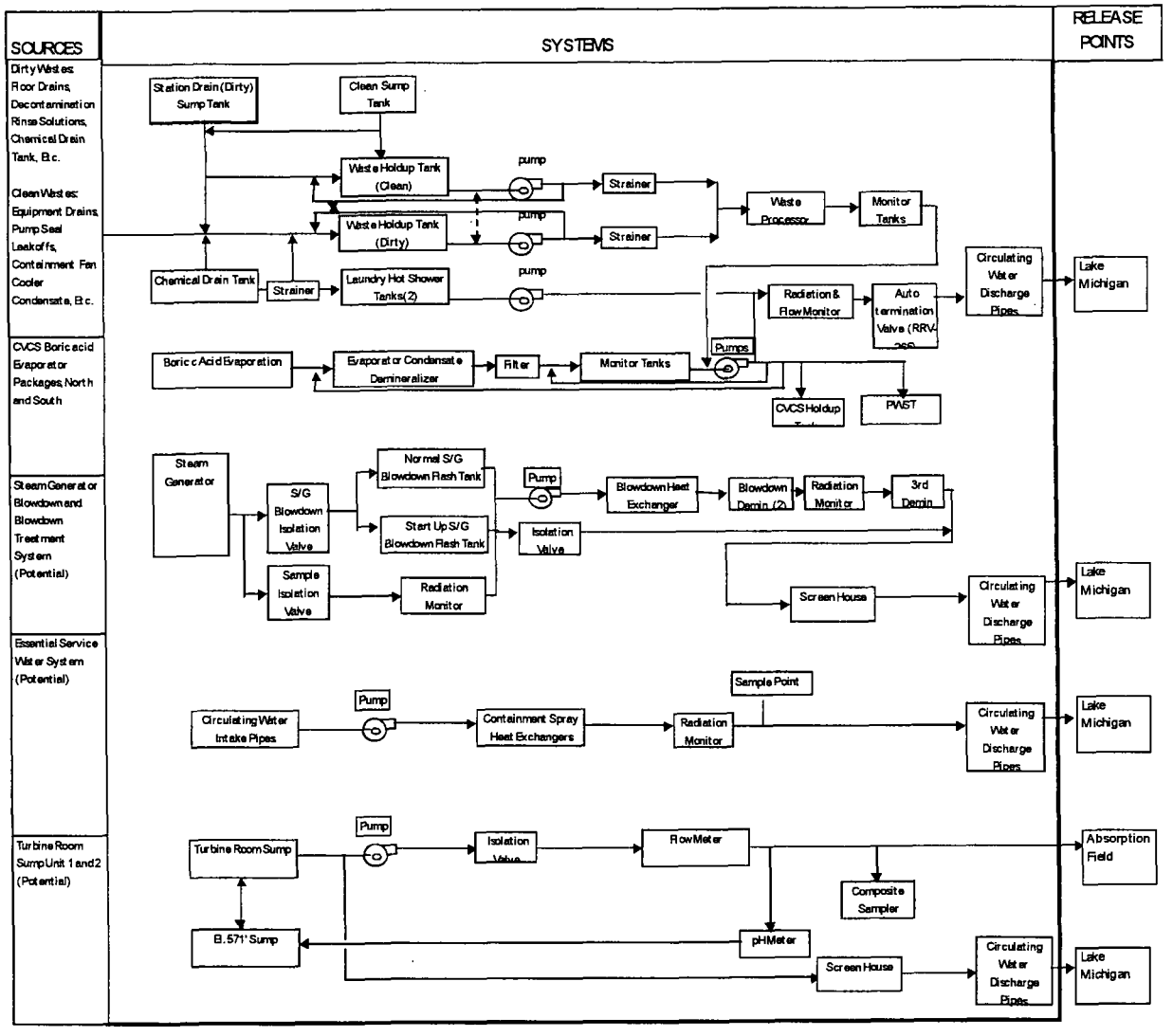
SOURCES
SYSTEMS
RELEASE POINTS
Dirty Wastes: Floor Drains, Decontamination Rinse Solutions, Chemical Drain Tank, Etc.
Clean Wastes: Equipment Drains, Pump Seal Leakoffs, Containment Fan Cooler Condensate, Etc.
CVCS Boric acid Evaporator Packages, North and South
Steam Generator Blowdown and Blowdown Treatment System (Potential)
Essential Service Water System (Potential)
Turbine Room Sump Unit 1 and 2 (Potential)
Station Drain (Dirty) Sump Tank
Clean Sump Tank
Waste Holdup Tank (Clean)
Waste Holdup Tank (Dirty)
pump
Strainer
Waste Processor
Monitor Tanks
Chemical Drain Tank
Laundry Hot Shower Tanks(2)
Radiation & Flow Monitor
Auto termination Valve (RRV-
Circulating Water Discharge Pipes
Lake Michigan
Boric Acid Evaporation
Evaporator Condensate Demineralizer
Filter
Pumps
CVCS Holdup
PWST
Steam Generator
S/G Blowdown Isolation Valve
Normal S/G Blowdown Flash Tank
Start Up S/G Blowdown Flash Tank
Pump
Blowdown Heat Exchanger
Blowdown Demin. (2)
Radiation Monitor
3rd Demin
Isolation Valve
Sample Isolation Valve
Screen House
Circulating Water Intake Pipes
Containment Spray Heat Exchangers
Sample Point
Turbine Room Sump
Isolation Valve
Flow Meter
Absorption Field
Composite Sampler
El. 571' Sump
pH Meter

SYSTEM	COMPONENTS		CAPACITY	FLOW RATE
	TANKS	PUMPS	(EACH)	(EACH)*
I Waste Disposal System				
+ Chemical Drain Tank	1	1	600 GAL.	20 GPM
+ Laundry & Hot Shower Tanks	2	1	600 GAL.	20 GPM
+ Monitor Tanks	4	2	21,600 GAL.	150 GPM
+ Waste Holdup Tanks	2		25,000 GAL.	
+ Waste Evaporators	3			30 GPM
+ Waste Evaporator Condensate Tanks	2	2	6,450 GAL	150 GPM
II Steam Generator Blowdown and Blowdown Treatment Systems				
+ Start-up Flash Tank (Vented)#	1		1,800 GAL.	580 GPM
+ Normal Flash Tank (Not Vented)	1		525 GAL.	100 GPM
+ Blowdown Treatment System		1		60 GPM
III Essential Service Water System				
+ Water Pumps		4		10,000 GPM
+ Containment Spray Heat Exchanger Outlet	4			3,300 GPM
IV Circulating Water Pumps				
Unit 1		3		230,000 GPM
Unit 2		4		230,000 GPM

* Nominal Values

\# The 580 gpm value is calculated from the Estimated Steam Generator Blowdown Flow vs. DRV Valve Position letter prepared by M. J. O'Keefe, dated 9/27/93. This is 830 gpm times the 70% that remains as liquid while the other 30% flashes to steam and exhausts out the flash tank vent.

This includes the following monitors: RRS-1000, DRS 3100, DRS 3200, DRS 4100, and DRS 4200. [Ref. 5.2.1q]

NUCLIDE	EFFICIENCY (cpm/µCi/cc)
I-131	3.78 E7
Cs-137	3.00 E7
Cs-134	7.93 E7
Co-60	5.75 E7
Co-58	4.58 E7
Cr-51	3.60 E6
Mn-54	3.30 E7
Zn-65	1.58 E7
Ag-110M	9.93 E7
Ba-133	4.85 E7
Ba-140	1.92 E7
Cd-109	9.58 E5
Ce-139	3.28 E7
Ce-141	1.92 E8
Ce-144	4.83 E6
Co-57	3.80 E7
Cs-136	1.07 E8
Fe-59	2.83 E7
Sb-124	5.93 E7
I-133	3.40 E7
I-134	7.23 E7
I-135	3.95 E7
Mo-99	8.68 E6
Na-24	4.45 E7
Nb-95	3.28 E7
Nb-97	3.50 E7
Rb-89	5.00 E7
Ru-103	3.48 E7
Ru-106	1.23 E7
Sb-122	2.55 E7
Sb-125	3.15 E7
Sn-113	7.33 E5
Sr-85	3.70 E7
Sr-89	2.88 E3
Sr-92	3.67 E7
Tc-99M	3.60 E7
Y-88	5.25 E7
Zr-95	3.38 E7
Zr-97	3.10 E7
Kr-85	1.56 E5
Kr-85M	3.53 E7
Kr-88	4.10 E7
Xe-131M	8.15 E5
Xe-133	7.78 E6
Xe-133M	5.75 E6
Xe-135	3.83 E7

Counting Efficiency Curve for R-19

Efficiency Factor = 4.2 E6 cpm/uCi/ml

(Based on empirical data taken during pre-operational testing with Cs-137)

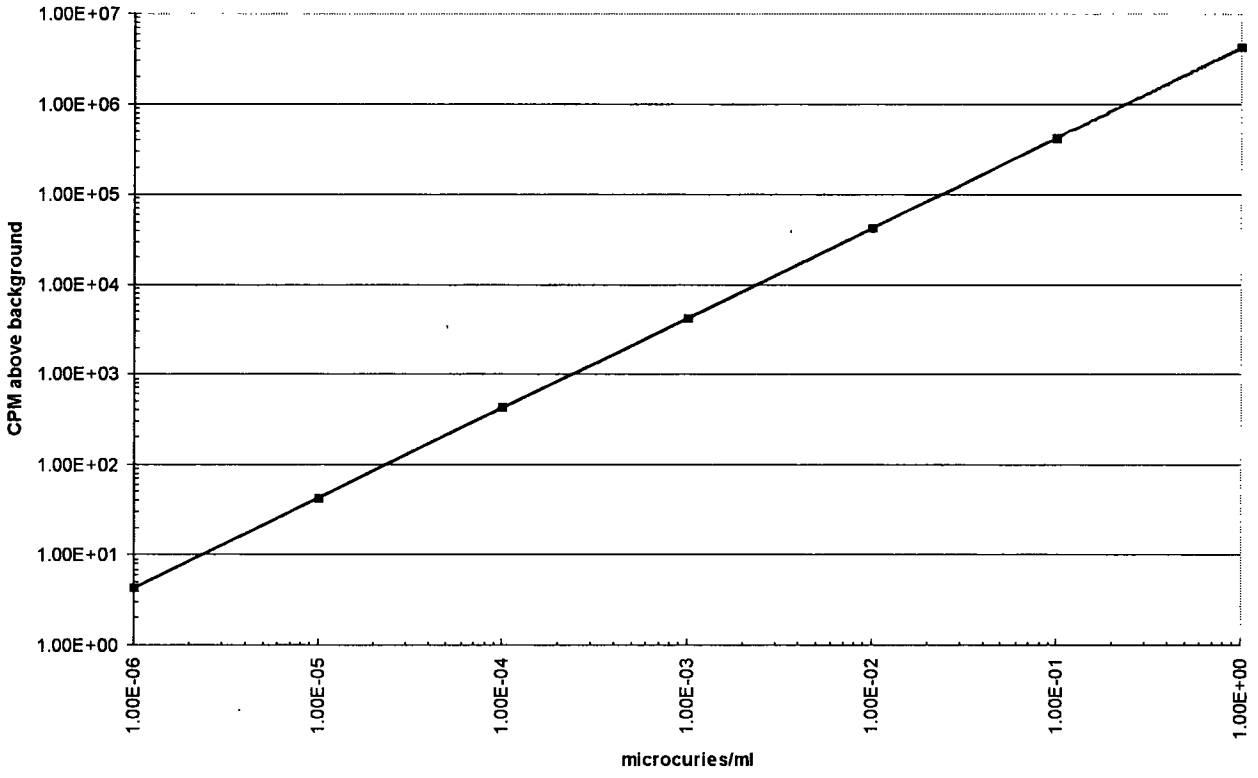

Counting Efficiency Curve for R-24

Efficiency Factor = 7.5E6 cpm/uCi/ml

(Based on empirical data taken during pre-operational testing with Mn-54)

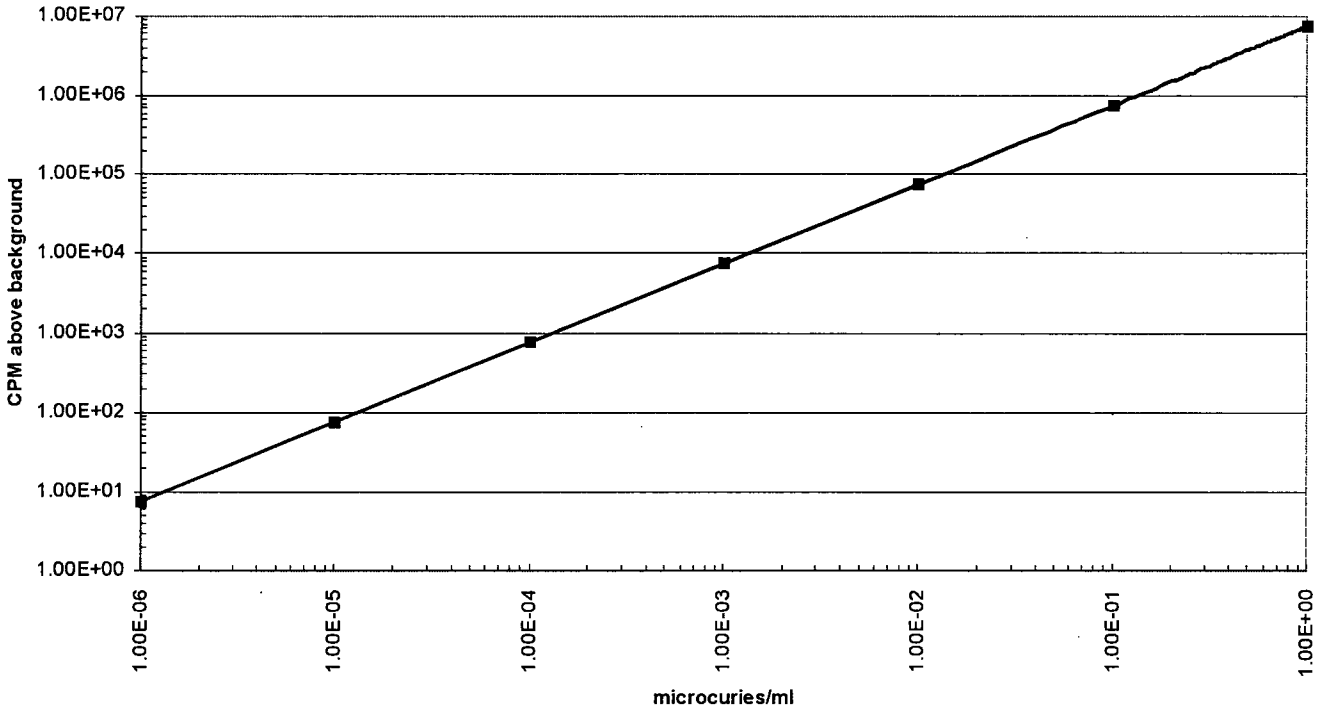

Counting Efficiency Curve for R-20 and R-28

Efficiency Factor = 4.3 E6 cpm/uCi/ml

(Based on empirical data taken during pre-operational testing with Co-58)

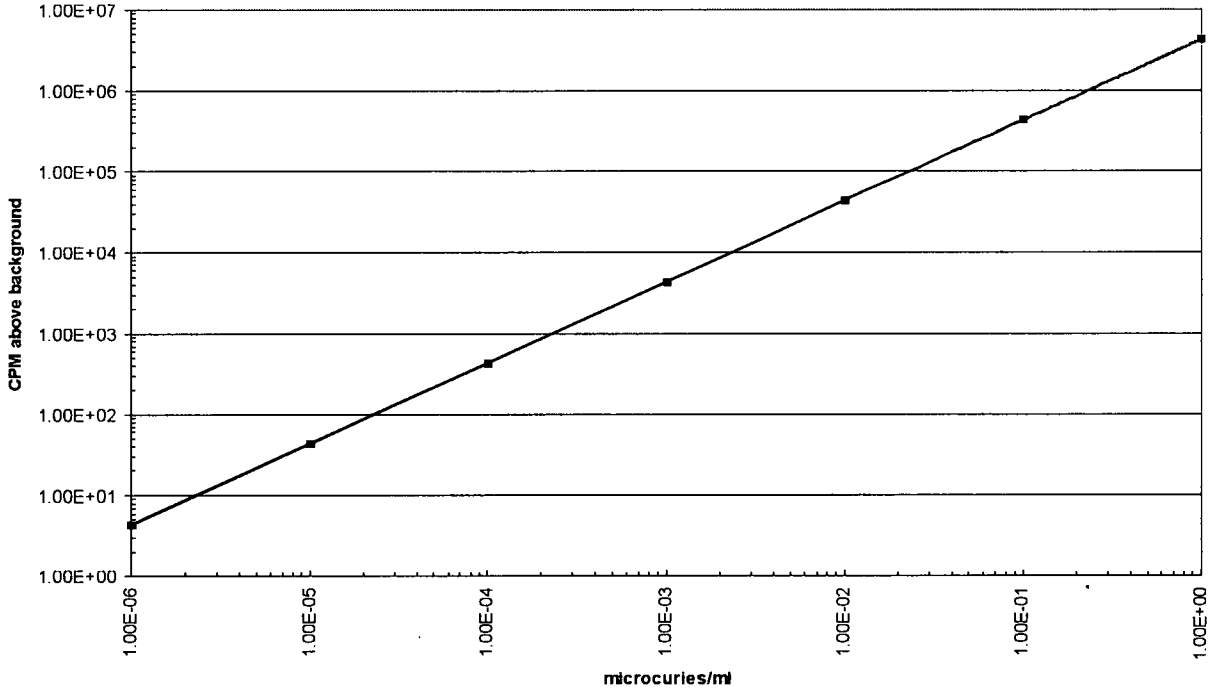

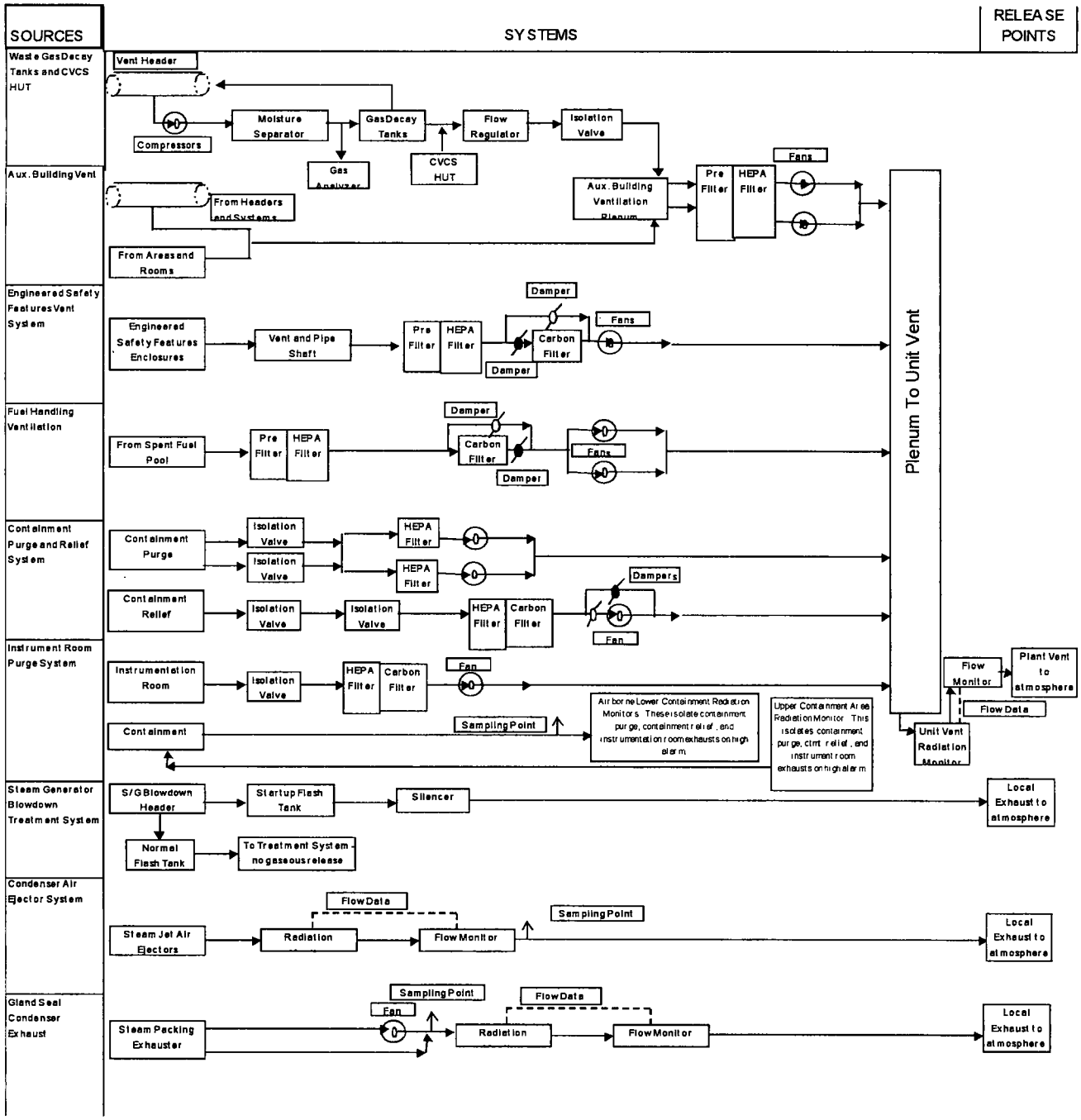
SOURCES
SYSTEMS
RELEASE POINTS
Waste Gas Decay Tanks and CVCS HUT
Vent Header
Compressors
Moisture Separator
Gas Decay Tanks
Flow Regulator
Isolation Valve
Gas Analyzer
CVCS HUT
Aux. Building Vent
From Headers and Systems
From Areas and Rooms
Aux. Building Ventilation Plenum
Pre Filter
HEPA Filter
Fans
Engineered Safety Features Vent System
Engineered Safety Features Enclosures
Vent and Pipe Shaft
Damper
Carbon Filter
Fuel Handling Ventilation
From Spent Fuel Pool
Containment Purge and Relief System
Containment Purge
Containment Relief
Dampers
Fan
Instrument Room Purge System
Instrumentation Room
Containment
Sampling Point
Airborne Lower Containment Radiation Monitors. These isolate containment purge, containment relief, and instrumentation room exhausts on high alarm.
Upper Containment Area Radiation Monitor. This isolates containment purge, cont. relief, and instrument room exhausts on high alarm.
Plenum To Unit Vent
Flow Monitor
Plant Vent to atmosphere
Flow Data
Unit Vent Radiation Monitor
Steam Generator Blowdown Treatment System
S/G Blowdown Header
Startup Flash Tank
Silencer
Local Exhaust to atmosphere
Normal Flash Tank
To Treatment System - no gaseous release
Condenser Air Ejector System
Steam Jet Air Ejectors
Radiation
Gland Seal Condenser Exhaust
Steam Packing Exhauster

SYSTEM	UNIT	EXHAUST FLOW RATE (CFM)	CAPACITY
I PLANT AUXILIARY BUILDING UNIT VENT	1 2	186,600 max 143,400 max	
WASTE GAS DECAY TANKS (8) AND CHEMICAL & VOLUME CONTROL SYSTEM HOLD UP TANKS (3)	1	125	4082 FT^3 @100 psig 28,741 ft^3 max @ 8#, 0 level
+ AUXILIARY BUILDING EXHAUST	1 2	72,660 59,400	
+ ENG. SAFETY FEATURES VENT	1 & 2	50,000	
+ FUEL HANDLING AREA VENT SYSTEM	1	30,000	
CONTAINMENT PURGE SYSTEM	1 & 2	32,000	
CONTAINMENT PRESSURE RELIEF SYSTEM	1 & 2	1,000	
INSTRUMENT ROOM PURGE SYSTEM	1 & 2	1,000	
II CONDENSER AIR EJECTOR SYSTEM			2 Release Points One for Each Unit
NORMAL STEAM JET AIR EJECTORS	1 & 2	230	
START UP STEAM JET AIR EJECTORS	1 & 2	3,600	
III TURBINE SEALS SYSTEM	1	1,260	
	2	5,508	2 Release Points for Unit 2
IV START UP FLASH TANK VENT	1	1,536	
	2	1,536	

+ Designates total flow for all fans.

$\overline{\chi/Q}$ GROUND AVERAGE (sec/m^3)

DIRECTION	DISTANCE (METERS)				
(WIND FROM)	594	2416	4020	5630	7240
N	4.17E-06	4.82E-07	2.25E-07	1.33E-07	9.32E-08
NNE	3.02E-06	3.64E-07	1.73E-07	1.04E-07	7.29E-08
NE	4.54E-06	5.31E-07	2.60E-07	1.59E-07	1.13E-07
ENE	7.16E-06	7.99E-07	4.04E-07	2.52E-07	1.80E-07
E	1.04E-05	1.13E-06	5.82E-07	3.66E-07	2.63E-07
ESE	1.07E-05	1.18E-06	6.04E-07	3.78E-07	2.72E-07
SE	1.15E-05	1.24E-06	6.36E-07	4.00E-07	2.88E-07
SSE	1.30E-05	1.42E-06	7.27E-07	4.57E-07	3.29E-07
S	1.41E-05	1.57E-06	7.92E-07	4.93E-07	3.54E-07
SSW	7.03E-06	7.81E-07	3.90E-07	2.41E-07	1.72E-07
SW	4.12E-06	4.73E-07	2.28E-07	1.38E-07	9.73E-08
WSW	3.29E-06	3.65E-07	1.76E-07	1.06E-07	7.52E-08
W	3.63E-06	4.11E-07	1.96E-07	1.18E-07	8.31E-08
WNW	3.02E-06	3.43E-07	1.61E-07	9.59E-08	6.71E-08
NW	3.22E-06	3.61E-07	1.71E-07	1.02E-07	7.16E-08
NNW	3.84E-06	4.29E-07	2.02E-07	1.20E-07	8.40E-08

DIRECTION	DISTANCE (METERS)				
(WIND FROM)	12067	24135	40225	56315	80500
N	4.64E-08	1.79E-08	8.89E-09	5.68E-09	3.56E-09
NNE	3.66E-08	1.43E-08	7.13E-09	4.56E-09	2.87E-09
NE	5.75E-08	2.30E-08	1.15E-08	7.41E-09	4.72E-09
ENE	9.30E-08	3.80E-08	1.91E-08	1.23E-08	7.90E-09
E	1.37E-07	5.65E-08	2.85E-08	1.83E-08	1.18E-08
ESE	1.41E-07	5.81E-08	2.93E-08	1.88E-08	1.22E-08
SE	1.50E-07	6.20E-08	3.12E-08	2.01E-08	1.30E-08
SSE	1.71E-07	7.06E-08	3.56E-08	2.29E-08	1.48E-08
S	1.84E-07	7.49E-08	3.77E-08	2.43E-08	1.56E-08
SSW	8.86E-08	3.59E-08	1.80E-08	1.15E-08	7.39E-09
SW	4.93E-08	1.96E-08	9.77E-09	6.27E-09	3.98E-09
WSW	3.80E-08	1.51E-08	7.53E-09	4.83E-09	3.07E-09
W	4.17E-08	1.64E-08	8.13E-09	5.20E-09	3.28E-09
WNW	3.34E-08	1.29E-08	6.41E-09	4.10E-09	2.57E-09
NW	3.57E-08	1.39E-08	6.89E-09	4.41E-09	2.77E-09
NNW	4.19E-08	3.35E-08	8.10E-09	5.19E-09	3.27E-09

DIRECTION TO - SECTOR			
N = A	E = E	S = J	W = N
NNE = B	ESE = F	SSW = K	WNW = P
NE = C	SE = G	SW = L	NW = Q
ENE = D	SSE = H	WSW = M	NNW = R

Worst Case $\overline{\chi/Q}$ = 2.04E-05 sec/m^3 in Sector H 2004

D/Q DEPOSITION ($1/m^2$)

DIRECTION	DISTANCE (METERS)				
(WIND FROM)	594	2416	4020	5630	7240
N	2.37E-08	2.29E-09	1.04E-09	5.44E-10	3.47E-10
NNE	9.86E-09	9.52E-10	4.32E-10	2.27E-10	1.45E-10
NE	1.29E-08	1.25E-09	5.67E-10	2.97E-10	1.90E-10
ENE	1.59E-08	1.54E-09	6.97E-10	3.66E-10	2.33E-10
E	1.87E-08	1.81E-09	8.20E-10	4.30E-10	2.75E-10
ESE	1.85E-08	1.79E-09	8.12E-10	4.26E-10	2.72E-10
SE	1.90E-08	1.83E-09	8.30E-10	4.36E-10	2.78E-10
SSE	2.40E-08	2.32E-09	1.05E-09	5.52E-10	3.52E-10
S	3.68E-08	3.56E-09	1.61E-09	8.46E-10	5.40E-10
SSW	2.30E-08	2.22E-09	1.01E-09	5.28E-10	3.37E-10
SW	2.22E-08	2.15E-09	9.74E-10	5.11E-10	3.26E-10
WSW	2.11E-08	2.04E-09	9.23E-10	4.84E-10	3.09E-10
W	2.00E-08	1.93E-09	8.74E-10	4.59E-10	2.93E-10
WNW	1.75E-08	1.69E-09	7.64E-10	4.01E-10	2.56E-10
NW	1.58E-08	1.53E-09	6.94E-10	3.64E-10	2.32E-10
NNW	2.30E-08	2.22E-09	1.01E-09	5.28E-10	3.37E-10

DIRECTION	DISTANCE (METERS)				
(WIND FROM)	12067	24135	40225	56315	80500
N	1.45E-10	4.72E-11	1.74E-11	9.27E-12	4.65E-12
NNE	6.36E-11	1.97E-11	7.24E-12	3.86E-12	1.94E-12
NE	8.07E-11	2.58E-11	9.51E-12	5.07E-12	2.54E-12
ENE	9.77E-11	3.17E-11	1.17E-11	6.23E-12	3.13E-12
E	1.14E-10	3.73E-11	1.37E-11	7.34E-12	3.68E-12
ESE	1.13E-10	3.70E-11	1.36E-11	7.26E-12	3.64E-12
SE	1.16E-10	3.78E-11	1.39E-11	7.42E-12	3.72E-12
SSE	1.47E-10	4.79E-11	1.76E-11	9.41E-12	4.72E-12
S	2.25E-10	7.34E-11	2.70E-11	1.44E-11	7.23E-12
SSW	1.41E-10	4.59E-11	1.69E-11	9.01E-12	4.52E-12
SW	1.36E-10	4.43E-11	1.63E-11	8.71E-12	4.37E-12
WSW	1.29E-10	4.20E-11	1.55E-11	8.26E-12	4.14E-12
W	1.22E-10	3.98E-11	1.47E-11	7.82E-12	3.92E-12
WNW	1.07E-10	3.48E-11	1.28E-11	6.84E-12	3.43E-12
NW	9.70E-11	3.16E-11	1.16E-11	6.20E-12	3.11E-12
NNW	1.41E-10	4.58E-11	1.69E-11	9.00E-12	4.52E-12

DIRECTION TO - SECTOR			
N = A	E = E	S = J	W = N
NNE = B	ESE = F	SSW = K	WNW = P
NE = C	SE = G	SW = L	NW = Q
ENE = D	SSE = H	WSW = M	NNW = R

Worst Case D/Q = 4.46E-08 $1/m^2$ in Sector A 2001

1. Performed or received annual update of $\overline{\chi/Q}$ and $\overline{D/Q}$ values. Provide a description of what has been received.

/

Signature Date

Environmental Department
(print name, title)

2. Worst $\overline{\chi/Q}$ and $\overline{D/Q}$ value and sector determined. PMP-6010-OSD-001 has been updated, if necessary. Provide an evaluation.

/

Signature Date

Environmental Department
(print name, title)

3. Review nuclide mix for gaseous and liquid release paths to determine if the dose conversion factor of total body is still applicable. Provide an evaluation.

/

Signature Date

Environmental Department
(print name, title)

4. Approved and verified by:

/

Signature Date

Environmental Department
(print name, title)

DOSE FACTORS FOR NOBLE GASES AND DAUGHTERS*

RADIONUCLIDE	TOTAL BODY DOSE FACTOR K_i (DFB_i) mrem m³ per μCi yr)	SKIN DOSE FACTOR L_i (DFS_i) (mrem m³ per μCi yr)	GAMMA AIR DOSE FACTOR M_i (DF^{γ}_i) (mrad m³ per μCi yr)	BETA AIR DOSE FACTOR N_i (DF^{β}_i) (mrad m³ per μCi yr)
Kr-83m	7.56E-02	- - -	1.93E+01	2.88E+02
Kr-85m	1.17E+03	1.46E+03	1.23E+03	1.97E+03
Kr-85	1.61E+01	1.34E+03	1.72E+01	1.95E+03
Kr-87	5.92E+03	9.73E+03	6.17E+03	1.03E+04
Kr-88	1.47E+04	2.37E+03	1.52E+04	2.93E+03
Kr-89	1.66E+04	1.01E+04	1.73E+04	1.06E+04
Kr-90	1.56E+04	7.29E+03	1.63E+04	7.83E+03
Xe-131m	9.15E+01	4.76E+02	1.56E+02	1.11E+03
Xe-133m	2.51E+02	9.94E+02	3.27E+02	1.48E+03
Xe-133	2.94E+02	3.06E+02	3.53E+02	1.05E+03
Xe-135m	3.12E+03	7.11E+02	3.36E+03	7.39E+02
Xe-135	1.81E+03	1.86E+03	1.92E+03	2.46E+03
Xe-137	1.42E+03	1.22E+04	1.51E+03	1.27E+04
Xe-138	8.83E+03	4.13E+03	9.21E+03	4.75E+03
Ar-41	8.84E+03	2.69E+03	9.30E+03	3.28E+03

* The listed dose factors are for radionuclides that may be detected in gaseous effluents, from Reg. Guide 1.109, Table B-1.

DOSE FACTORS FOR RADIOIODINES AND RADIOACTIVE PARTICULATE, IN GASEOUS EFFLUENTS FOR CHILD* Ref. 5.2.1ee and ff

RADIONUCLIDE	P_i INHALATION PATHWAY (mrem m³ per μCi yr)	P_i FOOD & GROUND PATHWAY (mrem m² sec per μCi yr)
H-3	1.12E+03	1.57E+03 #
P-32	2.60E+06	7.76E+10
Cr-51	1.70E+04	1.20E+07
Mn-54	1.58E+06	1.12E+09
Fe-59	1.27E+06	5.92E+08
Co-58	1.11E+06	5.97E+08
Co-60	7.07E+06	4.63E+09
Zn-65	9.95E+05	1.17E+10
Rb-86	1.98E+05	8.78E+09
Sr-89	2.16E+06	6.62E+09
Sr-90	1.01E+08	1.12E+11
Y-91	2.63E+06	6.72E+06
Zr-95	2.23E+06	3.44E+08
Nb-95	6.14E+05	4.24E+08
Ru-103	6.62E+05	1.55E+08
Ru-106	1.43E+07	3.01E+08
Ag-110m	5.48E+06	1.99E+10
I-131	1.62E+07	4.34E+11
I-132	1.94E+05	1.78E+06
I-133	3.85E+06	3.95E+09
I-135	7.92E+05	1.22E+07
Cs-134	1.01E+06	4.00E+10
Cs-136	1.71E+05	3.00E+09
Cs-137	9.07E+05	3.34E+10
Ba-140	1.74E+06	1.46E+08
Ce-141	5.44E+05	3.31E+07
Ce-144	1.20E+07	1.91E+08

*As Sr-90, Ru-106 and I-131 analyses are performed, THEN use P_i given in P-32 for nonlisted radionuclides.

The units for both H3 factors are the same, mrem m³ per μCi yr

[Ref. 5.2.1w, 5.2.1y, 5.2.1u]

SAMPLE STATION	DESCRIPTION/ LOCATION	SAMPLE TYPE	SAMPLE FREQUENCY	ANALYSIS TYPE	ANALYSIS FREQUENCY
ON-SITE AIRBORNE AND DIRECT RADIATION (TLD) STATIONS					
ONS-1 (T-1)	1945 ft @ 18° from Plant Axis	Airborne Particulate	Weekly	Gross Beta	Weekly
				Gamma Isotopic	Quart. Comp.
		Airborne Radioiodine		I-131	Weekly
		TLD	Quarterly	Direct Radiation	Quarterly
ONS-2 (T-2)	2338 ft @ 48° from Plant Axis	Airborne Particulate	Weekly	Gross Beta	Weekly
				Gamma Isotopic	Quart. Comp.
		Airborne Radioiodine		I-131	Weekly
		TLD	Quarterly	Direct Radiation	Quarterly
ONS-3 (T-3)	2407 ft @ 90° from Plant Axis	Airborne Particulate	Weekly	Gross Beta	Weekly
				Gamma Isotopic	Quart. Comp.
		Airborne Radioiodine		I-131	Weekly
		TLD	Quarterly	Direct Radiation	Quarterly
ONS-4 (T-4)	1852 ft. @ 118° from Plant Axis	Airborne Particulate	Weekly	Gross Beta	Weekly
				Gamma Isotopic	Quart. Comp.
		Airborne Radioiodine		I-131	Weekly
		TLD	Quarterly	Direct Radiation	Quarterly
ONS-5 (T-5)	1895 ft @ 189° from Plant Axis	Airborne Particulate	Weekly	Gross Beta	Weekly
				Gamma Isotopic	Quart. Comp.
		Airborne Radioiodine		I-131	Weekly
		TLD	Quarterly	Direct Radiation	Quarterly
ONS-6 (T-6)	1917 ft @ 210° from Plant Axis	Airborne Particulate	Weekly	Gross Beta	Weekly
				Gamma Isotopic	Quart. Comp.
		Airborne Radioiodine		I-131	Weekly
		TLD	Quarterly	Direct Radiation	Quarterly
T-7	2103 ft @ 36° from Plant Axis	TLD	Quarterly	Direct Radiation	Quarterly
T-8	2208 ft @ 82° from Plant Axis	TLD	Quarterly	Direct Radiation	Quarterly
T-9	1368 ft @ 149° from Plant Axis	TLD	Quarterly	Direct Radiation	Quarterly
T-10	1390 ft @ 127° from Plant Axis	TLD	Quarterly	Direct Radiation	Quarterly
T-11	1969 ft @ 11° from Plant Axis	TLD	Quarterly	Direct Radiation	Quarterly
T-12	2292 ft @ 63° from Plant Axis	TLD	Quarterly	Direct Radiation	Quarterly

CONTROL AIRBORNE AND DIRECT RADIATION (TLD) STATIONS					
NBF	15.6 miles SSW New Buffalo, MI	Airborne Particulate	Weekly	Gross Beta	Weekly
				Gamma Isotopic	Quart. Comp.
		Airborne Radioiodine		I-131	Weekly
		TLD	Quarterly	Direct Radiation	Quarterly
SBN	26.2 miles SE South Bend, IN	Airborne Particulate	Weekly	Gross Beta	Weekly
				Gamma Isotopic	Quart. Comp.
		Airborne Radioiodine		I-131	Weekly
		TLD	Quarterly	Direct Radiation	Quarterly
DOW	24.3 miles ENE Dowagiac, MI	Airborne Particulate	Weekly	Gross Beta	Weekly
				Gamma Isotopic	Quart. Comp.
		Airborne Radioiodine		I-131	Weekly
		TLD	Quarterly	Direct Radiation	Quarterly
COL	18.9 miles NNE Coloma, MI	Airborne Particulate	Weekly	Gross Beta	Weekly
				Gamma Isotopic	Quart. Comp.
		Airborne Radioiodine		I-131	Weekly
		TLD	Quarterly	Direct Radiation	Quarterly

SAMPLE STATION	DESCRIPTION/ LOCATION	SAMPLE TYPE	SAMPLE FREQUENCY	ANALYSIS TYPE	ANALYSIS FREQUENCY
OFF-SITE DIRECT RADIATION (TLD) STATIONS					
OFT-1	4.5 miles NE, Pole #B294-44	TLD	Quarterly	Direct Radiation	Quarterly
OFT-2	3.6 miles, NE, Stevensville Substation	TLD	Quarterly	Direct Radiation	Quarterly
OFT-3	5.1 miles NE, Pole #B296-13	TLD	Quarterly	Direct Radiation	Quarterly
OFT-4	4.1 miles, E, Pole #B350-72	TLD	Quarterly	Direct Radiation	Quarterly
OFT-5	4.2 miles ESE, Pole #B387-32	TLD	Quarterly	Direct Radiation	Quarterly
OFT-6	4.9 miles SE, Pole #B426-1	TLD	Quarterly	Direct Radiation	Quarterly
OFT-7	2.5 miles S, Bridgman Substation	TLD	Quarterly	Direct Radiation	Quarterly
OFT-8	4.0 miles S, Pole #B424-20	TLD	Quarterly	Direct Radiation	Quarterly
OFT-9	4.4 miles ESE, Pole #B369-214	TLD	Quarterly	Direct Radiation	Quarterly
OFT-10	3.8 miles S, Pole #B422-99	TLD	Quarterly	Direct Radiation	Quarterly
OFT-11	3.8 miles S, Pole #B423-12	TLD	Quarterly	Direct Radiation	Quarterly

GROUNDWATER (WELL WATER) SAMPLE STATIONS					
W-1	1969 ft @ 11° from Plant Axis	Groundwater	Quarterly	Gamma Isotopic	Quarterly
				Tritium	Quarterly
W-2	2302 ft @ 63° from Plant Axis	Groundwater	Quarterly	Gamma Isotopic	Quarterly
				Tritium	Quarterly
W-3	3279 ft @ 107° from Plant Axis	Groundwater	Quarterly	Gamma Isotopic	Quarterly
				Tritium	Quarterly
W-4	418 ft @ 301° from Plant Axis	Groundwater	Quarterly	Gamma Isotopic	Quarterly
				Tritium	Quarterly
W-5	404 ft @ 290° from Plant Axis	Groundwater	Quarterly	Gamma Isotopic	Quarterly
				Tritium	Quarterly
W-6	424 ft @ 273° from Plant Axis	Groundwater	Quarterly	Gamma Isotopic	Quarterly
				Tritium	Quarterly
W-7	1895 ft @ 189° from Plant Axis	Groundwater	Quarterly	Gamma Isotopic	Quarterly
				Tritium	Quarterly
W-8	1274 ft @ 54° from Plant Axis	Groundwater	Quarterly	Gamma Isotopic	Quarterly
				Tritium	Quarterly
W-9	1447 ft @ 22° from Plant Axis	Groundwater	Quarterly	Gamma Isotopic	Quarterly
				Tritium	Quarterly
W-10	4216 ft @ 129° from Plant Axis	Groundwater	Quarterly	Gamma Isotopic	Quarterly
				Tritium	Quarterly
W-11	3206 ft @ 153° from Plant Axis	Groundwater	Quarterly	Gamma Isotopic	Quarterly
				Tritium	Quarterly
W-12	2631 ft @ 162° from Plant Axis	Groundwater	Quarterly	Gamma Isotopic	Quarterly
				Tritium	Quarterly
W-13	2152 ft @ 182° from Plant Axis	Groundwater	Quarterly	Gamma Isotopic	Quarterly
				Tritium	Quarterly
W-14	1780 ft @ 164° from Plant Axis	Groundwater	Quarterly	Gamma Isotopic	Quarterly
				Tritium	Quarterly
W-15	725 ft @ 202° from Plant Axis NPDES well MW-12C	Groundwater	Quarterly	Gamma Isotopic	Quarterly
				Tritium	Quarterly
W-16	2200 ft @ 208° from Plant Axis NPDES well MW-20	Groundwater	Quarterly	Gamma Isotopic	Quarterly
				Tritium	Quarterly
W-17	2200 ft @ 180° from Plant Axis NPDES well MW-21	Groundwater	Quarterly	Gamma Isotopic	Quarterly
				Tritium	Quarterly

DRINKING WATER					
STJ	St. Joseph Public Intake Sta. 9 mi. NE	Drinking water	Once per calendar Day	Gross Beta	14 day Comp.
				Gamma Isotopic	14 day Comp.
				I-131	14 day Comp.
				Tritium	Quart. Comp.
LTW	Lake Twp. Public Intake Sta. 0.6 mi. S	Drinking water	Once per calendar Day	Gross Beta	14 day Comp.
				Gamma Isotopic	14 day Comp.
				I-131	14 day Comp.
				Tritium	Quart. Comp

SAMPLE STATION	DESCRIPTION/ LOCATION	SAMPLE TYPE	SAMPLE FREQUENCY	ANALYSIS TYPE	ANALYSIS FREQUENCY
SURFACE WATER					
SWL-2	Plant Site Boundary - South ~ 500 ft. south of Plant Centerline	Surface Water	Once per calendar Day	Gamma Isotopic	Month. Comp.
				Tritium	Quart. Comp
SWL-3	Plant Site Boundary - North ~ 500 ft. north of Plant Centerline	Surface Water	Once per calendar Day	Gamma Isotopic	Month. Comp.
				Tritium	Quart. Comp.

SEDIMENT					
SL-2	Plant Site Boundary - South ~ 500 ft. south of Plant Centerline	Sediment	Semi-Ann.	Gamma Isotopic	Semi-Annual
SL-3	Plant Site Boundary - North ~ 500 ft. north of Plant Centerline	Sediment	Semi-Ann.	Gamma Isotopic	Semi-Annual

INGESTION - MILK Indicator Farms*					
		Milk	Once every 15 days	I-131	per sample
				Gamma Isotopic	per sample
		Milk	Once every 15 days	I-131	per sample
				Gamma Isotopic	per sample
		Milk	Once every 15 days	I-131	per sample
				Gamma Isotopic	per sample

INGESTION - MILK Background Farm*					
		Milk	Once every 15 days	I-131	per sample
				Gamma Isotopic	per sample

SAMPLE STATION	DESCRIPTION/ LOCATION	SAMPLE TYPE	SAMPLE FREQUENCY	ANALYSIS TYPE	ANALYSIS FREQUENCY
INGESTION - FISH					
ONS-N	0.3 mile N, Lake Michigan	Fish - edible portion	2/year	Gamma Isotopic	per sample
ONS-S	0.4 mile S, Lake Michigan	Fish - edible portion	2/year	Gamma Isotopic	per sample
OFS-N	3.5 mile N, Lake Michigan	Fish - edible portion	2/year	Gamma Isotopic	per sample
OFS-S	5.0 mile S, Lake Michigan	Fish - edible portion	2/year	Gamma Isotopic	per sample

INGESTION - FOOD PRODUCTS					
On Site					
ONS-G	Nearest sample to Plant in the highest D/Q land sector containing media.	Grapes	At time of harvest	Gamma Isotopic	At time of harvest
ONS-V		Broadleaf vegetation	At time of harvest	Gamma Isotopic	At time of harvest
Off Site					
OFS-G	In a land sector containing grapes, approximately 20 miles from the plant, in one of the less prevalent D/Q land sectors	Grapes	At time of harvest	Gamma Isotopic	At time of Harvest
OFS-V		Broadleaf vegetation	At time of harvest	Gamma Isotopic	At time of harvest

INGESTION - BROADLEAF IN LIEU OF GARDEN CENSUS OR MILK				
3 samples of different types of broad leaf vegetation collected at 2 different locations, within eight miles of the plant in the highest annual average D/Q land sector.	Broadleaf vegetation	Monthly when available	Gamma Isotopic I131	Monthly when available
1 background sample of similar vegetation grown 15-25 miles distant in one of the less prevalent wind directions.	Broadleaf vegetation	Monthly when available	Gamma Isotopic I131	Monthly when available

Collect composite samples of Drinking and Surface water at least daily. Analyze particulate sample filters for gross beta activity 24 or more hours following filter removal. This will allow for radon and thoron daughter decay. If gross beta activity in air or water is greater than 10 times the yearly mean of control samples for any medium, perform gamma isotopic analysis on the individual samples.

IF at least three indicator milk samples and one background milk sample cannot be obtained, **THEN** three broad leaf samples of different types will be collected at 2 different locations, within eight miles of the plant, in the land sector with the highest D/Q (refers to the highest annual average D/Q). Also, one background broad leaf sample of similar types will be collected 15 to 25 miles from the plant in one of the less prevalent D/Q land sectors.

*The three milk indicator and one background farm will be determined by the Annual Land Use Census and those that are willing to participate. **IF** it is determined that the milk animals are fed stored feed, **THEN** monthly sampling is appropriate for that time period.

Evaluate samples that identified positive plant effluent related radionuclides and determine if additional analysis are necessary to identify hard to detect radionuclides. The 10 CFR 61 scaling factor report should be consulted along with the radioactive material shipping program owner and the ODCM program owner to assist with this determination.

[Ref. 5.2.1w]

Radionuclides	Food Product ρCi/kg, wet	Water ρCi/l	Milk ρCi/l	Air Filter ρCi/m^3	Fish ρCi/kg, wet	Sediment ρCi/kg, dry
Gross Beta		4		0.01		
H-3		2000				
Ba-140		60	60			
La-140		15	15			
Cs-134	60	15	15	0.06	130	150
Cs-137	60	18	18	0.06	150	180
Zr-95		30				
Nb-95		15				
Mn-54		15			130	
Fe-59		30			260	
Zn-65		30			260	
Co-58		15			130	
Co-60		15			130	
I-131	60	1	1	0.07		

This Data is directly from our plant-specific Technical Specification.

NOTES

A. The Lower Limit of Detection (LLD) is defined as the smallest concentration of radioactive material in a sample that will be detected with 95% probability and 5% probability of falsely concluding that a blank observation represents a "real" signal.

For a particular measurement system (which may include radiochemical separation), the LLD is given by the equation:

$$LLD = \frac{4.66^{a} * S}{E * V * 2.22 * Y * e^{(-\lambda * \Delta t)}}$$

Where LLD is the a priori lower limit of detection as defined above (as ρCi per unit mass or volume). Perform analysis in such a manner that the stated LLDs will be achieved under routine conditions. Occasionally background fluctuations, unavoidably small sample sizes, the presence of interfering radionuclides, or other uncontrollable circumstances may render these LLDs unachievable. It should be further clarified that the LLD represents the capability of a measurement system and not as an after the fact limit for a particular measurement.

S is the standard deviation of the background counting rate or of the counting rate of a blank sample as appropriate (as counts per minute).

E is the counting efficiency of the detection equipment as counts per transformation (that is, disintegration)

V is the sample size in appropriate mass or volume units

2.22 is the conversion factor from picocuries (ρCi) to transformations (disintegrations) per minute

Y is the fractional radiochemical yield as appropriate

λ is the radioactive decay constant for the particular radionuclide

Δt is the elapsed time between the midpoint of sample collection (or end of sample collection period) and time of counting.

B. Identify and report other peaks which are measurable and identifiable, together with the radionuclides listed in Attachment 3.20, Maximum Values for Lower Limits of Detections[A,B] - REMP.

[a] A 2.71 value may be added to the equation to provide correction for deviations in the Poisson distribution at low count rates, that is, 2.71 + 4.66 x S.

Radionuclides	Food Product ρCi/kg, wet	Water ρCi/l	Milk ρCi/l	Air Filter ρCi/m^3	Fish ρCi/kg, wet
H-3		20000			
Ba-140		200	300		
La-140		200	300		
Cs-134	1000	30	60	10	1000
Cs-137	2000	50	70	20	2000
Zr-95		400			
Nb-95		400			
Mn-54		1000			30000
Fe-59		400			10000
Zn-65		300			20000
Co-58		1000			30000
Co-60		300			10000
I-131	100	2	3	0.90	

IF any of the above concentration levels are exceeded **THEN** see guidance contained in step 3.5.2a. for additional information.

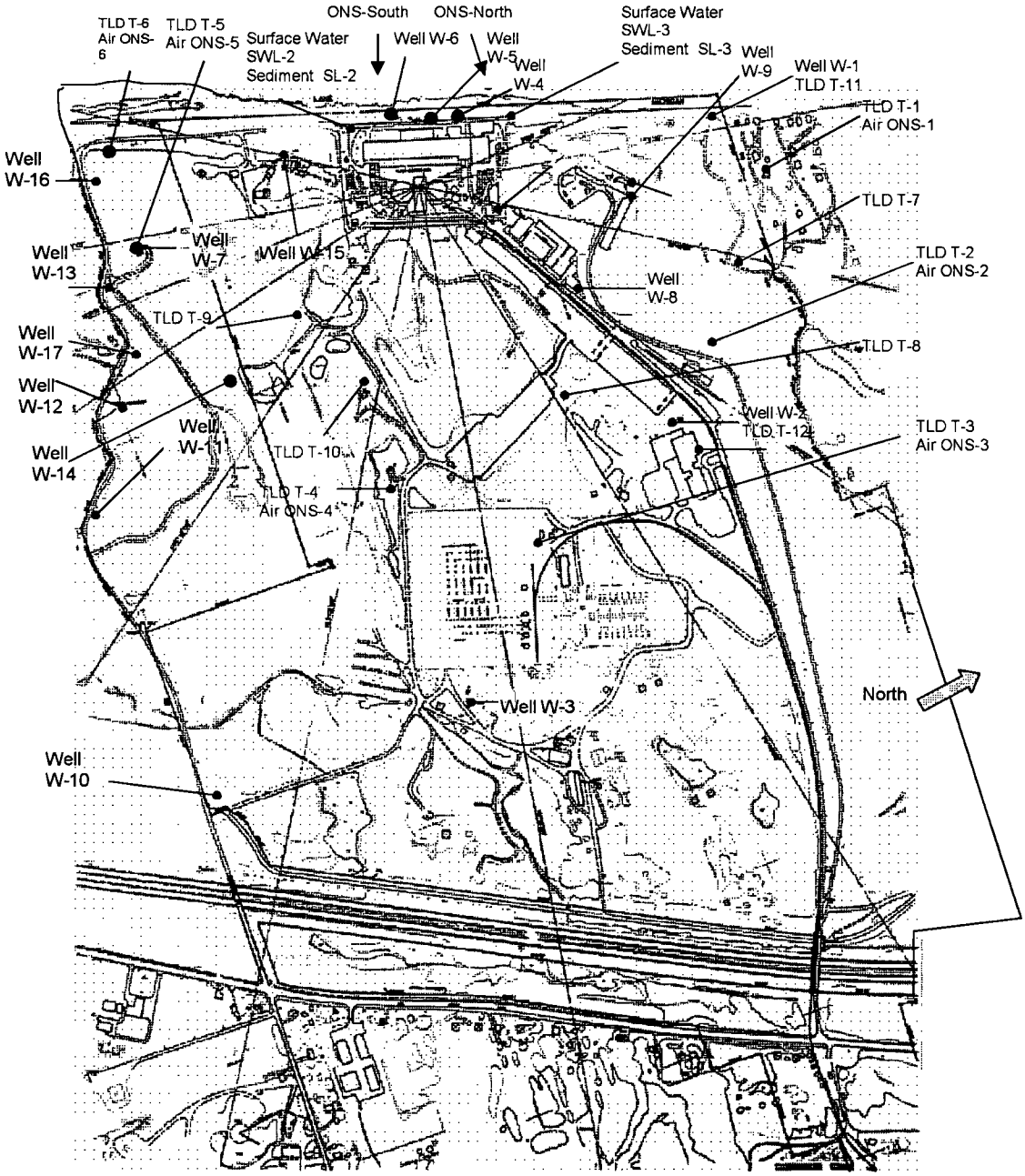

LEGEND

ONS-1 – ONS-6: Air Sampling Station
T-1 – T-12: TLD Sampling Station
W-1 – W-17: REMP Groundwater Wells
SWL- 2, 3: Surface Water Sampling Stations
SL-2 SL-3: Sediment Sampling Stations
ONS-N & S: Fish sampling locations

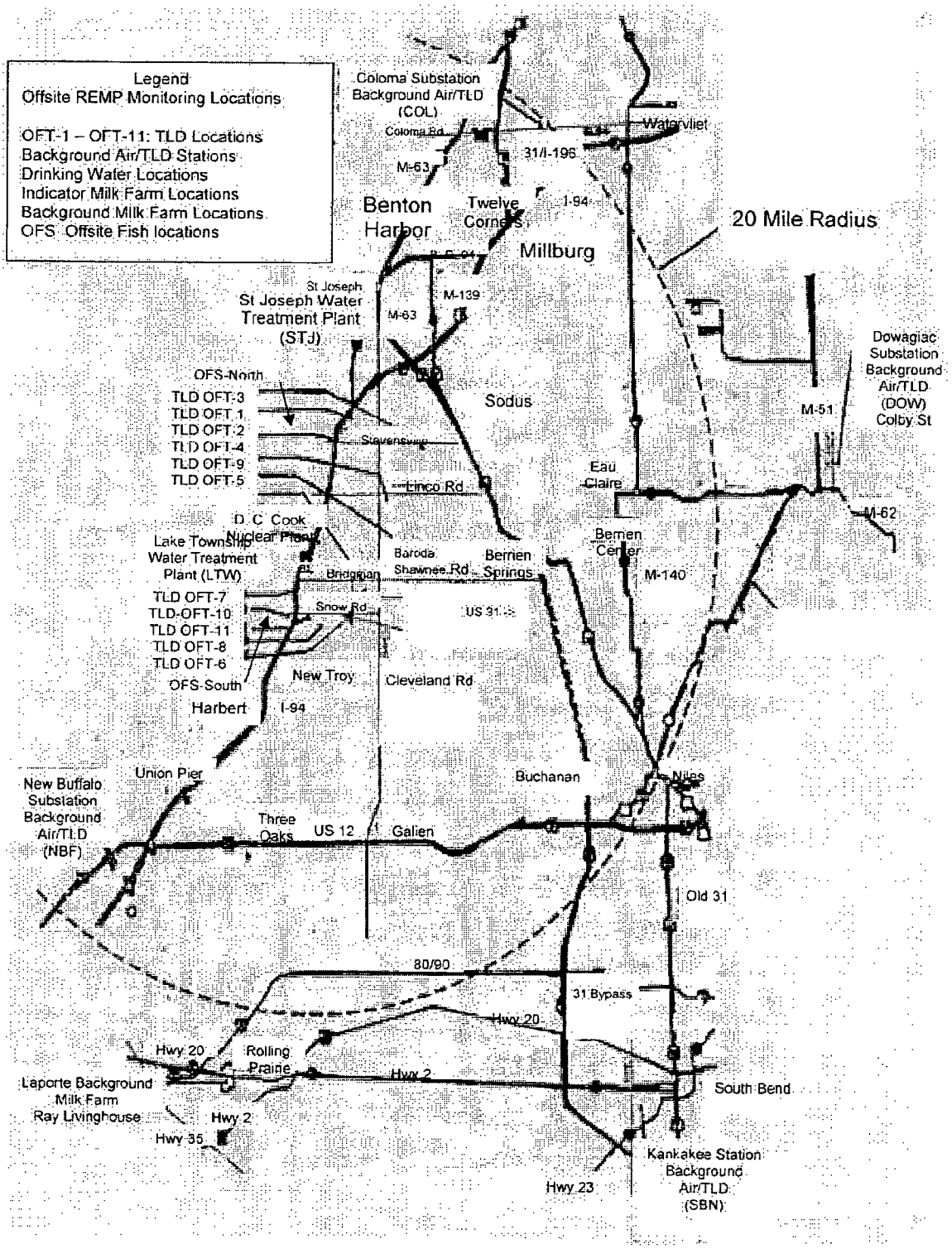
Legend
Offsite REMP Monitoring Locations
OFT-1 – OFT-11: TLD Locations
Background Air/TLD Stations
Drinking Water Locations
Indicator Milk Farm Locations
Background Milk Farm Locations
OFS Offsite Fish locations
Coloma Substation Background Air/TLD (COL)
Coloma Rd
Watervliet
31/I-196
M-63
Benton Harbor
Twelve Corners
I-94
Millburg
20 Mile Radius
St Joseph
St Joseph Water Treatment Plant (STJ)
M-139
M-63
Dowagiac Substation Background Air/TLD (DOW)
Colby St
OFS-North
TLD OFT-3
TLD OFT-1
TLD OFT-2
TLD OFT-4
TLD OFT-9
TLD OFT-5
Sodus
M-51
Stevensville
Eau Claire
Linco Rd
M-62
D C Cook Nuclear Plant
Lake Township Water Treatment Plant (LTW)
Baroda
Bridgman
Shawnee Rd
Berrien Springs
Berrien Center
M-140
TLD OFT-7
TLD-OFT-10
TLD OFT-11
TLD OFT-8
TLD OFT-6
Snow Rd
US 31
OFS-South
New Troy
Cleveland Rd
Harbert
I-94
New Buffalo Substation Background Air/TLD (NBF)
Union Pier
Buchanan
Niles
Three Oaks
US 12
Galien
Old 31
80/90
31 Bypass
Hwy 20
Hwy 20
Rolling Prairie
Hwy 2
Laporte Background Milk Farm Ray Livinghouse
Hwy 2
Hwy 35
South Bend
Kankakee Station Background Air/TLD (SBN)
Hwy 23

REVISION SUMMARY

Procedure No.: PMP-6010-OSD-001 Rev. No.: 24
Title: OFF-SITE DOSE CALCULATION MANUAL

Alteration	Justification
10 CFR 50.59 is not applicable to this procedure revision.	Per definition in Attachment 1 of PMP-2010-PRC-002. This is an administrative procedure governing the conduct of facility operations. Changes to this document are made in accordance with Technical Specification 5.5.1 and implemented through 12-EA-6090-ENV-114, Effectiveness Review for ODCM/PCP Programs.
Step 3.2.3d and e was altered to provide a total dose value. References to recycling water for reuse from the North Boric Acid Evaporator (NBAE) were removed.	Clarified the doses, which are "per unit" and can be totaled for a final value. References to recycling water for reuse from the North Boric Acid Evaporator (NBAE) were removed as CNP no longer recycles processed distillate water due to high tritium source term. This supports the Groundwater Protection Program. Editorial Change Criteria (ECC) n.
Step 3.2.4d was rewritten to align the ODCM for gaseous radwaste treatment to the UFSAR 11.1.3.2, as well as to provide a total dose value. Steps were renumbered accordingly.	Enhancement to ensure proper linkage between the ODCM and the UFSAR on waste gas treatment, and to ensure the significance of the 45 day decay hold is understood. Clarified the doses, which are "per unit" and can be totaled for a final value. Editorial Change Criteria (ECC) n.
Corrected the Land Use Census Bases, changing the quantity to 26kg/year and removed a reference error.	This value comes from Regulatory Guide 1.109 Table E-5. TS 6.8.4b no longer exists and was removed. Minor correction which fixed a typographical error that does not involve a change of procedure intent and complies with ECC n.

REVISION SUMMARY

Procedure No.: PMP-6010-OSD-001 Rev. No.: 24
Title: OFF-SITE DOSE CALCULATION MANUAL

Alteration	Justification
Attachment 3.4 Table Notation #2 was re-written for clarification.	Enhancement to remove potential error traps deciding when releases were in progress or not. Degassing primarily occurs in the Volume Control Tank (VCT) which is not vented to Containment. Primary Relief Tank venting occurs after Mode 5 and has a minimal volume compared to the containment volume. The venting of these components has proceduralized dose evaluations and effluent quantifications so there is no reduction in detection or dose reporting. Leak detection requirements are not in effect in Modes 5-6, so Particulate Channels are not required to be Operable. Used terminology for operating Purge System that mirrors the terms used in Operations procedures for clarity. Provided specific guidance on when Ventilate Mode is entered. All gaseous releases from Containment are monitored at all times via Containment Channels and/or Ventilation Stack Channels along with associated actions per 3.4. There is no reduction in effectiveness or ALARA. This does not involve a change of procedure intent and complies with ECC q
Attachment 3.17 Removed sign-off step 5 which is no longer applicable.	This does not involve a change of procedure intent and complies with ECC q as this is an administrative action for documentation purposes only. NS&A no longer exists and copies are kept in NDM.
Attachment 3.20 Removed asterisk and note at bottom of the chart referring to the LLD of Drinking Water.	The LLD for gross beta is easily achieved for drinking water, and can be applied to all water samples needing a gross beta count. This eliminates confusion on non-drinking water samples and is more conservative. This does not involve a change of procedure intent and complies with ECC q.

REVISION SUMMARY

Procedure No.: PMP-6010-OSD-001 Rev. No.: 24
Title: OFF-SITE DOSE CALCULATION MANUAL

Alteration	Justification
Attachment 3.23 Removed Indicator milk farm locations on the map for the Monroe and Schuler Farms. Added reference to US-31 in same map location.	The two farms will no longer be providing milk samples so they are being removed from the map. AR#2011-13312. This does not involve a change of procedure intent and complies with ECC q as this is an administrative action for documentation purposes only.
Attachment 3.24 Removed the entire attachment.	The Attachment 3.24 addresses an evaluation of an issue which no longer exists at CNP and was retained in the ODCM solely as a historical record. This evaluation record will be now maintained within the site's 10 CFR 50.75 (g) file for decommissioning of the site. The evaluation provided no directions or guidance relating to offsite dose, so its removal does not lower ODCM effectiveness or impact dose to the General Public. This removal is being performed using the appropriate change protocols for the ODCM per Attachment 3.24 section 5 Conclusion of the evaluation and will be reported to the NRC via the normal protocols associated with ODCM changes, namely inclusion into the Annual Radioactive Effluent Release Report. The evaluation is in no way being altered and is being simply removed from the ODCM and placed into the 50.75(g) for historical documentation. This process had been discussed with the NRC at the time of decommissioning the low level waste storage area and was not objected to so long as we used our normal ODCM change protocols. This does not involve a change of procedure intent and complies with ECC q as this is an administrative action for documentation purposes only. AR#2010-4618

Office Information for Form Tracking Only - Not Part of Form

This is a free-form as called out in PMP-2010-PRC-002, Procedure Alteration, Review, and Approval.