Technical Analysis Approach Plan for Level 3 PRA Project

Rev. 0a – Working Draft

April 2013

DRAFT

TABLE OF CONTENTS

1. Introduction 1
   1.1 Background 1
   1.2 Objectives 2
   1.3 Scope 2
   1.4 Assumptions and Limitations 4
2. Approach 6
   2.1 Project Organization 6
   2.2 Overall Approach 8
      2.2.1 Technical Approach Philosophy 9
      2.2.2 Proposed Tools and Models 9
      2.2.3 Key Challenges and Gaps in PRA Technology 10
         2.2.3.1 Modeling of Site Risk 11
         2.2.3.2 Spent Fuel PRA Technology 11
         2.2.3.3 Human Reliability Analysis 12
         2.2.3.4 Additional Modeling Issues 12
   2.3 Approach Summary 13
   2.4 Quality Assurance 13
3. Overall Technical Approach to a Full-Scope Site Level 3 PRA 14
4. Technical Approach for Success Criteria Analysis 16
   4.1 Assumptions and Limitations 16
   4.2 Inputs 17
   4.3 Analysis Steps 19
   4.4 Documentation 21
   4.5 Task Interfaces 22
   4.6 References 23
5. Technical Approach for Systems Analysis 24
   5.1 Assumptions and Limitations 24
   5.2 Inputs 24
   5.3 Analysis Steps 25
   5.4 Documentation 27
   5.5 Task Interfaces 28
   5.6 References 28

DRAFT

6. Technical Approach for Data Analysis 30
6.1 Assumptions and Limitations 30
6.2 Inputs 30
6.3 Analysis Steps 31
6.4 Documentation 33
6.5 Task Interfaces 33
6.6 References 33

7. Technical Approach for Human Reliability Analysis 34
7.1 Assumptions and Limitations 36
7.2 Inputs 36
7.3 Analysis Steps 39
7.4 Documentation 48
7.5 Task Interfaces 49
7.6 References 51

8. Technical Approach for Structural Analysis 52
8.1 Assumptions and Limitations 52
8.2 Inputs 53
8.3 Analysis Steps 55
8.4 Documentation 58
8.5 Task Interfaces 58
8.6 References 60

9. Technical Approach for Fragility Analysis 62
9.1 Assumptions and Limitations 62
9.2 Inputs 64
9.3 Analysis Steps 67
9.4 Documentation 70
9.5 Task Interfaces 71
9.6 References 73

10. Technical Approach for Hazard Analysis 75
10.1 Assumptions and Limitations 75
10.2 Inputs 76
10.3 Analysis Steps 76
10.4 Documentation 77
10.5 Task Interfaces 78
10.6 References 79

DRAFT

11. Technical Approach for Uncertainty Analysis....80
11.1 Introduction....80
11.2 Assumptions and Limitations....80
11.3 Inputs....80
11.4 Analysis Steps....81
11.5 Products....85
11.6 Task Interfaces....86
11.7 References....86

12. Technical Approach for Reactor, At-Power, Internal Hazards PRA....87
12.1 Task 1-1: Level 1 Reactor PRA, At-Power for Internal Hazards....87
12.1.1 Subtask 1-1.1: Level 1 PRA for At-Power and Internal Events....87
12.1.1.1 Subtask 1-1.1a: Initiating Event Analysis....87
12.1.1.2 Subtask 1-1.1b: Accident Sequence Analysis....90
12.1.1.3 Subtask 1-1.1c: Success Criteria....93
12.1.1.4. Subtask 1-1.1d: Systems Analysis....94
12.1.1.5 Human Reliability Analysis....97
12.1.1.6 Subtask 1-1.1f: Data Analysis....104
12.1.1.7 Subtask 1-1.1g: Quantification....108
12.1.1.8 Uncertainty Analysis....111
12.1.2 Subtask 1-1.2: Level 1 Reactor PRA for At-Power and Internal Floods 112
12.1.2.1 Assumptions and Limitations....112
12.1.2.2 Inputs....113
12.1.2.3 Analysis Steps....113
12.1.2.4 Documentation....117
12.1.2.5 Task Interfaces....117
12.1.2.6 References....118
12.1.3 Subtask 1-1.3: Level 1 Reactor PRA for At-Power, Internal Fires....118
12.1.3.1 Assumptions and Limitations....119
12.1.3.2 Inputs....119
12.1.3.3 Analysis Steps....120
12.1.3.4 Documentation....121
12.1.3.5 Task Interfaces....122
12.1.3.6 References....122
12.2 Task 1-2: Level 2 Reactor PRA, At-Power for Internal Hazards....122
12.2.1 Subtask 1-2.1: Level 1/2 PRA Interface – Accident Sequence Grouping....123

DRAFT

12.2.1.1 Assumptions and Limitations 124
12.2.1.2 Inputs 124
12.2.1.3 Analysis Steps 124
12.2.1.4 Documentation 127
12.2.1.5 Task Interfaces 127
12.2.1.6 References 129
12.2.2 Subtask 1-2.2: Containment Capacity Analysis 129
12.2.2.1 Assumptions and Limitations 129
12.2.2.2 Inputs 129
12.2.2.3 Analysis Steps 130
12.2.2.4 Documentation 131
12.2.2.5 Task Interfaces 131
12.2.2.6 References 132
12.2.3 Subtask 1-2.3: Severe Accident Progression Analysis 132
12.2.3.1 Assumptions and Limitations 132
12.2.3.2 Inputs 133
12.2.3.3 Analysis Steps 134
12.2.3.4 Documentation 136
12.2.3.5 Task Interfaces 138
12.2.3.6 References 138
12.2.4 Subtask 1-2.4: Probabilistic Treatment of Accident Progression 138
12.2.4.1 Assumptions and Limitations 139
12.2.4.2 Inputs 139
12.2.4.3 Analysis Steps 140
12.2.4.4 Documentation 143
12.2.4.5 Task Interfaces 144
12.2.4.6 References 145
12.2.5 Subtask 1-2.5: Radiological Source Term Analysis 145
12.2.5.1 Assumptions and Limitations 145
12.2.5.2 Inputs 145
12.2.5.3 Analysis Steps 145
12.2.5.4 Documentation 147
12.2.5.5 Task Interfaces 148
12.2.5.6 References 148
12.2.6 Subtask 1-2.6: Evaluation and Presentation of Results 148
12.2.6.1 Assumptions and Limitations 149

DRAFT

12.2.6.2 Inputs 149
12.2.6.3 Analysis Steps 149
12.2.6.4 Documentation 149
12.2.6.5 Task Interfaces 150
12.2.6.6 References 150
12.2.7 Subtask 1-2.7: Level 2/3 PRA Interface 150
12.2.7.1 Assumptions and Limitations 150
12.2.7.2 Inputs 150
12.2.7.3 Analysis Steps 150
12.2.7.4 Documentation 151
12.2.7.5 Task Interfaces 151
12.2.7.6 References 151
12.3 Task 1-3: Level 3 Reactor PRA, At-Power for Internal Hazards 151
12.3.1 Subtask 1-3.1: Transition from the Radionuclide Release to Level 3 152
12.3.1.1 Assumptions and Limitations 152
12.3.1.2 Inputs 152
12.3.1.3 Analysis Steps 153
12.3.1.4 Documentation 155
12.3.1.5 Task Interfaces 155
12.3.2 Subtask 1-3.2: Protective Action Parameters and Other Site Data . 156
12.3.2.1 Assumptions and Limitations 156
12.3.2.2 Inputs 157
12.3.2.3 Analysis Steps 157
12.3.2.4 Documentation 159
12.3.2.5 Task Interfaces 160
12.3.3 Meteorological Data 160
12.3.3.1 Assumptions and Limitations 160
12.3.3.2 Inputs 161
12.3.3.3 Analysis Steps 161
12.3.3.4 Documentation 162
12.3.3.5 Task Interfaces 163
12.3.4 Subtask 1-3.4: Atmospheric Transport and Dispersion 163
12.3.4.1 Assumptions and Limitations 163
12.3.4.2 Inputs 164
12.3.4.3 Analysis Steps 164
12.3.4.4 Documentation 165

DRAFT

12.3.4.5 Task Interfaces 166
12.3.5 Subtask 1-3.5: Dosimetry 166
12.3.5.1 Assumptions and Limitations 166
12.3.5.2 Inputs 167
12.3.5.3 Analysis Steps 167
12.3.5.4 Documentation 167
12.3.5.5 Task Interfaces 168
12.3.6 Subtask 1-3.6: Health Effects 168
12.3.6.1 Assumptions and Limitations 168
12.3.6.2 Inputs 168
12.3.6.3 Analysis Steps 169
12.3.6.4 Documentation 169
12.3.6.5 Task Interfaces 169
12.3.7 Subtask 1-3.7: Economic Factors 169
12.3.7.1 Assumptions and Limitations 170
12.3.7.2 Inputs 170
12.3.7.3 Analysis Steps 171
12.3.7.4 Documentation 171
12.3.7.5 Task Interfaces 171
12.3.8 Subtask 1-3.8: Quantification and Reporting 171
12.3.8.1 Assumptions and Limitations 172
12.3.8.2 Inputs 172
12.3.8.3 Analysis Steps 172
12.3.8.4 Documentation 173
12.3.8.5 Task Interfaces 174
12.3.9 Subtask 1-3.9: Risk Integration 174
12.3.10 Interfaces for Overall Task 1-3 174
12.3.11 References 174

13. Technical Approach for Reactor, At-Power for External and Other Hazards PRA 176
13.1 Task 2-1: Level 1 Reactor PRA, At-Power for External and Other Hazards 176
13.1.1 Subtask 2-1.2: Level 1 Reactor PRA for At-Power and Seismic Events 176
13.1.1.1 Assumptions and Limitations 176
13.1.1.2 Inputs 177
13.1.1.3 Analysis Steps 177
13.1.1.4 Documentation 180

DRAFT

13.1.1.5 Task Interfaces 182
13.1.1.6 References 182
13.1.2 Subtask 2-1.2: Level 1 Reactor PRA for At-Power and High Winds 182
13.1.2.1 Assumptions and Limitations 183
13.1.2.2 Inputs 183
13.1.2.3 Analysis Steps 184
13.1.2.4 Documentation 185
13.1.2.5 Task Interfaces 187
13.1.2.6 References 187
13.1.3 Subtask 2-1.3: Level 1 Reactor PRA for At-Power and External Floods 187
13.1.3.1 Assumptions and Limitations 188
13.1.3.2 Inputs 189
13.1.3.3 Analysis Steps 189
13.1.3.4 Documentation 191
13.1.3.5 Task Interfaces 192
13.1.3.6 References 193
13.1.4 Subtask 2-1.4: Level 1 Reactor PRA for At-Power and Other External Hazards 193
13.1.4.1 Assumptions and Limitations 193
13.1.4.2 Inputs 194
13.1.4.3 Analysis Steps 195
13.1.4.4 Documentation 197
13.1.4.5 Task Interfaces 198
13.1.4.6 References 198
13.2 Task 2-2: Level 2 Reactor PRA, At-Power for External Hazards 199
13.3 Task 2-3: Level 3 Reactor PRA, At-Power for External Hazards 201

14. Technical Approach for Reactor, Low Power and Shutdown, All Hazards PRA 202
14.1 Task 3-1: Level 1 Reactor PRA, Low Power and Shutdown for All Hazards 202
14.1.1 Subtask 3-1.1: Level 1 Reactor PRA for Low Power and Shutdown and Internal Events 202
14.1.1.1 Assumptions and Limitations 202
14.1.1.2 Inputs 203
14.1.1.3 Analysis Steps 204
14.1.1.4 Documentation 210
14.1.1.5 Task Interfaces 210

DRAFT

14.1.1.6 References 210
14.1.2 Subtask 3-1.2: Level 1 Reactor PRA for Low Power and Shutdown and Internal Floods 212
14.1.2.1 Assumptions and Limitations 212
14.1.2.2 Inputs 212
14.1.2.3 Analysis Steps 213
14.1.2.4 Documentation 215
14.1.2.5 Task Interfaces 216
14.1.2.6 References 216
14.1.3 Subtask 3-1.3: Level 1 Reactor PRA for Low Power and Shutdown and Internal Fires 217
14.1.4 Subtask 3-1.4: Level 1 Reactor PRA for Low Power and Shutdown and Seismic Events, High Winds, and External Floods 217
14.1.5 Subtask 3-1.5: Level 1 Reactor PRA for Low Power and Shutdown and Other External Hazards 217
14.1.5.1 Assumptions and Limitations 218
14.1.5.2 Inputs 218
14.1.5.3 Analysis Steps 219
14.1.4.4 Documentation 222
14.1.5.5 Task Interfaces 223
14.1.5.6 References 223
14.2 Task 3-2: Level 2 Reactor PRA, Low Power and Shutdown for All Hazards 224
14.3 Task 3-3: Level 3 Reactor PRA, Low Power and Shutdown for All Hazards 226

15. Technical Approach for Spent Fuel Pool PRA 227
15.1 Task 4-1: Level 1/2 Spent Fuel Pool PRA 227
15.1.1 Subtask 4-1.1: Initiating Event Analysis 228
15.1.1.1 Assumptions and Limitations 229
15.1.1.2 Inputs 229
15.1.1.3 Analysis Steps 230
15.1.1.4 Documentation 231
15.1.1.5 Task Interfaces 232
15.1.1.6 References 232
15.1.2 Subtask 4-1.2: Structural Analysis 232
15.1.2.1 Assumptions and Limitations 233
15.1.2.2 Inputs 233
15.1.2.3 Analysis Steps 233
15.1.2.4 Documentation 234

DRAFT

15.1.2.5 Task Interfaces 234
15.1.2.6 References 235
15.1.3 Subtask 4-1.3: Accident Sequence Analysis 235
15.1.3.1 Assumptions and Limitations 235
15.1.3.2 Inputs 235
15.1.3.3 Analysis Steps 236
15.1.3.4 Documentation 237
15.1.3.5 Task Interfaces 237
15.1.3.6 References 237
15.1.4 Subtask 4-1.4: Systems Analysis 237
15.1.4.1 Assumptions and Limitations 238
15.1.4.2 Inputs 238
15.1.4.3 Analysis Steps 239
15.1.4.4 Documentation 239
15.1.4.5 Task Interfaces 239
15.1.4.6 References 240
15.1.5 Subtask 4-1.5: Human Reliability Analysis 240
15.1.6 Subtask 4-1.6: Accident Progression and Success Criteria Analysis 240
15.1.6.1 Assumptions and Limitations 240
15.1.6.2 Inputs 240
15.1.6.3 Analysis Steps 242
15.1.6.4 Documentation 243
15.1.6.5 Task Interfaces 244
15.1.6.6 References 244
15.1.7 Subtask 4-1.7: Quantification 244
15.1.7.1 Assumptions and Limitations 245
15.1.7.2 Inputs 245
15.1.7.3 Analysis Steps 245
15.1.7.4 Documentation 246
15.1.7.5 Task Interfaces 246
15.1.7.6 References 246
15.1.8 Subtask 4-1.8: Uncertainty Analysis 246
15.1.8.1 Assumptions and Limitations 247
15.1.8.2 Inputs 247
15.1.8.3 Analysis Steps 247
15.1.8.4 Documentation 247

DRAFT

15.1.8.5 Task Interfaces 248
15.1.8.6 References 248
15.2 Task 4-2: Level 3 Spent Fuel Pool PRA....248

16. Technical Approach for Dry Cask Storage PRA 249
16.1 Task 5-1: Dry Cask Storage PRA for Cask Damage (Release Frequency)....249
16.1.1 Subtask 5-1.1: Dry Cask Description and Operational Phases 251
16.1.1.1 Assumptions and Limitations 252
16.1.1.2 Inputs 252
16.1.1.3 Analysis Steps 252
16.1.1.4 Documentation....253
16.1.1.5 Task Interfaces 253
16.1.2 Subtask 5-1.2: Initiating Event Analysis....253
16.1.2.1 Assumptions and Limitations 253
16.1.2.2 Inputs 254
16.1.2.3 Analysis Steps 254
16.1.2.4 Documentation....256
16.1.2.5 Task Interfaces 257
16.1.3 Subtask 5-1.3: Data Analysis....257
16.1.3.1 Assumptions and Limitations 257
16.1.3.2 Inputs 258
16.1.2.3 Analysis Steps 258
16.1.3.4 Documentation....259
16.1.3.5 Task Interfaces 260
16.1.4 Subtask 5-1.4: Human Reliability Analysis 260
16.1.5 Subtask 5-1.5: Success Criteria (Structural and Thermal Analysis) 260
16.1.5.1 Assumptions and Limitations 261
16.1.5.2 Inputs 261
16.1.5.3 Analysis Steps 262
16.1.5.4 Documentation....263
16.1.5.5 Task Interfaces 263
16.1.6 Subtask 5-1.6: Accident Sequence Analysis and Quantification 263
16.1.6.1 Assumptions and Limitations 264
16.1.6.2 Inputs 264
16.1.6.3 Analysis Steps 264
16.1.6.4 Documentation....265

DRAFT

16.1.6.5 Task Interfaces 266
16.1.7 Subtask 5-1.7: Uncertainty Analysis 266
16.1.7.1 Assumptions and Limitations 266
16.1.7.2 Inputs 266
16.1.7.3 Analysis Steps 266
16.1.7.4 Documentation 267
16.1.7.5 Task Interfaces 267
16.2 Task 5-2: Dry Cask Storage PRA for Health Effects (Consequence Analysis) 267
16.2.1 Subtask 5-2.1: Radionuclide Release 267
16.2.1.1 Assumptions and Limitations 267
16.2.1.2 Inputs 267
16.2.1.3 Analysis Steps 268
16.2.1.4 Documentation 269
16.2.1.5 Task Interfaces 269
16.2.2 Subtask 5-2.2: Consequence Analysis 269
16.3 References 270

17. Technical Approach for Integrated Site PRA 271

18. Quality Assurance 272
18.1 Established Methods, Tools and Data 272
18.2 Qualified Personnel 272
18.3 PRA Model Fidelity 273
18.4 Technical Review 274
18.4.1 Technical Advisory Group 274
18.4.2 Internal Self-Assessment 276
18.4.3 External Peer Review 290
18.4.4 Advisory Committee on Reactor Safeguards 292
18.5 Documentation Control 292
18.5.1 Storing and Accessing Project Information 293
18.5.2 Upload of Information onto the SharePoint Site 293
18.5.3 Document Control of Licensee Information 294
18.5.4 Documentation Backup 295
18.5.5 Use of External Media 295
18.5.6 Individual Personal Working Files 295
18.5.7 Use of Templates and Forms for Documentation 298
18.5.8 Documentation Control for NRC Contractors 302

DRAFT

18.5.9 Agreement of the Non-Disclosure Agreement to Allow Access to Proprietary Information 302
18.5.10 Guidance for Addressing Potential Technical Issues 303
18.5.11 Organization of the Various Types of Information on the SharePoint Site 307
18.6 Quality Assurance Program Implementation Audits 309

DRAFT

1. Introduction

1.1 Background

In response to the Commission direction in the staff requirements memorandum (SRM) (Agencywide Documents and Management System [ADAMS] Accession No. ML112640419) resulting from SECY-11-0089, "Options for Proceeding with Future Level 3 Probabilistic Risk Assessment (PRA) Activities" (ADAMS Accession No. ML11090A039), the staff is conducting a full-scope site Level 3 Probabilistic Risk Assessment (PRA). As described in SECY-11-0089, this project will meet the following objectives:

- Develop a Level 3 PRA, generally based on current state-of-practice methods, tools, and data,[1] that (1) reflects technical advances since the last NRC-sponsored Level 3 PRAs (NUREG-1150[2]), which were completed over 20 years ago, and (2) addresses scope considerations that were not previously considered (e.g., low power/shutdown (LPSD), multi-unit risk, other radiological sources).

- Extract new insights to enhance regulatory decisionmaking and to help focus limited U.S. Nuclear Regulatory Commission (NRC) resources on issues most directly related to the agency's mission to protect public health and safety.

- Enhance PRA staff capability and expertise, and improve documentation practices to make PRA information more accessible, retrievable, and understandable.

- Demonstrate technical feasibility and evaluate the realistic cost of developing new Level 3 PRAs.

The scope of the Level 3 PRA study includes all major site radiological sources,[3] all internal and external initiating event hazards typically considered in previous internal and external event PRAs,[4] and all modes of plant operation. This scope exceeds that of the NUREG-1150 studies in a number of areas. In particular, as described in SECY-11-0089, the NUREG-1150 studies did not include an assessment of accidents involving other radiological sources such as spent fuel pools, dry storage casks, and other units on site. Also, the NUREG-1150 studies only addressed at-power operation (though subsequent studies for two of the NUREG-1150 plants involved a limited analysis of low power and shutdown modes of operation) and only partially addressed external hazards.

The current Level 3 PRA study will also incorporate advances made in PRA technology since the completion of the NUREG-1150 studies, as well as more recent changes in nuclear power plant operational performance and safety.

[1] "State-of-practice" methods, tools, and data refer to those that are routinely used by the NRC and licensees or have acceptance in the PRA technical community.
[2] NUREG-1150, "Severe Accident Risk: An Assessment for Five U.S. Nuclear Power Plants," December 1990.
[3] Including all reactor cores, spent fuel pools, and dry storage casks on site, but excluding fresh nuclear fuel, radiological waste, and minor radiological sources (e.g., calibration devices).
[4] Deliberate malevolent acts (e.g., terrorism and sabotage) are specifically excluded from the scope of the study.

The staff intends to obtain a peer review of the study, consistent with the American Society of Mechanical Engineers/American Nuclear Society (ASME/ANS) PRA standard.[5]

1.2 Objectives

The objective of this plan is to provide the guidance to be used in performing the full-scope site Level 3 PRA. Developing guidance to define and explain the approach to be used will provide a common understanding by the various analysts performing the study, and ensure greater consistency in the development of the PRA models. The guidance is consistent with current best practices, as defined in both national consensus standards and other regulatory and industry guidance documents. Moreover, this guidance can be used to establish the review criteria for ensuring the technical acceptability of the full-scope site Level 3 PRA model.

1.3 Scope

The scope of this guide covers all technical elements associated with the full-scope site Level 3 PRA, as described in Section 1.1. There are a number of major components that comprise the scope of a PRA, as illustrated in Figure 1-1 and discussed below.

- A PRA can be used to quantify the associated risk from a variety of sources at the plant site. These sources can include the reactor core (or cores), the spent fuel pool, and dry cask storage. For this PRA, all of these sources of risk are being evaluated.

- A PRA can be used to quantify either the on-site or off-site consequences, or both. For this PRA, the primary focus is on the off-site consequences.

- A PRA can be used to quantify the risk from the reactor while the reactor is at-power, in a low-power or shutdown condition, or for all operating states. For this PRA, the risk during all operating states is being evaluated.

- A PRA can used to quantify the risk presented by challenges from (1) internal hazards, which include internal events, internal floods, and internal fires; (2) external hazards, which include seismic events, external floods, external fires, and high winds; or (3) other hazards, which can include transportation, aircraft, or others. For this PRA, all hazards are being evaluated.

[5] ASME/ANS RA-Sa-2009, "Standard for Level 1/Large Early Release Frequency Probabilistic Risk Assessment for Nuclear Power Plant Applications," Addendum A to RA-S-2008, ASME, New York, NY, American Nuclear Society, La Grange Park, Illinois, February 2009.

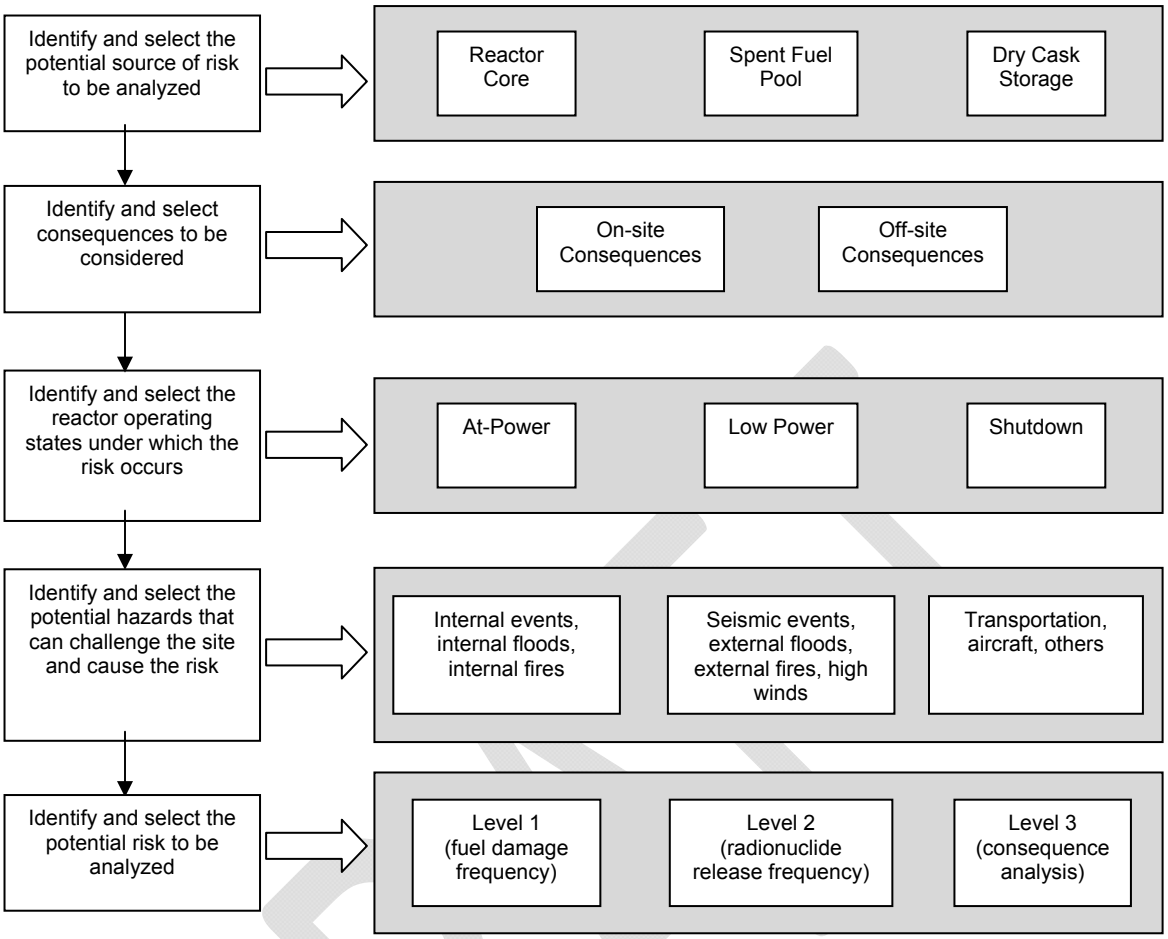

Figure 1-1 Components Comprising a PRA

- The PRA can quantify different levels of risk. The quantified risk can include the frequency of fuel damage (e.g., core damage for reactors), referred to as Level 1; the frequency of radionuclide releases to the environment and characterization of the radiological source terms, referred to as Level 2; or the estimation of various radiological health effects and economic consequence measures, referred to as Level 3. For this PRA, a Level 1, 2, and 3 analysis is being performed.

As noted above, various risk metrics are being quantified. The set of risk metrics provided will depend on the state-of-practice of the MACCS2 code, which is used to compute the risk and is currently undergoing modification. A tentative list of risk metrics that will be provided includes the following:

- Total early fatality risk
- Total latent cancer fatality risk
- Individual early fatality risk, as defined in the Quantitative Health Objectives (QHOs) [6]
- Individual latent cancer fatality risk, as defined in the QHOs

[6] 51 FR 30028, "Safety Goals for the Operations of Nuclear Power Plants," August 21, 1986.

- Population dose (person-rem) at various locations
- Off-site economic costs
- Individual early injury risk
- Individual cancer incident risk
- Land contamination

In addition to the consequence measures identified above, reactor core damage frequency (CDF) and large early release frequency (LERF) will be computed in intermediate steps, since these measures (which are Commission-approved surrogate metrics for individual latent cancer fatality risk and early fatality risk, respectively) are consistent with current risk-informed regulatory programs and applications (e.g., the significance determination process used to support the reactor oversight process, and risk-informed license amendment submittals).

In regard to the risk metric pertaining to off-site economic costs, as stated in SECY-11-0089, the staff previously considered developing additional safety goals based on the risk of land contamination and overall societal impact, but, based on the need at that time for up-to-date tools to better understand the extent of land contamination and societal impact, the staff recommended that this effort not be pursued.[7] However, due to the improvement in existing analytical tools (e.g., MACCS2),[8] it is currently envisioned that the Level 3 PRA study will estimate off-site economic costs from emergency response actions, and from intermediate- and long-term protective actions.

Figure 1-1 and the above discussion illustrate the scope for a risk evaluation by different sources; however, the risk for this Level 3 PRA is being evaluated for the entire site. Therefore, the scope being evaluated for this study is an integration of all site risk contributors.

1.4 Assumptions and Limitations

Some key limitations and assumptions for this PRA include the following:

- The plant is operating within its regulatory requirements.
- The design, construction, and operation of the plant are adequate and satisfy the plant's established design, construction, and operation criteria.
- Plant aging effects are not modeled; that is, constant equipment failure rates are assumed.

The Level 3 PRA study is intended to be as complete and realistic as is practical; however, the scope and level of realism will be balanced against resource and schedule limitations. Therefore, not all aspects of the study will necessarily receive the same level of analytical rigor, which will be a function of their relative risk significance. In addition, examples of some PRA technical elements that will not be addressed in the current study, but which are good candidates for further research to advance the state-of-the-art, include:

- Aqueous transport and dispersion of radioactive materials
- Effects of aging on structure, system, and component reliability

[7] SECY-00-0077, "Modifications to the Reactor Safety Goal Policy Statement," March 30, 2000.
[8] SECY-12-0110, "Consideration of Economic Consequences within the U.S. Nuclear Regulatory Commission's Regulatory Framework," August 14, 2012.

- Consequential (linked) multiple initiating events for a single unit (e.g., seismically induced fires and floods)
- Digital instrumentation and control, including software

As indicated earlier, the staff intends to use the currently available suite of PRA standards (e.g., the ASME/ANS PRA standard) and other NRC and industry guidance documents to guide many of the technical aspects of this study.

DRAFT

2. Approach

2.1 Project Organization

This project evaluates the risk from different sources, different hazards, and different reactor operating modes. Given the broad scope of this project, there are several options for how to develop the overall probabilistic risk assessment (PRA) model. For example:

- The model can be developed by first developing the Level 1 part of the PRA model for all risk sources, plant operating states, and hazards, and then developing the Level 2 part, and then the Level 3 (see Figure 2-1).

- The model can be developed by first developing a complete Level 1, 2, and 3 PRA for a specified risk source, plant operating state, and hazard, and then developing the Level 1, 2, and 3 PRA for the remaining risk sources, plant operating states, and hazards (see Figure 2-2).

In order to minimize the time needed to obtain Level 3 PRA risk results, the latter approach above is adopted for this project. As such, a complete Level 3 PRA model (i.e., a combined Level 1, Level 2, and Level 3 PRA model) is initially developed for the reactor, addressing internal hazards for at-power conditions (discussed in Section 12 of this report). Once this Level 3 PRA model is completed, it is then modified and expanded to address external hazards, (discussed in Section 13). The model is then modified and expanded to address low power/shutdown (LPSD) conditions (discussed in Section 14). In parallel and subsequent to developing the reactor PRA models, the complete Level 3 PRA models for the spent fuel pools and dry cask storage are developed (discussed in Sections 15 and 16, respectively). Finally, after completing the Level 3 PRA models for all of the risk sources, the PRA model for the integrated site risk is developed. While this approach results in the need to exercise the Level 2 and Level 3 parts of the model more often, partial Level 3 insights and results are available earlier in the project, and lessons learned can be fed back into the development of the other scope pieces.

Using the above approach, the project is organized into the following stages:

Stage 1: Quantification of the reactor, at-power for internal hazards Level 3 PRA

Stage 2: Quantification of the reactor, at-power for external and other hazards Level 3 PRA

Stage 3: Quantification of the reactor, low-power and shutdown for all hazards Level 3 PRA

Stage 4: Quantification of the reactor for all plant states and all hazards Level 3 PRA

Stage 5: Quantification of the spent fuel pool Level 3 PRA

Stage 6: Quantification of the dry cask storage Level 3 PRA
Stage 7: Quantification of the site risk (i.e., integration of the Level 3 PRA for both reactors, the spent fuel pools, and dry cask storage)

With this structure, Level 3 PRA risk results will be available at Stage 1, without having to wait for the completion of Stage 7.

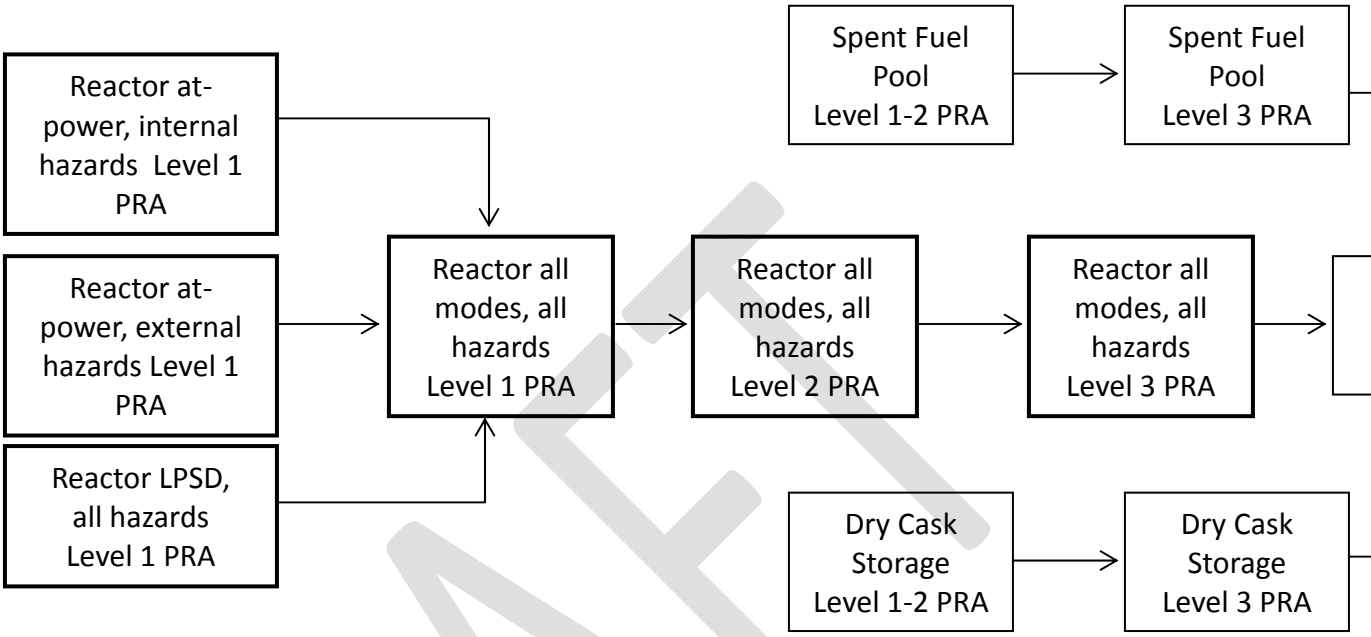

Figure 2-1 Risk Level Approach to Integrated Site PRA

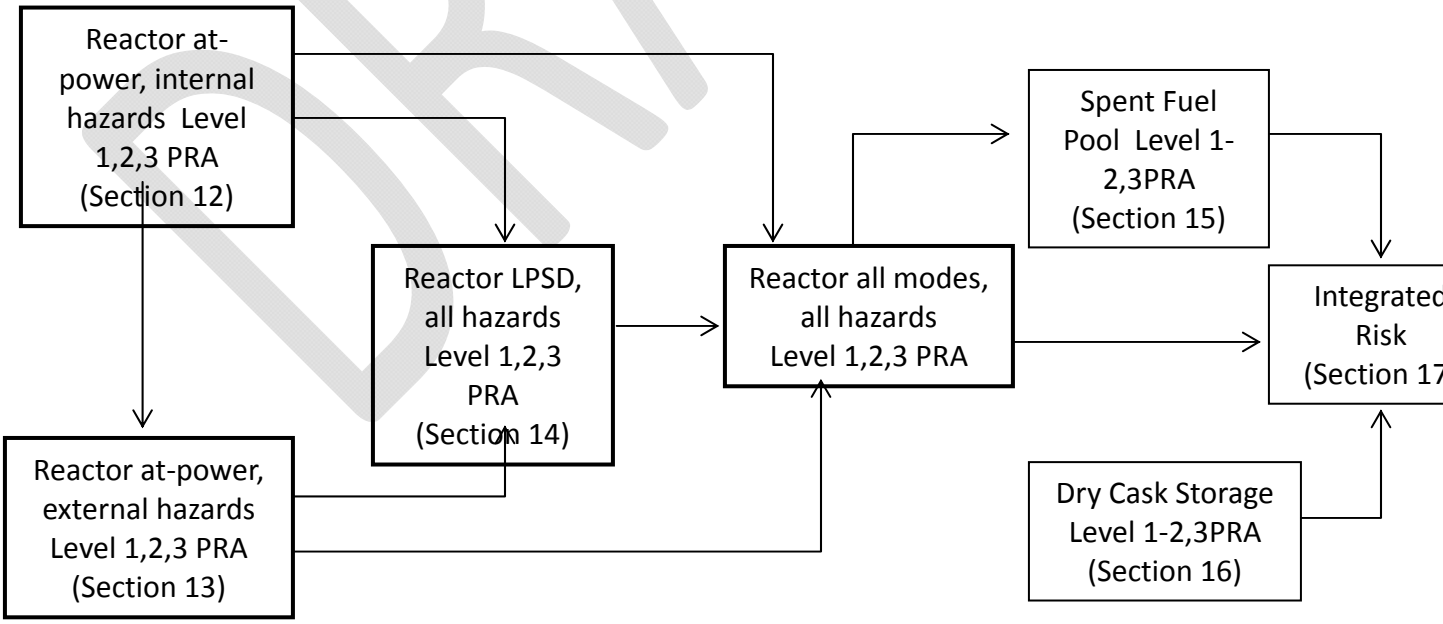

Figure 2-2 Scope Level Approach to Integrated Site PRA

DRAFT

2.2 Overall Approach

Performance of the full-scope site Level 3 PRA study involves an extensive number of technical tasks, and, consequently, the need to obtain or develop numerous models and substantial data. The level of effort to accomplish this work is a function of the amount of information and models already available at the U.S. Nuclear Regulatory Commission (NRC) for the volunteer site and the amount that is obtainable from the licensee. For example:

- The staff has a Standardized Plant Analysis Risk (SPAR) model for internal events for all operating nuclear power plants. SPAR models are in-house PRA models that NRC staff use to support various risk-informed activities. Additional existing information, however, may include an expanded SPAR model that addresses internal fires, external hazards, and/or plant shutdown conditions.

- A PRA developed by the licensee that covers internal events, internal flooding, and, possibly, external hazards.

- A fire PRA developed by the licensee to support transition to NFPA 805.

- A Severe Accident Mitigation Alternatives analysis as part of a license renewal application.

- An updated seismic hazards analysis as part of a Combined License application, a complete or partial MELCOR input deck, and State-of-the-Art Reactor Consequence Analyses (SOARCA) project analyses.

The Level 3 PRA project team will leverage the existing and available information on the volunteer site (i.e., Vogtle), in addition to related research efforts (e.g., SPAR external event modeling, NFPA 805 research, and generic issue evaluations), to enhance the efficiency of the study. The staff will inventory the NRC's information on the volunteer site through consultation with the cognizant staff in the PRA organizations of all NRC Offices, as well as in Offices and Divisions responsible for related technical areas (e.g., seismic events, fire protection, and emergency preparedness) and the Office of Nuclear Reactor Regulation's Division of Operating Reactor Licensing (NRR/DORL) plant project manager.

Correspondingly, initial interactions with the volunteer licensee will focus on determining what relevant information is currently available at the site or at licensee offices.

A technical advisory group (TAG) will be used for the Level 3 PRA project, and will consist of senior technical staff in the area of PRA, and in supporting technical areas (e.g., seismic hazard and plant response), as well as an experienced PRA representative from the Electric Power Research Institute (EPRI). The TAG will meet periodically to: (1) review progress in the development of the Level 3 PRA and (2) provide insight, advice, and guidance on the technical bases, tools, methods, models, and data for the project, as well as on interpretation of the study results and on responding to comments received from the external peer reviews of the study.

This section describes, at a high level, the technical approach to be followed for the full-scope site Level 3 PRA study. A more detailed project plan will be developed after the team assesses

the extent of information and models currently available for the volunteer site, and identifies the scope and nature of the technical work to complete the study. The following subsections address the technical approach philosophy, proposed tools and models, and key challenges and gaps in PRA technology.

2.2.1 Technical Approach Philosophy

Consistent with the objectives of this project, the Level 3 PRA study will generally be based on current state-of-practice methods, tools, and data. As previously stated, "state-of-practice" methods, tools, and data refer to those that are routinely used by the NRC and by licensees and/or have acceptance in the PRA technical community, including regulatory acceptance.

As discussed in SECY-11-0089, the staff performed a scoping study to support the planning and implementation of future Level 3 PRA activities. One of the objectives of the scoping study was to provide insight into the PRA technology to be used for various options for proceeding with future Level 3 PRA activities. To accomplish the objectives of the scoping study, several technical working groups, comprising staff from the NRC's Office of Nuclear Regulatory Research (RES), Office of Nuclear Material Safety and Safeguards (NMSS), Office of New Reactors (NRO), Office of Nuclear Security and Incident Response (NSIR), and NRR were established to address specific Level 3 PRA technical elements that were viewed as particularly complex and challenging.

The state-of-practice methods to be used will be determined by the leaders of each principal technical element of the study in consultation with project leadership, and will consider:

- ASME/ANS PRA standards
- Results of earlier scoping study (documented in SECY-11-0089)
- Interactions with NRC experts in each technical area
- Input from the TAG

2.2.2 Proposed Tools and Models

The staff envisions the use of the following NRC tools and models in performing the Level 3 PRA study:

- Systems Analysis Programs for Hands-on Integrated Reliability Evaluation (SAPHIRE), Version 8
- MELCOR Severe Accident Analysis Code
- MELCOR Accident Consequence Code System, Version 2 (MACCS2)
- Vogtle Units 1 and 2 SPAR model, Version 8.15

SAPHIRE is the NRC's standard software application for performing PRAs. SAPHIRE 8 has an increased capability for handling large, complex modes, and can be used to analyze both internal and external hazards and all plant operating states.

MELCOR is a fully integrated, engineering-level computer code whose primary purpose is to model the progression of postulated accidents in both light water reactors and non-reactor systems, such as spent fuel pools and dry storage casks. The MELCOR code is routinely used to perform thermal-hydraulic analysis to determine system success criteria and accident sequence timing, and to inform severe accident progression analysis.

MACCS2 is a general-purpose tool used to evaluate the public health effects and economic costs of mitigation actions for severe accidents at diverse reactor and non-reactor facilities. The principal phenomena considered are atmospheric transport and deposition under time-variant meteorology, short- and long-term mitigation actions and exposure pathways, deterministic and stochastic health effects, and economic costs.

The MELCOR and MACCS2 codes were used in performing the SOARCA project. The SOARCA project involved significant advances in the state-of-the-art accident progression and consequence modeling in MELCOR and MACCS2, respectively. The Level 3 PRA study will take advantage of the modeling advances that occurred as part of the SOARCA project, as well as other current and recent research related to these two codes.

The consequence modeling for the Level 3 PRA study will include consideration of emergency preparedness (EP) response and population movement. To facilitate EP modeling, the WINMACCS code will be used as an interface with MACCS2. WINMACCS is also being upgraded based on experience with SOARCA.

As mentioned previously, SPAR models are in-house PRA models that NRC staff use to support various risk-informed activities. The Level 1 PRA SPAR models address the likelihood of reactor core damage resulting from general transients (including anticipated transients without scram), transients induced by loss of a vital alternating current or direct current bus, transients induced by a loss of cooling (service) water, loss-of-coolant accidents, and loss of offsite power. The SPAR models use a standard set of event trees for each plant design class and standardized input data for initiating event frequencies, equipment performance, and human performance, although these input data may be modified, when necessary, to be more plant-specific. The system fault trees contained in SPAR models are generally not as detailed as those contained in Licensees' PRA models. As part of the Level 3 PRA study, the set of Vogtle SPAR model event trees and fault trees will be expanded, as appropriate.[9] Besides the technical capabilities of these NRC tools, they offer several advantages: they are generally available, the staff is familiar with their use, and, if necessary, the staff has the ability to modify these tools. This latter advantage may be of particular importance in addressing such expanded scope items as multi-unit risk, spent fuel pools, and dry storage casks. One particular advantage to using a SPAR model as the starting point of the Level 3 PRA study is that the staff is familiar with these models and how to modify them, and can leverage the previous effort to develop the model for the volunteer site.

2.2.3 Key Challenges and Gaps in PRA Technology

As discussed previously in the section on project assumptions and limitations (Section 1.4), there are a number of gaps in current PRA technology that will not be addressed in the current study, but which are good candidates for further research to advance the state-of-the-art. However, there are several other gaps in PRA technology and other challenges that will need to be addressed, to the extent practical, in the Level 3 PRA study. The greatest challenges for the Level 3 PRA study are posed by the current limits in the modeling of multi-unit site risk (as opposed to single-unit risk), in spent fuel PRA technology (i.e., for spent fuel pools and dry storage casks), and in human reliability analysis (HRA) for anything other than internal events

[9] While the Level 3 PRA study will use the existing Vogtle SPAR model as the starting point for the Level 1 internal events analysis, the PRA developed as part of this study will be a separate and distinct model. The existing Vogtle SPAR model will continue to be used for risk-informed regulatory activities.

and internal fires. These challenges are briefly discussed below. The general approach to addressing these challenges for the Level 3 PRA study will rely primarily on existing research and the collective expertise of the TAG and contractors, as well as limited new research in a few specific technical areas (e.g., multi-unit risk). Specific research activities, either past or current, that are expected to contribute to the resolution of these challenges are identified in the following discussions.

2.2.3.1 Modeling of Site Risk

In order to evaluate the risk of the entire nuclear power plant (NPP) multi-unit site, the study needs to address all site radiological sources. Most PRAs developed to date do not explicitly consider multi-unit accidents in which initiating events lead to reactor core damage in multiple units at the same site. Current PRA models therefore do not appropriately identify and address dependencies between systems at multi-unit sites, particularly those with highly complex support system dependencies involving systems and subsystems that are shared by multiple units. Such dependencies are also not addressed, as they pertain to spent fuel pools and dry storage casks.

To understand the contribution of these multi-unit and non-reactor effects to the overall site risk, PRA models need to be enhanced to address the following:

- Initiating events common to multiple reactors and/or spent fuel pools and dry casks
- Common or dependent equipment and operator actions between multiple reactors and/or spent fuel pools and dry casks
- Shared stacks, ventilation systems, or other pathways for combustible gases
- Effects of core damage, radiological release, and mitigation actions on operator response (including control room habitability)
- Integrated models for all site radiological sources, including consideration of model end-states, risk metrics, and mission times
- Integrated uncertainty analysis for overall site risk

2.2.3.2 Spent Fuel PRA Technology

Process areas not related to reactor core operations, but that can contribute to nuclear site accident risk, include those associated with on-site nuclear spent fuel handling and storage. Principal risk-related studies that have previously been performed in these areas include a study of the spent fuel pool accident risk at decommissioning nuclear power plants (NUREG-1738), the dry cask storage PRA (NUREG-1864), the Electric Power Research Institute (EPRI) PRA of bolted storage casks (EPRI TR-100969123), and the NMSS dry cask storage and transportation security assessments.

Although tools exist to address the risk of accidents involving spent fuel pools and dry cask storage, they have not been broadly used. Substantial effort will likely be required to address some aspects of spent fuel PRA (e.g., modeling interaction between the spent fuel pool and the reactor during refueling). Additional work will also likely be required in the areas of success criteria determination, HRA, accident phenomena, and source term analysis. Some of these areas are expected to be addressed to some degree as part of the current RES spent fuel pool scoping study.

2.2.3.3 Human Reliability Analysis

There are several state-of-practice HRA methods for addressing operator performance in Level 1 internal events PRA[10] and internal fire PRA.[11] RES is also currently developing an improved HRA approach in response to SRM-M061020,[12] and aspects of this new approach will be used whenever available, consistent with the schedule for the Level 3 PRA project. However, state-of-practice methods do not currently exist for post-core damage and external hazards, or when the reactor is at low power or shut down. Therefore, these areas will require further investigation. Current NRC research into a single model for human reliability[13] may be helpful, depending on the schedule for completing the research vis-à-vis the schedule for completing the Level 3 PRA study.

2.2.3.4 Additional Modeling Issues

There are several other technical elements of this study that may present a challenge, or that may not have a single consensus state of practice, which would require the team to choose, improve, or develop a specific approach. These include:

- Level 2 and Level 3 PRA uncertainty analysis
- Integration of support system initiating event models
- Conditional steam generator tube rupture
- Reactor coolant pump seal loss-of-coolant accident (LOCA) model
- Common-cause failure (CCF) modeling and data
- Complete electric cable raceway database
- Seismic fragilities
- Frequency of external flooding
- Operational data for low power and shutdown plant operating states
- Severe accident progression modeling
- Mission time (for severe accident progression, consequence analysis, and non-reactor radiological sources)

Current research and other activities are already addressing some of these aspects. For example, under a Memorandum of Understanding (MOU), RES and EPRI are currently developing an approach to integrate support system initiating event models into a PRA. Recent research has investigated the risk significance of steam generator tube rupture occurring subsequent to core damage. Those licensees choosing to comply with NFPA-805 need to compile electric cable raceway databases, and some licensees (e.g., Vogtle) that have not elected to follow NFPA-805 may still have compiled full or partial databases as part of other fire PRA or Appendix-R-related efforts. Severe accident progression modeling has been, or is being, addressed through a number of NRC research projects (e.g., SOARCA, the SPAR Integrated Capabilities Modeling project, and the Advanced Level 2 PRA project). The

[10] NUREG-1842, "Evaluation of Human Reliability Analysis Methods Against Good Practices," U.S. Nuclear Regulatory Commission, Washington, D.C., September 2006.
[11] NUREG-1921/EPRI 1019196, "EPRI/NRC-RES Fire Human Reliability Analysis Guidelines," Draft Document for Public Comment, U.S. Nuclear Regulatory Commission, Washington, D.C., July 2009.
[12] Response to SRM-M061020, "Meeting with the Advisory Committee on Reactor Safeguards, 2:30 p.m., Friday, October 20, 2006, Commissioners' Conference Room, One White Flint North, Rockville, Maryland (Open to Public Attendance)," dated November 8, 2006.
[13] SRM M061020, "Staff Requirements - Meeting with Advisory Committee on Reactor Safeguards," dated November 8, 2006 (ADAMS Accession № ML063120582).

SOARCA uncertainty analysis is also underway, and should help to inform the approach for integrating uncertainties into the Level 3 PRA study.

2.3 Approach Summary

A detailed discussion of the approach (i.e., guidance) is provided in the following sections. For each "part" of the PRA, analytical tasks are identified. For each analytical task, the following information is provided:

- The associated high-level objectives of each task and subtask, and technical steps
- Each major assumption and limitation that bounds/defines the scope and level of detail of the task
- The inputs needed for each individual task
- The various technical steps to be performed for each individual task
- The documentation requirements for each individual task
- The various technical elements that interface with each technical element
- A list of references that can and should be used in performing the work

2.4 Quality Assurance

The objective of quality assurance is to ensure that both the technical approach (methods, tools, and data) is acceptable and that implementation (i.e., actual construction of the PRA model) was performed in an acceptable manner. The PRA model will be developed based on established methods, tools, and data, as documented in, for example, consensus standards and guidance documents. For each technical element, an approach will be established, as documented in the subsequent sections of this report. As described in Section 18, the work for each of the technical elements will be subjected to four different types of technical review: the TAG, project self-assessment, independent peer review, and the Advisory Committee on Reactor Safeguards.

DRAFT

3. Overall Technical Approach to a Full-Scope Site Level 3 PRA

The overall technical approach to performing a full-scope site Level 3 probabilistic risk assessment (PRA) involves developing several risk source PRA models (i.e., reactor PRA models, spent fuel pool PRA models, and dry cask storage PRA model). Regardless of whether a PRA model is being developed for a reactor, spent fuel pool, or dry cask storage, or whether the risk level being evaluated is fuel damage, radionuclide releases, or health effects, the general process involves determining the events that initiate the potential accident sequences, understanding how the accidents can potentially progress, and quantifying the consequences of the accidents (as shown in Figure 3-1).

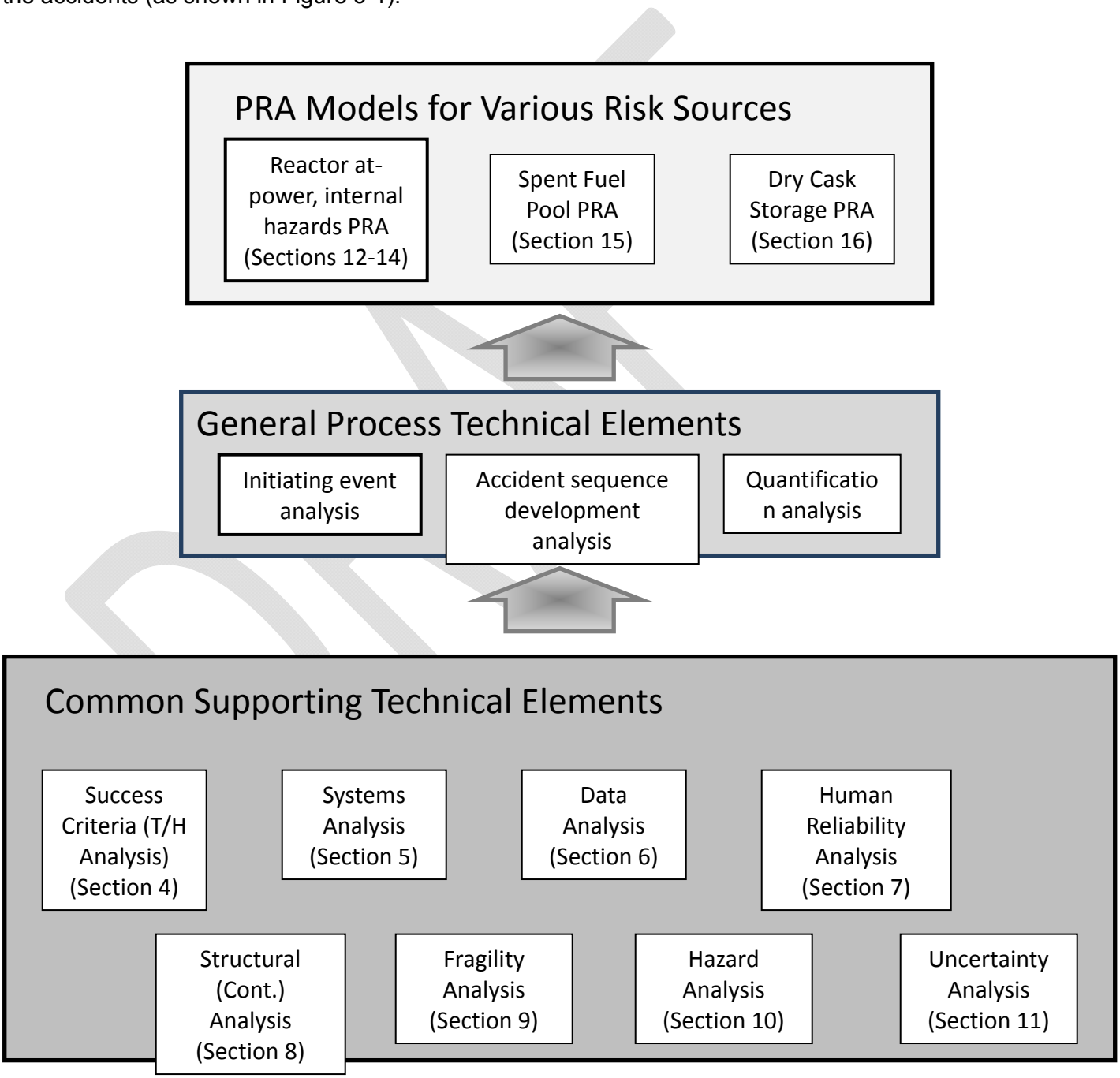

Figure 3-1 Common Elements in Overall Technical Approach

There are, however, specific and unique technical elements associated with accomplishing this general process. There are also specific technical elements that are common regardless of the risk being evaluated. For example, human influence on the accident progression is an aspect of the PRA analysis, regardless of whether the accident is assessed under at-power or LPSD conditions, whether the onset of core damage or core melt is considered, etc. For each of these common supporting technical elements, there is a common method; however, there will be specific considerations when applying it to a specific part of the PRA model. Consequently, the plan discusses these technical elements individually, describing the general method, the general assumption, inputs, interfaces, etc. The specific considerations that apply to each specific application of the method in developing the various scope pieces of the PRA model are discussed in those sections of the plan. Common technical elements include the following:

- Section 4 – Success criteria (thermal-hydraulic) analysis
- Section 5 – Systems analysis
- Section 6 – Data analysis
- Section 7 – Human reliability analysis
- Section 8 – Structural (containment) analysis
- Section 9 – Fragility analysis
- Section 10 – Hazard analysis
- Section 11 – Uncertainty analysis

The various scope pieces of the PRA model are discussed in the following sections:

- Section 12 – Reactor, at-power, internal hazards Level 1,2,3 PRA
- Section 13 – Reactor, at-power, external hazards Level 1,2,3 PRA
- Section 14 – Reactor, at-power, LPSD, internal and external hazards, Level 1,2,3 PRA
- Section 15 – Spent fuel pool Level 1-2,3 PRA
- Section 16 – Dry cask storage Level 1-2,3 PRA
- Section 17 – Integrated site risk PRA

DRAFT

4. Technical Approach for Success Criteria Analysis

Success criteria analysis is a supporting technical element in that it supports the development of the probabilistic risk assessment (PRA) models in several places. Whether as a technical element or as a technical step, success criteria analysis supports the following parts of a fully integrated site PRA:

- Level 1 reactor at-power
- Level 1 reactor low power/shutdown (LPSD)
- Level 2 reactor at-power
- Level 2 reactor LPSD
- Level 1-2 spent fuel pool (SFP)
- Level 1-2 dry cask storage (DCS)

In supporting various parts of the PRA, this element uses a common method; however, it may be implemented differently, depending on the context of the part of the PRA model it is supporting. In this section, the approach described is the common method, and the implementation-specific aspects of the element are described in the part of the plan that it supports.

The term *success criteria analysis* is generally used here to describe both the minimal equipment success criteria and the sequence timing for key operator actions. For instance, the success criteria for feed and bleed during a loss-of-feedwater event include not only the minimal number of emergency core cooling system (ECCS) pumps and power-operated relief valves (PORVs), but also the time by which the operators must have initiated the opening of the PORVs and ensured that the ECCS is injecting.

The success criteria analysis, in general, consists of five interrelated steps:

Step 1 – Establish Base Set of System Success Criteria

Step 2 – Review Underlying Criteria Bases

Step 3 – Identify Criteria with Insufficient Bases

Step 4 – Perform Confirming Computational (Or Other) Analysis

Step 5 – Establish Final Set of Criteria

These steps are discussed in the following sections.

4.1 Assumptions and Limitations

The following is a list of the general and common assumptions and limitations that define the scope and level of detail for this task.

- Success criteria analysis will be limited to determining the system requirements and operator actions in accordance with the Emergency Operating Procedures (EOPs) and the Severe Accident Management Guidelines (SAMGs), in response to and during the sequence of an accident prior to fuel damage and shortly after the onset of fuel damage.

Other system- and component-specific success criteria (e.g., reactor coolant pump (RCP) seal cooling requirements) and operator actions that are not related to EOPs or SAMGs (e.g., time available for isolation of a flood source) are not included.

- The initial set of success criteria will be based on existing information from the Licensee's PRA for those parts that are within its scope. For those parts not covered by the Licensee's PRA, information from other plants or from the results of applicable studies will be used.

- For each of the above, only a limited number (tens, not ones and not hundreds) of plant-specific calculations will be necessary to refine the initial success criteria. The pedigrees of the initial set of success criteria are considered for selecting those that may require more refined analyses. MELCOR will be used for these analyses, with the potential for limited MAAP or TRACE analyses if necessary.

- The MELCOR model being developed for extensive use in the Level 2 PRA will be sufficient—with minor modifications, as needed—to perform Level 1 success criteria analyses (this is more of a resource-sharing consideration than an actual technical concern). The MELCOR SFP model is being developed for extensive use in the SFP PRA[14], and it also will be sufficient—with minor modifications, as needed—to perform Level 1 success criteria analyses.

4.2 Inputs

The design, operation, and engineering information required to perform the associated steps of the success criteria analysis are identified in Table 4-1. Procedures and emergency guidance (e.g., EOP/SAMG) are included under operation, whereas other supporting Licensing calculations fall under engineering. Some of the input information could also be gleaned from other PRA tasks or from the Licensee's PRA models, thereby minimizing any duplication of effort.

[14] Note that two different MELCOR SFP models may be developed: (1) a simplified model for use in success criteria and sequence timing determinations, and (2) a detailed model for accident progression and source term analysis.

Table 4-1. Needed Inputs for Success Criteria Analysis	
Input	Description
Design[1]	• The number of trains and the capacity of each train modeled in the PRA • System actuation conditions for both automatic and manual actuations • Conditions and trip setting for the systems • Engineering parameters for each train to support MELCOR analyses (flows, pressures, discharge head, net positive suction head (NPSH), pump characteristics, coast down curve, actuation timing, environmental operating limits) • Spatial layout, sizing, materials, etc. • MAAP parameter file, and, if available, calculation notes
Operational (Procedures)	• EOP operator actions, operator cues, and time needed to perform the action • SAMG operator actions, priorities, and initiating conditions
Maintenance	• None
Engineering[2]	• A minimal equipment list from the Licensee's PRA, safety analysis report (SAR) Chapter 15, or other references • Equipment qualifications and the potential for their survivability post-accident • Timing of key events associated with the evolution of an accident sequence that could require either an automatic action (e.g., auto switch over to recirculation due to low level in the refueling water storage tank (RWST)) or trigger an EOP action (e.g., refill the Condensate Storage Tank) • Descriptions of the operator actions during accident progression, the step in EOP in which they are called, and the timing associated with performing the actions • SAMG actions, time required to perform the actions, and supporting analysis MAAP runs, or other calculation tools that are used for success criteria determination and to confirm the time that the operators may have to perform an action, are generally necessary.
Note (1) – Much of the above information can be found in the MAAP parameter file, or in the plant's Technical Specifications. Note (2) – The Licensee's PRA is included as a part of engineering input. Most of the information requested would be discussed as a part of the development of the event trees and the accident sequence delineation in the Licensee's PRA.	

DRAFT

4.3 Analysis Steps

The Success Criteria Analysis consists of five interrelated steps:

Step 1 – Establish Base Set of System Success Criteria

Step 2 – Review Underlying Criteria Bases

Step 3 – Identify Criteria with Insufficient Bases

Step 4 – Perform Confirming Computational (Or Other) Analysis

Step 5 – Establish Final Set of Criteria

Step 1 – Establishing Base Set of System Success Criteria

The objectives of this step are (1) to provide a starting point for evaluating the adequacy of the existing information and (2) to provide a starting point for coordination with concurrent activities under the systems analysis and human reliability analysis technical elements.

Using the Licensee's model and the Vogtle Standardized Plant Analysis Risk (SPAR) model (for modes/hazards where a model exists), establish an initial set of system success criteria and sequence timing assumptions. For the remainder of the success criteria that are not available from the Licensee's PRA model or the Vogtle SPAR model, utilize available information from other plants, SAR Chapter 15 analysis results, past studies on SFP, LPSD, and DCS, and engineering judgment to establish an initial set of system success criteria and sequence timing assumptions. The values and bases for these selections should be documented in a preliminary success criteria PRA system notebook.

Step 2 – Reviewing Underlying Criteria Bases

The objectives of this step are (1) to familiarize the analysts with the strengths and limitations of the initial criteria (both in terms of their actual values and their underlying pedigrees) and (2) to create a set of concerns with specific success criteria that warrant further investigation. This examination should consider (1) the strengths and limitations of the methods and tools used to arrive at specific success criteria (e.g., SAR Chapter 15 analysis, MAAP calculations, etc.); (2) whether the end-state definitions[15] and core damage surrogates used are consistent with those used for this project; and (3) whether there are underlying conservatisms or non-conservatisms that could affect the use of the model's results[16]. The following past studies and guidelines should be considered for this examination:

- MAAP4 Applications Guide
- MAAP4/RELAP5 comparison found in the safety evaluation report (SER) in Chapter 19 for the U.S. Evolutionary Power Reactor (EPR) design certification

[15] The U.S. Nuclear Regulatory Commission's (NRC's) current understanding is that the licensee Level 1 end-state is in safe-stable condition at 24 hours, with analysis to 30 hours in some cases to ensure this, with the exception of steam generator tube rupture (SGTR) events, which consider a longer timeframe.

[16] For instance, if results were driven by top cutsets that include failure of emergency diesel generators (EDGs) based on failure of support systems (e.g., Nuclear Service Water Cooling System), and if these failures were treated as failure-to-start instead of failure-to-run, this might be worth further investigation in terms of the timing of core damage (if not the core damage frequency itself).

- NUREG-1738 and NUREG-1864 and other relevant studies by the Electric Power Research Institute (EPRI) on SFP and DCS
- Experience from the Mitigating Systems Performance Index (MSPI) implementation effort and cross-comparison; comparison to success criteria in other 4-loop large, dry SPAR models
- Comparison of the SPAR and licensee success criteria
- NUREG-1953 and Draft Byron NUREG MELCOR analyses
- EPRI TR-1023032 on Loss of Main Feedwater analysis
- Other past NRC studies of relevance (e.g., NUREG/CR-4471, NUREG/CR-5072, and NUREG/CR-6365)
- Industry studies documented in conference proceedings (e.g., 2005 PSA paper by Gabor et al./2009 ICONE paper by LaBarge et al.)

Using the above sources, review the success criteria established in Step 1 and identify the subset of criteria that warrant further investigation.

Step 3 – Identifying Criteria with Insufficient Bases

The objective of this step is to identify those criteria that will need to be confirmed or revised because there is insufficient basis to directly adopt them. Using the results of Step 2, create a list of these criteria (or sequence timing assumptions), and describe what further analysis is needed to confirm or change each item. Reasons for concluding that a particular success criterion warrants further investigation could include:

- The criterion has no codified basis, and is uncertain in light of other information.
- The SPAR and Licensee PRA models disagree.
- The criterion is not consistent with results from more recent studies (e.g., NUREG-1953, EPRI-TR-1023032).
- Success criteria related to SAMG actions, and other success criteria requirements after the onset of fuel damage, that rely on modeling which is uncertain (e.g., MAAP4 calculation involving significant uncovery of the core), and which is uncertain in light of other information.

In addition to identified deficiencies, there may be cases where success criteria are viewed as adequate, but needing additional context for the human reliability analysis (HRA) or systems analysis. For instance, if the PRA were to model the manual start of auxiliary feedwater (AFW) following the failure of an auto-actuation system, the systems analysts would need to know the time available for manual start of AFW. Multiple success criteria may be needed in such cases, since an adequate time for a particular sequence may not necessarily be the same as for other sequences.

The anticipated risk significance of the criterion may play some role in prioritizing the above judgments as well, based on results from the SPAR or Licensee model. Such considerations should be documented, since relative risk rankings will change as the model is further refined. This should also be done with some caution, since low-risk significance in the overall risk profile doesn't mean that the criterion would have low risk-significance if the model were later used for an event or condition assessment.

In some cases this may be MELCOR (or TRACE) analyses, while in others it may be hand calculations, expert judgment, or additional discussion with the licensee.

Step 4 – Performing Confirming Computational (Or Other) Analysis

The objective of this step is to perform computational analysis using the MELCOR (or TRACE) code using a plant-specific input model, or perform other types of analyses, for the subset of criteria that need additional investigation. These analyses are generally expected to fall into the following categories:

- MELCOR analysis
- TRACE analysis
- Hand calculations
- Expert judgment
- Additional discussion with the licensee

It is reasonable to anticipate that MELCOR or TRACE analyses could uncover weaknesses in the models that require updating (i.e., iteration between input model modification and analysis). This common outcome from exercising the models has the effect of extending the amount of time needed for the analysis, and increasing the level-of-effort.

Step 5 – Establishing Final Set of Criteria

The objective of this step is to arrive at a final set of success criteria to be used in the integrated Level 3 PRA. The success criteria resulting from the previous step including their pedigrees will be discussed with PRA analysts. This is done to ensure that the PRA analysts agree that the pedigrees of the success criteria are commensurate with their perceived risk significance. The final set of success criteria and sequence timing assumptions will be fed in to the PRA Notebook and the PRA models. If feasible, documenting how the results of the model were affected by the change would be informative.

4.4 Documentation

The documents generated and compiled from this cross-cutting PRA element correspond to its analysis steps and they are identified below in Table 4-2. These documents are considered to be sufficient for the following objectives:

- Allow an independent analyst to understand how the analyses were performed.
- Facilitate modifications as necessary to maintain an up-to-date PRA model.
- Provide all the information needed for and any other potential peer reviews.

DRAFT

Table 4-2. Documentation Needs for Success Criteria Analysis

• Initial set of success criteria
  o Description of the definition(s) of fuel damage used for reactor core, SFP, and DCS
  o Assumptions related to mission times and end-states (i.e., time-based versus safe, stable state)
  o Success criteria and sequence timing values for the equipment and operator actions by initiating event class that are required to achieve safe end states:
  o Bases for success criteria and sequence timing which include:
  - Plant specific best estimate calculations (Identify the codes or other methods)
  - Plant specific bounding calculations (identify sources)
  - Generic from similar plants (identify references used and the bases for similarity assumption)
  - Use of expert judgment (expert solicitation documentation)
  - Model uncertainty and related assumptions
  o Description of the codes/methods and any related limitations that may challenge its applicability in certain cases
• The process and the basis for selecting the success criteria for performing refined analyses.
• Refined analysis: For computational analyses, this should include a summary of results, as well as tabular and graphical code outputs (akin to NUREG-1953). For hand calculations, this should include a description of the method used and the results. For expert judgment/consultation or additional discussion with the licensee, this should include a description of the interaction(s), any follow-up analysis, and what conclusions were reached.
• Final set of success criteria for PRA use

4.5 Task Interfaces

The various technical steps of Success Criteria Analysis are dependent on other technical elements for information in order for the various steps to be completed. These interfaces are as follows:

- Steps 1, 3, and 5 require information about what human failure events will be modeled in the analysis, which is a product of the Human Reliability Analysis.

- Step 1 and Step 5 also require information about the construct of the Level 1 event trees which is a product of the Accident Sequence Analysis.

- Step 1 and Step 5 also require information about the construct of the Level 1 fault trees which is a product of the Systems Analysis.

- Step 4 requires the development of a MELCOR model, and it will interface with the Level 2 PRA for the reactor, SFP, DCS, and LPSD.

Various tasks from other technical elements are dependent on products from this technical element. These interfaces are as follows:

- Step 1 and 5 results in the success criteria needed to define the logic of the fault trees which is information required by the Systems Analysis.

- Steps 1 and 4 result in sequence timing information, which is of interest to the development of human error probabilities in the Human Reliability Analysis.

4.6 References

- Level 1 Licensee PRA model, and supporting information (e.g., calculation records)
- Level 1 Vogtle SPAR model
- MAAP Applications Guide
- MAAP4/RELAP5 Comparison found in "Safety Evaluation Report With Open Items for the U.S. EPR," Chapter 19, Subsection 19.1.4.4.2.1, January 15, 2010. (ADAMS Accession No. ML090900119)
- MSPI cross-comparison; bases documents, and other related documentation
- Other 4-loop large, dry SPAR models
- U.S. Nuclear Regulatory Commission, "Confirmatory Thermal-Hydraulic Analysis to Support Specific Success Criteria in the Standardized Plant Analysis Risk Models – Surry and Peach Bottom," NUREG-1953, September 2011.
- U.S. Nuclear Regulatory Commission, "Technical Study of Spent Fuel Pool Accident Risk at Decommissioning Nuclear Power Plants," NUREG-1738, February 2001.
- U.S. Nuclear Regulatory Commission, "A Pilot Probabilistic Risk Assessment of a Dry Cask Storage System At a Nuclear Power Plant," NUREG-1864, March 2007.
- Draft Byron NUREG MELCOR analyses
- Draft NUREG/CR on success criteria figure-of-merit variability, AC recovery time, core damage surrogates and limited MAAP/MELCOR safety margin example comparison.
- Electric Power Research Institute, "Technical Framework for Management of Safety Margins – Loss of Main Feedwater Pilot Application," EPRI TR-1023032, November 2011.
- U.S. Nuclear Regulatory Commission, "Los Alamos Decay-Heat Removal Studies Summary Results and Conclusions," LA-10637-MS / NUREG/CR-4471, 1986.
- U.S. Nuclear Regulatory Commission, "Decay Heat Removal Using Feed-and-Bleed for US Pressurized Water Reactors," NUREG/CR-5072, 1988.
- U.S. Nuclear Regulatory Commission, "Steam Generator Tube Failures," NUREG/CR-6365, 1996.
- Gabor, J and D. True, "Byron and Braidwood Feed and Bleed Analysis Using MAAP4 ," at the American Nuclear Society International Topical Meeting on Probabilistic Safety Analysis, September 11-15, 2005, San Francisco.
- LaBarge, N.E. et al., "Comparison of Thermal Hydraulic Simulations of Beyond Design Basis Events Using the MAAP4 and CENTS Computer Codes," at the 17th International Conference on Nuclear Engineering, July 12-16, 2009, Brussels.

DRAFT

5. Technical Approach for Systems Analysis

Systems Analysis is a supporting technical element in that it supports the development of the PRA model in several places. In supporting various other elements in the PRA, this element uses a common method; however, it may be implemented differently dependent on the context of the technical element it is supporting. In this section, the approach described is the common method, the implementation specific aspects of the element are described in that part of the plan; that is, under each specific technical element.

The objectives of the Systems Analysis are to identify and quantify the causes of failure for each plant system represented in the PRA, such that (1) system-level success criteria, mission times, time windows for operator actions, and assumptions provide the basis for the system logic models as reflected in the model, (2) human errors and operator actions that could influence the system unavailability or the system's contribution to accident sequences are identified for development as part of the HRA element, (3) different initial system alignments are evaluated to the extent needed for calculation of CDF and Level 2 inputs, and (4) inter-system dependencies and intra-system dependencies including functional, human, phenomenological, and common-cause failures that could influence system unavailability or the system's contribution to accident sequence frequencies are identified and accounted for.

5.1 Assumptions and Limitations

The following are a list the general and common assumptions and limitations that define the scope and level of detail performed for this task.

- Partial components performance is considered a component failure (e.g., partial opening of a valve).
- Failure to run is only modeled for the defined mission time.
- For a fluid system, a line is not considered to be a diversion path if it is equal to or smaller than 1/3 the size in diameter of the main path.
- Only intra-system common cause is modeled, inter-system common cause is not modeled.
- Others????

5.2 Inputs

The design, maintenance, and operational information required in order to perform the associated steps of Systems Analysis are identified. The information needed to perform each step, at a minimum, is listed below in Table 5-1:

Table 5-1. Inputs Needed for Systems Analysis	
Input	Description(1)
Design	• The functional relationships among the SSCs including both functional and hardware dependencies. • The normal and emergency configurations of the SSCs. • The automatic and manual (human interface) aspects of equipment initiation, actuation, operation, as well as isolation and termination. • The SSC's capabilities (flows, pressures, actuation timing, environmental operating limits). • Spatial layout, sizing, and accessibility information related to the credited SSCs.
Operational	• That information needed to reflect the actual operating procedures and practices used at the plant including when and how operators interface with plant equipment as well as how plant staff monitor equipment operation and status. • That information needed to reflect the operating history of the plant as well as any events involving significant human interaction.
Maintenance	• That information needed to reflect planned and typical unplanned tests and maintenance activities and their relationship to the status, timing, and duration of the availability of equipment. • Historical information related to the maintenance practices and experience at the plant.
Engineering	• The design margins in the capabilities of the SSCs. • Operating environmental limits of the equipment. • Expected thermal hydraulic plant response to different states of equipment (such as for establishing success criteria).
Note 1 Much of the above information can be gathered and is confirmed via plant walkdown and personnel interviews.	

5.3 Analysis Steps

A PRA of the Vogtle plant has been performed for the reactor Level 1 and 2 for internal hazards for at-power conditions. For that part of the overal site PRA model, it will start with the existing Vogtle PRA model. The steps described below pertain to performed given no previous model exists. How these steps are accomplished given a previous model exists is discussed in that part of the site PRA model.

Systems Analysis consists of three interrelated steps:

Step 1 – System Familiarity

Step 2 – System Components and Failure Modes

Step 3 – System Logic Model

These steps are described below; however, for more detailed guidance, see the ASME/ANS RA-Sa-2009 PRA standard.

DRAFT

Step 1 – System Familiarity

The objective of this step is to develop a good understanding of the system operation, the operation of the system components, and the effects of component failure on system success. How the system operates under normal and abnormal conditions and its dependencies with other plant systems is necessary in order to build a logic model that depicts the various pathways for system functional failure.

Sources of information are reviewed to identify the composition and configuration of the system. The requirements for system operation under both normal and abnormal (e.g., emergency) conditions are identified. Conditions (e.g., high room temperature) are identified for successful system performance. System dependencies are a major aspect of system familiarity. A system may fail to function because it is dependent on another system which has failed to function. Support system-to-support system and support system-to-frontline system dependencies are identified, along with a comprehensive set of explanatory notes that describe the functional relationship between systems and system trains is developed.

The majority of system understanding can be derived from system notebooks, system operating instructions, normal and emergency operating procedures, piping and instrumentation diagrams, plant layout diagrams, etc. However, the documented information will not provide all the needed information (e.g., actual accessibility of a component) and there can be discrepancies between documented information and the actual design. Consequently, plant walkdowns are performed as part of the system familiarity. These walkdowns involve (1) tracing the system from its source to its end point, and (2) interviewing plant personnel on the operation and maintenance of the system. See Section 5.2 for a complete description on needed plant information.

Step 2 – System Components and Failure Modes

The objective of this step is to identify those component comprising the system which will be included in the system model and then to identify the potential failure modes for each component. The system will be comprised of components whose function is not needed under emergency conditions; that is, their failure will not prevent the system from functioning and can be screened from the system model. For those components not screened, identification of their failure modes is important in both constructing the system model, but understanding what data is necessary to reflect the component performance.

Screening criteria are used to identify those system components or component failure modes that can be screened from the analysis and do not need to be included in the system model. Examples of criteria include:

- Failure probability of component is two orders of magnitude lower than the highest failure probability of other components in the same system train.
- Failure mode probability is less than 1% of the total failure probability of that component.
- Components in a pathway that is not a flow diversion pathway.
- Components whose function does not affect the emergency function of the system.

Another “component” comprising the system is the human. The associated human events are identified along with their potential failures. These human failure events (HFEs) should include

those that can cause the system or component to be unavailable when demanded and those expected during the operation of the system or component. (See Section 7 for additional detail).

For each component, identify the potential failure modes. These could include random failures, human failure, or common cause failures.

Step 3 – System Logic Model

The objective of the step is to construct the logic model (i.e., fault tree) for each system to be included in the PRA model. In constructing the logic models, an undesired state of the system is specified, and the system is then analyzed in the context of its environment and operation to find all the credible ways in which the undesired state could occur. The logic model is a graphic representation of the various combinations of events that would result in the occurrence of the predefined undesired event.

In constructing the system model, the system boundary and component boundaries are defined. The developed pathways are based on the success criteria developed in Section 4. The systems models are developed to a level of detail supported by available data in order to quantify the system failure probability and to include the identified system/component dependencies. System models are developed either to:

- Quantify support system initiating events.
- Quantify accident sequences.

The logic models are based on the components and failure modes identified in Step 2.

5.4 Documentation

The system functions and boundary, the associated success criteria, the modeled components and failure modes including human actions, and a description of modeled dependencies including support system and common cause failures, including the inputs, methods, and results are documented. The details of this documentation are identified below in Table 5-2. The documentation (along with the identified inputs, Section 5.2) should be sufficient such that it allows an independent analyst to understand how the analysis was performed and to reproduce the results.

DRAFT

Table 5-2. Documentation Needs for Systems Analysis
• System function and operation under normal and emergency operations. • System model boundary. • System schematic illustrating all equipment and components necessary for system operation. • Information and calculations to support equipment operability considerations and assumptions. • Actual operational history indicating any past problems in the system operation. • System success criteria and relationship to accident sequence models. • Human actions necessary for operation of system. • Reference to system-related test and maintenance procedures. • System dependencies and shared component interface. • Component spatial information. • Assumptions or simplifications made in development of the system models. • The components and failure modes included in the model and justification for any exclusion of components and failure modes. • A description of the modularization process (if used). • Records of resolution of logic loops developed during fault tree linking (if used). • Results of the system model evaluations. • Results of sensitivity studies (if used). • The sources of the above information, (e.g., completed checklist from walkdowns, notes from discussions with plant personnel). • Basic events in the system fault trees so that they are traceable to modules and to cutsets. • The nomenclature used in the system models.

5.5 Task Interfaces

The various technical steps of the Systems Analysis are dependent on other technical elements for information in order for the step to be completed. These interfaces are as follows:

- Success Criteria: This element identifies the systems that are necessary to mitigate the effects of the initiating event and therefore will need to be included in the development of the PRA model. This element also establishes the high level logic of the system logic model.

- Data Analysis: The component failure estimation or system initiating event frequencies used to quantify the systems models comes from the Data Analysis element.

- Human Reliability Analysis: Human failure events are taken into account in the system models which also provide feedback to the HRA.

5.6 References

- American Society of Mechanical Engineers, “Standard for Level 1/Large Early Release Frequency Probabilistic Risk Assessment for Nuclear Power Plant Applications,” ASME RA-Sa-2009, 2009.

- U.S. Nuclear Regulatory Commission, Regulatory Guide 1.200, “An Approach for Determining the Technical Adequacy of Probabilistic Risk Assessment Results for Risk-Informed Activities,” Revision 2, March 2009.
- U.S. Nuclear Regulatory Commission, “A Guide to the Performance of Probabilistic Risk Assessments for Nuclear Power Plants,” NUREG/CR-2300, January 1983.

DRAFT

6. Technical Approach for Data Analysis

Data Analysis is a supporting technical element in that it supports the development of the PRA model in several places. In supporting various other elements in the PRA, this element uses a common method; however, it may be implemented differently dependent on the context of the technical element it is supporting. In this section, the approach described is the common method, the implementation specific aspects of the element are described in that part of the plan; that is, under each specific technical element.

The objectives of the Data Analysis are to provide estimates of the parameters used to determine the probabilities of the basic events representing equipment failures and unavailabilities modeled in the PRA, such that: (1) parameters appropriately reflect that configuration and operation of the plant, (2) component or system unavailabilities due to maintenance or repair are accounted for, (3) uncertainties in the data are understood and appropriately accounted for.

6.1 Assumptions and Limitations

The following are a list the general and common assumptions and limitations that define the scope and level of detail performed for this task.

- The data for the Level 3 PRA of Vogtle will be a mixture of generic data and plant specific data.
- Generic data will typically be used if the current plant PRA uses generic data or for data needs not currently analyzed in the plant PRA (e.g., dry cask storage).

6.2 Inputs

The inputs required in order to perform the associated steps of Data Analysis are identified below. This information should allow an independent analyst to reproduce the various results. The information needed to perform each step, at a minimum, is listed below in Table 6-1:

DRAFT

Table 6-1. Inputs Needed for Data Analysis	
Input	Description
Systems Analysis	• Identify from the Systems Analysis the basic events for which probabilities are required. • Establish definitions of SSC boundaries, failure modes, and success criteria in a manner consistent with corresponding basic event definitions in Systems Analysis for failure rates and common cause failure parameters. • Establish boundaries of unavailability events in a manner consistent with corresponding definitions in Systems Analysis.
Probability Model	• Use an appropriate probability model for each basic event.
Generic Information	• Obtain generic parameter estimates from recognized sources.
Plant-Specific Information	• Obtain plant-specific data from appropriate plant sources (e.g., operational and maintenance records).

6.3 Analysis Steps

Data Analysis consists of three interrelated steps:

Step 1 – Determine the most appropriate level, scope, hardware boundary, and specifications for data collection using the results of the Systems Analysis.

Step 2 – Determine the data available for all component parameters to be estimated by aggregating the various sources of generic data.

Step 3 – Identify the sources of plant-specific data to be reviewed, and interpreted for the parameters of interest.

Step 4 – Evaluate the data using the appropriate probability model and evaluate/identify the sources of uncertainty.

Step 1 – Determine the Most Appropriate Level, Scope, Hardware Boundary, and Specifications for Data Collection Using the Results of the Systems Analysis

The objective of this step is to determine what basic event parameters need to be evaluated.

The Systems Analysis performed for the various elements of the PRA will identify all of the parameters for which data (generic or plant-specific) will be needed to determine the appropriate failure rates, failure probabilities (including common-cause failures), test and maintenance unavailabilities, etc. Included in this step is the grouping of components (grouped by type and according to the valve) and according to the characteristics of their usage to the extent supported by data).

Step 2 – Determine the Data Available for all Component Parameters to be Estimated by Aggregating the Various sources of Generic Data

The objective of this step is to evaluate the generic data sources for plant parameters that may be needed.

Some examples of these generic sources of data are (as identified in the PRA standard):

- Component failure rates and probabilities: NUREG/CR-4639, NUREG/CR-4550, NUREG-1715, NUREG/CR-6928.
- Common cause failures: NUREG/CR-5497, NUREG/CR-6268.
- NUREG/CR-6823 provided a listing of additional data sources.

Step 3 – Identify the Sources of Plant-Specific Data to be Reviewed, and Interpreted for the Parameters of Interest

The objective of this step is to determine the plant-specific data available and evaluate its suitability for use in the PRA.

Operational and maintenance records should review reported failures on plant components should be tabulated, including: the cause of failure, how the failure was detected, the plant's condition, the repair time, and the effects of the failure on the plant. To quantify the failure probability, the following information is also needed: the number of times the component is used or challenged, the number of similar components at the plant, the test and maintenance strategy, and the time period of the collected data.

Step 4 – Evaluate the Data Using the Appropriate Probability Model and Evaluate/Identify Sources of Uncertainty

The objective of this step is to determine the appropriate probability model, calculate the applicable parameter, and determine/evaluate the sources of uncertainty.

The appropriate probability model for each basic event should be used. Examples include: (1) binomial distributions for failure on demand, and (2) Poisson distributions for standby and operating failures. In addition, an appropriate CCF model shall be used, such as: (1) Alpha Factor Model, (2) Basic Parameter Model, (3) Multiple Greek Letter, (4) Binomial Failure Rate. Use of alternate models should be documented in detail.

The sources of model uncertainty and related assumptions associated with the Data Analysis should be identified and documented.

DRAFT

6.4 Documentation

The system functions and boundary, the associated success criteria, the modeled components and failure modes including human actions, and a description of modeled dependencies including support system and common cause failures, including the inputs, methods, and results are documented. The details of this documentation are identified below in Table 6-2. The documentation (along with the identified inputs, Section 6.2) should be sufficient such that it allows an independent analyst to understand how the analysis was performed and to reproduce the results.

Table 6-2. Documentation Needs for Data Analysis
• System and component boundaries used to establish component failure probabilities. • Models used to evaluate each basic event probability. • Sources for generic parameter estimates. • Plant-specific sources of data. • Time periods for which plant-specific data were gathered. • Justification for exclusion of any data. • Basis for the estimates of common-cause failure probabilities, including justification for screening or mapping of generic and plant-specific data. • Rationale for any distributions used as priors for Bayesian updates, where applicable. • Parameter estimate including the characterization of uncertainty, as appropriate.

6.5 Task Interfaces

The various technical steps of the Data Analysis are dependent on other technical elements for information in order for the step to be completed. These interfaces are as follows:

- Systems Analysis: The component failure estimations or system initiating event frequencies used to quantify the systems models comes from the Data Analysis element.

- Human Reliability Analysis: Some human failure events (e.g., LOOP recovery actions) may be based on data evaluated in the Data Analysis element.

6.6 References

- American Society of Mechanical Engineers, “Standard for Level 1/Large Early Release Frequency Probabilistic Risk Assessment for Nuclear Power Plant Applications,” ASME RA-Sa-2009, 2009.
- U.S. Nuclear Regulatory Commission, Regulatory Guide 1.200, “An Approach for Determining the Technical Adequacy of Probabilistic Risk Assessment Results for Risk-Informed Activities,” Revision 2, March 2009.
- U.S. Nuclear Regulatory Commission, “A Guide to the Performance of Probabilistic Risk Assessments for Nuclear Power Plants,” NUREG/CR-2300, January 1983.

DRAFT

7. Technical Approach for Human Reliability Analysis

Human reliability analysis (HRA) is a supporting technical element in that it supports the development of the PRA model in several places. In supporting various other elements in the PRA, this element uses a common, general approach; however, it may be implemented differently dependent on the context of the technical element it is supporting. In this section, the general approach is described. Implementation-specific aspects of performing HRA are described in that part of the plan; that is, under each specific technical element.

Human reliability analysis consists of nine interrelated steps:

- Definition and interpretation of HRA/PRA issue
- Definition of HRA/PRA scope
- Qualitative analysis (i.e., information collection & interpretation, analysis to support quantification)
- Identification and definition of human failure events (HFEs)
- Quantification (both screening and detailed)
- Recovery analysis
- Dependency analysis
- Uncertainty analysis
- Documentation

The above HRA steps are commonly referred to as an "HRA process." The first two steps are performed at the beginning of the analysis. Steps 3-8 are iterative steps that are typically performed throughout the HRA/PRA study until final results have been achieved. HRA step #9 also is performed throughout the analysis but cannot be finalized until other steps in the HRA process are complete.

The HRA process steps given above are based on the following sources:

- NUREG-1921, Joint EPRI/NRC-RES Fire HRA Guidelines
- NUREG-1624, Rev. 1, A Technique for Human Event Analysis (ATHEANA)
- NUREG-1880, ATHEANA User's Guide

Also, to the extent relevant, NRC's HRA Good Practices report (NUREG-1792), NRC's Evaluation of HRA Methods Against Good Practices (NUREG-1842), and other PRA guidance will be used. In addition, NRC/RES' current HRA research activities to address SRM- M061020 (i.e., the IDHEAS project) is adopting a similar set of steps for its process. Finally, the requirements for PRA quality identified in Regulatory Guide 1.200 and the ASME/ANS PRA Standard also will play an important role in how this HRA/PRA is to be performed.

NUREG-1921 (Joint EPRI/NRC-RES Fire HRA Guidelines) provides detailed descriptions for most of the tasks above, representing the current state-of-practice in HRA. However, here are the high level objectives for each step (based on guidance provided in NUREG-1921 and NUREG-1880):

Step 1 – Definition and interpretation of HRA/PRA issue

The objective of the first step is to develop a clear understanding of the issue to be addressed. For example, the issue may be to support an at-power, internal events, Level 1 PRA study.

Step 2 – Definition of HRA/PRA scope

The objective of the second step is to determine the scope of the HRA that will be performed to address the issue defined in Step 1.

Step 3 – Qualitative analysis

The objective of the third step is (1) to understand the modeled PRA context for the HFE, (2) to understand the actual "as-built, as-operated" response of the operators and plant, and (3) to translate this information into factors, data, and elements used in the quantification of human error probabilities.

Step 4 – Identification and definition of human failure events

The objective of the fourth step is (1) to identify operator actions required for the successful mitigation of relevant accident scenarios and (2) to define corresponding human failure events (HFEs) at the appropriate level of detail.

Step 5 – Quantification

The objective of the fifth step is to assign or determine failure probabilities for HFEs included in the PRA model.

Step 6 – Recovery analysis

The objective of the sixth step is to support PRA recovery analysis of dominant cut sets by identifying, defining, evaluating, and quantifying relevant HFEs to add to these cut sets.

Step 7 – Dependency analysis

The objective of the seventh step is to ensure that dependencies among the HFEs in an accident sequence are identified and addressed.

Step 8 – Uncertainty analysis

The objective of the eighth step is (1) to identify sources of HRA modeling uncertainty and (2) to address and/or reflect such uncertainties in a manner consistent with the rest of the PRA model.

DRAFT

Step 9 – Documentation

The objective of the ninth step is to provide traceability of the HRA from the beginning to the end of the analysis.

7.1 Assumptions and Limitations

Most of the assumptions relevant to HRA are typically defined as part of the larger PRA study. For this site-wide, Level 3 PRA study, assumptions for the HRA technical element are primarily associated with a specific PRA level, hazard, or plant operating mode. Consequently, most of the assumptions relevant to HRA will be documented under specific technical elements (e.g., at-power, internal events Level 1 PRA).

However, there are a few general and common assumptions and limitations that define the scope and level of detail performed for HRA. The following are a list of such assumptions and limitations:

- Any PRA performed by the utility for the Vogtle NPP that is planned to be used by the NRC study:
    - With few exceptions, is adequate for the needs of RES' Level 3 PRA study with respect to scope and other study objectives.
    - Meets the ASME/ANS PRA standard requirements for Capability Category II.
    - Has been thoroughly reviewed by a qualified peer review panel.
    - Has few, if any, substantive peer review comments that need to be addressed in the RES Level 3 PRA study.
    - Requires no adjustment to success criteria or timing information (e.g., from thermal hydraulic calculations), resulting in, for example, event tree modifications or changes to HRA quantification results.
    - Includes only human failure events that are supported by formal procedures (or are skill-of-the-craft actions).
    - Is adequately documented such that HRA qualitative analysis is clear and quantification results are traceable.
    - Has addressed all key and relevant performance influencing factors for HRA.
    - Has included an HRA that was performed using methods and approaches suitable for the specific PRA.
    - Has included an HRA that was performed using HRA methods and approaches as they are intended to be used (or alternate approaches are justified).
    - Requires only a few "spot checks" of HRA quantification results to assure reasonableness.
    - Requires **little or no rework** of HRA qualitative and/or quantitative analysis for post-initiator human failure events (HFEs).
    - Requires **no rework** (and no substantive "spot-check" effort) for pre-initiator HFEs.
- Procedures and other formal guidance that supports human failure events exist and are currently being used and trained upon.
- Action locations, equipment, control panels and so forth exist, are currently being used and trained upon (or an acceptable alternative is available for HRA analyst review).

7.2 Inputs

The design, maintenance and operational information required in order to perform the associated steps of HRA are identified in 7-1. Because the various HRA steps are iterative and overlap, some of the minimum HRA information needs listed in Table 7-1 are also iterative. Finally, for the HRA efforts supporting PRA studies that are assumed to be principally review efforts with some minimal independent checks, inputs and information needs will be limited to that which allows the HRA analyst to follow the analysis and reproduce the results.

Table 7-1. Needed Inputs for Human Reliability Analysis	
Input	Description
Step 1: Definition and interpretation of HRA/PRA issue	
PRA type (e.g., hazard, operational mode, etc.)	Immediate need before any analysis can be done
General understanding of human interactions required in PRA model	Some initial ideas needed early on; can be developed along with analysis.
Step 2: Definition of HRA/PRA scope	
Scope, limitations, and requirements for PRA study, including likely initiators and end states.	Immediate need before any analysis can be done.
Step 3: Qualitative analysis	
Inputs required for Step 4	See Step 4.
Inputs required for Steps 5-8	See Steps 5-8.
Step 4: Identification and definition of human failure events (HFEs)	
For each PRA types, hazard, etc., initiating events and likely end states	Immediate need before any analysis can be done.
Initial event trees, success criteria, and system fault trees	Early need before HFEs can be identified and defined.
Plant conditions, timing calculations, etc. associated with accident sequences	Early need before HFEs can be identified and defined.
Relevant plant procedures and instrumentation, initial interviews of plant personnel, initial plant walkdowns	Early need before HFEs can be identified and defined.
Inputs to feasibility assessments, if needed	Early need before HFEs can be identified and defined (particularly relevant for PRA hazards that involve operator actions outside the control room in response to a core melt or LERF accident sequence).
Inputs from specialty disciplines (e.g., fire modeling, circuit analysis)	Early need before HRA product can be

DRAFT

	delivered for certain PRA hazard-specific HFEs (e.g., errors of commission resulting from spurious indications)
Final inputs for of all of the above plus additional inputs to develop timing information (e.g., engineering calculations, JPMs) interviews with plant personnel, simulator observations, plant walk downs, as appropriate	Needed before final products of identified and defined HFEs and HRA quantification can be delivered.
Final inputs from specialty disciplines.	Needed before final products of identified and defined HFEs and HRA quantification can be delivered.
Step 5: Quantification	
All of previous inputs and results of HRA steps, plus additional inputs, as needed.	Need as inputs to initial quantification/screening HRA.
Final versions of all previous inputs and results of HRA steps, plus additional details or inputs, as needed.	Need as inputs to final quantification of HFEs.
Step 6: Recovery analysis	
HFEs in dominant cut sets	Need before non-recovery HFEs can be identified and defined.
All the same inputs as for Steps 3-5	Needed before final products of non-recovery identified and defined HFEs and HRA quantification can be delivered.
Step 7: Dependency analysis	
Results of all previous HRA steps and associated inputs from other PRA tasks, including cut sets.	Need before potential dependencies between HFEs can be assessed.
Inputs to HRA dependency assessment tools.	Dependency assessed and definitions of HFEs adjusted; final quantifications adjusted.
Step 8: Uncertainty analysis	
Results of all other HRA steps and PRA inputs. Additional information collection (distributions or range of timing estimates) may be needed.	Need before uncertainty sources can be identified and uncertainty distributions or error factors developed/assigned.
Step 9: Documentation	

DRAFT

At end of analysis, all inputs	See all other tasks

7.3 Analysis Steps

As noted above, HRA consists of nine (9) interrelated steps:

Step 1 – Definition and interpretation of HRA/PRA issue

Step 2 – Definition of HRA/PRA scope

Step 3 – Qualitative analysis

Step 4 – Identification and definition of human failure events (HFEs)

Step 5 – Quantification (both screening and detailed)

Step 6 – Recovery analysis

Step 7 – Dependency analysis

Step 8 – Uncertainty analysis

Step 9 – Documentation

The following table provides a list of items that need to be documented for each step of the HRA, depending on the PRA type or hazard, and the scope and limitations of the HRA/PRA:

DRAFT

Table 7-2. Documentation Needs for HRA	
Step	Description
1 - Define & interpret issue	Discussion of PRA issue and implications for HRA, especially what existing HRA methods and tools, or existing psychological knowledge base will be relevant to the issue
2 - Define the HRA/PRA scope	Discussion of the scope and limitations of the HRA/PRA, including any assumptions
3 - Qualitative analysis	All "raw" inputs and assessed information needed to support all other HRA steps
4 - Identify & define HFE	For each HFE: (a) basic event identifier, (b) basic event name, (c) guidance on placement of the HFE, (d) supporting information for feasibility assessments, (e) summary of PRA context, relevant procedures, cues, etc.
5 - Quantification	For initial quantification or screening, for each HFE, include: (a) relevant accident sequence(s), (b) other PRA context information, (c) initial feasibility assessment, (d) preliminary assessment of performance-influencing factors, (e) assumptions, (f) HRA quantification method used. For final quantification, for each HFE analyzed using detailed HRA methods, include: (a) relevant accident sequence(s), (b) other PRA context information, (c) additional contextual information (if needed), (d) initial feasibility assessment, (e) assessment of performance influencing factors, (f) assumptions, (g) HRA quantification method used, (h) discussion of how qualitative analysis is represented in HRA quantification method.
6 - Recovery analysis	Same as for Steps 3-5, 7, and 8
7 - Dependency analysis	(a) List of HFEs identified as having potential dependencies and associated accident sequence or cut sets, (b) qualitative assessment of potential dependencies, (c) quantitative results for the assessment of dependencies.
8 - Uncertainty analysis	Depending on the scope and limitations of the HRA/PRA, for each HFE: a list of uncertainty sources, uncertainty distributions or error factors, or other inputs to be determined by the overall PRA.
9 - Documentation	Any and all documentation that allows an independent HRA reviewer perform an independent analysis.

In the paragraphs below, further discussion is provided on each HRA step. However, detailed discussions and guidance are not provided here as adequate and more comprehensive guidance is already provided in published references.

Step 1 – Definition and interpretation of HRA/PRA issue

As described in more detail by NUREG-1624, Rev. 1 and NUREG-1880, the purpose of this first step is to define the objectives of the analysis being undertaken (i.e., why is it being performed). For many past HRA applications, the issue has been to support an at-power, internal events, Level 1 PRA where the focus is principally on:

- A fully-staffed control room with licensed operators, supervisors, STA, and so forth
- Operator response to an initiating events using emergency operating procedures (EOPs) before core melt
- Operator response in the control room with its design, layout, and controlled hazards
- Operator response under the general assumption that control room indications are correct

However, HRA can address other issues, either in support of a PRA or by itself. However, HRA applications for other issues may require a different focus for understanding human behavior, an assessment of different factors affecting human performance, different information collection approaches and limitations, and different HRA tools and methods.

For example, in RES's site-wide, Level 3 PRA effort, the following issues will be addressed that will require an alteration in how HRA is performed:

- At-power, internal fires, internal flooding seismic events, high winds, and other hazards
- Low power and shutdown operations (internal events, fires, etc.)
- Level 2 PRA

Furthermore, while many HRA/PRA studies have addressed nuclear power plant operations, other types of applications have been performed. In this site-wide, Level 3 PRA effort, such additional applications will include:

- Spent fuel handling as part of a dry cask storage PRA
- Spent fuel pool monitoring and maintenance
- Multi-unit risk

Other PRA types and hazards are within the overall scope of the RES site-wide, Level 3 PRA effort. However, at this time, HRA support is not envisioned to be needed for these efforts.

The results of this step will become the basis for the rest of the HRA analysis for a specific PRA type, hazard, etc. Later steps in the HRA will build on this beginning description of how HRA was performed for this particular PRA study. Ultimately, the HRA documentation will include a brief description of how the particular PRA study influenced how the HRA was performed and what was entailed in performing the HRA.

The following is an illustrative, not comprehensive, list of different or new features (that are not wholly independent) of that will need to be addressed by HRA in support of PRA studies beyond at-power, internal events Level PRA:

- Different actions (e.g., spent fuel handling operations that cannot lead to core damage).

- Different performers (e.g., when actions outside the control room are required, field operators are perform these actions at the request of control room operators).

- Different decision makers (e.g., for Level 2 PRA when Severe Accident Management Guidelines (SAMGs) and similar procedures are used, decision making is expected to be performed by the Technical Support Center personnel rather than control room operators).

- Different procedures (e.g., fire response procedures or other procedures that have not been demonstrated, validated, training upon, or human-factored to the extent that EOPs have - resulting in different reliability in their implementation).

- Different procedure implementation (e.g., multiple procedures may be in use or how a specific procedure is to used is different - for example, SAMGs are intended to be used differently than EOPs).

- Different training and experience (e.g., some actions may have never been performed or never performed realistically, especially those associated with Level 2 or external hazards PRA and, in general, ex-control room actions).

- Different staffing (i.e., for events that require activating a fire brigade and/or manual operator actions, the amount of staff and their responsibilities may be different than for at-power, internal events Level 1 PRA; events that effect the entire site also be has this concern when considering of multiple units).

- Different performance environment (e.g., instead of the controlled environment of the main control room and its well-human factored interfaces, actions may need to be performed in locations where less well designed panels and equipment need to used and/or poor lighting, heat, smoke, radiation, and so forth can be important impacts on operator performance).

Step 2 – Definition of HRA/PRA scope

As stated in NUREG-1624, Rev. 1, "[t]his step limits the scope of the analysis by applying the issue defined in Step 1 and, if necessary for practical reasons, further limits the scope by setting priorities on the characteristics of the event sequences." Also, the overall PRA study may establish these limitations. Further discussion is given in NUREG-1624, Rev. 1 and NUREG-1880.

For the purposes of this HRA/PRA study, the overall site-wide Level 3 PRA study has specific goals that may limit the scope of the HRA/PRA. For example, this study intends to make substantial use of the utility's existing at-power, internal event Level 1 PRA and at-power, fire Level 1 PRA, rather than developing all of its own analyses. Instead, reviews of the existing PRAs and spot-checks of results are expected to be bulk of the effort for at-power, internal events and fire HRA/PRAs. Also, if the objectives of this study can be satisfied without development of detailed, plant-specific information, certain existing information (e.g., timing information) may be used by the HRA/PRA.

Step 3 – Qualitative analysis

As described above, the objective of the third HRA step is (a) to understand the modeled PRA context for the HFE, (b) to understand the actual "as-built, as-operated" response of the operators and plant, and (c) to translate this information into factors, data, and elements used in the quantification of human error probabilities.

NUREG-1921 states that "[q]ualitative analysis is an essential part of an HRA although not always explicitly identified as a separate step in the HRA process…A sound qualitative analysis allows the HRA to provide feedback to the plant on the factors contributing to the success of an operator action and those contributing factors to the failure of an operator action. Because the qualitative analysis provides a foundation for **all** steps in the HRA process, it is recommended that [guidance for performing it] be read early in the HRA process, and be revisited as needed throughout the HRA." Further guidance on performing qualitative analysis can be found in NUREG-1624 Rev. 1.

The specific activities supporting qualitative analysis for this study cannot be completely anticipated, especially when the HRA must address new features inherent to operational modes and PRA hazards that have not been addressed fully before. However, the guidance on qualitative analysis in NUREG-1921, especially, provides a level of prescription and formalism that can be used as a basis for this study. Overall, the qualitative analysis is expected to follow this general plan:

- Collect and evaluate information with respect to required actions and decision making, performed, performance environment, performance aids, and so forth, especially if the HRA is in support of a PRA type other than at-power, internal event Level 1 PRA. The goal of these activities is to understand the operations and operators sufficiently to make informed choices on using existing HRA methods or behavior models, psychological literature or other tools to represent the actions and associated influencing factors.

- Collect and evaluate information with respect to required actions and decision-making, performed, performance environment, performance aids, and so forth in order to support development human failure events to place in the PRA model. The large PRA study is expected to provide certain key contextual information (e.g., success criteria for relevant plant functions including the timing by which actions must be performed).

- Collect and evaluate information with respect to actions to determine if they are "feasible" per definition in NUREG-1921. Feasibility initially may be evaluated with crude estimates for timing for a "go/no-go" determination. Later, as more information is collected by the HRA analyst and/or the larger PRA study, the feasibility assessment will be refined and re-checked.

- Ultimately, information will need to collected and developed as inputs to an existing HRA methods or other quantification approach.

Further discussion of the inputs and outputs of HRA qualitative analysis, and their documentation, is provided in the discussions of the more traditional HRA products (e.g., identified and defined HFEs, HFE quantification) given below. In addition, certain NRC reports and other publications are expected to guide the HRA, especially the qualitative analysis, for specific plant operating modes or activities (e.g., reports relating to operator performance and HRA in low power and shutdown or in spent fuel handling). These references will be discussed in more detail as part of the relevant PRA task element.

Step 4 – Identification and definition of human failure events (HFEs)

As stated in NUREG-1921, "[t]he objectives of this step are to identify operator (or other human) actions and associated guidance and cues (e.g., procedures and instrumentation) necessary for the successful mitigation of the relevant PRA scenario, and to define the human failure events (HFEs) at the appropriate level of detail to support qualitative analysis and quantification.

The table provided in the **Inputs** section above summarizes the input needs for this step and expected outputs from the HRA task. Further details on how to perform this step are provided in NUREG-1921, supplemented as necessary by NUREG-1880 and NUREG-1624, Rev. 1 (e.g., to address new human activities not previously commonly addressed in HRA/PRA).

Typically, two types of HFEs must be identified as part of a PRA:

- Pre-initiator HFEs that typically represent failures to restore needed systems or equipment to the operable state following testing or maintenance activities.

- Post-initiator HFEs that represent failures of operator actions needed for the successful mitigation of an accident sequence (e.g., operators fail to manually initiate high pressure injection [after automatic actuation failed], operators fail to initiate feed and bleed cooling).

First, HFEs are identified by the associated operator actions that need to be represented as failed events in the PRA. Then, the HFE can be defined, typically including:

- A short description of the HFE that will be used to label the basic event in the PRA

- A basic event identifier for the HFE that is developed using whatever naming scheme or conventions have been established for the PRA

- A more detailed description of the HFE that is developed through qualitative analysis and, ultimately, provides the necessary inputs to HRA quantification (e.g., differentiations in the timing of operator actions that have an impact on subsequent plant behavior and operator actions)

The effort and activities required for the identification and definition of HFEs will vary with the type of PRA. For the more traditionally performed PRA types (e.g., at-power, internal events Level 1 PRA), the effort is usually aided by a list of previously defined and modeled HFEs that can be re-used with little modification. In such cases, HFEs may be initially identified and defined in other PRA tasks (e.g., accident sequence analysis, systems analysis). The HRA analyst must verify these HFEs are appropriately defined and placed in the PRA model. In addition, the HRA analyst is likely to identify and define additional HFEs as a result of the review of procedures, interviews with operational staff, plant walkdowns, and other information collection activities.

For other PRA types, the HRA analyst and other PRA analysts will be working in parallel and starting “from scratch” to identify and define HFEs. From other PRA tasks, operator actions needed to mitigate the accident scenario will be identified. As for similar HFEs in the at-power, internal events Level 1 PRA, the HRA analyst will need to verify the appropriateness of

associated HFEs. Similarly, the HRA analyst will identify and define additional HFEs as the result of information collection and interpretation activities (e.g., procedure reviews). For some PRA types (e.g., low power and shutdown, dry cask storage), these HFEs may include human-induced initiating events as well as pre-initiators and post-initiators.

There is limited guidance on the topic of new HFE identification and definition. The most recent and comprehensive guidance is provided in the first report on ATHEANA (NUREG-1624, Rev. 1). This report provides a systematic process for HFE identification and definition, including written guidance and a series of tables (i.e., Table 9.6 through 9.8) that direct the HRA analyst (often in conjunction with other PRA tasks) in performing the following activities:

- Identify whether a specific plant function is needed or undesired for the specific event tree or accident scenario.
- Identify the system(s) or equipment that perform the function.
- Identify the pre-initiator status of the system(s) or equipment.
- Identify the functional failure modes of the system(s) or equipment.
- Determine if errors of omission, errors of commission, or both error types are relevant to the PRA issue and accident scenario.
- Identify possible operator actions for relevant functional failure modes of the system(s) or equipment that can be further developed into HFEs.

Another important HRA activity for PRA types other than at-power, internal events Level 1 PRA is the demonstration of operator action feasibility. As discussed in Section 4.3.2 of NUREG-1921, operator actions that are guided by emergency operating procedures (EOPs) in at-power, internal events (before core melt) can be assumed to be feasible because of the extensive industry efforts to verify and validate their feasibility through, for example, vendor testing and plant-specific demonstrations in actual or simulated events. However, operator actions that are taken in other plant operational modes, of different PRA hazards, and/or without the support of EOPs cannot be assumed to be feasible. Therefore, the HRA analyst must perform feasibility assessments for such operator actions. Although feasibility assessments are considered part of qualitative analysis (as is done in Section 4 of NUREG-1921), an initial “go/no-go” feasibility assessment must be performed during HFE identification and definition to determine if the HFE can be credited in the PRA model. Feasibility criteria identified in NUREG-1921 for fire PRA will used as a template or starting point in the development of similar criteria for other plant operational modes and PRA hazards. The feasibility criteria in NUREG-1921 that must be demonstrated or verified in order to credit an HFE in the PRA model are:

- Sufficient time
- Sufficient manpower
- Available and sufficient cues for action
- Procedural support and training experience
- Accessible location for action performance
- Available and accessible equipment and tools
- Operable systems, equipment, or components

Finally, HFE identification and definition might include specialized events, depending on the PRA type or issue. For example, the chapter in the ASME/ANS PRA Standard that addresses fire PRA requires that the HRA address errors of commission (EOCs) that might result from operators responding to spurious indications (due to fire-damaged cables) as if they are accurate indications. Section 3 of NUREG-1921 provides guidance on how to screen out

possible EOCs to those required by the PRA Standard. Similar approaches may be required for other HFEs for yet-to-be-identified needs for PRA types and hazards within the scope of the site-wide, Level 3 PRA study.

Step 5 – Quantification (both screening and detailed)

As stated above, the objective of the fifth step is to assign or determine failure probabilities for HFEs included in the PRA model. In order to support initial quantification, the HRA task may provide screening values or other conservative failure probabilities. In addition, the HRA task may need to identify and describe certain assumptions in other to produce such initial failure probabilities without information from other PRA tasks that have not been completed (e.g., fire modeling, circuit analysis).

In other to support final PRA quantification, the HRA analyst will need to be provided with the list of HFEs that appear in dominant cut sets. These HFEs will be analyzed using detailed HRA quantification methods, as appropriate. The table above illustrates the kinds of inputs that are required for detailed HRA quantification and the products of such quantification.

For both initial and detailed HRA quantification, the HRA quantification tools should be identified, and the qualitative analysis inputs should be tied and justified to the way in which the quantification tool is used. As stated in NRC's *Good Practices for Implementing Human Reliability Analysis* report (NUREG-1792), the understanding of the operator actions and associated performance influences gained in performing the qualitative analysis should guide the analyst in selecting an HRA quantification method, as well as being used to develop inputs for the quantification tool. As noted in the discussion of qualitative analysis, there must be a significant effort devoted to understanding the operator actions (i.e., operational aspects of the PRA study). Such plant-specific operational understanding is critical to selecting the appropriate HRA quantification tool and developing appropriate inputs to the quantification method.

For the purposes of this site-wide, Level 3 HRA/PRA study, existing HRA quantification methods will be used to the extent applicable. However, many of the PRA hazards, operating modes, and activities represent, for example, actions, consequences, decision-makers, action aids, and performance environments that are completely outside the intended use of existing HRA methods. Consequently, it is expected that other, as-yet undeveloped approaches will need to be used, to the extent that such development can be done within the scope and schedule of this site-wide, Level 3 HRA/PRA effort. Examples of tools and approaches that might be used are:

- Existing qualitative analyses of human performance in the relevant contexts (e.g., low power and shutdown, spent fuel handling) with some extension to a quantitative or semi-quantitative HRA approach.

- Existing HRA quantification approaches that are flexible or unbounded in the performance influencing factors that can be addressed, typically coupled with an expert elicitation approach for HRA quantification (e.g., SLIM-MAUD, ATHEANA).

- Results of current HRA research activities (e.g., (i.e., the IDHEAS project that currently is addressing SRM- M061020).

- Understanding gleaned from relevant psychological literature on human behavior (confined to that which is considered “professional,” “expert,” and other similar labels), especially for rare and serious situations (for example, works by James Reason, Gary Klein, Emily Roth, and David Woods are expected to be relevant and helpful).

Step 6 – Recovery analysis

Existing reports (e.g., NUREG-1921) already describe how HRA for recovery analysis is to be performed. Generally, the need for recovery events (both hardware and human) are identified by the accident sequence analyst after quantification (but not initial quantificaiton). The HRA analyst should define such human failure events following the same guidance as that relevant for Step 4 (Identification and Definition), including feasibility assessments, as appropriate or relevant. Similarly, HRA quantification should be performed as described under Step 5, with special attention to potential dependencies between recovery HFEs and other HFEs in the sequence, especially with respect to time available, staffing, additional cues, and other resources.

Except for limitations imposed by the PRA scope, it is expected that recovery analysis will be performed the same way for all PRA types, hazards, etc. Any further discussion that is needed will be provided under each specific technical element.

DRAFT

Step 7 – Dependency analysis

Except for limitations imposed by the PRA scope, it is expected that the identification of sources of potential dependencies will be performed the general same way for all PRA types, hazards, and activities. In some cases, particular HRA methods have their own approach to dependency analysis but many applications use the approach presented in the THERP method.

For some of the specific PRAs (e.g., fire Level 1 PRA), there are expected to be more HFEs represented in cut sets due to a higher number of manual operator actions. As a result, the dependency analysis for HRA can be more complicated than for at-power, internal events Level 1 PRA). Further discussion of such differences is provided under specific technical element. NUREG-1921 provides some additional information, including how this step might involve more effort for PRA hazards that involve more operator actions.

Step 8 – Uncertainty analysis

Uncertainty analysis for the HRA task will be performed in manner consistent with other tasks performed for this overall site-wide, Level 3 PRA study.

Sources of uncertainty will be identified and inputs for quantification will be developed as required by the overall study. Table 6-2 of NUREG-1921 provides a list of potential sources of HRA uncertainty that are generally applicable (i.e., not fire-specific). Most existing HRA methods use error factors defined by the THERP HRA method. However, there are others (e.g., ATHEANA) which develop uncertainty distribution directly through their quantification processes. Except for limitations imposed by the PRA scope, it is expected that uncertainty analysis will be performed the same way for all PRA types, hazards, and activities. However, if differences needs to be identified, this discussion will be given under each specific technical element.

Step 9 – Documentation

In general, the HRA task will conform to the documentation requirements of the larger, site-wide Level 3 PRA study. Documentation will be provided such that another HRA analyst can follow and understand the assumptions, interpretation of information in to HRA quantification inputs, and HRA results. NUREG-1921, NUREG-1880, and NUREG-1624 provide some additional discussion.

7.4 Documentation

The products produced as a result of the HRA task are identified below. These products (along with the identified inputs, Section 7.2) should be sufficient such that it allows an independent analyst to understand how the analysis was performed and to reproduce the results. Consequently, the list of products include both interim and final products, as well sub-products which may differ for different PRA hazards, operational modes, and so forth.

The major products of the HRA task are:

- Identified and defined PRA events that are associated with actions, decisions, and other human activities

- Failure probabilities or other quantification results associated with human-related PRA events
- Qualitative analysis that supports and justifies products #1 and #2
- Documentation of all products above

The first HRA product corresponds with the results of HRA step #4 and associated qualitative analysis performed in HRA step #3. This HRA product is developed early in the PRA study but is typically refined and revised throughout the analysis until final results have been achieved. However, as part of HRA steps #6 and #7 (recovery and dependency analysis), new human-related PRA basic events also will need to be developed and refined.

This first HRA product includes a basic event name (using whatever conventions have been decided for the PRA study), a basic event description (which establishes the tie between human activity and the plant function, system, or component failure modeled in the accident sequence), and guidance from the HRA analyst on the placement of the basic event in the PRA model. Associated qualitative analysis results for HRA product #1 include:

- Human actions, decisions, or other activities associated with the HRA events
- Specific plant personnel who are responsible for the actions, decisions, or other activities represented in the event
- PRA contextual elements (e.g., initiator, accident sequence, details on plant conditions, timing of plant conditions, success criteria for accident sequence, timing requirements for human activities, PRA end states for the accident sequence)
- Feasibility assessments to justify crediting the event in the PRA (see NURG-1921)
- Specific locations for human activities and the associated job aids, tools, environmental hazards, and so forth for those locations
- Relevant procedure(s) and procedure steps
- Relevant instrumentation or other cues for human activities
- Communication and coordination requirements

The second HRA product corresponds with the results of HRA steps #5 (quantification) and #8 (uncertainty analysis), but also involves steps #6 and #7 (recovery and dependency analysis, respectively). Specifically, this HRA product includes failure probabilities, or other quantitative or semi-quantitative values, that are assigned to each human-related PRA basic event and uncertainty analysis results (e.g., failure probability distributions, error factors) required by the PRA study. These results need to be developed for basic events identified and defined in Step #4, or as part of recovery analysis (Step #6). Also, HRA quantification results will need to be refined or modified, as appropriate, to address potential dependencies between human-related basic events in cut sets. In all cases, the HRA quantification method or tool also must be identified. The associated qualitative analysis for HRA quantification includes all of the results listed above, but usually described, developed, and supported by more detailed information.

7.5 Task Interfaces

HRA is a supporting task to almost all of PRA technical elements regardless of the plant operating mode, PRA hazard, or PRA type. However, the specific interfaces between the HRA task and other PRA tasks will vary depending on the scope of the PRA effort and its specific operator action modeling needs. The discussion below is general (rather than specific to a particular PRA type or hazard).

The various technical steps of the HRA are dependent on other technical elements for information in order for the step to be completed. These interfaces are as follows:

- Steps 1 and 2 (i.e., Definition and interpretation of HRA/PRA issue and Definition of HRA/PRA scope) require a description of the PRA issue to be addressed (e.g., which PRA hazard and end state consequences) and of the PRA scope, including assumptions.

- Step 4 (i.e., Identification and definition of HFEs) requires inputs from various parts of the overall PRA, depending on the PRA type, hazard, and so forth. In particular, PRA event trees and fault trees are required inputs for the HRA analyst's review for appropriate HFE definition and placement in the PRA model.

- Steps 3, 5, 6, and 7 (i.e., Qualitative Analysis, Quantification, Recovery analysis, and Dependency analysis) require details of the PRA scenario (e.g., success criteria - both timing and equipment requirements, timing of plant behavior) which is typically developed as a product of the accident sequence analysis technical element.

Various tasks from other technical elements are dependent on products from HRA. These interfaces are as follows:

- Steps 4 and 6 (i.e., Identification and definition of HFEs and Recovery analysis) result in defined HFEs and guidance on their appropriate placement in the PRA model which is information required by the accident sequence and systems analysis technical elements.

- Steps 5, 6, and 7 (i.e., Quantification, Recovery analysis, and Dependency analysis) result in the development of human error probabilities (HEPs) that are assigned to the HFEs in the PRA model, principally required by the accident sequence analysis, systems analysis, cut set review, and PRA quantification technical elements.

- Step 8 (i.e., Uncertainty analysis) results in error factors or other uncertainty and sensitivity analysis inputs associated with HFEs in the PRA, which is information required by the PRA quantification technical element.

DRAFT

7.6 References

Here is an initial list of references that can and should be used in performing the work of the technical element:

- USNRC and EPRI, *EPRI/NRC-RES Fire Human Reliability Analysis Guidelines*, NUREG-1921, July 2012.
- USNRC, *A Technique for Human Event Analysis (ATHEANA)*, NUREG-1624, Rev. 1.
- USNRC, *ATHEANA User's Guide*, NUREG-1880, June 2007.
- USNRC, *Good Practices for Implementing Human Reliability Analysis (HRA)*, NUREG-1792, April 2005
- USNRC, *Evaluation of HRA Methods Against Good Practices*, NUREG-1842, September 2006.
- Swain, A.D., and H.E. Guttmann, *Handbook of Human Reliability Analysis with Emphasis on Nuclear Power Plant Applications* (THERP), NUREG/CR-1278, 1983.
- USNRC, *An Approach for Determining the Technical Adequacy of Probabilistic Risk Assessment Results for Risk-Informed Activities,* Regulatory Guide 1.200, Rev. 2, March 2009.
- ASME/ANS RA-Sa-2009, Addenda to ASME/ANS RA-S-2008, *Standard for Level 1/Large Early Release Frequency Probabilistic Risk Assessment for Nuclear Power Plant Applications,* The American Society of Mechanical Engineers, New York, NY, February 2009.
- Embrey, D.C., P. Humpherys, E.A. Rosa, B. Kirwan, and K. Rea, *SLIM-MAUD: An Approahc to Assessing Human Error Probabilities Using Structured Expert Judgment,* NUREG/CR-3518, 1984.
- Reason, J., Human Error, Cambridge University Press, New York, NY, 1990
- Reason, J., *Managing the Risks of Organizational Accidents,* Ashgate Publishing Limited, 1997.
- Reason, J., *The Human Contribution - Unsafe Acts, Accidents, and Heroic Recoveries*, Ashgate Publishing Limited, 2008.
- U.S. Nuclear Reguatory Commission, *Staff Requirements Memorandum - Meeting with Advisory Committee on Reactor Safeguards,* SRM M061020, November 8, 2006.
- Klein, G., *Sources of Power - How People Make Decisions,* MIT Press, 1998.

DRAFT

8. Technical Approach for Structural Analysis

Structural analysis is a supporting technical element in that it supports the development of the PRA model in several places. In supporting various other elements in the PRA, this element uses a common method. However, it is generally implemented differently depending on the context of the technical element that it is supporting.

Typically, structural analyses support the calculation of demands in structures, systems and components (SSCs) as well as the assessment of damage states of SSCs for use in various technical elements of the PRA. As an example, dynamic structural analyses use ground motions derived in the seismic hazard analysis to calculate seismically-induced demands on SSCs for Level 1 reactor at-power PRA for seismic hazards. Dynamic or nonlinear structural analyses also quantify building loads and damage states of structures and components needed for the calculation of structural fragilities for use in Level 1 reactor at-power PRA for seismic hazards as well as damage states of spent fuel structures for use in the SFP PRA. In the case of Level 2 reactor at-power PRA for internal hazards, static and dynamic nonlinear structural analyses quantify containment damage states under either static or dynamic containment pressurization for subsequent use in the development of containment fragilities under internal pressurization.

Clearly, the specific structural analysis techniques, level of detail, complexity of structural methods and accuracy of the structural analysis will differ markedly in its implementation for the various technical elements in the PRA and for different sub-elements of a given technical element. This section only provides those aspects of the technical approach that are common among all technical elements of the PRA. The section does not provide a breakdown of specific structural analysis approaches, techniques and approximations for each technical element of the PRA other than by the use of a few examples to illustrate specific steps of the approach.

8.1 Assumptions and Limitations

The following is a list the general and common assumptions and limitations that define the scope and level of detail performed for this task.

- The complexity and details of the structural analysis models can vary for the various technical elements that it supports and for different applications within a technical element depending on the acceptable uncertainties in the results in relation to the other uncertainties in the technical element or sub-element.

- The complexity and details of the structural analysis models will depend, in part, on the number of statistical simulations that may need to be performed in order to estimate probabilities of various damage states and adequate demand statistics.

- The complexity and details of the structural analysis models should be commensurate with the details, completeness and reliability of available as-built structural information.

- As-built information on SSCs of interest, rather than information accounted for in the design, can and should be used in the structural analysis when available.

- It is assumed that design and construction drawings with the relevant structural information will be available or will be provided by the licensee.

- To the extent possible the structural analysis uses actual statistical data on the material properties for the various structural materials use in the plant structures and, if site-specific data is not available, generic information and information from other sites from other sources will be used with justification to estimate statistics of relevant structural material properties.

- State-of-the-practice structural analysis methods will be used and adapted for the needs of each technical element.

- Structural models and analysis already conducted by the licensee will be assessed, reviewed and relied upon to the maximum extent possible if deemed applicable and if available in a manner compatible with the schedule for the Level 3 PRA study. If resutls of analysis by the licensee, for example for the licensee's own reactor at power PRA for seismic hazards, are not available in the time frame of the study, recourse to existing analyses results will be done with justification.

8.2 Inputs

This section addresses design, maintenance and operational information required to perform the associated steps in the Structural Analysis element. Table 8-1 is a list of the minimum information needed for the structural analysis task.

DRAFT

Table 8-1. Needed Inputs for Structural Analysis	
Input	Description(1)
Design and as-built data	• List of safety-related structures for which structural analyses will be performed. Examples of items to be included in this list are seismic Category I structures, structures housing mitigation (B5B) equipment, storage tanks, pipe runs between buildings, and water intake structures. The contents of the list vary depending on the PRA element of interest. For the structures and components in this list the following inputs are needed: • Overall plant layout, description of structures and design reports, in addition to the information in the Final Safety Analysis Report (FSAR). • Structural drawings with location and geometries of structural components to permit a complete understanding of load paths, response mechanisms leading to damage states, and construction of three-dimensional finite element models. • Reinforcement schedules for walls, slabs, beams and columns. Details of prestressing for the containment structures. • Steel detailing drawings for steel structures. • Drawings showing details of support structures, foundations and anchorages for storage tanks including field erected tanks. • Material specifications and nominal material properties for all structural materials of interest such as concrete strengths, steel reinforcement yield and ultimate stress, structural steel yield and ultimate stress. • Tests of material properties for all structural material properties of interest, including assessments of current material properties if made and available. • Foundation drawings with structural and geotechnical details. • Site soil conditions to include: geologic data on site; soil configurations (e.g. layering, horizontal variability, soil types and soil index properties); subsurface exploration information (e.g. boring information); and ground water data. • Static and dynamic soil properties from in-situ field tests and laboratory data. Examples include dynamic bearing capacities, penetration resistances, densities, and friction angles.
Modeling and Analysis	• Structural models and soil-structure-interaction models referred to in the FSAR and other studies such as the Individual Plant Examination (IPE) submittal. • Structural models and soil-structure interaction models being developed or already developed by the licensee for their current PRA studies. • Results of relevant structural analyses performed or being performed by the licensee. This includes results referred to in the FSAR, studies such as the IPE, and ongoing PRA studies.
Inputs from other elements	• Identification and definition of structural damage parameters of interest. For the structures and components in the list of safety-related SSCs for a given PRA element, identify and define the damage states of interest and related damage indices that can be related to structural response results. This process includes agreement on approach for the calculation of those structural damage • Structural loads of interest. In the case of Level 1 reactor at-power PRA for seismic hazards this includes ground motion response spectra (GMRS) for the site, and sets of ground motion time-histories (in three-directions) for dynamic structural analyses including soil-structure interaction analysis. In

Table 8-1. Needed Inputs for Structural Analysis	
Input	Description(1)
	the case of Level 2 reactor at-power PRA for internal hazards this includes static containment internal pressures and temperatures (with time) inside the containment, and dynamic loads (pressures) time-histories for events associated with burning of combustible gases. • For the PRA elements involving seismic hazard, strain levels imposed on the foundation soils as needed for soil-structure-interaction analyses, for each seismic bin.
(1) – Some of the above information would be confirmed or gathered though a plant visit or plant walkthru. An essential element of such plant visits should be meetings with plant and licensee structural and component analysts/engineers. The plant visit should also inform about as-built conditions that may not be available in design drawings or reports but might contribute to the actual capacity of structures and components.	

8.3 Analysis Steps

The common technical approach for structural analysis consists of the following interrelated steps:

Step 1 – Define the structural response results needed

Step 2 – Assess available information

Step 3 – Define the structural modeling and analysis type

Step 4 – Obtain and verify as-built structural data

Step 5 – Development of structural analysis models and structural analysis simulations

Step 6 – Documentation

Step 1 – Define the structural response results needed

The objective of this step is to define the structural response results of interest. Results of interest for Level 1 reactor at-power PRA for seismic hazards include (1) seismic demands for components and systems mounted at various locations in the plant's structures and expressed in terms of in-structure response spectra (ISRS) and (2) structural response and damage, if any, for safety-related structures and components. For Level 2 reactor at-power PRA for internal hazards, examples of results of interest are estimates of leakage areas expressed in terms of the containment internal pressure.

A clear definition of the structural response of interest will require interaction with the interfacing PRA elements. In the case of Level 1 reactor at-power PRA for seismic hazards, the ISRS would be used in conjunction with fragility functions for components and systems to estimate probabilities of failure for these components and systems for a given seismic bin. Interaction with the fragility analysis task is also needed to determine how these results should be expressed in terms of the ground motions at the site for a given seismic bin. Interaction is also needed to identify the ISRS statistics to be calculated for use in conjunction with the fragility data. This affects the number of structural simulations to be performed which in turns influence the level of detail that is feasible for the structural analysis models involved.

Step 2 – Assess available information

The objectives of this step for each technical element are:

- To review the applicability and adequacy of the available structural information in relation to the structural results to be calculated. This part includes determining the availability of design and construction drawings and information on actual statistics of structural material properties. Included in this objective is assessing the existence and availability of structural analysis models and structural analyses already performed or being performed by the licensee.

- To review and assess modeling and analyses already performed or being performed by the licensee and their applicability. Part of this assessment will address the availability, in relation to the schedule for the Level 3 PRA project, of these modeling and analyses. Results of this assessment and the timely availability of these results will affect the content of subsequent steps, namely steps 3 to 5, and may require the use of other existing analysis results or simplified approaches.

- To assess inputs for the structural analysis in terms of the demands on structures to be provided by interfacing tasks. In the case of Level 1 reactor at-power PRA for seismic hazards this task will include an assessment of ground motion information that would be provided by the interfacing seismic hazard task. In the case of Level 2 reactor at-power PRA for internal hazards this task would include assessing pressure and temperature time-histories from the accident progression analysis as well as dynamic loads from combustible gases.

Step 3 – Define the structural modeling and analysis type

The objectives of this step are:

- To define the level of detail and complexity of the structural models.
- To establish the level of accuracy required for the structural analyses.
- To select the structural analysis codes to be used for the analysis (when needed).
- To define the statistical simulation or sensitivity analysis approaches to be used in conjunction with the structural analysis.

Given the type of results needed by the structural analysis and their use, this step will establish the level of complexity and detail of the models to be used, the accuracy of the structural analyses and the type of statistical simulations or sensitivity analyses that will need to be executed in order to provide the necessary information for the interfacing tasks. It also will establish the structural analysis codes to be used for the analysis. Products of this task will be specific to the technical element that the task is supporting. The task will take into consideration the quality and type of data available, the uncertainties of the structural analysis in relation to the uncertainties in the interfacing tasks, and the availability of resources and scheduling requirements in reaching its objectives.

As an example, in the case of Level 1 reactor at-power PRA for seismic hazard detailed three-dimensional shell finite element structural models of containment and auxiliary buildings may not be needed for the ISRS calculation. Instead, verified and validated simplified three-dimensional finite element models called stick models may be used for the dynamic structural

analyses for ISRS calculation and for related soil-structure interaction analysis. Soil-structure-interaction analysis, which is needed for this site, requires site-specific geotechnical data including the anticipated soil strains derived from the seismic hazard task as well as information on the design of the building foundations.

For the Level 2 reactor at-power PRA for internal hazards, current practice uses three-dimensional, nonlinear finite element models of the containment structure that include details of reinforcement, presetressing and liner as well as major containment openings to calculate liner strains from which to estimate leakage areas. Current practice also complements such models with simpler analytical modeling, for verification and other purposes, and with three-dimensional finite element models of major penetrations or hatches as needed. Depending on the potential for localized dynamic pressures from the burning of combustible gases three-dimensional finite element models of reactor cavities may be necessary.

If structural models and analysis have already been performed or are being performed by the licensee, the work in the task may include the development of confirmatory models to verify the adequacy and suitability of the licensee's models and results for the Level 3 PRA project. The approach for the structural analysis task is to rely on models and results produced by the licensee to the maximum possible extent, provided that the models and results have been reviewed and deemed adequate by the NRC staff.

Step 4 – Obtain and verify as-built structural data

The objective of this step is to obtain as-built structural analysis information for the plant structures and components. To the extent possible, as-built structural and current information instead of design information should be used in the structural analyses. As-built structural and current structural information includes:

- Material properties, the models should use material properties as close as possible to the actual structural properties and, account for aging effects on increased concrete strength.

- Structural elements that might not have been credited in design calculations and may not be present in design drawings but are present in the actual structures. An example would be steel shapes embedded in concrete that might have been part of the construction formwork.

- Structural alterations made over time and consideration of change in material properties with time.

- Current condition of structures, such as anchorages for liquid-storage tanks and heavy equipment, as observed in a walkthru of the facility.

Step 5 – Development of structural analysis models and structural analysis simulations

The objectives of this step are:

- Development of structural models, which includes definition of appropriate loads, based on the results of Steps 1 to 4 above.
- Conducting the structural analysis simulations as determined in Steps 1 to 4 above.

- Post-process and collect the results of the structural analysis simulations in the manner necessary for the interfacing tasks.

Step 6 – Documentation

The objective of this step is to aggregate the documentation, inputs, assumptions, modeling and analysis techniques chosen with the justification for their selection, and results for each step. This step also involves compiling and documenting the information for task and its steps in a manner consistent with the database for the Level 3 PRA project.

8.4 Documentation

The products produced as a result of the task are identified below. These products (along with the identified inputs, (Section 8.2) should be sufficient for an independent analyst to understand how the analysis was performed and to reproduce the results. Consequently, the list of products includes both interim and final products. Table 8-2 provides the expected products.

Table 8-2. Documentation Needs for Structural Analysis
• List of damage indices to be calculated by the structural analysis for each PRA element. Description of the relationship (quantitative) between the damage indices and the damage states of interest for the PRA element. Approach and assumptions relating structural damage indices to quantities of interest (e.g. leakage rates) for the PRA element of interest. • Description of the assumptions and method for the calculation of the damage indices using structural analysis. This includes a justification of the approach used in relation to the criteria described in Section 8.1. It also includes a description of the software used for the analysis, as applicable. • Description of the analysis models (actual input files used for the final runs will be part of the archived information). • Description of the main structural results with supporting data. This includes quantitative and graphical representations of the relevant structural response parameters. • Interfaces with other PRA elements - For each PRA element provide the response results of interest for the element. Typically, these results would be values of the damage indices to be used in conjunction with fragility calculations. • Provide the products in a manner suitable for incorporation in the database for the Level 3 PRA study.

8.5 Task Interfaces

The technical elements that interface with task element are:

- Level 1 reactor, at-power PRA for seismic hazards
- Seismic hazard analysis

- Fragility analysis
- Level 2 reactor PRA, at-power for internal events
- Quantification of spent fuel pool PRA
- Quantification of the dry cask storage PRA

Depending on the hazards and level of detail for other elements of the entire PRA, there may be interfaces between the structural analyses and these elements. These elements may include:

- Level 1 reactor, low-power and shutdown for all hazards
- Level 3 aspects that would involve evacuations that would be affected by infrastructure damage from seismic events

Level 1 reactor, at-power PRA for seismic hazards: Structural analyses use seismic ground motions from the seismic hazard analysis to calculate seismic demands on safety-related SSCs mounted in various locations and structures in the nuclear power plant. These demands are then used in the Level 1 reactor, at-power PRA for seismic hazards in conjunction with fragility information to calculate probabilities of failure for those SSCs. For Level 1 reactor, at-power PRA for seismic hazards, structural analysis results are also used in conjunction with fragility information to calculate probabilities of failure for safety-related structures in the nuclear power plant for the various seismic bins.

Seismic hazard analysis: Dynamic structural analysis for Level 1 reactor, at-power PRA for seismic hazards requires as input ground motions for the site that are a result of the seismic hazard analysis and related site amplification analyses for the site. The seismic hazard task provides the load inputs for the structural analyses in terms of the ground motions at various depths and locations through the plant in a manner. Close coordination will ensure that the structural methods used are consistent with the manner in which ground motions at each one of these locations and depths can be provided by the structural analyses and still capture the uncertainties in their characterization. The seismic hazard analysis task includes seismic amplification studies that assess effects of local site conditions on the ground motion and also provide mechanical, strain-dependent properties for the foundation soils that are an input for dynamic soil-structure interaction analyses in the structural analysis task.

Fragility analysis: Fragility analysis for structures and various components and systems requires the use of structural analysis to calculate damage states for these SSCs given input ground motions for a given seismic bin. In addition, ISRS calculated using dynamic structural analyses are also used in conjunction with fragility information for components and systems to estimate probabilities of failure for these components for a given seismic bin. This dependency requires defining the fragility functions in a manner that is consistent with the demands provided by the structural analyses.

Level 2 reactor PRA, at-power for internal events: Structural analysis calculates the performance of containment structures in terms of leakage areas under internal pressurization and temperature load histories from the accident progression analyses. Interfacing with this element also will include establishing a list of SSCs for which structural analysis will be necessary and provide the load types (static or dynamic) and their characterizations. Interfacing with this element and the fragility analysis element also will establish the type of structural response parameters of interest and the types of structural analysis modeling and analysis adequate for each SSC of interest.

Quantification of spent fuel pool PRA: Structural analysis quantify damage states for spent fuel structure and other spent fuel cooling systems that are necessary to calculate the spent fuel performance and condition for, for example, a given seismic bin. Damage data needed for the quantification of the spent fuel pool PRA is used in Step 1 of the technical approach for the structural analysis element to define the scope of the structural analyses needed for the spent fuel pool PRA.

Quantification of the dry cask storage PRA: Structural analysis results may also be needed to provide inputs to the dry cask storage PRA for accidental drops or drops that might be caused by seismic events. The degree to which structural analyses will be needed for this element will depend on the extent to which results from prior PRAs or from analyses already being produced by the licensee can be relied upon. Interfacing with this element will depend on the hazard that the element will consider (e.g. seismic hazards) and whether their assessment will require structural analyses.

8.6 References

The following is a partial list of technical reports, technical articles, regulatory guides and standards that can and should be used in performing this task. The emphasis is on structural analysis approaches used in conjunction with risk assessments or with beyond-design-basis accidents.

- VEGP, “Final Safety Analysis Report (FSAR) - Vogtle Electric Generating Plant, Revision 15,” April, 2009.
- VEGP, “Vogtle Electric Generating Plant Individual Plant Examination Submittal,” Georgia Power, December 23, 1992. (Volume 1 and Volume 2) (Also response to NRC Requests for Additional Information)
- VEGP, “Vogtle Electric Generating Plant Unit 1 and Unit 2 Individual Plant Examination of External Events Submittal 0,” Georgia Power, November 1995 (Volume 1 and Volume 2) (Also response to NRC Requests for Additional Information)
- NRC, “Staff Evaluation Report of Individual Plant Examination of External Plant (IPEEE) Submittal on Vogtle Electric Generating Plant, Units 1 and 2,” Nuclear Regulatory Commission (NRC), December 2000.
- NRC, “Staff Evaluation Report of Individual Plant Examination (IPE) Submittal on Vogtle Electric Generating Plant, Units 1 and 2,” Nuclear Regulatory Commission (NRC).
- NRC, “An Approach for Determining the Technical Adequacy of Probabilistic Risk Assessment Results for Risk-Informed Activities,” RG 1.200, Revision 2, March 2009.
- NRC, “Containment Structural Integrity Evaluation for Internal Pressure Loadings Above Design Basis Pressure,” Regulatory Guide 1.216, August, 2010.
- Spencer, B.W., J.P. Petti, and D.M. Kunsman, 2006, “Risk-Informed Assessment of Degraded Containment Vessels,” NUREG/CR-6920, SAND2006-3772P, Sandia National Laboratories, Albuquerque, NM.
- Smith, J.A., 2001, “Capacity of Prestressed Concrete Containment Vessels with Prestressing Loss.” SAND2001-1762, Sandia National Laboratories, Albuquerque, NM.
- Cherry, J.L. and J.A. Smith, 2001, “Capacity of Steel and Concrete Containment Vessels with Corrosion Damage.” NUREG/CR-6706, SAND2000-1735, Sandia National Laboratories, Albuquerque, NM.
- Tang, H.T., R.A. Dameron, and Y.R. Rashid, 1995, “Probabilistic Evaluation of Concrete Containment Capacity for Beyond Design Basis Internal Pressures,” *Nuclear Engineering and Design*, 157, 455-467.

- Hessheimer, M.F., E.W. Klamerus, L.D. Lambert, G.S. Rightley, and R.A. Dameron, 2003, "Overpressurization Test of a 1:4-Scale Prestressed Concrete Containment Vessel Model." NUREG/CR-6810, SAND2003-0840P, Sandia National Laboratories, Albuquerque, NM.
- Dameron, R. A., et al., "Posttest Analysis of the NUPEC/NRC 1:4 Scale Prestressed Concrete Containment Vessel Model," NUREG/CR-6809, March, 2003.
- EPRI, "Methodology for Developing Seismic Fragilities," EPRI Report TR-103959, Palo Alto, CA, June 1994.
- EPRI, "Nuclear Plant Seismic Margin R-1," EPRI Report NP-6041, Palo Alto, CA, August 1991.
- EPRI, "Seismic Fragility Application Guide," EPRI Report 1002988, Palo Alto, CA, December 2002.
- EPRI, "A Method for Assessment of Nuclear Power Plant Seismic Margin," EPRI Report 6041, October, 1988.
- EPRI, "Seismic Evaluation Guidance – Screening, Prioritization and Implementation Details (SPID) for the Resolution of Fukushima Near-Term Task Force Recommendation 2.1: Seismic," EPRI Draft Report, August, 2012.
- Bohn, M.P. et al., "Analysis of Core Damage Frequency: Surry Power Station Unit 1, External Events," NUREG/CR-4550, Vol. 3, Rev. 1, Part 3, December, 1990.
- Lambright, J.A. et al., "Analysis of Core Damage Frequency: Peach Bottom, Unit 2, External Events," NUREG/CR-4550, Vol. 4, Rev. 1, Part 3, December, 1990.
- NRC, "A Performance-Based Approach to Define the Site-Specific Earthquake Ground Motion," Regulatory Guide 1.208, March 2007.
- ASME/ANS, "Standard for Level 1/Large Early Release Frequency Probabilistic Risk Assessment for Nuclear Power Plant Applications," ASME/ANS RA-Sa-2009, New York, NY, 2009.

DRAFT

9. Technical Approach for Fragility Analysis

Fragility analysis is a supporting technical element in that it supports the development of the PRA model in several places. In supporting various other elements in the PRA, this element uses a common method. However, it is generally implemented differently depending on the context of the technical element that it is supporting.

Typically, fragility analyses support PRA elements by providing the means to calculate damage state probabilities for a structure, system or component (SSC) given a hazard input level. As an example, for Level 1 reactor at-power PRA for seismic hazards, the hazard parameter could be peak ground acceleration (PGA), peak ground motion spectral acceleration averaged over a frequency range, in-structure spectral accelerations or others. For the Level 2 reactor at-power PRA for internal hazards, the hazard parameter could be the containment internal pressure calculated for a given accident progression sequence with the containment damage states defined in terms of a set (bins) of leakage areas. In this section, the term fragility analysis refers to the process used to derive or obtain fragility functions or data for SSCs. This process can be accomplished using a variety of methods including analysis, testing, testing and analysis, and collection of existing plant specific or surrogate fragility data. The process also depends on the manner in which SSC damage states can be related to the hazard input level.

Fragility analysis typically require structural analysis inputs to estimate damage states of structures and certain components for various values of hazard parameters or to calculate relationships between hazard parameters, e.g. a PGA, and the loads on components or structures. The fragility analysis task includes both structural fragility analysis and component (and system) fragility analysis for which somewhat different implementations may be used. Fragility analysis frequently separate the uncertainties included in the analysis into aleatory and epistemic uncertainties. This permits assessing the sensitivity of the results to reductions in epistemic uncertainties through the definition of a type of confidence levels associated with the calculated damage probabilities. The need, significance and usefulness of this separation of uncertainties would depend on implementation requirements for specific PRA elements.

Clearly, the specific fragility analysis techniques, level of detail, complexity of the methods used and approximations involved will differ markedly in its implementation for the various technical elements in the PRA and for different sub-elements of a given technical element. This section only provides those aspects of the technical approach that are common among all technical elements of the PRA. The section does not provide a breakdown of specific approaches, techniques and approximations for each technical element of the PRA other than by the use of a few examples to illustrate specific steps of the common approach.

If fragility analysis (which includes generation and collection of fragility data) has already been performed or is being performed by the licensee, the work in the task may include the development of confirmatory reviews to verify the adequacy and suitability of the licensee's analysis and results. The approach for the fragility analysis task is to rely on models and results produced by the licensee to the maximum possible extent, provided that the models and results have been reviewed and deemed adequate by the NRC staff.

9.1 Assumptions and Limitations

The following is a list the general and common assumptions and limitations that define the scope and level of detail performed for this task.

- The complexity and details of the fragility analysis models can vary for the various technical elements that it supports and for different applications within a technical element depending on the uncertainties in the inputs, and the acceptable uncertainties in the results in relation to the other uncertainties in the technical element or sub-element.

- The fragility analysis methods will depend, at least for fragilities derived by analytical methods, on the number of statistical simulations that may need to be performed in order to estimate probabilities of various damage states and adequate demand statistics to be used in conjunction with their use.

- The complexity and details of the fragility analysis models should be commensurate with the details, completeness and reliability of available as-built plant data.

- As-built information on SSCs of interest, rather than information accounted for in the design, can and should be used in the fragility analysis whenever available.

- Plant-specific fragility analysis and resulting data already produced by the licensee will be assessed, reviewed and relied upon to the maximum extent possible if deemed applicable and if available in a manner compatible with the schedule for the Level 3 PRA study.

- To the extent possible, the fragility analysis uses actual statistical data on the material properties for the various structural materials use in the plant structures and, if plant-specific data is not available, generic information and information from other sites from other sources will be used with justification to estimate statistics of relevant structural material properties.

- State-of-the-practice fragility analysis methods will be used and adapted for the needs of each technical element.

- To the extent possible, seismic fragility evaluation should be based on Capability Category II requirements of Section 5-2.2 of Part 5 of the ASME/ANS standard as endorsed by Regulatory Guide 1.200. Exceptions to these requirements for each implementation would depend on the adequacy of the resulting approximations for the PRA element. Unavailability of data may prevent the use of these requirements for certain SSCs for specific implementations in which case the affected components will be identified in the documentation.

- Separation of uncertainties into aleatory and epistemic will depend on implementation requirements for each technical element of the PRA and on the availability of sufficient information for such separation. To the extent possible, all uncertainties would be aggregated into a total uncertainty with exceptions made depending on the requirements of each element implementation.

The task will consider three sources of fragility data as follows:

- Plant-specific fragility developed for the study plant using analysis or testing data, which can be data developed or being developed by the licensee, or data produced by analysis for this study.

- Compilation of site-specific (but not for the study site) data derived from past PRA studies (or margin studies as applicable) including NRC or industry sponsored research projects.

- Generic data mostly developed from qualifying testing data produced by components' manufacturers, independent manufacturers and various government sponsored programs, e.g. Department of Defense (DoD programs).

Plant-specific data for the study plant produced by the licensee will be assessed and reviewed to determine their adequacy and applicability for each element of the PRA. When plant specific fragility data (and related hazard levels) are not available, site-specific (but not for the study site) and generic data will be used with justification. This justification would involve determining the degree to which the generic data are applicable to the plant SSCs.

Fragility functions can be derived by testing and analysis. Analytical methods will usually be used for building structures and other structures such as liquid storage tanks and their anchorages. The fragility of most components in the seismic equipment list (SEL) will likely be qualified by testing. In this case, review of fragility data, especially plant-specific data, will be informed by E.5 in Reference 17 (Electric Power Research Institute (EPRI) report 1002988, "Seismic Fragility Application Guide," issued in 2002).

In the case of Level 1 reactor at-power PRA for seismic hazards, fragility analysis will generally follow the guidance in Reference 19 (EPRI Draft Report, "Seismic Evaluation Guidance – Screening, Prioritization and Implementation Details (SPID) for the Resolution of Fukushima Near-Term Task Force Recommendation 2.1: Seismic," August, 2012). In the case of SSCs qualified by analysis, that guidance recommends the use of the Conservative Design Failure Margin (CDFM) approach as the default fragility analysis approach. If the licensee already derived or is deriving fragility functions using a more rigorous approach, namely the separation of variables approach, that analysis will be reviewed and used if found adequate and if available in a timely manner.

9.2 Inputs

This section addresses design, maintenance and operational information required to perform the associated steps in the fragility analysis task. Table 9-1 is a list of the minimum information needed for the structural analysis task.

Table 9-1. Needed Inputs for Fragility Analysis

Input	Description(1)
Design and as-built data	• List of safety-related structures for which fragility analysis will be done, e.g., a seismic equipment list (SEL) in the case of the Level 1 reactor at power PRA. Examples of items to be included in this list are seismic Category I structures, structures housing mitigation (B5B) equipment, storage tanks, pipe runs between buildings, and water intake structures. The contents of the list vary depending on the PRA element of interest. • For the structures (including foundations) and components in this list the inputs needed are those already listed for the structural analysis task (Section 8).

Table 9-1. Needed Inputs for Fragility Analysis	
Input	Description(1)
	• Results of material properties testing for all structural material properties of interest, including assessments of current (e.g. concrete strength increase with time) material properties if made and available. • Foundation drawings with structural and geotechnical details. • Site soil conditions to include: geologic data on site; soil configurations (e.g. layering, horizontal variability, soil types and soil index properties); subsurface exploration information (e.g. boring information); and ground water data. • Static and dynamic soil properties from in-situ field tests and laboratory data. Examples include dynamic bearing capacities, penetration resistances, densities, and friction angles. • For Level 1 reactor at-power PRA for seismic hazards this would include geotechnical data needed to assess geotechnical damage states such as (1) seismic liquefaction and settlement of soils, (2) foundation sliding, (3) relative building movements, (4) underground piping, (5) intake structures, (6) intake tunnel, and (7) ultimate heat sink. • For the Level 3 reactor at-power PRA fragility data may need to be collected and expressed in a manner consistent with regional seismic hazard for infrastructure facilities that may impact evacuation. These would fragility data of the type used in regional seismic loss estimate programs (e.g. HAZUS) for bridges, roads, emergency command and control facilities and others.
Modeling and Analysis	• Methods used for the fragility analysis for each type of SSC. This includes the methods used for structures (e.g., CDFM or separation of variables (seismic hazards)), and the methods used for components, including components qualified by testing. • Type of approach to be used for each SSC: (1) plant specific, (2) site specific (but not for this plant), and (3) generic data. • For each SSC, collection of uncertainty information, preferably quantitative uncertainty information, to be included in the analysis for each SSCs and whether or not separation of uncertainties into aleatory and epistemic will be included in the fragility analysis.
Inputs from other elements	• Identification and definition of hazard parameter of interest and related structural or component damage indices for the structures and components in the SEL. This also includes identification of demands of interest, e.g. floor spectral accelerations in the case of seismic hazards. • Relevant structural analysis results namely demands and damage statistics. In the case of seismic hazards, this includes in-structure response spectra (ISRS) data, correlations of ISRS values, and value of

Table 9-1. Needed Inputs for Fragility Analysis	
Input	Description(1)
	damage state indices as well as the relation between all of the above and the hazard parameter of interest. In the case of Level 2 for internal hazards this includes liner strains or leakage areas for given internal pressure levels. • Results of relevant structural analyses performed or being performed by the licensee. This includes results referred to in the FSAR, studies such as the IPE, and ongoing PRA studies. • Loads of interest - As an example, in the case of Level 1 reactor at-power PRA for seismic hazards, this includes ground motion response spectra (GMRS) for the site, and sets of ground motion time-histories (in three-directions) for dynamic structural analyses including soil-structure interaction analysis. In the case of Level 2 reactor at-power PRA for internal hazards, this includes static containment internal pressures and temperatures (with time) inside the containment, and dynamic loads (pressures) time-histories for events associated with burning of combustible gases. • For the PRA elements involving seismic hazard, accelerations and strain levels imposed on the foundation soils as needed for soil-structure-interaction analyses, for each seismic bin. This includes seismic loads calculated in the seismic hazards task that would be used to assess fragilities for certain soil and geotechnical failure modes.
(1) – Some of the above information would be confirmed or gathered though one or more plant visit or plant walkdown. An essential element of such plant visits should be meetings with plant and licensee structural and component analysts/engineers. The plant visits should also inform about as-built conditions that may not be available in design drawings or reports but might contribute to the actual capacity of structures and components. This plant visit (or visits) should include component fragility analysts and structural fragility analysts.	

DRAFT

9.3 Analysis Steps

The common technical approach for structural analysis consists of the following interrelated steps:

Step 1 – Selection of SSCs for which fragility analysis will be performed

Step 2 – Define fragility damage states and related hazard input parameters

Step 3 – Assess available information

Step 4 – Define the analysis approach

Step 5 – Obtain and gather input and fragility data

Step 6 – Perform fragility analysis

Step 7 – Documentation

Step 1 – Selection of equipment for which fragility analysis will be performed

The objective of this step is to identify by interaction with the plant response analysts the SSCs for which in fragility analysis will be performed, e.g. the SEL for Level 1 at power PRA. This step would include an initial screening of SSCs based on their generically high capacities or lack of interactions with safety-related SSCs. This step is closely related to Step 5 (Obtain and gather input and fragility data) and would include a plant walkdown.

Step 2 – Define damage states and related hazard input parameters

The objective of this step is to define the damage states and related hazard input parameters. For Level 2 reactor at-power PRA for internal hazards, examples of results of damage states are sets (bins) of leakage areas and the related hazard parameter of interest would be the containment internal pressure. For Level 1 reactor at-power PRA for seismic hazards an example of a damage state is irrecoverable loss of function of a component expressed in terms of a test response spectrum (TRS) and the related hazard parameter could be a PGA. In this case, the relation between the ISRS (required response spectra at the component location) and the PGA at the SSC location may be necessary.

A clear definition of the damage states, related hazard input parameter and methods to relate the damage state to the hazard input level is needed. Interaction with specific PRA elements will provide these definitions. This step also determines the level of approximations acceptable for each fragility function and the statistics of the related hazard input parameters. This includes a preliminary identification of which uncertainties will be included in the fragility analysis and if separation of uncertainties into aleatory and epistemic is required for the specific implementation.

Step 3 – Assess available information

The objectives of this step for each technical element are:

- To review the applicability and adequacy of the available fragility data in relation to the requirements of the specific implementation. This part includes assessing the existence and availability of data or analysis already produced or being produced by the licensee.

- To review and assess licensee data and analyses including plans for data gathering and fragility analysis for their current PRA effort. Part of this assessment will address the availability, in relation to the schedule for the Level 3 PRA project, of licensee's data and analyses. Results of this assessment will affect the content of subsequent steps.

- To assess inputs for the fragility analysis in terms of the demands on structures to be provided by interfacing tasks. In the case of Level 1 reactor at-power PRA for seismic hazards, this task will include an assessment of ISRS data statistics to be provided by the structural analysis task and its relation to the ground motion information provided by the interfacing seismic hazard task. In the case of Level 2 reactor at-power PRA for internal hazards, this task would include assessing statistics of containment leakage areas for varying internal pressure pressures to be provided by the structural analysis.

- Develop a preliminary SSC list for each interfacing PRA element for which fragility analysis will be performed. In the case of Level 1 reactor at-power PRA, this is the SEL.

Section 8.2 of the technical approach for the structural analysis task provides additional information to be assessed in this step.

Step 4 – Define the analysis approach

The objectives of this step are:

- To define, for each implementation and SSC, the fragility analysis approach. Included in this process is the selection of the source of fragility (Section 9.1) and its justification.
- To establish acceptable approximation level requirements for the fragility analyses.
- To define the statistical simulations or sensitivity analysis approaches to be used in conjunction with the structural analysis.

Given the type of results needed and their level of approximation, this step will establish:

- The level of complexity and detail of the models to be used
- The level of approximations in the supporting analyses
- The type of statistical simulations (and sampling techniques) or sensitivity analyses that will need to be executed to obtain the necessary fragility functions and confidence levels (if needed)

It also will inform selection of the structural analysis codes to be used for the analysis. Products of this task will be specific to the technical element that the task is supporting. The task will take into consideration the quality and type of data available, the uncertainties involved in relation to uncertainties in the interfacing tasks, and the availability of resources and scheduling requirements in reaching its objectives.

If fragility analysis (which includes generation and collection of fragility data) have already been performed or are being performed by the licensee, the work in the task would include review fo the licensee's work to verify their adequacy for the Level 3 PRA project. The approach for the

fragility analysis task is to rely on models and results produced by the licensee to the maximum possible extent, provided that the models and results have been reviewed and deemed adequate by the NRC staff.

When plant specific fragility data (and related hazard levels) are not available, site-specific (but not for the study site) and generic data will be used with justification. This justification would involve determining the degree to which the generic data are applicable to the plant SSCs. Initial fragility estimates derived on these bases can be revised when the plant specific fragilities become available.

Step 5 – Obtain and gather input and fragility data

The objective of this step is to obtain as-built and operational information for the plant structures and components. To the extent possible, as-built structural and current information instead of design information should be used in the structural analyses. In addition to information already listed for the interfacing structural analysis task (Section 8), the information to be gathered includes:

- Plant-specific fragility data.
- Site-specific (but not for this plant) fragility data.
- Relevant generic fragility data (as needed).
- Definition of a SSC list for which fragility analysis (including collection and review of fragility) will be performed.
- Component and system locations.
- Component qualification data as available.
- Penetrations, pipe runs between buildings, anchorages to floors, masonry blocks near safety-related equipment, underground piping, intake structures and tunnel, soil formations at the site, intake tunnel, ultimate heat sink and others, to be obtained from plant layout and drawings as well as from plant visits or walkdowns.
- Data for quantification of uncertainties for fragility analysis. As an example, for certain SSCs to be qualified by analysis this would include statistics on material properties which would be propagated through the fragility analysis (and supporting structural analyses). For other components guidance on uncertainty data to be collected is provide in the references listed at the end of this section, namely Reference 17.

DRAFT

Step 6 – Perform fragility analysis

The objectives of this step are:

- Development of fragility analysis process (for each SSC and PRA implementation).
- Execution of the fragility analysis process.
- Collect of the end results in the manner necessary for the interfacing tasks.

Step 7 – Documentation

The objective of this step is to aggregate the documentation, inputs, assumptions, modeling and analysis techniques chosen with the justification for their selection, and results for each step. This step also involves compiling and documenting the information for task and its steps in a manner consistent with the database for the Level 3 PRA project.

9.4 Documentation

The products produced as a result of the task are identified below. These products (along with the identified inputs, Section 9.2) should be sufficient for an independent analyst to understand how the analysis was performed and to reproduce the results. Consequently, the list of products includes both interim and final products. Table 9-2 provides the expected products.

DRAFT

Table 9-2. Documentation Needs for Structural Analysis
• List of safety-related SSCs for which fragility analysis will be done, e.g. seismic equipment list (seismic hazards). • Damage states, damage indices and hazard input parameters for each SSC fragility of interest. • Description of the assumptions, and method for the fragility analysis for each SSC. This includes justification of the approach used in relation to the options described here and per the criteria for the selection of the acceptable approximations. This includes a description of the methods used to relate a SSC fragility to the hazard input parameter. This also includes justification for the choice of a given method and for the use of surrogate (generic or site-specific but not for this site) fragility data. • Description of the analysis models (actual input files used for the final runs will be part of the archived information). • Description of the uncertainties contributing to the total uncertainties in the fragility estimation (whether or not the uncertainties are separated into aleatory or epistemic uncertainties). This includes uncertainties in the methods used to relate the fragility to the hazard parameter input level. • Tables of component fragilities in terms of medians and coefficients of distribution for their assumed or derived probability distribution functions. • Detailed description of the interfaces with other PRA elements to include values of the damage indices to be used in conjunction with fragility calculations and justification of the consistency for the statistical descriptions used to represent related quantities from various PRA elements. • Provide the products in a manner suitable for incorporation in the database for the Level 3 PRA study.

9.5 Task Interfaces

The technical elements that interface with task element are:

- Level 1 reactor, at-power PRA for seismic hazards
- Seismic hazard analysis
- Structural analysis
- Level 2 reactor PRA, at-power for internal events
- Quantification of spent fuel pool PRA
- Quantification of the dry cask storage PRA

Depending on the hazards and level of detail for other elements of the entire PRA, there may be interfaces between the structural analyses and these elements. These elements may include:

- Level 1 reactor, low-power and shutdown for all hazards

- Level 3 aspects that would involve evacuations that would be affected by infrastructure damage from seismic events

Level 1 reactor, at-power PRA for seismic hazards – Fragility analysis provide means to express SSC damage state probabilities in terms of a hazard input level. For this PRA element the hazard input is defined in terms of ground motion severity indices derived in the seismic hazard analysis task. The fragility analysis for this PRA element relies on the structural analysis task for the relation between the damage state and the seismic hazard input parameter (or parameters). As an example, the fragility of a component may be defined in terms of ISRS accelerations. The structural analysis provides the relation between the ISRS acceleration statistics and the ground motions indices defining the hazard input level. This interface requires consistency among the test response spectra to express the component fragility, the calculated demands in terms of ISRS statistics, and statistical characterization of the hazard parameter input level. In general, the fragility analysis should use median centered demands from the structural analysis. The fragility analysis also should take into account for the uncertainties in the relationship between the hazard input parameter and the ISRS accelerations.

Seismic hazard analysis – Use of fragility data for Level 1 reactor, at-power PRA for seismic hazards requires as input seismic loads on structures (e.g. stresses) and ISRS accelerations derived from the structural analysis and seismic hazard tasks. Uncertainties in the relation between loads on structures (e.g. stresses) and components (ISRS) and hazard input parameters (e.g. PGA) need to be included in the fragility assessments. The large uncertainties in the seismic hazard input parameters and the level of this parameter also should be taken into account when defining acceptable approximation levels for the fragility analysis for the various SSCs.

Structural analysis – In the case of seismic hazards, fragility analysis for structures and various components and systems requires the use of structural analysis to calculate damage states for these SSCs given input ground motions for a given seismic bin. In addition, ISRS calculated using dynamic structural analyses are also used in conjunction with fragility information for components and systems to estimate probabilities of failure for these components for a given seismic bin. This dependency requires defining the fragility functions in a manner that is consistent with the demands provided by the structural analyses and that accounts for the uncertainties in the calculation of these demands given the ground motions specified by the seismic hazard task. For Level 2 reactor at-power PRA, the structural analysis provides the damage states for the fragility analyses. Uncertainties in the calculation of those damage states need to be accounted for in the fragility analysis and characterized in a manner consistent with the assumptions in the fragility models.

Level 2 reactor PRA, at-power for internal events – Fragility analysis calculates the probabilities of various leakage areas under internal pressurization and temperature load histories from the accident progression analyses. Interfacing with this element also will include establishing a list of SSCs for which structural analysis will be necessary and provide the load types (static or dynamic) and their characterizations. Interfacing with this element and the fragility analysis element also will establish the type of structural response parameters of interest and the types of structural analysis modeling and analysis adequate for each SSC of interest. Uncertainties in the definition of these loads also guide the selection of the level of approximations acceptable for the fragility analysis task.

Quantification of spent fuel pool PRA – Fragility analysis would quantify damage states probabilities for the spent fuel structure and other spent fuel cooling systems that are necessary

to calculate the spent fuel performance and condition for, as an example, a given seismic bin. Damage data needed for the quantification of the spent fuel pool PRA would be used in Step 1 of the technical approach for the structural analysis element to set the fragility analysis scope for the spent fuel pool PRA.

Quantification of the dry cask storage PRA – Fragility analysis results may be needed to provide inputs to the dry cask storage PRA for accidental drops or drops that might be caused by seismic events. The scope of the fragility analyses for this element will depend on the extent to which results from prior PRAs or from analyses already being produced by the licensee can be relied upon. Interfacing with this element will depend on the hazard that the element will consider (e.g. seismic hazards) and whether their assessment will require fragility analyses.

9.6 References

The following is a partial list of technical reports, technical articles, regulatory guides and standards that can and should be used in performing this task. The emphasis is on fragility analysis methods and analytical modeling approaches used in conjunction with risk assessments or assessments for beyond-design-basis accidents.

- VEGP, “Final Safety Analysis Report (FSAR) - Vogtle Electric Generating Plant, Revision 15,” April, 2009.
- VEGP, “Vogtle Electric Generating Plant Individual Plant Examination Submittal,” Georgia Power, December 23, 1992. (Volume 1 and Volume 2) (Also response to NRC Requests for Additional Information).
- VEGP, “Vogtle Electric Generating Plant Unit 1 and Unit 2 Individual Plant Examination of External Events Submittal 0,” Georgia Power, November 1995 (Volume 1 and Volume 2) (Also response to NRC Requests for Additional Information).
- NRC, “Staff Evaluation Report of Individual Plant Examination of External Plant (IPEEE) Submittal on Vogtle Electric Generating Plant, Units 1 and 2,” Nuclear Regulatory Commission (NRC), December 2000.
- NRC, “Staff Evaluation Report of Individual Plant Examination (IPE) Submittal on Vogtle Electric Generating Plant, Units 1 and 2,” Nuclear Regulatory Commission (NRC).
- NRC, “An Approach for Determining the Technical Adequacy of Probabilistic Risk Assessment Results for Risk-Informed Activities,” RG 1.200, Revision 2, March 2009.
- NRC, “Containment Structural Integrity Evaluation for Internal Pressure Loadings Above Design Basis Pressure,” Regulatory Guide 1.216, August, 2010.
- NRC, “Interim Staff Guidance on Implementation of a Probabilistic Risk Assessment-Based Seismic Margin Analysis for New Reactors,” ISG-DC/COL-020, March, 2010.
- Spencer, B.W., J.P. Petti, and D.M. Kunsman, 2006, “Risk-Informed Assessment of Degraded Containment Vessels,” NUREG/CR-6920, SAND2006-3772P, Sandia National Laboratories, Albuquerque, NM.
- Smith, J.A., 2001, “Capacity of Prestressed Concrete Containment Vessels with Prestressing Loss.” SAND2001-1762, Sandia National Laboratories, Albuquerque, NM.
- Cherry, J.L. and J.A. Smith, 2001, “Capacity of Steel and Concrete Containment Vessels with Corrosion Damage.” NUREG/CR-6706, SAND2000-1735, Sandia National Laboratories, Albuquerque, NM.
- Tang, H.T., R.A. Dameron, and Y.R. Rashid, 1995, “Probabilistic Evaluation of Concrete Containment Capacity for Beyond Design Basis Internal Pressures,” *Nuclear Engineering and Design*, 157, 455-467.

- Hessheimer, M.F., E.W. Klamerus, L.D. Lambert, G.S. Rightley, and R.A. Dameron, 2003, "Overpressurization Test of a 1:4-Scale Prestressed Concrete Containment Vessel Model." NUREG/CR-6810, SAND2003-0840P, Sandia National Laboratories, Albuquerque, NM.
- Dameron, R. A., et al., "Posttest Analysis of the NUPEC/NRC 1:4 Scale Prestressed Concrete Containment Vessel Model," NUREG/CR-6809, March, 2003.
- EPRI, "Methodology for Developing Seismic Fragilities," EPRI Report TR-103959, Palo Alto, CA, June 1994.
- EPRI, "Nuclear Plant Seismic Margin R-1," EPRI Report NP-6041, Palo Alto, CA, August 1991.
- EPRI, "Seismic Fragility Application Guide," EPRI Report 1002988, Palo Alto, CA, December 2002.
- EPRI, "A Method for Assessment of Nuclear Power Plant Seismic Margin," EPRI Report 6041, October, 1988.
- EPRI, "Seismic Evaluation Guidance – Screening, Prioritization and Implementation Details (SPID) for the Resolution of Fukushima Near-Term Task Force Recommendation 2.1: Seismic," EPRI Draft Report, August, 2012.
- Bohn, M.P., et al., "Analysis of Core Damage Frequency: Surry Power Station Unit 1, External Events," NUREG/CR-4550, Vol. 3, Rev. 1, Part 3, December, 1990.
- Lambright, J.A. et al., "Analysis of Core Damage Frequency: Peach Bottom, Unit 2, External Events," NUREG/CR-4550, Vol. 4, Rev. 1, Part 3, December, 1990.
- NRC, "A Performance-Based Approach to Define the Site-Specific Earthquake Ground Motion," Regulatory Guide 1.208, March 2007.
- ASME/ANS, "Standard for Level 1/Large Early Release Frequency Probabilistic Risk Assessment for Nuclear Power Plant Applications," ASME/ANS RA-Sa-2009, New York, NY, 2009.

DRAFT

10. Technical Approach for Hazard Analysis

The development of the site-specific seismic hazard estimates is a supporting technical element in that it supports the development of the PRA model in several places. In supporting various other elements in the PRA, this element uses a common method; however, it may be implemented differently dependent on the context of the technical element it is supporting. The process used in the development of seismic hazard estimates will not differ for the case of Level 1 or Level 2 PRA studies. For a Level 3 study some additional development may be required as described below.

The development of seismic loads for use in the calculation of demands on, or in, structures, systems and components (SSCs) important to the PRA model consists of several interrelated steps. In a broad sense these steps involve the estimation of site-specific seismic hazard values for a representative range of structural frequencies and over a broad range of ground motion amplitudes. The overall objective of this element is to produce seismic hazard estimates at one or more locations (map coordinates and depths) that capture the uncertainties in the seismic source characterization, ground motion prediction, and site response models while preserving relative hazard levels (i.e., annual frequencies of exceedance).

The general procedure that will be followed can be summarized as follows: develop seismic hazard estimates using the latest data and models for a reference rock site condition, then, based on a geotechnical characterization of the site, develop site-specific amplification functions and produce soil hazard curves. Interaction with PRA and structural analysis teams and with the Level 3 team involved with the emergency planning portion of the study will be required. Available information on site characteristics will utilized to the maximum extent practicable. The specific steps are outlined in Section 10.4 below.

10.1 Assumptions and Limitations

The following are a list the general and common assumptions and limitations that define the scope and level of detail performed for this task.

- The seismic source characterization and ground motion prediction steps will utilize the latest available regional models (NUREG-2115 and EPRI (2004, 2006), for example).
- This discussion has assumed a site in the central and eastern U.S. will be used for this project.
- This discussion has assumed that the facilities of interest are located on either soil or soft rock and site response calculations will be required.
- All available information regarding site geotechnical and geophysical properties will be made available for the team.
- The scope of the site response calculations will be determined by the level of information available for the facility chosen for the project.
- This discussion has assumed that a relatively small number of locations and elevations for specification of ground motions and dynamic material properties will be required.

- This discussion has assumed that a summary of potential earthquake-related impacts to transportation infrastructure may need to be developed. It has not assumed that detailed structural analyses or fragility estimates of off-site transportation facilities will be developed as part this study.

10.2 Inputs

Table 10-1. Needed Inputs for Task 10	
Input	Description
Seismic source characterization and ground motion prediction models	Step 3: Calculate seismic hazard curves for reference rock conditions
Summary of locations where ground motions and dynamic material properties are required	Step 4: Identify control points
Geotechnical and geophysical data for subject facility	Step 5: Calculate amplitude and frequency dependent site amplification functions
Summary of requirements additional analyses for Level 3 study	Step 8: Level 3 Interface

10.3 Analysis Steps

The specific steps required in this task are outlined below.

Step 1 – Interface with PRA and structural analysis teams. The objective of this step is to compile a list of potentially risk-significant SSCs and define the location and depth of embedment of these SSCs. This step will define the number and locations for which ground motion estimates are required.

Step 2 – Compile available site specific information on the geological/geotechnical characteristics of the facility. The objective of this step is to assemble the relevant information that will be needed to characterize the site and develop base case shear-wave velocity models and dynamic material property curves.

Step 3 – Calculate rock seismic hazard. The objective of this task is to produce seismic hazard curves for the appropriate reference rock conditions.

Step 4 – Identify control point(s) for the development of soil ground motion hazards. For sites with soil founded SSCs of interest, the objective of this task is to identify an appropriate elevation(s) for definition of seismic hazard curves.

Step 5 – Develop frequency-dependent site amplification functions (median and logarithmic standard deviation) for an appropriate range of input ground motion amplitudes. The objective of this task is to produce an estimate of the median

amplification (or de-amplification) of soil hazard relative to the rock input motions as well as an estimate of the variability about that median value.

Step 6 – Develop hazard consistent seismic hazard curves at all elevations of interest. The objective of this step is to develop the final surface hazard curves, this step must incorporate the uncertainty in site amplification functions estimated in Step 5.

Step 7 – Develop acceleration time histories and response spectra as needed for input to structural analyses. Based on the results of the site response analyses produce strain-compatible modulus and damping information if required for soil-structure interaction calculations.

Step 8 – Interact with Level 3 team to define potential seismic impacts on transportation infrastructure and potential implications on evacuation and emergency planning.

The following table provides a list of items that need to be documented for the steps described above:

Table 10-2. Documentation Needs for Steps of Task 10

Item	Description
Steps 1, 2, and 3	Summary of site characteristics and desired control point locations. Documentation should include basis for selected control points based on the assessment in Step 1.
Step 4	Summary description and results of PSHA for rock site conditions. Documentation should include a discussion of seismic source characterization and ground motion prediction models used. Results should include fractile hazard values as well as mean.
Step 5, 6, and 7	Summary of final hazard results. The documentation should include a discussion of data used, treatment of uncertainties as well as a summary of results. Results include soil hazard curves, strain-compatible material properties and acceleration time histories for structural analyses.
Step 8	Summary of seismic impacts on off-site infrastructure (if required).

10.4 Documentation

The products produced as a result of the task are identified below. These products (along with the identified inputs, Section 10.3) should be sufficient such that it allows an independent analyst to understand how the analysis was performed and to reproduce the results. Table 10-1 provides, at a minimum, the expected products.

Table 10-3. Expected Products for Subtask 10

Product	Description
Locations (spatial and elevation) of important SSCs	Step 1: Interface with PRA and structural analysis teams
Summary of the Geotechnical	Step 2: Compile geotechnical information (interim product)

Table 10-3. Expected Products for Subtask 10	
Product	Description
characterization of the site	
Seismic hazard curves for reference rock site conditions (mean and fractiles)	Step 3: Calculate rock seismic hazard (interim product)
Identification of horizontal and vertical locations for final hazard outputs	Step 4: Identification of control point(s) (final product)
A set of frequency dependent amplification functions (median and logarithmic standard deviations), and strain compatible dynamic properties	Step 5: Development of frequency-dependent amplification functions (final product)
Seismic hazard curves for soil conditions at control point locations	Step 6: Develop soil hazard curves (final product)
Suite of acceleration time histories and response spectra	Step 7: Develop acceleration time histories and response spectra (final product)
Summary of potential seismic impacts on off-site infrastructure (transportation etc.)	Step 8: Identify potential infrastructure impacts for Level 3 assessment (interim product)

10.5 Task Interfaces

The various technical steps of the seismic hazard technical element are dependent on, or interface with, other technical elements for information in order for the step to be completed. These interfaces are as follows:

- Steps 1 and 4 require the identification of potentially risk-significant SSCs and define the location and depth of embedment of these SSCs and consequently the control point locations. This list will be developed through interaction with the PRA and structural analysis teams.

- Step 2 requires compilation of information on the geological and geophysical characteristics of the site. This requires interface with the licensee(s) to develop a complete suite of the data necessary to develop an acceptable subsurface characterization of the site.

- Step 7 will produce the final time histories and response spectra for use in the structural analyses. This step will require coordination and interface with the structural analysis

and fragility teams to define the number of and appropriate loading levels for this products.

- Step 8 requires interaction with the Level 3 team to define potential seismic impacts on transportation infrastructure and potential implications on evacuation and emergency planning.

Various tasks from other technical elements are dependent on products from this technical element. These interfaces are as follows:

- Step 6 produces soil hazard curves which are the products required in the final SPRA calculations.

- Step 7 will produce acceleration time histories and response spectral shapes which are products required for the structural analysis and fragility calculations.

- Step 8, if required, will produce a summary of potential earthquake impacts on local transportation infrastructure. This would be an input to any Level 3 emergency planning and/or evacuation assessment.

10.6 References

The following is a partial list of technical reports, technical articles, regulatory guides and standards that can and should be used in performing this task. The emphasis is on developing seismic hazard estimates for sites that quantitatively incorporate the uncertainties inherent in these types of analyses. The process should provide clear and transparent linkage to the structural analysis and SPRA elements.

- EPRI, “Seismic Evaluation Guidance – Screening, Prioritization and Implementation Details (SPID) for the Resolution of Fukushima Near-Term Task Force Recommendation 2.1: Seismic,” EPRI Draft Report, August, 2012.
- U.S. Nuclear Regulatory Commission, “A Performance-Based Approach to Define the Site-Specific Earthquake Ground Motion,” Regulatory Guide 1.208, Washington, DC, March 2007.
- U.S. Nuclear Regulatory Commission, “Recommendations for Probabilistic Seismic Hazard Analysis: Guidance on Uncertainty and Use of Experts,” NUREG/CR-6372, Washington, DC, 1997.
- U.S. Nuclear Regulatory Commission, “Practical Implementation Guidelines for SSHAC Level 3 and 4 Hazard Studies,” NUREG-2117, Washington, DC, 2012.
- ASME/ANS, “Standard for Level 1/Large Early Release Frequency Probabilistic Risk Assessment for Nuclear Power Plant Applications,” ASME/ANS RA-Sa-2009, New York, NY, 2009.
- McGuire, R. K., W. J. Silva, and C. Constantino, “Technical Basis for Revision of Regulatory Guidance on Design Ground Motions: Hazard and Risk-Consistent Ground Motion Spectra Guidelines,” NUREG/CR-6728, prepared for U.S. Nuclear Regulatory Commission, Office of Nuclear Regulatory Research, Division of Engineering Technology, 2001.

DRAFT

11. Technical Approach for Uncertainty Analysis

11.1 Introduction

The Uncertainty Analysis consists of determining the variability of the results of the events modeled in Probabilistic Risk Assessment (PRA). The following list provides the major steps where this technical event is supporting.

- *Parameter Uncertainty* relates to the uncertainty in the computation of the input parameter values used to quantify the probabilities of the events in the PRA logic model. Examples of such parameters are initiating event frequencies, component failure rates and probabilities, and human error probabilities. These uncertainties can be characterized by probability distributions that relate to the analysts' degree of belief in the values of these parameters (which could be derived from simple statistical models or from more sophisticated models).

- *Model Uncertainty* arises because different approaches may exist to represent certain aspects of plant response and none is clearly more correct than another. Uncertainty with regard to the PRA results is then introduced because uncertainty exists with regard to which model appropriately represents that aspect of the plant being modeled. In addition, a model may not be available to represent a particular aspect of the plant. Uncertainty with regard to the PRA results is again introduced because there is uncertainty with regard to a potentially significant contributor not being considered in the PRA.

11.2 Assumptions and Limitations

- All assumptions addressed in all other subtask technical approaches are applicable to uncertainty analysis and they may be part of the inputs of uncertainty analysis.
- All parameters (e.g., initiating event frequencies, human error probabilities, and common cause failure probabilities) will be estimated as a distribution in each related sub-task. If any parameter cannot be estimated as a distribution, a qualitative uncertainty analysis will be provided.
- Only parameter uncertainty and model uncertainty are analyzed. Completeness uncertainty is not in the scope of the uncertainty analysis for this study.
- The Monte Carlo Method will be applied to estimate the uncertainty propagation of parameter uncertainty.
- Sensitivity test will be applied to evaluate the model uncertainty.
- All limitations to evaluate each single parameter addressed in each related subtask are applicable to this uncertainty analysis.

11.3 Inputs

- Inputs for parameter uncertainty of basic event are same as inputs for each basic event addressed in its related subtask approach. For example, inputs for uncertainty of HEP are same as inputs for HEP and they are addressed in HRA subtask approach.
- Parameter uncertainties of basic events and cutsets generated from quantification subtask are the inputs to evaluate the parameter uncertainty of risk metric.
- Assumptions made in any subtask will be the inputs to evaluate the model uncertainty.

11.4 Analysis Steps

The Uncertainty Analysis consists of the following steps:

- Parameter Uncertainty of Basic Event:

  There are three acceptable methods for characterizing the parameter uncertainty of the parameters of the basic events: (1) the frequentist method, (2) Bayesian updating, and (3) expert judgment. The three methods are briefly described below; however, only the Bayesian updating approach will be used for the significant basic events.

  - Frequentist Method
    Frequentist approach provides a point estimate (usually the maximum likelihood estimate) and provides confidence bounds at specified levels of confidence. This approach is used when a rough estimate of a parameter is all that is required.

  - Bayesian Updating
    Using a probability model (for example, exponential distribution) to calculate the probability of a basic event or frequency of an initiating.

  - Expert Judgment
    The expert judgment approach relies on the knowledge of experts in the specific technical field who arrive at “best estimates” of the distribution of the probability of a parameter or basic event. This approach is typically used when detailed analyses or evidence concerning the event represented by a basic event are very limited or unavailable. Such a situation is usual in studying rare events. Ideally, this approach provides a mathematical probability distribution with values of a central tendency of the distribution (viz., the mean) and of the dispersion of the distribution, such as the 5th and 95th percentiles. The distribution represents the expert or “best available” knowledge about the probability of the parameter or basic event.

- Parameter Uncertainty of Risk Metric:

  Evaluating the risk metric and associated probability distribution includes five steps: (1) evaluate point-estimate of the PRA model, (2) enter parameter uncertainty data for basic events into the PRA code, (3) define epistemic correlation (EC) groups, (4) establish the significance of the EC, and (5) propagate parameter uncertainty in the PRA Model. Each of these steps is briefly described below, and Figure 11-1 illustrates the approach for obtaining the mean value and parameter uncertainty of a risk metric.

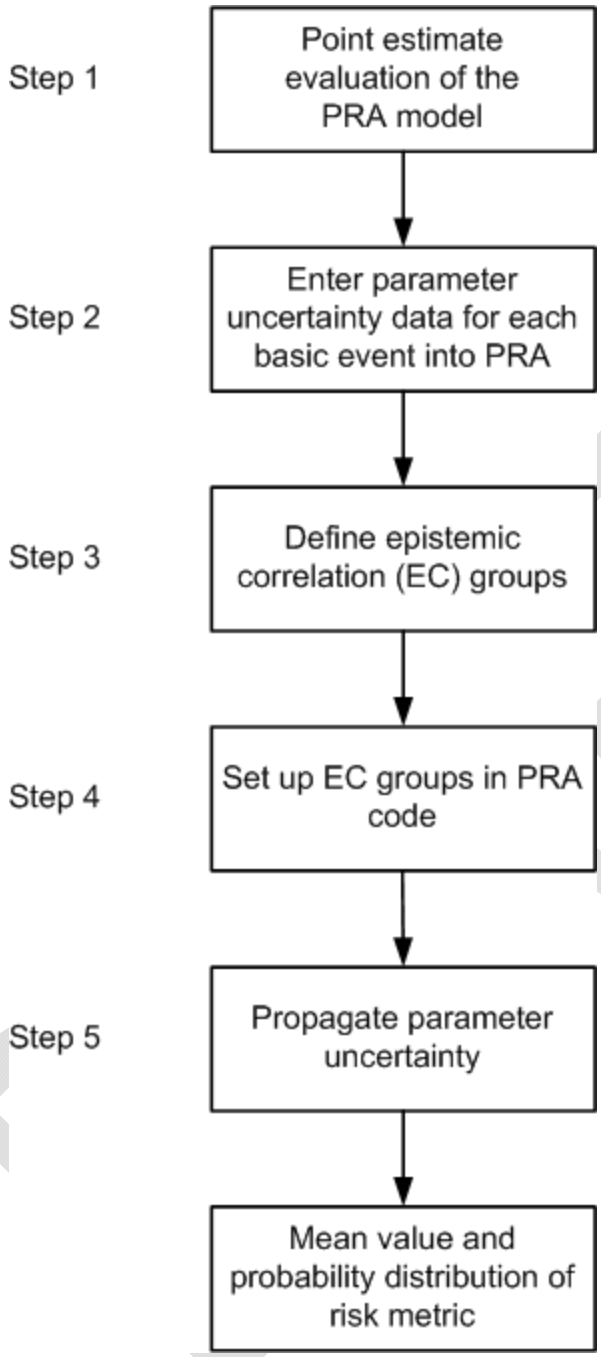

Figure 11-1 Approach for Obtaining the Mean Value and Parameter Uncertainty of a Risk Metric

- Evaluate Point-estimate of the PRA Model
  A solution of the PRA model yields the cutsets of the logic model of the PRA. The PRA computer code then can generate a point estimate of the CDF or LERF by quantifying these cutsets. It employs the point estimates of the basic events to obtain the point estimate of the CDF or LERF. The point estimate of each basic event, including each initiating event, should equal the mean value.

- Enter Parameter Uncertainty Data for Basic Events into PRA Code
  For each basic event in the PRA model, the information about the probability distribution of each of its parameters is entered into the PRA code. The distributions of the parameters of all basic events are used subsequently to propagate parameter uncertainty through the PRA model.

- Define EC Groups
  When evaluating the PRA model to assess a risk metric, the correlation between the estimates of the parameters of some basic events of the model needs to be taken into account. The correlation occurs because, for basic-event models employing the same parameters, the state of knowledge about these parameters is the same. In other words, the events are not independent but are related to each other. If the EC is ignored, the metric's mean value and uncertainty may be underestimated.

  The first step in accounting for the EC between basic events is identifying correlated events, and the outcome is the identification of several groups of correlated basic events. Each group contains basic events that are correlated with each other because the state-of-knowledge of the analysts about these events' parameters is the same. Identifying correlated basic events principally involves determining what basic-event models share the same parameters. For example, for all components of a certain type in a nuclear power plant (NPP), if the failure rate for its failure mode is evaluated from the same data set, the basic events for these components are correlated.

- Establish the Significance of the EC
  Each group of correlated basic events in the PRA model should be set up in a PRA computer code such that the particular code recognizes that the basic events are correlated. In this way, a single distribution is applicable to all the basic events in a correlated group. Then, when the code propagates the uncertainty, each sample from the distribution of a group of correlated basic events is used for all the basic events in the group. These values of the basic events subsequently are used in propagating parameter uncertainty through the PRA model to generate a value of the risk metric being evaluated. This evaluation process is repeated for all the samples evaluated by the code.

- Propagate Parameter Uncertainty in the PRA Model
  Perform parametric uncertainty propagation on the PRA model using a Monte Carlo process or a similar method through the cutsets accounting for the state-of-knowledge correlation and report the results to establish the uncertainty bounds of 5% and 95% on the risk metric.

- Model Uncertainty
  A source of model uncertainty is one that is related to an issue in which no consensus approach or model exists and where the choice of approach or model is known to have

an effect on the PRA. The structured process of the approach for treatment of modeling uncertainty includes four steps: (1) identification - identify of sources of modeling uncertainty and related assumptions, (2) characterization - characterize sources of model uncertainty and related assumptions, (3) screening - qualitative screening of the sources of uncertainty and related assumptions, and (4) sensitivity test.

- Identify of Sources of Modeling Uncertainty and Related Assumptions
  - Identify generic contributors to modeling uncertainty using the ASME/ANS PRA Standard as a structure. These generic candidates include those issues that have been earmarked as modeling uncertainty candidates based on the definitions provided in Appendix A. The objective is to identify those sources of uncertainty with the highest potential to significantly change the risk metric.

  - Evaluate the applicability of generic model uncertainties to the specific plant and PRA to provide the final generic list to be reviewed as part of the plant-specific determination of modeling uncertainties.

  - Examine plant-specific features/modeling approaches for additional uncertainties to identify if there are plant-specific treatments or PRA modeling that introduce uncertainties not included on the generic list. Add any plant specific sources of uncertainty or related assumptions to develop the plant-specific list.

- Characterize Sources of Model Uncertainty and Related Assumptions
  - The part of the PRA model that is affected by the source of model uncertainty or related assumption needs to be identified. This characterization is necessary since not every part of the PRA is involved in every application of the model. The part of the PRA model affected can be the basic event level, in specific portions of the system logic structure, or in specific portions of the accident sequence modeling.

  - The lists of related assumptions or models are identified to properly characterize how the source of uncertainty is represented in the PRA model.

  - The impact on the PRA model provides a characterization of how the related assumptions or chosen models will affect the PRA model basic event values, system logic structure, or accident sequence modeling.

  - Identify conservative biases. This step provides a method to characterize the candidate modeling uncertainties. It is critical at this stage to ensure that the conservative bias in a particular candidate model does not unduly influence the overall PRA model.

- Qualitative Screening of the Sources of Uncertainty and Related Assumptions
  - Apply consensus model. This step makes use of those areas of the PRA where extensive historical precedence is available to establish a model that has been accepted and yields PRA results that are considered reasonable and realistic.

- Sensitivity Test

- After the potential key source of uncertainty is identified, there is a need to establish a reasonable range of parameter values or set of alternative logic models for the sensitivity evaluation.

- For either type of change (logic model change or basic event value change), in some cases it may be appropriate to provide a bounding sensitivity case to demonstrate the worst possible risk metric associated with a source of uncertainty. When bounding impacts are not acceptable, however, then both increases and decreases in the risk metrics should be investigated, as appropriate. A reasonable range of variation is prescribed based on the most appropriate of the following alternatives:
  - Implementation of alternate model logic
  - Use of available probability distribution (if available) 5% and 95% bounds
  - Use of variations identified in the literature as reasonable
  - Use of judgment regarding the variations that could be expected, that is, the use of reasonable hypotheses
  - A factor of 2 to 10 change (in both directions, if appropriate)

11.5 Products

The products produced as a result of the task are identified below. These products should be sufficient such that it allows an independent analyst to understand how the analysis was performed and to reproduce the results. Consequently, the list of products includes both interim and final products. Table 11-1 provides, at a minimum, the expected products.

Table 11-1. Expected Products

Product	Description
Interim Report Section	Parameter uncertainty of basic event will be addressed in each related subtask report. For example, uncertainty of human error probability (HEP) will be addressed in HRA related report.
Parameter uncertainty of risk metrics and model uncertainty will be addressed in the Final Report	
NUREG	Integration of this section with other subtasks

DRAFT

11.6 Task Interfaces

Initiating Events, Data Analysis, CCF, and HRA may strong affect the parameter uncertainty for basic events. Every subtask of this project may affect the modeling uncertainty.

11.7 References

- Nuclear Regulatory Commission, Guidelines on the Treatment of Uncertainties Associated with PRAs in Risk-Informed Decision Making, NUREG-1855, Draft Report for Comment, November 2007.
- Electric Power Research Institute, “Treatment of Parameter and Model Uncertainty for Probabilistic Risk Assessments,” EPRI TR 1016737, Palo Alto, CA, December 2008.

DRAFT

12. Technical Approach for Reactor, At-Power, Internal Hazards PRA

The technical approach for the various analytical tasks of Task 1 (Quantification of the Reactor, At-power for Internal Hazards PRA) are described in this section. Task 1 is divided into 3 major tasks, as follows:

- Task 1-1: Level 1 reactor, at-power for internal hazards PRA
- Task 1-2: Level 2 reactor, at-power for internal hazards PRA
- Task 1-3: Level 3 reactor, at-power for internal hazards PRA

12.1 Task 1-1: Level 1 Reactor PRA, At-Power for Internal Hazards

This task is divided into three subtasks associated with each internal hazard, as follows:

1. Subtask 1-1.1: Internal Events
2. Subtask 1-1.2: Internal Floods
3. Subtask 1-1.3: Internal Fires

12.1.1 Subtask 1-1.1: Level 1 PRA for At-Power and Internal Events

This subtask comprises eight technical elements, as follows:

- Subtask 1-1.1a: Initiating event analysis
- Subtask 1-1.1b: Accident sequence analysis
- Subtask 1-1.1c: Success criteria
- Subtask 1-1.1d: Systems analysis
- Subtask 1-1.1e: Human reliability analysis
- Subtask 1-1.1f: Data Analysis
- Subtask 1-1.1g: Quantification
- Subtask 1-1.1h: Uncertainty analysis

12.1.1.1 Subtask 1-1.1a: Initiating Event Analysis

The objectives of the Initiating Event Analysis are to identify and quantify events that could lead to core damage. In accordance with the PRA Standard, an Initiating Event Analysis should (1) identify and include events that challenge normal plant operation and that require successful mitigation to prevent core damage, (2) group initiating events according to the mitigation requirements to facilitate the efficient modeling of plant response, and (3) quantify the frequencies of the initiating event groups. Since the licensee's PRA has already undergone a peer review against the PRA Standard, then a review of the peer review documentation along with a comparison of the PRA to the Vogtle SPAR model will provide the necessary information required for any modifications needed to complete the initiating event analysis for this project.

12.1.1.1.1 Assumptions and Limitations

The following are a list of assumptions and limitations that define the scope and level of detail performed for this task.

- The licensee PRA has undergone a peer review against the ASME/ANS PRA Standard for Internal Events. Therefore, the PRA can be reviewed to identify any missing initiating events in the Vogtle SPAR model.
- Consequential and concurrent initiating events are outside the scope of the Level 1, Internal Events PRA.
- The EPRI/NRC modeling of support systems initiating events (SSIEs) shall be used for applicable support systems.

12.1.1.1.2 Inputs

The design, maintenance and operational information required in order to perform the associated steps of initiating event analysis are identified. This information (along with the identified products, Section 12.1.1.1.2) should allow an independent analyst to reproduce the various results. The information needed to perform each step, at a minimum, is listed below in Table 12.1-2:

Table 12-1 Needed Inputs for Subtask 1-1.1a

Input	Description
Step 1: Review licensee PRA/Peer Review Documents and Compare with SPAR Model	
Licensee PRA and Supporting Documentation	Review applicable information on initiating events in the licensee PRA.
Licensee PRA Peer Review Report	Review peer review findings/conclusions on the Initiating Event Analysis technical element.
Vogtle SPAR Model with Documentation	Compare information from licensee PRA and peer review document with information on initiating events in the Vogtle SPAR model.
Step 2: Revise the Vogtle SPAR Model	
INL V6349 Task 1 Draft Report	The report's conclusions on initiating events shall be used to make any modifications to the Vogtle SPAR model.

12.1.1.1.3 Analysis Steps

Initiating Event Analysis consists of two interrelated steps:

1. Review licensee PRA/Peer Review Documents and Compare with SPAR Model
2. Revise the Vogtle SPAR Model

Step 1 – Review licensee PRA/Peer Review Documents and Compare with SPAR Model

The objective of this step is to determine what elements of the licensee Initiating Event Analysis of their PRA (e.g., additional initiating events, initiating event frequencies, etc.) are needed to be included or revised in the Vogtle SPAR model.

The licensee PRA, supporting documentation, and peer review report must be reviewed to understand the elements of the Initiating Event Analysis performed for the PRA. The review must also look for potential deficiencies (in accordance with the PRA Standard) with the licensee's Initiating Event Analysis. The findings of this review then need to be compared to the Vogtle SPAR model's Initiating Event Analysis. Required modifications in Initiating Event Analysis technical element for Vogtle SPAR model will be documented.

The following table provides a list of items that need to be documented for this step:

Table 12-2 Documentation Needs for Step 1 of Subtask 1.1-1.a

Item	Description
Licensee PRA and Supporting Documentation	Review applicable information on initiating events in the licensee PRA.
Licensee PRA Peer Review Report	Review peer review findings/conclusions on the Initiating Event Analysis technical element.
Vogtle SPAR Model with Documentation	Compare information from licensee PRA and peer review document with information on initiating events in the Vogtle SPAR model.

Step 2 – Revise the Vogtle SPAR Model

The objective of this step is to revise the Vogtle SPAR model and documentation such that is meets the High-Level Requirements and Supporting Requirements (preferably Capability Category II or III) of the Initiating Event Analysis technical element of the PRA Standard.
The conclusions from Step 1 will be documented in INL V6349 Task 1 Draft Report and will be used to guide the modifications involving initiating events in the Vogtle SPAR model. The SPAR model documentation will be updated accordingly and to allow for ease of a PRA Standard peer review.

The following table provides a list of items that need to be documented for this step:

Table 12-3 Documentation Needs for Step 2 of Subtask 1.1-1.a

Item	Description
INL V6349 Task 1 Draft Report	The report's conclusions on initiating events shall be used to make any modifications to the Vogtle SPAR model.

DRAFT

12.1.1.1.4 Documentation

The products produced as a result of the task are identified below. These products (along with the identified inputs, Section 12.1.1.1.2) should be sufficient such that it allows an independent analyst to understand how the analysis was performed and to reproduce the results. Consequently, the list of products includes both interim and final products. Table 12-4 provides, at a minimum, the expected products.

Table 12-4 Expected Products for Subtask 1-1.1a

Product	Description
Step 1: Review licensee PRA/Peer Review Documents and Compare with SPAR Model	
INL V6349 Task 1 Draft Report	This report will include a description of the review of the licensee PRA and peer review document. The report will include a comparison of the Initiating Event Analysis between the licensee PRA and current Vogtle SPAR model. In addition, the report will include a write-up (in following with the PRA Standard) for the Initiating Event Analysis for the revised At-Power, Level 1, Internal Hazards SPAR model.
Step 2: Revise the Vogtle SPAR Model	
Revised SPAR Model	The Vogtle SPAR will be revised according to the conclusions of INL Task 1 Draft Report.

12.1.1.1.5 Task Interfaces

Various tasks from other technical elements are dependent on products from this technical element. These interfaces are as follows:

[To be completed]

12.1.1.1.6 References

1. Licensee PRA and Supporting Documentation
2. Licensee PRA Peer Review Report
3. Vogtle SPAR Model with Documentation
4. INL V6349 Task 1 Draft Report

12.1.1.2 Subtask 1-1.1b: Accident Sequence Analysis

The objectives of the Accident Sequence Analysis are to ensure that the response of the plant's systems and operators to an initiating event is reflected in the assessment of CDF and Level 2 results, such that: (a) significant operator actions, mitigation systems, and phenomena that can alter sequences are appropriately included in the accident sequence model event tree structure and sequence definition, (b) plant-specific dependencies are reflected in the accident sequence structure (c) success criteria are available to support the individual function successes, mission times, and time windows for operator actions for each critical safety function modeled in the accident sequences, (d) end states are clearly defined to be core damage or successful mitigation with capability to support the Level 1 to Level 2 interface. Since the licensee's PRA has already undergone a peer review against the PRA Standard, then a review of the peer review documentation along with a comparison of the PRA to the Vogtle SPAR model will

provide the necessary information required for any modifications needed to enhance the SPAR model.

12.1.1.2.1 Assumptions and Limitations

The following are a list of assumptions and limitations that define the scope and level of detail performed for this task.

- The licensee PRA has undergone a peer review against the ASME/ANS PRA Standard for Internal Events. Therefore, the PRA can be reviewed to identify any deficiencies in the Accident Sequence Analysis technical element Vogtle SPAR model.
- Consequential and concurrent initiating events are outside the scope of the Level 1, Internal Events PRA.
- The EPRI/NRC modeling of SSIEs shall be used for applicable support systems.

12.1.1.2.2 Inputs

The design, maintenance and operational information required in order to perform the associated steps of Accident Sequence Analysis are identified. This information (along with the identified products, Section 12.1.1.2.4) should allow an independent analyst to reproduce the various results. The information needed to perform each step, at a minimum, is listed below in Table 12-5.

Table 12-5 Needed Inputs for Subtask 1-1.1b

Input	Description
Step 1: Review licensee PRA/Peer Review Documents and Compare with SPAR Model	
Licensee PRA and Supporting Documentation	Review applicable information on accident sequences in the licensee PRA.
Licensee PRA Peer Review Report	Review peer review findings/conclusions on the Accident Sequence Analysis technical element.
Vogtle SPAR Model with Documentation	Compare information from licensee PRA and peer review document with information on accident sequences in the Vogtle SPAR model.
Step 2: Revise the Vogtle SPAR Model	
INL V6349 Task 1 Draft Report	The report's conclusions on accident sequences shall be used to make any modifications to the Vogtle SPAR model.

12.1.1.2.3 Analysis Steps

Accident Sequence Analysis consists of two interrelated steps:

1. Review licensee PRA/Peer Review Documents and Compare with SPAR Model
2. Revise the Vogtle SPAR Model

Step 1 – Review licensee PRA/Peer Review Documents and Compare with SPAR Model

The objective of this step is to determine what elements of the licensee Accident Sequence Analysis of their PRA are needed to be included or revised in the Vogtle SPAR model.

The licensee PRA, supporting documentation, and peer review report must be reviewed to understand the elements of the Accident Sequence Analysis performed for the PRA. The review must also look for potential deficiencies (in accordance with the PRA Standard) with the licensee's Accident Sequence Analysis. The findings of this review then need to be compared to the Vogtle SPAR model's Accident Sequence Analysis. Required modifications in Accident Sequence technical element for Vogtle SPAR model will be documented.

The following table provides a list of items that need to be documented for this step.

Table 12-6 Documentation Needs for Step 1 of Subtask 1.1-1.b

Item	Description
Licensee PRA and Supporting Documentation	Review applicable information on accident sequences in the licensee PRA.
Licensee PRA Peer Review Report	Review peer review findings/conclusions on the Accident Sequence Analysis technical element.
Vogtle SPAR Model with Documentation	Compare information from licensee PRA and peer review document with information on accident sequences in the Vogtle SPAR model.

Step 2 – Revise the Vogtle SPAR Model

The objective of this step is to revise the Vogtle SPAR model and documentation such that is meets the High-Level Requirements and Supporting Requirements (preferably Capability Category II or III) of the Accident Sequence Analysis technical element of the PRA Standard.

The conclusions from Step 1 will be documented in INL V6349 Task 1 Draft Report and will be used to guide the modifications involving accident sequences in the Vogtle SPAR model. The SPAR model documentation will be updated accordingly and to allow for ease of a PRA Standard peer review.

The following table provides a list of items that need to be documented for this step:

Table 12-7 Documentation Needs for Step 2 of Subtask 1.1-1.b

Item	Description
INL V6349 Task 1 Draft Report	The report's conclusions on accident sequences shall be used to make any modifications to the Vogtle SPAR model.

12.1.1.2.4 Documentation

The products produced as a result of the task are identified below. These products (along with the identified inputs, Section 12.1.1.2.2) should be sufficient such that it allows an independent analyst to understand how the analysis was performed and to reproduce the results. Consequently, the list of products includes both interim and final products. Table 12-8 provides, at a minimum, the expected products.

Table 12-8 Expected Products for Subtask 1-1.1b

Product	Description
Step 1: Review licensee PRA/Peer Review Documents and Compare with SPAR Model	
INL V6349 Task 1 Draft Report	This report will include a description of the review of the licensee PRA and peer review document. The report will include a comparison of the Accident Sequence Analysis between the licensee PRA and current Vogtle SPAR model. In addition, the report will include a write-up (in following with the PRA Standard) for the Accident Sequence Analysis for the revised At-Power, Level 1, Internal Hazards SPAR model.
Step 2: Revise the Vogtle SPAR Model	
Revised SPAR Model	The Vogtle SPAR will be revised according to the conclusions of INL Task 1 Draft Report.

12.1.1.2.5 Task Interfaces

Various tasks from other technical elements are dependent on products from this technical element. These interfaces are as follows:

[To be completed]

12.1.1.2.6 References

1. Licensee PRA and Supporting Documentation
2. Licensee PRA Peer Review Report
3. Vogtle SPAR Model with Documentation
4. INL V6349 Task 1 Draft Report

12.1.1.3 Subtask 1-1.1c: Success Criteria

The approach for determination of the success criteria for the reactor Level 1 internal events PRA, at power, is discussed in Section 4. Section 4 supports various parts of the PRA, since it uses a common approach, even though it may be implemented differently dependent on the context of the part of the PRA model it is supporting.

The term success criteria analysis describes both the minimal equipment success criteria and the sequence timing for key operator actions. In general, both the licensee PRA and SPAR model cover this topic, and the MELCOR model and other methods discussed in Section 4 are particularly well-suited for performing analyses to develop the basis for success criteria.

Of important note is the timing of the conduct of the Level 1 internal hazards PRA in comparison to the development of the MELCOR model. The two activities are necessarily being carried out in parallel, which means that any MELCOR analysis performed for the Level 1 internal hazards PRA will need to be confirmatory in nature. In other words, such analysis will be performed after the Level 1 internal hazards PRA has been developed, and will inform: (i) any future enhancements to the Level 1 PRA, and (ii) the Level 2 internal hazards PRA. As such, for the Level 1 internal hazards model being developed and finalized in Winter 2013, The Step 4 ("Perform Confirming Computational (Or Other) Analysis") of Section 4.3 will be abbreviated and based on off-the-shelf information.

12.1.1.4. Subtask 1-1.1d: Systems Analysis

The objectives of the Systems Analysis are provided in Section 5. Since the plant's Level 1, internal events PRA has undergone a peer review against the PRA Standard, it is expected that a review of the plant PRA information (e.g., systems notebooks), peer review documentation, and a comparison of the PRA to the Vogtle SPAR model will provide the necessary information required for any modifications needed to enhance the SPAR model.

12.1.1.4.1 Assumptions and Limitations

The following are a list of assumptions and limitations that define the scope and level of detail performed for this task.

- The licensee PRA has undergone a peer review against the ASME/ANS PRA Standard for Internal Events. Therefore, the PRA can be reviewed to identify any deficiencies in the Systems Analysis technical element Vogtle SPAR model.
- Consequential and concurrent initiating events are outside the scope of the Level 1, Internal Events PRA.
- The EPRI/NRC modeling of SSIEs shall be used for applicable support systems.
- Only inter-system common-cause failures are modeled; intra-system common-cause failures are not modeled.
- Additional bullets based on licensee PRA assumptions/limitations in the Systems Analysis. [To be completed]

12.1.1.4.2 Inputs

The design, maintenance and operational information required in order to perform the associated steps of Systems Analysis are identified. This information (along with the identified products, Section 12.1.1.4.4) should allow an independent analyst to reproduce the various results. The information needed to perform each step, at a minimum, is listed below in Table 12-9.

Table 12-9 Needed Inputs for Subtask 1-1.1d

Input	Description
Step 1: Review licensee PRA/Peer Review Documents and Compare with SPAR Model	
Licensee PRA and Supporting Documentation	Review applicable information (e.g., system notebooks) on plant systems in the licensee PRA.
Licensee PRA Peer Review Report	Review peer review findings/conclusions on the Systems Analysis technical element.
Vogtle SPAR Model with Documentation	Compare information from licensee PRA and peer review document with information on plant systems in the Vogtle SPAR model.
Step 2: Revise the Vogtle SPAR Model	
INL V6349 Task 1 Draft Report	The report's conclusions on the Systems Analysis shall be

Input	Description
	used to make any modifications to the Vogtle SPAR model.

12.1.1.4.3 Analysis Steps

Systems Analysis consists of two interrelated steps:

1. Review licensee PRA/Peer Review Documents and Compare with SPAR Model
2. Revise the Vogtle SPAR Model

Step 1 – Review licensee PRA/Peer Review Documents and Compare with SPAR Model

The objective of this step is to determine what elements of the licensee Systems Analysis of their PRA are needed to be included or revised in the Vogtle SPAR model.

The licensee PRA, supporting documentation, and peer review report must be reviewed to understand the elements of the Systems Analysis performed for the PRA. The review must also look for potential deficiencies (in accordance with the PRA Standard) with the licensee's Systems Analysis. The findings of this review then need to be compared to the Vogtle SPAR model's Systems Analysis. Required modifications in Systems Analysis technical element for Vogtle SPAR model will be documented.

The following table provides a list of items that need to be documented for this step.

DRAFT

Table 12-10 Documentation Needs for Step 1 of Subtask 1.1-1.d

Item	Description
Licensee PRA and Supporting Documentation	Review applicable information on plant systems in the licensee PRA.
Licensee PRA Peer Review Report	Review peer review findings/conclusions on the Systems Analysis technical element.
Vogtle SPAR Model with Documentation	Compare information from licensee PRA and peer review document with information on plant systems in the Vogtle SPAR model.

Step 2 – Revise the Vogtle SPAR Model

The objective of this step is to revise the Vogtle SPAR model and documentation such that is meets the High-Level Requirements and Supporting Requirements (preferably Capability Category II or III) of the Systems Analysis technical element of the PRA Standard.

The conclusions from Step 1 will be documented in INL V6349 Task 1 Draft Report and will be used to guide the modifications involving plant systems in the Vogtle SPAR model. The SPAR model documentation will be updated accordingly and to allow for ease of a PRA Standard peer review.

The following table provides a list of items that need to be documented for this step.

Table 12-11 Documentation needs for Step 2 of Subtask 1.1-1.d

Item	Description
INL V6349 Task 1 Draft Report	The report's conclusions on plant systems shall be used to make any modifications to the Vogtle SPAR model.

12.1.1.4.4 Documentation

The products produced as a result of the task are identified below. These products (along with the identified inputs, Section 12.1.1.4.2) should be sufficient such that it allows an independent analyst to understand how the analysis was performed and to reproduce the results. Consequently, the list of products includes both interim and final products. Table 12-12 provides, at a minimum, the expected products.

Table 12-12 Expected Products for Subtask 1-1.1d

Product	Description
Step 1: Review licensee PRA/Peer Review Documents and Compare with SPAR Model	
INL V6349 Task 1 Draft Report	This report will include a description of the review of the licensee PRA and peer review document. The report will include a comparison of the Systems Analysis between the licensee PRA and current Vogtle SPAR model. In addition, the report will include a write-up (in following with the PRA Standard) for the Systems Analysis for the revised At-Power, Level 1, Internal Hazards SPAR model.
Step 2: Revise the Vogtle SPAR Model	
Revised SPAR Model	The Vogtle SPAR will be revised according to the conclusions of INL Task 1 Draft Report.

12.1.1.4.5 Task Interfaces

Various tasks from other technical elements are dependent on products from this technical element. These interfaces are as follows:

- Success Criteria: The Systems Analysis task identifies the systems that are necessary to mitigate the effects of the initiating event and therefore will need to be included in the development of the PRA model. This element also establishes the high level logic of the system logic model.

- Data Analysis: The component failure estimation or system initiating event frequencies used to quantify the systems models comes from the Data Analysis element.

- Human Reliability Analysis: Human failure events are taken into account in the system models which also provide feedback to the HRA.

12.1.1.4.6 References

1. Licensee PRA and Supporting Documentation
2. Licensee PRA Peer Review Report
3. Vogtle SPAR Model with Documentation
4. INL V6349 Task 1 Draft Report
5. ASME/ANS RA-Sa-2009 PRA standard
6. RG 1.200, Revision 2

12.1.1.5 Human Reliability Analysis

Human reliability analysis (HRA) is a supporting technical element in that it supports the development of the PRA model in several places. In supporting various other elements in the PRA, this element uses a common, general approach; however, it may be implemented differently dependent on the context of the technical element it is supporting. In this section, the general approach is described. Implementation-specific aspects of performing HRA are described in that part of the plan; that is, under each specific technical element.

Human reliability analysis consists of nine interrelated steps:

- Definition and interpretation of HRA/PRA issue
- Definition of HRA/PRA scope
- Qualitative analysis (i.e., information collection & interpretation, analysis to support quantification)
- Identification and definition of human failure events (HFEs)
- Quantification (both screening and detailed)
- Recovery analysis
- Dependency analysis
- Uncertainty analysis
- Documentation

Section 7 provides a full description of the generic HRA technical approach. This section repeats only summary descriptions of the guidance given in Section 7. Also, any additional guidance, assumptions, or other information needed for the specific application of HRA for at-power, internal events Level 1 PRA will be provided in the subsections below.

12.1.1.5.1 Assumptions and Limitations

Section 7 provides a list of generic assumptions and limitations that define the scope and level of detail relevant to HRA in support of PRA.

There are no additional assumptions or limitations for HRA that are relevant to the at-power, internal events Level 1 PRA. However, because these generic assumptions or limitations are expected to be especially relevant to the HRA task in support of this type of PRA, they are repeated here:

- Any PRA performed by the utility for the Vogtle NPP that is planned to be used by the NRC study:
    - With few exceptions, is adequate for the needs of RES' Level 3 PRA study with respect to scope and other study objectives.
    - Meets the ASME/ANS PRA standard requirements for Capability Category II.
    - Has been thoroughly reviewed by a qualified peer review panel.
    - Has few, if any, substantive peer review comments that need to be addressed in the RES Level 3 PRA study.
    - Requires no adjustment to success criteria or timing information (e.g., from thermal hydraulic calculations), resulting in, for example, event tree modifications or changes to HRA quantification results.
    - Includes only human failure events that are supported by formal procedures (or are skill-of-the-craft actions).
    - Is adequately documented such that HRA qualitative analysis is clear and quantification results are traceable.
    - Has addressed all key and relevant performance influencing factors for HRA.
    - Has included an HRA that was performed using methods and approaches suitable for the specific PRA.
    - Has included an HRA that was performed using HRA methods and approaches as they are intended to be used (or alternate approaches are justified).
    - Requires only a few "spot checks" of HRA quantification results to assure reasonableness.

  - Requires **little or no re-work** of HRA qualitative and/or quantitative analysis for post-initiator human failure events (HFEs).
  - Requires **no re-work** (and no substantive "spot-check" effort) for pre-initiator HFEs.

- Procedures and other formal guidance that supports human failure events exist and are currently being used and trained upon.

- Action locations, equipment, control panels and so forth exist, are currently being used and trained upon (or an acceptable alternative is available for HRA analyst review).

12.1.1.5.2 Inputs

The design, maintenance and operational information required in order to perform the associated steps of HRA are identified. This information (along with the identified products, Section 12.1.1.5.4) should allow an independent analyst to reproduce the various results.

Table 7-1 in Section 7 lists the minimum information for HRA, generically. Because the various HRA steps are iterative and overlap, some of these HRA information needs are also iterative.

For the at-power, internal events Level 1 PRA study, the HRA effort is assumed to be principally a review effort with some minimal independent checks. Hence, inputs and information needs supporting this PRA effort are expected to be limited to that which allows the HRA analyst to follow the analysis and reproduce the results.

12.1.1.5.3 Analysis Steps

As noted above, HRA consists of nine interrelated steps:

1. Definition and interpretation of HRA/PRA issue
2. Definition of HRA/PRA scope
3. Qualitative analysis
4. Identification and definition of human failure events (HFEs)
5. Quantification (both screening and detailed)
6. Recovery analysis
7. Dependency analysis
8. Uncertainty analysis
9. Documentation

Section 7 provides a complete, generic description of the above analysis steps and their documentation needs. Below, any unique aspects of performing these steps in support of the at-power, internal events Level 1 PRA are identified.

Step 1 – Definition and interpretation of HRA/PRA issue

As described in more detail by NUREG-1624, Rev. 1 and NUREG-1880, the purpose of this first step is to define the objectives of the analysis being undertaken (i.e., why is it being performed). For many past HRA applications, the issue has been to support an at-power, internal events, Level 1 PRA where the focus is principally on:

- A fully-staffed control room with licensed operators, supervisors, STA, and so forth

- Operator response to an initiating events using emergency operating procedures (EOPs) before core melt
- Operator response in the control room with its design, layout, and controlled hazards
- Operator response under the general assumption that control room indications are correct

Consequently, existing HRA processes, approaches, and methods and their underlying understanding of operator behavior should match well with the objectives of the at-power, internal events Level 1 PRA study.

Step 2 – Definition of HRA/PRA scope

As stated in NUREG-1624, Rev. 1, "[t]his step limits the scope of the analysis by applying the issue defined in Step 1 and, if necessary for practical reasons, further limits the scope by setting priorities on the characteristics of the event sequences." Also, the overall PRA study may establish these limitations. Further discussion is given in NUREG-1624, Rev. 1 and NUREG-1880.

Ordinarily, this step would result in a traditionally performed HRA in support of the at-power, internal events Level 1 PRA. However, for this specific study, it is intended that the existing utility PRA study be used. Consequently, the scope of this overall study changes how the rest of the steps in the HRA process are to be performed. In particular, the aim of the succeeding steps is to review the existing HRA and its results for appropriateness for use in the overall NRC PRA study.

Step 3 – Qualitative analysis

As described above, the objective of the third HRA step is (1) to understand the modeled PRA context for the HFE, (2) to understand the actual "as-built, as operated" response of the operators and plant, and (3) to translate this information into factors, data, and elements used in the quantification of human error probabilities.

In particular, Section 7 states that the guidance on qualitative analysis in NUREG-1921, especially, provides a level of prescription and formalism that can be used as a basis for this study. The general plan for performing qualitative analysis outlined in Section 7 is:

- Collect and evaluate information with respect to required actions and decision-making, performed, performance environment, performance aids, and so forth, especially if the HRA is in support of a PRA type other than at-power, internal event Level 1 PRA. The goal of these activities is to understand the operations and operators sufficiently to make informed choices on using existing HRA methods or behavior models, psychological literature or other tools to represent the actions and associated influencing factors.

- Collect and evaluate information with respect to required actions and decision-making, performed, performance environment, performance aids, and so forth in order to support development human failure events to place in the PRA model. The large PRA study is expected to provide certain key contextual information (e.g., success criteria for relevant plant functions including the timing by which actions must be performed).

- Collect and evaluate information with respect to actions to determine if they are "feasible" per definition in NUREG-1921. Feasibility initially may be evaluated with crude estimates for timing for a "go/no-go" determination. Later, as more information is collected by the HRA analyst and/or the larger PRA study, the feasibility assessment will be refined and re-checked. **This step is not expected to be relevant for the at-power, internal events Level 1 PRA.**

- Ultimately, information will need to collected and developed as inputs to an existing HRA methods or other quantification approach.

Although the HRA supporting the at-power, internal events Level 1 PRA for the NRC's study is intended to be limited to review and verification of the utility's existing PRA, much of the HRA qualitative analysis tasks are expected to be performed. These tasks are necessary in order to determine the appropriateness of the qualitative analysis for the existing HRA/PRA and, therefore, the HRA quantification results produced with inputs from the qualitative analysis. Also, the general understanding of the plant, its operations, and operators, its procedures, and so forth that will be developed as part of the HRA for the at-power, internal events Level 1 PRA can be used as a basis for the other PRA efforts encompassed for the overall NRC Level 3 PRA study. Also, certain information, especially information on the time available and time required for operator actions, may be useful or applicable to any new HFEs that this HRA effort determines should be added and in other PRA types within the overall NRC study.

However, to the extent possible, this HRA effort will be limited, using the larger at-power, internal events Level 1 PRA study as a guide. For example, as part of the accident sequence analysis review of event trees, the HRA effort will include review of relevant procedures and other information to assure that appropriate HFEs have been identified and defined (supporting Step 4).

Step 4 – Identification and definition of human failure events (HFEs)

Section 7 provides the following quote from NUREG-1921: "[t]he objectives of this step are to identify operator (or other human) actions and associated guidance and cues (e.g., procedures and instrumentation) necessary for the successful mitigation of the relevant PRA scenario, and to define the human failure events (HFEs) at the appropriate level of detail to support qualitative analysis and quantification.

For this HRA effort supporting NRC's at-power, internal events Level 1 PRA, "spot-check" reviews to determine that needed HFEs have been identified, and that HFEs in the existing utility PRA have been appropriately identified, defined, and placed in the PRA model. These spot checks will address both pre-initiator and post-initiator HFEs, but will be weighted more heavily on reviews of post-initiator HFEs. In addition, HFEs in risk-significant cut sets and traditionally risk-important accident sequences.

Step 5 – Quantification (both screening and detailed)

As discussed in Section 7, the objective of the fifth step is to assign or determine failure probabilities for HFEs included in the PRA model. It is expected that the existing utility PRA was developing using the EPRI HRA Approach that includes the following HRA quantification methods:

- THERP (for execution failures)

- Cause-Based Decision Tree (CBDT) Method (not time-driven) or human cognitive reliability/operator reliability experiment

As in Step 4 above, for supporting NRC's at-power, internal events Level 1 PRA, this HRA effort is expected to consist of:

- "Spot-check" of HFE quantification results, including:
  - Appropriate translation of qualitative analysis into inputs for HRA quantification methods
  - Appropriate HFE quantification method selection and use
  - "Sanity checks" of results (using the definition in NUREG-1792)
- Re-quantification using alternate HRA quantification methods within the EPRI HRA Calculator for a limited number of risk-significant (or otherwise important) HFEs
- Quantification of any HFEs that are newly identified in this HRA effort using an appropriate HRA quantification method

Spot checks will address both pre-initiator and post-initiator HFEs, but will be weighted more heavily on reviews of post-initiator HFEs. In addition, HFEs in risk-significant cut sets and traditionally risk-important accident sequences.

Step 6 – Recovery analysis

As for previously discussed HRA tasks supporting the NRC's at-power, internal events Level 1 PRA, spot checks of HRA results in the existing utility PRA will be performed, coupled with any needed re-analysis. The discussions above for the identification and definition, and HRA quantification also apply to this step.

DRAFT

Step 7 – Dependency analysis

As for previously discussed HRA tasks supporting the NRC's at-power, internal events Level 1 PRA, spot checks of the treatment of dependencies between HFEs in the existing utility PRA will be performed, coupled with any needed re-analysis. The discussions above for the identification and definition, HRA quantification, recovery analysis also apply to this step.

In addition, the sources of dependency between HFEs identified in the existing utility's PRA will be reviewed for appropriateness, especially focusing on the influence of available time.

Step 8 – Uncertainty analysis

Due to the scope and limitations of the larger PRA effort for the at-power, internal events Level 1 effort, the HRA effort is expected to be limited to: 1) assuring that the HRA uncertainty analysis for the existing utility is appropriate and 2) supplementing the existing uncertainty analysis with additional analysis and inputs (e.g., uncertainty sources), as appropriate and as needed by the larger PRA study.

Step 9 – Documentation

Due to the scope and limitations of the larger PRA effort for the at-power, internal events Level 1 effort, the HRA effort is expected to be limited to: 1) assuring that the documentation developed for the existing utility HRA/PRA is adequate and 2) supplementing the existing documentation with additional information, as appropriate.

12.1.1.5.4 Documentation

Section 7 generically describes the products produced as a result of the HRA task. All of the discussion in Section 7 is relevant for HRA in support of at-power, internal events Level 1 PRA.

From Section 7, the major products of HRA are:

- Identified and defined PRA events that are associated with actions, decisions, and other human activities
- Failure probabilities or other quantification results associated with human-related PRA events
- Qualitative analysis that supports and justifies products #1 and #2
- Documentation of all products above

12.1.1.5.5 Task Interfaces

HRA is a supporting task to almost all of PRA technical elements regardless of the plant operating mode, PRA hazard, or PRA type. The general discussion provided in Section 7 applies to the HRA effort supporting the at-power, internal events Level 1 PRA.

12.1.1.5.6 References

The reference list from Section 7 is repeated below. In addition, two references associated with EPRI's HRA Calculator have been added to the end of the list.

1. USNRC and EPRI, "EPRI/NRC-RES Fire Human Reliability Analysis Guidelines," NUREG-1921, July 2012.
2. USNRC, "A Technique for Human Event Analysis (ATHEANA)," NUREG-1624, Rev. 1.
3. USNRC, "ATHEANA User's Guide," NUREG-1880, June 2007.
4. USNRC, "Good Practices for Implementing Human Reliability Analysis (HRA)," NUREG-1792, April 2005.
5. USNRC, "Evaluation of HRA Methods Against Good Practices," NUREG-1842, September 2006.
6. Swain, A.D. and H.E. Guttmann, "Handbook of Human Reliability Analysis with Emphasis on Nuclear Power Plant Applications (THERP)", NUREG/CR-1278, 1983.
7. USNRC, "An Approach for Determining the Technical Adequacy of Probabilistic Risk Assessment Results for Risk-Informed Activities," Regulatory Guide 1.200, Rev. 2, March 2009.
8. ASME/ANS RA-Sa-2009, Addenda to ASME/ANS RA-S-2008, "Standard for Level 1/Large Early Release Frequency Probabilistic Risk Assessment for Nuclear Power Plant Applications," The American Society of Mechanical Engineers, New York, NY, February 2009.
9. Embrey, D.C., P. Humpherys, E.A. Rosa, B. Kirwan, and K. Rea, "SLIM-MAUD: An Approach to Assessing Human Error Probabilities Using Structured Expert Judgment," NUREG/CR-3518, 1984.
10. Reason, J., Human Error, Cambridge University Press, New York, NY, 1990.
11. Reason, J., "Managing the Risks of Organizational Accidents," Ashgate Publishing Limited, 1997.
12. Reason, J., "The Human Contribution - Unsafe Acts, Accidents, and Heroic Recoveries," Ashgate Publishing Limited, 2008.
13. U.S. Nuclear Regulatory Commission, "Staff Requirements Memorandum - Meeting with Advisory Committee on Reactor Safeguards," SRM M061020, November 8, 2006.
14. Klein, G., "Sources of Power - How People Make Decisions," MIT Press, 1998.
15. EPRI, "An Approach to the Analysis of Operator Actions in Probabilistic Risk Assessment," EPRI TR-100259, Palo Alto, CA, 1992.
16. EPRI, "Operator Reliability Experiments Using Nuclear Power Plant Simulators," EPRI NP-6937, Palo Alto, CA, 1990.

12.1.1.6 Subtask 1-1.1f: Data Analysis

The objectives of the Data Analysis are provided in Section 6. Since the licensee's PRA has already undergone a peer review against the PRA Standard, then a review of the peer review documentation along with a comparison of the PRA to the Vogtle SPAR model will provide the necessary information required for any modifications needed to enhance the SPAR model.

DRAFT

12.1.1.6.1 Assumptions and Limitations

The following are a list of assumptions and limitations that define the scope and level of detail performed for this task.

- The licensee PRA has undergone a peer review against the ASME/ANS PRA Standard for Internal Events. Therefore, the PRA can be reviewed to identify any deficiencies in the Data Analysis technical element Vogtle SPAR model.
- The EPRI/NRC modeling of SSIEs shall be used for applicable support systems.
- Only inter-system CCF is modeled; intra-system CCF is not considered as part of this PRA.

12.1.1.6.2 Inputs

The design, maintenance and operational information required in order to perform the associated steps of Data Analysis are identified. This information (along with the identified products, Section 12.1.1.6.4) should allow an independent analyst to reproduce the various results. The information needed to perform each step, at a minimum, is listed below in Table 12-13.

Table 12-13 Needed Inputs for Subtask 1-1.1f

Input	Description
Step 1: Review licensee PRA/Peer Review Documents and Compare with SPAR Model	
Licensee PRA and Supporting Documentation	Review applicable information on data used in the licensee PRA.
Licensee PRA Peer Review Report	Review peer review findings/conclusions on the Data Analysis technical element.
Vogtle SPAR Model with Documentation	Compare information from licensee PRA and peer review document with information on Data Analysis in the Vogtle SPAR model.
Step 2: Revise the Vogtle SPAR Model	
INL V6349 Task 1 Draft Report	The report's conclusions on Data Analysis shall be used to make any modifications to the Vogtle SPAR model.

12.1.1.6.3 Analysis Steps

Data Analysis consists of two interrelated steps:

1. Review licensee PRA/Peer Review Documents and Compare with SPAR Model
2. Revise the Vogtle SPAR Model

Step 1 – Review licensee PRA/Peer Review Documents and Compare with SPAR Model

The objective of this step is to determine what elements of the licensee Data Analysis of their PRA are needed to be included or revised in the Vogtle SPAR model.

The licensee PRA, supporting documentation, and peer review report must be reviewed to understand the elements of the Data Analysis performed for the PRA. The review must also look for potential deficiencies (in accordance with the PRA Standard) with the licensee's Data Analysis. The findings of this review then need to be compared to the Vogtle SPAR model's Data Analysis. Required modifications in Data Analysis technical element for Vogtle SPAR model will be documented.

The following table provides a list of items that need to be documented for this step.

Table 12-14 Documentation Needs for Step 1 of Subtask 1.1-1.f

Item	Description
Licensee PRA and Supporting Documentation	Review applicable information on data used in the licensee PRA.
Licensee PRA Peer Review Report	Review peer review findings/conclusions on the Data Analysis technical element.
Vogtle SPAR Model with Documentation	Compare information from licensee PRA and peer review document with information on Data Analysis in the Vogtle SPAR model.

Step 2 – Revise the Vogtle SPAR Model

The objective of this step is to revise the Vogtle SPAR model and documentation such that is meets the High-Level Requirements and Supporting Requirements (preferably Capability Category II or III) of the Data Analysis technical element of the PRA Standard.

The conclusions from Step 1 will be documented in INL V6349 Task 1 Draft Report and will be used to guide the modifications involving the data used in the Vogtle SPAR model. The SPAR model documentation will be updated accordingly and to allow for ease of a PRA Standard peer review.

The following table provides a list of items that need to be documented for this step.

Table 12-15 Documentation Needs for Step 2 of Subtask 1.1-1.f

Item	Description
INL V6349 Task 1 Draft Report	The report's conclusions on Data Analysis shall be used to make any modifications to the Vogtle SPAR model.

12.1.1.6.4 Documentation

The products produced as a result of the task are identified below. These products (along with the identified inputs, Section 12.1.1.6.2) should be sufficient such that it allows an independent analyst to understand how the analysis was performed and to reproduce the results. Consequently, the list of products includes both interim and final products. Table 12-16 provides, at a minimum, the expected products.

Table 12-16 Expected Products for Subtask 1-1.1f

Product	Description
Step 1: Review licensee PRA/Peer Review Documents and Compare with SPAR Model	
INL V6349 Task 1 Draft Report	This report will include a description of the review of the licensee PRA and peer review document. The report will include a comparison of the Data Analysis between the licensee PRA and current Vogtle SPAR model. In addition, the report will include a write-up (in following with the PRA Standard) for the Data Analysis for the revised At-Power, Level 1, Internal Hazards SPAR model.
Step 2: Revise the Vogtle SPAR Model	
Revised SPAR Model	The Vogtle SPAR will be revised according to the conclusions of INL Task 1 Draft Report.

12.1.1.6.5 Task Interfaces

Various tasks from other technical elements are dependent on products from this technical element. These interfaces are as follows:

- Systems Analysis: The component failure estimations or system initiating event frequencies used to quantify the systems models comes from the Data Analysis element.

- Human Reliability Analysis: Some human failure events (e.g., LOOP recovery actions) may be based on data evaluated in the Data Analysis element.

12.1.1.6.6 References

1. Licensee PRA and Supporting Documentation
2. Licensee PRA Peer Review Report
3. Vogtle SPAR Model with Documentation
4. INL V6349 Task 1 Draft Report
5. ASME/ANS RA-Sa-2009 PRA standard
6. RG 1.200, Revision 2

DRAFT

12.1.1.7 Subtask 1-1.1g: Quantification

The objectives of the Quantification element are to provide an estimate of CDF based upon the plant-specific core damage scenarios, such that (1) the results reflect the design, operation, and maintenance of the plant, (2) significant contributors to CDF are identified such as initiating events, accident sequences, and basic events, (3) dependencies are accounted for, and (4) uncertainties are understood. Since the licensee's PRA has already undergone a peer review against the PRA Standard, then a review of the peer review documentation along with a comparison of the PRA to the Vogtle SPAR model will provide the necessary information required for any modifications needed to enhance the SPAR model.

12.1.1.7.1 Assumptions and Limitations

The following are a list of assumptions and limitations that define the scope and level of detail performed for this task.

- The licensee PRA has undergone a peer review against the ASME/ANS PRA Standard for Internal Events. Therefore, the PRA can be reviewed to identify any deficiencies in the Quantification technical element Vogtle SPAR model.
- Consequential and concurrent initiating events are outside the scope of the Level 1, Internal Events PRA.
- The EPRI/NRC modeling of SSIEs shall be used for applicable support systems.

12.1.1.7.2 Inputs

The design, maintenance and operational information required in order to perform the associated steps of Quantification are identified. This information (along with the identified products, Section 12.1.1.7.2) should allow an independent analyst to reproduce the various results. The information needed to perform each step, at a minimum, is listed below in Table 12-17.

Table 12-17 Needed Inputs for Subtask 1-1.1f

Input	Description
Step 1: Review licensee PRA/Peer Review Documents and Compare with SPAR Model	
Licensee PRA and Supporting Documentation	Review applicable information on Quantification used in the licensee PRA.
Licensee PRA Peer Review Report	Review peer review findings/conclusions on the Quantification technical element.
Vogtle SPAR Model with Documentation	Compare information from licensee PRA and peer review document with information on Quantification in the Vogtle SPAR model.
Step 2: Revise the Vogtle SPAR Model	
INL V6349 Task 1 Draft Report	The report's conclusions on Quantification shall be used to make any modifications to the Vogtle SPAR model.

12.1.1.7.3 Analysis Steps

Quantification consists of two interrelated steps:

1. Review licensee PRA/Peer Review Documents and Compare with SPAR Model
2. Revise the Vogtle SPAR Model

Step 1 – Review licensee PRA/Peer Review Documents and Compare with SPAR Model

The objective of this step is to determine what elements of the licensee Quantification of their PRA are needed to be included or revised in the Vogtle SPAR model.

The licensee PRA, supporting documentation, and peer review report must be reviewed to understand the elements of the Quantification performed for the PRA. The review must also look for potential deficiencies (in accordance with the PRA Standard) with the licensee's Quantification. The findings of this review then need to be compared to the Vogtle SPAR model's Quantification. Required modifications in Quantification technical element for Vogtle SPAR model will be documented.

The following table provides a list of items that need to be documented for this step.

Table 12-18 Documentation Needs for Step 1 of Subtask 1.1-1.f

Item	Description
Licensee PRA and Supporting Documentation	Review applicable information on Quantification used in the licensee PRA.
Licensee PRA Peer Review Report	Review peer review findings/conclusions on the Quantification technical element.
Vogtle SPAR Model with Documentation	Compare information from licensee PRA and peer review document with information on Quantification in the Vogtle SPAR model.

Step 2 – Revise the Vogtle SPAR Model

The objective of this step is to revise the Vogtle SPAR model and documentation such that is meets the High-Level Requirements and Supporting Requirements (preferably Capability Category II or III) of the Quantification technical element of the PRA Standard.

The conclusions from Step 1 will be documented in INL V6349 Task 1 Draft Report and will be used to guide the modifications involving the Quantification in the Vogtle SPAR model. The SPAR model documentation will be updated accordingly and to allow for ease of a PRA Standard peer review.

The following table provides a list of items that need to be documented for this step.

Table 12-19 Documentation Needs for Step 2 of Subtask 1.1-1.f

Item	Description
INL V6349 Task 1 Draft Report	The report's conclusions on Quantification shall be used to make any modifications to the Vogtle SPAR model.

12.1.1.7.4 Documentation

The products produced as a result of the task are identified below. These products (along with the identified inputs, Section 12.1.1.7.2) should be sufficient such that it allows an independent analyst to understand how the analysis was performed and to reproduce the results. Consequently, the list of products includes both interim and final products. Table 12-20 provides, at a minimum, the expected products.

Table 12-20 Expected Products for Subtask 1-1.1f

Product	Description
Step 1: Review licensee PRA/Peer Review Documents and Compare with SPAR Model	
INL V6349 Task 1 Draft Report	This report will include a description of the review of the licensee PRA and peer review document. The report will include a comparison of Quantification between the licensee PRA and current Vogtle SPAR model. In addition, the report will include a write-up (in following with the PRA Standard) for the Quantification for the revised At-Power, Level 1, Internal Hazards SPAR model.
Step 2: Revise the Vogtle SPAR Model	
Revised SPAR Model	The Vogtle SPAR will be revised according to the conclusions of INL Task 1 Draft Report.

12.1.1.7.5 Task Interfaces

Various tasks from other technical elements are dependent on products from this technical element. These interfaces are as follows:

[To be completed]

12.1.1.7.6 References

1. Licensee PRA and Supporting Documentation
2. Licensee PRA Peer Review Report
3. Vogtle SPAR Model with Documentation
4. INL V6349 Task 1 Draft Report

12.1.1.8 Uncertainty Analysis

12.1.1.8.1 Assumptions and Limitations

Uncertainty analysis is an integrated process including every element of PRA, such as initiating event, human reliability analysis, and data analysis. Thus, all assumptions and limitations addressed in all other subtask technical approaches are part of the inputs of uncertainty analysis.

12.1.1.8.2 Inputs

- Inputs for parameter uncertainty of basic event are same as inputs for each basic event addressed in its related subtask approach. For example, inputs for uncertainty of HEP are same as inputs for HEP and they are addressed in HRA subtask approach.
- Parameter uncertainties of basic events and cutsets generated from quantification subtask are the inputs to evaluate the parameter uncertainty of risk metric.
- Assumptions made in any subtask will be the inputs to evaluate the model uncertainty.

12.1.1.8.3 Analysis Steps

The uncertainty analysis steps are similar to those identified in Section 11 of this TAP (see Section 11).

12.1.1.8.4 Documentation

The products produced as a result of the task are identified below. These products should be sufficient such that it allows an independent analyst to understand how the analysis was performed and to reproduce the results. Consequently, the list of products includes both interim and final products. Table 12-21 provides, at a minimum, the expected products.

Table 12-21 Expected Products

Product	Description
Interim Report Section	Parameter uncertainty of basic event will be addressed in each related subtask report. For example, uncertainty of human error probability (HEP) will be addressed in HRA related report.
Parameter uncertainty of risk metrics and model uncertainty will be addressed in the Final Report	
NUREG	Integration of this section with other subtasks

12.1.1.8.5 Task Interfaces

Initiating Events, Data Analysis, CCF, and HRA may strong affect the parameter uncertainty for basic events. Every subtask of this project may affect the modeling uncertainty.

12.1.1.8.6 References

1. U.S. Nuclear Regulatory Commission, "Guidelines on the Treatment of Uncertainties Associated with PRAs in Risk-Informed Decision Making," NUREG-1855, Draft Report for Comment, November 2007.
2. Electric Power Research Institute, "Treatment of Parameter and Model Uncertainty for Probabilistic Risk Assessments," EPRI TR 1016737, Palo Alto, CA, December 2008.

12.1.2 Subtask 1-1.2: Level 1 Reactor PRA for At-Power and Internal Floods

The Internal Flood Analysis consists of five interrelated steps:

1. Review the Internal Flood Analysis
2. Supplement the Internal Flood Analysis
3. Define the internal flood scenarios
4. Model the internal flood scenarios
5. Document the analysis

The objective of the first step is to review the Internal Flood Analysis information provided by the Vogtle plant staff for quality and completeness. The Internal Flood Analysis consists of the following technical elements:

1. Internal Flood Plant Partitioning
2. Internal Flood Source Identification and Characterization
3. Internal Flood Scenarios
4. Internal Flood-Induced Initiating Events
5. Internal Flood Accident Sequences and Quantification

The staff will review and assess each of the technical elements of the Vogtle Internal Flood PRA. The objective of the second step is to identify any areas of the analysis that are deficient and gather the supplemental information needed to perform a technically adequate PRA. The objective of the third step is to define the set of internal flood scenarios to be modeled in the Level 1, at-power SPAR model. The objective of the fourth step is to create the internal flood SPAR model. The objective of the fifth step is to summarize the information that has been reviewed and document the analysis.

12.1.2.1 Assumptions and Limitations

The following are a list of assumptions and limitations that define the scope and level of detail performed for this task.

- The Vogtle site has performed a Level 1 PRA for at-power and internal floods. The Internal Flood Analysis, including all related technical elements, has been performed as part of this PRA. It is assumed that the Vogtle plant staff will provide sufficient documentation of the analysis.

- It is assumed that the analysis performed for the Vogtle site PRA is technically adequate. If the analysis is found to be inadequate in some areas, then the staff will supplement the analysis as necessary. It is assumed that the supplemental analysis and information gathering performed by the staff will be minimal. If necessary, the staff may request additional information from the Vogtle plant staff. This may include additional documentation, drawings, plant walkdowns, and interviews with plant staff. If

necessary, the staff may seek out additional references or input from subject matter experts, but this is not anticipated.

- To complete work on Steps 3 and 4 (defining and modeling internal flood scenarios) it is assumed that a stable version of the Level 1 PRA for At-Power and Internal Events SPAR model will be available. The internal flood scenarios will be defined to be consistent with the internal events model assumptions and level of detail. The internal flood scenarios will also depend on parts (e.g., event trees, fault trees, and basic events) of the internal events model. Any changes to the internal events model may impact the internal flood scenarios.

12.1.2.2 Inputs

The design, maintenance and operational information required in order to perform the associated steps of Internal Flood Analysis are identified. This information (along with the identified products, Section 12.1.2.4) should allow an independent analyst to reproduce the various results. The information needed to perform each step, at a minimum, is listed below in Table 12-22.

Table 12-22 Needed Inputs for Subtask 1-1.2

Input	Description
Step 1: Review the Internal Flood Analysis	
Vogtle Internal Flood PRA documentation	The complete documentation of the Vogtle Internal Flood PRA. This includes descriptions of the analyses for all Internal Flood PRA technical elements. This information is needed to begin work on this task.
Vogtle Internal Flood PRA peer review or	A report documenting the peer review or of the Vogtle Internal Flood PRA will assist the staff in establishing the technical adequacy of the model.
Step 2: Supplement the Internal Flood Analysis	
Supplemental information	Supplemental information will be requested as deemed necessary. This may include additional documentation, drawings, plant walkdowns, and interviews with plant staff, external references, and input from subject matter experts.

12.1.2.3 Analysis Steps

Internal Flood Analysis consists of five interrelated steps:

Step 1 – Review the Internal Flood Analysis

The objectives of this step are:

- To review the analysis done to support the Vogtle Internal Flood PRA.
- To assess the technical adequacy of each Internal Flood PRA technical element.

The staff will review the documentation for the Vogtle Internal Flood PRA. Each Internal Flood PRA technical element will be reviewed for technical adequacy and completeness. The staff will review available peer review and/or reports from the Vogtle plant staff. The staff will refer to Regulatory Guide 1.200 and Part 3 of the Level 1/LERF PRA Standard (ASME/ANS RA-Sa-2009) for guidance on determining technical adequacy. For HRA specifically, the staff will refer to NUREG-1921, *EPRI/NRC-RES Fire Human Reliability Analysis Guidelines*, as it is anticipated that there will be some common human performance issues between fire and internal flooding events.

The following table provides a list of items that need to be documented for this step.

Table 12-23 Documentation Needs for Step 1 of Subtask 1-1.2

Item	Description
Review of IFPP	Summary of review of Internal Flood Plant Partitioning (IFPP) analysis
Review of IFSO	Summary of review of Internal Flood Source Identification and Characterization (IFSO) analysis
Review of IFSN	Summary of review of Internal Flood Scenarios (IFSN) analysis
Review of IFEV	Summary of review of Internal Flood-Induced Initiating Events (IFEV) analysis
Review of IFQU	Summary of review of Internal Flood Accident Sequences and Quantification (IFQU) analysis
Technical Adequacy Assessment	The staff's assessment of the Internal Flood Analysis technical adequacy and summary of review of peer review and/or reports

Step 2 – Supplement the Internal Flood Analysis

The objectives of this step are:

- To identify any areas where the Internal Flood Analysis is inadequate.
- To supplement the analysis with additional information to fill any gaps.

After reviewing the information provided by Vogtle, the staff will identify any areas that require additional analysis. It is assumed that the analysis performed for the Vogtle site PRA is technically adequate. It is assumed that the supplemental analysis and information gathering performed by the staff will be minimal. If necessary, the staff may request additional information from the Vogtle plant staff. This may include additional documentation, drawings, plant walkdowns, and interviews with plant staff. If necessary, the staff may seek out additional references or input from subject matter experts, but this is not anticipated.

The following table provides a list of items that need to be documented for this step.

Table 12-24 Documentation Needs for Step 2 of Subtask 1-1.2

Item	Description
Supplemental Information	Summary of the supplemental information that was gathered to support the Internal Flood Analysis.
Supplemental Technical Adequacy Assessment	The technical adequacy of the supplemental information will be assessed to ensure all technical gaps have been addressed.

Step 3 – Define the Internal Flood Scenarios

The objectives of this step are:

- To define the set of internal flood scenarios to be modeled in the Level 1, at-power SPAR model.

After reviewing the Vogtle site Internal Flood PRA, the staff will define the internal flood scenarios to be modeled in the SPAR model for this project. The most straightforward approach for defining the internal flood scenarios is to take the scenarios directly from the Vogtle site Internal Flood PRA. However, the staff will likely need to make adjustments to the scenarios to align with the SPAR modeling approach. The internal flood scenarios will need to be defined to be consistent with the SPAR internal events model assumptions and level of detail. Any adjustments that are made to the Vogtle internal flood scenarios will be justified and demonstrated to not significantly impact the model results. The INL staff will be consulted for input on the internal flood definitions, as they will be tasked with incorporating the scenarios into the SPAR model. The internal flood scenario definitions will be documented in sufficient detail to support INL's work on incorporating the scenarios into the model. This will include, at a minimum:

- Scenario event tree names and descriptions
- Initiating event frequencies
- Existing initiating event group that captures the flood impact
- List of affected equipment and basic events to model the effects

As appropriate, human failure events will be included and addressed as described generally in Section 7.

The following table provides a list of items that need to be documented for this step.

Table 12-25 Documentation Needs for Step 3 of Subtask 1-1.2

Item	Description
Internal Flood Scenario Definitions	Definition of the internal flood scenarios to be modeled in the SPAR model.
Internal Flood Scenario Map from Vogtle Scenarios to SPAR Scenarios	A table will be developed showing how the Vogtle internal flood scenarios are related to the scenarios to be modeled in the SPAR model. This will include descriptions of how the scenarios are directly modeled, grouped, subsumed,

Item	Description
	screened, etc.

Step 4 – Model the Internal Flood Scenarios

The objectives of this step are:

- To incorporate the set of internal flood scenarios into the Level 1, at-power, internal events SPAR model.

The internal flood scenarios defined in Step 3 are to be incorporated into the Level 1, at-power, internal events SPAR model. This task will include creating the event trees, fault trees, linking and post-processing rules, and basic events that are needed to model the scenarios. The INL staff will perform this work and ensure that the internal flood scenarios are consistent with the general SPAR modeling approach. A stable version of the Level 1, at-power, internal events SPAR model must be available to complete this step. The internal flood scenarios will depend on parts (e.g., event trees, fault trees, and basic events) of the internal events model. Any changes to the internal events model may impact the internal flood scenarios. The staff will review the internal flood SPAR model and results.

The following table provides a list of items that need to be documented for this step.

Table 12-26 Documentation Needs for Step 4 of Subtask 1-1.2

Item	Description
Additional Modeling Details	The internal flood scenarios will be documented in Step 3, but there may be additional modeling details (e.g., linking and post-processing rules) that need to be captured after completing the model.

Step 5 – Document the Internal Flood Analysis

The objectives of this step are:

- To summarize the information that has been reviewed.
- To document the modeling assumptions and analysis steps.
- To report results and insights from the internal flood PRA.

After completion of the internal flood SPAR model, the staff will document the work that has been performed. The documentation will include a summary of all the information that the staff reviewed and assessed, descriptions of the internal flood scenarios that have been incorporated into the model, and discussion of the results and insights from the model. The final documentation will incorporate all the information that was documented in the previous steps.

The following table provides a list of items that need to be documented for this step.

Table 12-27 Documentation Needs for Step 5 of Subtask 1-1.2

Item	Description
Level 1 PRA for At-	The report will incorporate the work completed under the

Item	Description
Power and Internal Floods Final Report	previous steps and summarize the results and insights from the internal flood PRA.

12.1.2.4 Documentation

The products produced as a result of the task are identified below. These products (along with the identified inputs, Section 15.1.2.1.3) should be sufficient such that it allows an independent analyst to understand how the analysis was performed and to reproduce the results. Consequently, the list of products include both interim and final products. Table 12-28 provides, at a minimum, the expected products.

Table 12-28 Expected Products for Subtask 1-1.2

Product	Description
Steps 1 and 2: Review and supplemental analysis	
Summary of Vogtle Internal Flood Review	The report will summarize the documentation provided by Vogtle and the staff's assessment of those documents. If supplemental analysis is required, then the report will summarize what additional information was gathered and what steps were taken to address the gaps.
Step 3: Define the internal flood scenarios	
Internal Flood Scenarios Report	The report will summarize internal flood scenarios that are to be modeled in the SPAR models.
Step 4: Model the internal flood scenarios	
Internal Flood SPAR Model	The internal flood scenarios will be incorporated into the SPAR model. This will include all necessary event trees, fault trees, post-processing rules, etc.
Step 5: Document the analysis	
Level 1 PRA for At-Power and Internal Floods Final Report	The report will incorporate the work completed under the previous steps and summarize the results and insights from the internal flood PRA.

12.1.2.5 Task Interfaces

The various technical steps of the Internal Flood Analysis are dependent on other technical elements for information in order for the step to be completed. These interfaces are as follows:

- Step 3 requires at least a draft version of the internal events model which is a product of the Level 1 for At-Power and Internal Events Analysis.

A draft version of the Level 1 for At-Power and Internal Events SPAR model is needed to determine appropriate definitions for internal flood scenarios. Any changes to the internal events model may impact the internal flood scenarios. It is assumed that much of the internal flood scenario definitions can be completed with a draft version of the model.

- Step 4 requires a final version of the internal events model which is a product of the Level 1 for At-Power and Internal Events Analysis.

A final version of the Level 1 for At-Power and Internal Events SPAR model is needed before the internal flood scenarios can be incorporated into the model. Any changes to the internal events model may impact the internal flood scenarios. In order to efficiently complete this task, the internal events models should be stable and complete before the internal flood scenarios are incorporated into the model.

Various tasks from other technical elements are dependent on products from this technical element. These interfaces are as follows:

- Step 4 results in the internal flood SPAR model which is information required by the Level 2 Reactor PRA, At-Power for Internal Floods.

The work on the Level 2 internal floods model will depend on having a completed Level 1 internal floods model.

12.1.2.6 References

A list of references that can and should be used in performing the work of the technical element is provided.

1. Vogtle documentation for Level 1 PRA for At-Power and Internal Floods.
2. EPRI Report No. 1021086 “Pipe Rupture Frequencies for Internal Flooding PRAs, Revision 2.”
3. NUREG/CR-6928 “Industry-Average Performance for Components and Initiating Events at U.S. Commercial Nuclear Power Plants.”

12.1.3 Subtask 1-1.3: Level 1 Reactor PRA for At-Power, Internal Fires

The internal fire analysis consists of the following four interrelated steps:

1. Review the internal fire analysis
2. Supplement the internal fire analysis, if necessary
3. Define the internal fire scenarios
4. Model and quantify the internal fire scenarios

The objective of this task is to review the Vogtle internal fire analysis information as supplied to the NRC by SNC for quality and completeness, and supplement this model as necessary for the inclusion into the full-scope Level 3 site PRA.

The internal fire analysis as discussed in Part 4 of the ASME/ANS PRA Standard consists of the following technical elements:

1. Plant partitioning
2. Equipment selection
3. Cable selection and location
4. Fire PRA plant response model
5. Qualitative screening
6. Fire PRA plant response model
7. Fire scenario selection and analysis
8. Ignition frequency
9. Quantitative screening

10. Circuit failures
11. Post-fire human reliability analysis
12. Fire risk quantification
13. Uncertainty and sensitivity analysis

12.1.3.1 Assumptions and Limitations

The following are a list of assumptions and limitations that define the scope and level of detail for this task:

- The Vogtle site has a Level 1 reactor at-power internal fire PRA. It is assumed that, the internal fire analysis by SNC, including all related technical elements, has been performed with sufficient documentation.

- It is assumed that the analysis performed for the Vogtle site PRA is technically adequate. If the analysis is found to be inadequate in some areas, then the staff will supplement the analysis as necessary.

- It is assumed that the supplemental analysis and information gathering performed by the staff will be minimal. If necessary, the staff may request additional information from the Vogtle plant staff. This may include additional documentation, drawings, plant walkdowns, and interviews with plant staff. If necessary, the staff may seek out additional references or input from subject matter experts, if deemed necessary.

- To complete work on Steps 3 and 4 (defining and modeling internal fire scenarios), it is assumed that a stable version of the Level 1 PRA for at-power internal events SPAR model will be available. The internal fire scenarios will be defined to be consistent with the internal events model assumptions and level of detail. The internal fire scenarios will also depend on many elements (i.e., event trees, fault trees and basic events) of the internal events PRA model.

12.1.3.2 Inputs

The information required to perform the associated steps are identified in Table 12-30. This information is succinct and transparent in enabling an independent QA and peer review.

Table 12-30 Required Inputs for Subtask 1-1.3

Input	Description
Vogtle internal fire PRA documentation	The complete documentation of the Vogtle internal fire PRA. This includes descriptions of the analyses for all internal fire PRA technical elements.
Vogtle internal fire PRA peer review or self-assessment	The peer review or self-assessment of the Vogtle internal fire PRA peer review documentation will assist the staff in establishing the technical adequacy of the fire PRA model.
Supplemental information, if deemed necessary.	If the staff's review identifies gaps in the Vogtle fire PRA, supplemental information will be requested. This may include additional documentation, drawings, plant walkdowns, and interviews with plant staff, and external references.

12.1.3.3 Analysis Steps

This section discusses the steps in implementing the fire PRA model for Vogtle:

Step 1 – Review the Internal Fire Analysis

The objectives of this step are to:

- Review the analysis done to support the Vogtle internal fire PRA.
- Assess the technical adequacy of each internal fire PRA technical element.

The staff will review the documentation for the Vogtle internal fire PRA. Each internal fire PRA technical element will be reviewed for technical adequacy and completeness. In addition, the staff will review the available peer review and/or self-assessment reports provided by SNC. The staff will refer to Regulatory Guide 1.200 and Part 4 of the Level 1/LERF PRA Standard (ASME/ANS RA-Sa-2009) for guidance on determining the technical adequacy of the Vogtle fire PRA model. For fire HRA specifically, the staff will refer to NUREG-1921, *EPRI/NRC-RES Fire Human Reliability Analysis Guidelines*.

Step 2 – Supplement the Internal Fire Analysis

The objectives of this step are to:

- Identify any areas of the internal fire analysis which is determined to be inadequate.
- Supplement the analysis with additional information to fill any gaps.

After reviewing the information provided by the SNC, the staff will identify any areas that require additional analysis. It is assumed that the analysis performed for the Vogtle site PRA is technically adequate, and minimal supplemental analysis and information gathering will be needed. If necessary, the staff may request additional information from the SNC. This may include additional documentation and drawings, and requests for plant walkdowns and interviews with plant staff. Furthermore, the staff may seek out additional references or input from subject matter experts, if deemed necessary.

Step 3 – Define the Internal Fire Scenarios

The objectives of this step are to define the set of internal fire scenarios to be incorporated into the Level 1, at-power PRA SPAR model.

After reviewing the Vogtle site internal fire PRA, the staff will define the internal fire scenarios to be included in the SPAR model for this project. The most straightforward approach for defining the internal fire scenarios is to take the scenarios directly from the Vogtle site internal fire PRA. However, the staff will likely need to make adjustments to the scenarios consistent with the SPAR modeling approach. The internal fire scenarios will need to be defined to be consistent with the SPAR internal events model assumptions and level of detail. Any adjustments that are made to the Vogtle internal fire scenarios will be justified and demonstrated to not significantly impact the model results. The INL staff will be consulted for input on the internal fire definitions, as they will be tasked with incorporating the scenarios into the SPAR model. The internal fire

scenario definitions will be documented in sufficient detail to support INL's work on incorporating the scenarios into the model. This will include, at a minimum:

- Scenario event tree names and descriptions
- Initiating event frequencies
- Existing initiating event groups that capture the fire impact
- List of affected equipment and basic events to model the effects

Step 4 – Model and Quantify the Internal Fire Scenarios

The objectives of this step are to incorporate the set of internal fire scenarios into the at-power Level 1 PRA for SPAR model and quantify the fire risk.

The internal fire scenarios defined in Step 3 are to be incorporated into the Level 1, at-power, internal events SPAR model. This task will include creating the event trees, fault trees, linking and post-processing rules, and basic events that are needed to model the scenarios. The INL staff will perform this work and ensure that the internal fire scenarios are consistent with the general SPAR modeling approach. The internal fire scenarios will depend on elements (i.e., event trees, fault trees, and basic events) of the internal events PRA model. Any changes to the internal events PRA model may impact the internal fire scenarios. The staff will review the internal fire SPAR model and results.

12.1.3.4 Documentation

The documentation will include the staff review of the internal fire technical elements, the descriptions of the internal fire scenarios that have been incorporated into the model, and the discussions of the results and insights based on the model. Table 12-31 provides details of documentation needs. The documentation (along with the identified inputs described in Section 12.1.3.2) are succinct and transparent in enabling an independent QA and peer review.

Table 12-31 Subtask 1-1.3 Documentation

Product	Description
Summary of Vogtle internal fire review	Document the assessment of the internal fire analysis technical adequacy and a summary review of the external peer review and/or self-assessment reports. If supplemental analysis was required, then describe what additional information was gathered and what steps were taken to address the gaps.
Internal fire scenarios report	Document the selection of the internal fire scenarios that are to be incorporated into the Vogtle SPAR models. Include descriptions of how the scenarios are directly modeled, grouped, subsumed, screened, etc.
Internal fire SPAR Model	Document the incorporation of the fire scenarios into the SPAR model. This will include description of all necessary event trees, fault trees, post-processing rules, and other related changes.
Level 1 PRA for at-power internal fire final report	Document quantification of the internal fire PRA, including insights on major contributors along wit the any sensitivity and uncertainty analyses.

12.1.3.5 Task Interfaces

The various technical steps of the internal fire analysis are dependent on other technical elements for information in order for the step to be completed. These interfaces are:

- Steps 3 input, this step requires the internal events SPAR model which is a product of the Level 1 reactor, at-power, internal events PRA.

- Step 4 results of the internal fire SPAR model, will become an input to the Level 2 reactor at-power Internal fire PRA.

12.1.3.6 References

1. Vogtle Documentation for Level 1 Reactor, At-Power Internal Fires PRA.
2. NUREG/CR-6850-EPRI TR-1011989: "EPRI/ NRCRES Fire PRA Methodology for Nuclear Power Facilities," September 2005.
3. NUREG/CR-6928 "Industry-Average Performance for Components and Initiating Events at U.S. Commercial Nuclear Power Plants," February 2007.
4. Regulatory Guide 1.200, Revision 2, "An Approach for Determining the Technical Adequacy of Probabilistic Risk Assessment Results for Risk-Informed Activities," March 2009.
5. ASME/ANS PRA Standard, "Addenda to ASME/ANS RA-S-2008 Standard for Level 1/Large Early Release Frequency Probabilistic Risk Assessment for Nuclear Power Plant Applications," ASME/ANS RA-Sa-2009.

12.2 Task 1-2: Level 2 Reactor PRA, At-Power for Internal Hazards

This task is divided into seven subtasks associated with each technical element of the analysis, as follows:

1. Subtask 1-2.1: Level 1/2 PRA Interface – Accident Sequence Grouping
2. Subtask 1-2.2: Containment Capacity Analysis
3. Subtask 1-2.3: Severe Accident Progression Analysis
4. Subtask 1-2.4: Probabilistic Treatment of Accident Progression
5. Subtask 1-2.5: Radiological Source Term Analysis
6. Subtask 1-2.6: Evaluation and Presentation of Results
7. Subtask 1-2.7: Level 2/3 PRA Interface

Some global assumptions, limitations, and other notes are covered in the following list:

- Rough timelines associated with completing this work suggest disconnects with the overall project schedule that will need to be resolved. Specifically, schedules developed for the full and a reduced set of the identified tasks have completion dates of Winter 2014 and Fall 2013. Similar disconnects currently exist with the overall resource requirements. The phrase, "Schedule/resource concerns may limit effort under this step." is used in the task descriptions below to identify affected steps.

- Internal events, flooding, and fire can be accommodated by the same Level 2 model. While arguably necessary to limit resource requirements, it's not clear that this is feasible (e.g., different equipment to mitigate, different human failure events, etc.)

- HRA tasks simply reference that portion of the report.

- The current approach assumes that the two reactor units are identical.

- This plan is intentionally vague right now about who will be doing the actual SAPHIRE modeling, awaiting other project developments. The effort for this may be under-represented.

- Some of the modeling capabilities proposed (namely decomposition event trees, replacement of partition rules with linkage rules, and use of phases) have not been rigorously exercised in SAPHIRE8 to date. Their use in this project relies on other ongoing work that is scheduled for completion in December 2012.

- The current plan does not include effort for the possibility of inadvertent criticality during core reflood, which is only of relevance for situations where the core is reflooded with unborated water following significant heatup of the fuel (to the point of melting poison material) but prior to core relocation. Rather, any specific simulations that lead to combinations of conditions where inadvertent criticality would be more likely to occur would be highlighted for potential future analysis.

12.2.1 Subtask 1-2.1: Level 1/2 PRA Interface – Accident Sequence Grouping

The Level 1/2 PRA Interface consists of five interrelated steps:

1. Development of extended Level 1 event trees
2. Development of plant damage state binning
3. Review the resulting plant damage states
4. Iteration on the Level 1 PRA modeling as necessary
5. Criteria for, and selection of, representative sequences

The objective of the first step is to add additional containment systems to "the end" of the Level 1 PRA sequences. The objective of the second step is to develop the plant damage states that will be used to merge the too-numerous number of Level 1 cutsets in to a manageable number of sequences that can be processed by the Level 2 PRA. The objective of the third step is to review the resulting plant damage states to ensure adequate transfer of information across the Level 1 / Level 2 interface, such that information important to the Level 2 analysis (e.g., initiator and support system dependencies, operator action dependencies) is transferred and that credit is not being given for equipment or operator actions that are not appropriate for that plant damage state (or visa versa). The objective of the fourth step is to re-visit and refine any Level 1 modeling assumptions which adversely affected the plant damage state binning (e.g., lack of adequate distinction in different accident evolutions arising from failure-to-run of AFW for a particular sequence(s) where that largely affects the timing of core damage). The objective of the fifth step is to establish the criteria that will be used for the selection of representative sequences, and selecting those sequences for each plant damage state.

12.2.1.1 Assumptions and Limitations

The following are a list of assumptions and limitations that define the scope and level of detail performed for this task.

- The Level 1/Level 2 interface will use plant damage state binning as a technique for keeping the modeling of the Level 2 PRA manageable.
- The Level 1/Level 2 interface will be a single SAPHIRE model using linked event trees, meaning that top events in the accident progression event tree will have access to fault tree/event tree information from the Level 1 PRA.
- The model will use linking rules and phases (SAPHIRE 8 capabilities), and will not utilize partitioning rules.
- To the extent possible, the model will limit the number of plant damage states to less than 20.

12.2.1.2 Inputs

The design, maintenance and operational information required in order to perform the associated steps of Level 1/2 PRA interface are identified in Table 12-32.

Table 12-32 Required Inputs for Subtask 1-2.1

Input	Description
Licensee LERF/Level 2 model	This item is needed for steps throughout this and other technical elements.
Containment system data	Design and operational information sufficient to identify the containment systems of relevance for various sequences, and to develop fault trees quantifying system reliability (which may include components that were not required for the Level 1 model).
Discussions with licensee PRA staff	

12.2.1.3 Analysis Steps

The Level 1/2 PRA Interface consists of five interrelated steps:

Step 1 – Development of extended Level 1 event trees

This step functionally adds additional top events associated with containment systems onto the end of the Level 1 event tree. (While these will technically be top events in a distinct event tree, use of SAPHIRE's transfer option functionally makes them part of the same tree.) These top events will define the initial availability of these systems at the time of core damage based on the support system information resident in the Level 1 PRA model. By doing this prior to plant damage state binning, this allows for consideration of containment system functionality prior to parsing cutsets into bins. Possible top events would include availability of containment heat removal prior to RWST depletion (via containment sprays or containment fan coolers, as

applicable), containment heat removal following RWST depletion (via containment fan coolers), and containment sprays as a means of fission product scrubbing. Depending on what is appropriate for the extended event tree development, it is anticipated that the Level 2 human reliability analysis (HRA) will address failure or branching events that represent mitigative actions or decision-making by operators and staff in the technical support center.

Step 2 – Development of plant damage state binning

This step includes the development of a plant damage state binning bridge tree and corresponding SAPHIRE implementation. As an example of what types of events might be considered in the PDS tree, the current Surry "feasibility" Level 2 SPAR model has the following top events:

- Containment isolation status?
- Containment bypass?
- Type of accident?
- If a transient, is it an SBO?
- If an SBO, during which phase of the accident is AC power recovered?
- If a transient, is there a consequential RCP seal LOCA or stuck-open relief valve?
- Is secondary side heat removal available?
- Is the RCS pressure at the time of core damage low, medium, or high?
- Are containment sprays available?
- Is containment heat removal available?
- Is in-vessel injection available prior to RPV failure?

Plant specific features that can affect the progression of severe accidents and containment response will need to be reviewed and added to the PDS attributes (e.g., containment fan coolers).

Note that plant damage state binning while represented as an event tree, does not have probabilities associated with the pathways (i.e., it sorts cutsets into bins rather than adding additional conditional probabilities). This is the reason that containment systems appear again in the PDS tree. Also note that prior (SAPHIRE7) Level 2 models utilized partition rules for plant damage state binning. The intent here is to utilize SAPHIRE8's capabilities to rely solely on linking rules for this process, analogous to what is being done under the SPAR Integrated Capabilities Model Project (Ma, 2012).

Step 3 – Review the resulting plant damage states

The binning of cutsets in to plant damage states represents the potential loss of information about sequence characteristics and dependencies. This project strives to use a semi-integrated Level 1/Level 2 model in order to minimize this effect. The present step will review the resulting plant damage state bins to ensure that information has not been unnecessarily lost. The draft Level 2 PRA standard provides examples of information that should be reviewed in the L1-A and L1-B supporting requirements.

More specifically, the review will focus on ensuring all the plant and containment system dependencies have been adequately accounted for, and ensure that only pre-core damage recovery actions are considered as part of the Level 1 PRA model. Any post-core damage

recovery actions that are to be considered will be identified and treated as part of the Level 2 model development, where appropriate.

The PDSs will also be reviewed to ensure that any probability/frequency cut-offs that may have been introduced as part of the Level 1 model do not eliminate potentially consequential sequences (note that this is unlikely to be an issue with regard to sequence truncation since contemporary SAPHIRE Level 1 models typically use truncation values of 10^{-9}/year or lower) . Furthermore, the review will also focus on re-binning any PDSs that may have insignificant contributions to total core damage frequency with similar impact on plant and containment system response, with other similar PDSs. This will be done in order to reduce the number of PDSs that will need to be propagated into the level-2 model.

Finally, the uncertainties in the PDS frequencies will be reviewed for consistency with the Level 1 PRA results.

Step 4 – Iteration on the Level 1 PRA modeling as necessary

It is expected that there will be cases where the Level 1 PRA, owing to its original focus on the binary end-state of core damage or no core damage, will have made modeling simplifications that require refinement to promote realism in the Level 2 PRA. This refinement could involve (1) changes to the Level 1 PRA model, (2) consideration of the limitation in developing the Level 2 model event trees, or (3) post-processing of the Level 1 results prior to inclusion into the Level 2 PRA. Examples where this may be the case include:

- Failure-to-run of auxiliary feedwater might need to be broken up into two categories representing different time-scales (even if AFW does not satisfy its Level 1 mission time, it can significantly delay the time of core damage if it operates).
- Failure-to run of an emergency diesel generator, analogous to the item above.
- Consideration of a cycling relief valve sticking open or sticking closed may need to be considered (e.g., some situations involving failure to secure ECCS or AFW can result in thousands of relief valve cycles).
- For spontaneous steam generator tube ruptures, finer parsing may be needed if only a single event tree is used in the Level 1, to distinguish the different responses associated with small leak rates and large leak rates (which can have significant effects on the timing of operator actions).

Schedule/resource concerns may limit effort under this step.

Step 5 – Criteria for, and selection of, representative sequences

The previous steps will take thousands to hundreds of thousands of cutsets and bin them in to a small group (ones to tens) of plant damage states. From each of these plant damage states, one (or a few) “representative” sequences will be selected for treatment in the Level 2 PRA. These sequences are surrogates for the numerous cutsets not explicitly carried forward in the accident progression analysis, and it is therefore important that they reflect the general characteristics of the numerous cutsets.

It’s also important that they not overly bias (in either a conservative or non-conservative direction) the risk associated with the Level 1 cutsets. In fact, across the scope of a Level 2 PRA there is no such thing as a conservative or non-conservative selection (each attribute can cause

one aspect of the results to be conservative (e.g., timing of release) while causing another aspect to be non-conservative (e.g., cumulative cesium environmental release magnitude). As such, there will be a focus in this step on being best-estimate (recognizing that this term has its share of ambiguity as well).

The criteria that will be considered in the selection of representative sequences that will be used in performance of plant-specific MELCOR analyses that will form the basis for quantification of accident progression event tree, source terms, and their associated uncertainties include:

- *Frequency Dominance* – sequences that have a significant contribution to core damage frequency, irrespective of their potential impact on containment response and radiological releases into the environment

- *Potential for Consequence Dominance* – sequences, irrespective of their core damage frequency contribution, that can potentially result in a significant impact on containment response and/or radiological releases to the environment

- *Unique Accident Progression Behavior* – sequences with potentially unique accident progression and radiological behavior.

- *Phenomenological Uncertainties* – sequences that can impact the quantification of uncertainties in accident response and radiological release and transport characteristics.

12.2.1.4 Documentation

Table 12-33 provides the details of documentation needs. The documentation (along with the identified inputs described in Section 12.2.1.2) are succinct and transparent in enabling an independent quality assurance (QA) and peer review.

Table 12-33 Documentation Needs for the Level 1/2 Interface – Subtask 1-2.1

Product	Description
PRA Model	Document the Level 1/2 interface, including, the PDS binning attributes, any frequency cut-off criterion, and identification of potential post-core damage recovery actions to be treated as part of the Level 2 model, PDS frequencies and associated uncertainties, and the technical basis for selection of PDSs for detailed analysis.
PRA Documentation	A section of the eventual model documentation describing the underlying basis for the event trees, developed in consideration of the requirements in HLR L1-C of the draft ANS Level 2 Standard (ANS, 2011).

12.2.1.5 Task Interfaces

The various technical steps of the Level 1/2 PRA Interface are dependent on other technical elements for information in order for the step to be completed. These interfaces are as follows:

- Step 1 and Step 4 require substantive completion of the Level 1 PRA model.

- Step 5 results in the initial portion of the Level 2 PRA model, which is required by the Subtask 1-2.4, “Level 2 Probabilistic Treatment of Accident Progression,” and Subtask 1-2.5, “Radiological Source Term Analysis.”

DRAFT

12.2.1.6 References

1. American Nuclear Society, Draft ANS 58.24 Standard Submitted for Ballot for Trial Use and Pilot Application, "Severe Accident Progression and Radiological Release (Level 2) PRA Methodology to Support Nuclear Installation Applications," December 2011.
2. Ma, Z. et al., "A New Approach to Quantify Level 2 SPAR Models in SAPHIRE 8," to be presented at the American Nuclear Society Winter Conference, San Diego, November 2012.

12.2.2 Subtask 1-2.2: Containment Capacity Analysis

This subtask consists of four (4) interrelated steps:

1. Assess preliminary failure modes and locations of interest
2. Development of a finite element model of the containment
3. Development of containment fragilities associated with severe accident conditions
4. Structural responses to severe accident conditions in adjoining buildings

The objective of the first step is to develop an initial state-of-knowledge about the containment's more likely failure modes and locations, to guide development of a finite element model. The objective of the second step is to develop a finite element model of the containment structure which is adequate for assessing the containment's capacity relative to over-pressure (long time-scales and dynamic) and over-temperature conditions. The objective of the third step is to apply this model, to arrive at cumulative distribution functions that can be used in specifying failure likelihoods/characteristics for use in the accident progression event tree, and to be used in establishing the containment failure response within the MELCOR model. The objective of the fourth step is to use available information to establish failure characteristics of the auxiliary building, again for use in the MELCOR model and accident progression event tree.

12.2.2.1 Assumptions and Limitations

The following are a list of assumptions and limitations that define the scope and level of detail performed for this task.

- This technical element assumes that structural effects of any relevant SSCs caused by the initiating event (e.g., flooding-induced damage to support systems for containment fan coolers) will have already been captured by the Level 1 PRA (i.e., this technical element only looks at failures due to severe accident conditions). An example of where this assumption might break down is damage to the TSC, which the Level 1 PRA would likely not consider.

- The finite element analysis will likely be conducted using the LS-DYNA computer code.

- Note: Vogtle has a pre-stressed concrete containment, and this type of design can be more difficult to analyze.

12.2.2.2 Inputs

The design, maintenance and operational information required in order to perform the associated steps of the containment capacity analysis are identified in Table 12-34. This information is succinct and transparent in enabling an independent QA and peer review.

Table 12-34 Required Inputs for Subtask 1-2.2

Input	Description
Structural design information	Detailed structural drawings of the containment and auxiliary building for creating the finite element model.
Containment loading and capacity	Discussions with licensee structural engineering staff on available structural engineering analyses.

12.2.2.3 Analysis Steps

The containment capacity analysis consists of four interrelated steps:

Step 1 – Assess preliminary failure modes and locations of interest

The Vogtle Level 2/LERF PRA includes an associated fragility curve and failure location information for the containment. Vogtle-specific information, information for other plants, and experimental results obtained from NRC-sponsored containment testing at Sandia National Laboratories will be reviewed to develop the initial set of failure information. This information will be used to guide work under subsequent steps. The results of the most recent containment leak rate tests will be reviewed.

Step 2 – Development of a finite element model of the containment

A finite element model will be developed, likely using the LS-DYNA software. The model will be designed to support the analysis described in the following steps, and in consideration of the expected failure locations obtained in the previous step. The initial model will only contain the containment structure itself, for use in the over-pressure/over-temperature fragility analysis. The model may then be modified to include major internal structures for calculations to develop a separate dynamic loading fragility response characterization (e.g., for hydrogen combustion events).

Schedule/resource concerns may limit effort under this step.

Step 3 – Development of containment fragilities associated with severe accident conditions

This analysis will produce the thresholds (in the form of fragility curves or other failure criteria) for static and dynamic failure of the containment, for use in the MELCOR model and accident progression event tree. Along with considerations of high temperature and high pressure, failure criteria are needed for dynamic events (most notably hydrogen combustion). Regulatory guidance associated with this type of analysis for concrete containments is provided in Regulatory Guide 1.136 (NRC, 2007) and Regulatory Guide 1.216 (NRC, 2010). While the latter is focused on meeting requirements for new light-water reactors, the discussion is still of relevance here. Additional recent and ongoing effort in this area has arisen from NRC-sponsored work at Sandia National Labs, as well as ongoing collaboration between the NRC and the Atomic Energy Regulatory Board of India. A key issue is the state-of-practice in translating finite element model results (stresses, strains, and deformations) into functions

describing containment leakage area (or rate) as a function of pressure. For dynamic effects, such as those arising from hydrogen combustion events, nonlinear dynamic explicit finite element analysis could be used (resources permitting). A key modeling challenge for the coupling of the dynamic loads with the structure capacity is accounting for the longer-term pressure asymptote after the initial peak pressure has decayed.

Schedule/resource concerns may limit effort under this step.

Step 4 – Structural responses to severe accident conditions in adjoining buildings

Some accident progressions in the Level 2 PRA will likely involve severe accident conditions in adjoining structures (most notably the auxiliary building). This situation can result from containment failure (creating a path to the adjoining structure), and interfacing systems LOCA, or a steam generator tube rupture. Available plant-specific and generic information will be reviewed to assess the structural response of the adjoining structures to these conditions, such that likely leak pathways and their affect on the eventual environmental release (e.g., via additional building holdup of fission products) can be taken in to account.

12.2.2.4 Documentation

Table 12-35 provides the details of documentation needs. The documentation (along with the identified inputs described in Section 12.2.2.2) is succinct and transparent in enabling an independent QA and peer review.

Table 12-35 Documentation Needs for the Containment Capacity Analysis – Subtask 1-2.2

Product	Description
List of Failure Modes and Locations	A list of those failure modes and locations that the finite element analysis model should be designed (in terms of mesh size, material properties, etc.) to mechanistically predict, along with references to the specific information sources that led to this list.
Finite Element Model Documentation	A section of the eventual project documentation describing the finite element model in sufficient detail to facilitate peer review.
Finite Element Analysis Documentation	Documentation of the finite element analysis, including the specific fragility curves that should be used in the MELCOR model and accident progression event tree.
Auxiliary Building Fragility Analysis Documentation	Documentation of auxiliary building fragility determination for over-temperature, quasi-static over-pressure, and dynamic over-pressure conditions, including the underlying information used to develop these fragilities.

12.2.2.5 Task Interfaces

The various technical steps of the Containment Capacity Analysis are dependent on other technical elements for information in order for the step to be completed. These interfaces are as follows:

- Step 4 is dependent on verification from other aspects of the project that the auxiliary building is the only ex-containment structure that needs structural capacity analysis.

- Steps 3 and 4 results in structural fragility information are required inputs to the Subtask 1-2.3, "Severe Accident Progression Analysis," and Subtask 1-2.4, "Probabilistic Treatment of Accident Progression."

12.2.2.6 References

1. U.S. Nuclear Regulatory Commission, "Design Limits, Loading Combinations, Materials, Construction, and Testing of Concrete Containments," Regulatory Guide 1.136, Washington, DC, March 2007.
2. U.S. Nuclear Regulatory Commission, "Containment Structural Integrity Evaluation for Internal Pressure Loadings Above Design-Basis Pressure," Regulatory Guide 1.216, Washington, DC, August 2010.

12.2.3 Subtask 1-2.3: Severe Accident Progression Analysis

The severe accident progression analysis consists of six interrelated steps:

1. SCALE analysis for decay heat and radionuclide inventory parameters
2. Development of a plant-specific MELCOR model
3. Accident progression modeling for the representative Level 2 sequences
4. Phenomenological evaluations for split fraction assignment and logic model construction
5. Evaluation of the impact of post-core damage recovery actions
6. Evaluation of equipment survivability

The objective of the first step is to develop the necessary information regarding fuel decay heat and radionuclide inventories (masses / activities of each major radioisotope) for use in the MELCOR model's COR and RN packages (as well as the Level 3 MACCS2 model). The objective of the second step is to develop a plant-specific MELCOR model of the Vogtle Unit 1 reactor coolant system, steam generators and steam lines, ECCS, containment and containment systems, SCRAM and engineered safety features actuation logic, and auxiliary building. The objective of the third step is to exercise this MELCOR model in performing accident progression analysis for the representative sequences associated with each plant damage state, for informing the development of the accident progression event tree and providing timelines for use by the HRA. The objective of the fourth step is to exercise this same MELCOR model, and other specialized separate effects tools (such as the TEXAS code for fuel-coolant interactions), for analyzing specific phenomena, to guide development of the Level 2 logic model and split fractions. In addition, as part of this step, any unique, plant-specific phenomenological issues that merit evaluation during severe accidents will be identified. The objective of the fifth step is to identify and to assess the impact of any post-core damage recovery actions (e.g., EDMGs, SAMGs, etc.) not already considered in the earlier steps that merit consideration as part of the event progression analyses. The objective of the sixth step is to evaluate what equipment will be adversely affected by the conditions (temperature, pressure, humidity, radiation, energetic events) associated with the accident, on a sequence-specific basis.

12.2.3.1 Assumptions and Limitations

The following are a list of assumptions and limitations that define the scope and level of detail performed for this task.

- Some phenomena will be dispositioned (i.e., not mechanistically modeled and/or not considered in the logic model) based on qualitative assessments employing past studies or experimental programs and consideration of the Vogtle design. As an example, a qualitative investigation could conclude that the cavity depth for Vogtle is insufficiently deep and/or that containment flooding is insufficiently likely to be carried out prior to reactor pressure vessel head lower failure, such that energetic ex-vessel steam explosions do not warrant mechanistic modeling or consideration in the logic model.

- Equipment survivability will utilize a screening approach, whereby equipment in areas where significant, adverse conditions are predicted will be considered failed and unavailable. Mis-interpretation of information from instrumentation which has failed will not be considered, except perhaps via sensitivity studies, under the assumption that insufficient information/knowledge will be available to predict how (high, within-range-value, low) the instrumentation will fail.

12.2.3.2 Inputs

The design, maintenance and operational information required in order to perform the associated steps of the severe accident progression analysis are identified in Table 12-36. This information is succinct and transparent in enabling an independent QA and peer review.

Table 12-36 Required Inputs for Subtask 1-2.3

Input	Description
Fuel design and operating history information	Detailed (likely to be proprietary) fuel design information and operating history in the current operating cycle, for use in the SCALE code system.
Design and operational information	Detailed SSC information (geometries, flow paths, component masses, system delivered flow rates, setpoints, etc.) for the primary side, secondary side, containment, and auxiliary building for creating the MELCOR model.
Periodic discussion with plant engineering or operations staff	Periodic phone calls (e.g., monthly) to confirm specific modeling assumptions associated with plant design or operation related to post-core damage behavior (e.g., confirming the details of containment hydrogen sampling post-accident are well-understood).
I&C information	Information related to the location environmental qualification of I&C called out in the SAMGs/EDMGs.
Plant-specific SAMGs and EDMGs	Also, any training materials / operational aids that will help to link the SAMGs/EDMGs with the specific plant parameters/criteria of relevance (e.g., SAMGs could refer to ongoing radioactive release above Emergency Plan *General Emergency* levels without sufficient detail to know what basis the TSC will use for this judgment).

12.2.3.3 Analysis Steps

The Severe Accident Progression Analysis consists of six interrelated steps:

Step 1 – SCALE analysis for decay heat and radionuclide inventory parameters

The purpose of this task is to take detailed fuel design information and utilize the ORIGEN-ARP routine in SCALE (with supporting routines), in order to calculate the quantity and composition of various radionuclides in each assembly. The output of SCALE would take the form of assembly-by-assembly radionuclide inventories (for the 69 radionuclides considered in a standard MACCS2 input), as well as the associated specific energies (W/kg) given off by each assembly (decay heat).

Step 2 – Development of a plant-specific MELCOR model

This step will take the existing Byron Unit 1 Level 1 PRA MELCOR model, and translate that model to represent the as-designed, as-operated Vogtle Unit 1 reactor. This will include modification of system geometries, system flow rates, component masses, flow areas, set-points, etc. using Vogtle-plant-specific information. Along with the routine modeling features that the model would have, additional focus will be placed on using diagnostic message (.dia, .out) and output streams (.ptf) to make available those plant parameters referenced by the SAMGs and EDMGs (e.g., containment pressure in a specified volume).

Along with the containment (and other structure) failure information developed in the Containment Capacity Analysis technical element, the model will need to treat the potential failure of RCS components due to high temperatures, most notably (i) seizure of relief valves and (ii) induced piping or steam generator tube failures. For the former issue, research conducted as part of the SOARCA study will be leveraged. For the latter issue, the NRC and the nuclear industry have been conducting research on the relative failure of pressurizer surge line, hot leg nozzles, hot leg piping, and steam generator tubes during station blackout scenarios for Westinghouse designs for more than two decades. The current state-of-practice in modeling these scenarios will be utilized (i.e., detailed counter-current flow simulation informed by 1/7th scale experiments and computational fluid dynamics analyses, component-by-component Larson-Miller creep rupture indices, plant-specific material properties, and tube flaw distributions based on either generic or plant-specific information).

Step 3 – Accident progression modeling for the representative Level 2 sequences

The Vogtle MELCOR reactor model developed in the preceding step will be applied to predict the accident progression of the various representative sequences. In cases where operator actions, system availabilities, or phenomenological responses are expected to create important bifurcations in the accident evolution, new simulations will be manually spawned at the time of the key events. The analyses will also include sensitivity studies to help formulate the uncertainties in key severe accident progression issues, including any relevant boundary conditions for analyses to be performed by other computer codes or tools (e.g., combustible gas compositions for use in assessment of loads resulting from a hydrogen combustion event). In this manner, the results of these analyses are expected to inform: (i) the timing of key events, (ii) the downstream effect of key events on accident progression, and (iii) the general structure of the APET(s).

Step 4 – Phenomenological evaluations for split fraction assignment and logic model construction

The phenomenological evaluations for split fraction assignment and logic model construction will follow a process that is based on the appropriate representation of phenomenological uncertainties through development of subjective uncertainty distributions that are guided by performance of sensitivity calculations, use of relevant test data, and results of applicable published studies. The quantification of split fractions may be performed outside of the event tree structure using a stress-strength interference concept, and where appropriate, alternative quantifications may be utilized. In areas where previously published studies have demonstrated an appropriate representation of failure likelihoods, these results will be reviewed for applicability to Vogtle, and if appropriate, may be utilized directly (e.g., in-vessel steam explosions). Special attention will be focused to those issues that are perceived to have a significant impact on early containment failure or containment bypass (e.g., high pressure melt ejection-induced direct containment heating, hydrogen combustion, induced SGTRs, etc). For more details refer to Section 12.2.4.

Schedule/resource concerns may limit effort under this step. More specifically, technical positions on phenomena (inclusion vs. exclusion; split fraction assignment) may be based on internal development and limited effort by the prime Level 2 PRA contractor. In addition, no funding would be available for consultation of external experts (e.g., Sandia, Argonne), beyond general support that may already be in place as part of the agency's more routine severe accident research.

Step 5 – Assessment of Post-Core Damage Recovery Actions

The step will review applicable post-core damage recovery actions that are included as part of the EDMGs and SAMGs, for those not already intrinsic in the accident progression sequence development covered above, to determine if there are merits for their consideration as part of the event progression analyses. See Section 12.2.4 for more discussion on human reliability analysis. In some case, the post-core damage recovery actions may be treated as sensitivity issues.

Step 6 – Evaluation of equipment survivability

This step will take the results of preliminary MELCOR accident progression analyses (temperatures, pressures, occurrence of energetic events), a list of the key instrumentation needed by operators for executing the SAMGs and EDMGs (stemming from preliminary HRA work to identify procedure pathways), and SSCs credited in the logic model, and consider whether the instrumentation or SSCs would be affected by harsh environmental conditions. Information on the specific failure characteristics of most of this equipment is not expected to be available, and will need to be assessed based on a mix of the facility's design basis for equipment qualification (namely compliance with 10 CFR 50.34(f)(2)), consideration of available information from past studies, and subjective judgment. What complicates this situation is that assuming failure of the equipment is often not conservative in some, or most, aspects (for instance, assuming containment sprays are inoperable isn't conservative if those sprays would have been used and would have de-inerted containment during a point in the accident that would lead to a hydrogen combustion event).

Methodologies for treating equipment survivability in severe accidents will be reviewed, including those that are dated such as NUREG/CR-5444 (NRC, 1992) and those that are more

contemporary such as the methodologies used by advanced LWR vendors in their Chapter 19 design certification documents (e.g., U.S. EPR Design Certification Document (Areva, 2012)), with associated NRC Safety Evaluation Reports. There may also be an opportunity to leverage ongoing activities associated with a Japan Lessons Learned Tier 3 activity entitled, "Enhanced Reactor and Containment Instrumentation Withstanding Beyond-Design-Basis Conditions," whose program plan can be found in Enclosure 3 of SECY-12-0095 (NRC, 2012).

A closely related issue is the treatment of RCS components due to high temperatures, and this issue is discussed above in the step associated with development of a plant-specific MELCOR model.

12.2.3.4 Documentation

Table 12-37 provides the details of documentation needs. The documentation (along with the identified inputs described in Section 12.2.3.2) are succinct and transparent in enabling an independent QA and peer review.

DRAFT

Table 12-37 Documentation Needs for the Severe Accident Progression Analysis – Subtask 1-2.3

Product	Description
Radionuclide Inventory Characterization	Documentation on the inputs used, the SCALE routines used and their respective modeling options (e.g., which ENDF cross-section library is used), and the outputs of interest, in a format that can be readily included in the Level 2 PRA model documentation. Generate a spreadsheet with the decay heat, isotopic masses, and isotopic activities in a format that can be used for MELCOR ring-by-ring and chemical class-by-chemical class inputs.
MELCOR Model	A QA'd and commented MELCOR 2.x model.
MELCOR Model Shakedown Analysis	A stand-alone report demonstrating shakedown of the MELCOR model for a handful of different accident types.
MELCOR Model Calculation Notebook	An accompanying calculation notebook documenting all aspects of the input model development.
Calculation Records	Documentation of calculations performed for the PDS representative sequences, including text description, tabular timing results, and graphical accident signatures for key parameters, akin to the documentation in NUREG-1935 and NUREG-1953. This documentation should be in a format that is suitable for inclusion (in part or in whole) in the Level 2 PRA documentation.
Phenomenological Evaluations	A White Paper providing background and modeling recommendations for each of the PWR-specific phenomena covered in Table 3.5-8 of the draft ANS Level 2 PRA Standard (ANS, 2011), and any additional phenomenological issues that are identified as part of the present study.
Calculation Records	Documentation for MELCOR or other code analyses performed to investigate specific phenomena and/or generate split fractions.
Post-Core Damage Recovery Actions	Document all relevant post-core damage recovery actions, including the basis for human error probabilities (HEPs) used in the analyses, where applicable. Any conservative place-holder HEPs should also be identified and discussed.
Characterization of Containment Environmental Conditions	A report section describing the environmental conditions for the calculations performed in Step 3, in terms of pressure, temperature, humidity, amount of fission products deposited / volatilized, and energetic events, for each major spatial area in the model (where instrumentation is known to reside).
Evaluation of Equipment Survivability	An evaluation of the conditions described above on the I&C germane to post core-damage accident behavior (i.e., the I&C equipment called out in the SAMGs or EDMGs) with recommendations of what I&C should be considered failed, and at what point in the simulation it failed.

12.2.3.5 Task Interfaces

The various technical steps of the severe accident progression analysis are dependent on other technical elements for information in order for the step to be completed. These interfaces are as follows:

- Step 3 requires completion of the Level 1 PRA, as well as the Subtask 1-2.1, "Level 1/2 Interface."
- Step 2 will produce a MELCOR model which will also be used for Level 1 PRA success criteria.
- Steps 3 and 6 produce accident and failed I&C information necessary for the Human Reliability Analysis.
- Step 5 requires iteration with the Human Reliability Analysis.
- Steps 3 through 6 produce information needed for the Subtask 1-2.4.

12.2.3.6 References

1. Areva, Final Safety Analysis Report Chapter 19, "Probabilistic Risk Assessment and Severe Accident Evaluation," March 2012.
2. U.S. Nuclear Regulatory Commission, "Instrumentation Availability During Severe Accidents for a Boiling Water Reactor with a Mark I Containment," NUREG/CR-5444, February 1992.
3. U.S. Nuclear Regulatory Commission, "Tier 3 Program Plans and 6-Month Status Update in Response to Lessons Learned from Japan's March 11, 2011, Great Tohoku Earthquake and Subsequent Tsunami," SECY-12-0095, July 13, 2012.

12.2.4 Subtask 1-2.4: Probabilistic Treatment of Accident Progression

This subtask consists of seven interrelated steps:

1. Data analysis for components/systems not considered in the Level 1 PRA
2. Construction of accident progression event trees
3. Development of support trees
4. Human reliability model development
5. Human reliability analysis
6. Level 2 model quantification
7. Uncertainty characterization

The objective of the first step is to develop reliability estimates for SSCs not considered in the Level 1 PRA (e.g., core-exit thermocouples, hydrogen sampling system, the Technical Support Center data system). The objective of the second step is to develop the set of accident progression event tree top events. The objective of the third step is to develop the support trees (e.g., fault trees, decomposition event trees) needed to support the APET top events. The objective of the fourth step is to modify the Level 1 at-power human reliability analysis model for use in Level 2 PRA (e.g., developing a Level 2 PRA analogy for human failure events). The objective of the fifth step is to exercise the human reliability analysis for the representative

sequences from each PDS. The objective of the sixth step is quantification of the Level 2 PRA, including handling of large failure probabilities (and the associated issues they can cause during quantification). The objective of the seventh step is to identify sources of parameter and model uncertainty, characterize these sources via distribution assignment for basic events and split fractions, and use of sensitivity analyses to assess the effects of *key* sources of uncertainty.

12.2.4.1 Assumptions and Limitations

The following are a list of assumptions and limitations that define the scope and level of detail performed for this task.

- APETs will include relevant system availability (not considered earlier in the model), operator actions, and phenomenological top events.

- Identification of human actions, the accident progression analysis, and construction of the APET will be necessarily iterative. The initial model will simply use placeholders for human error probabilities, until actual values are available.

12.2.4.2 Inputs

The design, maintenance and operational information required in order to perform the associated steps of the Probabilistic Treatment of Accident Progression are identified in Table 12-38. This information is succinct and transparent in enabling an independent QA and peer review.

DRAFT

Table 12-38 Required Inputs for Subtask 1-2.4

Input	Description
Reliability Data on SSCs that are modeled in the Level 2 PRA, but not included in the Level 1 PRA.	Any data for the identified subset of components that is not included in the Level 1 PRA, and may not be available to NRC via its own data collection efforts, which include LERs and EPIX.
Input for the APET development	Periodic phone calls (e.g., monthly) to confirm specific modeling assumptions associated with plant design or operation related to post-core damage behavior (e.g., confirming that the electrical dependency of a particular component or instrument channel is well-understood).
Procedures on SAMG and EDMG	Operator actions and timing for the post-core damage operator actions for HRA.
Plant Operation and design	Discussions with plant engineering or operations staff, to better understand the potential range of uncertainties and their effects, it is possible that interactions would be needed with the licensee to ask specific, detailed questions regarding plant operation and design.

12.2.4.3 Analysis Steps

The Probabilistic Treatment of Accident Progression consists of seven (7) interrelated steps:

Step 1 – Data analysis for components/systems not considered in the Level 1 PRA

Some SSCs of relevance to the Level 2 PRA are also of relevance to the Level 1 PRA (e.g., containment fan coolers) and thereby should be covered by the data analysis for the Level 1 PRA. Some SSCs relevant to the Level 2 PRA (e.g., TSC unavailable due to maintenance) are covered by NRC reporting requirements, and thereby data-based failure rates could be developed. Yet other SSCs of relevance to the Level 2 PRA are not covered by NRC reporting requirements and will necessarily need to be based on assumptions or generic failure rates for similar SSCs. A determination will be made on a case-by-case basis as to which approach is appropriate for the given basic event or split fraction, informed in part by the expected significance of the item.

Schedule/resource concerns may limit effort under this step.

Step 2 – Construction of accident progression event trees

Questions in the APET will be organized approximately in a chronological or causal order. In addition to any introductory questions needed to address specific information transfer concerns not covered by the integrated Level 1/Level 2 model, four main time frames may be distinguished in the set of questions/top events:

- *Very Early Time Frame:* This period starts from the beginning of core damage and lasts up until (but not including) the time of vessel breach. Potentially important phenomena include hydrogen combustion; In-Vessel Steam Explosions (IVSEs); and temperature-

induced creep rupture of the hot leg (nozzles and/or piping), pressurizer surge line, or steam generator tubes.

- *Early Time Frame:* This period includes the time of vessel breach as well as the time associated with the containment transient just after vessel breach (typically a duration of less than 30 minutes). Potentially important phenomena accompanying vessel breach include Direct Containment Heating (DCH), hydrogen combustion, vessel rocketing, and Ex-Vessel Steam Explosions (EVSEs). Some of these phenomena can be ruled out as potential causes for containment failure for Vogtle but can still affect the conditions inside containment during this period.

- *Intermediate Time Frame:* This period begins at the end of vessel blowdown (i.e., the end of the Early Time Frame), and lasts for approximately 8 to 12 hours thereafter. The duration of this time frame is chosen such that it includes the majority of the ex-vessel core debris oxidation and fission product release. Potentially important phenomena in this time frame include ex-vessel steam explosions and combustion of hydrogen and/or carbon monoxide generated during MCCI.

- *Late Time Frame:* This period extends from the end of the intermediate time frame until the end of the Level 2 PRA mission duration (e.g., 48 hours from the time of scram or accident initiation or until a stable configuration is achieved whichever is longer). The potentially important phenomena in this time frame include quasi-static pressurization of the containment due to MCCI and decay heat, revaporization of radionuclides from surfaces (only relevant to source term analysis), and possible Basemat Melt-Through (BMT) during MCCI.

For each phase, the relevant system-related and phenomenological issues will be considered, including dependencies as applicable.

Schedule/resource concerns may limit effort under this step.

Step 3 – Development of support trees

While some split fractions will be derived values (with no underlying logic model), the expectation is that many will have underlying support trees. Here, the term support tree is used to describe a range of possibilities, but most notably fault trees and decomposition event trees. SAPHIRE8 has the capability to model both of these types of trees as the underlying logic for a top event split fraction. In general, fault trees are expected to be used for system availabilities while decomposition event trees are expected to be used for phenomenological events.

Schedule/resource concerns may limit effort under this step.

DRAFT

Step 4 – Human reliability model development

This topic is covered in Section 9.

Step 5 – Human reliability analysis

This topic is covered in Section 9.

Step 6 – Level 2 model quantification

Quantification of the Level 2 model will be performed using SAPHIRE8's general quantification techniques. Special care will need to be taken given the issues that arise with many quantification techniques when high failure rates are present. However, it is anticipated that these issues can be addressed using the same approach used in quantifying the seismic Level 1 PRA model (which may include direct solution for specified portions of the model, use of Binary Decision Diagrams, etc.) The quantification process will generally follow the analogies of the Level 1/LERF Standard's Quantification (QU) requirements, which are in turn referenced in the draft Level 2 Standard's Probabilistic Treatment (PT) requirements.

Step 7 – Uncertainty characterization

Level 1 PRA revolves around a Boolean-based logic model, relying heavily on data-based component failure probabilities and the use of success criteria to represent offline deterministic simulations. The Level 3 portion of a Level 3 PRA revolves around deterministic offsite consequence simulations, with probabilistic sampling to generate the needed conditional probability outputs. The Level 2 PRA is the transition point between these two technologies, and is a mix of logic modeling and deterministic simulation. This situation manifests differences in terms of capturing uncertainty between a fundamentally Boolean model and a fundamentally simulation-based model. A Boolean model makes it much more straight-forward (and less costly) to capture uncertainty, but is arguably poorly suited for quantifying accident progression modeling uncertainty (and this is the reason that contemporary Level 1 PRA models rely on consensus models or sensitivity analyses to consider uncertainty in the success criteria or other deterministic inputs (e.g., seal LOCA modeling)).

It's also important to recall that there are fundamentally two related but distinct types of uncertainty in the Level 2 PRA. The first is the uncertainty associated with the probabilistic model which manifests itself in the uncertainty in release frequencies (e.g., the frequency of release category 4 is $1 \cdot 10^{-5}$/yr with a 5th and 95th percentile of $2 \cdot 10^{-7}$/yr and $8 \cdot 10^{-5}$/yr respectively). The second is the uncertainty in the deterministic simulations which manifests itself in the source term characteristics (e.g., the start of release for release category 4 is 8 hours, with a 5th and 95th percentile of 11 hours and 5 hours respectively). To complicate matters, uncertainty associated with the deterministic simulation can be represented in the uncertainty in the probabilistic model (e.g., 10 closely-related simulations were run and a hydrogen deflagration occurred in 1, so the split fraction for hydrogen deflagration will be 0.1) and vice versa (the relief valve will be assumed to stick open after 70 cycles because that is the median of the probability density function for the valve's failure probability).

With the above in mind, there is no plan to formally propagate uncertainty through the Level 2 analysis (beyond the plant damage state bins) for three reasons. First, the resources associated with ascribing meaningful uncertainty distributions to all sources of uncertainty in the Level 2 PRA is prohibitive, given the resources available for conducting the work. Second, the

correlation between dependent sources of phenomenological uncertainty (e.g., the effect of uncertainty in the size of an induced containment leak correlated to the uncertainty in the rate of de-inerting due to steam condensation) can be difficult to mathematically capture, more-so than the analogous state-of-knowledge correlation used prevalently in Level 1 PRA for assessing correlation effects on data-driven basic events. Finally, there is some debate amongst the technical community about the appropriateness of combining different types of uncertainty within the Level 2 PRA. This approach (identification and characterization, but not propagation) is consistent with Capability Category II of the current draft of the ANS Level 2 PRA Standard.

As such, the proposed approach will be to identify key sources of uncertainty (i.e., those sources whose effect on the results could be expected to change the analyses' conclusions), and for these sources to characterize their effect via sensitivity analysis. Note that a workshop focusing on sources of PRA uncertainty took place in February 2012 (NRC, 2012), with a session focused on Level 2 PRA uncertainty. That group attempted to build off a list of LERF PRA uncertainties identified in Appendix A (Tables A-1 and A-4) of EPRI TR-1016737 (EPRI, 2008). Both of these documents will be used for identifying sources of uncertainty in this project.

Schedule/resource concerns may limit effort under this step.

12.2.4.4 Documentation

Table 12-39 provides the details of documentation needs. The documentation (along with the identified inputs described in Section 12.2.4.2) are succinct and transparent in enabling an independent QA and peer review.

DRAFT

Table 12-39 Documentation needs for the Probabilistic Treatment of Accident Progression – Subtask 1-2.4

Product	Description
List of additional SSCs Considered in the Level 2 PRA	A list of SSCs that require development of failure or availability estimates, beyond those considered in the Level 1 PRA or Level 1/2 PRA Interface technical element.
Failure/availability probabilities	A report section documenting data analysis or other methods (using operating experience when feasible) for estimating failure or availability probabilities and distributions, for relevant SSCs.
APET Logic Model	A SAPHIRE model containing the APETs, with transfers from the extended Level 1 event trees. A report section documenting the basis for the selection of top events for each APET. A SAPHIRE model containing the support trees, with linkages to the APET tops that they support. A report section documenting the basis for the construction of the various support trees.
Human Reliability Analysis	Document the human actions, and associated human error probabilities.
Level 2 PRA Model and Quantification	A SAPHIRE model containing the complete Level 2 PRA logic model. A report section documenting the method(s) of quantification and quantification modeling selections (e.g., truncation value).
Identification and Characterization Parameter and Modeling Uncertainties	A report section describing those aspects of the logic model and underlying deterministic models which have important parameter and modeling uncertainties. Characterization of the above uncertainties in terms of parameter distributions, split fraction intervals, or alternative modeling choices.
Sensitivity Analyses	Sensitivity analyses showing the effect on key figures-of-merit (e.g., large early release frequency, large release frequency) of the *key* sources of parameter and modeling uncertainty.

12.2.4.5 Task Interfaces

The various technical steps of the probabilistic treatment of accident progression are dependent on other technical elements for information in order for the step to be completed. These interfaces are as follows:

- Steps 2 and 3 require completion of the Level 1 PRA, as well as the Subtask 1-2.1, “Level 1/2 Interface.”

- Step 7 results in release frequencies and APET end-states, both of which are needed by the Level 2/3 PRA Interface technical element.

- The sensitivity analysis portion of Step 7 requires completion of the radiological source term results of the Level-2 PRA (Section 12.2.5) in order to use LERF and LRF as figures-of-merit.

12.2.4.6 References

1. EPRI TR-1016737, "Treatment of Parameter and Modeling Uncertainty for Probabilistic Risk Assessments," Electric Power Research Institute, December 2008.
2. U.S. Nuclear Regulatory Commission, "2/29/2012 – 3/1/2012 Meeting Presentations: PRA Uncertainty Workshop," Rockville, Maryland, March 2012, ML120680425. *Note that an associated NUREG/CR is under development*.

12.2.5 Subtask 1-2.5: Radiological Source Term Analysis

The Radiological Source Term Analysis consists of three interrelated steps:

1. Definition of the release category binning logic
2. Development of source terms for the various release categories
3. Consideration of uncertainties in the source term development

The objective of the first step is to develop the logic (event tree or otherwise) that will be used for binning the APET end-states in to release categories for use in the Level 3 PRA. The objective of the second step is to take the MELCOR source terms that are a natural outcome of the PDS representative sequences analyses and sensitivity analyses, and specify which source term(s) (or what modified source term(s)) will be those associated with each release category. The objective of the third step is to re-visit the issue of uncertainty in the context of any important source term uncertainties that were not captured in the Probabilistic Treatment technical element (i.e., in the APET).

12.2.5.1 Assumptions and Limitations

The following are a list of assumptions and limitations that define the scope and level of detail performed for this task.

- For the internal hazards Level 2 PRA, there will be 10 – 20 release categories.

- Metrics (namely large early release frequency) will be based on interim criteria, and the need to re-define these criteria will be re-evaluated once the Level 3 results are available.

12.2.5.2 Inputs

The inputs to this subtask are the source term products from Subtask 1-2.3 and 1-2.4.

12.2.5.3 Analysis Steps

The Radiological Source Term Analysis consists of three (3) interrelated steps:

Step 1 – Definition of the release category binning logic

As with the PDS binning, the release category binning steps represents another phase in the analysis where the explosion of sequences needs to be parsed back in to a manageable set of sequences. Criteria will be developed to accomplish this, likely using the warning time (the time between the declaration of a General Emergency and the time that a significant release of fission products to the environment occurs), the cumulative I-131 release fraction and the cumulative Cs-137 release fraction as discriminators. The target will be to develop a set of a couple of tens of release categories.

Schedule/resource concerns may limit effort under this step.

Step 2 – Development of source terms for the various release categories

For each release category, a representative source term must be identified (akin to the representative sequence(s) for each PDS). Again, the intent will be to develop best-estimate source terms (i.e., no attempt to bias the source term selection to bound the offsite consequence results).

These source terms will be developed using the results of plant-specific MELCOR calculations, to calculate the various steps in the release and transport of radionuclides from the fuel to the environment. The release factors that will be evaluated using the results of MELCOR calculations will include:

- Release from fuel to the reactor coolant system
- Retention inside the reactor coolant system
- Revaporization fraction of the previously deposited radionuclides
- Retention of fission products in water pools in the containment and or environment (e.g., water build-up over the location of break for ISLOCA scenarios, if applicable)
- Release of remaining radionuclides during MCCI
- Retention of MCCI releases by any overlying water pools
- Retention of radionuclide inside containment
- Retention of radionuclide inside the auxiliary building or other adjoining structure, if applicable
- Retention of radionuclide on the secondary side of steam generators, for SGTR events

These physical processes are covered by the physical models in the MELCOR code.

To the extent possible, a specific MELCOR calculation will be performed to determine the source term for each major release category. It may be necessary for some release categories to be assigned a surrogate release based on results for an otherwise similar release category together with logical argument. In addition, post-calculation adjustment of source terms may be necessary in cases where MELCOR yields inconsistent results (e.g., lower releases from a calculation with MCCI vs. an otherwise identical calculation without MCCI). In these cases, clear logical arguments will be provided for assignment of all surrogate and adjusted source terms.

Schedule/resource concerns may limit effort under this step.

Step 3 – Consideration of uncertainties in the source term development

This step is analogous to the final step under the probabilistic treatment technical element (i.e., Subtask 1-2.4), and will follow the same approach as is outlined in Step 7 under Subsection 12.2.4.3, above. The quantification process will involve the development of subjective uncertainties associated with each release factor that are listed in Step 2..This process will be limited in scope, and it will attempt to use the results of plant-specific MELCOR sensitivity calculations, to describe the uncertainties in the source term predictions. Alternatively, the Level 2 PRA analysts will develop uncertainty distributions based on the available literature information.

Schedule/resource concerns may limit effort under this step.

12.2.5.4 Documentation

Table 12-40 provides the details of documentation needs. The documentation is succinct and transparent in enabling an independent QA and peer review.

DRAFT

Table12-40 Documentation Needs for the Radiological Source Term Analysis – Subtask 1-2.5.

Product	Description
Logic Model	A SAPHIRE model containing the release category binning logic (in event tree, or other, format), with transfers from the APET end-states. A report section documenting the basis for the selection of the release category binning.
Representative Source Terms	A report section documenting the selection of representative source terms for each release category, based on results from the MELCOR accident progression analyses and sensitivity analyses.
Identification and Characterization Parameter and Modeling Uncertainties	A report section describing those aspects of the source-term-specific logic model and underlying deterministic models which have important parameter and modeling uncertainties, and are not adequately addressed in the Probabilistic Treatment technical element. Characterization of the above uncertainties in terms of parameter distributions, split fraction intervals, or alternative modeling choices.
Sensitivity Analyses	Sensitivity analyses showing the effect on key figures-of-merit (e.g., large early release frequency) of the *key* sources of parameter and modeling uncertainty.

12.2.5.5 Task Interfaces

The various technical steps of the radiological source term analysis are dependent on other technical elements for information in order for the step to be completed. These interfaces are as follows:

- Step 1 requires inputs from the MELCOR analyses covered under the Subtask 1-2.3.
- Step 2 results in the uncertainties associated with radiological releases needed for the Level 3 risk analysis. It interfaces with Step 7 under Subsection 12.2.4.3.

12.2.5.6 References

None.

12.2.6 Subtask 1-2.6: Evaluation and Presentation of Results

The Evaluation and Presentation of Results consists of two (2) interrelated steps:

1. Consolidation of the interim Level 2 PRA model documentation
2. Consolidation of the final Level 2 PRA model documentation

The objective of the first step is to develop the interim Level 2 PRA model documentation using the products developed under the previous technical elements in such a manner that portions of

the report can be utilized for the final project report, and highlighting the limitations of the model. The objective of the second step is to finalize the above documentation, incorporating changes brought about by internal and external review.

12.2.6.1 Assumptions and Limitations

No assumptions or limitations are currently identified.

12.2.6.2 Inputs

The inputs to this subtask are the products from Subtasks 1-2.1 through 1-2.5.

12.2.6.3 Analysis Steps

The Evaluation and Presentation of Results consists of two interrelated steps:

Step 1 – Consolidation of the interim Level 2 PRA model documentation

As the name implies, this step documents the work performed in the preceding technical elements/tasks to arrive at a draft model and report that support review and refinement. This step will follow the documentation guidelines developed for the overall project.

Step 2 – Consolidation of the final Level 2 PRA model documentation

This step documents the work performed in the preceding technical elements/tasks to arrive at a final model and report that support use and refinement. This step will follow the documentation guidelines developed for the overall project.

12.2.6.4 Documentation

Table 12-41 provides the details of documentation needs. The documentation is succinct and transparent in enabling an independent QA and peer review.

DRAFT

Table 12-41 Documentation for Subtask 1-2.6

Product	Description
Interim model report	A report that consolidates the products developed under the previous technical elements and evaluates the model results, in such a manner that portions of the report can be utilized for the final project report, and highlighting the limitations of the model
Final model report	A final version of the above report which incorporates changes brought about by internal and external review.

12.2.6.5 Task Interfaces

The various technical steps of the evaluation and presentation of results are dependent on other technical elements for information in order for the step to be completed. These interfaces are as follows:

- Step 1 requires completion of all previous technical elements within the Level 2 PRA.
- Overall project documentation is dependent upon completion of Steps 1 and 2.

12.2.6.6 References

None.

12.2.7 Subtask 1-2.7: Level 2/3 PRA Interface

The Level 2/3 PRA Interface consolidates the release category information in a format conducive for use by the Level 3 PRA analysts. The objective of this subtask is to catalogue the characteristics of each release category (release frequency, time-dependent chemical class-specific release fractions, sequence information sufficient for establishing declaration of emergency action levels, release energy and elevation, and aerosol size distributions).

12.2.7.1 Assumptions and Limitations

The following are a list of assumptions and limitations that define the scope and level of detail performed for this task.

- Only atmospheric release information is considered in the Level 2 and Level 3 analysis.
- For the at-power reactor analysis, release fractions are only needed on a chemical-class-specific basis.

12.2.7.2 Inputs

The inputs to this subtask are the products from Subtask 1-2.5.

12.2.7.3 Analysis Steps

The Level 2/3 PRA Interface consists of one (1) step:

Step 1 – Consolidation of the release category information in a format conducive for use by the Level 3 PRA analysts

This step takes the information of relevance to the Level 3 PRA practitioners and consolidates in an easy-to-use manner. This includes the release categories in electronic format (for input to MELMACCS), information about the progression through the emergency action levels for each release category (which will have been a necessary development to support the release category binning), information about the event progression such as the occurrence of energetic events for each release category (to inform decisions about emergency response modeling), etc. This information will be used as inputs to the Level 3 PRA (i.e., consequence analysis) in Section 12.3 of the TAP.

12.2.7.4 Documentation

Table 12-41 provides the details of documentation needs. The documentation is succinct and transparent in enabling an independent QA and peer review.

Table 12-41 Documentation for Subtask 1-2.7

Product	Description
Level 2/3 PRA Interface Report	Describes the set of information needed by the Level 3 PRA analysts, on a release category-specific basis. For each release category, this includes release frequency, time-dependent chemical class-specific release fractions, sequence information sufficient for establishing declaration of emergency action levels, release energy and elevation, and aerosol size distributions.

12.2.7.5 Task Interfaces

The subtask interfaces with Level 3 PRA, providing source term characteristics from each release category.

12.2.7.6 References

None.

12.3 Task 1-3: Level 3 Reactor PRA, At-Power for Internal Hazards

Level 3 PRA assesses the consequences of releases of radioactive materials on the surrounding population and environment. The Level 3 PRA task is divided into 9 subtasks associated with each technical element of the analysis. These include:

1. Subtask 1-3.1 – Transition from the Radionuclide Release to Level 3
2. Subtask 1-3.2 – Protective Action Parameters and Other Site Data
3. Subtask 1-3.3 – Meteorological Data
4. Subtask 1-3.4 – Atmospheric Transport and Dispersion
5. Subtask 1-3.5 – Dosimetry
6. Subtask 1-3.6 – Health Effects
7. Subtask 1-3.7 – Economic Factors

8. Subtask 1-3.8 – Quantification and Reporting
9. Subtask 1-3.9 – Risk Integration

The consequence analysis will primarily be based on the radioactive materials releases to the atmosphere. The analysis will be performed using the WinMACCS/MACCS2[17] computer code [1], which was specifically developed to evaluate off-site consequences from a hypothetical release of radioactive materials into the atmosphere.

For each of these elements, the information that will be provided include the assumptions and limitations; input needs; analysis steps; task interfaces; and and quality assurance. The discussions herein focus on the Level 3 PRA for reactor at power for internal events. In addition, when a discussion is also common to other radioactive sources such as spent fuel pool (SFP) and dry cask storage (DCS), they will be parenthetically mentioned.

12.3.1 Subtask 1-3.1: Transition from the Radionuclide Release to Level 3

This subtask discusses the elements required for consequence analysis. The Level 2 PRA characterizes radionuclide releases to the environment resulting from each accident sequence that contributes to the total core damage frequency. In this section, the approach described is the implementation of the specific aspects of the element that is related to the consequence analysis for the reactor at power for internal events. This subtask consists of four steps namely: (1) development of inventory data, (2) implementation of source term data, (3) the development and radiological release bins, and (4) identification of the sources of model and parameter uncertainties.

12.3.1.1 Assumptions and Limitations

The following are a list of assumptions and limitations that define the scope and level of details of analyses that are performed:

- Level 2 PRA generates radionuclide-specific release characteristics based on the results of the accident progression analyses, including the quantity and form; the timing and duration; and the energy and the height of each release. Radionuclide-specific considerations may enable capturing releases from fuel with a distribution of different burnup/power levels.

- Reactor core radionuclide inventory is determined using an appropriate computer code (in this case the ORIGIN2 [2]/SCALE [3] computer code package).

- The number of release categories will be limited to 30.

12.3.1.2 Inputs

The design, maintenance, and operational information required to perform the associated steps are identified in Table 12-42. This information should be succinct and transparent to enable an independent quality assurance (QA) and peer review.

Table 12-42 Needed Inputs for Subtask 1-3.1

[17] WinMACCS is a window based code with a graphical user interface (GUI) for preparing various MACCS2 input parameters. MACCS2 is the central processing code for WinMACCS.

Input	Description
Fuel data	This information includes reactor (SFP, and cask) fuel data with power levels, burnups, and enrichment information to generate radionuclide inventory (i.e., Curies [Becquerel]) of the fuel inside the reactor core (or SFP or DCS). Core radionuclide inventory (in terms of mass) is an input to the MELCOR code and it is used in the analysis of radionuclide release and transport performed for the Level 2 PRA accident progression and source term quantification.
Core inventory data	From previous step.
Accident progression data	This information includes time dependent release fractions for risk-dominant radionuclide groups, as well as other information such as plume density, flow rate, release energy, and release height. This information is available from Level 2 PRA.
Multi-source release information	The combinations of possible source terms to be considered in offsite consequence analysis
Release category frequencies	Release category or source term frequencies are needed for determination of severe accident risks. This information is available from Level 1/2 PRA.
Accident progression and release characterization information	Uncertainties in the processes specifically related to radionuclide source term characterization and associated frequencies.

12.3.1.3 Analysis Steps

This subtask consists of four steps:

1. Development of inventory data
2. Implementation of source term data
3. Development and binning of releases
4. Identification of source of model and parameter uncertainty

Step 1 – Development of Inventory Data

The objective of this step is to determine the radionuclide inventory in the reactor core (SFP or DCS). This information is used along with the estimates of the release fractions that are provided from Level 2 PRA to determine the radionuclide-specific quantities that are released to the environment. The reactor core radionuclide inventory is determined based on the fuel enrichment and the expected burnup (power history) using a computer codes such as ORIGEN2 [2]/SCALE [3], which includes ORIGEN as one of its modules, for isotope generation and depletion during the reactor operating cycle.

Step 2 – Implementation of Source Term Data

The objective of this step is to prepare and implement the accident sequence/release category release characteristics, which include:

- The chemical group characteristics (i.e. grouping of radionuclides)
- The release magnitudes and profiles (i.e., the release fractions)
- The plume segment characteristics
- Radionuclide decay characteristics (i.e. pseudostable radionuclides)
- The start time and duration of release
- The energy of release
- The height/location of release relative to the ground level
- The size associated with the released aerosols
- The frequency of release

Much of this information is available from the outputs of the Level 2 PRA.

Step 3 – Development and Binning of Releases

The number of unique severe accident sequences represented in a Level 2 PRA can be exceedingly large. Comprehensive, probabilistic consideration of the numerous uncertainties in severe accident progression can easily expand a single accident sequence (or plant damage state) from the Level 1 PRA into a large number of alternative severe accident progressions. A radiological source term must be estimated for each of these Level 2 PRA accident progression end-states. Clearly, it is impractical to perform that many deterministic source term calculations. The objective of this step is to group/bin a finite number (as small as is practical while retaining the major consequence-distinguishing characteristics) of accident progression end-states (i.e., release categories or release bins which are the final results of the accident progression event trees) based on their common accident progression characteristics and their likely effects on emergency preparedness and consequence. This binning is expected to occur as part of the Level 2 analysis. After the source terms have been binned, representative source terms will be identified to represent the bins in offsite consequence calculations based on relative release frequency, release characteristics, and potentially other factors.

DRAFT

Step 4 – Identification of Source of Model and Parameter Uncertainty

The uncertainties related to the transition from the radionuclide release to Level 3 will be identified. The uncertainties in the source term will be evaluated as part of the Level 2 portion of the study. However, the level that these source term uncertainties can and will be considered in the offsite consequence calculations will be determined as part of this analysis step.

12.3.1.4 Documentation

The process for radionuclide inventory calculation including assumptions and inputs should be documented. The documentation also includes the radiological releases (source terms) resulting from various severe accidents as analyzed in the Level 2 PRA, and their associated characteristics. Table 12-43 provides the details of documentation needs. The documentation (along with the identified inputs described in Section 12.3.1.2) should be succinct and transparent to enable an independent QA and peer review.

Table 12-43 Documentation Needs for Subtask 1-3.1

Products	Description
Radionuclide inventory data	Document the radionuclide inventory data with sufficient supporting documents including information on the assumptions on power operating cycle and core equilibrium burnup. Core inventory will become part of the input to the MACCS2 model.
Release category attributes and release (source term) characteristics	Document the basis for attributes used to define the various release (source term) categories/bins and the associated characteristics of the selected representative source term for the category (e.g., quantity in the form of time dependent release fractions, time of release initiation, form of release, release height, release energy, etc.). This information will become part of the input to the MACCS2 model.
Sources of model and parameter uncertainty for source term development	The documentation of the transition of radionuclide release to Level 3 will be documented. Any offsite consequence analyses of the source term uncertainties as determined by the Level 2 analyses will also be documented.

12.3.1.5 Task Interfaces

The following lists the interfaces between this subtask and the other elements of the PRA:

- Steps 2 and 3 require completion of the Level 2 accident progression analyses, and the resultant source term quantities and attributes. This information could include the multi-source release information for the multi-unit considerations.

12.3.2 Subtask 1-3.2: Protective Action Parameters and Other Site Data

This subtask discusses parameters that affect the modeling aspects of the offsite protective actions in response to a severe accident. Protective actions include emergency response during the accident as well as longer-term actions to protect the public from contaminated land and food. Previous studies have shown that protective actions can have a significant effect on both the dose received by individuals and costs associated with radiological impacts, such as from remediation of contaminated land. In order to properly model protective actions, it is also important to evaluate the population distribution surrounding a site, offsite property values, and other site-specific considerations. Therefore, this subtask considers (1) the modeling of emergency response, (2) the modeling of long-term protective actions, and (3) the site-specific parameters. Furthermore, the sources of model and parameter uncertainty are identified for quantification for each one of aforementioned steps.

12.3.2.1 Assumptions and Limitations

The following are a list of assumptions and limitations that define the scope and the level of details of analyses that are performed:

- Emergency response planning and protective actions will include evacuation, sheltering, normal and hotspot relocation, land interdiction, and ingestion of potassium iodide (KI) pills, as appropriate. How to best model food/water interdiction in the analysis will be evaluated by the project team. The accidents are typically evaluated in accident phases. Whether the analysis will have an intermediate phase will also be evaluated by the project team.

- Dose criteria for food/land interdiction and relocation will be based on EPA and FDA guidance.

- The public will behave in an orderly fashion during and after the accident, and can be represented by cohorts. How to best consider those that fail to evacuate in the evacuation model and the consequence results will be evaluated by the project team.

- Evacuation modeling will consider staged evacuations as determined by the actual decision process, and will use the Vogtle-specific evacuation time estimate (ETE).

- A shadow evacuation for those that are not directed to evacuate, but are likely to evacuate anyways, will be evaluated.

- Site-specific population data will be based on the available data from the latest version of SECPOP, and extrapolated forward to a target year, as appropriate.

- The dose criterion for decontamination after a severe accident is uncertain. No long-term land cleanup goal or level currently exists. The current state of practice is to model decontamination to the level of meeting the habitability (return) criterion applicable at the particular site. How best to consider decontamination will be decided by the project team. Land use data (land/water fraction, fraction of land devoted to farming, etc.) and land value data will be based on current information from the Bureau of Economic Analysis. This data is available for Vogtle site (i.e., from the recent combined license application for Vogtle 3 and 4 power plants under construction at the same site).

12.3.2.2 Inputs

The information required to perform the associated steps are identified in Table 12-44. This information should be succinct and transparent to enable an independent QA and peer review.

Table 12-44 Needed Inputs for Subtask 1-3.2

Inputs	Description
Emergency planning	Site-specific emergency planning documentation providing information on evacuation time estimate, emergency planning zone, emergency response phases, sheltering and normal activities from exposure to contaminated ground and cloud, ingestion of potassium iodide; criteria for hot-spot relocation; evacuation strategies and cohorts; etc.
Long-term protective actions	These include characteristics of interdiction, decontamination, and condemnation, such as dose criteria for land/food, decontamination factors, start and length of decontamination, etc.
Site Demographic data	Population distribution around the site
Land use and economic data	Land/water fraction and land use (i.e., farmland). Land value data based on information from bureau of economic analysis.
Source of uncertainty	Uncertainties on ETE, evacuation strategy, land use, and economic data parameters as well as the uncertainties in emergency response modeling (i.e., delay and evacuation timing).

12.3.2.3 Analysis Steps

This subtask consists of four steps:

1. Emergency response modeling
2. Long-term protective action modeling
3. Site-specific parameters
4. Identification of source of model and parameter uncertainty

Step 1 – Emergency Response Modeling

Each nuclear power plant site is required to have in place, plans for emergencies to protect the public health and safety following potential accidents. The objective of emergency response modeling is to implement more realistic treatment of the site-specific emergency response plans. Emergency plans initiate response activities in accordance with the classification scheme based on emergency action levels. Preplanned actions are implemented at each classification level, including unusual events, alerts, site area emergencies, and general emergencies. Each site is required to have in-place an emergency plan implementation procedure that clearly identifies the timing of various action levels. These include an evacuation plan with detailed evacuation time estimates. The parameters that are modeled in MACCS2

include evacuation strategy and the number of cohorts. A cohort is a population group that mobilizes or moves differently from other population groups. Evacuation order usually refers to individuals that reside within the emergency planning zone (about 10-mile radius of the site, depending on the site emergency plan procedure). A number of cohorts could be established to represent the members of the public who may evacuate early, evacuate late, or may refuse to evacuate, and those that evacuate from areas that are not under evacuation order (called a "shadow evacuation" cohort). How to best consider those that fail to evacuate in the evacuation model and the consequence results will be evaluated. Accident scenario attributes from Level 1/2 PRA identify the various time parameters that affect the implementation of various evacuation strategies. Site evacuation routes are well defined in the Vogtle ETE report. The effective evacuation speed is based on the values determined in the site-specific evacuation time estimate report. Another factor considered is the time delay between the initiation of site emergency and the start of the evacuation or sheltering. Finally, hotspot and normal relocation, and KI ingestion will also be evaluated as part of emergency response. The specific details of the EP model for each modeling case may vary depending upon the nature of the accident being modeled. The details for each case will be developed in close coordination with experienced EP staff.

Step 2 – Long-term Protective Action Modeling

The objective of this step is to identify the long-term protective action parameters for input into the emergency plan. Long term protective actions include food/water and land interdiction, decontamination, condemnation. How to best model food/water interdiction in the analysis will be evaluated. Also, whether the analysis will have an intermediate phase will also be evaluated. Dose limit/criteria for land interdiction and relocation will be based on the EPA protective action guideline (EPA 400-R-92-001 [4]).

One issue that will be evaluated is how best to model long-term decontamination. The current state of practice is to consider decontamination only if it will eventually allow for the return of land to habitability, and if it is economic to do so. However, a long-term cleanup policy for severe accidents does not currently exist, and such guidance is currently being established. Such guidance could likely allow for the cleanup goals to be developed locally after an accident, to account for a number of factors that include sociopolitical, technical, and economic considerations. Given that such a policy for long-term cleanup does not currently exist (and because a developed policy may not contain explicit cleanup goals), the project may use dose levels associated with habitability as the point in deciding when land is to be decontaminated, and will evaluate whether further decontamination could be expected. Using the dose level for habitability is consistent with previous studies.

The objective of decontamination is to reduce projected doses in a cost-effective manner. If the maximum decontamination level is insufficient to restore an area to immediate habitability, a period of temporary interdiction following the maximum decontamination level is considered in order to allow for dose reduction through radioactive decay and weathering. Currently, in MACCS2, if a property cannot be made habitable within 30 years or if the cost of reclaiming the habitability of a property exceeds the cost of condemnation, the property is considered to be condemned and permanently withdrawn from use.

Step 3 – Site-Specific Parameters

The objectives of this step are to prepare site-specific data on demography, land use, and economic data. The site specific-meteorological data is discussed in Subtask 1-3.3 below. The information required for each category is summarized below.

Demography: Population distribution around the plant on a polar grid (MACCS2 accepts 16, 32, 48 and 64 angular sectors) and user-specified annular radial sectors, usually a finer grid close to the plant and one that becomes progressively coarser at greater distances. The population information can be generated by the SECPOP code (NUREG/CR-6525, Rev 1 [6]), and this can be extrapolated forward to a target year as necessary. The latest version of SECPOP at this time is SECPOP2000, although the next version is expected soon and may be available.

Land use: Fraction of the area in each spatial segment that is land, and fraction of land which is agricultural for major crops and their corresponding growing season. This information is available for the Vogtle site. The SECPOP2000 code also generates this data, but using the 1997 county and state data. Alternatively, this information can be obtained from the U.S. Department of Agriculture, for the areas of interest.

Economic data: Regional economic data on value of farmland, value of nonfarm property, annual farm sales, fraction of land devoted to farming, and fraction of farm sales resulting from dairy production. This information is available for the Vogtle site. The SECPOP code also generates this data. Similar to the demographic information, the latest SECPOP code available can be used and extrapolated forward to a target year as necessary.

Step 4 – Identification of Source of Model and Parameter Uncertainty

The sources of uncertainties related to protective actions will be identified.

12.3.2.4 Documentation

The process used to develop the protective action parameters and the supporting engineering bases, including the assumptions, inputs, methods, and results are documented. The documentation also includes site-specific information on land use, economic data, and population distribution. Table 12-45 provides the details of documentation requirements. The planned documentation (along with the identified inputs described in Section 12.3.2.2) should be succinct and transparent to enable an independent QA and peer review.

DRAFT

Table 12-45 Documentation Needs for Subtask 1-3.2

Products	Description
Emergency Response	Document sources of information and assumption used for selection of parameters to model the emergency response. In addition, identify sources of model and parameter uncertainty.
Long-term protective actions	Document sources of information and assumption used for selection of parameters (e.g., dose criteria for land/food, decontamination factors, start and length of decontamination, etc..) to model the long-term protective actions in MACCS2. In addition, identify sources of model and parameter uncertainties.
Site-specific MACCS2 site input file	Documents assumptions and data sources used to prepare MACCS2 site data file. In addition, identify source of model and parameter uncertainties.

12.3.2.5 Task Interfaces

The initiating event and accident progression from the Level 1 and 2 PRA will inform the models developed for emergency response. Also, the economic data prepared as part of the site-specific parameters has a common interface with the Subtask 12.3.7, "Economic Factors."

12.3.3 Meteorological Data

The meteorological data are needed for a sufficient period of time (i.e., temporally representative) to enable determination of the frequency of occurrence of local conditions that affect atmospheric transport and dispersion. At least one year of hourly data on wind speed, wind direction, atmospheric stability class, precipitation rate, and height of the atmospheric inversion layer is required. The objective of this subtask is to ensure that appropriate and valid meteorological data are compiled for use as input to the consequence analysis model. This subtask consists of two steps: review of site meteorological data, and development of meteorological data input file for MACCS2 use.

12.3.3.1 Assumptions and Limitations

The following are a list of assumptions and limitations that define the scope and level of details of analyses that are performed:

- Southern Nuclear will provide multiple years of weather data to NRC. The weather data chosen for the meteorological input file for MACCS2 will be based on data recovery (greater than 99 percent being desirable) and proximity to the target year for the project. Hourly data for a set period of time will be used for the site (8,760 data points for each year). This period of time that the weather data represents will be determined by the project team.

- Meteorological data will include: temperature at two elevations, wind speed, wind direction, and precipitation.

- Missing data will be bridged over using hourly records before and after by employing, "Procedures for Substituting Values for Missing National Weather Service Meteorological Data for Use in Regulatory Air Quality Models," dated July 7, 1992 [7], consistent with the method used in the State-of-the-Art Reactor Consequence Analysis (SOARCA) [8].

- Quality assurance will be performed using the methodology described in NUREG-0917, "Nuclear Regulatory Commission Staff Computer Programs for Use with Meteorological Data," dated July 1982 [9], consistent with SOARCA.

- Atmospheric stability categories will be classified using vertical temperature difference, consistent with SOARCA.

- Weather data available from the Savannah River Site may be considered, for substitution of missing data, where appropriate.

12.3.3.2 Inputs

The design, maintenance, and operational information required to perform the associated steps are identified in Table 12-46. This information should be succinct and transparent to enable an independent QA and peer review.

Table 12-46 Needed Inputs for Subtask 1-3.3

Input	Description
Meteorological data for multiple years from Southern Nuclear	This information includes hourly data on wind speed, wind direction, atmospheric stability class, precipitation rate, and height of the atmospheric inversion layer.

12.3.3.3 Analysis Steps

The objective of this subtask is to ensure that appropriate and valid meteorological data are compiled for use as input to the consequence analysis model. There are three interrelated steps:

1. Review of the meteorological data
2. Development of the metrological data input file for MACCS2 use
3. Identification of source of model and parameter uncertainty

Step 1 – Review of the meteorological data

Meteorological data is a very important part of the consequence analysis. Therefore, a key objective is to ensure that a valid and representative set of meteorological data are used as input to atmospheric transport and dispersion (ATD) code that provides the basis for consequence analysis calculations. As part of the review, one needs to confirm that the selected meteorological data represents local /site weather data, has a continuous and complete hourly data for at least one year, and if any data are missing appropriate data recovery and substitution data have been applied. In addition, the data collection were based on a system of calibrations, maintenance activities, and instrument exposure that meet or exceed the requirements of the ANSI/ANS-3.11-2010 Standard for "Determining Meteorological

Information at Nuclear Facilities," [10] or its equivalent. Table 1 of ANSI/ANS-3.11-2010 establishes accuracies for each parameter.

Step 2 – Development of the meteorological data input file for MACCS2 use

The objective of this subtask is to ensure that appropriate and valid meteorological data are compiled for use as input to the consequence analysis model.

In general, site-specific weather data are produced for multiple years. The attributes will include temperatures at two locations (to determine the atmospheric stability class), wind speed, wind direction, and precipitation. Hourly weather data for a set period of time will be used, and this period of time will be determined. Typically in offsite consequence calculations, this is a 1-year period. The chosen weather data for the MACCS2 use will be based on the data recovery (greater than 99 percent is desirable). Missing data will be bridged over using hourly records before and after by employing an industry standard procedure, "Procedures for Substituting Values for Missing National Weather Service Meteorological Data for Use in Regulatory Air Quality Models" [7].

Step-3 – Identification of source of model and parameter uncertainty

The sources of uncertainties related to the meteorological data will be identified.

12.3.3.4 Documentation

The review process to ensure that a valid and representative set of meteorological data are used as input for consequence analysis is documented. The documentation at a minimum identifies the followings:

- Source of data (including reasons for selection)
- Quality assessment
- Levels of sensors
- Exposure of tower
- Calibration records
- Period of record
- Percent data recovery
- Extent of conformance with ANSI/ANS-3.11-2010 and Regulatory Guide 1.23, Revision 1 [11]

Table 12-47 provides the details of documentation needs. The documentation (along with the identified inputs described in Section 12.3.3.2) should be succinct and transparent to enable an independent QA and peer review.

Table 12-47 Documentation Needs for Subtask 1-3.3

Product	Description
Meteorological data review	Document the review process including information on source of data and reason for their selection, quality of the data, calibration records, levels of sensors, percent data recovery, and extent of conformance with ANSI/ANS-3.11-2010 and Regulatory Guide 1.23,

Product	Description
	Revision 1. Also identify source of parameter uncertainties.
Vogtle-specific meteorological input file for MACCS2 user	Document actions taken and assumptions made regarding any adjustments to the weather data, including the method for substituting the missing information.

12.3.3.5 Task Interfaces

There is no interface between this subtask and other elements of the PRA. However, the product of this subtask serves as direct input to Subtask 1-3.4, "Atmospheric Transport and Dispersion."

12.3.4 Subtask 1-3.4: Atmospheric Transport and Dispersion

Simulation of the transport of airborne particles and gases in the ambient air requires the use of Atmospheric Transport and Deposition (ATD) models. The most commonly-used model used to characterize a "plume" of airborne material is referred to as the steady-state, straight-line, Gaussian model. MACCS2 uses a Gaussian plume segment model. This model calculates ground-level instantaneous and time-integrated airborne concentrations in the plume segment. The amount of particulate material deposited on the ground is calculated using a constant deposition velocity. Its results are a function of distance from the source, and precipitation rate.

12.3.4.1 Assumptions and Limitations

The following are a list of assumptions and limitations that define the scope and level of details of analyses that are performed:

- The offsite consequences will focus on atmospheric releases, which is the current state of practice for severe accidents.
- MACCS2's straight-line Gaussian plume segment model with provisions for meander and surface roughness will be used to model atmospheric transport and dispersion.
- Multi-phased releases that use hourly plume segments will account for temporal variations in meteorological conditions (such as wind direction) before a plume segment is released. After a plume segment is released, the plume segment does not change direction (i.e. straight-line), and therefore does not (or no longer) accounts for variations in wind direction, wind field, or topography.
- The ATD model will treat plume rise resulting from the sensible heat content (i.e., buoyancy), initial plume size caused by building wake effects, release of up to 200 plume segments, and dispersion under statistically representative meteorological conditions.
- Radionuclide concentrations will be modeled on a two-dimensional grid that includes population, land use, and other information in reasonably fine geographical areas to serve as input to the dose calculations.

- For each simulated release, a suitable statistical sampling technique will be used to select the hourly weather data to use.

- The period of weather data used will be determined by the meteorological data subtask. Past experience with the results of year-to-year weather variations indicates a consequence variance in health effect (cumulative dose) of about 20 percent, using one year of weather data versus another.

- Site-specific physical plant characteristics (e.g., building dimensions, stack heights) will be used to determine height of releases and building wake.

- Dry deposition velocities will be calculated depending on the physical characteristic of the radionuclides that are released. Multiple particle size groups will be modeled.

- Wet deposition velocities will be calculated considering various precipitation intensities.

- Resuspension of deposited radionuclides will be modeled.

12.3.4.2 Inputs

The information required to perform the associated steps are identified in Table 12-48. This information should be succinct and transparent to enable an independent QA and peer review.

Table 12-48 Needed Inputs for Subtask 1-3.4

Input	Description
Accident release data	This information includes the source term characteristics discussed in Subtask 12.3.1.
Site-specific data	This information includes site demographic, and calculation grids. The calculation grid is that used for determining population distributions and land use around the site.
Meteorological data	This information includes weather data and attributes discussed in Subtask 12.3.3.
Dry and wet deposition velocities	Characteristics of release in terms of particle size (for dry deposition) and precipitation rate (for wet deposition).

12.3.4.3 Analysis Steps

The consequence analysis is performed using WinMACCS/MACC2 code. The ATD model in MACCS2 code is a straight-line Gaussian plume segment model with provisions for meander and surface roughness. This assumption is generally valid for flat terrain to a distance of a many kilometers from the point of release; however, it is subject to much larger uncertainties both in the immediate vicinity of the point of release (e.g., near the reactor building) and at long distances. However, using ensemble average results of many weather trials significantly reduces the model uncertainty at long distances. For instance, comparisons of MACCS2 to ADAPT/LODI, a state-of-the-art, three-dimensional advection dispersion code (NUREG/CR-6853 [12]), show the MACCS2-calculated results (i.e., ring-averaged values) ranged from a minimum of 0.64 to a maximum of 1.58 times the corresponding LODI results (i.e., ring-averaged) with higher ratios occurring at 16 km (10 miles) ring, and lower ratios for the 80 and 160 km (50 and 100 mile) rings. Given that the differences in results are within a factor of 2, and

the fact that MACCS2 is a fast running code, using ensemble average results is considered to be acceptable for Level 3 PRA analyses, and MACCS-calculated estimates of off-site consequences are expected to be well within the expected uncertainties even at distances beyond the 160 kilometers measured in the above comparison.

The normal calculation mode for MACCS2 is to sample from hourly weather data for one year for ATD calculations. The selection of weather sequences for the ATD calculation is an input parameter. A simplest approach in weather sequence selection is to perform stratified random sampling of weather date considering all the hourly data. Contemporary computing techniques are now capable of running all hours separately. In this manner the very low probability "tails" of the distribution associated with the variation in the meteorological conditions can be determined for consideration in the analysis. Another approach is to create weather sequences based on a preset assumption on ranges of precipitation rates and perform bin sampling. This approach requires shorter computing time. The SOARCA project used the bin sampling approach.

Using accident release data (radionuclide fractions, energy content, timing, location of release, etc.) and random samples of hourly meteorological data, the ATD module calculates transport of radionuclides including dry deposition, wet deposition, and resuspension, resulting in distributions of radionuclide concentrations on a two-dimensional grid that includes population, land use, and other information in reasonably fine geographical areas within a certain distance of the site to serve as input to the dose calculations.

In addition to calculating the atmospheric transport of radionuclides, the uncertainties related to atmospheric transport and dispersion will also be identified.

12.3.4.4 Documentation

Table 12-49 provides the details of documentation needs. The documentation (along with the identified inputs described in Section 12.3.4.2) should be succinct and transparent to enable an independent QA and peer review.

DRAFT

Table 12-49 Documentation Needs for Subtask 1-3.4

Product	Description
Atmospheric transport and dispersion modeling	Document the specific assumptions, parameters, and the ATD model that were used in the consequence analysis. Include discussions on calculation grid, time scale, meteorological sampling method, plant/site characteristics (e.g., release height, building dimensions), and wet and dry deposition velocities. In addition, identify the sources of parameter and model uncertainty.

12.3.4.5 Task Interfaces

There is no interface between this subtask and other elements of the PRA. The product of this subtask serves as direct input to Subtask 1-3.5, "Dosimetry." It requires input from Subtask 1-3.1, "Transition from the Radionuclide Release to Level 3," and Subtask 1-3.3, "Meteorological Data."

12.3.5 Subtask 1-3.5: Dosimetry

Dosimetry involves computation of radiation doses received by individual receptors and population groups. Dose estimates are made for each accident using the spatial distribution of instantaneous and time-integrated airborne concentration, and deposited amounts of radioactive material calculated by the ATD model. Dosimetry computation is a main focus of the MACCS2 code. MACCS2 accounts for both short-term (from exposure to plume passage and shortly after, on the order of days) and long-term (from indirect uptake of radioactivity over an extended period, on order of years) effects.

The exposure pathways modeled in MACCS2 include internal and external pathways. Internal pathways consist of inhalation of radionuclides in the cloud and resuspended material deposited on the ground, and ingestion from deposited radionuclides that make their way into food and water. External pathways consist of direct exposure to radioactive material in the plume (i.e., cloudshine); and exposure to radioactive material deposited on the ground (i.e., groundshine).

12.3.5.1 Assumptions and Limitations

The following are a list of assumptions and limitations that define the scope and level of details of analyses that are performed:

- MACCS2 code will be used (i.e., MACCS2 assumptions and limitations apply).
- The team will use the dose conversion factors available in the most recent update released for Federal Guidance Report (FGR). An update to FGR-13 [13] may be available for the project, but it is not currently.
- The shielding factors will be determined (if not available for the Vogtle site) based on the general conditions of structures in the area using a method similar to that used in NUREG/CR-4551, Vol. 2-Rev,1 Part 7 [5].

12.3.5.2 Inputs

The information required to perform the associated steps are identified in Table 12-50. This information is succinct and transparent in enabling an independent QA and peer review.

Table 12-50 Needed Inputs for Subtask 1-3.5

Input	Description
Dose conversion factor (DCF)	Dose conversion factors are typically chosen from the recent Federal Guidance Reports. The latest DCFs are in FGR 13.
Radiation protection factors	While DCFs will calculate doses for health effects, separate parameters such as weighting factors will calculate doses for radiation protection.
Dose exposure pathway factors	Breathing rates, attenuation factors, the resuspension factors are examples of information needed to determine the level of exposure to the public.
MACCS2 ATD output	This information is internal to the MACCS2 code, and transfers automatically in the dosimetry computation.
Protective action parameters	This information is discussed in Subtask 1-3.2.

12.3.5.3 Analysis Steps

As stated above, the MACCS2 code will be used for dosimetry computations. The above inputs will be developed, as necessary. The code can consider all the relevant pathways, and how best to model the food/water pathway will be evaluated. The input requirements for this subtask are listed Section 12.3.5.2. Also, the sources of uncertainties related to dosimetry will be identified.

12.3.5.4 Documentation

Table 12-51 provides the details of documentation needs. The documentation (along with the identified inputs described in Section 12.3.5.2) should be succinct and transparent to enable an independent QA and peer review.

DRAFT

Table 12-51 Documentation Needs for Subtask 12.3.5

Product	Description
Dosimetry	Document the specific assumptions and parameters, used. This includes: • Identification of exposure pathways considered and justification for any pathways excluded • Selection of DCFs and attenuation factors (e.g., shielding) • Identification of source of parameter and model uncertainty

12.3.5.5 Task Interfaces

There is no interface between this subtask and other elements of the PRA. The products of this subtask serve as direct input to Subtask 1-3.6, "Health Effects." It requires inputs on protective action parameters from Subtask 1-3.2 "Protective Action Parameters and Other Site data" and from Subtask 12.3.4 "Atmospheric Transport and Dispersion."

12.3.6 Subtask 1-3.6: Health Effects

The health effects from exposure to ionizing radiation are divided into two categories of early (i.e., prompt) and latent. The early health effects are caused by doses that exceed certain thresholds. They include both mortality and morbidity (i.e., fatalities and injuries) and usually occur within a short period of time (few days to weeks). The latent health effects may occur several years after exposure. MACCS2 considers both types of health effects and has had an established computational methodology consistent with standards and guidance by various international committees on radiation protection.

12.3.6.1 Assumptions and Limitations

The following are a list of assumptions and limitations that define the scope and level of details of analyses that are performed:

- The availability of health effects models is limited to the capabilities incorporated into the MACCS2 code.
- The assessment of health effects will include individual latent cancer fatality risk as well as individual early/prompt fatality risk.
- The effect of low doses on health is uncertain. A linear, no threshold (LNT) dose response model will be used and other dose response models will be considered if time and resources permit.
- The latest available risk factors will be used. Currently FGR-13 uses risk factors from BEIR V, although guidance for using risk factors from BEIR VII may become available soon.

12.3.6.2 Inputs

The information required to perform the associated steps are identified in Table 12-52. This information should be succinct and transparent to enable an independent QA and peer review.

Table 12-52 Needed Inputs for Subtask 1-3.6

Input	Description
MACCS2 input for early fatality calculations	List of target organs along with factors representing organ specific lethal dose (an organ dose that could lead to early fatality in 50 percent of exposed individuals, dose corresponding to 50 percent probability), dose response exponent, and dose threshold.
MACCS2 input for early injury calculations	Similar list of information as that for early fatality calculations, but related to early injuries.
MACCS2 input for later cancer fatality	Since latent cancer fatalities are associated with specific organs, information is needed for the lifetime risk factor for cancer injury and death.

12.3.6.3 Analysis Steps

As stated earlier, the MACCS2 code will be used (i.e., the health effect models in MACCS2 are the basis for the analyses). The required inputs for determination of early fatalities/injuries and latent cancer fatalities may need to be developed and are listed in Section 12.6.3. The use of dose response models will need to be justified and the sources of uncertainties related to health effects will be identified.

12.3.6.4 Documentation

Table 12-53 provides the details of documentation. The documentation (along with the identified inputs described in Section 12.3.6.2) are succinct and transparent in enabling an independent QA and peer review.

Table 12-53 Documentation Needs for Subtask 1-3.6

Product	Description
Health effect model, and input data (MACCS2)	Document the specific assumptions and parameters used. This includes a discussion of the model if it is different from that in MACCS2, and identification of sources of data for the required input. Also identify the sources of parameter and modeling uncertainty.

12.3.6.5 Task Interfaces

There is no interface between this subtask and other elements of the PRA. The product of this subtask serves as direct input to Subtask 1-3.8, “Quantification and Reporting.” It requires inputs from Subtasks 1-3.1 through 1-3.5.

12.3.7 Subtask 1-3.7: Economic Factors

The economic factors may include the costs of various actions (i.e., evacuation, relocation, and decontamination) taken to protect the public from short-term and long-term exposure via different exposure pathways; the costs of health effects following exposure; and the secondary

economic effects. The economic model in MACCS2 includes costs associated with various actions or modeling within six categories as follows:

- Evacuation and relocation costs (e.g., a per diem cost associated with displaced individuals). The per-diem costs are associated with the population that is temporarily relocated. These costs are calculated by adding up the number of displaced people times the number of days they are displaced from their homes.

- Moving expenses for people displaced (i.e., a onetime expense for moving people out of a contaminated region). There is a one-time moving expense for the population displaced from their homes because of decontamination, interdiction, or condemnation. The modeling can include loss of wages.

- Decontamination costs (e.g., labor, materials, equipment, and disposal of contaminants). These are the costs associated with decontaminating property. These costs include labor and materials for performing the decontamination. They depend on the population and size of the area that needs to be decontaminated as well as the level of decontamination that needs to be performed. They can include the cost to dispose of contaminated material. The model estimates the costs only if decontamination is cost effective.

- Cost due to loss of land use of property (e.g., costs associated with lost return on investment and for depreciation of property that is not being maintained). These costs are associated with loss of use of property. These costs include an expected rate of return on property and depreciation caused by lack of routine maintenance during the period of interdiction, the time when the property cannot be used.

- Disposal of contaminated food grown locally (e.g., crops, vegetables, milk, dairy products, and meat).

- Cost of condemned lands (i.e., land that cannot be restored to usefulness or is not cost effect to do so). These are costs of condemning property that cannot be restored to meet the habitability criterion.

12.3.7.1 Assumptions and Limitations

The following are a list of assumptions and limitations that define the scope and level of details of analyses that are performed:

- The economic consequences considered are limited to those calculated in the MACCS2 code. (Economic consequences of health care related costs are not included currently in the MACCS2 code.)

- Decontamination will be modeled as determined by the subtask on protective actions.

12.3.7.2 Inputs

The information required to perform the associated steps are identified in Table 12-54. This information should be succinct and transparent to enable an independent QA and peer review.

Table 12-54 Needed Inputs for Subtask 1-3.7

Input	Description
Economic data and factors	Regional economic data on value of farmland, value of nonfarm property, annual farm sales, fraction of land devoted to farming, and fraction of farm sales resulting from dairy production. (This is an input to Subtask 1-3.2.) Cost of living for the evacuated and relocated people during short- or long-term, unit costs for land decontamination, loss of usage of the property, relocation of people, habitability restoration for nonfarm properties, and milk and crop disposal.

12.3.7.3 Analysis Steps

The objectives of this subtask are to (1) identify the cost parameters for use by MACCS2; (2) list the sources of data for cost parameters for land decontamination, evacuation, relocation, land, depreciation, and loss of use; (3) identify which cost parameters are important that require site-specific data versus those that can use generic data; (4) provide justification for excluding any cost data; and (5) identify the sources of uncertainty related to economic costs.

The required list of cost factors is giving in Section 12.3.7.2. The main cost factor that is heavily dependent on the degree of contamination is land decontamination.

12.3.7.4 Documentation

The processes used to develop the economic factors and the supporting engineering bases, including the assumption, inputs, methods, and results are documented. Table 12-55 provides the details of the documentation. The documentation (along with the identified inputs described in Section 12.3.7.2) should be succinct and transparent to enable an independent QA and peer review.

Table 12-55 Documentation Needs for Subtask 1-3.7

Product	Description
Economic factors, and input to MACCS2 code	Document the specific assumptions, inputs, sources of data, and methods used to determine the required economic factors. These include definitions of economic factors, generic/site-specific data sources used, and any adjustments to time sensitive factors made. In addition, identify sources of parameter and model uncertainties.

12.3.7.5 Task Interfaces

There is no interface between this subtask and other elements of the PRA. The products of this subtask serve as direct inputs to Subtask 1-3.8, “Quantification and Reporting.”

12.3.8 Subtask 1-3.8: Quantification and Reporting

The quantification is performed using the information collected and developed in the previous subtasks using the MACCS2 code. The objectives of this task are to generate results in the form of the consequence metrics of interest, and to identify significant contributors to the calculated consequence measures/metrics. The consequence metrics of most interest to a Level 3 PRA focus on the impact to human health and economic costs. Some potential consequence metrics of interest include:

- Total early fatality risk
- Total latent cancer fatality risk
- Individual early fatality risk defined in the early fatality Qualitative Health Objective (QHO), i.e., the risk of early fatality for the average individual within 1 mile from the plant
- Individual latent cancer fatality risk defined in the latent cancer QHO (i.e., the risk of latent cancer fatality for the average individual within 10 miles of the plant)
- Population dose (person-sievert) out to various distances from the plant
- Individual early injury risk
- Individual cancer incident risk
- Land contamination (e.g., contaminated area that exceeds particular contamination levels)
- Off-site economic costs

12.3.8.1 Assumptions and Limitations

The following is a list of assumptions and limitations that define the scope and level of details of analyses that are performed:

- The reported results will include consequence metrics as a function of distance. The distance (from the point of release) to which results should be reported will be evaluated by the project team.

- The effect of low dose radiation (low doses and/or low dose rates) on latent cancer fatalities is uncertain. The range of health effects reported will depend on the dose response model(s) considered in the health effects subtask.

- Potential uncertainties will create a range of results. How best to report potential uncertainties will be evaluated by the project team.

- The reported consequence metrics will be determined by the project team.

12.3.8.2 Inputs

The inputs to this subtask are the products from Subtasks 1-3.1 through 1-3.7.

12.3.8.3 Analysis Steps

As stated above, the objectives of this task are to generate results in terms of the consequence metrics of interest, and to identify significant contributors to calculated consequence measures/metrics. This step in the quantification of a Level 3 PRA is the integration of results to compute individual measures of risk. The severe accident progression and the radionuclide source term analyses conducted in the Level 2 portion of the PRA, as well as the consequence analyses in the Level 3 portion of the PRA, are performed on a conditional basis. That is, the

evaluations of severe accident progression, the resulting source terms, and accident consequences are carried-out without regard to the absolute or relative frequencies of the postulated accidents. The final computation of risk is the process by which each of these elements of the analyses are integrated into a self-consistent and statistically rigorous manner. The point-estimate (or mean) risk is a product of the mean accident frequency and its associated consequence, on a plant damage state, release category, and accident consequence basis.

Mathematically, risk is defined as the following triplet:

$$R_c = \sum_i \sum_d \sum_s [f_i \cdot P(i|d)] \cdot P(d|s) \cdot \overline{C}(s|c) \qquad (12.3\text{-}1)$$

where R_c is the risk per year of consequence measure c; f_i is the frequency of initiating event *"i"* (per year); *P(i|d)* is the conditional probability that initiating event *"i"* will lead to plant damage state *"d"*; *P(d|s)* is the conditional probability that plant damage state *"d"* will lead to source term (release) *"s"*; and *C(s|c)* is the expected value of the conditional consequence measure *"c",* given the occurrence of source term (release) *"s."*

The health effects caused by radiation exposure are subject to considerable uncertainties and the models used to relate dose and response should reflect and, to the extent possible, quantify these uncertainties. At the subtask level, sources of parameter and model uncertainties are identified. These uncertainties may be propagated by combining uncertainties in release category frequencies, the release (source term) quantities, dosimetry, health effects models, etc. by standard sampling method. This project will also use the insights gained from the uncertainty analysis performed in the SOARCA project [8, 14 and 15].

Because the results of this subtask are the MACCS2-calculated outputs, the output files are reviewed for any errors, warnings, and/or unexpected results (e.g., explain any Monte Carlo realizations that failed to execute fully), to confirm appropriate modeling and code execution. The significant contributors to the consequence/risk metrics of interests will be identified and reported.

The reported consequence metrics will be evaluated by the project team, and will attempt to maximize openness, meaningfulness, and risk communication. Economic consequences of health-related costs (as well as other costs) in addition to those calculated by MACCS2 code may also be considered.

Finally, the merits of distance truncation on the results (from the point of release) will also be evaluated, as well as how best to report potential uncertainties.

12.3.8.4 Documentation

Table 12-56 provides the details of documentation needs. The documentation (along with the identified inputs described in Section 12.3.8.2) should be succinct and transparent to enable an independent QA and peer review.

Table 12-56 Documentation Needs for Subtask 1-3.8

Product	Description

Product	Description
Quantification and Reporting	Document the consequence quantification process including any applicable sensitivity and uncertainty analyses. Identify significant contributors to the calculated consequences and risk metrics of interest listed in Section 12.3.8, and report the consequence metrics of interest.

12.3.8.5 Task Interfaces

This subtask interfaces with Level 2 PRA, requiring release categories frequencies for determining the desired risk metrics.

12.3.9 Subtask 1-3.9: Risk Integration

This element of the on-going draft Level 3 PRA standard overlaps substantially with the Site Level 3 Project's separate "Quantification of the Site Risk, Integration of the PRA" task, documented in Section 17, "Technical Approach for Integrated Site PRA." This element is currently TBD.

12.3.10 Interfaces for Overall Task 1-3

In addition to the task interfaces identified for the individual subtasks in the previous sections, there are also some general interfaces for all of Task 1-3. These interfaces include Identification and preparation of input data for the release categories for all accident events, all hazards, and all sources, as detailed below.

- Internal events at power: Include frequencies, source terms, and plume characterizations from fifteen or more MELCOR calculations. Work with the Level 2 team to ensure completeness.

- External hazards: Include frequencies, source terms, and plume characterizations from five or more MELCOR calculations, Work with the Level 2 team to ensure completeness.

- Low Power and Shutdown: Include frequencies, source terms, and plume characterizations from five or more MELCOR calculations. Consider source terms with lower decay heat. Consider Zr oxidation in air for mid-loop release categories. Work with the Level 2 team to ensure completeness.

- Spent Fuel Pools and dry casks: Include frequencies, source terms, and plume characterizations from five or more MELCOR calculations. Work with the Level 2 team to ensure completeness.

12.3.11 References

1. K. McFadden et al., "WinMACCS, a MACCS2 Interface for Calculating Health and Economic Consequences from Accidental Release of Radioactive Materials into the Atmosphere User's Guide and Reference Manual WinMACCS Version 3," NUREG/CR-XXXX, SAND2005-XXXX, July 2007.
2. ORIGEN2.

3. SCALE 6.1.
4. “Manual of Protective Action Guides and Protective Actions for Nuclear Incidents,” U.S. Environmental Protection Agency, EPA-400-R-92-001, May 1992.
5. J.I. Sprung et al., “Evaluation of Severe accident Risks: Quantification of Major Input Parameters, MACCS Input,” NUREG/CR-4551 Vol. 2, Re. 1 Part 7, December 1990.
6. N.E. Bixler et al., “SECPOP2000: Sector Population, Land Fraction, and Economic Estimation Program,” NUREG/CR-6525, Rev. 1, August 2003.
7. “Procedures for Substituting Values for Missing National Weather Service Meteorological Data for Use in Regulatory Air Quality Models,” dated July 7, 1992.
8. “State-of-the-Art Reactor Consequence Analysis (SOARCA) Report,” NUREG-1935 (Draft for Comment) January 2012.
9. “Nuclear Regulatory Commission Staff Computer Programs for Use with Meteorological Data,” July 1982.
10. ANSI/ANS-3.11-2010 Standard for “Determining Meteorological Information at Nuclear Facilities.”
11. Regulatory Guide 1.23, Revision 1, “Meteorological Monitoring Programs for Nuclear Power Plants,” March 2007.
12. C.R. Molenkamp et al., “Comparison of Average Transport and Dispersion Among a Gaussian, a Two-Dimensional, and a Three-Dimensional Model,” NUREG/CR-6853, October 2004.
13. Federal Guidance Report No. 13, “Cancer Risk Coefficients for Environmental Exposure to Radionuclides,” EPA 402-R-99-001, September 1999.
14. N. Bixler et al., “Synthesis of Distributions Representing Important Non-Site-Specific Parameters in Off-Site Consequence Analysis,” Sandia National Laboratories, Albuquerque, NM, DRAFT NUREG/CR, publication expected by November 2012.
15. Draft NUREG/CR on MACCS2 SOARCA Best Practices, once completed (expected late 2012).
16. D. Chanin et al., “Code Manual for MACCS2: User’s Guide,” NUREG/CR-6613, Vol. I, May 1998.
17. H-N Jow et al., “MELCOR Accident Consequence Code System (MACCS): Model Description,” NUREG/CR-4691, Vol. II, February 1990.

DRAFT

13. Technical Approach for Reactor, At-Power for External and Other Hazards PRA

13.1 Task 2-1: Level 1 Reactor PRA, At-Power for External and Other Hazards

13.1.1 Subtask 2-1.2: Level 1 Reactor PRA for At-Power and Seismic Events

The seismic PRA models seismic event scenarios for power operation and quantifies their contribution to core damage frequency (Level 1 analysis). The ASME/ANS PRA Standard Section 5-2 [1] describes the technical requirements for Level 1 reactor at-power seismic events PRA (SPRA). According to this standard, the major technical elements of a SPRA are:

- Probabilistic seismic hazard analysis (PSHA) – The objective of the PSHA is to estimate the probability or frequency of exceeding different levels of vibratory ground motion. A new PSHA will be performed, to define the seismic bins which are modeled in the PRA.

- Seismic fragility evaluation – In this element, site-specific and plant-specific seismic fragilities for SSCs that are modeled in the SPRA will be used to calculate basic event failure probabilities for seismic bins associated with these SSCs.

- Seismic plant response analysis – In this element, for each seismic bin, event tree (ET) and fault tree (FT) models will be developed and placed into the plant SPAR model. Existing ET and FT models from the Level 1 internal events SPAR model will be used, where applicable. The CDF from seismic events will be quantified and significant CDF cutsets will be identified.

13.1.1.1 Assumptions and Limitations

The following are a list of assumptions and limitations that define the scope and level of detail performed for this task:

- SNC has initiated their plant-specific SPRA study; however, the study it is not expected to be completed for use in this project. There is a good likelihood that some or all seismic fragilities become available and can be used in this project. In the meantime, a representative or generic set of seismic fragilities will be used for revising the Vogtle internal events SPAR model.

- The quantitative analysis and modeling is for Level 1 PRA of the seismic events for one unit.

- The site-specific seismic hazard curves developed in the Early Site Permit study for Vogtle Units 3 and 4 could be used as a starting point for this project. However, SNC is currently developing new site-specific hazard curves for Unit 1 in response to the NRC letter 50.54(f), which are expected to be available in mid 2013. These updated curves should be used in the final Level 3 PRA Project.

- It is assumed that documentation for plant systems are available to the NRC for use in the full scope site Level 3 PRA Project.

- The CDF sequences and their end-states will be defined in the same manner as those in the internal event CDF sequences so that the interface from Level 1 to Level 2 can be set up as part of the internal events SPAR model for use by the Level 2 task, if needed.

13.1.1.2 Inputs

The design, maintenance and operational information required in order to perform the associated steps 1, 2 and 3 are identified. The information needed to perform each step, at a minimum, is listed in Table 13-1.

Table 13-1 Required Inputs for Subtask 2-1.1

Input	Description(1)
Design/Engineering	• Site characteristization input for PSHA - Site geotechnical information • Design input for fragility analysis - SSC design and qualification criteria - Spatial layout, sizing, and accessibility information related to the credited SSCs. - Design and qualification analysis/test reports - Anchorage details for equipment - SSC structural response analysis results • Plant response analysis - Success criteria for SSCs - Level 1 Internal events SPAR model
Operation	• Plant response analysis - That information needed to reflect the actual operating procedures and practices used at the plant including when and how operators interface with plant equipment as well as how plant staff monitor equipment operation and status after an earthquake
Maintenance	None
Note (1) – much of the above information can be gathered and is confirmed via plant walkdown and personnel interviews.	

13.1.1.3 Analysis Steps

Seismic analysis consists of three interrelated steps:

1. Probabilistic seismic hazard analysis
2. Seismic fragility evaluation
3. Seismic plant response analysis

These steps are described below; however, for more detailed guidance, refer to ASME/ANS RA-Sa-2009 PRA Standard.

Step 1 – Probabilistic Seismic Hazard Analysis

The objectives of PSHA are to generate two inputs to the SPRA, namely; a family of seismic hazard curves, and one or more ground motion response spectra. The hazard curves are used

in the seismic quantification (Step 3), whereas the ground motion response spectra are used as an input to the seismic response calculations (including soil-structure interaction effects). The seismic response calculations are used in the development of seismic fragilities of SSCs (Step 2).

Seismic hazard is usually expressed in terms of the annual frequency of exceeding a specified value of ground motion parameter (e.g., peak ground acceleration) at the site. The different steps of seismic hazard analysis are:

- Identification of the sources of earthquakes, such as faults and seismo-tectonic provinces.
- Evaluation of the earthquake history of the region to assess the frequencies of occurrence of earthquakes of different magnitudes or epicentral intensities.
- Development of attenuation relationships to estimate the intensity of earthquake-induced ground motion (e.g., PGA) at the site.
- Integration of the above information to estimate the frequency of exceedance for selected ground motion parameters.

The hazard estimate depends on uncertain estimates of attenuation, upper-bound magnitudes, and geometry of the postulated seismic sources. Such uncertainties are included in the hazard analysis by assigning probabilities to alternative hypotheses about these parameters. A probability distribution for the frequency of occurrence is thereby developed. The annual frequencies for exceeding specified values of PGA are displayed as a family of curves with different probabilities or with different fractiles. These are known as “seismic hazard curves.” A mean hazard curve is obtained as the weighted sum of the hazard curves; the weighting factor is the probability assigned to each hazard curve. The full family of seismic hazard curves could be used for uncertainty analysis in the SPRA.

The technical requirements for performing the PSHA including documentation are given in the ASME/ANS PRA Standard Section 5-2.1 (HLR-SHA-J) and supporting references.

The procedure for deriving ground motion response spectra at a specified elevation in the soil profile (the “control-point”) for a specific site using the rock PSHA results is described in RG 1.208.

For Vogtle Units 1 and 2, SNC is expected to conduct PSHA in response to NRC Letter 50.54(f); the results should be available in mid 2013. In the mean time, the seismic hazard curves and GMRS that have been developed for Early Site Permit of Vogtle Units 3 and 4 could be used as input to the SPAR SPRA model.

DRAFT

Step 2 – Seismic Fragility Evaluation

Seismic fragility of a structure, system, or component (SSC) is the conditional probability of the failure at a given hazard input level. This input parameter could be peak ground acceleration (PGA), peak spectral acceleration, floor spectral acceleration, or others. Seismic fragilities are needed in a PRA to estimate the conditional probabilities of occurrence of initiating events (i.e., loss of emergency AC power, small LOCA, etc) and the conditional failure probabilities of different mitigating systems (e.g., auxiliary feedwater system). The fragility calculation typically uses a double lognormal model with three parameters, which are the median acceleration capacity (A_m), the logarithmic standard deviation of the aleatory (randomness) uncertainty in capacity (β_R), and the logarithmic standard deviation of the epistemic (modeling and data) uncertainty in the median capacity (β_U). The aleatory and epistemic uncertainty can be combined into a composite variability. The fragility using a composite variability is referred to as the mean fragility.

The ground acceleration capacity of an SSC is estimated using information on plant design bases, responses calculated at the design analysis stage, as-built dimensions, and material properties. Because there are many variables in the estimation of this ground acceleration capacity, seismic fragility is described by a family of fragility curves; a probability value is assigned to each curve to reflect the uncertainty in the capacity estimation. This family of fragility curves is characterized by three parameters: A_m, β_R and β_U. When separation of the uncertainties into aleatory and epistemic is not justified on the basis of available data, fragility curves can be characterized in terms of the median and composite variability.

Seismic fragilities of structures and equipment are calculated using many sources: plant-specific seismic design and qualification data, fragility test data, generic seismic qualification test data, and earthquake experience data. In a typical SPRA, more than 500 components (so called Seismic Equipment List –SEL) are identified as requiring evaluation. The starting point for constructing such an SEL is the internal events PRA model to which are added a number of SSCs with earthquake-specific issues such as including passive components and structures. Further some generically seismically rugged components such as check valves and manual valves are screened out from the internal event PRA model. The study site is a soil site for which site-specific soil failures such as soil liquefaction are considered in the development of the SEL.

A plant walkdown is performed to screen out a large number of these SEL items based on their generically high seismic capacities and on lack of obvious seismic deficiencies (such as poor anchorage and inadequate lateral support) and spatial interactions (e.g., a nonseismically qualified component failing and falling on the SEL item). For the remaining components, seismic fragilities are calculated using one or more of the data sources.

The supporting requirements for seismic fragility evaluation including documentation are given in the ASME/ANS PRA Standard Section 5-2.2. Currently, the utility has conducted the seismic walkdown of the SEL items on Vogtle Unit 1 using industry experts. The components are grouped into three bins: High, Medium and Low. The “High” capacity components could be screened out from the PRA model. The “Medium” and “Low” capacity components need plant-specific seismic fragilities. New seismic response analyses of the plant buildings are planned by the utility using the Ground Motion Response Spectra (GMRS) to be developed as part of PSHA (see Step 1 above). Therefore, the seismic fragility information specific to Vogtle will not be available for the Level 3 PRA project. In the meantime, a representative or generic set of seismic fragilities will have to be used to complete and exercise the Project SPAR SPRA model.

This process also will involve approximate methods to account for differences in spectral shapes between the GMRS and response spectra used in the derivation of generic fragility data and potential effects of these differences on seismic loads on SSCs. Under the Contingency task, NRC (or contractor) seismic/structural experts should review the Vogtle walkdown report and assign generic seismic fragilities to SEL items that are in the “medium” and “low” capacity bins. The fragility input to Project SPAR SPRA model can be revised when the Vogtle-specific seismic fragilities become available.

Step 3 – Seismic Plant Response Analysis

The objective of seismic plant response analysis is to calculate the frequencies of core damage and large early release resulting from seismic events. This is done by combining the plant logic with component fragilities and seismic hazard estimates. Similar to the internal event PRA, event trees and fault trees are constructed to identify the accident sequences that may lead to core damage and large early release. Typically, the internal-events PRA model is used as the basis for developing the SPRA mode. Systems analysis for SPRA generally consists of both adding some earthquake-related basic events to the internal event PRA model and also “trimming” some aspects of that model that do apply for seismic model. It is important that the plant response analysis model all important failures, including both failures caused by the earthquake and non-seismic failures and human errors. To address human errors, human reliability analysis (HRA) will be performed as generally described in Section 7, supplemented by guidance for addressing operator manual actions (e.g., NUREG-1921), and extended to address human performance issues specific to seismic events. ASME/ANS PRA Standard Part 5 Section 5-2.3 gives the technical requirements for the seismic response analysis including quantification of CDF and LERF.

The SNC has started on the SPRA of Vogtle Units 1 and 2. Since the SEL had been generated to guide the plant walkdown, it is expected that preliminary SPRA model in terms of event trees and fault trees could be available. Use of this SPRA model is more efficient than creating a model for SPAR using the internal event PRA model.

13.1.1.4 Documentation

Document the seismic analysis including the PSHA, seismic fragility evaluation and seismic plant response. Table 13-2 provides details of documentation needs. The documentation (along with the identified inputs described in Section 13.1.1.2) are succinct and transparent in enabling an independent quality assurance (QA) and peer review.

DRAFT

Table 13-2 Documentation Needs for Subtask 2-1.1

Item	Description
PSHA	Document the process used in the PSHA. This includes a description of: • The specific methods used for source characterization and ground motion characterization. • The scientific interpretations that are the basis for the inputs and results. • If an existing PSHA is used, adequate documentation to ensure the spirit of the requirements discussed in the ASME/ANS PRA Standard. • The specific methods and data used to develop the site-specific soil response. In addition, identify the sources of model uncertainty and related assumptions associated with the PSHA.

Fragility Analysis	Document the process used in the seismic fragility analysis. This includes a description of:
	
	• The methodologies used to quantify the seismic fragilities of structures, or systems, or components, or a combination thereof, together with key assumptions.
	• The structure, or system, or component, or a combination thereof (SSC) fragility values that includes the method of seismic qualification, the dominant failure mode(s), the source of information, and the location of the component.
	• The fragility parameter values (i.e., median acceleration capacity [A_m], aleatory [β_R] and epistemic [β_U] uncertainties) and their technical bases for each analyzed SSC.
	• The different elements of seismic-fragility analysis, such as:
	  o the seismic response analysis
	  o the screening steps (seismic equipment list)
	  o the walkdown
	  o the review of design documents
	  o the identification of critical failure modes for each SSC
	  o the calculation of fragility parameter values for each SSC modeled

Plant Response Analysis	Document the process used in the seismic plant response model analysis and quantification. This includes a description of: • The specific adaptations made in the internal events PRA model to produce the seismic-PRA model, and their bases. • The major outputs of a SPRA are similar to those for Level 1 at power PRA, which at a minimum includes mean core damage frequency (CDF), mean large early release frequency (LERF), uncertainty distributions on CDF and LERF, results of sensitivity studies, and significant risk contributors.

13.1.1.5 Task Interfaces

The various technical steps of at-power seismic events PRA are dependent on other technical elements for information in order for the step to be completed. The interface that is applicable to SPRA follows:

1. Step 3 outputs (i.e., CDF sequences) are inputs to the Level 2 analysis. This step also requires the Level 1 at-power internal events PRA model, as input.

13.1.1.6 References

1. ASME/ANSPRA Standard: Standard for Level 1/Large Early Release Frequency Probabilistic Risk Assessment for Nuclear Power Plant Applications, ASME/ANS Ra-Sa-2009.
2. RG 1.208, "A Performance-Based Approach to Define the Site-Specific Earthquake Ground Motion," March 2007.
3. Southern Nuclear Company, Vogtle Early Site Permit Application, Part 2- Site Safety Analysis Report, Revision 5, December 2008.
4. Vogtle Electric Generating Plant Individual Plant Examination of External Events (IPEEE), Unit 1 and Unit 2, Volume 2, November 1, 1995.

13.1.2 Subtask 2-1.2: Level 1 Reactor PRA for At-Power and High Winds

The Vogtle Units 1 and 2 plants have been designed for the Design Basis Tornado (DBT) with a maximum wind speed of 360 mph specified in the Regulatory Guide (RG) 1.76 [4], and the units are not exposed to the hurricane hazard, since they are not located on the coast.

The current design basis tornado wind speed for Region I derived from a probabilistic tornado hazard analysis and having an exceedance probability of $1x10^{-7}$ per year is only 230 mph. The corresponding wind speed at the Vogtle site is 208 mph (Table 6-1 of NUREG/CR-4461 Revision 2 [3]). This value is less than that specified in RG 1.76, and it is much less when compared to the DBT for Vogtle Units 1 and 2. Therefore, using the screening criteria in ASME/ANS PRA Standard Part 6, the high winds events were screened-out from the at-power PRA for Vogtle Units 1 and 2. Nevertheless, the present section addresses the elements of the Level 1 reactor, at power high winds PRA following the ASME/ANS PRA Standard Section 7-2 [1].

The PRA for the high winds has been carried out for several U.S. nuclear power plants, and only in a few cases it involved detailed PRA modeling (e.g., Indian Point Unit 2, as part of the individual plant examination of external events [IPEEE]). Also, the hazard analysis carried out during the design stage provides a basis for the screening analyses and demonstrably conservative analyses using the approaches in Part 6 of the ASME/ANS PRA Standard. These approaches have usually shown that the contribution of high winds to CDF is insignificant. The collective experience with detailed high-winds PRA is limited, however. Because of this limited experience, it might be needed to improvise the approach to high-winds PRA analysis following the overall methodology requirements in Section 7-2 of the ASME/ANS PRA Standard. The technical requirements for high-winds PRA are similar, with adaptations, to those for seismic PRA.

Based on the ASME/ANS PRA Standard Section 7-2 [1], the major elements of the high winds PRA are:

- High wind hazard analysis (WHA) – This element involves the evaluation of the frequency of occurrence of different intensities of high winds based on a site-specific probabilistic evaluation reflecting recent available data and site-specific information.

- High wind fragility evaluation – This element evaluates the fragilities of the structures, systems, or components as a function of the intensity of the high wind using plant-specific, SSC-specific information and an accepted engineering method for evaluating the postulated failure.

- High wind plant response model – This element develops a plant response model that addresses the initiating events and other failures resulting from the effects of high wind that can lead to core damage or large early release. The model is usually based on the internal events, at-power PRA model that incorporates those aspects that are different, due to the effects of high wind, from the corresponding aspects of the at-power, internal events model.

13.1.2.1 Assumptions and Limitations

The following are a list of the assumptions and limitations that define the scope and level of detail performed for this task:

- The analysis may be qualitative, quantitative, or a combination of each, as the site-specific hazard characteristics warrant it.

- The level of detail of modeling and analysis will be in accordance with the potential impacts of the high winds risks.

- It is assumed that documentation for plant systems are available to the full scope site Level 3 PRA Project.

- The CDF sequences and their end-states will be defined in the same manner as those in the internal event CDF sequences so that the interface from Level 1 to Level 2 to be set up in the internal events SPAR model can be used by the Level 2 task, if needed.

13.1.2.2 Inputs

The design, maintenance, and operational information required to perform the associated steps 1, 2, and 3 are identified in Table 13-3. This table lists the minimum information required to perform each step.

Table 13-3 Required Inputs for Subtask 2-1.1

Input	Description (1)

Design/Engineering	• Site characteristic input for WHA
	  ○ Historical site and area wind data
	• Fragility analysis inputs
	  ○ High Wind design criteria for SSCs
	  ○ Spatial layout, sizing, and accessibility information related to the credited SSCs.

Input	Description (1)
	○ Design reports and calculations for buildings and yard equipment to withstand design basis tornado, hurricane and wind generated missiles • High wind plant response model ○ SSC success criteria ○ Level 1 internal events SPAR model
Operation	• High wind plant response model ○ That information needed to reflect the actual operating procedures and practices used at the plant including when and how operators interface with plant equipment as well as how plant staff monitor equipment operation and status after a high wind event
Maintenance	None
Note (1) – Much of the above information can be gathered and is confirmed via plant walkdown and personnel interviews.	

13.1.2.3 Analysis Steps

The high wind events analysis consists of the following three interrelated steps:

1. High wind hazard analysis
2. High wind fragility evaluation
3. High wind plant response model

These steps are described below; however, for more detailed guidance, see the ASME/ANS PRA Standard [1].

Step 1 – High Wind Hazard Analysis

The objective of the high wind hazard analysis is to calculate the frequency of occurrence of high wind as a function of intensity (i.e., wind speed) on a site-specific basis. Depending on the site location, the wind types to be considered are: tornado, hurricane, extratropical wind storms and other straight wind phenomena. The output of the wind hazard analysis is a family of wind hazard curves; each curve showing the annual frequency of exceeding different wind speeds is assigned a subjective probability.

The hazard from wind-generated missiles is also evaluated. A survey of the plant building and surroundings is done to assess the number, types, and locations of potential missiles.

Step 2 – High Wind Fragility Evaluation

The objective of the fragility analysis is to identify the SSCs that susceptible to the effects of high winds and to determine their plant-specific failure probabilities as a function of wind speed. Wind fragility is evaluated using the same general methodology as for the seismic fragilities. Typically, the entire family of fragility curves for an SSC corresponding to a particular failure mode is expressed in terms of the median wind-speed capacity (V_m), the logarithmic standard deviations β_R and β_U representing randomness in capacity and uncertainty in the median capacity, respectively. Such fragility parameters are estimated for the credible failure modes of the SSC. Failure of structures could be overall, such as failure of a shear wall or moment resisting frame, or local such as out-of-plane wall failure or pull out of metal siding. Typically,

failure of a structure is assumed to fail all equipment housed within the structure. Tanks and other equipment located outdoors are exposed to the hazard from wind-borne missiles.

Step 3 – High Wind Plant Response Model

The objectives of the high wind plant response model are to:

- Develop the model by modifying the at-power internal event PRA model to include the effects of the wind in terms of initiating events and their consequent failures.

- Quantify this model to provide the conditional core damage probability (CCDP) and conditional large early release probability (CLERP) for each defined high wind plant damage state.

- Evaluate the unconditional CDF and LERF by integrating the CCDP/CLERP with the frequencies of the plant damage states obtained by combining the high wind hazard and high wind fragility.

The above steps describe the elements of a detailed PRA that could be conducted for high winds. The most common method for developing the external hazard PRA systems model is to start with the internal events systems model (i.e., fault trees and event tress) and adapt it by adding and modifying events to represent the consequential failure causes. In this approach the resulting model is consistent with the internal events systems model regarding plant response and the cause-effect relationships of the failures. The analysis consists of developing event trees and fault trees in which the initiating event can be either the extreme wind effect itself or a transient or loss-of-coolant accident induced by the extreme winds. Other factors to be considered include non–wind-related unavailabilities or failures of equipment, operator errors, any warning time available to take mitigating steps (e.g., in the case of hurricanes), the possibility of recovery actions by operators and replacement by substitutes to accomplish the needed function, and the likelihood of common-cause failures. To address operator errors and operator non-recovery actions, human reliability analysis (HRA) will be performed as generally described in Section 7, supplemented by guidance for addressing operator manual actions (e.g., NUREG-1921), and extended to address human performance issues specific to high winds.

Based on the modeling, accident sequences that lead to core damage or large early release are identified, and their conditional probabilities of occurrence are calculated. The frequency of core damage or large early release is obtained by a convolution over the relevant range of hazard intensities.

13.1.2.4 Documentation

The analysis of high wind events including the high wind hazard analysis, high wind fragility evaluation, and high wind plant response model should be documented in accordance with the requirements set forth in the ASME/ANS PRA Standard Section 7-2. Table 13-4 provides details of documentation needs. The documentation (along with the identified inputs described in Section 13.1.2.2) are succinct and transparent in enabling an independent quality assurance (QA) and peer review.

Table 13-4 Documentation Needs for Subtask 2-1.1

Item	Description
High Wind Hazard Analysis	DOCUMENT the process used to identify the wind hazards. This includes a description of: • The specific methods used for determining the high-wind hazard curves. • The associated wind pressure, pressure distributions, missile and differential pressure effects. • The scientific interpretations that are the basis for the inputs and results. In addition, the sources of model uncertainty and related assumptions associated with the wind hazard analysis should be documented.
High Wind Fragility Evaluation	DOCUMENT the process used in the wind fragility analysis. This includes a description of: • The methodologies used to quantify the high-wind fragilities of structures, or systems, or components, or a combination thereof (SSCs), together with key assumptions. • A detailed list of SSC fragility values that includes the method of analysis, the dominant failure mode(s), the sources of information, and the location of each SSC. • The fragility parameter values (i.e., median wind-speed capacity [V_m], aleatory [β_R], and epistemic [β_U] uncertainties) and their technical bases for each analyzed SSC. • The basis for the screening out of any generic high-capacity structures, or systems, or components, or a combination thereof (SSCs).
High Wind Plant Response model	DOCUMENT the process used in the wind plant response analysis and quantification. This includes a description of: • The specific adaptations made to the internal events PRA model to produce the high-wind PRA model, and their bases. • The final results of the PRA analysis in terms of core damage frequency and large early release frequency, as well as selected intermediate results including uncertainty distributions on CDF and LERF, results of sensitivity studies, and significant risk contributors.

DRAFT

13.1.2.5 Task Interfaces

The various technical steps of at-power high wind events PRA are dependent on other technical elements for information in order for the step to be completed. The interface that is applicable to high winds PRA follows:

- Step 3 outputs (i.e., CDF sequences) are inputs to the Level 2 PRA. This step also requires Level 1 at-power internal events PRA model, as input.

13.1.2.6 References

1. ASME/ANS RA-Sa-2009, "Standard for Level 1/Large Early Release Frequency Probabilistic Risk Assessment for Nuclear Power Plant Applications," February 2009.
2. Southern Nuclear Company Vogtle Early Site Permit Application, Part 2 – Site Safety Analysis Report, Revision 5, December 2008.
3. V. Ramsdell and G.L. Andrews, "Tornado Climatology of the Contiguous United States," Battelle Pacific Northwest Laboratories and U.S. Nuclear Regulatory Commission NUREG/CR-4461, Revision 2, February 2007.
4. RG. 1.76, "Design-Basis Tornado and Tornado Missiles for Nuclear Power Plants," Revision 1, March 2007.

13.1.3 Subtask 2-1.3: Level 1 Reactor PRA for At-Power and External Floods

As shown in the IPEEE of Vogtle Units 1 and 2 and in the Early Site Permit Application for Vogtle Units 3 and 4, the design basis flood determined from a breach of upstream dams produces a flood elevation level of 178.10 feet (ft) mean sea level (MSL). This elevation is well below the site grade elevation of 220 ft MSL. Therefore, Vogtle is considered to be a "dry site" and no external flooding analysis has been performed by the licensee. Nevertheless, the present section addresses the elements of the Level 1 reactor, at power for external flooding PRA following the ASME/ANS PRA Standard Section 8-2 [1]. For the Level 3 PRA project, detailed quantitative risk analysis is not anticipated for external flooding, based on what is known about the site characteristics, and expected evaluation results in response to the Fukushima-related NRC request.

External flooding evaluation has been carried out for U.S. nuclear power plants using mostly deterministic bounding analysis. Also, the hazard analyses carried out during the design stage provides a basis for the screening analyses and demonstrably conservative analyses using the approaches in Part 6 of the ASME/ANS PRA Standard. These approaches, based on a combination of using the recurrence intervals for the design-basis floods and analyzing the effectiveness of mitigation measures to prevent core damage, have led to the judgment that the contribution of external floods to CDF is small. The collective experience with PRA external-flooding analysis is limited, however. The technical requirements for external-flooding PRA including local precipitation are similar, with adaptations, to those for internal-flooding PRA and seismic PRA.

The major elements of the external flood PRA are:

- External flood hazard analysis
  This element involves the evaluation of the frequency of occurrence of different external flood severities based on a site-specific probabilistic evaluation reflecting recent available data and site-specific information.

- External flood fragility analysis (involving analysis of flooding pathways and water levels)
  This element evaluates the susceptibility of plant structures, systems, or components as a function of the severity of the external flood using plant-specific, SSC-specific information and an accepted engineering method for evaluating the postulated failure.

- External flood plant response model and quantification
  This element develops a plant response model based on the internal events, at-power PRA model, that addresses the initiating events and other failures resulting from the effects of external flooding that can lead to core damage or large early release.

For flooding hazard analysis, two new documents are being created by the nuclear utilities in response to the NRC 10 CFR 50.54(f) to be used to identify and evaluate external flooding scenarios. These documents are:

- R2.3: Flood Protection Walkdowns Report (expected availability Dec 2012)
- R2.1: Flood Hazard Reevaluation Report (expected availability April 2013)

Recently, the NRC has issued a draft Interim Staff Guidance (JLD-ISG-2012-05) "Guidance for Performing the Integrated Assessment for Flooding," for public comment [3]. This ISG describes the different aspects of external flood assessment (i.e., flood hazard, capability of passive and active barriers and reliability of emergency procedures) and provides several options for evaluation of flood mitigation capability (i.e., scenario based approach, margins-type evaluation and use of PRA).

In the draft ISG (JLD-ISG-2012-05), it is stated "For most flood mechanisms, widely accepted and well-established methodologies are not available to assign initiating event frequencies to severe floods using probabilistic flood hazard assessment (Ref. 4). For this reason, the Integrated Assessment does not require the computation of initiating flood-hazard frequencies. It is not acceptable to use initiating event frequencies to screen out flood events in lieu of evaluation of flood protection features at the site. However, if desired and given appropriate justification, the use of flood event frequency is deemed acceptable for use as part of a PRA."

The draft ISG also provides an option for a margins-type evaluation of mitigation capability wherein the conditional core damage probability and conditional large early release probability are calculated for a selected flood scenario taking into account the passive barriers, active barriers and emergency procedures.

13.1.3.1 Assumptions and Limitations

The list of assumptions and limitations that define the scope and level of detail performed for this task follows:

- The analysis may be qualitative, quantitative, or a combination of each, as the site-specific hazard characteristics warrant it.

- The level of detail of modeling and analysis will be in accordance with the potential impacts of the expected external flood risks.

- It is assumed that documentation for plant systems are available and can be used as reference if needed.

- The CDF sequences and their end-states will be defined in the same manner as those in the internal event CDF sequences so that the interface from Level 1 to Level 2 to be set up in the internal events SPAR model can be used by the Level 2 task, if needed.

13.1.3.2 Inputs

The design, maintenance and operational information required in order to perform the associated steps of external flooding analysis are identified. The information needed to perform each step, at a minimum, is listed in Table 13-5.

Table 13-5 Required Inputs for Subtask 2-1.3

Input	Description
Design/Engineering	• Site characteristic input for flood hazard analysis o Site maximum probable precipitation, probable maximum flood. o Locations and design criteria for upstream dams, if any. • Design input for external flood fragility evaluation o External flood design criteria. o Spatial layout, sizing, and accessibility information related to the credited SSCs. o Reports on external flood design of buildings and equipment, flood dikes and flood doors, if any. o Procedures for performing emergency measures (e.g., sand-bagging, pumping out water, etc). • Plant response model and quantification o Level 1 Internal events SPAR model.
Operation	• Plant response analysis o That information needed to reflect the actual operating procedures and practices used at the plant including when and how operators interface with plant equipment as well as how plant staff monitor equipment operation and status after an external flood.
Maintenance	None.

13.1.3.3 Analysis Steps

The external flood analysis consists of three interrelated steps:

1. External food hazard analysis
2. External flood fragility evaluation
3. External flood plant response model and quantification

These steps are described below; however, for more detailed guidance, see the ASME/ANS PRA standard.

Step 1 – External Flood Hazard Analysis

The objective of the flood hazard analysis is to calculate the frequency of occurrence of external floods as a function of severity on a site-specific basis. Depending on the site location, the flood types to be considered are: extreme local precipitation, river flooding, ocean flooding, lake flooding, flooding induced by tsunami and flooding caused by the failure of a dam, levee or dike. ASME/ANS PRA Standard Section 8-2 supporting requirement XFHA-B describes the documentation needs for the external flood hazard analysis.

Step 2 – External Flood Fragility Evaluation

The objective of the external flood fragility analysis is to identify the SSCs that susceptible to the effects of external floods and to determine their plant-specific failure probabilities as a function of external flood. Flood fragility could be evaluated using the same general methodology as for the seismic fragilities. Typically, the entire family of fragility curves for an SSC corresponding to a particular failure mode is expressed in terms of the median flood height capacity, H_m, and the logarithmic standard deviations, β_R and β_U, representing randomness in capacity and uncertainty in median capacity, respectively. Such fragility parameters are estimated for the credible failure modes of the SSC.

Flood-caused failure of equipment is typically due to immersion, although in some instances, particularly applicable to structures, the failure may be due to flow-induced phenomena. Failure of structures could be overall, such as due to a foundation failure, or local, such as failure of a wall or barrier leading to leakage or major flooding through the wall or barrier.

ASME/ANS PRA Standard Section 8-2 supporting requirement XFFR-B describes the documentation needs for the external flood fragility analysis.

Step 3 – Flood Plant Response Model and Quantification

The objectives of the flood plant response model and quantification are to:

- Develop a flood plant response model by modifying the internal event at-power PRA model to include the effects of the external flood in terms of initiating events and failures caused.

- Quantify this model to provide the conditional core damage probability (CCDP) and conditional large early release probability (CLERP) for each defined external flood plant damage state.

- Evaluate the unconditional CDF and LERF by integrating the CCDP/CLERP with the frequencies of the plant damage states obtained by combining the external flood hazard and external flood fragility.

The above steps describe the elements of a detailed PRA that could be conducted for external floods. Similar to seismic and high wind PRA, the external-flooding-PRA systems-analysis model is almost always based on the internal-events, at-power PRA systems model, to which are added basic failure events derived from the information developed in the flooding fragility analysis. The analysis consists of developing event trees and fault trees in which the initiating event can be either the extreme flood itself or a transient or loss-of-coolant accident induced by the extreme flood. Other factors to be considered include non–flooding-related unavailabilities or failures of equipment, operator errors, any warning time available to take mitigating steps, the

possibility of recovery actions by operators and replacement by substitutes to accomplish the needed function — and the likelihood of common-cause failures. The clogging of intake structures and other flow paths by debris related to the flooding must also be considered, and a walkdown is important to ensure that this issue has been evaluated properly.

To address operator errors and operator non-recovery actions, human reliability analysis (HRA) will be performed as generally described in Section 7, supplemented by guidance for addressing operator manual actions (e.g., NUREG-1921), and extended to address human performance issues specific to external floods.

One key consideration that differentiate the external flooding from high winds and seismic is that most large external floods occur only after significant warning time or extended duration that allows the plant operating staff to take appropriate steps to secure the plant and its key equipment. This warning time and the typical situation in which the plant grade is well above any credible flooding phenomena are the principal reasons why external-flooding risks are not often found to be important contributors to overall risks. And some plants like Vogtle can screen this event from further consideration. This time delay provides ample time to take credit for compensatory actions per plant's planning and procedures. Based on the modeling, accident sequences that lead to core damage or large early release are identified, and their conditional probabilities of occurrence are calculated. The frequency of core damage or large early release is obtained by a convolution over the relevant range of hazard intensities.

ASME/ANS PRA Standard Section 8-2 supporting requirement XFPR-B describes the documentation needs for the flood plant response analysis.

13.1.3.4 Documentation

Document the external flood analysis including the external flood hazard analysis, external flood fragility evaluation and external flood plant response model and quantification. Table 13-6 provides details of documentation needs. The documentation (along with the identified inputs described in Section 13.1.3.2) are succinct and transparent in enabling an independent quality assurance (QA) and peer review.

DRAFT

Table 13-6 Documentation Needs for Subtask 2-1.3

Product	Description
External Flood Hazard Analysis	Document the process used to identify external flood hazards. This includes a description of the specific methods used for determining the external flooding hazard curves, including the scientific interpretations that are the basis for the inputs and results. In addition identify the sources of model uncertainty and related assumptions associated with the external flood hazard analysis.
External Flood Fragility Analysis	Document the process used in the external flood fragility analysis. This includes a description of: • Methodologies used to quantify the flooding-caused fragilities of SSCs, together with key assumptions. • The basis for the screening out of any SSCs for which the screening basis is other than the SSC being located where flooding does not occur. • SSC fragility values that includes the method of analysis, the dominant failure mode(s), the sources of information, and the location of each SSC. • Fragility parameter values (i.e., median flood height capacity, H_m, and the logarithmic standard deviations, β_R and β_U) and their technical bases for each analyzed SSC.
External Flood Plant Response Model and Quantification	Document the process used in the external flood plant response analysis and quantification. This includes a description of: • The specific adaptations made to the internal events PRA model to produce the external flooding-PRA model, and their bases. • The final results of the PRA analysis in terms of core damage frequency and large early release frequency, uncertainty analysis, as well as selected results on risk contributors.

13.1.3.5 Task Interfaces

The various technical steps of external flood PRA are dependent on other technical elements for information in order for the step to be completed. The interface that is applicable to external flooding PRA follows:

- Step 3 outputs (i.e., CDF sequences) are inputs to the Level 2 PRA model. This step also requires Level 1 at-power internal events PRA model, as input.

13.1.3.6 References

1. ASME/ANS RA-Sa-2009, "Standard for Level 1/Large Early Release Frequency Probabilistic Risk Assessment for Nuclear Power Plant Applications," February 2009.
2. Southern Nuclear Company Vogtle Early Site Permit Application, Part 2 – Site Safety Analysis Report, Revision 5, December 2008
3. DRAFT Interim Staff Guidance JLD-ISG-2012-05, "Guidance for Performing the Integrated Assessment for Flooding," Japan Lessons-Learned Project Directorate, September 20, 2012. (ADAMS Accession No. ML12235A319.)
4. "Design-Basis Flood Estimation for Site Characterization at Nuclear Power Plants in the United States of America," NUREG/CR-7046. November 2011. (ADAMS Accession No. ML11321A195.)

13.1.4 Subtask 2-1.4: Level 1 Reactor PRA for At-Power and Other External Hazards

The Level 1 Reactor PRA analysis of other external hazards for at-power operation is to be performed to estimate the risk from site-specific external hazards other than seismic hazards. This risk will be characterized by calculating the plant CDF (Level 1 analysis), if possible; otherwise by a qualitative characterization will be performed. Parts 6 and 9 of the ASME/ANS Level 1/LERF PRA standard provide technical requirements related to the performance of this subtask.

This analysis consists of the following three interrelated steps:

- Review of plant specific external hazard data and licensing bases
  The objective of this step is to become familiar with and asses the existing licensee analyses with regard to other external hazards and the existing Level 1 PRA model for the subject plant site.

- Screening analyses
  The objective of this step is to determine whether a particular external hazard can be eliminated from further consideration in the at-power, Level 1 reactor PRA model for internal and external hazards for the subject plant. This step consists of either qualitative or quantitative screening, or a combination of both. This analysis will conform to the ASME/ANS Level 1/LERF PRA standard technical elements for the screening of other external hazards (EXT).

- Modeling of unscreened external hazards
  The objective of this step is to model any unscreened external hazards from the previous step into the existing SPAR Level 1 PRA model for the subject plant. This modeling will conform to the ASME/ANS Level 1/LERF PRA standard technical elements for other external hazards analysis (XHA), external hazards fragility analysis (XFR), and external hazard plant response modeling (XPR).

13.1.4.1 Assumptions and Limitations

The following are a list of assumptions and limitations that define the scope and level of detail performed for this task.

- The analysis may be qualitative, quantitative, or a combination of each, as is warranted by the site-specific external hazard characteristics. It is assumed that the external hazards under consideration will consist of the external hazards listed in Appendix 6-A of the ASME/ANS RA-Sa-2009 PRA standard.

- The level of detail of modeling and analysis will be in accordance with the limited resources allocated to this task. See below for resource estimates.

- It is assumed that documentation for plant systems etc. have already been obtained from the licensee and are available and for review and use as reference.

- It is assumed that a carefully selected vendor who is competent and has experience in this area will be available; with previous experience for creating similar models with limited resources.

- It is assumed that the at-power Level 1 reactor PRA for internal hazards has been completed or is nearly complete.

13.1.4.2 Inputs

The design, maintenance and operational information required in order to perform the associated steps of the Level 1, at-power reactor PRA for other external hazards analysis are identified. This information (along with the identified products, Section 13.1.4.2) should allow an independent analyst to reproduce the various results. The information needed to perform each step, at a minimum, is listed below in Table 13-7.

Table 13-7 Needed Inputs for Subtask 2-1.3

Input	Description
Step 1: Review of plant specific external hazard data and licensing bases	
Plant design information	This input may consist of the subject plant FSAR, engineering drawings, Operating License, etc. This information will be needed to starting this step.
Licensee PRA information	Licensee PRA documentation, peer review findings, , the licensee's Level 1 at-power PRA model for other external hazards, etc.. This information will be needed prior to starting this step.
Step 2: Screening analysis	
Plant walkdowns	Plant walkdowns may be performed after the screening analyses are complete, as needed, to assess the validity of the assumptions used in the qualitative and quantitative screening analyses. Depending on whether an external hazard is screened qualitatively or quantitatively, these walkdowns may include locations both inside buildings and around the site. Walkdowns may.
Step 3: Modeling of unscreened external hazards	
Plant walkdowns	Plant walkdowns may be performed at an appropriate time

Input	Description
	during the modeling of unscreened external hazards, as needed, to assess the validity of the assumptions used in the external hazard analysis, fragility evaluation, and plant response model development. Depending on whether an external hazard is screened qualitatively or quantitatively, these walkdowns may include locations both inside buildings and around the site.

13.1.4.3 Analysis Steps

The Level 1, at-power reactor PRA for other external hazards analysis consists of three interrelated steps:

1. Review of plant specific external hazard data and licensing bases
2. Screening Analysis
3. Modeling of unscreened external hazards

Step 1 – Review of Plant Specific External Hazard Data and Licensing Bases

The objective of this step is to become familiar with and asses the existing licensee analyses with regard to other external hazards and the existing Level 1 PRA model for the subject plant site.

The review of the subject plant licensing bases and plant specific external hazard data is performed for general familiarization of the plant site and documenting all previous other external hazards analyses. This step includes reviewing licensee PRA documentation as well as for the identification of any significant changes since the operating license (OL) issuance relative to (1) military and industrial facilities within 5 miles of the site, (2) onsite storage or other activities involving hazardous materials, (3) transportation, or (4) developments that could affect the original design conditions. Documentation should include descriptions of significant changes at the subject plant site since the issuance of the OL as well as a list of those analyses already performed with regard to other external hazards.

DRAFT

Table 13-8 Documentation Needs for Step 1 of Subtask 2-1.3

Item	Description
Significant changes to OL since issuance	For a given change to the OL, this documentation should provide a detailed description of the change and why the change was implemented.

Step 2 – Screening Analysis

The objective of this step is to screen out those external hazards which cannot or do not significantly impact site risk and are therefore eligible to be excluded from further consideration in the PRA.

The screening analysis starts with a review of the list of external hazards requiring consideration in Appendix 6-A of the ASME/ANS Level 1/LERF PRA standard. A progressive screening approach will be used wherein a qualitative screening is performed first followed by a quantitative screening to determine if any external hazards other than seismic hazards can be removed from further consideration. The basis for screening any external hazard may be confirmed through a walkdown of the plant and its surroundings, as needed. Any inconsistencies between the plant walkdowns and the screening analyses assumptions for a given external hazard should be incorporated and the screening analysis should be redone accordingly.

Documentation of these analyses will be performed in a manner that facilitates PRA applications, upgrades, and peer review. The process used to screen each external hazard should be documented so as to describe the approach used for screening, the screening criteria used for each screened external hazard, and any engineering or other analyses performed to support a bounding or demonstrably conservative analysis for screening out an external hazard. Documentation should be consistent with the supporting requirements in the ASME/ANS Level 1/LERF PRA standard.

Table 13-9 Documentation Needs for Step 2 of Subtask 2-1.3

Item	Description
Qualitative Screening Analysis	An initial qualitative screening is performed to determine if any of the external hazards from the Appendix 6-A list meet any one of the five screening criteria in supporting requirement EXT-B1 of the ASME/ANS Level 1/LERF PRA standard. A second preliminary screening is performed on the remaining external hazards to determine if the plant's design basis for the event meets the NRC 1975 Standard Review Plan. Documentation should be consistent with HLR-EXT-E.
Quantitative Screening Analysis	A bounding or demonstrably conservative analysis is performed using defined quantitative screening criteria to demonstrate that an external hazard can be removed from further consideration, as per HLR-EXT-C in the ASME/ANS PRA Level 1/LERF standard. Documentation should be consistent with HLR-EXT-E.

Item	Description
Confirmatory Plant Walkdown Findings	Confirmatory plant walkdowns may be performed, as needed, to determine the validity of the assumptions used in a given screening analysis, as per HLR-EXT-D in the ASME/ANS Level 1/LERF PRA standard. Documentation should be consistent with HLR-EXT-E.

Step 3 – Modeling of Unscreened External Hazards

The objective of this step is to incorporate models for any unscreened external hazards into the Level 1 reactor PRA for at-power operation.

In general, the following activities are performed for a given external hazard that was not screened out in Step 2: an external hazard analysis; an external hazard fragility evaluation; and development of an external hazard plant response model. The external hazard analysis involves the evaluation of the frequency of occurrence of different intensities of the external hazard based on a site-specific probabilistic evaluation reflecting recent available data and site-specific information. The external hazard fragility evaluation involves the evaluation of the fragilities of the structures, systems, or components as a function of the intensity of the external hazard using plant-specific, SSC-specific information and an accepted engineering method for evaluating the postulated failure. The development of the external hazard plant response model involves the development of a plant response model that addresses the initiating events and other failures resulting from the effects of the external hazard that can lead to core damage or large early release. The model is based on the internal events, at-power PRA model to incorporate those aspects that are different—as a result of the external hazard's effects—from the corresponding aspects of the at-power, internal events model.

The specific analyses performed during this step will be directly dependent on the specific external hazards were not screened out from further consideration in Step 2. Table 13-10 discusses the documentation needs for this step of the subtask.

Table 3-10 Documentation Needs for Step 3 of Subtask 2-1.3

Item	Description
External Hazard Analysis	The analysis and documentation of the external hazard analysis shall be consistent with the supporting requirements in the XHA technical element in the ASME/ANS Level 1/LERF PRA standard.
External Hazard Fragility Evaluation	The analysis and documentation of the external hazard fragility evaluation shall be consistent with the supporting requirements in the XFR technical element in the ASME/ANS Level 1/LERF PRA standard.
External Hazard Plant Response Model	The development and documentation of the external hazard plant response model shall be consistent with the supporting requirements in the XPR technical element in the ASME/ANS Level 1/LERF PRA standard.

13.1.4.4 <u>Documentation</u>

The products produced as a result of the subtask are identified below. These products (along with the identified inputs, Section 13.1.4.3) should be sufficient such that it allows an independent analyst to understand how the analysis was performed and to reproduce the results. Consequently, the list of products should include both interim and final products. Table 13-11 provides, at a minimum, the expected products from this subtask.

Table 3-11 Expected Products from Subtask 2-1.3

Product	Description
Step 1: Review of plant specific external hazard data and licensing bases	
Site Documentation Review (Final product)	The report summarizes the results of the site documentation review including a catalog of any changes to the operating license post-issuance and a general synopsis of the licensee's analyses of other external hazards.
Step 2: Screening analyses	
Screening Analysis Report (Final product)	This report details the qualitative and quantitative screening analyses of external hazards listed in Appendix 6-A of the PRA standard and will be consistent with the supporting requirements in Part 6 of the ASME/ANS Level 1/LERF PRA standard.
Step 3: Modeling of unscreened external hazards	
Other External Hazards, Fragility, and Plant Response Analysis Report (Final Product)	This report details the analysis of the unscreened external hazards, the plant fragility analysis, and the plant response analysis. This report is to be consistent with the documentation supporting requirements of high level requirement XHA, XFR, and XPR, respectively, in Part 9 of the ASME/ANS Level 1/LERF PRA standard.

13.1.4.5 Task Interfaces

The various technical steps of the at-power, Level 1 reactor PRA for other external hazards are dependent on other technical elements for information in order for the step to be completed. These interfaces are as follows:

- Step 3 requires that the at-power Level 1 reactor PRA model for internal hazards be nearly complete, if not fully complete. This is considered to be a significant interface.

Various tasks from other technical elements are dependent on products from this technical element. These interfaces are as follows:

- The completion of the at-power, Level 1 reactor PRA for internal and external hazards is dependent on the completion of this subtask

13.1.4.6 References

1. ASME/ANS RA-Sa-2009, "Standard for Level 1/Large Early Release Frequency Probabilistic Risk Assessment for Nuclear Power Plant Applications," Addendum A to RA-S-2008, ASME, New York, NY, American Nuclear Society, La Grange Park, Illinois, February 2009.

2. NUREG-1407, "Procedural and Submittal Guidance for the Individual Plant Examination of External Events (IPEEE) for Severe Accident Vulnerabilities," U. S. Nuclear Regulatory Commission, Washington, DC, June 1991.
3. NUREG-1855 Revision 1 Draft, "Guidance on the Treatment of Uncertainties Associated with PRAs in Risk-Informed Decisionmaking," U. S. Nuclear Regulatory Commission, Washington, DC, May 2012.
4. Interim Staff Guidance Document on Uncertainties that is currently under development.

13.2 Task 2-2: Level 2 Reactor PRA, At-Power for External Hazards

The purpose of this section is to describe the relationship between the reactor Level 2 PRA at-power internal hazards and the reactor Level 2 PRA at-power external hazards. A detailed technical approach plan for the reactor Level 2 PRA at-power external hazards will be developed later.

Assumptions:

- All (applicable) assumptions for the at-power internal hazards Level 2 PRA apply here.
- The inclusion of other hazards will not represent a step increase in the amount of effort in Level 2 space (i.e., other hazards are an add-on to the internal hazards model).
- The finite element analysis will be able to use the GMRS constructed for the Level 1, in conjunction with a source/structure interaction assessment.

Analysis Steps:

The table below shows how the analysis steps from the internal hazards Level 2 PRA map to those of the external hazards Level 2 PRA:

Technical Element (Subtask)	Analysis Step	External Hazards Analogy
Level 1/2 PRA Interface – Accident Sequence Grouping	Step 1 – Development of extended Level 1 event trees	Extensions of any new event tress need to be developed, and others checked for continued applicability
	Step 2 – Development of plant damage state binning	Any new PDS need to be developed, and others checked for continued applicability
	Step 3 – Review the resulting plant damage states to ensure dependencies and other information have been adequately transferred	Analogous
	Step 4 – Iteration on the Level 1 PRA modeling as necessary	Analogous
	Step 5 – Criteria for, and selection of, representative sequences	Any new representative sequences need to be developed, and others checked for continued applicability
Containment Capacity Analysis	Step 1 – Assess preliminary failure modes and locations of interest	N/A
	Step 2 – Development of a finite element model of the containment	N/A

	Step 3 – Development of containment fragilities associated with severe accident conditions	Application of model for developing containment fragilities from external hazards.
	Step 4 – Structural responses to severe accident conditions in adjoining buildings	External hazard fragilities for the auxiliary building, and any other SSCs of relevance not covered by the Level 1 PRA fragility analysis. Soil liquefaction effects and seismically-induced containment penetration failures if not covered by the Level 1 PRA.
Severe Accident Progression Analysis	Step 1 – SCALE analysis for decay heat and radionuclide inventory parameters	N/A (no new analysis needed)
	Step 2 – Development of a plant-specific MELCOR model	N/A (no new analysis needed)
	Step 3 – Accident progression modeling for the representative Level 2 sequences to guide logic model development	MELCOR analysis to address new, or revised, representative sequences/event tree modeling.
	Step 4 – Phenomenological evaluations for split fraction assignment and logic model construction	MELCOR analysis to support changes to the Level 2 logic model (support trees/split fractions).
	Step 5 – Evaluation of the impact of post-core damage recovery actions	MELCOR analysis to address new, or revised, sequences
	Step 6 – Evaluation of equipment survivability.	Only addressing those SSCs of relevance not covered by Step 4 of the Containment Capacity Analysis or the Level 1 PRA fragility analysis.
Probabilistic Treatment of Accident Progression and Source Terms	Step 1 – Data analysis for components/systems not considered in the Level 1 PRA	N/A (no new analysis needed)
	Step 2 – Construction of accident progression event trees	Modification to existing APET(s) as necessary.
	Step 3 – Development of support trees	Create any new (or make necessary modifications to existing) support trees.
	Step 4 – Human reliability model development	Addressed in separate section.
	Step 5 – Human reliability analysis	Addressed in separate section.
	Step 6 – Level 2 model quantification	Analogous
	Step 7 – Uncertainty characterization.	Analogous
Radiological Source Term Analysis	Step 1 – Definition of the release category binning logic	Inspect to make sure existing binning logic holds.
	Step 2 – Development of source terms for the various release categories	Analogous
	Step 3 – Consideration of uncertainties in the source term development	Analogous
Evaluation and Presentation of Results	Step 1 – Consolidation of the interim Level 2 PRA model documentation	Analogous
	Step 2 – Consolidation of the final Level 2 PRA model documentation	Analogous

DRAFT

Level 2/3 PRA Interface	Step 1 – Consolidation of the release category information in a format conducive for use by the Level 3 PRA analysts	Analogous

13.3 Task 2-3: Level 3 Reactor PRA, At-Power for External Hazards

[TO BE COMPLETED]

DRAFT

14. Technical Approach for Reactor, Low Power and Shutdown, All Hazards PRA

14.1 Task 3-1: Level 1 Reactor PRA, Low Power and Shutdown for All Hazards

14.1.1 Subtask 3-1.1: Level 1 Reactor PRA for Low Power and Shutdown and Internal Events

The Level 1 reactor PRA for Low Power and Shutdown (LPSD) and Internal Events Analysis consists of nine interrelated steps:

1. Plant Operating State Analysis
2. Initiating Event Analysis
3. Accident Sequence Analysis
4. Success Criteria Analysis
5. Systems Analysis
6. Human Reliability Analysis
7. Data Analysis
8. Modeling and Quantification of LPSD Internal Event Scenarios
9. Document the analysis

The objectives of these steps are to:

1. Determine which Plant Operating States (POSs) are to be modeled.
2. Determine which initiating events are to be modeled and estimate initiating event frequencies.
3. Identify significant operator actions, mitigating systems, and phenomena that can impact the accident sequences.
4. Define success criteria for critical safety functions, supporting systems, structures, components, operator actions, and sequence end states.
5. Identify and quantify the causes of failure for each plant system represented in the model.
6. Ensure that the impacts of plant personnel actions are reflected in the assessment of risk for each POS.
7. Provide estimates of the parameters used to determine probabilities of basic events in the model.
8. Incorporate the LPSD accident scenarios into the SPAR model and quantify the results to estimate their contribution to core damage frequency.
9. Document the LPSD model and results.

14.1.1.1 Assumptions and Limitations

The following are a list of assumptions and limitations that define the scope and level of detail performed for this task.

- The Level 1 PRA model for Low Power, Shutdown and Internal Events will be limited to a select number of POSs and initiating event accident scenarios. In principle, each POS could be modeled in similar detail and scope to the at-power, internal events model. A

model of this size would likely become unwieldy. Some practical scope limitations must be applied to the model while maintaining adequate characterization of the significant risk contributors for LPSD evolutions. It is assumed that the project manager and project technical advisors will agree to an appropriate scope for the LPSD model before significant work on the model begins.

- To begin work on the LPSD model it is assumed that a stable version of the Level 1 PRA model for at-power and internal events will be available. The LPSD accident scenarios will depend on parts (e.g., event trees, fault trees, and basic events) of the at-power internal events model. Any changes to the internal events model may impact the LPSD accident scenarios.

14.1.1.2 Inputs

The design, maintenance and operational information required in order to perform the associated steps of Internal Flood Analysis are identified. This information (along with the identified products, Section 14.1.1.2) should allow an independent analyst to reproduce the various results. The information needed to perform each step, at a minimum, is listed below in Table 14-1.

Table 14-1 Needed Inputs for Subtask 3-1.1

Input	Description
Steps 1, 2, 7: Define LPSD Model Scope and Data Analysis	
Vogtle LPSD Operating Experience	Plant specific operating experience will be used to determine the appropriate scope for the model (e.g., POSs, residence times, and initiating events). If plant specific operating experience is not available or insufficient, then the analysis will be supplemented by industry-wide operating experience and analysts' judgment.
Steps 3 – 6: Accident Sequence, Success Criteria, System, and Human Reliability Analyses	
LPSD Supporting Calculations and Data	Plant specific calculations and data, which may include water volumes, pump curves, and thermal hydraulic analysis, will be used to support development of accident sequences, success criteria, and timing for operator actions. If supporting calculations and data are not available or insufficient, then the analysis will be supplemented by applicable calculations/data from other plants and analysts' judgment.
Steps 3 and 6: Accident Sequence Analysis and HRA	
Vogtle Procedures Applicable to LPSD Operations	The operating procedures used by Vogtle plant staff to perform LPSD evolutions and respond to off-normal LPSD conditions will be used to develop accident sequences and evaluate operator actions.

14.1.1.3 Analysis Steps

Internal Flood Analysis consists of nine interrelated steps:

Step 1 – Plant Operating State Analysis

The objectives of this step are:

- To review available plant specific LPSD operating experience.
- To determine the poss to be modeled.
- To define the poss in sufficient detail to support accident scenario development.

The staff will review the Vogtle LPSD operating history to determine the appropriate POSs to include in the model. The staff will determine which LPSD evolutions are performed, POSs entered, residence times in those POSs, and plant configuration in those POSs. The staff will impose practical limitations on the size and scope of the model. The model may not include all LPSD evolutions and POSs that are identified for Vogtle. In addition to reviewing Vogtle LPSD operating history, the staff will consider industry-wide LPSD operating experience and analysts' judgment to determine the POSs to be modeled. The staff will consult with experienced staff in NRR and NRO to make this determination.

The following table provides a list of items that need to be documented for this step.

Table 14-2 Documentation Needs for Step 1 of Subtask 3-1.1

Item	Description
POS Analysis	Summary of the POSs selected for the LPSD model

Step 2 – Initiating Event Analysis

The objectives of this step are:

- Determine which initiating events are to be modeled.
- To estimate initiating event frequencies.

The staff will review plant specific and industry operating experience to determine which initiating events should be modeled in the LPSD model. The staff has experience developing shutdown SPAR models and will refer to the "SPAR-SD Model Maker's Guideline (MMG)" report for guidance in determining which initiating events to model.

The initiating event frequencies will generally be taken from the following references:

- NUREG/CR-6928, "Industry-Average Performance for Components and Initiating Events at U.S. Commercial Nuclear Power Plants."
- EPRI Technical Report 1003113, "An Analysis of Loss of Decay Heat Removal Trends and Initiating Event Frequencies (1989-2000)."

The staff will review more recent LPSD operating experience to determine if updated frequencies are needed. The staff will consult the EPRI Technical Report 1021176 "An Analysis of Loss of Decay Heat Removal and Loss of Inventory Event Trends (1990-2009)." This report

summarizes more recent occurrences of LPSD events, but it does not include estimates of initiating event frequencies. The staff may perform some limited data analysis to update initiating event frequencies to the extent that it is deemed necessary.

The following table provides a list of items that need to be documented for this step.

Table 14-3 Documentation Needs for Step 2 of Subtask 3-1.1

Item	Description
LPSD Initiating Event Analysis	Summary of the initiating events to be modeled and estimates of initiating event frequencies.

Step 3 – Accident Sequence Analysis

The objectives of this step are:

- To identify significant operator actions, mitigating systems, and phenomena that can impact the accident sequences.
- To develop the accident scenarios that will be modeled in the lpsd spar model.

After reviewing the Vogtle plant procedures, the staff will define the LPSD accident scenarios to be modeled in the SPAR model for this project. The staff will identify significant operator actions, mitigating systems, and phenomena that can impact the accident sequences. The staff has experience with developing shutdown accident scenarios for the existing SPAR shutdown models. A similar approach will be taken in developing this model.

The following table provides a list of items that need to be documented for this step.

Table 14-4 Documentation Needs for Step 3 of Subtask 3-1.1

Item	Description
Accident Sequence Analysis	Document the accident sequence analysis and define the accident scenarios to be included in the model.

Step 4 – Success Criteria Analysis

The objective of this step is:

- To define success criteria for critical safety functions, supporting systems, structures, components, operator actions, and sequence end states.

The staff will review the Vogtle plant procedures and any available supplemental information to determine the success criteria for critical safety functions, operator actions, and sequence end states. The supplemental information may include supporting calculations, plant data (e.g., water volumes, pump curves), interviews with Vogtle operations staff, and plant walkdowns. The LPSD supporting systems, structures and components (SSCs) are expected to be modeled as part of the Level 1, at-power model. It is assumed that the at-power success criteria for these supporting SSCs will be applicable to LPSD conditions.

Some areas that may require special consideration for LPSD conditions include:

- Decay heat generation: If available, the analysis will use a plant specific shutdown power correlation for each modeled POS. If this information is not provided by Vogtle, then a generic decay heat correlation will be used.

- Mission time: In general, a 24-hour mission time will be used. For some sequences a longer mission time may be required to reach a stable end state. In those cases where the definition of mission time can have a significant impact on the results, the staff will adjust the model to use a different mission time.

- Core damage definition and plant parameters used to determine core damage: The typical core damage plant parameters used in at-power PRA are not necessarily applicable during shutdown conditions. The staff will determine an appropriate definition and associated plant parameters for the core damage end state at LPSD conditions.

To develop the LPSD success criteria, the staff will primarily rely on plant specific information provided by Vogtle and other available generic studies that may be applicable. If necessary and resources are available, the staff may use in-house or contractor support to perform thermal hydraulic calculations to develop and verify LPSD success criteria.

The following table provides a list of items that need to be documented for this step.

Table 14-5 Documentation Needs for Step 4 of Subtask 3-1.1

Item	Description
Success Criteria Analysis	Document the success criteria for critical safety functions, supporting systems, structures, components, operator actions, and sequence end states.

Step 5 – Systems Analysis

The objectives of this step are:

- To identify and quantify the causes of failure for each plant system represented in the model.

The LPSD model will generally use the systems models that were developed for the Level 1 at-power model. The staff will review the system models to ensure that they are sufficient for LPSD conditions. Some modifications to the system models may be necessary, but these modifications are expected to be minor.

The following table provides a list of items that need to be documented for this step.

Table 14-6 Documentation Needs for Step 5 of Subtask 3-1.1

Item	Description
Systems Analysis	The documentation will identify the system models used in the LPSD model and any modifications to the modeling needed for LPSD conditions. The Level 1 at-power model documentation will provide the detailed systems analysis

Item	Description
	documentation.

Step 6 – Human Reliability Analysis

The objectives of this step are:

- To ensure that the impacts of plant personnel actions are reflected in the assessment of risk for each POS.

For the most part, the scope and assumptions for the overall LPSD PRA address the first two steps in the human reliability analysis (HRA) process described in Section 7. To support the LPSD model, the remaining seven HRA process steps identified in Section 7 will be performed.

1. Qualitative analysis (i.e., information collection & interpretation, analysis to support quantification)
2. Identification and definition of human failure events (HFEs)
3. Quantification (both screening and detailed)
4. Recovery analysis
5. Dependence analysis
6. Uncertainty analysis
7. Documentation

The staff will review Vogtle procedures and supporting calculations and information to support the HRA. Also, to the extent relevant, NRC's HRA Good Practices report (NUREG-1792), NRC's Evaluation of HRA Methods Against Good Practices (NUREG-1842), and other PRA guidance will be used.

Other resources that are expected to be used include:

- previously performed HRA/PRA LPSD studies (e.g., NUREG-6144 and -6145),
- HRA research on human performance issues relevant to LPSD (e.g., NUREG/CR-6093, NUREG/CR-6265),
- guidance on performing qualitative analysis (e.g., NUREG-1921, NUREG-1624, Rev. 1, NUREG-1880), and
- guidance on identifying and defining human failure events (HFEs) (e.g., NUREG-1921, NUREG-1624, Rev. 1).

Per guidance provided in NUREG-1842, the HRA quantification method(s) will be selected by finding the best match between the results of HRA qualitative analysis and characteristics of existing quantification methods developed for detailed HRA (as defined by the ASME/ANS PRA Standard). However, it is expected that the HRA quantification needs for LPSD will require additional development or extension of existing HRA methods to address LPSD-specific considerations. These include: developing a cut-off value for multiple HFEs, addressing weak dependencies between HFEs, and treating long time windows for actions to occur. If necessary and resources are available, the staff may use in-house and/or contractor support to perform HRA and/or perform thermal hydraulic calculations to develop the time windows for human actions to occur.

The following table provides a list of items that need to be documented for this step.

Table 14-7 Documentation Needs for Step 6 of Subtask 3-1.1

Item	Description
Human Reliability Analysis	The steps of the HRA process including the results of quantified HFEs will be documented.

Step 7 – Data Analysis

The objective of this step is:

- To provide estimates of the parameters used to determine probabilities of basic events in the model.

The LPSD model will generally use the data analysis that was developed for the Level 1 at-power model. The staff will review the data analysis to ensure that it is sufficient for LPSD conditions. Some areas that may require special consideration include:

- Estimating failure probabilities for failures on demand: It is expected that failures on demand will be modeled for some LPSD initiating events (e.g., overdrain events). These will be addressed in the initiating event analysis.

- Unavailability due to test or maintenance (T&M):
  - For most SSCs represented in the LPSD model, the at-power models (fault trees, basic events) will be used. Unless there is sufficient justification to use a different unavailability value, then the at-power T&M unavailabilities will be used.
  - For equipment that is critical to LPSD safety functions (e.g., residual heat removal pumps, emergency diesel generators) the T&M unavailability will be reviewed to determine if an alternate value is needed. Test and maintenance records provided by Vogtle will be used to support this determination
  - If plant specific Technical Specifications allow for certain critical equipment to be unavailable in a POS, then that equipment may be assumed to be unavailable for the entire duration of the POS. For example, If Technical Specifications requires only one of two residual heat removal (RHR) trains to be available during Mode 6 Refueling, then one RHR train can be assumed to be unavailable for the entire duration of the POS. Assumptions about equipment availability will be documented as part of the POS analysis (Step 1).

- Most at-power PRA models do not credit the recovery of RHR pumps. Due to their importance to safety functions during LPSD operations, recovery of RHR pumps may be credited in the LPSD model. The staff will need to develop RHR pump recovery curves to support this analysis.

The following table provides a list of items that need to be documented for this step.

Table 14-8 Documentation Needs for Step 7 of Subtask 3-1.1

Item	Description
Data Analysis	Most of the data analysis will be taken directly from the Level 1, at-power model. The report will document any areas that

Item	Description
	require special consideration for LPSD conditions.

Step 8 – Modeling and Quantification of LPSD Internal Event Scenarios

The objectives of this step are:

- To incorporate the LPSD accident scenarios into the SPAR model.
- To quantify the results to estimate their contribution to core damage frequency.

The LPSD scenarios are to be incorporated into the Level 1, at-power, internal events model. This task will include creating the event trees, fault trees, linking and post-processing rules, and basic events that are needed to model the scenarios. The INL staff will perform this work and ensure that the LPSD scenarios are consistent with the general SPAR modeling approach. A stable version of the Level 1, at-power, internal events model must be available to complete this step. The LPSD scenarios will depend on parts (e.g., event trees, fault trees, and basic events) of the at-power model. Any changes to the at-power model may impact the LPSD scenarios. The staff will review the LPSD SPAR model and results.

The following table provides a list of items that need to be documented for this step.

Table 14-9 Documentation Needs for Step 8 of Subtask 3-1.1

Item	Description
LPSD Modeling Details	The report will document the LPSD modeling details (e.g., linking and post-processing rules) that need to be captured after completing the model.

Step 9 – Document the LPSD Analysis

The objectives of this step are:

- To summarize the information that has been reviewed.
- To document the modeling assumptions and analysis steps.
- To report results and insights from the internal flood PRA.

After completion of the LPSD PRA model, the staff will document the work that has been performed. The documentation will include a summary of all the information that the staff reviewed and assessed. The final documentation will incorporate all the information that was documented in the previous steps.

The following table provides a list of items that need to be documented for this step.

Table 14-10 Documentation Needs for Step 9 of Subtask 3-1.1

Item	Description
Level 1 PRA for Low Power Shutdown and Internal Events Final Report	The report will incorporate the work completed under the previous steps, including technical bases for all assumptions and decisions, and summarize the results and insights from the LPSD PRA.

14.1.1.4 Documentation

The products produced as a result of the task are identified below. These products (along with the identified inputs, Section 14.1.1.2) should be sufficient such that it allows an independent analyst to understand how the analysis was performed and to reproduce the results. Consequently, the list of products include both interim and final products. Table 14-11 provides, at a minimum, the expected products.

Table 14-11 Expected Products for Subtask 3-1.1

Product	Description
Steps 1 – 7: Define Scope and LPSD Analysis	
Level 1 PRA for Low Power, Shutdown and Internal Events Interim Report	The report will define the scope of the LPSD internal events model and document modeling assumptions. The LPSD internal event scenarios will be defined in sufficient detail to allow INL to create the model in step 8.
Step 8: Modeling and quantification of LPSD internal event scenarios	
LPSD Internal Events SPAR Model	The LPSD internal event scenarios will be incorporated into the SPAR model. This will include all necessary event trees, fault trees, post-processing rules, etc.
Step 9: Document the analysis	
Level 1 PRA for Low Power, Shutdown and Internal Events Final Report	The report will incorporate the work completed under the previous steps and summarize the results and insights from the LPSD PRA.

14.1.1.5 Task Interfaces

The various technical steps of the Internal Flood Analysis are dependent on other technical elements for information in order for the step to be completed. These interfaces are as follows:

- Step 8 requires a final version of the internal events, at-power model which is a product of the Level 1 for At-Power and Internal Events Analysis.

A final version of the Level 1 for At-Power and Internal Events SPAR model is needed before the LPSD scenarios can be incorporated into the model. Any changes to the at-power model may impact the LPSD scenarios. In order to efficiently complete this task, the at-power model should be stable and complete before the LPSD scenarios are incorporated into the model.

Various tasks from other technical elements are dependent on products from this technical element. These interfaces are as follows:

- Step 4 results in the LPSD SPAR model, which is information required by the Level 2 Reactor PRA, Low Power Shutdown for Internal Events.

The work on the Level 2 LPSD model will depend on having a completed Level 1 LPSD model.

14.1.1.6 References

A list of references that can and should be used in performing the work of the technical element is provided.

1. NRC staff report “SPAR-SD Model Maker’s Guideline (MMG),” Revision 2.2, ADAMS Accession Number ML092160242.
2. Draft ANSI/ANS-58.22-2012, “American National Standard Low power and Shutdown PRA Methodology.”
3. EPRI Technical Report 1003113, “An Analysis of Loss of Decay Heat Removal Trends and Initiating Event Frequencies (1989-2000).”
4. EPRI Technical Report 1021176, “An Analysis of Loss of Decay Heat Removal and Loss of Inventory Event Trends (1990-2009).”
5. EPRI Technical Report 1003465, “Low Power and Shutdown Risk Assessment Benchmarking Study.”
6. NUREG-1449, “Shutdown and Low-Power Operation at Commercial Nuclear Power Plants in the United States.”
7. NUREG/CR-6143, “Evaluation of Potential Severe Accidents During Low Power and Shutdown Operations at Grand Gulf, Unit 1.”
8. NUREG/CR-6144, “Evaluation of Potential Severe Accidents During Low Power and Shutdown Operations at Surry, Unit 1.”
9. NUREG/CR-6928, “Industry-Average Performance for Components and Initiating Events at U.S. Commercial Nuclear Power Plants.”

DRAFT

14.1.2 Subtask 3-1.2: Level 1 Reactor PRA for Low Power and Shutdown and Internal Floods

The LPSD Internal Flood Analysis consists of four interrelated steps:

- Review the internal flood analysis for at-power conditions
- Define the LPSD internal flood scenarios
- Model the LPSD internal flood scenarios
- Document the analysis

The objective of the first step is to review the Internal Flood Analysis information that was used to develop the at-power internal flood SPAR model for this project and identify the internal flood scenarios that are applicable to LPSD conditions. The objective of the second step is to define the set of internal flood scenarios to be modeled in the internal flood LPSD SPAR model. The objective of the third step is to create the internal flood LPSD SPAR model. The objective of the fourth step is to summarize the information that has been reviewed and document the analysis.

14.1.2.1 Assumptions and Limitations

The following are a list of assumptions and limitations that define the scope and level of detail performed for this task.

- The Vogtle site has performed a Level 1 PRA for at-power and internal floods. It is assumed that all internal flood technical elements have been addressed as part of this study. The staff does not anticipate that any new internal flood scenarios will need to be introduced to address LPSD conditions. The existing internal flood scenarios will be adjusted to address the plant configurations, equipment unavailabilities, and other unique flood response conditions that are applicable during LPSD operations.

- To begin work on Step1 it is assumed that stable versions of the Level 1 PRA for At-Power and Internal Floods and Level 1 PRA for Low Power Shutdown and Internal Events will be available. The LPSD internal flood scenarios will depend on parts (e.g., event trees, fault trees, and basic events) of the aforementioned model scenarios.

14.1.2.2 Inputs

The design, maintenance and operational information required in order to perform the associated steps of Internal Flood Analysis are identified. This information (along with the identified products, Section 14.1.2.4) should allow an independent analyst to reproduce the various results. The information needed to perform each step, at a minimum, is listed below in Table 14-12.

Table 14-12 Needed Inputs for Subtask 3-1.2

Input	Description
Step 1: Review the Internal Flood Analysis	
Vogtle Internal Flood PRA documentation	The complete documentation of the Vogtle Internal Flood PRA. This includes descriptions of the analyses for all Internal Flood PRA technical elements and any supplemental information that was gathered to develop the at-power

Input	Description
	internal floods SPAR model.
Level 1 PRA for At-Power and Internal Floods SPAR Model	A complete Level 1 PRA for At-Power and Internal Floods SPAR model must be available to begin work on this task.
Level 1 PRA for Low Power Shutdown and Internal Events SPAR Model	A complete Level 1 PRA for Low Power Shutdown and Internal Events SPAR model must be available to begin work on this task.

14.1.2.3 Analysis Steps

LPSD Internal Flood Analysis consists of four interrelated steps:

Step 1 – Review the Internal Flood Analysis

The objectives of this step are:

- To review the analysis done to support the at-power internal flood SPAR model.
- To identify the internal flood scenarios that are applicable to LPSD conditions.

The staff will review the analysis that was completed to develop the at-power internal flood SPAR model for this project. The Vogtle staff has completed an at-power internal flood PRA and addressed all the associated technical elements. This completed work is expected to be sufficient to identify internal flood scenarios that are applicable to LPSD conditions. The staff will identify the scenarios that are applicable to the LPSD POSs that are modeled in the LPSD internal events SPAR model.

The following table provides a list of items that need to be documented for this step.

Table 14-13 Documentation needs for Step 1 of Subtask 3-1.2

Item	Description
Review At-Power Internal Floods Analysis	Summary of internal flood scenarios that are applicable to the modeled LPSD POSs.

Step 2 – Define the LPSD Internal Flood Scenarios

The objectives of this step are:

- To define the set of internal flood scenarios to be modeled in the Level 1, low power shutdown SPAR model.

After reviewing the at-power internal flood scenarios, the staff will define the internal flood scenarios to be modeled in the LPSD model. The staff will give special consideration to the unique LPSD operating conditions that can impact the plant response to internal flood events. Conditions requiring special consideration may include:

- Temporary impairment of flood doors/barriers.

- Maintenance-induced floods.
- Disabling of automatic plant response.
- Equipment unavailabilities.

Internal flood scenarios will include relevant human failure events, following the general guidance provided in Section 7 and supplemented by additional resources and HRA guidance documents (e.g., NUREG/CR-6093, NUREG/CR-6265, NUREG-1921).
The following table provides a list of items that need to be documented for this step.

Table 14-14 Documentation Needs for Step 2 of Subtask 3-1.2

Item	Description
LPSD Internal Flood Scenario Definitions	Definition of the LPSD internal flood scenarios to be modeled in the SPAR model.

Step 3 – Model the LPSD Internal Flood Scenarios

The objectives of this step are:

- To incorporate the set of internal flood scenarios into the low power shutdown internal events SPAR model.

The internal flood scenarios defined in Step 2 are to be incorporated into the Level 1, low power shutdown internal events SPAR model. This task will include creating the event trees, fault trees, linking and post-processing rules, and basic events that are needed to model the scenarios. The INL staff will perform this work and ensure that the internal flood scenarios are consistent with the general SPAR modeling approach. Stable versions of the Level 1, at-power, internal floods model and the Level 1, low power shutdown internal events model must be available to complete this step.

The following table provides a list of items that need to be documented for this step.

Table 14-15 Documentation Needs for Step 3 of Subtask 3-1.2

Item	Description
Additional Modeling Details	The LPSD internal flood scenarios will be documented in Step 2, but there may be additional modeling details (e.g., linking and post-processing rules) that need to be captured after completing the model.

DRAFT

Step 4 – Document the LPSD Internal Flood Analysis

The objectives of this step are:

- To summarize the information that has been reviewed.
- To document the modeling assumptions and analysis steps.
- To report results and insights from the internal flood PRA.

After completion of the LPSD internal flood SPAR model, the staff will document the work that has been performed. The documentation will include a summary of all the information that the staff reviewed and assessed, descriptions of the LPSD internal flood scenarios that have been incorporated into the model, and discussion of the results and insights from the model. The final documentation will incorporate all the information that was documented in the previous steps.

The following table provides a list of items that need to be documented for this step.

Table 14-16 Documentation Needs for Step 4 of Subtask 3-1.2

Item	Description
Level 1 PRA for Low Power, Shutdown and Internal Floods Final Report	The report will incorporate the work completed under the previous steps and summarize the results and insights from the LPSD internal flood PRA.

14.1.2.4 Documentation

The products produced as a result of the task are identified below. These products (along with the identified inputs, Section 14.1.2.2) should be sufficient such that it allows an independent analyst to understand how the analysis was performed and to reproduce the results. Consequently, the list of products include both interim and final products. Table 14-17 provides, at a minimum, the expected products.

DRAFT

Table 14-17 Expected Products for Subtask 3-1.2

Product	Description
Step 1 and 2: Review, identify and define LPSD internal flood scenarios	
LPSD Internal Flood Scenarios Report	The report will summarize internal flood scenarios that are applicable to LPSD conditions and define the model characteristics that are to be incorporated into the SPAR model.
Step 3: Model the internal flood scenarios	
LPSD Internal Flood SPAR Model	The internal flood scenarios will be incorporated into the SPAR model. This will include all necessary event trees, fault trees, post-processing rules, etc.
Step 4: Document the analysis	
Level 1 PRA for Low Power Shutdown and Internal Floods Final Report	The report will incorporate the work completed under the previous steps and summarize the results and insights from the LPSD internal flood PRA.

14.1.2.5 Task Interfaces

The various technical steps of the Internal Flood Analysis are dependent on other technical elements for information in order for the step to be completed. These interfaces are as follows:

- Step 1 requires stable versions of the Level 1 PRA for At-Power and Internal Floods and Level 1 PRA for Low Power Shutdown and Internal Events.

The LPSD internal flood scenarios will depend on parts (e.g., event trees, fault trees, and basic events) of the aforementioned model scenarios.

Various tasks from other technical elements are dependent on products from this technical element. These interfaces are as follows:

- Step 3 results in the LPSD internal flood SPAR model which is information required by the Level 2 Reactor PRA, Low Power, Shutdown for Internal Floods.

The work on the Level 2 LPSD internal floods model will depend on having a completed Level 1 LPSD internal floods model.

14.1.2.6 References

A list of references that can and should be used in performing the work of the technical element is provided.

1. Vogtle documentation for Level 1 PRA for At-Power and Internal Floods.
2. EPRI Report No. 1021086 “Pipe Rupture Frequencies for Internal Flooding PRAs, Revision 2.”
3. NUREG/CR-6928 “Industry-Average Performance for Components and Initiating Events at U.S. Commercial Nuclear Power Plants.”
4. NRC staff report “SPAR-SD Model Maker’s Guideline (MMG),” Revision 2.2, ADAMS Accession Number ML092160242.

5. Draft ANSI/ANS-58.22-2012, "American National Standard Low power and Shutdown PRA Methodology."
6. EPRI Technical Report 1003113, "An Analysis of Loss of Decay Heat Removal Trends and Initiating Event Frequencies (1989-2000)."
7. EPRI Technical Report 1021176, "An Analysis of Loss of Decay Heat Removal and Loss of Inventory Event Trends (1990-2009)."
8. EPRI Technical Report 1003465, "Low Power and Shutdown Risk Assessment Benchmarking Study."
9. NUREG-1449, "Shutdown and Low-Power Operation at Commercial Nuclear Power Plants in the United States."
10. NUREG/CR-6143, "Evaluation of Potential Severe Accidents During Low Power and Shutdown Operations at Grand Gulf, Unit 1."
11. NUREG/CR-6144, "Evaluation of Potential Severe Accidents During Low Power and Shutdown Operations at Surry, Unit 1."
12. NUREG/CR-6928, "Industry-Average Performance for Components and Initiating Events at U.S. Commercial Nuclear Power Plants."

14.1.3 Subtask 3-1.3: Level 1 Reactor PRA for Low Power and Shutdown and Internal Fires

[TO BE COMPLETED]

14.1.4 Subtask 3-1.4: Level 1 Reactor PRA for Low Power and Shutdown and Seismic Events, High Winds, and External Floods

[TO BE COMPLETED]

14.1.5 Subtask 3-1.5: Level 1 Reactor PRA for Low Power and Shutdown and Other External Hazards

The Level 1 Reactor PRA analysis of other external hazards for low power and shutdown modes of operation is to be performed to estimate the risk from site-specific external hazards other than seismic hazards. This risk will be characterized by calculating the plant CDF (Level 1 analysis), if possible; otherwise by a qualitative characterization will be performed. Parts 6 and 9 of the March 2012, draft ANSI/ANS Low Power and Shutdown (LPSD) PRA standard provide technical requirements related to the performance of this subtask which largely reference back to the analogous technical requirements in Parts 6 and 9 of the ASME/ANS Level 1/LERF PRA standard.

This analysis consists of the following three interrelated steps.

- Review of plant specific hazard data and licensing bases
  The objective of this step is to become familiar with and asses the existing licensee analyses of other external hazards and any existing LPSD PRA model for the subject plant site.

- Screening analyses
  The objective of this step is to determine whether a particular external hazard can be eliminated from further consideration in the SPAR Level 1 PRA model for the subject plant. This step consists of either qualitative or quantitative screening, or a combination

of both. This analysis will conform to the March 2012, ANSI/ANS LPSD PRA standard technical elements for the screening of other external hazards (LEXT).

- Modeling of unscreened external hazards
  The objective of this step is to model any unscreened external hazards from the previous step into the existing SPAR Level 1 PRA model for the subject plant. This modeling will conform to the March 2012, ANSI/ANS LPSD PRA standard technical elements for other external hazards analysis (LXHA), external hazards fragility analysis (LXFR), and external hazard plant response modeling (LXPR).

14.1.5.1 Assumptions and Limitations

The following are a list of assumptions and limitations that define the scope and level of detail performed for this task.

- The analysis may be qualitative, quantitative, or a combination of each, as is warranted by the site-specific hazard characteristics. It is assumed that the external hazards under consideration will consist of the external hazards listed in Appendix 6-A of the ASME/ANS RA-Sa-2009 PRA standard, as referenced in the March 2012, ANSI/ANS LPSD PRA standard.

- The level of detail of modeling and analysis will be in accordance with the limited resources allocated to this task. See below for resource estimates.

- It is assumed that documentation for plant systems etc. have already been obtained from the licensee and are available and for review and use as reference.

- It is assumed that a carefully selected vendor who is competent and has experience in this area will be available; with previous experience for creating similar models with limited resources.

- It is assumed that the low power and shutdown Level 1 reactor PRA for internal hazards has been completed or is nearly complete and that this subtask will be performed in parallel with the at-power Level 1 reactor PRA for other external hazards.

14.1.5.2 Inputs

The design, maintenance and operational information required in order to perform the associated steps of the Level 1 low power and shutdown reactor PRA for other external hazards analysis are identified. This information (along with the identified products, Section 14.1.4.4) should allow an independent analyst to reproduce the various results. The information needed to perform each step, at a minimum, is listed below in Table 14-18.

Table 14-18 Needed Inputs for Subtask 3-1.5

Input	Description
Step 1: Review of plant specific external hazard data and licensing bases	
Plant design information	This input may consist of the subject plant FSAR, engineering drawings, Operating License, etc. This information will be needed to starting this step.

Input	Description
Licensee PRA information	Licensee PRA documentation, peer review findings, , the licensee's Level 1 LPSD PRA model for other external hazards, if available, etc.. This information will be needed prior to starting this step.
Step 2: Screening analysis	
Plant walkdowns	Plant walkdowns may be performed after the screening analyses are complete, as needed, to assess the validity of the assumptions used in the qualitative and quantitative screening analyses. Depending on whether an external hazard is screened qualitatively or quantitatively, these walkdowns may include locations both inside buildings and around the site. Walkdowns may.
Step 3: Modeling of unscreened external hazards	
Plant walkdowns	Plant walkdowns may be performed at an appropriate time during the modeling of unscreened external hazards, as needed, to assess the validity of the assumptions used in the external hazard analysis, fragility evaluation, and plant response model development. Depending on whether an external hazard is screened qualitatively or quantitatively, these walkdowns may include locations both inside buildings and around the site.

14.1.5.3 Analysis Steps

The Level 1, low power and shutdown reactor PRA for other external hazards analysis consists of three interrelated steps:

1. Review of plant specific external hazard data and licensing bases
2. Screening Analysis
3. Modeling of unscreened external hazards

DRAFT

Step 1 – Review of Plant Specific External Hazard Data and Licensing Bases

The objective of this step is to become familiar with and asses the existing licensee analyses with regard to other external hazards and the existing Level 1 PRA model for the subject plant site.

The review of the subject plant licensing bases and plant specific external hazard data is performed for general familiarization of the plant site and documenting all previous other external hazards analyses. This step includes reviewing licensee PRA documentation as well as for the identification of any significant changes since the operating license (OL) issuance relative to (1) military and industrial facilities within 5 miles of the site, (2) onsite storage or other activities involving hazardous materials, (3) transportation, or (4) developments that could affect the original design conditions. Documentation should include descriptions of significant changes at the subject plant site since the issuance of the OL as well as a list of those analyses already performed with regard to other external hazards.

Table 14-19 Documentation Needs for Step 1 of Subtask 3-1.5

Item	Description
Significant changes to OL since issuance	For a given change to the OL, this documentation should provide a detailed description of the change and why the change was implemented.

Step 2 – Screening Analysis

The objective of this step is to screen out those external hazards which cannot or do not significantly impact site risk and are therefore eligible to be excluded from further consideration in the PRA.

The screening analysis starts with a review of the list of external hazards requiring consideration in Appendix 6-A of the ASME/ANS Level 1/LERF PRA standard, as referenced in the March 2012, draft ANSI/ANS LPSD PRA standard. A progressive screening approach will be used wherein a qualitative screening is performed first followed by a quantitative screening to determine if any external hazards other than seismic hazards can be removed from further consideration. The basis for screening any external hazard may be confirmed through a walkdown of the plant and its surroundings, as needed. Any inconsistencies between the plant walkdowns and the screening analyses assumptions for a given external hazard should be incorporated and the screening analysis should be redone accordingly.

Documentation of these analyses will be performed in a manner that facilitates PRA applications, upgrades, and peer review. The process used to screen each external hazard should be documented so as to describe the approach used for screening, the screening criteria used for each screened external hazard, and any engineering or other analyses performed to support a bounding or demonstrably conservative analysis for screening out an external hazard. Documentation should be consistent with the supporting requirements in the March 2012, draft ANSI/ANS LPSD PRA standard.

Table 14-20 Documentation Needs for Step 2 of Subtask 3-1.5

Item	Description

Item	Description
Qualitative Screening Analysis	An initial qualitative screening is performed to determine if any of the external hazards from the Appendix 6-A list meet any one of the five screening criteria in supporting requirement EXT-B1 of the ASME/ANS Level 1/LERF PRA standard, as referenced in the LEXT technical element in the March 2012, draft ANSI/ANS LPSD PRA standard. A second preliminary screening is performed on the remaining external hazards to determine if the plant's design basis for the event meets the NRC 1975 Standard Review Plan. Documentation should be consistent with HLR-LEXT-E of the March 2012, draft ANSI/ANS LPSD PRA standard.
Quantitative Screening Analysis	A bounding or demonstrably conservative analysis is performed using defined quantitative screening criteria to demonstrate that an external hazard can be removed from further consideration, as per HLR-EXT-C in the ASME/ANS PRA Level 1/LERF standard which is referenced in the LEXT technical element of the March 2012, draft ANSI/ANS LPSD PRA standard. Documentation should be consistent with HLR-LEXT-E of the March 2012, draft ANSI/ANS LPSD PRA standard.
Confirmatory Plant Walkdown Findings	Confirmatory plant walkdowns may be performed, as needed, to determine the validity of the assumptions used in a given screening analysis, as per HLR-EXT-D in the ASME/ANS Level 1/LERF PRA standard which is referenced in the LEXT technical element of the March 2012, draft ANSI/ANS LPSD PRA standard. Documentation should be consistent with HLR-LEXT-E of the March 2012, draft ANSI/ANS LPSD PRA standard.

Step 3 – Modeling of Unscreened External Hazards

The objective of this step is to incorporate models for any unscreened external hazards into the Level 1 reactor PRA for low power and shutdown operation.

In general, the following activities are performed for a given external hazard that was not screened out in Step 2: an external hazard analysis; an external hazard fragility evaluation; and development of an external hazard plant response model. The external hazard analysis involves the evaluation of the frequency of occurrence of different intensities of the external hazard based on a site-specific probabilistic evaluation reflecting recent available data and site-specific information. The external hazard fragility evaluation involves the evaluation of the fragilities of the structures, systems, or components as a function of the intensity of the external hazard using plant-specific, SSC-specific information and an accepted engineering method for evaluating the postulated failure. The development of the external hazard plant response model involves the development of a plant response model that addresses the initiating events and other failures resulting from the effects of the external hazard that can lead to core damage or large early release. The model is based on the internal events, LPSD PRA model to incorporate those aspects that are different—as a result of the external hazard's effects—from the corresponding aspects of the LPSD, internal events model.

The specific analyses performed during this step will be directly dependent on the specific external hazards were not screened out from further consideration in Step 2. Table 14-21 discusses the documentation needs for this step of the subtask.

Table 14-21 Documentation Needs for Step 3 of Subtask 3-1.5

Item	Description
External Hazard Analysis	The analysis and documentation of the external hazard analysis shall be consistent with the supporting requirements in the LXHA technical element in the March 2012, draft ANSI/ANS LPSD PRA standard.
External Hazard Fragility Evaluation	The analysis and documentation of the external hazard fragility evaluation shall be consistent with the supporting requirements in the XFR technical element in the March 2012, draft ANSI/ANS LPSD PRA standard.
External Hazard Plant Response Model	The development and documentation of the external hazard plant response model shall be consistent with the supporting requirements in the XPR technical element in the March 2012, draft ANSI/ANS LPSD PRA standard.

14.1.4.4 Documentation

The products produced as a result of the subtask are identified below. These products (along with the identified inputs, Section 14.1.5.2) should allow an independent analyst to understand how the analysis was performed and to reproduce the results. Consequently, the list of products includes both interim and final products. Table 14-22 provides, at a minimum, the expected products.

DRAFT

Table 14-22 Expected Products for Subtask 3-1.5

Product	Description
Step 1: Review of plant specific hazard data and licensing bases	
Site Documentation Review (Final Product)	The report summarizes the results of the site documentation review including a catalog of any changes to the operating license post-issuance and a general synopsis of the licensee's analyses of other external hazards.
Step 2: Screening analyses	
Screening Analysis Report (Final product)	This report details the qualitative and quantitative screening analyses of external hazards listed in Appendix 6-A of the ASME/ANS Level 1/LERF PRA standard and will be consistent with the supporting requirements in Part 6 of the March 2012, draft ANSI/ANS LPSD PRA standard.
Step 3: Modeling of unscreened external hazards	
Other External Hazards , Fragility, and Plant Response Analysis Report (Final Product)	This report details the analysis of the unscreened external hazards, the plant fragility analysis, and the plant response analysis. This report is to be consistent with the documentation supporting requirements of high level requirement LXHA, LXFR, and LXPR, respectively, in Part 9 of the March 2012, draft ANSI/ANS LPSD PRA standard.

14.1.5.5 Task Interfaces

The various technical steps of the low power and shutdown, Level 1 reactor PRA for other external hazards are dependent on other technical elements for information in order for the step to be completed. These interfaces are as follows:

- Step 3 requires that the at-power Level 1 reactor PRA model for internal hazards be nearly complete, if not fully complete. This is considered to be a significant interface.

Various tasks from other technical elements are dependent on products from this technical element. These interfaces are as follows:

- The completion of the at-power, Level 1 reactor PRA for internal and external hazards is dependent on the completion of this subtask

14.1.5.6 References

1. ANSI/ANS-58.22-2012 [Draft], "American National Standard Low Power and Shutdown PRA Methodology," ANS, La Grange Park, IL, March 2012.
2. ASME/ANS RA-Sa-2009, "Standard for Level 1/Large Early Release Frequency Probabilistic Risk Assessment for Nuclear Power Plant Applications," Addendum A to RA-S-2008, ASME, New York, NY, American Nuclear Society, La Grange Park, Illinois, February 2009.
3. NUREG-1407, "Procedural and Submittal Guidance for the Individual Plant Examination of External Events (IPEEE) for Severe Accident Vulnerabilities," U. S. Nuclear Regulatory Commission, Washington, DC, June 1991.

4. NUREG-1855 Revision 1 Draft, "Guidance on the Treatment of Uncertainties Associated with PRAs in Risk-Informed Decisionmaking," U. S. Nuclear Regulatory Commission, Washington, DC, May 2012.

14.2 Task 3-2: Level 2 Reactor PRA, Low Power and Shutdown for All Hazards

The purpose of this section is to describe the relationship between the reactor Level 2 PRA at-power internal hazards and the reactor Level 2 PRA at-low-power and shutdown for internal and external hazards. A detailed technical approach plan for the reactor Level 2 PRA at-low-power and shutdown for internal and external hazards will be developed later.

Assumptions:

- All (applicable) assumptions for the at-power internal hazards Level 2 PRA apply here.
- The inclusion of other modes will not represent a step increase in the amount of effort in Level 2 space (i.e., other modes are an add-on to the at-power internal hazards model).

Analysis Steps:

The table below shows how the analysis steps from the at-power internal hazards Level 2 PRA map to those of the at-low-power and shutdown for internal and external hazards Level 2 PRA:

Technical Element (Subtask)	Analysis Step	External Hazards Analogy
Level 1/2 PRA Interface – Accident Sequence Grouping	Step 1 – Development of extended Level 1 event trees	Extension of new event tress need to be developed, and others checked for continued applicability
	Step 2 – Development of plant damage state binning	New PDS need to be developed, and others checked for continued applicability
	Step 3 – Review the resulting plant damage states to ensure dependencies and other information have been adequately transferred	Analogous
	Step 4 – Iteration on the Level 1 PRA modeling as necessary	Analogous
	Step 5 – Criteria for, and selection of, representative sequences	New representative sequences need to be developed, and others checked for continued applicability
Containment Capacity Analysis	Step 1 – Assess preliminary failure modes and locations of interest	Perform containment isolation at shutdown analysis.
	Step 2 – Development of a finite element model of the containment	N/A
	Step 3 – Development of containment fragilities associated with severe accident conditions	N/A
	Step 4 – Application of engineering	N/A

	information to assess structural responses to severe accident conditions in the auxiliary building	
Severe Accident Progression Analysis	Step 1 – SCALE analysis for decay heat and radionuclide inventory parameters	SCALE analysis for decay heat levels for various times following reactor shutdown.
	Step 2 – Development of a plant-specific MELCOR model	Revise MELCOR model to address unique shutdown considerations (e.g., cold component volumes, different PORV operation, different leak paths, etc.)
	Step 3 – Accident progression modeling for the representative Level 2 sequences	MELCOR analysis to address new, or revised, representative sequences/event tree modeling.
	Step 4 – Phenomenological evaluations for split fraction assignment and logic model construction	MELCOR analysis to support changes to the Level 2 logic model (support trees/split fractions).
	Step 5 – Evaluation of the impact of post-core damage recovery actions	MELCOR analysis to address new, or revised, sequences
	Step 6 – Evaluation of equipment survivability	N/A (no new analysis needed)
Probabilistic Treatment of Accident Progression and Source Terms	Step 1 – Data analysis for components/systems not considered in the Level 1 PRA	N/A (no new analysis needed)
	Step 2 – Construction of accident progression event trees	Modification to existing APET(s) as necessary.
	Step 3 – Development of support trees	Create any new (or make necessary modifications to existing) support trees.
	Step 4 – Human reliability model development	Addressed in separate section.
	Step 5 – Human reliability analysis	Addressed in separate section.
	Step 6 – Level 2 model quantification	Analogous
	Step 7 – Uncertainty characterization.	Analogous
Radiological Source Term Analysis	Step 1 – Definition of the release category binning logic	Inspect to make sure existing binning logic holds.
	Step 2 – Development of source terms for the various release categories	Analogous
	Step 3 – Consideration of uncertainties in the source term development	Analogous
Evaluation and Presentation of Results	Step 1 – Consolidation of the interim Level 2 PRA model documentation	Analogous
	Step 2 – Consolidation of the final Level 2 PRA model documentation	Analogous
Level 2/3 PRA Interface	Step 1 – Consolidation of the release category information in a format conducive for use by the Level 3 PRA analysts	Analogous

DRAFT

14.3 Task 3-3: Level 3 Reactor PRA, Low Power and Shutdown for All Hazards

[TO BE COMPLETED]

DRAFT

15. Technical Approach for Spent Fuel Pool PRA

15.1 Task 4-1: Level 1/2 Spent Fuel Pool PRA

The Spent Fuel Pool (SFP) Level 1/2 PRA analysis (which includes quantification of release frequency and characterization of source terms) consists of eight interrelated subtasks. These subtasks along with their objectives are discussed below.

- Subtask 4-1.1: Initiating event (IE) analysis – The objectives of this subtask are to compile generic IEs that have been identified in past studies and IEs that are unique to this site, and to develop their frequencies. Other objectives are to define a finite set of operating cycle phases (OCPs) by discretizing the phases between the refueling cycle, and focusing on hazards that are judged to have higher risk significance and greater likelihood to cause the selected IEs.

- Subtask 4-1.2: Structural analysis – The objective of this subtask is to develop a finite element model for the SFP to enable the evaluation of impacts on the SFP resulting from structural challenges on the SFP such as seismic events, cask drops, aircraft crash, and missiles.

- Subtask 4-1.3: Accident sequence analysis – The objective of this subtask is to develop Level 1 event trees capturing system performance and key operator actions through the point of anticipated fuel damage, followed by the development of Level 2 accident progression event trees, including the characterization of radionuclide releases to the environment.

- Subtask 4-1.4: Systems analysis – The objective of this subtask is to develop models that can be used to estimate the failure probabilities for the SFP mitigation systems and associated strategies.

- Subtask 4-1.5: Human reliability analysis – The objective of this subtask is to estimate the human error probabilities for evaluating the SFP accident frequencies.

- Subtask 4-1.6: Accident progression and success criteria – The objective of this subtask is to delineate accident sequences, and to determine the minimum required equipment, their capacity, operator actions, and sequence timing associated with each mitigation strategy. In addition, it performs the required severe accident progression analyses to support the development and quantification of the accident progression event trees. This includes the evaluation and confirmation of the binning of accident sequences into appropriate radiological release bins for use in the Level 3 analysis, and the estimation of release characteristics (e.g. radionuclide source terms and associated characteristics).

- Subtask 4-1.7: Quantification – The objective of this subtask is to integrate and quantify the results from the SFP PRA and to estimate the frequency of fuel damage, the frequency of release categories, the source terms associated with each release category and their associated characteristics. Another objective of this subtask is to provide sufficient information to the Level 3 PRA module to perform the final quantification of the various risk metrics.

- Subtask 4-1.8: Uncertainty analysis – The objective of this subtask is to characterize sources of uncertainties and quantify their impact on the risk measures estimated in Subtask 4-1.7.

The technical approach for each of the subtasks is described in this section. These discussions rely on a number of past PRA studies since currently a standard for performance of a SFP PRA is not available.

The scope and boundary of the SFP PRA are defined below.

The demarcation point between the reactor and SFP PRAs will be the physical boundary between the containment and the fuel handling building (i.e., starting at the point where the fuel enters into the fuel transfer tube during refueling). The demarcation point between the SFP and dry cask storage portions is the regulatory boundary between 10 CFR 50, "Domestic Licensing of Production and Utilization Facilities," activities and 10 CFR Part 72, "Licensing Requirements for the Independent Storage of Spent Nuclear Fuel, High-Level Radioactive Waste, and Reactor-Related Greater than Class C Waste," activities (e.g., fuel movement within the pool belongs to the SFP PRA while fuel movement during cask loading belongs to the independent spent fuel storage installation (ISFSI) PRA). There could be special events outside the defined boundaries that have to be modeled in the SFP PRA. For instance a loss-of-coolant accident (LOCA) in the reactor during refueling and a cask drop event modeled in the ISFSI PRA are also potential initiating events for the SFP PRA. These situations will have to be addressed on a case-by-case basis.

There are major differences between the Vogtle Unit 1 and Unit 2 spent fuel pools.[18] Currently, the staff plans to study the Unit 2 SFP (because of its larger inventory of fuel), and to the extent possible, the Unit 1 SFP will be addressed via model duplication and modification. That said, the 2 SFPs are hydraulically connected at times, and may needed to be treated in concert for certain initiating events or operating cycle phases.

The potential for inadvertent criticality due to geometry changes associated with a seismic event, or due to reflooding of the pool after rack materials have relocated, will not be explicitly addressed. Rather, any specific simulations that lead to combinations of conditions where inadvertent criticality would be more likely to occur would be highlighted for potential future analysis. The Office of Nuclear Reactor Regulation has ongoing work with the Center for Nuclear Waste Regulatory Applications which will help to corroborate or challenge this simplifying assumption.

As with the reactor PRA, the SFP PRA does not cover postulated accidents related to security issues such as sabotage or acts of war.

15.1.1 Subtask 4-1.1: Initiating Event Analysis

The Initiating Event Analysis consists of four steps:

- Literature search and external hazard frequencies
- Screening, grouping and hazard discretization

[18] While details of the current pool configurations are still being acquired, we currently understand that the Unit 2 SFP uses high-density racks and has both a greater capacity and actual inventory than the Unit 1 SFP (which uses lower-density racks). We further understand that fuel from the Unit 1 SFP is routinely moved to the Unit 2 SFP after some cooling.

- Initiating event analysis
- Operating cycle discretization

The objective of the first step is to compile initiating events that have been identified in the past studies, identify any initiating events that are unique to this site, and to migrate and apply the external event frequencies from the reactor PRA. The second step aims to screen the events so that effort may be focused on the risk-significant events and to group/discretize the hazards (e.g., divide the seismic hazard into four seismic initiating event bins). The objective of the third step is to develop the initiating event frequencies resulting from both internal and external hazards by adjusting the frequencies estimated for the reactor PRA as necessary to cover the differences between SFPs and the reactors (e.g., a flooding initiating event frequency could be different due to differing elevations of key equipment.) The fourth step will discretize the reactor operating cycle in to a finite set of operating cycle phases (OCPs), akin to the plant operating states in the shutdown PRA.

15.1.1.1 Assumptions and Limitations

- A representative operating cycle will be defined, based on recent plant-specific operating cycle characteristics. The operating cycle will be discretized into quasi-steady operating cycle phases (OCPs), akin to the plant operating states used in reactor shutdown analysis. It is expected that at least 2 OCPs during the outage period and at least 2 during the post-outage period will be defined, to allow sufficient resolution of fuel handling operations and changes in decay heat. The actual number of OCPs to sufficiently cover the major risk contributors will be decided during the PRA evaluation.

- Some hazards will likely screen out during the outage, and many will likely screen out during non-outage portions of the operating cycle (due to the lower heat loads and therefore longer accident progression timelines).

- External hazards will be the same as those identified for the reactor PRA, unless there is reason to believe that a hazard screened out of the reactor PRA should be re-assessed for the SFP (e.g., aircraft crash).

- Low-likelihood events that are fault-tree intensive but unlikely to be contributors to risk (e.g., loss of SFP cooling due to random failures of its support systems during a time with low pool decay heat) will be screened out.

- Generic information (or information from other plants) will be utilized and documented for cases when plant-specific information is not available. For example, generic descriptions/procedures (or descriptions/procedures for another plant) for conduct of operations for cask loading, given the site does not have an ISFSI at this time, may be utilized.

15.1.1.2 Inputs

The design, maintenance and operational information required in order to perform the associated steps of initiating event analysis are identified. The information needed to perform each step is listed in Table 15-1.

Table 15-1 Required Inputs for Subtask 4-1.1

Input	Description
Design	• Original structural design documents for the pool, the racks, the fuel transfer canal, and the fuel handling building. • Description of SFP cooling systems and the associated support systems.
Operational (Procedures)	• Configuration and loading procedures for SFP at each unit. • Conduct of operations descriptions/procedures for cask loading (if they exist, given the site does not have an ISFSI). • Enunciator response, off-normal, and special event procedures that are relevant for the SFP Refueling procedures.
Maintenance	• Maintenance and Technical Specifications associated with SFP systems and instrumentations.
Engineering(1)	• Treatment of internal and external hazards and their associated initiating events from the reactor PRA. • Any Safety analyses that can support SFP PRA tasks related to identification, screening, or binning of initiating events.
Note (1) – Full or partial Licensee PRA analysis is included as a part of engineering input.	

15.1.1.3 Analysis Steps

Initiating Event Analysis consists of the following interrelated steps:

- Literature search and external hazard frequencies.
- Screening, grouping and hazard discretization.
- Initiating event analysis.
- Operating cycle discretization.

The objective of the first step is to compile initiating events that have been identified in past studies, identify any initiating events that are unique to this site, and to migrate and apply the external event frequencies from the reactor PRA. The second step aims to screen the events so that the effort may be focused on the risk-significant events and to group/discretize the hazards (e.g., divide the seismic hazard in to a set of seismic initiating event bins). The objective of the third step is to develop the initiating event frequencies resulting from both internal and external hazards by adjusting the frequencies estimated for the reactor PRA as necessary in order to cover the differences between SFPs and the reactors (e.g., a flooding initiating event frequency could be different due to differing elevations of key equipment.) The fourth step will discretize the reactor operating cycle in to a finite set of operating cycle phases, akin to the plant operating states in the shutdown PRA.

Step 1 – Literature Search and External Hazard Frequencies

Significant research has been done related to the risks from spent fuel pools (e.g., NUREG-1353 [1], NUREG-1738 [2], and NUREG/CR-6451 [3]). A literature review will serve to draw upon this information to identify potential hazards and to calculate their frequency. External

hazard screening from the reactor PRA will be reviewed to identify if there are any external hazard groups that were screened out of the reactor PRA that should be included in the SFP PRA.

Step 2 – Screening, Grouping and Hazard Discretization

Many of the initiating events may be screened as not likely to be risk-significant based on a variety of criteria. When possible, the screening will follow the same process, and use the same criteria used for the reactor PRA. Additional SFP-specific screening criteria (e.g., boil off time) will be identified at a later time during the study. Events will be grouped to the extent possible such that the grouping preserves important details for the subsequent analysis. Other events, such as seismic events, may need to be separated into bins. Seismic binning will follow the same approach used for the reactor PRA.

Step 3 – Initiating Event Analysis

The SFP initiating event frequencies resulting from both internal and external hazards that are considered for the reactor PRA will be utilized and adjusted as necessary. Review of generic and plant-specific operating experience along with previous PRA studies will be performed to develop a list of initiating events that are not already addressed by the reactor PRA (e.g., SFP cooling, aircraft crash, etc.) and that are "screened-in." Note that this step and the screening step are somewhat iterative.

Step 4 – Operating Cycle Discretization

The time since the last core offload has a significant impact on decay heat level, which in turn affects the boil-off duration and fuel behavior following uncovery. In addition, various plant activities result in changes in the number of assemblies that are in the SFP. This necessitates dividing the operating cycle so that calculations and logic modeling may be done using a single decay heat and assembly population for each phase. For reference, a recent plant-specific consequence analysis for a BWR (the NRC's Spent Fuel Pool Scoping Study[19]) discretized a 23-month operating cycle into five phases (two during the outage and three for the remainder of the operating cycle).

15.1.1.4 Documentation

The documents generated and compiled from this cross-cutting PRA element correspond to various analysis steps and they are identified in Table 15-2. The documentation (along with the identified inputs described in Section 15.1.1.2) are succinct and transparent in enabling an independent quality assurance (QA) and peer review.

Table 15-2 Documentation Needs for Initiating Event Analysis of Subtask 4-1.1

[19] This project was discussed during a public meeting of the Advisory Committee on Reactor Safeguards on April 12, 2012, e.g., see page 80 of 242 of http://pbadupws.nrc.gov/docs/ML1211/ML12115A094.pdf.

Description
• List of IEs will be compiled based on the results of the literature review and the review of the reactor screening analysis. • A table listing the initiating events as well as which events were screened and for what reason. • Development of initiating event frequencies for both internal and external hazards. • Description of the operating cycles and discussion of their technical bases.

15.1.1.5 Task Interfaces

The interfaces for various technical steps of the Initiating Event Analysis subtask with other PRA tasks/steps are as follows:

- Steps 2 and 3 require information from the reactor internal and external hazards PRA and the associated screening analysis.

- The results of Steps 1 through 4 are required for other technical elements of the SFP PRA (e.g., quantification).

15.1.1.6 References

1. NUREG-1353, "Regulatory Analysis for the Resolution of Generic Issue 82 Beyond Design Basis Accidents in Spent Fuel Pools," April 1989.
2. NUREG-1738, "Technical Study of Spent Fuel Pool Accident Risk at decommissioning Nuclear Power Plants," February 2001.
3. NUREG/CR-6451, "A Safety and regulatory Assessment of Generic BWR and PWR Permanently Shutdown Nuclear Power Plants," August 1997.
4. NUREG-1774, "A Survey of crane Operating Experience at U.S. Nuclear Power Plants from 1968 through 2002," June 2003.

15.1.2 Subtask 4-1.2: Structural Analysis

The Structural Analysis consists of the following steps:

- Development of a finite element model.
- Assessment of available information for the Vogtle plant and other plants of similar construction to identify the preliminary failure modes and locations of interest.
- Performance of finite element analysis.
- Perform structural assessments of other SSCs.

The objective of the first step is to develop a finite element model for the SFP so that the effect of various hazards on the SFP such as seismic events and cask drops can be evaluated. The objective of the second step is to assess available information for the Vogtle plant and other plants of similar construction to identify the preliminary failure modes and locations of interest. The objective of the third step is to use the model to perform analyses to determine the effect of these events on the pool, and to serve as boundary conditions for the accident progression analysis. The objective of the fourth step is to perform structural assessments for other systems, components, and structures (SSCs) of interest (e.g., seismic effects on the fuel handling building, effects of missiles on the SFP liner, etc).

15.1.2.1 Assumptions and Limitations

- To the extent possible, the fragilities for SSCs that are used in the reactor PRA and are also relevant to SFP PRA or accident mitigation, will be directly used.

- To the extent possible, the hazard characterizations developed in the reactor PRA but applicable to the site will be directly used.

15.1.2.2 Inputs

The design, maintenance and operational information required in order to perform the associated steps of structural analysis are identified. The information needed to perform the structural analysis step, at a minimum, is listed in Table 15-3.

Table 15-3 Required Inputs for Subtask 4-1.2

Input	Description
Design	• Original structural design documents for the pools, the racks, the fuel transfer canal, and the fuel handling building • Detailed drawings of SFP penetrations, including geometry information such as cell to cell pitch and orifice sizes at the bottom of each cell
Operational (Procedures)	• None
Maintenance	• None
Engineering(1)	• Fuel handling building structural analysis as a part of seismic PRA when it becomes available. • Analysis and characterization of various hazards in the reactor PRA that are applicable to the site. • A description of other safety analyses or supporting PRA calculations that were performed along with their results.
Note (1) – Supporting calculations performed by the Licensee for their PRA are included as a part of engineering input.	

15.1.2.3 Analysis Steps

The details of the structural analysis steps listed earlier are discussed below.

Step 1 – Development of a Finite Element Model

A finite element model will be developed to perform structural calculations for the SFP. This nonlinear finite element model may be developed in LSDYNA, and will include sufficient detail of the pool structures, transfer canals, and fuel handling building to predict the overall structural response. Separate effect models may be developed (1) to study the effects of a cask drop event, and (2) to predict detailed stress concentrations in areas where the global model predicts potential failure.

Step 2 – Assess Available Information for The Vogtle Plant and Other Plants of Similar Construction to Identify The Preliminary Failure Modes and Locations of Interest

The Licensee's models and analyses for structural evaluation of SFP and related systems will be reviewed and assessed in order to determine what additional analyses may have to be performed independently in support of the SFP PRA. In additional Licensee's structural analysis in support of a seismic PRA will also be reviewed and assessed for their relevance to the SFP PRA. Coordination with the Licensee for timely access to these materials will play an important role in SFP PRA since the peer reviewed seismic PRA may not be available until June of 2014.

Step 3 – Finite Element Analysis

This analysis will include challenges to the integrity of the SFP, primarily from seismic events and cask drops. Specifically, the output will be whether and where a leak develops, as well as an estimate of the leak size.

Step 4 – Other Structural Assessments

Structural assessments will also be performed for the fuel (from seismic events and missiles), the fuel handling building (from all external hazards), hydrogen events, and structural effects from internal flooding. Phenomena such as soil liquefaction will be considered. These assessments will be based on past study results, engineering judgment, and/or analytical calculations.

15.1.2.4 Documentation

The documents generated and compiled from this cross-cutting PRA element correspond to its analysis steps and they are identified in Table 15-4. The documentation (along with the identified inputs described in Section 15.1.2.2) are succinct and transparent in enabling an independent QA and peer review.

Table 15-4 Documentation Needs for Structural Analysis – Subtask 4-1.2

Description
• A finite element model for the SFP along with supporting documentation. • Description of the case runs along with their results. • A distillation of the results in a form usable by the accident progression and success criteria analysis (e.g., effective leak rate as a function of water height, with associated location; pressure at which the fuel handling building is expected to structurally fail with associated location).

15.1.2.5 Task Interfaces

The interfaces for various technical steps of the Structural Analysis subtask with other PRA tasks/steps are as follows:

- Steps 1 and 3 in structural analysis are dependent on the Initiating Event Analysis of the SFP PRA.

- Reactor seismic PRA supporting structural analysis can support SFP structural analysis.

15.1.2.6 References

None.

15.1.3 Subtask 4-1.3: Accident Sequence Analysis

The accident sequence analysis consists of the following two steps:

- "Level 1" Event Trees
- "Level 2" Event Trees

The objective of the first step is to develop event trees capturing system performance, key uncertainties in structural boundary conditions, and key operator actions through the point of significant fuel uncovery (e.g., water level at the fuel mid-height) and anticipated fuel damage. The objective of the second step is to develop the SFP-equivalent of Level 2 PRA accident progression event trees, covering additional mitigative equipment performance, additional operator actions, and key phenomena in characterizing the various release categories/bins, their likelihoods, and associated attributes that can be used for risk quantification (Subtask 4-1.7).

15.1.3.1 Assumptions and Limitations

The treatment of offsite recovery credit will be the same as in the reactor task. Longer duration offsite power recovery beyond those typically encountered during reactor PRA may be considered.

15.1.3.2 Inputs

The design, maintenance and operational information required in order to perform the associated steps of accident sequence analysis are identified. The information needed to perform accident sequence analysis step, at a minimum, are listed in Table 15-5.

Table 15-5 Required Inputs for Subtask 4-1.3

DRAFT

Input	Description
Design	• Description of mitigation systems and strategies, and information from the site visit by SFP team early in the project
Operational (Procedures)	• Configuration and loading patterns for the SFP at each unit • Conduct of operations descriptions/procedures for cask loading (if they exist, given the site does not have an ISFSI) • Core monitoring reports and nuclear design reports for last 3 cycles • Enunciator response, off-normal, and special event procedures that are relevant for the SFP Refueling procedures • EDMGs (same as Level 2 reactor PRA) • SAMGs if they have been modified by that point to include SFP considerations (would also be the same as the Level 2 reactor PRA)
Maintenance	• None
Engineering(1)	• TracWorks® output • A description of other safety analyses or supporting PRA calculations that were performed along with their results.
Note (1) Supporting calculations performed by the Licensee for their PRA is included as a part of engineering input.	

15.1.3.3 Analysis Steps

The details of the accident sequence analysis steps are discussed below.

Step 1 – "Level 1" Event Trees

Event trees covering sequences analogous to a reactor "Level 1" PRA. It is intended that an end state similar to "core damage" will be defined, likely with a set of conditions where fuel damage is anticipated (or even imminent), e.g., water level at ½ fuel height. Human actions for Level 1 event tree models are explicitly identified and described to facilitate the performance of the human reliability analysis task.

Step 2 – Develop "Level 2" Event Trees

The starting point for the Level 2 event trees is assumed to be the surrogate end-state condition for fuel damage defined in Level 1 event trees. Level 2 event trees cover system responses and operator actions including recovery actions taken in response to and after the surrogate condition of fuel damage has been reached. These human actions for Level 2 event tree models are explicitly identified and described to facilitate the performance of the human reliability analysis task. The quantification of the phenomenological processes associated with SFP accidents are performed using MELCOR, together with other supporting analyses to arrive at the required split fractions for the event tree model. This will also consider various dependencies and mitigation actions. Furthermore, it will be necessary to adapt, as necessary, the binning logic developed in the reactor Level 2 PRA in order to bin the SFP Level 2 event tree end-states in to a small number (i.e., less than a dozen) release categories. Note that binning from a recent consequence analysis (the aforementioned NRC SFP Scoping Study) found that binning on warning time was not necessary for that analysis (because all releases

occurred after effective evacuation could be commenced), and rather, binned based on 3 bins each of iodine and cesium cumulative release magnitude. The Level 2 event trees utilize MELCOR results for accident progression to bin the accident sequences and provide estimates of the release fractions and timings.

15.1.3.4 Documentation

The documents generated and compiled from this cross-cutting PRA element correspond to its analysis steps, and they are identified in Table 15-6. The documentation (along with the identified inputs described in Section 15.1.3.2) are succinct and transparent in enabling an independent QA and peer review.

Table 15-6 Documentation Needs for Accident Sequence Analysis – Subtask 4-1.3

Description
• Individual "Level 1" and "Level 2" event tree notebooks each describing the models, the definition of event tree branches, treatment of human actions (e.g., for modeling and off-normal procedure actions and EDMG actions[20]), and recovery actions that will be developed on SAPHIRE8. • Compilation of the event tree end-states, accident sequence mission time, success criteria, and other assumptions for accident progression. • The technical basis for quantification of branch probabilities associated with the accident progression event tree model.

15.1.3.5 Task Interfaces

The interfaces for various technical steps of the Accident Sequence Analysis subtask with other PRA tasks/steps are as follows:

- Step 1 requires substantive completion of the Initiating Event Analysis and the Structural Analysis.
- Steps 1 and 2 must be performed iteratively with the various steps of the Systems Analysis, Human Reliability Analysis, and the Accident Progression and Success Criteria Analysis.

15.1.3.6 References

None.

15.1.4 Subtask 4-1.4: Systems Analysis

The Systems Analysis consists of two steps:

1. Data/probabilities for SFP-specific basic events
2. Fault Tree analysis

[20] It is recognized that SFPs are not currently covered in the EOPs or SAMGs.

The objective of the first step is to compile the reliability data (e.g. failure probability, unavailability, CCF, etc.) for various basic events for the system fault trees with their associated uncertainties. The objective of the second step is to develop models that can be used to estimate the failure probabilities for the SFP mitigation systems and associated strategies.

15.1.4.1 Assumptions and Limitations

- Plant specific data will be used to the extent available for system analysis. Special attention will be given to estimating the plant specific unavailability of systems and components resulting from the operational practices (configuration control and maintenance unavailability).

- Failure probabilities and fragilities for SFP systems during various hazards are obtained from reactor PRA, generic studies (e.g., NUREG-1774 for crane failures [1]), and NRC/EPRI published generic sources for reliability data, common cause failures, and failure of passive components (e.g., pipes).

- Low-likelihood events that are fault-tree intensive but unlikely to be contributors to risk (e.g., loss of SFP cooling due to support system failure without further complication) will be screened out.

15.1.4.2 Inputs

The design, maintenance and operational information required in order to perform the associated steps of system s analysis are identified. The information needed to perform the systems analysis step, at a minimum, are listed in Table 15-7.

Table 15-7 Required Inputs for Subtask 4-1.4

Input	Description
Design	• Description of mitigation systems and strategies, and information compiled from the site visit by SFP team early in the project
Operational (Procedures)	• Enunciator response, off-normal, and special event procedures that are relevant for the SFP Refueling procedures • EDMG systems and strategies (same as Level 2 reactor PRA) • SAMGs; systems and strategies especially if they have been modified by that point to include SFP considerations (would also be same as Level 2 reactor PRA)
Maintenance	• Maintenance and Technical Specifications including configuration control practices associated with SFP systems and instrumentations
Engineering(1)	• A description of other safety analyses or supporting PRA calculations that were performed along with their results • Any licensee-generated data for SFP-related

	component reliability
Note (1) – Note (1) Supporting calculations performed by the Licensee for their PRA is included as a part of engineering input.	

15.1.4.3 Analysis Steps

This section discusses the details of the systems analysis steps.

Step 1 – Data/Probabilities for SFP Specific Basic Events

This task is performed similarly to those for the reactor PRA, as in Section 12.1.1.6, for data analysis. Basic event data for SFP-specific events will be developed, to include the use of any available data sources for same or similar equipment, arriving at basic event characteristics (mean probabilities, distributions, common-cause failure grouping).

Step 2 – Fault Tree Analysis

This task is performed following the guidance provided under the cross-cutting section PRA element on system analysis in Section 5. The failure probability of key safety systems will be modeled using fault trees. The level of detail (sub-component versus component versus train-level) may vary so that available resources are focused on risk-significant events. Human errors modeled in the fault tree are explicitly identified and described to facilitate the performance of the human reliability analysis task.

15.1.4.4 Documentation

The documents generated and compiled from this cross-cutting PRA element correspond to its analysis steps and they are identified in Table 15-8. The documentation (along with the identified inputs described in Section 15.1.4.2) are succinct and transparent in enabling an independent QA and peer review.

Table 15-8 Documentation Needs for System Analysis – Subtask 4-1.4

Description
• Individual system notebooks containing similar information to that discussed in Section 5 for the cross-cutting element for system analysis. • Compilation of all the reliability data and fragilities, and identification of their sources. • Description of all human errors identified in the fault trees. • A report documenting the systems analysis and the related SAPHIRE input and output.

15.1.4.5 Task Interfaces

The interfaces for various technical steps of the Systems Analysis subtask with other PRA tasks/steps are as follows:

- Step 1 interfaces with reactor PRA tasks for reliability data and fragility information.

- Step 2 must be performed iteratively with the Accident Sequence Analysis, Human Reliability Analysis, and Accident Progression and Success Criteria Analysis for SFP.

15.1.4.6 References

1. NUREG-1774, "A Survey of Crane Operating Experience at U.S. Nuclear Power Plants from 1968 through 2002," June 2003.

15.1.5 Subtask 4-1.5: Human Reliability Analysis

Section 7 describes the human reliability analysis (HRA) task, in general. Because of the lack of previous HRAs for spent fuel pool, HRA guidance for other PRA types will be used and extended as appropriate. In particular, due to the treatment of operator actions outside the main control room, the staff are expected to use guidance provided in NUREG-1921, *EPRI/NRC-RES Fire Human Reliability Analysis Guidelines*.

15.1.6 Subtask 4-1.6: Accident Progression and Success Criteria Analysis

The Accident Progression Analysis consists of four steps:

1. SCALE analysis for decay heat and radionuclide inventories
2. MELCOR model development
3. MELCOR accident progression and success criteria analysis
4. Equipment survivability

The objective of the first step is to produce the decay heat levels and the radionuclide inventories (i.e., masses) used by MELCOR. The objective of the second and third steps is to develop the success criteria, effectiveness of the mitigation strategies, the associated timing for human actions, severe accident loads and conditions, and characterization of radiological releases to the environment. The objective of the fourth step is to address the performance of components in harsh environments (e.g., high temperatures, effects of a hydrogen combustion event).

15.1.6.1 Assumptions and Limitations

- It is assumed that the lessons learned from the US-led OECD-NEA PWR spent fuel pool testing program (e.g., nodalization issues, oxidation behavior, radial radiative heat transfer, etc.) will have been incorporated into the relevant MELCOR physical models as appropriate, and that other lessons learned (e.g., hydraulic flow resistance coefficients) can be readily incorporated into the MELCOR input model.

- It is assumed that the existing capabilities of MELCOR, once the above modifications are realized, will be sufficient for SFP PRA support. Some examples where this assumption may be challenged include (i) simultaneous modeling of the reactor and spent fuel pool during movement of fuel to the SFP, (ii) simultaneous release and transport of radionuclides from two sources (i.e., reactor and SFP) (if the atmosphere of containment and the refueling building are connected [e.g., following water boil-off with the refueling transfer canal open]), (iii) modeling of core concrete interaction for spent fuel pool accidents, and (iv) mixing and ignition criteria for combustible gases.

15.1.6.2 Inputs

The design, engineering, maintenance, and operational information required in order to perform the associated steps of the SFP PRA analysis are identified. The information needed to perform the various subtasks is listed Table 15-9.

DRAFT

Table 15-9 Required Inputs for Subtask 4-1.6

Input	Description
Design(1)	• Detailed drawings of SFP penetrations, including geometry information such as cell to cell pitch and orifice sizes at the bottom of each cell • Site visits by SFP team during the middle of the project to fill information gaps
Operational (Procedures)	• Configuration and loading procedures for SFP at each unit • Core monitoring reports and nuclear design reports for last 3 cycles • Nuclear Design Reports (NDRs) for current and previous two operating cycles
Maintenance	• Maintenance and Technical Specifications associated with SFP systems and instrumentations
Engineering(2)	• TracWorks® output for the current SFP loading • Typical SFP temperatures during different portions of the operating cycle • Radionuclide inventory and decay heat estimates for SFP (SCALE) • A description of other safety analyses or supporting PRA calculations that were performed along with their results • Any licensee-generated data for SFP-related component reliability
Note (1) – Much of the above information can also be found in the supporting modeling tools used by the licensee, e.g. TracWorks®. Note (2) – Supporting calculations performed by the licensee for their PRA is included as a part of the engineering input.	

15.1.6.3 Analysis Steps

The details of the accident progression and success criteria steps are discussed below.

Step 1 – SCALE Analysis for Decay Heat and Radionuclide Inventories

The irradiation history and decay of each assembly in the pool will be explicitly modeled using the ORIGEN code (part of the SCALE code system). The SCALE analysis will produce the decay heat levels and radionuclide mass inventories that are used by MELCOR. The licensee's input will be used (after a review) to the extent possible for cases where similar calculations had been performed by the licensee. The results from this step will allow the grouping of the assemblies into the multiple fuel "rings" (as guided by the results of the MELCOR analyses performed for other SFP studies) that will be used in the MELCOR model.

Step 2 – MELCOR Model Development

A simplified and detailed MELCOR model are needed to calculate the progression of events in the SFP, whether system and human responses taken can avoid or mitigate releases, and what the associated source terms for the Level 3 analysis are. The simplified model (using a volumetric heat generation rate to represent the fuel) will be used for producing success criteria for the "Level 1" portion of the analysis. This model will also be used to handle earlier stages of accident scenarios when the Unit 2 SFP is hydraulically connected to the Unit 2 reactor or the Unit 1 SFP. Input provided from the licensee will be used to develop the MELCOR input files. In some cases, alternative analytically-based calculations can be used to arrive at success criteria and timing information needed for the Level 1 PRA.

Step 3 – MELCOR Calculations

Simplified MELCOR runs will be performed with the main focus on developing the success criteria, effectiveness of the mitigation strategies, and the associated timing for human actions. More detailed MELCOR analysis will be performed to support the accident progression event tree quantification process, and to arrive at the magnitude and timing of the radionuclide releases and other relevant information for Level 3 PRA.

Step 4 – Equipment Survivability

In a SFP event, safety equipment may be challenged by humidity, hydrogen, heat, flooding, etc. The conditions under which this equipment is no longer able to fulfill its function will be assessed.

15.1.6.4 Documentation

The documents generated and compiled from this cross-cutting PRA element correspond to its analysis steps and they are identified in Table 15-10. The documentation (along with the identified inputs described in Section 15.1.6.2) are succinct and transparent in enabling an independent QA and peer review.

DRAFT

Table 15-10 Documentation Needs for Accident Progression and Success Criteria Subtask 4-1.6

Description
• Results from SCALE calculations for decay heat and radionuclide inventory. • A simplified and detailed MELCOR model (including documentation) to analyze SFP events. • Documentation for a set of MELCOR calculations and their results, to form the basis of success criteria, event progression, and source terms. • Equipment survivability determination and related documentation of an analysis of the survivability of equipment under potential adverse conditions (e.g., high humidity) for SFP events. • A description of the SCALE and MELCOR results, as well as the equipment survivability analysis, to be included in the final report.

15.1.6.5 Task Interfaces

The interfaces for various technical steps of the Accident Progression and Success Criteria Analysis subtask with other PRA tasks/steps are as follows:

- It interfaces with human reliability analysis by providing the timing available for operator actions and successful recovery actions.
- It interfaces with system analysis subtask by providing the required information on success criteria.
- It interfaces with accident sequences analysis by providing the information on the effectiveness of the various strategies and the mission time associated with achieving a successful end state.
- It interfaces with the level 3 PRA by producing the fraction of the radionuclide inventories that will be releases, and the timing associated with plumes.

15.1.6.6 References

None.

15.1.7 Subtask 4-1.7: Quantification

The quantification subtask consists of the following two steps:

1. Model integration
2. Model quantification

The objective of the first step is to integrate and examine for appropriateness the Level 1 accident sequences for the surrogate criteria for fuel damage, and level 2 end states for the set of defined release categories. The objective of the second step is to quantify the occurrence frequency of the fuel damage and each of the release categories for each of the OCPs such that the dominant contributors can be identified.

15.1.7.1 Assumptions and Limitations

- The same quantification routine for the reactor PRA as implemented in SAPHIRE 8 is assumed adequate for performing this subtask.

- The issue of quantifying large failure probabilities in the model will be dealt with in the same manner as in the reactor tasks.

15.1.7.2 Inputs

No input is needed for this subtask when there is no licensee PRA conducted for the SFP (see Table 15-11). For cases when there is an independent licensee's PRA, comparison of the results, identification of the major differences, and determination of reason behind the differences would become necessary.

Table 15-11 Required Inputs for Subtask 4-1.7

Input	Description
Design	• None
Operational (Procedures)	• None
Maintenance	• None
Engineering	• A site visit during model quantification to review major assumptions and inputs. • Summary results and insights from the past studies.

15.1.7.3 Analysis Steps

The quantification subtask consists of the following two interrelated steps:

1. Model integration
2. Model quantification

Step 1 – Model Integration

This step follows the ASME standard for reactor PRA. The fault trees, Level 1 event trees, and Level 2 accident progression trees are linked as a part of this subtask. In addition to common cause failures, all other dependencies such as those due to design (system dependencies), basic event probabilities/split fractions (correlations), human action dependencies, and dependencies caused by specific sequences of accidents are modeled and examined to make sure they accurately reflect the model assumptions. A sample of Level 1 accident sequence minimal cutsets and the associated Level 2 accident progression path sets are generated and examined to make sure they are consistent with the modeling assumptions.

Step 2 – Model Quantification

Quantify the event tree and fault tree models to produce importance measures, fuel damage frequency, and release category frequencies. This step follows the ASME standard for reactor PRA and will address issues such as selection of the truncation limit, treatment of large

probabilities, estimation of mean values, and others. The results of quantification will also be examined based on their underlying assumptions and with comparison to results from previous studies.

15.1.7.4 Documentation

The documents generated and compiled from this cross-cutting PRA element correspond to its analysis steps and they are identified below in Table 15-12. These documents considered to be sufficient for the following objectives:

- Allow an independent analyst to understand how the analyses were performed.
- Facilitate modifications as necessary to maintain an up-to-date PRA model.
- Provide all the information needed for and any other potential peer reviews.

Table 15-12 Documentation Needs for Quantification and Model Integration – Subtask 4-1.7

Description
• Compile dominant accident sequences for fuel damage, describe the accident progression, and provide the basis and the assumptions behind them. • Compile dominant accident sequences for the release categories, describe the accident progression, and provide the basis and the assumptions behind them. • Document the characterization of the release categories; release fractions for various radionuclide groups, timing of releases, occurrence frequency, and the plume characteristics for Level 3 analysis. • The PRA results of the model will be in the final report. These results will include importance measures, fuel damage frequency and release category frequency. • Compile the major difference and similarities between this study and previous studies.

15.1.7.5 Task Interfaces

The interfaces for various technical steps of the quantification technical element are as follows:

- Steps 1 and 2 require completion of all preceding steps within the SFP Level 1/2 PRA.

15.1.7.6 References

None.

15.1.8 Subtask 4-1.8: Uncertainty Analysis

Uncertainty consists of two steps:

1. Identify sources of uncertainty
2. Characterize sources of uncertainty

The objective of the first step is to compile the sources of uncertainties and the assumptions made in each of the subtasks for the SFP PRA. The objective of the second step is to

characterize sources of uncertainties and their impact on the risk values estimated in the quantification task.

15.1.8.1 Assumptions and Limitations

- The uncertainties will be identified and characterized in the same manner and to the same extent as in the reactor PRA.

15.1.8.2 Inputs

None anticipated at this time.

15.1.8.3 Analysis Steps

Uncertainty analysis consists of the following two interrelated steps:

1. Identify sources of uncertainty
2. Characterize sources of uncertainty

Step 1 – Identify Sources of Uncertainties

Major sources of uncertainties and assumptions in each of the analysis step for all the subtasks in the SFP PRA will be identified. The description for each source of uncertainties or assumptions will be compiled along with possible means to address them (through propagation, sensitivity analysis, or expert judgment).

Step 2 – Characterize Sources of Uncertainties

To the extent possible, the various sources of logic model (sequence frequency) uncertainties will be propagated through the Level 1 event tree model, and possibly, the Level 2 model as well (depending on what the reactor tasks do). When the uncertainties cannot be quantitatively addressed, sensitivity analysis will be used to characterize them. Uncertainties in the deterministic models will be identified, and their effect will be addressed either qualitatively through expert judgment or via sensitivity analysis.

15.1.8.4 Documentation

The documents generated and compiled from this cross-cutting PRA element correspond to its analysis steps and they are identified below in Table 15-13. The documentations are succinct and transparent in enabling an independent QA and peer review.

Table 15-13 Documentation Needs for Uncertainty Analysis – Subtask 4-1.8

Description
• Compile sources of uncertainties from all elements of the SFP PRA and identify how they are accounted for in the PRA: quantitative uncertainty evaluation, sensitivity studies, expert judgment, or study assumptions. • Document the impact and importance of various uncertainty sources.

15.1.8.5 Task Interfaces

This task interfaces with all subtasks for identifying the sources of uncertainties.

15.1.8.6 References

None.

15.2 Task 4-2: Level 3 Spent Fuel Pool PRA

[TO BE COMPLETED]

DRAFT

16. Technical Approach for Dry Cask Storage PRA

This section describes the technical approach for the various analytical tasks of Task 5, Quantification of the Dry Cask Storage [DCS] PRA. Task 5 is divided into two parts:

1. Task 5-1: Dry Cask Storage PRA for Cask Damage (Release Frequency)
2. Task 5-2: Dry Cask Storage PRA for Health Effects (Consequence Analysis)

Task 5-1 describes the technical elements to determine the frequencies associated with potential radiological releases. Task 5-2 describes technical elements to determine the consequences associated with the released radioactive material to the environment.

Two previous analyses are significant sources of information for this task.

1. EPRI's DCS study, "Probabilistic Risk Assessment (PRA) of Bolted Storage Casks: Updated Quantification and Analysis," Technical Report No. 1009691 published in 2004 [1]. This study focused on the use of Transnuclear (TN) dry cask storage system (DCSS) in a PWR setting.

2. The NRC's DCS study, "A Pilot Probabilistic Risk Assessment of a Dry Cask Storage System at a Nuclear Power Plant," NUREG-1864 published in 2007 [2]. This study focused on use of the Holtec International Storage and Transfer Operation Reinforced Module (HI-STORM) 100 DCSS in a BWR with Mark I setting.

Two important subtleties need to be recognized about dry cask storage operations (DCSOs). First, the specific handling operations depend on the design of the dry cask storage system (DCSS). Some DCSS designs use a directly loaded, bolted-closure storage cask to provide confinement, shielding, and thermal protection. This storage cask can be placed directly on the independent spent fuel storage installation (ISFSI) pad; an example of this type of stand-alone bolted cask design is the Transnuclear (TN)-40 metal cask (Figure 16-1). Second, other DCSS designs use the canister as the confinement boundary and use a separate structure to provide shielding and thermal protection. In these DCSS designs, the loaded canister must be transferred by a transfer cask to the storage structure/container. An example for this type of design is the HI-STORM 100 storage cask shown in Figures 16-2 and 16-3.

16.1 Task 5-1: Dry Cask Storage PRA for Cask Damage (Release Frequency)

This task is divided into the following seven subtasks, comprised of seven technical elements:

1. Subtask 5-1.1: Dry cask description and operational phases
2. Subtask 5-1.2: Initiating event analysis
3. Subtask 5-1.3: Data analysis
4. Subtask 5-1.4: Human reliability analysis
5. Subtask 5-1.5: Success criteria (structural and thermal analysis)
6. Subtask 5-1.6: Accident sequence analysis and quantification
7. Subtask 5-1.7: Uncertainty analysis

Figure 16-1 shows the interfaces for all subtasks in the DCS PRA.

Figure 16-1 Series of Transnuclear (TN)-40 Casks at an Independent Spent Fuel Storage Installation

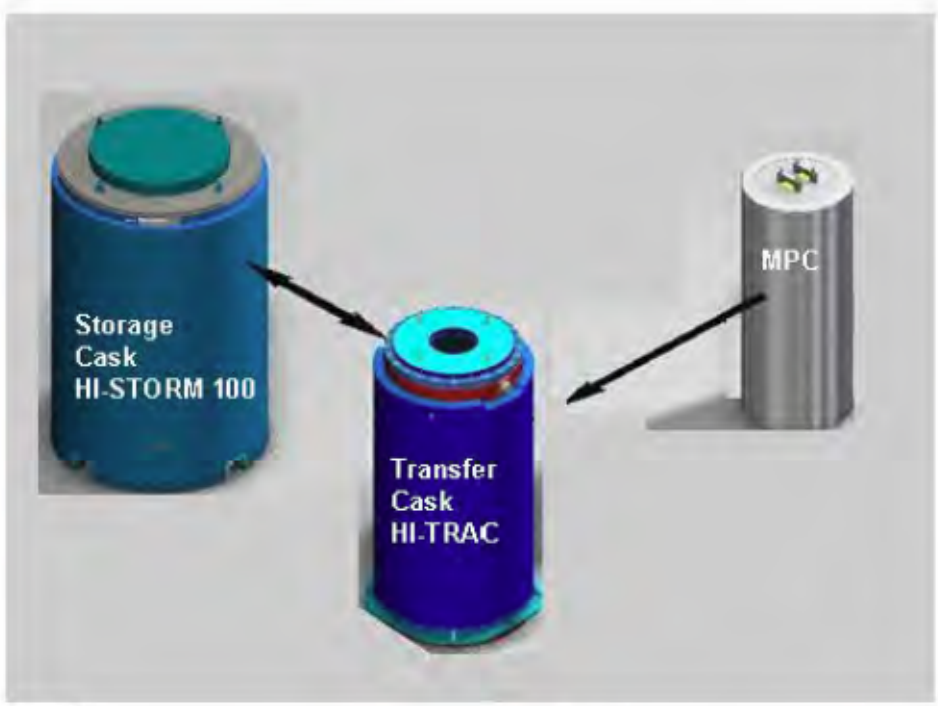

Figure 16-2 Components of the Holtec International HI-STORM 100 Cask Storage System

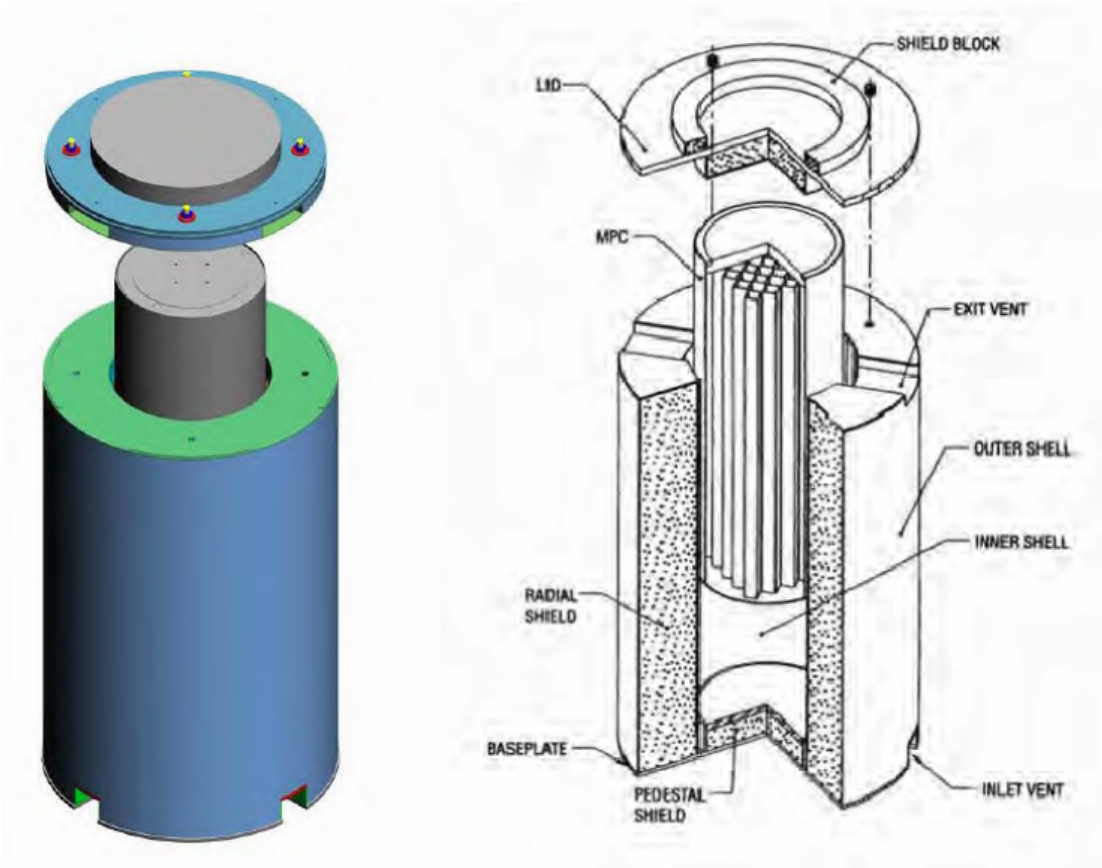

Figure 16-3 Holtec International HI-STORM 100 Cask Storage System with Multipurpose Canister (MPC) Partially Inserted and Diagram of Features

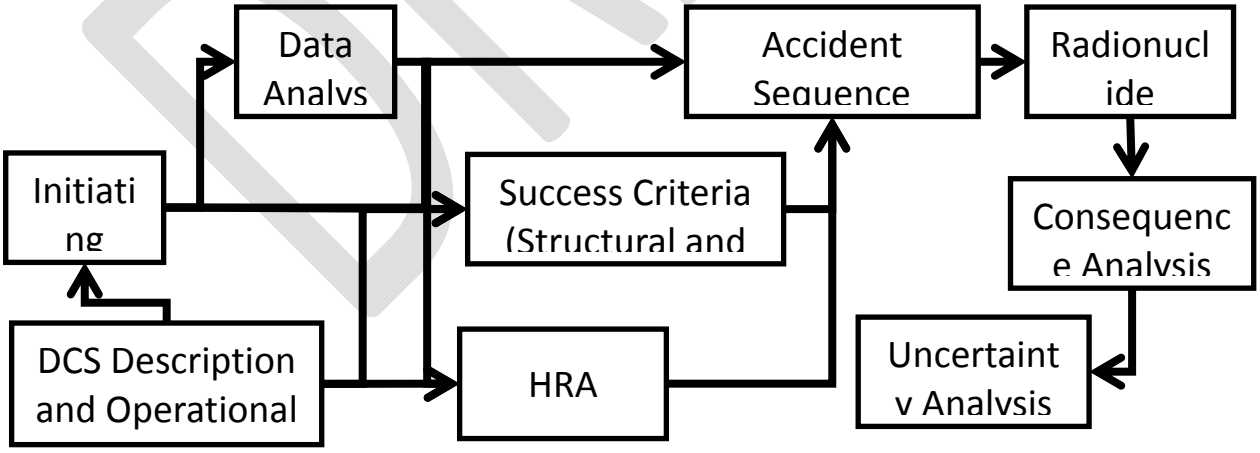

Figure 16-4 Interfaces of Dry Cask Storage PRA

16.1.1 <u>Subtask 5-1.1: Dry Cask Description and Operational Phases</u>

The first step in performing DCS PRA is familiarization with the type and design of the DCS and its operational phases in loading and transferring the spent fuel from the spent fuel pool to the ISFSI storage pad. During this effort, the analysts become familiar with the specific design, procedures, and operational aspects of the DCS operation. As a result, the analysis will reflect the actual design and procedures in determining what could go wrong, how could it be prevented, and what the consequences would be. Vogtle has selected [XXXXXXXXXXXXXX] for storing the spent fuel.

16.1.1.1 Assumptions and Limitations

The following are a list of assumptions and limitations that define the scope and level of detail performed for this task.

- Vogtle will use [XXXXXXXX] for dry storage.

16.1.1.2 Inputs

The design, maintenance and operational information required in order to perform the associated steps of Systems Analysis are identified in Table 16-1.

Table 16-1 Required Inputs for Subtask 5-1.1

Input	Description
Design	• The design of the DCS, along with design characteristics as they relate to the required fuel decay heat and cooling time, cask transfer, cask storage, etc.
Maintenance	• Procedures for performing periodic inspections and maintenance
Operational (procedures)	• Procedures for fuel loading, cask rigging, cask drying, cask transport and cask installation
Engineering	• Plant layout • Cask movement flow path through fuel and auxiliary buildings, and the buildings structural strength in case of a cask drop • Potential drop heights, potential obstructions, etc.

16.1.1.3 Analysis Steps

The objective of this subtask is to become familiar with the DCS and it operational requirements. This includes obtaining information related to the dry cask storage system, the processes used in loading, transferring and storing the dry cask, and other design details needed to identify what events could potentially affect the system. The cask system selected for storing Vogtle spent fuel is the [XXXXXXXX]. This cask system consists of three major components, including a [XXXXXXXXXXXXXXXXXXXXXXXXXXXXXXXXXXXXXXXXXXXXXXXXXX]. The dry cask storage operation (DCSO) is generally divided into the three phases of handling/loading, transfer, and storage. During the handling/loading phase, spent fuel assemblies are placed into the [XXXXXXXXXXX]. [XXXXXXXXXXXXXXXXXXXXXXXXXXXXXXXXXXXXXXXXXXXXXX], and transported to the independent spent fuel storage installation (ISFSI) storage pad. The various DCSO activities identify site-specific procedures and cask movement flow paths with potential heights at which the heavy load is being moved. This information will then be used in other subtasks.

16.1.1.4 Documentation

Document the DCS functions, applicable procedures and the cask movement path including human actions and potential cask height above the floor at each step of cask movement. Table 16-2 provides details of documentation needs. The documentation (along with the identified inputs described in Section 16.1.1.2) is succinct and transparent in enabling an independent quality assurance (QA) and peer review.

Table 16-2 Subtask 5-1.1 Documentation

Description
• Cask design and loading process detail sufficient to identify initiating events and support subsequent analyses • Potential drop height at each step of cask movement • Human actions and potential dependencies

16.1.1.5 Task Interfaces

The output of this subtask will become part of the input to Subtasks 5-1.2, "Initiating Event Analysis," 5-1.4 "Human Reliability Analysis," and 5-1.5 "Success Criteria: Structural and Thermal Hydraulic Analysis," see Figure 16-4.

16.1.2 Subtask 5-1.2: Initiating Event Analysis

The objective of initiating event analysis is to identify those events that can present a hazard to the cask and potentially result in a release of radionuclides to the environment. The initiating event analysis considers the range of potential hazards including those generated during DCSO as well as naturally occurring hazards (e.g., seismic).

The Initiating event analysis consists of the following three interrelated steps:

1. Literature Search
2. Hazard Identification Process
3. Screening and Grouping

16.1.2.1 Assumptions and Limitations

The following are a list of assumptions and limitations that define the scope and level of detail performed for this task.

- Internal and external hazards affecting the [XXXXXXXXXX] cask at the Vogtle site will be considered.

- The scope of the study begins when fuel assemblies begin to be loaded into the cask and ends with the cask being stored at the ISFSI.

- Other potential phases of cask operation such as unloading or transportation offsite will not be considered.

- The cask system is assumed to be fabricated as designed. Areas where flaws normally exist and can be well characterized, such as weld flaws, will be considered.

- Aging and corrosion effects will not be considered except when caused by an error in the process of loading the cask.

- Intentional sabotage is outside the scope of this study.

16.1.2.2 Inputs

The information required to perform the associated steps are identified in Table 16-3. This information is succinct and transparent in enabling an independent QA and peer review.

Table 16-3 Required Inputs for Subtask 5-1.2

Input	Description
Initiating events from previous DCS PRA	Previous DCS PRAs, such as EPRI TR- 1009691 [1] and NUREG–1864 [2], are reviewed to identify a list of generic initiating events
NRC NUREG and Regulatory issue summaries on load drops and crane failures	Documents to provide incidents involving crane and load drops such as control of heavy load in NUREG–0612 [3], Generic Issue (GI) 186 "Potential Risk and Consequences of Heavy Load Drops in Nuclear Power Plants," [4], and related regulatory issue summaries
DCS final safety analysis and relevant procedures	Information on the DCS design specifications, limitations, and associated procedures for the DCS operations and fuel movements

16.1.2.3 Analysis Steps

Initiating event analysis consists of three interrelated steps:

1. Literature Search
2. Hazard Identification Process
3. Screening and Grouping

The process to identify initiating events is similar to that used in the internal at-power Level 1 PRA. However, the goal here is to identify those hazards that affect the DCS instead of the reactor units. Nevertheless, similar discussions and guidelines as provided in the ASME/ANS RA-Sa-2009 PRA standard for internal events at-power are also applicable to DCS PRA.

Step 1 – Literature Search

The objective of literature search is to compile initiating events for dry casks that have been identified in the literature. Table 16-3 lists several sources of information. The DCSO related initiators are identified through a systematic evaluation of the entire dry cask storage process, from fuel handling events (e.g., during cask loading), the transport events (e.g., during cask transfer), and the on-site storage events (during cask storage and monitoring). The evaluation considers possible deviations from normal processing that might occur at each step of the

DCSO activities. Causes of deviations include equipment failures, human errors, natural phenomena, and other applicable hazards.

The most prevalent event in DCSO is a possibility of load drop during movement, due to equipment failure or human error. Reference [1] lists 31 possible initiating events for DCSO related activities and 36 events resulting from external hazards (e.g., seismic, high wind, flood, etc). Reference [2] lists a total of 51 events from all hazards and DCSO-related activities.

Step 2 – Hazard Identification Process

The objective of the step is to perform a formal hazard identification process such as a HAZOP or a Master Logic Diagram (MLD) to ensure that as many initiating events as possible have been identified. The MLD is in the form of fault tree. The MLD fault tree produces events or combination of events that could lead to initiation of release. The MLD fault tree considers events that could create conditions where the cask shielding or structural material characteristics are exceeded, leading to releases of radioactivity or increase in radiological consequences. Figure 16-5 shows a typical high level MLD fault tree for spent fuel cask operation [1].

Step 3 – Screening and Grouping

The objective of the third step is to screen events that could not affect the cask system, and to group the events that have similar mitigation requirements, in order to simplify the subsequent analysis. Each identified initiating events needs to be characterized in terms of its effect on the [XXXX] or its storage cask. The screening of initiating events will be limited to those hazards that do not lead to failure of the [XXXX] or its cask, or are within the scope of analysis. For example, an operator error leading to a fuel assembly drop in the spent fuel pool is not considered an initiating event for the DCS PRA, because such an event will be considered as part of the spent fuel pool PRA.

Following the screening process, the initiating events are grouped based on similar outcome, in mitigation and consequences. For example, cask loading with high burnup fuel, and cask loading with short-time decayed fuel, both of which results in a cask heat load conditions that could exceed the [XXXXX] design limit, can be grouped as a fuel loading error initiating event.

DRAFT

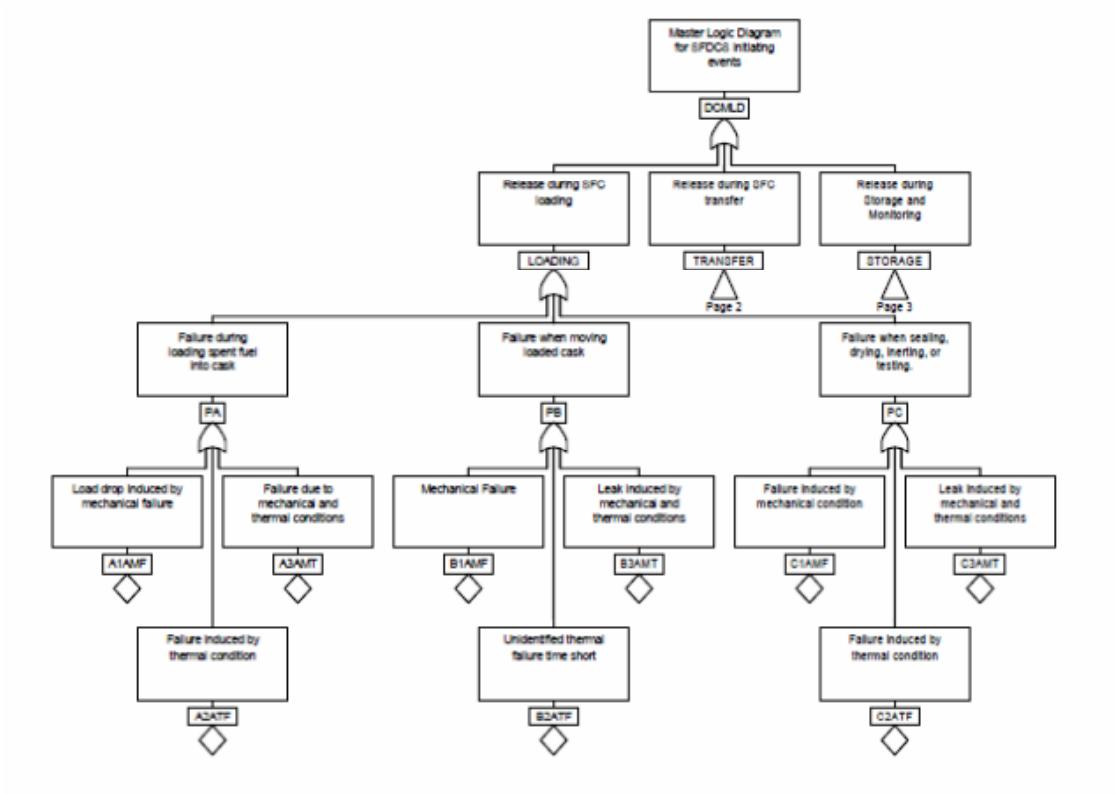

Figure 16-5 High-Level Master Logic Diagram for Phases and Cause

16.1.2.4 Documentation

Document the sources of information reviewed, any additional DCS-specific models used, and the basis for screening and grouping of initiating events. Table 16-4 provides details of the documentation requirement. The documentation (along with the identified inputs described in Section 16.1.2.2) is succinct and transparent in enabling an independent QA and peer review.

Table 16-4 Subtask 5-1.2 Documentation

Step	Description
Literature Search	Document and summarize the sources of information that were reviewed to collect all possible initiating events.
Hazard Identification Process	Document the process used to ensure that all possible initiating events are identified. Discuss any specific methods, (e.g., MLD, HAZOP, etc.) used for determination of additional initiators based for the DCS systems and related operational phases (i.e., loading, transfer, and storage).
Screening and Grouping	Document the basis for screening-out initiating events, the basis for grouping and subsuming initiating events, and the dismissal of any observed initiating events, including any credit for recovery. Provide the final list of initiating events in a tabular format, with sufficient information to facilitate QA and/or peer review.

16.1.2.5 Task Interfaces

The initiating event analysis subtask interfaces with Subtasks 5-1.3 through 5-1.5. It also interfaces with Subtask 5-1.1 for the review of the DCS and operational procedures. Figure 16-4 provides a high-level interface between each subtask.

16.1.3 Subtask 5-1.3: Data Analysis

Data analysis consists of determining the probability and frequency of occurrences of the various events modeled in the DCS PRA. These are identified in the initiating events analysis as well as those identified in the accident sequence analysis. The component failure probabilities and initiating event frequencies are determined using both generic and plant-specific information, if available. Data analysis consists of three interrelated steps namely, determining (1) the frequency of initiating events, (2) component reliability (or failure probability), and (3) common cause failure (CCF) probabilities. The first step quantifies the frequency of each group of initiating events identified in the initiating event analysis subtask (refer to Section 16.1.2). The second step determines plant-specific estimates of the unavailability of specific equipment. The third step determines the final values to be used in the parametric models of common-cause failures. Additional guidance on parameter estimation is given in NUREG/CR-6823 [5].

The process for data analysis is similar to that used in the Level 1 PRA for Internal at-power. However, the goal here is to identify those hazards that affect the DCS instead of the reactor. Nevertheless, similar discussions and guidelines as provided in the ASME/ANS RA-Sa-2009 PRA standard for internal events at-power are also applicable to this subtask.

16.1.3.1 Assumptions and Limitations

The following are a list of assumptions and limitations that define the scope and level of detail performed for this task.

- Site-specific data will be used, if available

- Generic data referenced in the previous studies and listed in Section 16.1.2 will be used when plant-specific data is not available

16.1.3.2 Inputs

The information required to perform the associated steps are identified in Table 16-5. This information is succinct and transparent in enabling an independent QA and peer review.

Table 16-5 Required Inputs for Subtask 5-1.3

Input	Description
Generic and plant-specific data and specifications	Generic and plant-specific data on load drop, crane failure, component failure, etc. Specifications on the following: • Crane specifications (failure data for specific model if available) • Refueling building structural specifications (also including seismic event frequencies) • Transporter specifications (failures if available: cask drop and tip-over and operator errors) • Cask design specifications ([XXXXXXXXXX] FSAR) • High Temperature Fire: Fire Zones and sources close to cask hauling route or ISFSI • Site-specific external hazards

16.1.2.3 Analysis Steps

Data analysis consists of the following steps:

1. Frequency of initiating events
2. Component reliability
3. Common cause failure probabilities

Step 1 – Frequency of Initiating Events

The objective of this step is to quantify the frequency of each group of initiating events identified in the initiating event analysis subtask (Section 16.1.2). It is desired that the frequencies be expressed in the form of uncertainty distributions and that the determination of the frequencies take advantage of all relevant evidence. The goal of this step is to develop a probabilistic description of the frequency of the initiating events of interest along with supporting documentation.

The frequency of initiating events can be either based on generic data, or can be calculated using logic models (i.e., fault trees). For the DCSO related initiating events, such as cask handling and load drop, it is more appropriate to use a fault tree model to calculate the frequency of potential load drop per demand. It could be more accurate and provide more insight. The analysis must account for both the reliability of the lifting equipment (e.g., crane, yoke, etc.) and the reliability of workers to rig the transfer cask and operate the crane. A fault

tree analysis of the crane equipment must be based on detailed design and operational information (i.e., lift heights, lift speeds, lift times, movements of the bridge, and movements of the trolley). The model should include human performance issues relevant to dry cask storage operations. Development of human reliability issues related to DCS is provided in NUREG/CR-7016 [6], and is discussed further under Section 16.1.4.

Step 2 – Component Reliability

The objective of this step is to obtain plant-specific estimates of the unavailability of specific equipment used for DCS PRA quantification. The scope of this task is to develop the database needed for estimating the contributors to unavailability of the basic events modeled in DCS fault trees. It also includes development of component failure models, collection of generic and plant-specific component data, and estimation of the parameters of the component unavailability models. It is important that the component unavailability is expressed in the form of uncertainty distributions and that similar components be grouped in the same correlation class.

The general process for this step is to (1) determine the most appropriate level, scope, hardware boundary, and specifications for data collection; (2) establish the current knowledge on the parameters to be estimated by aggregating the various sources of generic data and the experience of similar plants; (3) identify the sources of plant-specific data to be retrieved, reduced, reviewed, and interpreted for the parameters of interest and establish the plant-specific data summary; and (4) combine plant-specific and generic data when appropriate to estimate the required parameters and to reflect the associated uncertainties.

Step 3 – Common Cause Failure Probabilities

The objective of this task is to determine the final values to be used in the parametric models of common-cause failures (CCFs). This would involve addressing a variety of issues starting with the definition of what should be considered as CCFs, how they should be modeled in the context of system fault trees, and finally how they are to be estimated using generic and plant-specific data. The CCF modeling is performed in two phases. For the first phase, CCF probabilities are estimated based on the applicable industry-wide CCF events. Subsequently, the plant models should be quantified, and the major CCF contributors identified. For those CCF events which significantly contribute to plant risk, further analysis is needed to justify that the CCF estimates are appropriate.

16.1.3.4 Documentation

The sources of data and methods used to determine initiating event frequencies, component reliability, and CCF are documented. Table 16-6 provides the details of documentation needs. The documentation (along with the identified inputs described in Section 16.1.3.2) is succinct and transparent in enabling an independent QA and peer review.

Table 16-6 Subtask 5-1.3 Documentation

Item	Description
Frequency of initiating events	Document the specific methods (i.e., generic or logic model or both) used to determine the frequencies for each group of initiating event. Identify sources of data (i.e., generic, plant-specific, or both) used. In addition, include sources of parameter and modeling uncertainties.

Item	Description
Component reliability	Document the sources of generic and plant-specific data and the component failure models used. Provide a summary of plant-specific failure events, a description of the statistical methods and software used in estimating failure parameters, and tables of both generic and plant-specific data that can be used to calculate the basic event probabilities used in the DCS PRA. Include any assumptions made in the analysis and identify sources of parameter and model uncertainties.
Common cause failure probability	Document the scope of CCF that was modeled including component types and grouping. It should identify the CCF parametric models that were used including the ways that it was incorporated in DCS fault trees. Identify plant-specific CCF rate including a description of approaches used in arriving at those estimates. These estimates would be utilized in the first phase analysis. Describe the risk significant CCFs identified through initial quantifications and the results of sensitivity and importance evaluation and used for the refined CCF estimates for the second phase analysis and final quantification. Identify the final set of CCF rates generated through the second phase analysis for use in the final quantification.

16.1.3.5 Task Interfaces

The data analysis interfaces with the following subtasks (see Figure 16-4):

- All steps require information from initiating event subtask.
- The data analysis subtask provides input to human reliability analysis, accident sequence analysis, and success criteria subtasks.

16.1.4 Subtask 5-1.4: Human Reliability Analysis

Section 7 describes the human reliability analysis (HRA) task, in general. For dry cask PRA, in particular, substantial qualitative HRA work (for many operational phases) is provided in the following resources:

- NUREG/CR-7016, *Human Reliability Analysis-Informed Insights on Cask Drops,* February 2012
- NUREG/CR-7017, *Preliminary, Qualitative Human Reliability Analysis for Spent Fuel Handling,* February 2012

Selection of an appropriate HRA quantification method will be based on the human performance issues identified in the HRA qualitative analysis, as recommended in NUREG-1842 (i.e., NRC's Evaluation of HRA Methods Against Good Practices).

16.1.5 Subtask 5-1.5: Success Criteria (Structural and Thermal Analysis)

The success criterion for dry storage is the prevention of any failure of the DCS confinement (i.e., breach of [XXXXXXX]). The failure of confinement can be a direct result of the initiating event such as a drop (modeled in the structural analysis) or result of a high temperature event

such as a fire (modeled in the thermal analysis) that causes a breach of the containment boundary. Therefore, this subtask consists of the following two steps:

- Structural analysis
- Thermal analysis

16.1.5.1 Assumptions and Limitations

The following are a list of assumptions and limitations that define the scope and level of detail performed for this task.

- Site-specific data will be used if available. For the structural analysis this includes drop heights during cask movement (from loading to installation on the ISFSI pad), and external hazards (i.e., seismic, high winds, hurricanes, aircraft crash, and high temperature weather). For the thermal analysis this includes plant fire sources and fire zones, increased heat input due to misloading, external fires or explosions (adjacent facilities fires or explosions that could affect dry storage).

- Generic data referenced in the previous studies in Section 16.1.2 will be used when plant specific data is not available.

16.1.5.2 Inputs

The cask design features and specifications are required to perform structural and thermal analyses. Table 16-7 identifies the information to perform the associated steps. This information is succinct and transparent in enabling an independent QA and peer review.

DRAFT

Table 16-7 Required Inputs for Subtask 5-1.5

Input	Description
Site-Specific Data and Specifications	This data includes specifications on the following: • Cask Structural/Thermal Specifications – Information on the cask components and design specifications. This information is available in the cask FSAR and Reference 2. • ISFSI Specifications – Information on the physical properties of the storage pad (i.e., construction materials) to infer parameters needed in the analysis (e.g., friction factors) for cask tipover, due to a drop or an external hazard. • Plant Heavy Load Movement Path - This includes all drop heights. • Plant Fire Zones and Sources. • Transporter Specifications (including operation).

16.1.5.3 Analysis Steps

This section describes the steps that were were identified earlier.

Step 1 – Structural Analysis

The objective of this step is to determine the level of stress/strain that could result from the identified initiating events leading to breach of [XXXXXXXXXXXXXXXXXXXXXXXXXX].

To evaluate the structural behavior of the transfer cask and storage cask for the postulated initiating events, simplified and conservative analyses can be used. The analysis methods may include hand calculations based on first principles, common analytical methods and industry recognized approaches (e.g., fragility analysis), and use of the differential equations of motion for which closed form solutions are obtained. When an analysis requires complex computer codes and large amounts of resources, existing calculations performed by cask manufacturer ([XXXXXXXXXX]) and reviewed by NRC staff for cask certification can be used. Additional independent analysis can be performed using LS-DYNA computer code, a non-linear dynamic impact analyses code [7]. The loads and stresses calculated for the final list of initiating events are used to determine the probability of failure of the [XXXXXXXX], and the transfer cask.

Structural analyses performed for the [XXXXXXXXXXXXXXXX] can be adapted for the determination of the [XXXXXX] and transfer cask failure for various drop heights, drop orientations (i.e., side drop, end drop, or corner drop), and other external loads.

Step 2 – Thermal Analysis

The objective of this step is to determine the thermal loads that could results from the initiating events involving cask heat-up (i.e., fire or misloading).

The information on the cask thermal analysis is available from the cask FSAR and the corresponding NRC safety evaluation report. For [XXXXXXXX], [XXXXXXXXX] has performed cask heat-up analyses during normal operation, blocked vent and fire. This analysis,

[XXXXXXXXXXXXXXXXXXXXXXXXX], provides a heat-up model for the storage cask. The analysis concluded that [XXXXXXXXXXXXXXXXXXXX]. For events involving external fire, the effect of thermal load on the [XXXXXXXXX] and fuel is determined. The results of thermal analyses from a 3-hour fire concluded that even though there could be some fuel failure due to high temperature, the [XXXXX] is not expected to fail [XXXXXXX].

16.1.5.4 Documentation

The sources of data and methods used to determine cask structural and thermal responses to initiating events are documented. Table 16-8 provides the details of documentation needs. The documentation (along with the identified inputs described in Section 16.1.5.2) is succinct and transparent in enabling an independent QA and peer review.

Table 16-8 Subtask 5-1.5 Documentation

Item	Description
Structural analysis	For each initiating event document the method used for determining the cask response and its effect on the [XXXXX] and fuel failure, as applicable. The discussions may include appropriate reference to the applicable analyses in [XXXXXXXXXX], as appropriate. Identify sources of parameter and model uncertainties.
Thermal analysis	For each initiating event document the method used for determining the cask response and its effect on the [XXXX] and fuel failure, as applicable. The discussion may include appropriate reference to the applicable analyses in [XXXXXXXXX], as appropriate. Identify sources of parameter and model uncertainties.

16.1.5.5 Task Interfaces

This subtask interfaces with initiating event analysis, and cask description and operational phase subtasks. Figure 16-4 provides a high level Interface between each subtask.

16.1.6 Subtask 5-1.6: Accident Sequence Analysis and Quantification

The accident sequence analysis consists of a logic structure to develop and quantify the sequence of events that result in radionuclide release. The accident sequence logic (i.e. fault trees) combines initiating events and the corresponding conditional cask failure probabilities from structural and thermal hydraulic analyses. The result of accident sequence analysis is a listing of accident sequences that result in radionuclide release (cask failure) and their associated occurrence frequencies.

This subtask consists of the following three steps:

1. Development of event sequence logical structure (i.e. event trees)
2. Development of top event logic for integrating initiating events with basic events (i.e. fault trees)
3. Generation and quantification of accident sequences

The process for accident sequence analysis and quantification is similar to that used in the Level 1 PRA for internal hazards at-power. However, the goal here is to determine accident sequences that are generated during DCSOs. Nevertheless, similar discussions and guidelines as provided in the ASME/ANS RA-Sa-2009 PRA standard for internal events at-power are also applicable here.

16.1.6.1 Assumptions and Limitations

The following are a list of assumptions and limitations that define the scope and level of detail performed for this task.

- The end-state for this subtask is cask/[XXXXX] and fuel failure leading to release of radionuclides.

16.1.6.2 Inputs

The required inputs include a list of final initiating event frequencies, human error probabilities and conditional cask failure probabilities. Table 16-9 identifies the information required to perform this subtask. This information is succinct and transparent in enabling an independent QA and peer review.

Table 16-9 Required Inputs for Subtask 5-1.6.

Input	Description
Final list of initiating events	Information on initiating event frequencies, component reliability, human error probability and conditional cask confinement failure probabilities are needed for quantification of accident sequences.
Initiating event frequency, component reliability and CCFs	
[XXXXXX] and cask failure probabilities	
Human error probabilities	

16.1.6.3 Analysis Steps

This section describes the steps that were were identified earlier.

Step 1 – Development of Event Tree

The objective of this step is to develop a logic model that captures the sequences of events that leads to cask failure and release of radionuclides.

Cask confinement, in this case provided by the [XXXXX], is the main safety function for a dry storage cask. It provides critically control, pressure control, decay heat removal, as well confinement. Therefore, the success criterion for DCS is prevention of a breach of this confinement leading to radionuclide releases. The top events for the accident sequences consist of cask primary confinement as well as those features that impact the potential for, and magnitude of, the radionuclide releases. Those features include, spent fuel cladding, building integrity (if the accident occurs within the building), and recovery/mitigation actions (i.e., reducing the release to the environment through isolation and/or filtered release). Alternatively, one can assume that there are no mitigations, and building confinement does not exist, or is

ineffective. Considerations have been given to both of these top events in the DCS PRA. Reference [2] considered both the building confinement and filtered release. Reference [1] used a simplified event tree as shown in Figure 16-6.

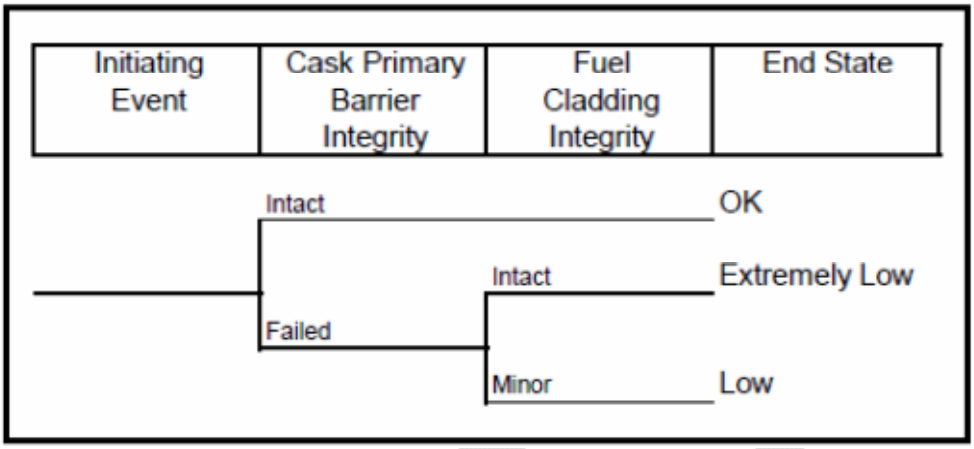

Figure 16-6 Simplified Accident Sequence Event Tree

Step 2 – Development of Top Events Logic Model

The objective of this step is to develop a logic model that represents the top events for each group of initiating events.

The logic model is developed for the top events in the event tree. The logic model (fault tree) combines initiating events, and the corresponding conditional cask failure probabilities from structural and thermal analyses. The structural integrity of the fuel cladding will be analyzed (References [1] and [2]) during structural or thermal events.

Step 3 – Generation and Quantification of Accident Sequences

The accident sequence cut-sets are generated from the logic model. Previous DCS PRAs indicate that the accident sequences are mostly dominated by human error resulting in a load drop. Human action dependencies are identified in Subtask 5-1.5, and reflected in the quantification of the initiating event frequencies.

16.1.6.4 Documentation

The process to develop and quantify accident sequences is documented. Table 16-10 provides the details of documentation needs. The documentation (along with the identified inputs described in Section 16.1.6.2) is succinct and transparent in enabling an independent QA and peer review.

Table 16-10 Subtask 5-1.6 Documentation

Item	Description
Accident sequence analysis and quantification	Document the process used to develop accident sequences and treat dependencies in accident sequences, including the inputs, methods, and results. Include a discussion of the linkage between the modeled initiating events, success criteria (structural/thermal analysis), and the accident sequence model. Provide a description of the accident progression for each sequence or group of similar sequences. Identify the operator actions reflected in the sequence specific timing and dependencies that are identified in the HRA subtask for these actions. Document the results of the quantification including sensitivity analyses, the accident sequences and their contributing cutsets, the total cask damage frequency and the contributions from different initiating events, and records of the cutset review process. Identify the various computer codes used to perform the quantification.

16.1.6.5 Task Interfaces

The subtask interfaces with the initiating events analysis, data analysis, human reliability, and success criteria subtasks for the required inputs. This subtask interfaces with the uncertainty analysis and consequence analysis (radionuclide release analysis). Figure 16-1 provides a high level Interface between each subtask.

16.1.7 Subtask 5-1.7: Uncertainty Analysis

The uncertainty analysis consists of determining the variability of the results of the events modeled in the DCS PRA. The process for performing uncertainty analysis is similar to that provided in Section 11 of this report. Under each subtask the sources of parameter and model uncertainties are identified. The uncertainties are then propagated for each accident sequence, or group of sequences, using a Monte Carlo or a similar method.

16.1.7.1 Assumptions and Limitations

Uncertainty analysis is an integrated process that includes the initiating events, human reliability, data analysis, and the associated structural/thermal response analysis. Therefore, all assumptions and limitations listed for the aforementioned analyses are applicable.

16.1.7.2 Inputs

The inputs for the uncertainty analysis are the identified sources of parameter and model uncertainties in the previous subtasks.

16.1.7.3 Analysis Steps

The uncertainty analysis steps are similar to those identified in Section 11 of this TAP (see Section 11).

16.1.7.4 Documentation

Table 16-11 provides the details of documentation needs. The documentation (along with the identified inputs described in Section 16.1.6.2) is succinct and transparent in enabling an independent QA and review.

Table 16-11 Subtask 5-1.7 Documentation

Item	Description
Uncertainty analysis	Document the quantification process for uncertainty analysis, and provide the uncertainty distribution for the total cask failure frequency.

16.1.7.5 Task Interfaces

The uncertainty analysis interfaces with accident sequence analysis and quantification subtask. Figure 16.4 provides a high level Interface between the various subtasks.

16.2 Task 5-2: Dry Cask Storage PRA for Health Effects (Consequence Analysis)

This task is divided into two subtasks:

1. Subtask 5-2.1 – Radionuclide release (source term)
2. Subtask 5-2.2 – Consequence analysis

16.2.1 Subtask 5-2.1: Radionuclide Release

This subtask estimates the release of radionuclides for each of the potential accident scenarios developed in the accident sequence analysis and quantification subtask. This subtask consists of three steps:

1. Estimation of radionuclide inventory within the cask
2. Estimation of the degree of fuel damage (from structural or thermal analysis)
3. Estimation of the amount and characteristic of airborne material within the cask and into the environment

16.2.1.1 Assumptions and Limitations

The radionuclide inventory within a cask is assumed to be based on the cask design fuel burnup and fuel decay time. This may be conservative for first batches of spent fuel movements to DCS. This is because the early batches will include old spent fuel with long decay times in the spent fuel pool. Eventually, the cask could be loaded with the design limit fuels. SCALE Computer code will be used if further analysis is needed for criticality safety or inventories.

16.2.1.2 Inputs

The radionuclide release inventory is required to perform DCS-related consequence analysis. Table 16-12 identifies the information to perform the associated steps. This information is succinct and transparent in enabling an independent QA and review.

Table 16-12 Required Inputs for Subtask 5-2-1

Input	Description
Cask radionuclide inventory	Design inventory limit inside the cask based on the FSAR fuel design limits on heat load and burnup.
Structural and thermal load responses	Estimates of potential failure modes (pinhole, rupture, etc.) of the spent fuel from the structural and thermal analysis response. The structural integrity of the fuel cladding will be analyzed (References [1] and [2]) during structural or thermal events.
Spent fuel gaseous and particulate release fractions	Methods to estimate the release fractions from the spent fuel given the initiating event resulting impact load or a heat load. Sources of information include NUREG/CR-6672 [8], EPRI DCS PRA [1], NRC DCS PRA [2], SAND-90-2406 [9], and NUREG/CR–2125 [10].

16.2.1.3 Analysis Steps

A description of the three steps identified earlier follows.

Step 1 – Estimation of Radionuclide Inventory within the Cask

The objective of this step is to estimate the radionuclide inventory within a DCS. This data can be obtained by considering the cask design limit on spent fuel burnup and decay time and number of fuel assemblies within a cask. This assumption is conservative for the early batches of spent fuel movement, because the oldest fuel is expected to be moved first. Nevertheless, the cask can contain the design limit of short-time decayed fuels.

Step 2 – Estimation of the Degree of Fuel Damage

The objective of this task is to estimate what fraction of fuel rods could be damaged in an accident. The degree of fuel damage within a cask is a function of impact force and/or thermal loading experienced during an accident. Both the NRC and industry have performed a series of analysis to determine the risk of storing spent fuel in DCS [1, 2]. The various studies sponsored by the NRC have documented the estimates of potential fuel failure and radiological releases in a hypothetical transportation cask accident. Among these, the most applicable to this study are: NUREG/CR–4829, or Modal Study [11], structural and confinement evaluation, SAND-90-2406, known as the Sanders report [9], the reexamination of spent fuel shipment risk estimate, NUREG/CR-6672 [8], and a recently published draft NUREG/CR–2125 [10]. In all these studies, estimates of release fractions conditional on accident severity are provided.

One notable observation from the Sanders study [9] is that failure probability of a fuel rod inside a cask resulting from a 9-meter drop onto an unyielding surface under various orientations to range between 6.0E-10 to 2.0E-4. The study used two fuel cladding material properties, material ductility and fracture toughness, to determine tearing from excessive strain and extension of a generated or pre-existing partial crack in the fuel rod cladding, respectively. The higher estimate is for a potential of causing a longitudinal slit in fuel rods with pre-existing, part-wall crack due to fuel-pellet clad interaction. The lower estimate is for a potential of causing pinhole fuel rod ruptures for rods with no pre-existing faults.

Step 3 – Estimation of the Amount and Characteristic of Airborne Material within the Cask and to the Environment

The objective of this step is to estimate the fraction of various gaseous and particulate radionuclides that could be released from the damaged fuel to into the cask and the environment. In accident conditions causing fuel rod cladding failure, depressurization of the fuel rod would cause gaseous (noble gases and volatile) fission products, and particulates (fuel fines) to be released within the cask. The release of gaseous materials and suspension of particulates depends, in a complex manner, on the physical properties of the material and its confinement and on the nature of stress (thermal and mechanical) impacting the system. As a consequence of this complexity, theoretical prediction of airborne release fraction (ARF) and respirable fraction (RF) would not be possible. Selection of values for these parameters instead would be based on review of experimental data on the spent fuel, magnitude of stresses acting on the spent fuel, and selection of the most applicable data for the expected conditions.

Comprehensive reviews of data related to release of radioactive material are available in NUREG/CR-6410 [12], DOE-HDBK-3010 [13], SAND-90-2406 [9], and NUREG/CR-6672 [8]. Additional information on estimating spent fuel release fractions are provided in References [1] and [2].

16.2.1.4 Documentation

The process to develop radionuclide release inventory is documented. Table 16-13 provides the details of documentation needs. The documentation (along with the identified inputs described in Section 16.2.1.2) is succinct and transparent in enabling an independent QA and review.

Table 16-13 Subtask 5-2.1 Documentation

Item	Description
Radionuclide release to the environment	Document the method used to estimate the radionuclide releases to the environment. Identify all information and sources of data used, including specific assumptions, and any computer models used. Provide the results in a tabular format indicating the material at risk, fuel damage ratio, cask retention factors, and gaseous and particulate release fractions inside the cask and to the environment.

16.2.1.5 Task Interfaces

The radionuclide release analysis interfaces with subtask accident sequence analysis and quantification. Figure 16-4 provides a high level Interface between the subtasks.

16.2.2 Subtask 5-2.2: Consequence Analysis

The process for performing consequence analysis is similar to that provided in Section 12.3, “Task 1-3: Level 3 Reactor PRA, At-Power for Internal Hazards.” Subtasks 1-3.2 through 1-3.9 in Section 12.3 are common to all consequence analysis sections of this report. The only variance to these sections is the additional review of road network availabilities after severe external event hazards such as seismic and external floods, the initiating events and accident progression affecting the emergency action levels for emergency response and the end state

frequency weighting as an input to the overall consequence analysis. Discussions provided above under Subtask 5-2.1 supplement the analysis steps provided for Subtask 1-3.1 in Section 12.3. Therefore, no further discussions are provided.

16.3 References

1. "Probabilistic Risk Assessment (PRA) of Bolted Storage Casks: Updated Quantification and Analysis," EPRI Technical Report No. 1009691, December 2004.
2. "A Pilot Probabilistic Risk Assessment of a Dry Cask Storage System at a Nuclear Power Plant," NUREG-1864, March 2007.
3. "Control of Heavy Loads at Nuclear Power Plants, Resolution of Generic Technical Activity A-36," NUREG-0612, July 1980.
4. Generic issue 186 "Potential Risk and Consequences of Heavy Load Drops in Nuclear Power Plants."
5. "Handbook of Parameter Estimation for Probabilistic Risk Assessment," NUREG/CR-6823, September 2003.
6. "Human Reliability Analysis-Informed Insights on Cask Drops," NUREG/CR-7016, February 2012.
7. "LS-DYNA User's Manual," vols. 1 & 2, Version 960, 2001.
8. "Reexamination of Spent Fuel Shipment Risk Estimates," NUREG/CR-6672, March, 2000.
9. "A Method for Determining the Spent-Fuel Contribution to Transport Cask Containment Requirements," SAND-90-2406, 1992.
10. "Spent Fuel Transportation Risk Assessment," NUREG-2125 (draft for comment), May 2012.
11. "Shipping Container Response to Severe Highway and Railway Accident Conditions," NUREG/CR-4829, June 1987.
12. "Nuclear Fuel Cycle Facility Accident Analysis Handbook," NUREG/CR-6410, March 1998.
13. "Airborne Release Fractions/Rates and Respirable Fractions for Nonreactor Nuclear Facilities," DOE-HDBK-3010, October 1994.

DRAFT

17. Technical Approach for Integrated Site PRA

[TO BE COMPLETED – See Attachment A for related viewgraphs]

DRAFT

18. Quality Assurance

Quality assurance (QA) is a key factor in any analysis to ensure and demonstrate the technical acceptability of the analysis and probabilistic risk assessment (PRA) model fidelity. The objective of QA is to ensure that both the technical approach (methods, tools, data) is appropriate, and that implementation of the technical approach is appropriately performed. To achieve this objective, QA involves the following five major elements:

- Use of established methods, tools and data
- Qualified personnel
- PRA model configuration control
- Technical review of the methods, tools, data, and developed models
- Documentation control

18.1 Established Methods, Tools and Data

The PRA model will generally be based on state-of-practice methods, tools (e.g., computer codes) and data, that is, those that have been established and accepted (including verification and validation where applicable) in the risk community (i.e., NRC and industry). Examples of sources include:

- Consensus standards
- Internal and external guidance documents
- Accepted generic SSC performance data (where plant specific data is not available)
- Validated codes

For each technical task[21], the method, tools and data being used will be documented along with the basis for their acceptability (e.g., NRC endorsement). This documentation is identified in each technical task in Sections 4 through 17 of this report and described in Section 18.5.

18.2 Qualified Personnel

Qualified individuals are needed to perform the work. Their qualifications depend on whether the analyst is (1) a performer or (2) a reviewer.

A performer is an individual who develops some aspect of the PRA model. Their role, either as a team leader, a task leader, or an analyst will need to have some level of expertise. Certainly, an analyst can develop the qualifications with on the job training; however, the task and team leaders need to be more experienced personnel who bring actual experience in the area they are leading. If an analyst has little to no experience, their work will be closely supervised and monitored by their task leader. PRA consensus standards and Regulatory Guide (RG) 1.200[22] do not prescribe qualifications for the team performing the actual work. Moreover, one of the major objectives of the Level 3 PRA project is to train inexperienced staff in how to construct a PRA model.

[21] Technical tasks are the technical steps that will be performed to accomplish the technical element.
[22] Regulatory Guide1.200, "An Approach For Determining The Technical Adequacy Of Probabilistic Risk Assessment Results For Risk-Informed Activities," Revision 1, U.S. Nuclear Regulatory Commission, Washington, DC, January 2007.

A reviewer is an individual who has some role in reviewing the actual work and making judgments with regard to its technical acceptability. In this regard, these individuals must have a certain level of expertise and on the job training is not acceptable. Both RG 1.200 and the PRA standards provides peer review personnel qualifications. These requirements should be met unless otherwise justified.

18.3 PRA Model Fidelity

Ensuring that the analysts are using the same information and same models and that the reviews are being performed on the most recent model and documentation is important in ensuring the fidelity of the PRA model. Developing a PRA model involves numerous tasks being performed by many different analysts. It is, therefore, essential that the information collected and the models developed for this project be controlled so that all of the analysts use the same information and models. The control of the developed models is discussed in this section. The control of information is discussed in Section 18.5.

The Idaho National Laboratory (INL) will host and maintain the SAPHIRE-based models developed as part of the Level 3 PRA project. INL will provide the necessary technical management and oversight to ensure efforts by INL or NRC staff (including work performed by other NRC contractors and provided to INL by the NRC) to create, revise or otherwise modify the Level 3 PRA project models are coordinated and the models are properly integrated. These model enhancements may include the creation, addition, revision or other modification of a low-power/shutdown model, all-hazards model (e.g., fire, external flooding, seismic, etc.), Level 2 PRA model, multi-unit model, spent fuel pool model, or other extended model applicable to the construct of the overall Level 3 PRA project model.

To the extent practicable, the methodology, quality, and philosophy used to develop the current set of Standardized Plant Analysis Risk (SPAR) models for the 104 operating commercial nuclear power plants will be used to develop the external event model, low-power/shutdown model, extended Level 1 PRA model, and Level 2 PRA model for the Level 3 PRA project. This includes model construct, event nomenclature, assumptions, preferred technical positions, and other key aspects of the existing models to allow NRC staff the ease of use of the models.

INL will identify a single point of contact to act as the Level 3 PRA project model coordinator ("Coordinator"). The Coordinator will maintain a log and track all permanent revisions to the model including the reason for the revision, assumptions, deviations from preferred technical positions, and any other information deemed important to understanding the model or the revision to the model. The Coordinator will ensure that the appropriate model revision is being used and that the effort results in a properly integrated model. The Coordinator will also coordinate INL model integration activities. Version control software, suitable to this task and with sufficient documentation capabilities, may be used by INL, subject to approval by the NRC staff.

When multiple revisions to the enhanced Vogtle model are planned by INL or NRC staff, INL will coordinate the activities of the different modelers. This is to ensure that the model developers use the appropriate model version(s) and that the final product does not include models that were constructed based on an obsolete model version.

INL will also perform quality control (QC) and quality assurance (QA) reviews of the new or revised models. This is to ensure that the model represents the as built, as operated plant to

the extent practicable. The same quality assurance criteria and processes used for the existing SPAR models shall be used to review the Level 3 PRA project models. This includes (as appropriate) satisfying the criteria and processes in the *Standardized Plant Analysis Risk (SPAR) Model Quality Assurance Plan*,[23] the latest approved INL QC/QA processes, applicable sections of Volume 3 of the *RASP Handbook*,[24] *RG 1.200*, and other applicable guidance.[25]

18.4 Technical Review

In ensuring technical acceptability, different types of review will be performed. These include:

- review by a Technical Advisory Group
- internal self-assessment
- external peer review
- review by the Advisory Committee on Reactor Safeguards

Each of these reviews has different objectives and scope which are described below.

18.4.1 Technical Advisory Group

The objective of the Technical Advisory Group (TAG), as specified in the TAG charter,[26] is to: (1) review progress in the development of the Level 3 PRA, and (2) provide insight, advice, and guidance on (a) the technical bases, tools, methods, models, and data for the project, (b) the interpretation of the results of the various PRA models and the overall PRA model, (c) the resolution to the self-assessment, and (d) the response to comments received from the external peer reviews of the study. In this role, the TAG will serve as an ongoing review team that will provide review and feedback as the project progresses.

As stated earlier, the approach used for the Level 3 PRA project will be based on plant information and established methods, tools and data. Where the plant information or the methods, tools or data do not exist to develop certain aspects of the PRA model, other sources such as expert opinion will be used. The TAG will play a key role in addressing the acceptability of such proposed approaches. Furthermore, it is expected that the TAG will play a fundamental role in resolving technical or programmatic issues that may arise.

In its review responsibility, the TAG will review the TAAP to provide feedback on the approach being used to perform the work. Moreover, the TAG will review the results of the project team self-assessments to provide an independent assessment of the work performed.

The TAG will consist of senior technical staff in the area of PRA, and in supporting technical areas (e.g., seismic hazard and plant response), as well as an experienced PRA representative from the Electric Power Research Institute and from industry. RES/DRA staff will chair and coordinate the TAG, which will meet periodically. The TAG Chairman will be responsible for leading and moderating the TAG meetings, and will serve as the TAG spokesperson, as

[23] "Standardized Plant Analysis Risk (SPAR) Model Quality Assurance Plan," Revision 0, U.S. Nuclear Regulatory Commission, Washington, DC, September 2006 (not publicly available).
[24] "Risk Assessment of Operational Events Handbook, Volume 3 – SPAR Model Reviews," Revision 1, U.S. Nuclear Regulatory Commission, Washington, DC, September 2007 (not publicly available).
[25] For example: American Nuclear Society, "American National Standard External-Events PRA Methodology," ANSI/ANS-58.21-2003, December 2003.
[26] Charter for the Technical Advisory Group on the Full-Scope Site Level 3 Probabilistic Risk Assessment Project, ADAMS Accession Number ML120410123 (not publicly available).

necessary, in briefings to NRC and project management. The TAG Coordinator, in consultation with the Level 3 PRA Project Program Manager and the TAG Chairman, will develop and disseminate the agenda for each TAG meeting. The TAG Coordinator will also be responsible for organizing and recording the minutes of the TAG meetings and maintaining an electronic repository to provide reports, publications, and other technical information as background for all TAG meetings.

Table 18-1 provides a template for the TAG review documentation. This template (or a similar documentation format) is to be used to document the results of the TAG reviews performed for the Level 3 PRA project.

DRAFT

Table 18-1 TAG Review Documentation Template

SR	Finding	Level of Significance and Basis	Recommended Resolution	Implemented Resolution
Reviewer:			Responsible Analyst:	
Risk Source:		Hazard: [e.g., internal events]		Level: [1, 2 or 3]
Technical Element:				Date:
	Reactor, Spent Fuel Pool, Dry Cask Storage, Integrated Risk			
	Describe the finding, what is the issue, why it is a concern; explanation needs to clearly explain the concern and the basis for the concern.	The level of significance of the concern should be listed including the basis for level of significance assessed; see below for explanation of significance.	Describe the recommendation to resolve the concern; the explanation needs to be sufficiently detailed so that the analyst understands what needs to be revised in the PRA to resolve the concern.	Analyst describes the response to the finding and recommendation, describing how it was resolved; the explanation should not be just an "accept," but an explanation of exactly how it was resolved (e.g., how the PRA model was revised).
	List the applicable supporting requirement (SR) using the standard index number; if an SR is not applicable, then use the technical element 2 to 4 digit abbreviation (xxxx) and the finding numbered sequentially (yy) with an "T" (i.e., xxxx-yy-T). If criteria were developed and used, then reference the criterion number (see Table 18-2).			

- High Significance -- An issue needing resolution to ensure the technical adequacy of the PRA, the capability of the PRA, or the robustness of the PRA update process.
- Medium Significance -- An issue whose resolution is needed to maintain maximum flexibility in PRA applications and consistency with Industry practices (as endorsed by the NRC) or simply to enhance the PRA's technical capability as time and resources permit. It is unlikely that the technical adequacy of the PRA is impacted.
- Low Significance -- An issue that does not impact the technical adequacy of the PRA.

18.4.2 Internal Self-Assessment

The objective of the internal self-assessment is to further ensure the technical acceptability of the work as the PRA model is being developed. The PRA model will be developed based on established and accepted methods, tools, and data as documented in, for example, consensus standards and guidance documents. For each technical element, a review of the work is performed using the process described below.

The full-scope site Level 3 PRA model consists of models developed by the SNC for Vogtle Units 1 and 2, and those developed internally by the NRC. Parts of the Vogtle PRA model have

received an industry peer review, using the ASME/ANS Level 1 PRA Standard.[27] The self-assessment process will take advantage of the industry peer review. Figure 18-1 provides the process for self-assessment. This process involves 9 steps as discussed below.

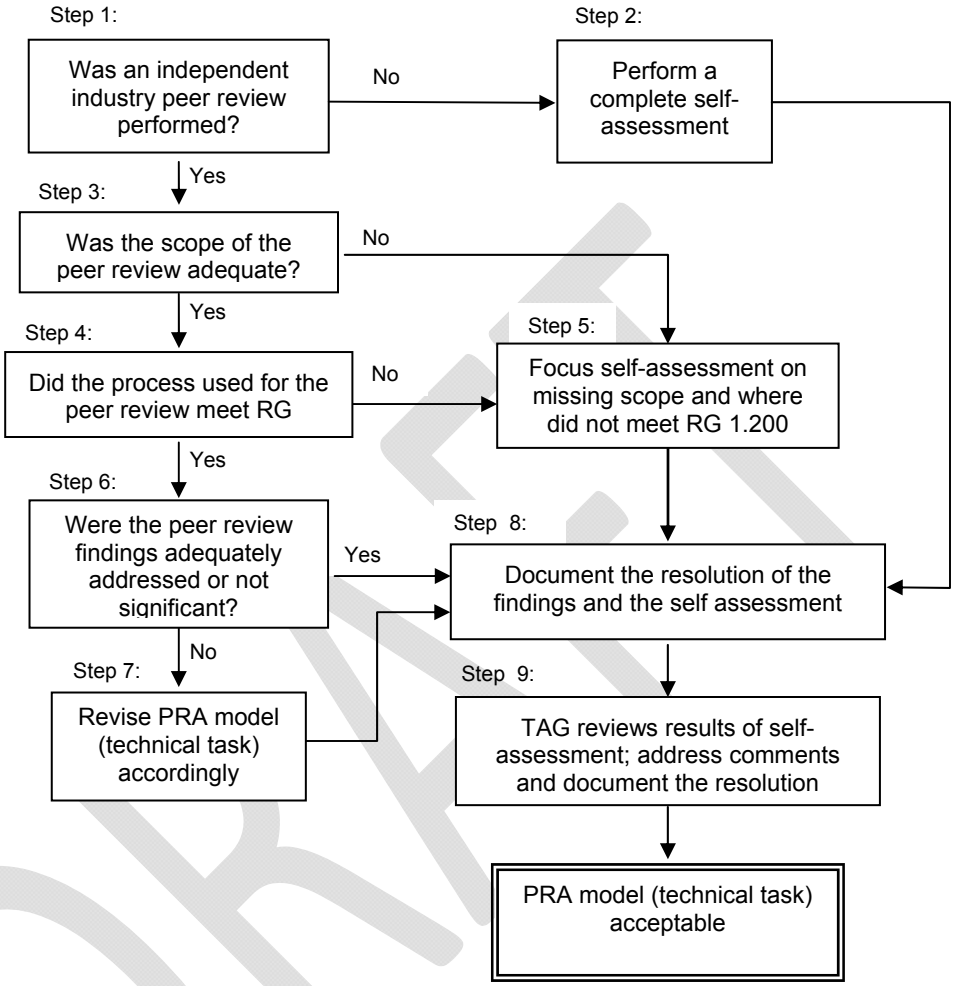

Figure 18-1 Process Used for Self-Assessment

Generally the self-assessment is performed by the technical element leader, responsible analyst, or may be performed by an internal NRC "team." If the work is performed by a contractor, the self-assessment is performed by an NRC team (with contractor support). The purpose of using an NRC team instead of the contractor to perform the self-assessment is for the NRC to have ownership of the work; that is, to understand the details of constructing the model.

In Step 1, the self-assessment reviewer (or team) determines whether an independent industry peer review was performed. This decision will determine the scope of the self-assessment; that is, the analyst is determining whether the self-assessment can take advantage of the

[27] ASME/ANS RA-Sa-2009, "Standard for Level 1/Large Early Release Frequency Probabilistic Risk Assessment for Nuclear Power Plant Applications," Addendum A to RA-S-2008, ASME, New York, NY, American Nuclear Society, La Grange Park, Illinois, February 2009.

independent peer review performed on the Vogtle PRA. If an independent peer review was not performed, then the reviewer needs to perform a complete self-assessment (Step 2). If an independent peer review was performed, then the adequacy of the peer review needs to be assessed (Step 3).

In Step 2, the self-assessment is performed using the guidance in RG 1.200. As such, the self-assessment:

- Uses a set of desired PRA characteristics and attributes as the basis for review
- Uses a minimum list of review topics to ensure coverage, consistency, and uniformity
- Reviews PRA methods
- Reviews application of methods
- Reviews assumptions and assesses their validity and appropriateness
- Determines if the PRA represents as-built and as-operated plant
- Reviews results of each PRA technical element for reasonableness
- Reviews PRA maintenance and update process
- Reviews PRA modification attributable to use of different model, techniques, or tools
- Reviews against modifications to the standard, if there is a standard

In evaluating the above, if a standard exists, then the requirements in the standard are used as the basis for the self-assessment in determining whether, for example, the desired attributes and characteristics provided in RG 1.200, Section 1 are met. If a PRA standard does not exist for a particular hazard or technical element, then criteria are developed to perform the self-assessment. These criteria are detailed enough to judge the technical acceptability of the work. They should be of consistent detail as in the standard for hazards or technical elements addressed by a standard. These criteria are documented using Table 18-2 (or a similar documentation format). Once the self-assessment (Step 2) is complete, the reviewer should go to Step 8 to document the results.

Table 18-2 Self-Assessment and Peer Review Criteria Where Standards Do Not Exist

Criteria #	Criteria	
Source of Risk:		Hazard:
PRA Level:		Technical Element:
	In numbering the criteria, use the technical element 2-4 digit abbreviation (xxxx) and the criteria numbered sequentially (yy) with a “C” (i.e., xxxx-yy-C).	

In Step 3, the reviewer identifies whether the scope of the peer review was adequate. If it is determined that the scope is inadequate then the reviewer should perform a self-assessment of the missing scope items (Step 5). If the scope of the peer review was adequate, then it needs to be determined if the peer review itself was adequate (Step 4).

In Step 4, the self-assessment reviewer determines if the industry peer review process meets the staff position in RG 1.200. To make this determination, the reviewer should:

- Review the findings for reasonableness.

- Perform spot checks using the guidance in RG 1.200. For example, one of the guidelines is "the peer review determines whether the methods were applied correctly."

In Step 5, the reviewer performs a focused self-assessment; that is, the reviewer evaluates the findings determined not to be reasonable. This focused self-assessment will follow the same process for a full self-assessment (Step 2). In addition, if it was determined from the spot checks that the guidance in RG 1.200 was not met, then the reviewer should perform a more thorough self-assessment against RG 1.200.

In Step 6, the reviewer determines if the findings from the peer review were addressed and if they appropriately addressed the issue. If the peer review findings were adequately addressed or were not adequately addressed but determined not to be significant to the PRA, then the reviewer goes to Step 8 to document the self-assessment. If the peer review findings are determined to not be adequately addressed and are significant to the PRA, then the reviewer needs to revise the PRA model to correct the issue (Step 7).

Significance can be determined both qualitatively and quantitatively, as follows:

Qualitative –

- The finding can result in changing the basic structure of the PRA model (e.g., success criteria such that the accident sequence progression is changed, different initiating events and/or frequencies, different human events and/or frequencies, different equipment failure probabilities).

Quantitative –

- Significant accident sequences are impacted. A significant sequence is one of the set of sequences, defined at the functional or systemic level that, when ranked, compose 95% of the core damage frequency (CDF) or the large early release frequency/large release frequency (LERF/LRF), or that individually contribute more than ~1% to the CDF or LERF/LRF.

- Significant basic event/contributors are impacted. Significant basic events (i.e., equipment unavailabilities and human failure events) are those that have a Fussell-Vesely[28] importance greater than 0.005 or a risk-achievement worth greater than 2.

In Step 7, the reviewer revises the PRA model to resolve the inadequacy. After the PRA is revised, the reviewer goes to Step 8 to document the self-assessment.

[28] Risk Reduction Worth: "The decrease in risk if a plant feature (e.g., system or component) were assumed to be optimized or were assumed to be made perfectly reliable. Depending on how the decrease in risk is measured, the risk reduction worth can either be defined as a ratio or an interval." Risk Achievement Worth: The increase in risk if a plant feature (e.g., system or component) was assumed to be failed or was assumed to be always unavailable. Depending on how the increase in risk is measured, the risk achievement worth can either be defined as a ratio or an interval. Sometimes risk achievement worth is referred to as "risk increase." Fussell-Vesely: For a specified basic event, Fussell-Vesely importance is the relative contribution of a basic event to the calculated risk. This relative or fractional contribution is obtained by determining the reduction of setting the probability of the basic event to zero. Birnbaum Importance: "An indication of the sensitivity of the accident sequence frequency to a particular basic event."

In Step 8, the reviewer documents the self-assessment using Tables 18-3 and 18-4 (or a similar documentation format). Table 18-3 can be generated using the ePSA Risk and Reliability software. This program populates some of the fields in the table automatically based on the ASME/ANS Level 1 PRA standard. For those parts of the PRA not covered by this standard, the ePSA software cannot be used, and the analyst will have to create the table using the template and the criteria developed and documented in Table 18-2. The purpose of Table 18-4 is to provide a high level summary of the conclusions of the self-assessment.

After Step 8, the initial self-assessment is complete.

DRAFT

Table 18-3 Self-Assessment Documentation Template

Section	Finding ID	Level	Cat II Requirement	Self-Assessment	Finding	Comment	Resolution

Table 18-4 Overall Results of Self-Assessment Process

#	Criteria	Conclusion	
Reviewer:		Responsible Analyst:	
Risk Source:		Hazard:	Level:
Technical Element:			Date:
Vogtle Industry Peer Review			
1	Was an independent peer review performed on the Vogtle PRA?	Describe the conclusion and the basis for the conclusion; may refer to self-assessment table..	
2	Was the scope of the peer review adequate?		
3	Did the peer review meet the staff position defined in Regulatory Guide 1.200 for an acceptable peer review?		
4	Were the peer review findings adequately addressed in the PRA?		
General Conclusions			
5	Is the identified list of information needed to accomplish the task reasonably complete?		
6	Does the plant information appropriately represent the as-built and as-operated plant?		
7	Was the plant information used in an acceptable manner?		
8	Are the assumptions for each task identified?		
9	Are the assumptions for each task adequately justified (appropriate)?		
10	Do the results (both interim and final) appear reasonable given the design, operation and historical performance of the plant?		
Specific Conclusions			
		Describe unique or specific conclusions, if any, and the basis for the conclusion.	

In Step 9, the TAG reviews the results of the self-assessment. The TAG uses Tables 18-3 and 18-4 in their review process. A completed self-assessment table for each technical element will be provided to the TAG with space for the TAG to document and track their comments. The analyst then addresses the comments of the TAG and revises the PRA model as appropriate, and documents the resolution of the TAG comments. At this point, the self-assessment is complete.

The elements of the Level 1 PRA that require complete or focused review can be assessed using the guidance in RG 1.200 supported by the requirements provided in the ASME/ANS PRA Standard. For those aspects of the PRA models that do not have a final consensus standard, but do have a standard that is being developed, they will be reviewed using the high level requirements stipulated in the latest draft of the specific standards. This process will be used for the self-assessment review of the Level 2, Level 3, and low power and shutdown PRA. The PRA models for which a standard does not exist or is not being developed (i.e., dry cask storage [DCS], spent fuel pool [SFP]), elements of these models that have similar bases as

compared to those of the Level 1 PRA (e.g., initiating event analysis, data analysis, human reliability analysis, accident sequence analysis, consequence analysis, source term determination, quantification/uncertainty analysis, etc.) can be reviewed using the requirements for the similar technical areas in the Level 1 through Level 3 PRA standards bearing in mind the differences in the requirements related to reactor versus those for the DCS/SFP.

For example, the initiating event analysis for a SFP PRA uses similar techniques and processes as those used for a Level 1 reactor PRA. The high level requirements for the reactor PRA model can be used for the SFP PRA model (the specifics of SFP are presented in parenthesis) as indicated below:

HLR-IE-A The initiating event analysis shall provide a reasonably complete identification of initiating events.

HLR-IE-B The initiating event analysis shall group the initiating events so that events in the same group have similar mitigation requirements to facilitate an efficient but realistic estimation of CDF (fuel damage frequency).

HLR-IE-C The initiating event analysis shall estimate the annual frequency of each initiating event or initiating event group.

Individual supporting requirements can be tailored for use in SFP PRA self-assessment. The only item that needs special attention is the assignment of capability categories for each supporting requirement. It is recognized that a PRA may not satisfy each technical requirement to the same degree (i.e., capability category as used in the ASME/ANS Level 1 PRA Standard), that is, the capability category achieved for the different technical requirements may vary. This variation can range from (1) the minimum needed to meet the attributes and characteristics (e.g., high level requirements in the ASME/ANS Level 1 PRA Standard) for each technical element, to (2) the minimum needed to meet the current good practices for each technical element, to (3) the minimum required to meet the state-of-the-art for each technical element. Furthermore, which capability category is needed to be met for each technical requirement is dependent on the specific application. In general, the staff anticipates that current good practice, i.e., Capability Category II of the ASME/ANS Level 1 PRA Standard, is the level of detail that is adequate for the majority of applications. However, for some applications, Capability Category I may be sufficient for some requirements, whereas for other applications it may be necessary to achieve Capability Category III for specific requirements. For the SFP PRA, capability categories similar to those used in the ASME/ANS Level 1 PRA standard will be used.

Table 18-5 provides an example self-assessment process for the SFP PRA. In the absence of any standard, the technical elements of the SFP PRA defined in Section 15 of the this report are compared to the similar elements of the Level 1 reactor at-power internal events PRA discussed in the ASME/ANS Standard. Tables 18-5 and 18-6 identify both the high level requirements and the supporting requirements that are common and applicable for the self-assessment review of the SFP PRA.

Table 18-5 Example: Mapping of the Technical Elements High Level Requirements (HLR) of SFP PRA and At-Power Level 1 PRA

Task #	At-Power Level 1 PRA Technical Elements (HLR)	SFP PRA Technical Elements
1	**IE Analysis**	**IE Analysis**
	• Identification • Grouping • Analysis	• Identification[29] • Grouping • Analysis • Operating Cycle Discretization [30]
2	**Accident Sequence Analysis**	**Accident Sequence Analysis**
	• CDF Accident Scenario Description • Treatment of Dependencies	• Fuel Uncovery Accident Scenario Description • Treatment of Dependencies
3	**Systems Analysis**	**Systems Analysis**
	• Treatment of Causes for System failure • Treatment of CCF • Treatment of Dependencies	• Treatment of Causes for System Failure • Treatment of CCF • Treatment of Dependencies
4	**Success Criteria**	**Structural Analysis**
	• Defining Overall SSC and Human Action Success Criteria • Using Thermal/Hydraulic, Structural and other supporting Engineering Bases to Drive SC	• Defining Overall SSC and Human Action Success Criteria • Using Thermal/Hydraulic, Structural and other supporting Engineering Bases to Drive SC • Identification of FP failure modes and locations • SFP Structural Integrity Analysis • SSCs Structural Integrity Analysis
5	**Data Analysis**	**Data Analysis**
6	**Human Reliability Analysis**	**Human Reliability Analysis**
	• Identifying routines of activities • Screening of activities • Defining HFEs • Assessing HFE Probability • Identifying Operator Accident Response • Defining Response HFEs • Assessing Response HFE Probability • Modeling Recovery Actions	• Identifying routines of activities • Screening of activities • Defining HFEs • Assessing HFE Probability • Identifying Operator Accident Response • Defining Response HFEs • Assessing Response HFE Probability • Modeling Recovery Actions
7	**Quantification**	**Quantification**

[29] Includes hazard and low-likelihood event screening.
[30] Discretizing the reactor operating cycle into a finite set of operating cycle phases (OCPs) can be considered to be akin to the plant operating states considered in a low power and shutdown PRA, with respect to the amount of decay heat that needs to be considered. This process determines the time available to respond to an accident, before fuel damage occurs.

Table 18-6 Applicability of Supporting Requirements of the At-Power Level 1 PRA to the SFP PRA

	Technical Element HLR	Supporting Requirement	Applies (Y/N)	Comment
1	IE-A	IE-A1	Y	Except instead of core damage (CD) it considers fuel damage (FD)
		IE-A2	Y	Except the IE categories reduce to fuel uncovery and loss of power
		IE-A3	Y	
		IE-A4	Y	
		IE-A5	Y	
		IE-A6	Y	
		IE-A7	Y	
	IE-B	IE-B1	Y	
		IE-B2	Y	
		IE-B3	Y	Note: The timing and the effect on the operability and performance of operators and relevant mitigating systems is one criterion to consider. The operating cycle discretization influences this timing factor.
		IE-B4	Y	
		IE-B5	N	
	IE-C	IE-C1	Y	
		IE-C2	Y	
		IE-C3	Y	
		IE-C4	Y	
		IE-C5	Y	
		IE-C6	Y	Screening the low-frequency events
		IE-C7	Y	
		IE-C8	Y	
		IE-C9	Y	
		IE-C10	Y	
		IE-C11	Y	
		IE-C12	Y	
		IE-C13	Y	
		IE-C14	N	
2	AS-A	AS-A1	Y	
		AS-A2	Y	Except that instead of preventing core damage, fuel damage should be considered
		AS-A3	Y	
		AS-A4	Y	
		AS-A5	Y	
		AS-A6	Y	

DRAFT

Table 18-6 Applicability of Supporting Requirements of the At-Power Level 1 PRA to the SFP PRA

	Technical Element HLR	Supporting Requirement	Applies (Y/N)	Comment
		AS-A7	Y	
		AS-A8	Y	Except that instead of the core damage end state, the fuel damage end state should be considered
		AS-A9	Y	
		AS-A10	Y	
		AS-A11	Y	
	AS-B	AS-B1	Y	
		AS-B2	Y	Except for examples
		AS-B3	Y	
		AS-B4	Y	
		AS-B5	Y	
		AS-B6	Y	
		AS-B7	Y	Except examples (b) and (c)
3	SC-A	SC-A1	N	Applies to fuel damage
		SC-A2	Y	Modifies the parameters and SCs to be used in determining the fuel damage
		SC-A3	Y	
		SC-A4	Y	If applicable
		SC-A5	Y	
		SC-A6	Y	
	SC-B	SC-B1	Y	
		SC-B2	Y	
		SC-B3	Y	
		SC-B4	Y	Except for fuel damage
		SC-B5	Y	
4	SY-A	SY-A1	Y	
		SY-A2	Y	
		SY-A3	Y	
		SY-A4	Y	
		SY-A5	Y	Except for fuel damage
		SY-A6	Y	
		SY-A7	Y	
		SY-A8	Y	
		SY-A9	Y	
		SY-A10	Y	
		SY-A11	Y	
		SY-A12	Y	
		SY-A13	Y	

DRAFT

Table 18-6 Applicability of Supporting Requirements of the At-Power Level 1 PRA to the SFP PRA

	Technical Element HLR	Supporting Requirement	Applies (Y/N)	Comment
		SY-A14	Y	
		SY-A15	Y	
		SY-A16	Y	
		SY-A17	Y	
		SY-A18	Y	
		SY-A19	Y	
		SY-A20	Y	
		SY-A21	Y	
		SY-A22	Y	
		SY-A23	Y	
		SY-A24	Y	
	SY-B	SY-B1	Y	
		SY-B2	Y	
		SY-B3	Y	
		SY-B4	Y	
		SY-B5	Y	
		SY-B6	Y	
		SY-B7	Y	
		SY-B8	Y	
		SY-B9	Y	
		SY-B10	Y	
		SY-B11	Y	
		SY-B12	Y	
		SY-B13	Y	
		SY-B14	Y	
		SY-B15	Y	
5	HR-A	HR-A1	Y	
		HR-A2	Y	
		HR-A3	Y	
	HR-B	HR-B1	Y	
		HR-B2	Y	
	HR-C	HR-C1	Y	
		HR-C2	Y	
		HR-C3	Y	
	HR-D	HR-D1	Y	
		HR-D2	Y	
		HR-D3	Y	
		HR-D4	Y	

DRAFT

Table 18-6 Applicability of Supporting Requirements of the At-Power Level 1 PRA to the SFP PRA

	Technical Element HLR	Supporting Requirement	Applies (Y/N)	Comment
		HR-D5	Y	
		HR-D6	Y	
		HR-D7	Y	
	HR-E	HR-E1	Y	
		HR-E2	Y	Except for preventing or mitigating fuel damage
		HR-E3	Y	
		HR-E4	Y	
	HR-F	HR-F1	Y	
		HR-F2	Y	
	HR-G	HR-G1	Y	
		HR-G2	Y	
		HR-G3	Y	
		HR-G4	Y	
		HR-G5	Y	
		HR-G6	Y	
		HR-G7	Y	
		HR-G8	Y	
	HR-H	HR-H1	Y	
		HR-H2	Y	
		HR-H3	Y	
6	DA-A	DA-A1	Y	
		DA-A2	Y	
		DA-A3	Y	
		DA-A4	Y	
	DA-B	DA-B1	Y	
		DA-B2	Y	
	DA-C	DA-C1	Y	
		DA-C2	Y	
		DA-C3	Y	
		DA-C4	Y	
		DA-C5	Y	
		DA-C6	Y	
		DA-C7	Y	
		DA-C8	Y	
		DA-C9	Y	
		DA-C10	Y	
		DA-C11	Y	
		DA-C12	Y	

DRAFT

Table 18-6 Applicability of Supporting Requirements of the At-Power Level 1 PRA to the SFP PRA

	Technical Element HLR	Supporting Requirement	Applies (Y/N)	Comment
		DA-C13	Y	
		DA-C14	Y	
		DA-C15	Y	
		DA-C16	Y	
	DA-D	DA-D1	Y	
		DA-D2	Y	
		DA-D3	Y	
		DA-D4	Y	
		DA-D5	Y	
		DA-D6	Y	
		DA-D7	Y	
		DA-D8	Y	
7	QU-A	QU-A1	Y	
		QU-A2	Y	Except for fuel damage frequency
		QU-A3	Y	Except for fuel damage frequency
		QU-A4	Y	Except for fuel damage frequency
		QU-A5	Y	
	QU-B	QU-B1	Y	
		QU-B2	Y	
		QU-B3	Y	The example applies to fuel damage frequency
		QU-B4	Y	
		QU-B5	Y	
		QU-B6	Y	Except for fuel damage frequency
		QU-B7	Y	
		QU-B8	Y	
		QU-B9	Y	
		QU-B10	Y	
	QU-C	QU-C1	Y	
		QU-C2	Y	
		QU-C3	Y	
	QU-D	QU-D1	Y	
		QU-D2	Y	
		QU-D3	Y	
		QU-D4	Y	
		QU-D5	Y	
		QU-D6	Y	Except for fuel damage frequency
		QU-D7	Y	
	QU-E	QU-E1	Y	

DRAFT

Table 18-6 Applicability of Supporting Requirements of the At-Power Level 1 PRA to the SFP PRA

	Technical Element HLR	Supporting Requirement	Applies (Y/N)	Comment
		QU-E2	Y	
		QU-E3	Y	Except for fuel damage frequency
		QU-E4	Y	

18.4.3 External Peer Review

The objective of the external peer review is to provide an independent review of the technical acceptability of the developed PRA model and its results.

In order to allow peer review findings to be addressed in a timely manner, external peer reviews will be conducted at various points throughout the performance of the Level 3 PRA project. This approach, as opposed to performing one large, comprehensive external peer review at the end of the project, will minimize the extent of potential re-work.

Where PRA standards (either "final" or "draft for trial use") are available, they will provide the basis for the peer review. The reviews will be performed consistent with the process described in RG 1.200[31] and supplemented with associated interim staff guidance (i.e., for screening external events and for treatment of uncertainties). If a standard is in "draft for trial use" stage, the peer review part of the standard will be reviewed and additional guidance will be developed, if needed, to make it acceptable to the staff. The process and scope of the peer review will be documented prior to each peer review and provided to the peer review team. Table 18-7 provides a suggested format for documenting the peer review findings (it is the same as the TAG review documentation template previously provided as Table 18-1).

[31] Regulatory Guide 1.200, Rev. 2, "An Approach for Determining the Technical Adequacy of Probabilistic Risk Assessment Results for Risk-Informed Activities," March 2009.

Table 18-7 External Peer Review Documentation Template

SR	Finding	Level of Significance and Basis	Recommended Resolution	Implemented Resolution
Reviewer:			Responsible Analyst:	
Risk Source:		Hazard: [e.g., internal events]		Level: [1, 2 or 3]
Technical Element:				Date:
	Reactor, Spent Fuel Pool, Dry Cask Storage, Integrated Risk			
	Describe the finding, what is the issue, why it is a concern; explanation needs to clearly explain the concern and the basis for the concern.	The level of significance of the concern should be listed including the basis for level of significance assessed; see below for explanation of significance.	Describe the recommendation to resolve the concern; the explanation needs to be sufficiently detailed so that the analyst understands what needs to be revised in the PRA to resolve the concern.	Analyst describes the response to the finding and recommendation, describing how it was resolved; the explanation should not be just an "accept," but an explanation of exactly how it was resolved (e.g., how the PRA model was revised).
	List the applicable supporting requirement (SR) using the standard index number; if an SR is not applicable, then use the technical element 2-4 digit abbreviation (xxxx) and the finding numbered sequentially (yy) with an "P" (i.e., xxxx-yy-P). If criteria were developed and used, then reference the criterion number (see Table 18-2).			

- High Significance -- An issue needing resolution to ensure the technical adequacy of the PRA, the capability of the PRA, or the robustness of the PRA update process.
- Medium Significance -- An issue whose resolution is needed to maintain maximum flexibility in PRA applications and consistency with Industry practices (as endorsed by the NRC) or simply to enhance the PRA's technical capability as time and resources permit. It is unlikely that the technical adequacy of the PRA is impacted.
- Low Significance -- An issue that does not impact the technical adequacy of the PRA.

It is initially envisioned that external peer reviews will be performed at the following points in the project timeline:

- Upon completion of the reactor Level 1 PRA analysis for internal events and internal floods for at-power conditions, one unit

- Upon completion of the reactor Level 1 PRA analysis for internal fires and external hazards for at-power conditions, and for internal and external hazards for low power and shutdown conditions, one unit

- Upon completion of the reactor Level 2 PRA analysis for internal and external hazards for all operating modes, one unit

- Upon completion of the reactor Level 3 PRA analysis for internal and external hazards for all operating modes, one unit

- Upon completion of the Level 1, 2, and 3 PRA analysis for spent fuel pools and dry cask storage

- Upon completion of the Level 3 PRA analysis of integrated site risk

The external peer review teams will be comprised of individuals who are independent from the project. It is envisioned that the external peer reviews will be performed by industry (e.g., the PWR Owners' Group, consultants, University staff), supplemented by NRC staff, in particular, Regional senior reactor analysts (SRAs). The results of the external peer reviews will be documented using Table 18-7 and will be provided to the Level 3 Program Manager and to the Document Controller. The Program Manager will provide the external peer review findings to each Task Leader who will review and document how each finding will be resolved.

18.4.4 Advisory Committee on Reactor Safeguards

The objective of the Advisory Committee on Reactor Safeguards (ACRS) review for the Level 3 PRA project is to: (1) monitor progress in the development of the Level 3 PRA and (2) provide insight, advice, and guidance on the technical bases, tools, methods, models, and data for the project, as well as on interpretation of the study results. The ACRS Reliability and PRA Subcommittee will be briefed approximately twice a year to obtain their feedback on the technical approaches and assumptions employed in the Level 3 PRA project. The Communications Team Leader is responsible for summarizing the recommendations from the ACRS after each meeting.

18.5 Documentation Control

Documentation control is a key factor in any analysis to ensure and demonstrate the technical acceptability of the analysis. For each technical task, the method, tools, data and other information being used will be documented along with the basis for their acceptability (e.g., NRC endorsement). The documentation for each technical task is identified in Sections 4 through 17 of this report, and the document control process for this project is described in this section.

As mentioned above, the information to be documented includes the following:

- Methods
- Tools
- Data
- Other information - this includes the various information (other than methods, tools and data) used to develop the PRA model; for example:
  - plant design information reflecting the normal and emergency configurations of the plant
  - plant operational information with regard to plant procedures and practices
  - plant history (plant, system and component performance)
  - plant test and maintenance procedures and practices
  - engineering aspects of the plant design

Given the large amount of information of various types required to construct and report the results of the Level 3 PRA project, an appropriate medium is needed to store and access this information. This medium has to have the ability for the project analysts to store, retrieve, edit, and control the information. SharePoint has been selected to be the medium, and the primary repository for Level 3 PRA project information will be referred to as the Level 3 PRA SharePoint site.

Two Level 3 PRA project team members will primarily be responsible for document control, the SharePoint Manager and the Documentation Coordinator. The SharePoint Manager will be in charge of the various tasks needed to ensure SharePoint runs smoothly and remains organized, while the Documentation Coordinator will receive information from the licensee, process it, and ensure that the information gets to contractors and the SharePoint site in a reasonable timeframe, as well as ensure that vital information is routinely backed up.

Documentation control for this project involves the following major elements, each of which is described in a separate section below:

- Storing and accessing project information
- Upload of information onto the SharePoint site
- Storage and control of licensee information
- Documentation backup
- Use of external media
- Individual personal working files
- Use of templates and forms for documentation
- Documentation control for NRC Contractors
- Non-disclosure agreement to allow access to proprietary information
- Guidance for addressing potential technical issues
- Organization of the various types of information on the SharePoint site

18.5.1 Storing and Accessing Project Information

As mentioned above, SharePoint has been selected as the medium to store and access the Level 3 PRA project information. SharePoint has the necessary flexibility to organize and store the information in a manner consistent with the needs of the project. It also allows for dynamic changes to the organization and site as new needs arise over the course of the project. Moreover, controls can be used to limit access to the information; for example, who is allowed to access the information and who is allowed to edit documents. These controls will help ensure that files are not accidentally deleted or edited without the author's approval. SharePoint also has an established backup procedure that ensures data integrity. Therefore, SharePoint provides a mechanism to ensure that information will not be lost or corrupted.

The information stored on the SharePoint site is only accessible by the project team members who have access to the NRC's local area network.

18.5.2 Upload of Information onto the SharePoint Site

As the work progresses, the project team members will occasionally need to place files onto the Level 3 PRA Project SharePoint site. These files will include information that only the individual analyst will need to access, or that needs to be shared with other members of the task team or

with the entire project team. Moreover, there may need to be restrictions, for example, on who has permission to edit these files.

Although most team members may not edit or modify most of the files stored on the SharePoint site, any project team member has permission to upload files into the temporary storage location titled, "Inbox." Once a file is uploaded into the Inbox, the SharePoint Manager will move the file from the Inbox to its proper read-only location. In order to upload files, there is a link on the right hand side of the front page that is titled, "Inbox: Upload documents to the L3PRA website." This page can also be found by clicking:

http://portal.nrc.gov/edo/res/dra/L3PRA/Inbox_Library/Forms/AllItems.aspx

Once on the Inbox page, the "upload" button is clicked and the analyst chooses the files to be placed on the site. In uploading each file, a brief description of the file and the last edited date is included in the "Notes" section. The restrictions on who has access, edit capability, etc., can be found in Table 18-12 for the different types of information.

18.5.3 Document Control of Licensee Information

The information received from the licensee will also be stored on the SharePoint site. The information on the SharePoint site will be read-only, with the exception of the personal working files (discussed in Section 18.5.6). This administrative control will prevent inadvertent changes to information submitted from the licensee. All information received from the licensee will also be maintained on read only CD-ROMs or DVDs so that, in the event of an inadvertent change on SharePoint, the original data can be restored. Moreover, there is information received from the licensee which is proprietary and not available to the public, and therefore needs to be protected. When information is received from the licensee in support of this project, a proprietary determination is conducted for each submittal.[32] Once this proprietary determination is conducted and approved by the Office of the General Counsel, the information is placed on the SharePoint site for all NRC Level 3 PRA Project Team members. The specific SharePoint folder that contains this information is clearly marked as "Proprietary." If this information is needed by a contractor to perform their work, the information is then copied onto an external media device (usually a CD-ROM, marked as "Proprietary," if applicable) and sent to the contractor along with a notice, if applicable, that the CD-ROM contains proprietary information and should be handled appropriately.

In addition, the licensee may occasionally send updated information, or may resend the same information. These occurrences may cause confusion as to which version of the information is the most current. It is, therefore, essential that the information be administratively controlled such that different information is not being used in developing the model by different analysts. The use of SharePoint for file hosting will greatly simplify this process. The SharePoint Manager and Documentation Coordinator will jointly ensure that the data on the SharePoint site is the most current, up-to-date information that the NRC has received from the licensee, and will notify the entire project team when new information from the licensee is added to the SharePoint site. This notification will identify what information is being added and whether it updates any information currently existing on the site.

[32] RES Office Instruction ADM-003, Revision 1, "Procedures for Handling Request to Withhold Proprietary Information," May 11, 2012, ADAMS Accession Number ML12132A139 (not publicly available).

18.5.4 Documentation Backup

Using SharePoint to store and access all the information connected with the Level 3 PRA Project will ensure a high level of data integrity. The files on SharePoint are backed-up several times a week and copies are maintained both onsite and offsite. If SharePoint is corrupted, this process ensures that there will be minimal loss of information, and progress of the project can continue given an extreme event. In addition to this automatic NRC backup of the information, a local backup of all of the information on the Level 3 PRA SharePoint site will be copied once a week onto an external media device. This backup of the files will be stored onsite for rapid recovery of files. Information that is not able to be placed on the SharePoint site will also be backed up and maintained.

18.5.5 Use of External Media

There may be types of information that are not permitted to be uploaded onto the NRC's SharePoint Site. This type of information generally involves large files and executable files (e.g., Access Database files and files that end in ".exe"). Therefore, an external media device that has been approved for use on NRC equipment will be available, on request, for project team members to back up these files. This external media device will be stored and kept by the Document Coordinator.

In addition, some Level 3 PRA team members will be working on portions of the project that will not be able to be backed up onto the personal working files section of SharePoint, described in Section 18.5.6. An example of this type of work is the MELCOR calculations being completed on high performance computers. The personnel working on these types of files will be given a separate external media device that will allow them to regularly back up their work.

18.5.6 Individual Personal Working Files

For this project, there is a tremendous amount of information that is part of the technical work performed (e.g., code calculations) that is essential to retain. This information is critical in being able to understand how the PRA model was ultimately constructed. To ensure that this information is not lost, each analyst will store their work on the SharePoint site. The site will have a section with a separate folder assigned to each analyst. These personal folders will be viewable by all members of the project team; however, write access will only be available to the individual analyst. At their request, individual analysts can request the SharePoint Manager to provide write access for their folder to other ream members (e.g., if multiple team members are collaborating on the development of a document or file).

Each analyst of the Level 3 PRA project will store their working files and other important information relevant to the project in their personal folder on the SharePoint site instead of their personal computer or some other location. Given the back-up features in place for the Level 3 PRA project information on the SharePoint site, this will ensure that all the necessary information being used in the project is properly saved and stored.

A consistent naming scheme for the working files being stored on the SharePoint site is important to allow task managers (and Level 3 PRA program management) to monitor the progress being made. The naming convention for working files must contain at least a descriptive document title and the date last modified as follows:

[Abbreviation of technical element, See Table 18-8] – [abbreviation of subject of work] – [date]

An example of this is "IE – Grouping of initiators – 3.7.2013." This example is of work associated with grouping of initiators as part of the Initiating Event analysis task that was completed (or last updated) on 3/7/2013.

Table 18-8 Nomenclature for Technical Elements

Abrv.	Technical Element	Abrv.	Technical Element
Level 1 Internal Events			
IE	Initiating Event Analysis	HR	Human Reliability Analysis
AS	Accident Sequence Analysis	DA	Data Analysis
SC	Success Criteria	QU	Quantification
SA	Systems Analysis		
Internal Flood			
IFPP	Internal Flood Plant Partitioning	IFEV	Internal Flood-Induced Initiating Events
IFSO	Internal Flood Source Identification and Characterization	IFQU	Internal Flood Accident Sequences and Quantification
IFSN	Internal Flood Scenarios		
Internal Fire			
PP	Plant Boundary Definition and Partitioning	QNS	Quantitative Screening
ES	Fire PRA Equipment Selection	CF	Circuit Failure Analysis
CS	Fire PRA Cable Selection	HRA	Post-Fire Human Reliability Analysis
QLS	Qualitative Screening	FQ	Fire Risk Quantification
PRM	Fire PRA Plant Response Model	SF	Seismic/Fire Interactions
FSS	Fire Scenario Selection and Analysis	UNC	Uncertainty and Sensitivity Analyses
IGN	Fire Ignition Frequency		
Seismic			
SHA	Probabilistic Seismic Hazard Analysis	SPR	Seismic Plant Response Analysis
SFR	Seismic Fragility Analysis		
High Winds			
WHA	High Winds Hazard Analysis	WPR	High Wind Plant Response Analysis
WFR	High Wind Fragility Analysis		
External Flood			

DRAFT

Table 18-8 Nomenclature for Technical Elements

Abrv.	Technical Element	Abrv.	Technical Element
XFHA	External Flood Hazard Analysis	XFPR	External Flood Plant Response Model and Quantification
XFFR	External Flood Fragility Analysis		
Other Hazards			
XHA	External Hazard Analysis	XPR	External Hazard Plant Response Model/Analysis
XFR	External Hazard Fragility Evaluation/ Analysis		
Level 2			
L1	Level 1-2 Interface	ST	Radiological Source Term Analysis
CP	Containment Capacity Analysis	ER	Evaluation and Presentation of Results
SA	Severe Accident Progression Analysis	L3	Interface Between a Level 2 and Level 3 PRA
PT	Probabilistic Treatment of Event Progression and Source Terms		
Level 3			
RE	Radionuclide Release Characterization for Level 3	HE	Health Effects
PA	Protective Action Parameters and Other Site Data	EC	Economic Factors
ME	Meteorological Data	QT	Consequence Quantification and Reporting
AD	Atmospheric Transport and Dispersion	RI	Risk Estimation
DO	Dosimetry		
Low Power and Shutdown			
LPOS	Plant operating State Analysis	LSY	Systems Analysis
LIE	Initiating Events Analysis	LHR	Human Reliability Analysis
LAS	Accident Sequence Analysis	LDA	Data Analysis
LSC	Success Criteria	LQU	Quantification
Spent Fuel Pool			
SIE	Initiating event analysis	SHR	Human reliability analysis
SST	Structural analysis	SSA	Accident progression and success criteria

DRAFT

Table 18-8 Nomenclature for Technical Elements

Abrv.	Technical Element	Abrv.	Technical Element
SAS	Accident sequence analysis	SQT	Quantification
SSC	Systems analysis	SUNC	Uncertainty analysis
Dry Cask Storage			
DIE	Initiating event analysis	DAS	Accident sequence analysis
DDA	Data Analysis	DQT	Quantification
DHR	Human reliability analysis	DUNC	Uncertainty analysis
DSC	Success Criteria: (Structural and Thermal Hydraulics Analysis)		
Integrated Site Risk			
IROS	Operating State Analysis	IRPT	Probabilistic Treatment of Event Progression and Source Terms
IRIE	Initiating Event Analysis	IRST	Radiological Source Term Analysis
IRAS	Accident Sequence Analysis	IRL3	Interface Between a Level 2 and Level 3 PRA
IRDP	Dependency Analysis	IRRE	Radionuclide Release Characterization for Level 3
IRHR	Human Reliability Analysis	IRQT	Consequence Quantification
IRDA	Data Analysis	IRRI	Risk Estimation
IRQU	Quantification		

18.5.7 Use of Templates and Forms for Documentation

As the work is being performed and decisions are being made in constructing the PRA, it is important to document this information. To ensure the needed amount of information is documented and that it is documented consistently among the analysts, documentation templates/forms have been created. These templates and forms (or similar documentation formats), which will be stored on the SharePoint site, address the following information:

- Results and resolution of reviews (i.e., TAG, self-assessment, and independent peer review) – see Tables 18-1, 18-3, 18-4, and 18-7
- Criteria used for self-assessment (where no standard exists) – see Table 18-2
- Results of meetings: TAG, internal discussions, SNC, briefings, ACRS – see Table 18-9
- Working files – see Tables 18-9 and 18-10
- Technical issues and their resolution – see Table 18-11

During meetings, discussions, and briefings, there can be significant decisions made with regard to the PRA. It is essential to document this information. Table 18-9 provides a template for documenting meetings and discussions. In many instances, there may be issues that are

identified and need to be addressed. These issues will be documented via the process described in Section 18.5.10.

Table 18-9 Documentation of Meetings and Discussions

DATE:				
TOPIC:				
SUMMARY OF MEETING/DISCUSSION:				
CONCLUSIONS				
Num	Decision	Basis for Decision		
ACTION ITEMS				
Num	Item	Assignee	Due	Status

A high level summary of the major points discussed

List and describe each decision made during the meeting/discussions and the bases for the decision; include in the discussion on the decision where and how the PRA model is impacted; can be a high level discussion (e.g., revised Level 1 internal events success criteria).

List and describe each action item identified during the meeting/discussion, who is assigned the action item, the due date of the action item, and the status of the action item, including the date for the reported status. When completed, note “complete” with the completion date.

In performing the work to develop the PRA model, various information, assumptions, etc., are used at different stages (e.g., for the different technical elements). It is essential to document this information. Table 18-10 provides a template for documenting this information, using initiating event analysis as an example.

Table 18-10 Documentation for Level 1 Internal Events Initiating Event Analysis

Sources of Information (Inputs)	
Source	Description

Describe the sources of information (inputs) used in the technical element, the actual input may be attached; inputs from other tasks should also be included.

Data			
Item	Value	Distribution	Description

List each event that has a parameter value, provide its value and uncertainty interval and describe the basis for both; this may be an attachment to the table.

Assumptions	
Assumptions	Basis for Assumptions

Describe each assumption, give the basis for the assumption, and describe how the PRA model would be impacted (e.g., new initiating event, different grouping).

Note:
An assumption is a decision or judgment that is made in the development of the PRA model. An assumption is either related to a source of model uncertainty or is related to scope or level of detail. An assumption related to a model uncertainty is made with the knowledge that a different reasonable alternative assumption exists. A reasonable alternative assumption is one that has broad acceptance within the technical community and for which the technical basis for consideration is at least as sound as that of the assumption being made. An assumption related to scope or level of detail is one that is made for modeling convenience.

Table 18-10 Documentation for Level 1 Internal Events Initiating Event Analysis

Sources of Model Uncertainty	
Source	Characterization

List each source of model uncertainty, describe the source, and describe how the PRA model would be impacted (e.g., new initiating event, different grouping).

Note:
A source of model uncertainty is one that is related to an issue for which there is no consensus approach or model (e.g., choice of data source, success criteria, reactor coolant pump seal loss-of-coolant accident model, human reliability model) and where the choice of approach or model is known to have an impact on the PRA results in terms of introducing new accident sequences, changing the relative importance of sequences, or significantly affecting the overall CDF, LERF, or LRF estimates that might have an impact on the use of the PRA in decision-making.

Documentation Criteria	
Criteria	Documentation Description
DOCUMENT the processes used to select, group, and screen the initiating events and to model and quantify the initiating event frequencies, including the inputs, methods, and results. This documentation includes	
the functional categories considered and the specific initiating events included in each	
the systematic search for plant-unique and plant-specific support system initiators	
the systematic search for RCS pressure boundary failures and interfacing system LOCAs	
the approach for assessing completeness and consistency of initiating events with plant-specific experience, industry experience, other comparable PRAs and FSAR initiating events	
the basis for screening out initiating events	
the basis for grouping and subsuming initiating events	
The final grouping of initiators for which accident sequence development will be performed	
the dismissal of any observed initiating events, including any credit for recovery	
the derivation of the initiating event frequencies and the recoveries used	
the approach to quantification of each initiating event frequency	
the frequencies quantified for initiating event group	

Provide a brief discussion of how the criteria were met; can reference another document that provides the evidence.

DRAFT

Table 18-10 Documentation for Level 1 Internal Events Initiating Event Analysis

the justification for exclusion of any data	
Other Documentation Criteria	

List any unique documentation requirements.

18.5.8 Documentation Control for NRC Contractors

This project will involve a substantial amount of work developed by NRC contractors. For example, the SPAR models and SAPHIRE program were developed and are hosted by INL for the NRC under previous contracts Under the Level 3 PRA contract, INL will host the models for this project, also. It is expected that the NRC Contractors working on this project will have their own internal information and document control system. It is the Contracting Officer's Representative's (COR's) responsibility to ensure that the contractor has an adequate plan to store and backup their work. The COR should document this finding using the review template.

When a document comes to the NRC from a contractor, it will be sent to the COR and technical lead. The technical lead will decide whether the information should be stored only on the SharePoint site, or also in ADAMS. In making this determination, the technical lead will need to consider the following factors:

- Status of the information (e.g., draft, mark-up, final product)
- Whether the document is a deliverable specified in the contract
- Likelihood that the information will ultimately be contained, in whole or in part, in another stored document

As general guidance, final products and other contract deliverables should be stored in ADAMS (as well as on the SharePoint site). Most other information will just be stored on the SharePoint site. Information will be stored on the SharePoint site using the procedure outlined in Section 18.5.2. The technical analyst will make the determination whether the information should be stored in their personal working folder in SharePoint or in some other SharePoint location (if the latter, this should be coordinated with the SharePoint Manager). Generally, contractor information that is final and is being used as reference material should be stored in, for example, a SharePoint location for the associated technical element. Contractor information that is not final should be stored in the technical analyst's personal working folder.

18.5.9 Agreement of the Non-Disclosure Agreement to Allow Access to Proprietary Information

To support the Level 3 PRA project, the NRC has collected a substantial amount of proprietary information about the Vogtle plant and its PRA. To ensure that the staff does not violate the conditions under which the licensee has provided this information, each project team member receives the following electronic message which they must acknowledge before being granted access to the proprietary information area of the Level 3 PRA SharePoint site:

The proprietary information submitted by SNC for Vogtle Units 1 and 2 was provided to the NRC on a voluntary basis and can only be used to support the Level 3 PRA project. In no circumstances can this information be used to support a regulatory decision (including, but not limited to, inspection activities and license reviews). Furthermore, this information shall not be redistributed beyond the Level 3 PRA project team. Please acknowledge your understanding of this information by clicking the vote button above.

18.5.10 Guidance for Addressing Potential Technical Issues

Southern Nuclear Company (SNC) has voluntarily submitted substantial amounts of PRA and plant information to the NRC in support of the Level 3 PRA project. This information is not to be used to support regulatory decisionmaking. This provision is needed because:

- Under the requirements specified in 10 CFR 2.390, "Public inspections, exemptions, requests for withholding," proprietary information submitted will be withheld from public disclosure if it is of a type normally held in confidence by SNC. Non-proprietary versions of these documents will not be made available to the public.

- Information submitted by SNC for this project does not support any regulatory decision and is not required to be done under oath and affirmation or docketed, as would normally be done for a licensing submittal (e.g., see 10 CFR 50.30).

- This information is not being submitted either to support a licensing application or by the Commission's regulations, orders, or license conditions, and consequently the requirements of 10 CFR 50.9, "Completeness and accuracy of information," do not apply.

It is recognized that technical issues may be identified by the NRC during the Level 3 PRA project that may call into question the technical adequacy of the SNC Vogtle PRA[33] with regard to regulatory applications. All validated issues that adversely impact the technical adequacy of the PRA shall be communicated to the appropriate NRC licensing staff in a timely manner. However, it is imperative that any identified concerns be validated as potential issues before being communicated to regulatory staff in NRR. Therefore, it is essential that appropriate separation between the Level 3 PRA project and regulatory decision-making is maintained. Consequently, a process has been developed for communicating technical concerns to SNC staff, evaluating potential issues that may impact PRA results and/or insights, and turning issue follow-up over to the appropriate regulatory process when needed.

For the purposes of this process, the following terms are used:

- Concern – a potential issue that calls into question the technical rigor or adequacy of the SNC Voglte PRA (e.g., potential model errors or deficiencies that may require changes to the model) or related quality control activities (e.g., self-assessment, peer review) that may impact PRA results or insights and that has not been validated. That is, the potential concern may prove not to be an issue after further information and explanation is provided such that the technical rigor or adequacies of the PRA or the quality control activities are no longer valid concerns.

[33] The Level 3 PRA Project is associated with only Units 1 and 2 at the Vogtle site. Units 3 and 4 (currently under construction) are outside of the scope of this project.

- Issue – a potential concern that (1) calls into question the technical rigor or adequacy of the SNC Vogtle PRA or related quality control activities, (2) may impact PRA results or insights, and (3) has been validated after further information and explanation has been provided by the licensee and assessed by the staff.

- Level 3 PRA Project Management Team – In this context, refers to the Level 3 PRA project Program Manager, Principle Technical Advisor, and RES/DRA/PRAB Branch Chief.

- Cognizant staff – project team members that include, at a minimum, the technical lead, but may also include other technical analysts on the project team that are involved with identification or resolution of the issue.

Concerns and issues are generally expected to be associated with assumptions, models, data, and other technical information included in the SNC Vogtle PRA, though other matters of regulatory importance might also be identified (e.g., procedure adequacy or design basis system capability). It is important to make a distinction between staff concerns and a validated issue. For example, a concern may arise because the NRC analyst has questioned the technical adequacy of some aspect of the Vogtle PRA model which has the potential to impact the PRA model results or insights. This concern needs to be validated by discussing the concern with SNC to determine if the NRC staff has appropriately understood the work performed by SNC, and therefore, determine if a validated issue exists. Once identified, issues will be turned over to the appropriate regulatory organization (i.e., NRR/DORL) for follow-up.

The following process is used to ensure that issues identified in the performance of the Level 3 PRA project that have the potential to impact regulatory decision-making are handled in an appropriate manner.

1. If Level 3 PRA Project staff or contractor identifies a concern with the SNC Vogtle PRA or plant information, the cognizant staff will assess what information is needed to either resolve or confirm the concern and what impact the matter could have on the PRA (i.e., the significance of the issue). The cognizant staff will summarize the concern, areas requiring further information (e.g., a set of questions), and the potential impact on the PRA in a document that shall be forwarded to the Level 3 PRA Project Management Team (see Table 18-11), as soon as practical after the concern is identified (at which point, the concern will be added to the issue tracking spreadsheet.

2. The Program Manager will coordinate a meeting or discussion with SNC to address the identified concern. The meeting or discussion will include SNC staff (as identified by SNC), the Level 3 PRA Project Management Team, and the cognizant staff. The results of the meeting or discussion will be documented in accordance with project procedures (see Table 18-9 for documenting discussions/meetings). To facilitate the discussion, the Program Manager may forward the summary description of the issue (in its entirety or in part) to SNC prior to the meeting or discussion. In accordance with project communication protocols, the meeting/discussion will be coordinated with the NRR/DORL Project Manager and the SNC Licensing Director.

3. Following the discussion with SNC (and after reviewing any additional information identified by SNC), the cognizant project staff will determine if the concern has been adequately resolved. If the concern has not been resolved, it will be evaluated by the

Level 3 PRA Project Management Team to determine if a validated issue exists. It will be assumed that any concern that is not resolved by the cognizant staff will be considered to be an issue unless the Level 3 PRA Project Management Team unanimously determines that the issue has been resolved.

4. Once an issue has been identified, appropriate SNC staff will be contacted (in accordance with project communication protocols and in coordination with the NRR/DORL Project Manager) and informed of the details of the issue, including the potential for the issue to impact PRA results and/or insights or call into question the adequacy of quality control activities. SNC will be requested to conduct a review of the issue and inform the NRR/DORL Project Manager of the result of this review. This review will include consideration of any licensing and/or regulatory applications of the PRA. The Level 3 PRA cognizant staff will prepare a written summary of the notification of SNC staff of the issue which the Level 3 PRA Program Manager will forward to the NRR/DORL Project Manager (either by formal memo or email notification).

   Once the issue has been communicated to SNC and the NRR/DORL Project Manager, the Level 3 PRA project team is not responsible for any further follow-up on the potential regulatory implications of the issue.

5. Once the issue has been turned over to NRR/DORL, it is recognized that the Level 3 PRA project team may proceed with an appropriate technical resolution consistent with the overall project objectives. The issue will continue to be documented and tracked using Table 18-11 as the issue is resolved within the context of the Level 3 PRA project.

6. The issues documented on Table 18-11 were identified because they may have an impact on the licensee's PRA that is being used in regulatory activities. There may also be technical issues that arise in constructing the NRC Vogtle PRA. Table 18-11 is also used to document these issues. The general guidance for determining whether an issue should be documented and tracked include:

   - Issue requires coordination across technical areas (e.g., an unresolved technical issue that has the potential to materially impact modeling decisions made in two or more technical areas)

   - Issue warrants communication to the entire Level 3 Project team for awareness

   - Any other issue a project team member determines should be included

DRAFT

Table 18-11 Issue Documentation Template

Issue Documentation Associated with [Technical Element]					
Num	Issue	Level of Significance	Recommended Resolution	Implemented Resolution	Status
	Describe the concern, what is the issue, why it is a concern; explanation needs to clearly explain the concern and the basis for the concern. If the issue is associated with a specific SR, then note and describe the relationship.	The level of significance of the concern should be listed including the basis for level of significance assessed; see below for explanation of significance.	Describe the recommendation to resolve the concern; the explanation needs to be sufficiently detailed so that the analyst understands what needs to be revised in the PRA to resolve the concern, and the basis for the recommended resolution.	Describe the response to the issue and recommendation, describing how it was resolved; the explanation should not be just an "accept," but an explanation of exactly how it was resolved (e.g., how the PRA model was revised), and the basis for the implemented resolution.	Describe the status, what has been accomplished, what still needs to be done, and the date of the status (i.e., the status will continually be updated, each time it is updated, the date needs to be changed accordingly). Once the issue has been resolved (i.e., the PRA model has incorporated the resolution), the status should state complete and the date completed. Part of the status is whether the issue has been reviewed by the TAG (the review by the TAG is documented elsewhere).
	Use the technical element 2-4 digit abbreviation (xxxx) and the issue numbered sequentially (yy) followed by an "I" (i.e., xxxx-yy-I). Note, for issues that may cut across multiple technical elements, use the 4 digit abbreviation "CCCC."				

- High Significance -- An issue needing resolution to ensure the technical adequacy of the PRA, the capability of the PRA, or the robustness of the PRA update process.
- Medium Significance -- An issue whose resolution is needed to maintain maximum flexibility in PRA applications and consistency with Industry practices (as endorsed by the NRC) or simply to enhance the PRA's technical capability as time and resources permit. It is unlikely that the technical adequacy of the PRA is impacted.
- Low Significance -- An issue that does not impact the technical adequacy of the PRA.

18.5.11 Organization of the Various Types of Information on the SharePoint Site

The Level 3 PRA project has numerous different types of information that need to be stored and accessed. The various types of information are summarized in Table 18-12. Also provided in Table 18-12 are the access control settings for the different types of information.

DRAFT

Table 18-12 Summary of Level 3 PRA Project Information on SharePoint Site

	Brief Description of Folder Contents	Access Control*
General L3PRA Project Documents	• General documents relating to the work performed in support of this project (e.g., briefings, TAAP documents)	**Read/Write Access:** SharePoint Manager **Read-Only Access:** All Level 3 PRA Project Team Members **No Access:** All other NRC staff
Reference Documents (Including Vogtle Site Information)	• Plant specific information previously available at the NRC (e.g., FSAR, IPE, IPEEE) • General non-plant specific information (e.g., dry cask storage information) • Proprietary plant specific information sent by Vogtle in support of this project (e.g., PRA models and documentation, plant procedures, system diagrams)	**Read/Write Access:** SharePoint Manager **Read-Only Access:** All Level 3 PRA Project Team Members* **No Access:** All other NRC staff
Task Group Technical Documents (Includes Personal Working Files)	• Personal working files	**Read/Write Access:** SharePoint Manager Each team member will have read/write access to their own working files.** **Read-Only Access:** All Level 3 PRA Project Team Members **No Access:** All other NRC staff
Technical Advisory Group Documents	• TAG information (e.g., meeting minutes)	**Read/Write Access:** SharePoint Manager TAG Coordinator **Read-Only Access:** All Level 3 PRA Project Team Members **No Access:** All other NRC staff
Inbox: Upload Documents to the L3PRA Website	• Miscellaneous documents uploaded to the site that have not yet been filed	**Read/Write Access:** SharePoint Manager **Read-Only Access:** All Level 3 PRA Project Team Members **No Access:** All other NRC staff
*To access the proprietary information area of this folder, project team members need to acknowledge the non-disclosure statement (as discussed in Section 18.5.9). **Write access may be shared with other project team members as the request of the owning individual.		

DRAFT

18.6 Quality Assurance Program Implementation Audits

Periodic audits of the implementation of the Level 3 PRA project QA plan will be performed at a frequency of not less than once per year. These audits will cover a representative sampling of project activities in order to verify compliance with QA plan requirements. The Level 3 PRA Project Management team will determine the scheduling of these audits and how they are to be carried out.

DRAFT