3.3 Wind ~~and~~, Tornado and Hurricane Loadings

DCD_02-03 S01

3.3.1 Wind Loadings

For US-APWR, including site-specific seismic category I and II SSCs subject to wind loads, the design basis wind loadings are determined in accordance with American Society of Civil Engineers (ASCE)/Structural Engineering Institute (SEI), "Minimum Design Loads for Buildings and Other Structures", ASCE/SEI 7-05 (Reference 3.3-1). However, load combinations involving wind or tornado as given in ASCE/SEI 7-05 are not used. Instead, load combinations as defined in applicable codes and as modified by the relevant NRC RGs and SRPs are used. Load combinations, load factors, allowable stresses, and acceptance criteria for US-APWR, including site-specific seismic category I and II SSCs are discussed in Section 3.8.

Extreme winds such as hurricanes and tornadoes also have the potential to generate missiles. Missiles generated by tornadoes and extreme winds are listed in Subsection 3.5.1.4 and barrier design for missiles is discussed in Subsection 3.5.3.

3.3.1.1 Design Wind Velocity and Recurrence Interval

The design wind has a basic speed of 155 mph, corresponding to a 3-second gust at 33 ft above ground for exposure category C (open terrain). For all seismic category I and II SSCs, the basic wind speed is multiplied by an importance factor of 1.15 correlating to essential facilities in hurricane-prone regions as defined in ASCE/SEI 7-05 Tables 1-1 and 6-1. The mean recurrence interval for the basic wind speed with an importance factor of 1.15 is 100 years, which corresponds to an annual probability of exceedance of 0.01, as discussed in commentary Subsection C6.5.5 of ASCE/SEI 7-05 (Reference 3.3-1).

The basic wind speed described above envelopes the basic speed at almost all locations in the contiguous United States (US). A basic wind speed of 155 mph for exposure category C also envelopes all locations in the contiguous US that have the more severe exposure category D (flat, unobstructed areas and water surfaces), such as potential sites near open inland waterways and the Great Lakes. This is because in the contiguous US the exposure category D is associated with regions that are not prone to hurricanes and have basic wind speeds that are much lower, typically 90 mph or less. The COL Applicant is responsible for verifying the site-specific basic wind speed is enveloped by the determinations in this section.

3.3.1.2 Determination of Applied Forces

The applied wind loads are determined by converting the basic wind speed for exposure category C into design pressures or forces using ~~the appropriate~~ method 2 (analytical procedure) from ASCE/SEI 7-05, in accordance with NUREG 0800, SRP 3.3.1 (Reference 3.3-2). ~~either method 1 (simplified procedure) or method 2 (analytical procedure). For both methods, t~~The conversion is performed by determining a velocity pressure which is transformed into an effective design pressure/force by using applicable adjustment factors (including topographic, directionality, and/or gust effect factors), and velocity pressure/force coefficients in accordance with ASCE/SEI 7-05 ~~(Reference 3.3-1)~~and SRP 3.3.1 (References 3.3-1 and 3.3-2). When determining the resulting effective

MIC-03-03-00057

MIC-03-03-00057

design wind pressures/forces, the influences of height and location on an SSC are captured by the adjustment factors and velocity force/pressure coefficients.

~~For method 1 with an importance factor of 1.15 (as discussed in Subsection 3.3.1.1), and substituting 1.0 for the topographic factor, the basic formula for effective wind velocity pressure used for building main wind-force resisting systems is:~~ MIC-03-03-00057

$\cancel{p_s = 1.15\,\lambda\, p_{basic}}$

~~where~~

$\cancel{p_s}$ = ~~effective wind velocity pressure, psf~~

$\cancel{\lambda}$ = ~~adjustment factor for exposure category C from ASCE/SEI 7-05, Figure 6-2~~

$\cancel{p_{basic}}$ = ~~wind pressure value in psf, from ASCE/SEI 7-05, Figure 6-2 corresponding to a basic wind speed of 155 mph~~

For method 2 with an importance factor of 1.15 (as discussed in Subsection 3.3.1.1), equation 6-15 from Subsection 6.5.10 of ASCE/SEI 7-05 is used where the topographic and directionality factors K_{zt} and K_d are each 1.0, (in accordance with SRP 3.3.1, Reference 3.3-2) and substituting into equation 6-17 of ASCE/SEI 7-05, Subsection 6.5.12 for enclosed and partially enclosed buildings, the basic formula for effective wind velocity pressure used for building main wind-force resisting systems is: MIC-03-03-00057

$$p = 0.00256\, K_z\, V^2\, 1.15\, (GC_p +/- GC_{pi})$$

where

p = effective wind velocity pressure, psf

K_z = velocity pressure exposure coefficient varying with height, taken from Table 6-3 of ASCE/SEI 7-05 for exposure category C; however, not less than 0.87 as recommended by SRP 3.3.1 (Reference 3.3-2) MIC-03-03-00057

V = basic wind speed of 155 mph per Subsection 3.3.1.1

G = gust effect factor = 0.85 or as determined per ASCE/SEI 7-05, Subsection 6.5.8 (where a combined gust effect and pressure coefficient factor is used from a figure(s) in ASCE/SEI 7-05, an individual gust effect factor is not applied)

C_p = external pressure coefficient from ASCE/SEI 7-05 Subsection 6.5.11

C_{pi} = internal pressure coefficient from ASCE/SEI 7-05 Subsection 6.5.11 where two cases shall be considered to determine the critical load requirements for the appropriate conditions:

i. a positive value of GC_{pi} applied to all internal surfaces

ii. a negative value of GC_{pi} applied to all internal surfaces

Non-building structures and components and cladding are designed using effective wind velocity force and pressure formulae from ASCE/SEI 7-05 (Reference 3.3-1), consistent with those described above.

All US-APWR and site-specific structures and components subject to wind loads are designed using the same basic wind speed defined in Subsection 3.3.1.1. For certain non-seismic, non-safety related structures and components, an importance factor may be used that is less than that for seismic category I and II structures. Those structures and components that are designed with a lower importance factor are investigated to assure that their failure would impact neither the function nor integrity of adjacent safety-related SSCs, nor result in the generation of missiles having more severe effects than those discussed in Subsection 3.5.1.4. Where required by the results of the investigation, structural reinforcement and/or missile barriers are implemented so as not to jeopardize safety-related SSCs due to failure effects from wind loads.

~~Specific descriptions of wind load design method and importance factor for US-APWR standard structures are as follows.~~ MIC-03-03-00057

- ~~The US-APWR PCCV has a relatively low profile (overall height to diameter ratio of approximately 1.5), and the PCCV is surrounded by the rectangular shaped R/B such that approximately only the upper half of the PCCV is exposed to wind loading. The PCCV does not have response characteristics which make it subject to across wind loading, vortex shedding, or other unusual wind effects which might require investigation using method 3 (wind tunnel procedure) of ASCE/SEI 7-05. Further, the site location of the PCCV is such that channeling or buffeting effects do not warrant special consideration. Therefore, the PCCV is also analyzed using method 2 of ASCE/SEI 7-05 (Reference 3.3-1).~~

- ~~The R/B (seismic category I), the A/B (seismic category II), and the T/B (seismic category II) are analyzed using method 2 and an importance factor of 1.15.~~

- ~~The US-APWR east and west PS/Bs (seismic category I) and the AC/B (non-seismic) are low-rise, simple rigid diaphragm buildings which conform to the requirements of ASCE/SEI 7-05 Subsections 6.4.1.1 and 6.4.1.2. Therefore, these buildings have been analyzed using method 1 of ASCE/SEI 7-05 (Reference 3.3-1).~~

The COL Applicant is to provide the wind load design method and importance factor for site-specific seismic category I and seismic category II buildings and structures. The COL Applicant is to also verify that the site location does not have features promoting channeling effects or buffeting in the wake of upwind obstructions that invalidate the standard plant wind load design ~~methods described above~~. DCD_03.03.02-5 MIC-03-03-00057

COL 3.3(3) *It is the responsibility of the COL Applicant to assure that site-specific structures and components not designed for tornado and hurricane loads will not impact either the function or integrity of adjacent safety-related SSCs, or generate missiles having more severe effects than those discussed in Subsection 3.5.1.4.* DCD_02-03 S01

COL 3.3(4) *The COL Applicant is to provide the wind load design method and importance factor for site-specific category I and category II buildings and structures. The COL Applicant is to also verify that the site location does not have features promoting channeling effects or buffeting in the wake of upwind obstructions that invalidate the standard plant wind load design. ~~methods described above.~~* DCD_03.03.02-5 MIC-03-03-00057

COL 3.3(5) *The COL Applicant is to note the vented and unvented requirements of this subsection to the site-specific category I buildings and structures.*

COL 3.3(6) *The COL Applicant is responsible for verifying that the site specific design basis hurricane basic wind speeds, exposure category, and resulting wind forces are enveloped by the determinations in this section.* DCD_02-03 S01

3.3.4 References

3.3-1 Minimum Design Loads for Buildings and Other Structures, American Society of Civil Engineers/Structural Engineering Institute, ASCE/SEI 7-05, Reston, Virginia, 2006.

3.3-2 Wind Loads, Standard Review Plan for the Review of Safety Analysis Reports for Nuclear Power Plants, NUREG-0800, United States Nuclear Regulatory Commission SRP 3.3.1, Rev. 3, March 2007.

3.3-3 Tornado Design Classification, United States Nuclear Regulatory Commission Regulatory Guide 1.117, Rev. 1, April 1978.

3.3-4 Design-Basis Tornado and Tornado Missiles for Nuclear Power Plants, United States Nuclear Regulatory Commission Regulatory Guide 1.76, Rev. 1, March 2007.

3.3-5 Tornado Loads, Standard Review Plan for the Review of Safety Analysis Reports for Nuclear Power Plants, NUREG-0800, United States Nuclear Regulatory Commission SRP 3.3.2, Rev. 3, March 2007.

3.3-6 Williamson, R.A. and Alvy, R.R., Impact Effect of Fragments Striking Structural Elements, Holmes and Narver, Inc. Publishers, November 1973.

3.3-7 Tornado and Extreme Wind Design Criteria for Nuclear Power Plants, Bechtel Topical Report BC-TOP-3-A, Bechtel Power Corporation, San Francisco, California, Rev. 3, August 1974.

3.3-8 Design-Basis Hurricane and Hurricane Missiles for Nuclear Power Plants, United States Nuclear Regulatory Commission, RG 1.221, October 2011. DCD_02-03 S01

3.8 Design of Category I Structures

3.8.1 Concrete Containment

3.8.1.1 Description of the Containment

3.8.1.1.1 General Arrangement

The general arrangement (GA) drawings in Chapter 1 show the overall layout of the US-APWR PCCV including the vessel general outline, floor plans, and elevations of the overall structure. The geometric shape of the PCCV is a vertically oriented cylinder topped by a hemispherical dome with no ring girder at the dome/cylinder interface. The GA drawings reflect major equipment locations, including the nuclear steam supply system, and overall contents such as the RWSP, reactor cavity, refueling cavity, refueling canal, operating deck, polar crane, and major piping, mechanical, and electrical penetrations. Locations of other features are also shown including the containment internal structure, buttresses, equipment hatch, personnel airlocks, basemat, and tendon gallery.

The PCCV is anchored to a common ~~foundation~~ basemat, which is described in more detail in Subsection 3.8.5, that it shares with the R/B ~~and the containment internal structure~~complex. MIC-03-03-00057

The PCCV has an inside diameter of 149 ft, 2 in. and an inside height of 226 ft, 5 in. The thickness is 4 ft, 4 in. for the cylinder and 3 ft, 8 in. for the dome. Areas around the large openings are thickened to provide additional strength and provide space for the prestressing tendons that are deflected around the openings. The materials used to construct the PCCV are discussed in Subsection 3.8.1.6.

The PCCV consists of a prestressed concrete shell containing unbonded tendons and reinforcement steel. Prestressing is obtained through post-tensioning – a method of prestressing in which tendons are tensioned after concrete has hardened. Reinforcing steel is provided overall in the cylinder and dome. Additional reinforcement is provided at discontinuities, such as the cylinder-basemat interface, around penetrations and openings, at buttresses, and at other areas.

The PCCV is a concrete containment vessel with a metallic liner and is designed to the requirements of ASME Section III Division 2. Metallic penetrations through the PCCV are necessary for maintenance, access and process functions but because they penetrate the PCCV they are also required to perform containment pressure boundary and containment functions. A summary of the types of penetrations through the PCCV is provided as follows: DCD_03.08.01-14

Equipment Hatch

Personnel Airlocks (2)

Fuel Transfer Tube

Large and Small Diameter Piping

Electrical Penetrations DCD_03.08.01-14

The concrete shell inner surface is lined with a minimum 1/4-in. carbon steel plate that is anchored to the concrete shell and dome to provide the required pressure boundary leak tightness. Areas around penetrations, support brackets, inner walls, and heavy components bases have thickened steel liner plates. The other items integrally welded to the liner form part of the overall pressure boundary, including but not limited to, the equipment hatch at elevation 86 ft, 3 in. ~~(with ground level elevation 2 ft, 8 in.)~~, an airlock at elevation 28 ft, 10 in. and a personnel airlock at elevation 80 ft, 2 in., various piping and electrical penetrations, and miscellaneous supports that are embedded in the concrete shell such as the polar crane brackets. The liner plate system is not designed or considered as a structural member in providing for the overall PCCV load resistance. The liner plate system is attached to the PCCV shell with an anchorage system that is depicted on Figure 3.8.1-2. In the cylinder portion of the PCCV, the liner is anchored with WT5x11s running vertically at a pitch of 1.6° (approximately 25 in. spacing along the inside face of the PCCV shell), and stiffened with 1/2 in. by 6 in. rib plates running horizontally in the hoop direction. In the dome portion of the PCCV, except the lowest panel portion where the cylinder liner anchorage system is also adopted, the upper portion of dome liner is anchored with 3/8 in. by 6 in. rib plates (spaced at approximately 32-1/4 in. maximum) which are oriented in a radial pattern originating at the dome apex. The rib plates are stiffened with 5 in. by 3 in. by 1/4 in. angles running horizontally in the hoop direction, spaced ~~approximately~~ at 3~~4~~3 in. maximum ~~maximum~~. Where acceptable based on the results of design analyses performed for the liner-and-anchorage system (discussed in Subsection 3.8.1.4), the liner anchors are connected to the liner using discontinuous welds such as stitched fillet welds. MIC-03-03-00057 MIC-03-03-00057 MIC-03-03-00066

Figure 3.8.1-1 provides the overall dimensions of PCCV and Figure 3.8.1-5 provides GA of prestressing tendons and conventional reinforcement of the PCCV shell. Figure 3.8.1-3 and 4 also show the liner anchorage system arrangement.

3.8.1.1.2 Equipment Hatch

Figure 3.8.1-6 provides the equipment hatch general layout. The hatch is located at centerline elevation 86 ft, 3 in., azimuth 40 degrees, and is a 27 ft, 11 in. diameter spherical dish with a convex profile projecting into the PCCV volume. The containment internal pressure places the hatch head into compression against a double-sealed seat on the frame. The space between the two seals is capable of pressure testing for leakage across either seal.

A lifting rig with an electrically powered hoist is provided to disengage, raise, and store the hatch in a secure position above the opening during outages. When required to seal the opening, the hatch is lowered back by hoist, repositioned, refastened, and pressure tested for leaks. The hoist and lifting rig are the only components necessary to open or close the equipment hatch. The hoist is ac-powered by offsite power sources and the onsite AACs. DCD_19-566

3.8.1.1.3 Personnel Airlocks

Figure 3.8.1-7 provides the general layout for the two personnel airlocks. The lower airlock at centerline elevation 28 ft, 10 in. is located at azimuth 24 degrees, and upper

airlock at centerline elevation 80 ft, 2 in. is located at azimuth 120 degrees. The airlock inside diameter is 8 ft, 6-3/8 in.

3.8.1.1.4 Mechanical Penetrations

Several typical PCCV penetrations are shown in Figure 3.8.1-8.

Figure 3.8.1-8, Sheet ~~12~~13, shows typical details for the main steam penetrations. An anchor flange disc is embedded along the outer surface of the PCCV wall, with 12 triangular gussets at equal spacing connecting the flange disc and a 60 in. Outside Diameter (OD) cylindrical pipe sleeve, which is capped with a flexible boot outside the PCCV. A similar gusset configuration exists at the PCCV inner wall surface connecting the pipe sleeve to the thickened steel liner. The sleeve extends inside containment and is welded to the flued head. The distance from the inner surface of the containment to the flued head is 3 ft, 9-1/4 in. for Loops ~~A~~B (P510) and ~~D~~C (P511), and 4 ft, 3-1/4 in. for Loops ~~B~~A (P509) and ~~C~~D (P512). The 32 in. OD main steam pipe passes through the sleeve opening. MIC-03-03-00057 MIC-03-03-00057

Figure 3.8.1-8, Sheet ~~13~~14, shows typical details for the startup feedwater penetration. An anchor flange disc is embedded along the outer surface of the PCCV wall, with eight triangular gussets at equal spacing connecting the flange disc and 30 in. OD cylindrical pipe sleeve which is capped with a flexible boot outside the PCCV. A similar gusset configuration exists at the PCCV inner surface connecting the pipe sleeve to the thickened steel liner. The sleeve extends inside containment and is welded to the flued head. The distance from the inner surface of the containment to the flued head is 3 ft, 7-1/4 in. for Loops ~~A~~B (P502) and ~~D~~C (P503), and 3 ft, 9-1/4 in. for Loops ~~B~~A (P501) and ~~C~~D (P504). The 16 in. OD feedwater supply pipe passes through the sleeve opening. The 4 in. SG blowdown pipe (Figure 3.8.1-8 Sheet ~~14~~15) passes through a 14 in. OD pipe sleeve that is anchored in the PCCV wall with four rectangular gussets embedded approximately midway in the wall. The sleeve extends inside containment and is welded to the flued head. The distance from the inner surface of the containment to the flued head is 1 ft, 10-5/8 in. for all loops. The SG blowdown pipe sleeve is capped with a flexible boot outside the PCCV. MIC-03-03-00057 MIC-03-03-00057

The fuel transfer tube penetrates the PCCV wall near azimuth 0 degrees, connecting the fuel handling canal in the R/B with the refueling canal in the interior of the PCCV. The fuel transfer tube penetration is sealed with the PCCV wall similar to other mechanical penetrations. The containment boundary is a double-gasketed blind flange at the refueling canal end. The expansion bellows are independent of the containment boundary; however, they maintain water seals by accommodating differential movement of the structures. The fuel transfer tube penetration is shown on Sheet 17 of Figure 3.8.1-8. MIC-03-03-00057

In accordance with the Regulatory Position Section C.IV.1 “Combined License Application Acceptance Review Checklist” of RG 1.206 (Reference 3.8-1), the US-APWR PCCV is also equipped with dedicated PCCV penetrations, equivalent in size to a single 3 ft diameter opening, in order not to preclude future installation of systems to prevent containment failure, such as a filtered vented containment system. These penetrations are shown on Sheet 6 of Figure 3.8.1-8. MIC-03-03-00057

Figure 3.8.1-8, Sheets 1 through ~~10, 15, and 17~~5, 7, 8, 11, and 16 show other typical mechanical penetration details. Figure 3.8.1-8, Sheet ~~16~~17, provides the penetration detail of the refueling canal. MIC-03-03-00057

3.8.1.1.5 Electrical Penetrations

Figure 3.8.1-8, Sheet ~~11~~9, 10, and 12, shows a typical electrical penetration detail. MIC-03-03-00057

3.8.1.1.6 Prestressing Configuration

Horizontal hoop tendons are used in the cylinder and the lower part of the dome. The horizontal tendons wrap around the entire circumference, and are anchored at two vertical buttresses 180 degrees apart. The anchors for the horizontal tendons are staggered such that adjacent tendons are anchored on opposite buttresses. The horizontal tendons anchored at the two vertical buttresses are accessed for servicing through vertical chases provided in the R/B at each buttress.

The inverted U tendons run vertically up the cylinder, over the dome in a non-radial mesh pattern, and down to the tendon gallery on the opposite side. These inverted U tendons, approximately configured in the form of an inverted “U,” are anchored at each end in a tendon gallery. The circular tendon gallery allows for servicing and installation of the inverted U tendons and is located entirely within the reinforced concrete basemat~~-foundation~~. The tendon gallery is accessed through a hallway, which passes horizontally through the basemat to the exterior plant yard. MIC-03-03-00057

Typical PCCV structural details are given in Figures 3.8.1-1 and 2. Design details include tendon and tendon anchorage, typical liner and liner anchorage, typical conventional reinforcing (non-prestressed) layouts, anchorage of the PCCV shell to the basemat, polar crane bracket, tendon buttress, structural reinforcing, and tendon spacing at openings. Table 3.8.1-1 presents basic design data for the PCCV that functions as the primary containment for the US-APWR.

3.8.1.2 Applicable Codes, Standards, and Specifications

The following industry codes, standards and specifications are applicable for the design, construction, materials, testing and inspections of the PCCV.

Rules for Construction of Nuclear Facility Components, Division 2, Concrete Containments, Section III, American Society of Mechanical Engineers, 2001 Edition through 2003 Addenda [hereafter referred to as ASME Code]. (Reference 3.8-2).

> Note: Articles CC-1000 through CC-6000 of Section III, Division 2 are acceptable for the scope, material, design, construction, examination, and testing of concrete containments of nuclear power plants subject to the regulatory positions provided by RG 1.136 (Reference 3.8-3).

Rules for Inservice Inspection of Nuclear Power Plant Components, Section XI, American Society of Mechanical Engineers, 2001 Edition through 2003 Addenda (Reference 3.8-4).

Design Limits, Loading Combinations, Materials, Construction, and Testing of Concrete Containments, RG 1.136, U.S. Nuclear Regulatory Commission, Washington, DC, Revision 3, March 2007 (Reference 3.8-3).

Inservice Inspection of Ungrouted Tendons in Prestressed Concrete Containments, RG 1.35, U.S. Nuclear Regulatory Commission, Washington, DC, Revision 3, July 1990 (Reference 3.8-5).

Determining Prestressing Forces for Inspection of Prestressed Concrete Containments, RG 1.35.1 U.S. Nuclear Regulatory Commission, Washington, DC, July 1990 (Reference 3.8-6).

Concrete Containment, NUREG-0800 SRP Section 3.8.1, U.S. Nuclear Regulatory Commission, Washington, DC, March, 2007 (Reference 3.8-7).

3.8.1.3 Loads and Load Combinations

The PCCV is designed for the loads and load combinations defined in the ASME Code, Section III (Reference 3.8-2), in Article CC-3200 “Load Criteria” and Table CC-3230-1 “Load Combinations and Load Factors,” except as noted in RG 1.136 (Reference 3.8-3) Regulatory Position 5:

- The post LOCA flooding combined with the OBE set at one-third or less of the plant SSE is eliminated, since the load combination is less severe than the post-LOCA flooding combined with a SSE.

- ASME Code, Section III, Subarticle CC-3720 is satisfied by addressing an accident that releases hydrogen generated from 100% fuel clad-coolant reaction accompanied by hydrogen burning, including the effects of temperature and prestress. See Subsection 3.8.1.3.2.2 for further discussion of this design condition.

Load combinations and factors based on ASME Table CC-3230-1 are presented in Table 3.8.1-2. Load combinations involving wind, hurricane and tornado have been determined to be less severe than other cases through comparison calculations to the design-basis earthquake loads and, therefore, load combinations involving wind, hurricane and tornado are not used in the full detailed design analyses of the overall PCCV structure and its liner. DCD_02-03 S01 DCD_02-03 S01

3.8.1.3.1 Loads

The following is a brief description of loads unique to the PCCV and liner used in Table 3.8.1-2 for design and analysis. Subsection 3.8.4.3 gives definitions and descriptions of other loads based on the ACI 349-06 (Reference 3.8-8) and AISC N690-1994, including Supplement 2 (Reference 3.8-9), ~~definitions and descriptions,~~ which are consistent with the ASME Code, Section III. MIC-03-03-00066 MIC-03-03-00057

discussed in Subsection 3.8.1.4. The calculated thermal gradients are developed in a manner consistent with the methodology of ~~ACI 349~~ACI 349-06 (Reference 3.8-8) Appendix ~~A~~E and its corresponding commentary. MIC-03-03-00066

- **Earthquake Loads (E_{ss})**

  For the PCCV, earthquake loads E_{ss} and the seismic analysis are discussed and summarized in Section 3.7. There are two horizontal and one vertical earthquake components that require combination as discussed in Subsection 3.7.2.6. Earthquake loads are applied to the three dimensional structural FE model. MIC-03-03-00057

3.8.1.3.2 Other Loads

Loads other than those discussed in the previous subsection, such as crane or other attachment loads, hydrodynamic, ~~pressures from soil,~~ jet impingement or pipe impact loads ~~cause of pipe break~~resulting from HELB, and flooding have also been investigated in the overall design but also in particular for local effects. Construction loads on the liner are of particular concern and are included in the discussion in Subsection 3.8.1.3~~.4~~. MIC-03-03-00057 MIC-03-03-00057

3.8.1.3.2.1 OBE-Induced Stress Cycles

As recommended in Section II.3.C of NUREG-0800, SRP 3.8.1 (Reference 3.8-7), OBE-induced stress cycles are considered in the design of the liner adjacent to crane brackets. In determining the number of earthquake cycles for use in design, the guidance of NRC Staff Requirements Memorandum SECY-93-087 (Reference 3.8-12) is used. The number of earthquake cycles used is two SSE events with 10 maximum stress cycles per event or equivalent.

3.8.1.3.2.2 Hydrogen Burn

Containment integrity is maintained by ~~satisfying~~applying Subarticle CC-3720 of the ASME Code, Section III (Reference 3.8-2), ~~which considers the pressure and dead load combination independently during an accident (exclusive of seismic or DBA) loadings~~to an accident (exclusive of seismic or DBA) condition that releases hydrogen generated from 100% metal-water reaction of the fuel cladding ~~and~~ accompanied by hydrogen burning. Under these conditions, the loadings do not produce strains in the PCCV liner in excess of the limits established in Subarticle CC-3720 of the ASME Code, Section III (Reference 3.8-2). MIC-03-03-00057

For the factored load design associated with the prestressed concrete wall:

$$D + P_g1 + [P_g2 \text{ or } P_g3\ ]$$

where

D = Dead load

P_g1 = Pressure resulting from an accident that releases hydrogen generated from 100% fuel clad metal-water reaction = 46.7 psia ~~from Reference 3.8-55~~ MIC-03-03-00057

P_g2 = Pressure resulting from uncontrolled hydrogen burning (if applicable) = 127 psia ~~from Reference 3.8-55~~ MIC-03-03-00057

P_g3 = Pressure resulting from post-accident inerting assuming carbon dioxide is the inerting agent (Not applicable to US-APWR)

The factored load design of the US-APWR PCCV complies with the guidance of RG 1.136 (Reference 3.8-3). MHI Technical Report MUAP-10018 "US-APWR Containment Performance for Pressure Loads" (Reference 3.8-55) documents the methodology used to determine the pressure effects of an accident that releases hydrogen generated from 100% fuel clad metal-water reaction and uncontrolled hydrogen burning on the PCCV. The maximum pressure considered in the analysis in MUAP-10018 (Reference 3.8-55) is $P_g1 + P_g2$ = 173.7 psia = 159 psig. The analysis also includes effects of dead load D.

3.8.1.3.3 Load Combinations

Load combinations and applicable load factors are presented in Table 3.8.1-2, ~~which includes the worst case load combination of dead load, operating live load, and maximum load values of extreme environmental conditions~~for which the containment structure is designed. MIC-03-03-00057

3.8.1.3.4 Liner Plate Loads and Load Combinations

Liner plate strains are evaluated for the same loads and load combinations as those used to design the PCCV shell, which are presented in Table 3.8.1-2, except that all load factors for the liner plate are 1.0 in accordance with Subarticle CC-3720 of the ASME Code, Section III (Reference 3.8-2). In general, load cases that are shown to be less severe than other cases do not receive a full design analysis.

Liner plate stresses are evaluated for the construction load category and for the mechanical loads applied to attachments on the liner plate. During construction, the liner plate functions as the inner concrete form and as such it is subject to pressure from concrete placement as a primary load. This pressure can be treated as a hydraulic load with a maximum pressure determined as follows: the head height is the sum of the placement rate plus one foot for vibration plus one foot for miscellaneous factors. After the concrete sets, this load on the liner is no longer a real mechanical load; therefore, it is not combined with other primary loads.

A condition of the liner which is considered in the design occurs after the postulated DBA, when the pressure has decreased and the temperature is high in the liner, but has not yet significantly increased in the concrete shell. This condition produces large loads in the liner due to the concrete anchorage restraining expansion of the liner steel.

Accident pressure has little effect on the liner plate since it is backed by the concrete shell which is constructed against it.

Other loads and effects for the liner, penetrations, brackets, and attachments are considered. Local thickening of the liner is provided as necessary at penetration assemblies. The liner analysis considers deviations in the liner geometry due to fabrication and erection tolerances, including secondary stresses caused by service and factored loads to the displaced shape of the liner caused during construction as discussed above. Stresses imposed by mechanical load of concrete are not included since those stresses do not pose real loads once the concrete has hardened.

The effects of anchors, embedments, or other attachment details not attached to the steel liner or a load carrying steel element that provide anchorage into the PCCV from the external surface, are considered for their effect on the PCCV. The liner is not considered as a structural member when determining overall PCCV integrity, however where necessary the liner may be considered to satisfy the requirement of 0.0020 times the gross cross-sectional area for reinforcement in each direction on the inside face of the PCCV to resist effects of shrinkage, temperature, and membrane tension.

3.8.1.4 Design and Analysis Procedures

Design and analysis procedures for structural portions of the PCCV, and specified allowable limits for stresses and strains as discussed in Subsection 3.8.1.5, are in accordance with Article CC-3000 of the ASME Code, Section III (Reference 3.8-2). The design and analysis procedures for the PCCV, including the steel liner, are according to those stipulated in Article CC-3300 of the ASME Code, Section III (Reference 3.8-2) and RG 1.136 (Reference 3.8-3). ASME Code, Section III, Article CC-3100 applies to the design of the “Concrete Containment” and the “Metallic Liner.” ASME Code, Section III (Reference 3.8-2), covers both the “Service Load Category” and the “Factored Load Category.” Loads are classified as “Primary” or “Secondary” in accordance with definitions provided by the ASME Code, Section III (Reference 3.8-2).

The PCCV analysis methods are summarized in Table 3.8.1-4. For the US-APWR, the PCCV ~~seismic~~ analysis ~~includes its basemat as well as the R/B and containment internal structure~~assumes a fixed base condition. The basemat design is further described in Subsection 3.8.5, the R/B in Subsection 3.8.4, and the containment internal structure in Subsection 3.8.3. The SSI design and analysis approach is discussed further in Subsection 3.7.2.4. MIC-03-03-00057

The detailed PCCV analyses use general purpose global FE models. The global FE model addresses discontinuities and openings in the PCCV structure, such as the cylinder-basemat interface, cylinder-dome springline, buttress-wall interface, equipment hatch, and personnel airlock openings. Changes in material properties, changes in physical dimensions such as thicknesses, and changes in boundary or support conditions between elements are accounted for in the models. The FEs used have membrane, bending, and tangential and radial shear capability.

Computer code development, verification, validation, configuration control, and error reporting and resolution are in accordance with the Quality Assurance requirements of Chapter 17.

3.8.1.4.1 Analyses for Design Conditions

3.8.1.4.1.1 Analytical Methods

The PCCV structure is analyzed by the use of the linear elastic FE computer program ANSYS (Reference 3.8-14). The PCCV is isolated from other structures for the analysis of shell and dome~~s~~ stresses, however, it is supported on and anchored to a common basemat with those structures. The PCCV structure is idealized for analysis and modeled with ANSYS as a structure consisting of isoparametric membrane-bending plate elements. MIC-03-03-00057

The three-dimensional global FE analysis model as represented in Figures 3.8.5-~~7~~5~~,~~ through 3.8.5-~~8~~10~~, and 3.8.5-9~~ includes the overall PCCV structure, as well as the R/B, ~~the~~east PS/B, west PS/B, A/B containment internal structure and the common basemat to which all these structures are supported. The FEs used for the PCCV analyses (Figure 3.7.2-1) have membrane, bending, tangential, and radial shear capability. The model accounts for effective prestress equivalent to the variation of tendon friction due to losses or changing geometry, for example the inverted U-shape tendons' transition from cylinder to dome. In developing the model, the mesh size is chosen to comply with the following basic considerations and empirical checks. MIC-03-03-00057

- When considering areas, such as the main steam penetration, concentrated load, or reaction areas, the critical location for shear is generally one-half the thickness away from the opening edge and, the element size should account for this fact.

- The mesh discretization is chosen to assure adequate representation of the controlling stresses for key elements of the design such as for the general shell, the basemat, the discontinuities at cylinder base and the intersection with the dome, the large openings, buttresses, high energy piping penetrations, and pipe whip restraint locations, where required.

The behavior of the PCCV model overall is typically axisymmetric, particularly under dead and pressure loads. The non-axisymmetric effects of such loads including but not limited to wind, tornadoes, hurricane, earthquake, and pipe rupture are taken into account in the FE analysis as required by SRP 3.8.1, Section II.4.B (Reference 3.8-7). DCD_02-03 S01

In designing the PCCV superstructure, the square root of the sum of the squares (SRSS) method based on elastic analyses is used to evaluate the seismic load for the three components of the earthquake. The design forces due to the seismic load obtained by the SRSS method are beyond those obtained from inelastic analysis, at the PCCV shell/mat interface. The associated redistribution effects are found to be insignificant.

Stress analyses of the FE models are performed considering the following loads defined in accordance with ASME Code, Section III, Article CC-3000 (Reference 3.8-2):

- Dead load

- Live load (including polar crane loads as applicable)

shell and the resulting profiles are calculated in a uni-dimensional heat flow analysis. ~~Temperatures within the concrete wall are calculated in a unidimensional heat flow analysis and the average and equivalent linear gradients considering thermal stress of the liner plate, are applied to the FE model of the PCCV, as during normal operation~~This uni-dimensional heat flow is normalized and the average and equivalent linear gradients are created and applied to the FE model of the PCCV. MIC-03-03-00046

3.8.1.4.1.3 Variation of Physical Material Properties

In the design analysis of the PCCV, the physical properties of materials are based on the values specified in applicable codes and standards. The design analysis takes into account the minimum/maximum values permitted by the codes and standards as appropriate to capture worst case analysis scenarios.

3.8.1.4.2 Design Methods

The design of the PCCV structure is based on the membrane forces, shear forces and bending moments resulting from the loads and load combinations defined in Subsection 3.8.1.3. The membrane forces, shear forces and bending moments in selected sections are obtained from the linear FE analysis ~~performed using the computer program ANSYS. The global analysis considers the major structural configurations, including the PCCV, R/B, and containment internal structure on a common basemat, using solid element modeling and linear material assumptions~~. MIC-03-03-00046

3.8.1.4.2.1 Concrete Cracking Considerations

As discussed in SRP 3.8.1 (Reference 3.8-7) Section II.4.D, concrete cracking can affect the stiffness of the PCCV and cause shifting of the natural frequency, thereby affecting the response/loads used to design the PCCV. Accordingly, the analysis used to calculate the dynamic response of the PCCV resulting from dynamic loads such as earthquake and hydrodynamic loads considers the potential effects of concrete cracking where significant. The addition of stiffness to the concrete sections due to the presence of the liner is not considered in the analysis and design of the PCCV concrete shell. MIC-03-03-00046

The concrete and reinforcement stresses are calculated considering the extent of concrete cracking at these sections. The following are assumptions for calculations:

- The concrete is isotropic and linear elastic but with zero tensile strength
- The thermal forces and moments are reduced according to the concrete cracking depth
- The redistribution of section forces and moments that occurs due to concrete cracking is taken into account

The depths of cracks were determined using an iterative process that initially determines the total load applied to an uncracked section. A crack ~~length~~depth is then postulated on the tensile face, the neutral axis is shifted, and the redistributed forces and moments are recalculated. This process is repeated with the ~~length~~depth of the crack being increased MIC-03-03-00046 MIC-03-03-00057

until force equilibrium is obtained. This iterative process allows the location and ~~length~~depth of the crack to be analytically evaluated and also establishes a deterministic approach to obtain the force and moment reduction within the concrete section. MIC-03-03-00046 MIC-03-03-00057

For thermal loads, the effects of concrete cracking are considered in developing the internal forces and moments in the section. For these loads, concrete cracking relieves the thermal stress, as well as redistributes the internal forces and moments on the sections from those obtained from a linear analysis. ~~At the cylinder to basemat junction, cracking reduces the moments since they are created due to self constraint.~~ MIC-03-03-00046

Thermal loading, particularly the accident temperature applied to the PCCV steel liner, generates a force on the surface of the PCCV wall and creates a moment relative to the neutral axis. This thermal moment is generally capable of cracking the concrete and loads are redistributed to reinforcing steel with the development of a couple and more specifically reduced by a change in the distance of the crack to the shifted neutral axis. The shifting of the neutral axis results in the redistribution of the forces and moments within a local area.

Primary loads and combined primary and secondary thermal loads are considered both individually and in combination. Both conditions are considered because the location of the tensile face can be different for each loading condition and is influenced by the geometry of the structure.

The PCCV shell is evaluated for a condition in which the liner is heated as a result of a LOCA while the concrete maintains a normal operating temperature gradient. The difference in temperature induces a compressive stress and strain in the liner plate ~~as well as the concrete~~. This condition is defined as the liner plate spike load. MIC-03-03-00057

3.8.1.4.3 Ultimate Capacity of the PCCV

The US-APWR ultimate pressure capacity analyses are based on detailed 3D FE~~finite element~~ modeling, advanced material constitutive relations including material degradation with temperature, and an assessment of uncertainties within a probabilistic framework. MIC-03-03-00046

~~Accident conditions leading to over-pressurization include elevated temperatures. Because of thermal induced stresses and material property degradation at elevated temperatures, the fragility for over-pressurization is also a function of temperature~~Fragility for over-pressurization is a function of temperature because of thermal induced stresses and material property degradation at elevated temperatures. Thus, the fragility analyses are conducted for three different thermal conditions, 1) normal operating steady-state conditions, 2) a long term accident condition, and 3) a hydrogen burning condition. MIC-03-03-00046

~~The analyses indicate that the pressure capacity is limited by liner tearing, which is found to first initiate at the transition to the thickened concrete section for the equipment hatch~~Analyses indicate that the ultimate capacity is limited by liner tearing, which first initiates at the transition to the thickened concrete section for the equipment hatch under both normal operating and long-term accident conditions. The expected or median pressure to initiate tearing is found to be 223.6 psig or 3.29 times the design pressure (Pd) of 68 psig for the steady state thermal conditions associated with a long term MIC-03-03-00046

accident condition. The expected medial pressure to initiate tearing is found to be 230.0 psig, or 3.38* P_d, for the steady state thermal conditions associated with normal operating conditions. This limitation in pressure capacity due to liner tearing for the long-term accident condition is consistent with the ¼ scale PCCV tests performed at Sandia National Laboratories (SNL), References 3.8-56 and 3.8-57. The 95% confidence value for liner tearing ~~under long term accident conditions~~ is determined to be ~~176 psig or 2.59* Pd in these analyses. The median capacity due to liner tearing for the hydrogen burning case is found to be 238.5 psig or 3.51* Pd. This pressure is higher than that at normal operating conditions, which is attributed to the compressive stress induced into the liner due to the locally higher temperatures of the liner relative to the concrete~~184.9 psig, or 2.72*P_d for normal operating conditions and 176 psig, or 2.59* P_d, under long term accident conditions. MIC-03-03-00046 MIC-03-03-00046

The limiting mechanism for pressure capacity at the hydrogen burning condition is determined to be buckling and subsequent tearing of the equipment hatch cover. The analyses indicate buckling develops in the equipment hatch cover creating a plastic hinge and ultimately tearing at the outer periphery of cover. The median value for pressure capacity due to failure of the equipment hatch cover under hydrogen burning conditions is 220.9 psig (3.25* P_d) with a 95% confidence value of 163.3 psig (2.40* P_d). The median capacity due to liner tearing for the hydrogen burning case is found to be 238.5 psig or 3.51* P_d. This pressure is higher than that at normal operating conditions, which is attributed to the compressive stress induced into the liner due to the locally higher temperatures of the liner relative to the concrete.

A lower pressure of 171 psig (2.51* P_d) is found for the 95% confidence value for rebar failure around the equipment hatch with the median pressure capacity being 237.4 psig (3.49* P_d). This ultimate capacity develops in the local reinforcement on the outside surface of the PCCV around the equipment hatch. The local equipment hatch model indicates that local liner capacity around the equipment hatch is enveloped by the PCCV liner capacity, thus it is concluded that the PCCV liner capacity would be the limiting pressure capacity near the 95% value (176 psig) determined for that postulated condition.

~~The median liner capacity for the hydrogen burning case is found to be 238.5 psig or 3.51* P_d. This pressure is higher than that at normal operating conditions, which is attributed to the compressive stress induced into the liner due to the locally higher temperatures of the liner relative to the concrete.~~ MIC-03-03-00057

~~However, note that t~~The 95% high confidence value for pressure capacity due to liner tearing, away from openings, under hydrogen burning conditions is lower than that for normal operating conditions reflecting the additional uncertainty for the severe accident conditions and effects of high temperatures. For ultimate capacity based on rebar and tendon rupture, the median pressure capacity for long term design accident conditions is found to be 243.6 psig or 3.58* Pd. It is also determined that the ultimate capacity is not limited by the concrete strength. These results are again consistent with the SNL test for the ¼ scale PCCV model. These analyses also indicate that the ultimate capacity does not strongly depend on temperature. The median ultimate capacity at normal operating temperature is determined to be 3.65*Pd and the median ultimate capacity under hydrogen burning conditions is 3.60*Pd. MIC-03-03-00046

on the robust nature of the PCCV, externally generated design-basis missiles including tornado missiles, as discussed in Section 3.5, do not challenge the PCCV cylinder or dome. The SG and pressurizer compartments protect the liner from direct missile impact. In other areas of the PCCV where a high-energy piping missile potential is not discounted due to the LBB analysis discussed in Subsection 3.6.3, missile shielding in accordance with Section 3.5 is utilized inside the PCCV to prevent missile impact on the liner.

3.8.1.4.6 Design Report

A Design Report of the PCCV is provided separately from the DCD. In accordance with ASME Code, Section III (Reference 3.8-2), Subarticle NCA-3350, the Design Report has sufficient detail to show that the applicable stress limitations are satisfied when components are subjected to the design loading conditions.

3.8.1.5 Structural Acceptance Criteria

The PCCV, including its liner, is designed considering the loads and load combinations discussed in Subsection 3.8.1.3, and meets the structural acceptance criteria discussed in this subsection. The US-APWR PCCV structural acceptance criteria are based on the allowable stress and strain requirements given in Article CC-3400 of the ASME Code, Section III (Reference 3.8-2), and Article CC-3700 for the liner. In accordance with those requirements, the PCCV structure is designed to remain elastic under service load conditions and below the range of general yield under load conditions involving factored primary loads. In limited instances when load conditions involve primary plus secondary factored loads, a general yield state may occur only for some secondary components as permitted by Subarticle CC-3110, and not with respect to radial shear stress; however, reinforcement and concrete strains are maintained within allowable limits given in Subarticle CC-3420. The allowable stresses and strains are summarized in the following paragraphs where the major components of the PCCV and its liner are discussed with respect to factored loads and then service loads.

3.8.1.5.1 Acceptance Criteria for Factored Load Conditions

Factored loads include loads encountered infrequently, such as severe environmental, extreme environmental, and abnormal loads.

3.8.1.5.1.1 Concrete

The US-APWR design follows the requirements of ~~ASME Code, Section III (Reference 3.8-2), Subarticle CC-3421.1, and Table CC-3421-1 of the ASME Code, Section III,~~Subarticle CC-3421.1 and Table CC-3421-1 of the ASME Code Section III (Reference 3.8-2), which define the allowable concrete stresses for membrane and membrane plus bending. The allowable stresses therein are defined for both primary and primary-plus-secondary factored loads. Primary and secondary forces are defined in Subarticle CC-3136 of the ASME Code, Section III (Reference 3.8-2). Primary forces are the result of items such as actual loads, whereas secondary forces result from conditions caused by internal self-constraint and are self-limiting. The forces which result from thermal strain of the concrete wall are an example of secondary forces. MIC-03-03-00057

As stated in Subarticle CC-3421.2 of ASME Code, Section III (Reference 3.8-2), concrete tensile strength is not relied upon to resist membrane and flexural tension forces.

Concrete in General Shear

The US-APWR complies with ASME Code, Section III (Reference 3.8-2) requirements for qualification of concrete shear. Shear capacity is defined using two components. One component is that carried by the concrete defined as V_c, and the other, if required, is that carried by the reinforcing steel V_s. The total shear capacity of the concrete, provided by the sum of the two, is greater than the applied shear load. In the ASME Code, Section III (Reference 3.8-2), the concrete capacities are defined in Subarticle CC-3420 "Allowable Stress for Factored Loads." The steel reinforcement capacities for factored load design are defined in Subarticle CC-3521 "Design of Shear Reinforcement."

Radial Shear

The radial shear provisions for the US-APWR are in accordance with the ASME Code, Section III (Reference 3.8-2), as stated in Subarticles CC-3421.4.2 "Prestressed Concrete" and CC-3521.2 "Radial Shear."

Tangential Shear

The allowable tangential shear stress in concrete is defined in Subarticle CC-3421.5.2, which defines concrete tangential shear strength based on providing a minimum amount of prestress as described in Subarticle CC-3521.1.2. ASME Code, Section III (Reference 3.8-2), Subarticle CC-3521.1.2 requires that: "(a) A sufficient amount of prestress shall be provided so that N_h and N_m are negative (compression) or zero. Thermal membrane forces shall be included in N_h and N_m for the calculation of effective prestress" and "(b) No additional reinforcement is required for tangential shear forces if $V_u \leq 0.85\ V_c$ where V_c is calculated according to Subarticle CC-3421.5.2." Item (c) of Subarticle CC-3521.1.2 further states "When the section under consideration does not meet the requirements of either Subarticle CC-3521.1.2 (a) or (b), additional reinforcement shall be provided according to requirements of Subarticle CC-3521.1.1." The requirements of Subarticle CC-3521.1.1 include provisions for inclined reinforcement. Because it is highly undesirable from a construction standpoint to provide inclined shear reinforcing, the PCCV shell is designed such that any tangential shear reinforcement provided is orthogonal only (hoop/meridional), and the amount of prestress used in the design is increased as necessary to preclude the use of inclined shear reinforcement.

~~Note:~~ For purposes of tangential shear reinforcement design per Subarticle CC-3521, the membrane forces N_h and N_m include thermal, pressure, prestress and dead loads but do not include earthquake, wind, ~~or~~ tornado, or hurricane loads. The lateral membrane loads from earthquake or wind are defined in N_{hl} and N_{ml} and the lateral tangential shear force is defined in V_u. MIC-03-03-00057 DCD_02-03 S01

For the structural portions of the PCCV, the specified allowable limits for stresses and strains are in accordance with Article CC-3400 of the ASME Code, Section III

(Reference 3.8-2), with ~~the following~~ additional limits provided by RG 1.136, Regulatory Position 5.C. (Reference 3.8-3)~~:~~. MIC-03-03-00057

- ~~For the PCCV, the computed principal tensile stress is not to exceed the following value:~~

  ~~$4\sqrt{f'_c}$ (psi)~~

Peripheral Shear

This type of shear loading (also known as punching shear) is applicable to penetration areas and items such as the crane brackets. The PCCV complies with shear allowable relative to the concrete shear capacity as given in Subarticle CC-3421.6, and Subarticle CC-3521.3 for reinforcement shear capacity (Reference 3.8-2).

Torsional Shear

This type of loading can occur at piping penetrations due to applied piping loads. The torsional shear allowable relative to concrete is given in Subarticle CC-3421.7 (Reference 3.8-2). At penetrations and similar situations, when the applied shear exceeds that determined in Subarticle CC-3421.7, shear reinforcement is provided in accordance with Subarticle CC-3521.4 (Reference 3.8-2).

3.8.1.5.1.2 Prestressing System

Tendons

The allowable for factored loads is 90% of yield as stated in Subarticle CC-3423 (Reference 3.8-2).

End Anchor

The US-APWR is in accordance with ASME Code, Section III, Subarticle CC-3431.1 for concrete compression allowable under the tendon bearing plates. The anchorage components meet the requirements Subarticles CC-2430, CC-2450 and CC-2460 (Reference 3.8-2).

Prestressing Losses

The losses considered in the tendons are based on the items defined in ASME Code, Section III, Subarticle CC-3542 (Reference 3.8-2) including:

1. Slip at anchorage
2. Elastic shortening of concrete
3. Creep of concrete
4. Shrinkage of concrete

5. Stress relaxation

6. Friction loss due to intended or unintended curvature in the tendons

In addition, "Determining Prestressing Forces for Inspection of Prestressed Concrete Containments", RG 1.35.1 (Reference 3.8-6) is used as guidance for determination of prestressing losses. Prestressing losses are computed on the basis of ~~the US-APWR,~~a 60 year design life. MIC-03-03-00057

3.8.1.5.1.3 Reinforcement Steel

Tension

In accordance with ASME Code, Section III, Subarticle CC-3422.1 (Reference 3.8-2), the design yield strength is limited to 60,000 psi and the allowable stress for load resisting purposes does not exceed 0.9 f_y. Under combined primary and secondary forces, the tensile strain in reinforcement may exceed 0.9 ϵ_y. MIC-03-03-00057

In limited cases such as at the edge of large openings, a limited amount of yielding is permitted in accordance with the provisions in Subarticle CC-3422.1.

Compression

In accordance with ASME Code, Section III, Subarticle CC-3422.2 (Reference 3.8-2), the allowable stress does not exceed $0.9f_y$. In limited situations where the concrete is required to strain during development of design concrete capacity, the reinforcement is allowed to strain beyond the point of yield.

General Shear

See discussion ~~above~~in Subsection 3.8.1.5 for qualification of general shear capacity with factored loads. MIC-03-03-00057

Radial Shear

The radial shear provisions are in accordance with the ASME Code, Section III as stated in Subarticles CC-3421.4.2 "Prestressed Concrete" and CC-3521.2 "Radial Shear" (Reference 3.8-2).

Tangential Shear

Orthogonal tangential shear reinforcement is provided in accordance with the allowable stresses and the formulas in Subarticle CC-3521.1.1 (Reference 3.8-2).

Peripheral Shear

This type of shear loading is applicable to penetration areas and items such as the crane brackets. The allowable stresses used in the US-APWR design relative to the concrete shear capacity are as per ASME Code, Section III, Subarticle CC-3421.6 (Reference 3.8-

End Anchor

ASME Code, Section III, Subarticle CC-3431.1 specifies concrete compression allowable under the tendon bearing plates. The anchorage components ~~of the US-APWR~~ meet the requirements of Subarticles CC-2430, CC-2450 and CC-2460 (Reference 3.8-2). MIC-03-03-00057

Losses

The losses considered in the tendons are based on the items defined in ASME Code, Section III (Reference 3.8-2), Subarticle CC-3542. In addition, RG 1.35.1 (Reference 3.8-6) is used as guidance in the determination of prestressing losses. Prestressing losses are computed on the basis of ~~the US-APWR~~ 60~~-~~-year design life. MIC-03-03-00057

3.8.1.5.2.3 Reinforcing Steel Systems

Tension

In accordance with ASME Code, Section III, Subarticle CC-3432.1 (Reference 3.8-2), the average tensile stress is limited to $0.5f_y$; however, provisions are included for increases under certain conditions.

Compression

In accordance with ASME Code, Section III, Subarticle CC-3432.2 (Reference 3.8-2), the compressive stress is limited to $0.5f_y$; however, provisions are included for increases under certain conditions.

General Shear

See discussion ~~above~~in Subsection 3.8.1.5 for qualification of general shear capacity with service loads. MIC-03-03-00057

Radial Shear

The radial shear provisions for the US-APWR are in accordance with the ASME Code, Section III, Subarticle CC-3431.3 “Shear, Torsion, and Bearing” and Subarticle CC-3522 “Service Load Design” (Reference 3.8-2).

Tangential Shear

The US-APWR design is in accordance with ASME Code, Section III, Subarticle CC-3522 (Reference 3.8-2). Since only wind generates tangential shear in the service load category, wind does not govern the design.

Peripheral Shear

The US-APWR design complies with allowable stresses as identified in ASME Code, Section III, Subarticle CC-3522 (Reference 3.8-2).

Torsional Shear

attachments that have structural components carrying major loads, for example the upper plates of crane brackets, such a structural component of the attachment is made continuous through the liner. When through-thickness liner loads cannot be avoided and the liner is 1 in. or more in thickness, then the special welding and material requirements of Subarticle CC-4543.6 are applied. In addition to the requirements given in Subarticle CC-4543.6 (a) through (d), ultrasonic examinations are required prior to fabrication to preclude the existence of laminations in the installed material.

3.8.1.6 Material, Quality Control, and Special Construction Techniques

The major materials that are used for the design of the PCCV are defined herein. It is the responsibility of the COL Applicant to assure that any material changes based on site-specific material selection for construction of the PCCV meet the requirements specified in ASME Code, Section III (Reference 3.8-2), Article CC-2000, and supplementary requirements of RG 1.136 (Reference 3.8-3) as well as SRP 3.8.1 (Reference 3.8-7).

Quality control programs are in accordance with applicable portions of Articles CC-4000 and CC-5000 of the ASME Code, Section III (Reference 3.8-2). Additional quality assurance requirements are also implemented as provided by RG 1.136 (Reference 3.8-3). Chapter 17 provides additional discussion of the QAP.

The information listed below is specifically for the PCCV and does not preclude the selection of site-specific material provided that they are rectified with the standard design and meet the ASME Code, Section III (Reference 3.8-2), SRP 3.8.1 (Reference 3.8-7), and RG 1.136 (Reference 3.8-3) requirements.

Concrete

The concrete constituents and concrete mix design comply with the requirements of Article CC-2200 of the ASME Code, Section III (Reference 3.8-2).

Cement used in the concrete conforms to the requirements of ASTM C 150, Specification for Portland Cement, Type I, Type II, Type IV, Type V, or ASTM C 595, Specification for Blended Hydraulic Cements, Type IP, Type IP (MS), or Type (MH).

Aggregates used in the concrete conform to the requirements of ASTM C 33, Specification for Concrete Aggregates (Reference 3.8-44).

Mixing water used in the concrete conforms to the requirements of Subarticle CC-2223 of the ASME Code, Section III (Reference 3.8-2).

Admixtures include air-entraining admixtures, chemical admixtures, and mineral admixtures. The admixtures, except mineral admixtures, are stored in a liquid state. Air-entraining admixtures conform to the requirements of ASTM C 260, Air-Entraining Admixtures for Concrete (Reference 3.8-~~48~~76). MIC-03-03-00057

Mineral admixtures conform to the requirements of ASTM C 618, Fly Ash and Raw or Calcined Natural Pozzolans for Use in Portland Cement Concrete (Reference 3.8-~~49~~77). MIC-03-03-00057
Chemical admixtures conform to the requirements of ASTM C 494, Chemical Admixtures for Concrete (Reference 3.8-~~50~~78). MIC-03-03-00057

Compressive Strength

The concrete design compressive strength for the PCCV is f'_c = 7,000 psi

The concrete design compressive strength for the basemat is f'_c = 5~~4~~,000 psi MIC-03-06-00073

As previously discussed in Subsection 3.8.1.5, concrete is not allowed to rely on tensile strength to resist flexural and membrane tension except where permitted in ASME Code, Section III (Reference 3.8-2) allowable shear provisions. The concrete creep for the 60 year design life is 400μ in/in; for purposes of design, it is considered that 2/3 of this occurs in the first year after completion of prestressing. The concrete shrinkage for the 60 year design life is 150μ in/in; for purposes of design, it is considered that 2/3 of this ~~creep~~shrinkage occurs in the first year after completion of concrete placement. The concrete specification defines the concrete constituents such as aggregates, cement, water, and admixtures that constitute the mix design, cement grout, and production testing requirements. The materials comply with the requirements of Article CC-2200 of the ASME Code, Section III (Reference 3.8-2). MIC-03-03-00057

Additionally, it is the responsibility of the COL Applicant to determine the site-specific aggressivity of the ground water/soil and accommodate this parameter into the concrete mix design as well as into the site-specific structural surveillance program. As required by SRP 3.8.1 (Reference 3.8-7), for plants with nonaggressive ground water/soil (i.e., pH is greater than 5.5, chlorides are less than 500 ppm, and sulfates are less than 1,500 ppm), an acceptable program for normally inaccessible, below-grade concrete walls and basemats is to (1) examine the exposed portions of below-grade concrete for signs of degradation, when excavated for any reason; and (2) conduct periodic site monitoring of ground water chemistry, to confirm that the ground water remains nonaggressive. For plants with aggressive ground water/soil (i.e., exceeding any of the limits noted above), an acceptable approach is to implement a periodic surveillance program to monitor the condition of normally inaccessible, below-grade concrete for signs of degradation.

Liner Plate System

Liner Plate

The steel liner plate is designed as SA-516 Grade 60, 1/4 in. minimum thickness.

Where thickened for embedded plates, attachment bracket locations, openings, penetrations, and other such applications, the steel liner plate is SA-516 Grade 70. Grade 60 is used where justified in the design with respect to acceptance criteria previously discussed in Subsection 3.8.1.5.

The ASME Code, Section III (Reference 3.8-2) does not specifically require a corrosion allowance for the liner, and none is provided. The design of the PCCV is sufficient to prevent significant corrosion by protecting the liner against a corrosive environment. A suitable protective coating such as an epoxy coating is applied where necessary for corrosion protection, where suitability implies that the coating is DBA/LOCA-certified, resistant to break-down due to radiation exposure, and easily decontaminated. Further, corrosion allowance is accounted for in the design by demonstrating sufficient margin on

the thickness to accommodate a small amount of corrosion that may occur over the 60-year design life.

The Liner Plate System specification complies with Article CC-2500 of the ASME Code, Section III (Reference 3.8-2). Fracture toughness requirements for the liner plate material are in accordance with Subarticle CC-2520 (Reference 3.8-2).

The PCCV is a prestressed concrete containment structure designed to the requirements of ASME Section III Division 2. The portion of the metallic penetrations that are in contact with the concrete shall be designed in accordance with the ASME Section III Division 2, Subarticle CC-3740. The areas of the metallic penetrations, e.g. piping nozzles, equipment hatch, personnel airlocks, and fuel transfer tubes, that form part of the pressure boundary, or are appurtenances attached to the load bearing sleeves/nozzles, shall be designed in accordance with the requirements of the ASME Boiler and Pressure Vessel Code, Section III Division 1 Subarticle NE (Class MC components) provided as Reference 3.8-48. The jurisdictional boundary between the two codes shall be at the location where the sleeve is not directly supported by the concrete. DCD_03.08.01-14

~~The specification for the PCCV personnel airlocks and equipment hatch refers to the ASME Code, Section III, Division 1 (Reference 3.8-48), which is applicable to metallic material not backed by concrete for load carrying purposes (refer to Subarticle CC-2112 for the delineation of jurisdiction). Fracture toughness requirements for materials for locks and hatch and other penetration assemblies subject to Division 1 of the ASME Code, Section III are in accordance with Article NE-2300 (Reference 3.8-48).~~

Liner Anchor System

The liner anchors that are tees, angles, flat bars, and miscellaneous shapes are SA-36 structural steel~~ or material of comparable yield strength meeting the requirements of ASTM A-992~~. MIC-03-03-00057

Penetration Assemblies

Penetration assembly thickened plates are SA-516 Grade 70. Grade 60 may be used in some places where justified in the design. Penetration pipe sleeves/nozzles are SA-333 Grade 6. Flat head and collar material used at small-bore pipe penetrations (less than 3 in. nominal diameter) is SA-516, or any material listed in Appendix I of the ASME Code, Section III (Reference 3.8-2), which is compatible with the penetration nozzle and piping in terms of weldability.

Brackets and Attachments

Brackets and Attachments are SA-36 structural steel~~ or material of comparable yield strength meeting the requirements of ASTM A-992~~. MIC-03-03-00057

Miscellaneous

The use of leak chases, although not an ASME Code requirement, is employed on the US-APWR in locations where the liner plate pressure boundary welds are not accessible after completion of construction. Leak chase material is SA-36 structural steel ~~or ASTM~~ MIC-03-03-00057

~~A 992~~ or any other acceptable material in Mandatory Appendix I of the ASME Code, Section III (Reference 3.8-2). MIC-03-03-00057

Prestressing System

The material chosen for the design of the tendons meets the requirements of Article CC-2400 of the ASME Code, Section III (Reference 3.8-2). The prestressing system is designed as a strand system, however, the system material may be switched to a wire system at the choice of the COL Applicant. If this is done, the COL Applicant is to adjust the US-APWR standard plant tendon system design and details on a site-specific basis. The ultimate capacity of an individual tendon as designed is 2.9 million pounds; however, it may be supplied within a plus or minus 5% tolerance, which is accounted for in the prestressing and overall design.

All tendons are unbonded (ungrouted) and have the capability to be detensioned and retensioned to a higher value and have a wire or strand removed after detensioning during a tendon surveillance operation.

Tendon Material

A strand system is utilized for the US-APWR standard plant design based on the following description of material requirements:

- The strand systems are fabricated from ASTM A416, Grade ~~1860~~270 #15, 0.6 in. diameter strands. The strands are of the low relaxation type. The relaxation losses are documented by a minimum of 3 manufacturer's tests performed as required by ASME Code, Section III (Reference 3.8-2), Subarticle CC-2424 and under the conditions as specified by ASTM A416. MIC-03-03-00057

If a wire system is selected, the design is reviewed and prestressing system details adjusted to accommodate the following wire system material requirements:

- Wire systems are fabricated from ASTM A421, Type BA, 1/4 in. diameter solid wire. The wire is of the low relaxation type. The relaxation losses are documented by a minimum of three manufacturer's tests performed as required by ASME Code, Section III (Reference 3.8-2), Subarticle CC-2424 and under the conditions as described in ASTM A421 supplementary requirements for low-relaxation wire.

For either tendon system, the relaxation losses are not more than 2.5% when initially loaded to 70% of the minimum breaking strength or not more than 3.5% when loaded to 80% of specified minimum breaking strength of the strand after 1,000 hours of testing. The temperature of the test specimens are maintained at 68° ± 3.5°F. As recommended by RG 1.35.1 (Reference 3.8-6), there are to be a sufficient number of data points in each of the three tests to extrapolate the data to the 60 year design life of the PCCV at a sustained temperature of 90°F. The extrapolation is performed using regression analysis.

For both systems, as recommended in RG 1.35.1 (Reference 3.8-6) Section 2.3, the design provides allowances to accommodate breakage (during construction) of individual wires or strands in the tendons, on both an overall as well as a localized basis.

Anchorage Components

The tendon end anchorage material selected in the design meets the requirements of ASME Code, Section III (Reference 3.8-2), Subarticle CC-2430. Additional material requirements per RG 1.136 (Reference 3.8-3) follow.

- The specification that defines the material and special material testing requirements for the Prestressing System complies with Article CC-2400 of the ASME Code, Section III (Reference 3.8-2) for items where applicable.

In addition to the requirements of ASME Code, Section III (Reference 3.8-2), Subarticle CC-2433.2.3, “Acceptance Standards,” the following guidance per RG 1.136 (Reference 3.8-3) is used:

- The maximum hardness for material of anchor head assemblies and wedge blocks are not to exceed that of Rockwell C40. To maintain uniformity in hardness, the tolerance on a designated hardness number does not exceed ± 2.

In addition to the requirements in ASME Code, Section III (Reference 3.8-2), Subarticle CC-2434, “Wedges and Anchor Nuts,” the following guidance is used to protect prestressing materials from low-temperature effects:

- Materials for all load-bearing components of prestressing systems should be selected so that they can withstand the anticipated low-temperature effects without a loss in their ductility. Methods and procedures similar to those used for materials of liners in Subarticle CC-2520, “Fracture Toughness Requirements for Materials,” are acceptable for qualifying the materials. Additionally, suitable tests should be conducted to demonstrate that with the maximum allowable flaw size (cracked button heads, wedges, and anchor nuts); the specific components exhibit the required strength and ductility under the lowest anticipated temperatures.

In addition to the requirements of ASME Code, Section III (Reference 3.8-2), Subarticle CC-2463.1, “Static Tensile Test,” the following guidance is used: Any system of prestressing should be subjected to a sufficient number of tests to establish its adequacy. Justification that a sufficient number of tests have been performed, as well as a description of the test program, should be available for NRC review.

Nonload-Carrying and Accessory Materials

Tendon duct, channel, trumpet, and transition cone material meets the requirements of ASME Code, Section III (Reference 3.8-2), Subarticle CC-2440. Corrosion prevention coatings are required for unbonded tendons and are in accordance with Subarticle CC-2442.

Reinforcing Steel Systems

The material ~~is ASTM A615 Grade 60 or A615 Grade 75 (provided that ductility and splicing requirements are met), and~~ meets the requirements of Article CC-2300 of the ASME Code, Section III (Reference 3.8-2). MIC-03-03-00057

Splicing material also meets the requirements of Article CC-2300 of the ASME Code, Section III (Reference 3.8-2).

All material for the reinforcing steel system including bars and splices conforms to Article CC-2300 of the ASME Code, Section III (Reference 3.8-2).

3.8.1.7 Testing and Inservice Inspection Requirements

Structural integrity testing of the PCCV is performed in accordance with Article CC-6000 of the ASME Code, Section III (Reference 3.8-2), RG 1.35 (Reference 3.8-5), and RG 1.35.1 (Reference 3.8-6). The testing meets the same requirements for ILRT and Containment Leakage Testing as given in RG 1.206 Subsection C.I.6.2.6 (Reference 3.8-1).

Preoperational structural testing is performed for the overall PCCV, equipment hatch and personnel airlocks in accordance with Article CC-6000 of the ASME Code, Section III (Reference 3.8-2).

It is the responsibility of the COL Applicant to establish programs for testing and ISI of the PCCV, including periodic inservice surveillance and inspection of the PCCV liner and prestressing tendons in accordance with ASME Code Section XI, Subsection IWL (Reference 3.8-4).

Chapter 6 defines the ILRT requirements for the overall PCCV in addition to ILRT requirements for the penetrations and openings and containment isolation valves. The ILRT program meets the requirements of 10 CFR 50, Appendix J (Reference 3.8-18). Chapter 6 discusses the test and instrument plan, frequency of measurements, structural response predictions, and any other necessary requirements in accordance with Article CC-6000 of the ASME Code, Section III (Reference 3.8-2).

Specific structural requirements for the ~~SIT~~Structural Integrity Test of the PCCV are summarized as follows: MIC-03-03-00057

Displacement Measurements

Displacement measurements of the PCCV as defined in ASME Code, Section III (Reference 3.8-2) Subarticle CC-6360 meet the following provisions.

- Radial displacements of the cylinder are measured at a minimum of five approximately equally spaced elevations located at 20%, 40%, 60%, 80%, and 100% of the distance between the base and the spring line. These measurements are made at a minimum of four approximately equally spaced azimuths. Measurement of the total displacement may be made between diametrically opposite locations on the PCCV wall. The radial displacement may be assumed to be equal to one-half of the measured change in diameter.

- Radial displacements of the PCCV wall adjacent to the largest opening, are measured at a minimum of 12 points, four equally spaced on each of three concentric circles. The diameter of the inner circle is just large enough to permit measurements to be made on the concrete rather than on the steel sleeve; the

In general surveillances are scheduled after the structural integrity test starting at 1, 3, and 5 years and every 5 years thereafter. There is some flexibility to this as stated in ASME Code, Section XI, Subarticle IWL-2400 (Reference 3.8-4).

Sample Selection

ASME Code, Section XI (Reference 3.8-4) requires that measurements and sampling be performed on randomly selected tendons. The PCCV tendons are detensionable and are in compliance with this requirement.

Tendons are to be placed in groups with similar characteristics. For the US-APWR, the two basic groups are the inverted U-tendons and hoop tendons, which consist primarily of cylinder hoop tendons and also a smaller number of dome hoop tendons. The minimum requirements for sample selection are as discussed below. RG 1.35 (Reference 3.8-5) requires a 4% sample with a minimum of four tendons per group and ASME Code, Section XI (Reference 3.8-4) agrees, but there is some relaxation after 10 years. ~~Both types have these amounts divided into two groups. Therefore, t~~The 4% sample is taken as four inverted U tendons and ~~four cylinder~~six horizontal hoop tendons. The six hoop tendons are divided into four cylinder and two dome hoop tendons. This amount also satisfies the minimum number. Two dome hoop tendons are provided in the design as sample tendons since the dome hoop tendons are of a slightly different geometry/ configuration than the cylinder hoop tendons. ~~These sample numbers are also based on the assumption that two tendons from each group may be detensioned at the same time and considering two more for wire or strand loss during construction or due to other reasons. Any hoop tendon that is fixed tendon such that it has lift-off test capability only are in the cylinder near the dome.~~Sample selection for testing of tendons is made on a random basis. Thus, the design permits two tendons from each group to be detensioned for strand removal. Also, the design considers that two additional strands are detensioned during construction due to other reasons. MIC-03-03-00057 MIC-03-03-00057

Acceptance Standards

The acceptance standards for both the RG and ASME Code, Section XI (Reference 3.8-4) are similar and both are satisfied. RG 1.35.1 (Reference 3.8-6) gives guidance on how to determine the tendon prestress loss curve as a function of time. The prestress loss curve is determined based on regression analysis. For the US-APWR PCCV, the curve is for 60 years. A correction is allowed to account for initial installation force variation and elastic losses resulting from when in the prestressing sequence the tendon is tensioned. The acceptance criteria listed below are for values after these corrections have been applied, except the last five items, which apply regardless of corrections.

- The average lift-off of each group is equal to or above the minimum required prestress. For the PCCV, this would mean the average of all four inverted U tendons in the group and then the ~~five~~six hoop tendons in that group. ~~Each of t~~The groups ~~has a~~have different force time loss curves. MIC-03-03-00057

- For each tendon the measured lift-off value is equal to or above the predicted value at that surveillance time on the curve.

The lateral support structure at centerline elevation 42 ft, 7.69 in. is constructed entirely of structural steel. Both support structures are designed considering thermal expansion of piping. The support structure also restrains horizontal movement of the RCPs in the event of an earthquake or other DBAs.

The three support columns carry the vertical loads of the RCP from the reinforced concrete slab at elevation 25 ft, 3 in. The upper and lower ends of the supports are pin-jointed to permit movement of the pumps caused by thermal expansion of piping. Figure 3.8.3-3 depicts the RCP support system.

3.8.3.1.4 Pressurizer Support System

The pressurizer is supported by an upper support structure and a lower support skirt. The upper support structure constructed of four structural steel struts at centerline elevation 110 ft, 9 in. does not restrain movement by thermal expansion, but restrains horizontal movements in the event of design-basis earthquakes or accidents. The lower support structure supports the vertical load through a continuous structural steel skirt welded to the bottom of the pressurizer supported at elevation 59 ft, 1 in. Figure 3.8.3-4 depicts the pressurizer support system.

3.8.3.1.5 Primary Shield Wall

The RV is located at the center of the PCCV. Primary shield walls form the perimeter around the RV, which also serve to support the RV at elevation 35 ft, 10.87in. The top of primary shield wall elevation is 46 ft, 11in. The general ~~primary~~arrangement drawings in Chapter 1 show the location and configuration. Isometrics of the primary shield walls are shown in Figure 3.8.3-5. MIC-03-03-00066

The primary shield wall and other walls inside containment are fabricated as steel-concrete (SC) module walls. The modules are formed using permanently placed carbon steel faceplates and web-plates with a nominal thickness of 1/2 in. The faceplates, connected by tie~~-~~ bars, fabricated from ~~solid~~ carbon steel ~~roundedeformed reinforcing bars~~plate, or by carbon steel web-plates, also function as formwork for concrete placed in the interior. The primary purpose of the tie~~-~~ bars and web-plates is to stiffen and hold together the faceplates during handling, erection, and concrete placement, and to provide out-of-plane shear strength. The nominal pitch of the tie~~-~~ bars is 24 in. for the ~~secondary shield~~SC module walls. The primary functions of the web-plates are to mitigate faceplate stress concentration, maintain the SC module configuration, and stiffen corners of faceplates. Shear studs are welded to ~~the inside faces of~~ the steel faceplates to provide shear transfer between the steel plates and the concrete. Where SC modules intersect, web-plates are installed in-line with faceplates to maintain continuity across the point of intersection. The nominal pitch of studs is 8 in. to 12 in. in both directions. Face~~-~~plates are welded to adjacent plates with full penetration welds so that the weld is at least as strong as the plate. The SC module walls are welded at the base to a continuous embedded plate in the basemat. After erection, concrete is placed between the faceplates. ~~Typical details of the SC modules are shown in Figure 3.8.3-7.~~

MIC-03-03-00066
MIC-03-03-00057
MIC-03-03-00066
MIC-03-03-00057
MIC-03-03-00057
MIC-03-03-00057
MIC-03-03-00057

and specifications applicable to materials, testing and inspections are identified in Subsections 3.8.4.6 and 3.8.4.7.

3.8.3.3 Loads and Load Combinations

Typical loads and load combinations are detailed in Subsection 3.8.4.3. Load combinations to be utilized for the design of the containment internal structure include hydrostatic, pressure, and thermal loads as summarized below. Hydrostatic loads reflect the water inventory and its location during various plant conditions.

Seismic category I concrete structures are designed for impulsive and impactive loads in accordance with the ACI 349-06 Code (Reference 3.8-8), ~~and special provisions of Appendix C of the same code,~~ with exceptions given in RG 1.142 (Reference 3.8-19). Impactive and impulsive loads must be considered concurrent with seismic and other loads (i.e., dead and live load) in determining the required load resistance of structural elements. MIC-03-03-00066

Subcompartment pressure loads are the result of postulated high-energy pipe ruptures. In determining an appropriate equivalent static load for Y_r, Y_j, and Y_m, elasto-plastic behavior is acceptable with appropriate ductility ratios, provided excessive deflections do not result in loss of function of any safety-related system.

3.8.3.3.1 Floor Loads Inside Containment

~~Table 3.8.3-1 shows the type of construction and dead weight of the floor section for various containment internal structure locations.~~ MIC-03-03-00057

The following are the minimum values for live loads used in load combinations involving non-seismic loads. Live loads for the seismic analysis are defined in Subsection 3.8.4.3.

Containment operating deck	950 lb/ft^2 (during maintenance and refueling outages) 200 lb/ft^2 (during normal operation)
Maintenance and service platforms	The load is calculated for individual locations based on the functional requirements and service equipment
All other floors (ground floor and elevated floors, including stairs and walkways)	200 lb/ft^2 (For non-seismic load combinations and for global seismic analysis, this load may be reduced if the equivalent live load on the floor is more than 50 lb/ft^2. The sum of the live load and equivalent live load need not exceed 250 lb/ft^2)

In design reconciliation analysis, if actual loads are determined to be lower than the above loads, the actual loads may be used for reconciliation. Floor live loads for design are not reduced below 100 lb/ft^2.

3.8.3.3.5 Accident Thermal Load (T_a)

Thermal loads due to temperature gradients caused by the postulated pipe breaks are considered in the design. The temperature gradients are calculated using the temperatures corresponding to LOCA and MSLB, or a spent fuel pit accident, and are presented in Table 3.8.1-3. Local areas are designed for the elevated temperature effects and the loads resulting from the postulated accidents.

~~During a postulated pipe break, the concrete walls in the vicinity experience temperature increases at the surface following the accident. However, since the concrete is a poor heat conductor, considerable time must elapse before the entire wall experiences an increase in the temperature. Other loads such as accident pressure load, seismic load, etc., are of very short duration. This difference in the transients is considered when combining T_a with other loads.~~ MIC-03-03-00066

Temperatures during an accident do not exceed ~~3~~450°F at the surface. However, local areas are allowed to reach 650°F from steam or water jets in the event of a pipe failure in accordance with Section E.4.2 of ACI 349-06 Appendix E. Although the 450°F accident temperatures exceed the 350°F surface temperature limit of ACI 349-06 Section E.4.2, the accident temperatures do not reduce the design strengths of the CIS SC modules. This assessment is described in Section 9.0 of Technical Report MUAP-11019 and Appendix B, Section 10 of MUAP-11013. For the reinforced concrete slabs in the CIS, temperatures during an accident do not exceed 350°F at the surface. MIC-03-03-00057

~~General design requirements for concrete subject to thermal loads may be found in Appendix A of ACI 349 (Reference 3.8-8).~~ MIC-03-03-00066

3.8.3.3.6 Accident Thermal Pipe Reaction (R_a)

Pipe and equipment reactions under thermal conditions are generated by the postulated pipe break and includes R_o (see Subsection 3.8.4.3).

3.8.3.3.7 Reaction Due to Pipe Ruptures (Y_r)

The load on a structure generated by the reaction of a ruptured high-energy pipe during the postulated event includes an appropriate dynamic load factor. The time dependent nature of the load and the ability of the structure to deform beyond yield are considered in establishing the structural capacity necessary to resist the effects of Y_r.

3.8.3.3.8 Jet Impingement (Y_j)

The load on a structure generated by the jet impingement from a ruptured high-energy pipe during a postulated event includes an appropriate dynamic load factor. The time-dependent nature of the load and the ability of the structure to deform beyond yield are considered in establishing the structural capacity necessary to resist the effects of Y_j. The dynamic load factor is calculated using a long duration step function for the load. The target resistance is idealized as bilinear elasto-perfectly plastic.

3.8.3.3.9 Impact of Ruptured Pipe (Y_m)

The load on a structure or a pipe restraint resulting from the impact of a ruptured high-energy pipe during the postulated event includes an appropriate dynamic load factor. The type of impact (i.e., plastic, elastic), together with the ability of the structure to deform beyond yield are considered in establishing the structural capacity necessary to resist the impact.

3.8.3.4 Design and Analysis Procedures

~~Concrete and steel composites are commonly used in construction because of the inherent benefits of the steel tensile strength in concrete sections. The fundamental difference between the conventional reinforced concrete and SC modular construction is that the reinforcement and formwork of conventional reinforced concrete is replaced by the steel faceplates of the SC. For walls within the US-APWR, additional benefits are realized by providing formwork during construction, improved construction staging and schedule, continuous steel surfaces for welding of field attachments, and impactive/ impulsive capacities as applicable. If required to be qualified as radiation shielding, the requirements and recommended practices are maintained in accordance with RG 1.69 (Reference 3.8-20). Assurances that SC modules for interior compartments of the US-APWR meet or exceed the requirements of ACI 349 (Reference 3.8-8) are provided by the following design and analysis procedures.Assurances that SC modules for interior compartments of the US-APWR meet or exceed the strength requirements of ACI 349-06 (Reference 3.8-8) are provided by the following design and analysis procedures.~~ MIC-03-03-00057 DCD_03.07.02-35 MIC-03-03-00066

~~The permanently placedstay-in-place faceplates act as forms during the placement of concrete. Plate stresses occurring during concrete placement are conservatively assumed to be simply supported spans between tie bars. Faceplates fabricated from A572 high-strength low-alloy Columbium Vanadium structural steel provide minimum yield strength of 50 ksi or greater, and maintain out-of-plane plate deflection to within code allowables.~~

~~Stresses are induced on faceplates acting as formwork during concrete placement, however, they are not applicable during other load combinations. After concrete curing, the SC module performs as a composite section of concrete with outer faceplates acting as either compression orand tension reinforcement. The composite section is designed to allow faceplate yielding prior to the concrete reaching its strain limit of 0.003 in. per in. Under tensile straining, the residual stress that was initiated by concrete placement is naturally relieved. While the formwork is permanently placed, the stresses generated by construction activities are therefore not applicable during other load combinations.~~

~~The SC module forms a composite section once the concrete has reached sufficient strength, consisting of steel faceplates that carry in-plane tension or compression from axial loads and out-of-plane bendingresist in-plane shear and axial tension, as well as out-of-plane moments. Structural behavior of composite sections used as SC modules inside containment is, therefore, similar to conventional concrete reinforced by steel. Research regarding in-plane loading of composite sections consisting of steel faceplates and concrete infill is described in "Experimental Study on Steel Plate Reinforced Concrete Shear Walls with Joint Bars" (Reference 3.8-21) and "A Compression and Shear Loading Test of Concrete Filled Steel Bearing Wall" (Reference 3.8-22). Out-of-plane loading~~

~~research is provided by "Experimental Studies on Composite Members for Artic Offshore Structures, Steel/Concrete Composite Structural Systems" (Reference 3.8-23), "Strength of Composite System Ice-Resisting Structures, Steel/Concrete Composite Structural Systems" (Reference 3.8-24), "Design and Behaviour of Composite Ice-Resisting Walls, Steel/Concrete Composite Structural Systems" (Reference 3.8-25), and "Tests on Composite Ice-Resisting Walls Steel/Concrete Composite Structural Systems" (Reference 3.8-26). In addition, "1/10th Scale Model Test of Inner Concrete Structure Composed of Concrete Filled Steel Bearing Wall" (Reference 3.8-27) provides research regarding in-plane loading of composite sections, and supports the conclusion there are significant advantages of SC modules over conventional reinforced concrete, such as high strength, high ductility, and less decrease of stiffness, over reinforced concrete elements of equivalent thickness and reinforcement ratios. Further, "A Study on the Structural Performance of SC Thick Walls" (Reference 3.8-69) reflects the experimental results of a 1/6th scale test which demonstrates the seismic behavior of the primary shield wall.~~ MIC-03-03-00057 DCD_03.07.02-35

~~Shear connector spacing to plate thickness ratio is sufficient to prevent local buckling and allow development of full compressive strength.~~ MIC-03-03-00066

~~Methods of analysis for the SC modules are similar to the methods used for reinforced concrete. Table 3.8.3-3 summarizes the modeling and analytical methods used for SC modules inside containment. The determination of section properties are in accordance with ACI 349 (Reference 3.8-8). For all loads, the analyses use the monolithic (uncracked) stiffness of each concrete element. For thermal loads, design forces are calculated by multiplying the reduction ratio α, considering the reduction of stiffness by cracking to the result values of above analysis. The reduction ratio α is set to 0.5 as the reduction ratio of flexural stiffness caused by cracking for the typical member. For example, the flexural stiffness of cracked section for 48 in. wall with 0.5 in. plates assuming zero tensile strength of concrete is 22.2 by 10^9 lbs-in.^{2}/in., and the reduction ratio calculated by this value and elastic flexural stiffness (47.5 x 10^9 lbs-in.^{2}/in.) is 0.47.~~

~~Table 3.8.3-4 summarizes axial, in-plane shear and out-of-plane flexural stiffness properties of the 56 in., 48 in. and 39 in. walls based on a series of different assumptions. The stiffnesses are expressed for unit length and height of each wall.~~

~~Case 1 assumes monolithic behavior of the steel plate and uncracked concrete. This stiffness is the basis for the stiffness of the SC modules in the seismic analyses and the stress analysis.~~

~~Case 2 assumes that the concrete in tension has no stiffness. For the flexural stiffness this is the conventional stiffness value used in working stress design of reinforced concrete sections.~~The CIS is a complex structure that includes several different structure categories. As discussed in previous sections, a significant portion of the CIS consists of SC walls, including the primary shield walls, the secondary shield walls, the walls of the refueling cavity, and the walls of the RWSP.

As presented in Technical Report MUAP-11005 (Reference 3.8-63), experimental investigations have been conducted in the past to evaluate the behavior of the SC walls with geometries representative of those in the US-APWR CIS, as follows:

MIC-03-03-00057

- 1/10th scale cyclic pushover test of a complete CIS
- 1/6th scale cyclic pushover test of the primary shield structure
- Component in-plane shear tests of SC walls with flanges
- Component tests of SC wall panels without flanges subjected to combined axial compression and cyclic in-plane shear
- Component out-of-plane shear tests of SC beams
- Component axial compression test of SC stub columns
- Component tests on the effects of thermal gradients on cracking and mechanical behavior of SC walls

Technical Report MUAP-11005 Appendices A, B, C, and D explain the correlation of the SC wall geometries considered in these tests to the SC walls in the US-APWR CIS. In addition, the technical report describes the key results of these tests that demonstrates the performance of SC walls under the design loading conditions for the CIS, including seismic and thermal loading.

The experimental results presented in Technical Report MUAP-11005 (Reference 3.8-63) also demonstrate the similarity of SC wall behavior to that of standard reinforced concrete walls. SC walls are similar to reinforced concrete walls, as they both consist of thick concrete sections that are reinforced by steel. In SC walls, the concrete section is reinforced with steel faceplates that are anchored to the concrete using shear studs and connected to each other using tie bars. In reinforced concrete walls, the concrete section is reinforced with orthogonal grids of steel rebars that are embedded within the concrete.

In several aspects of structural behavior, such as axial tension, compression, flexure, and out-of-plane shear, the behavior of SC walls is very similar to that of reinforced concrete walls. In other aspects (e.g., in-plane shear and thermal effects), the general behavior is similar to that of reinforced concrete, but there are some differences that must be addressed in the design of the SC walls.

The design of the CIS SC walls is based on ACI 349-06 (Reference 3.3-8) code provisions. The overall approach for confirming the applicability of the ACI 349-06 (Reference 3.8-8) code equations, evaluating the results of the small-scale (1/10th and 1/6th scale) tests, and developing SC wall section details that prevent SC-specific limit states not specifically addressed in the ACI 349-06 code were evaluated as described in Technical Report MUAP-11013 (Reference 3.8-68).

The results of the 1/6th scale and 1/10th scale test results have been evaluated and analyzed to confirm the performance of containment internal structures constructed with SC modules under seismic loading up to SSE and beyond SSE loading levels. Additionally, the component-level tests were also evaluated using benchmarked nonlinear analysis methods to confirm that the behavior of SC walls is appropriately addressed

using ACI 349-06 provisions. The benchmarked nonlinear analysis of these test results is summarized in MUAP-11013 Appendix A. MIC-03-03-00057

To further confirm the applicability of the ACI 349-06 design provisions for the US-APWR specific SC module design details, a series of confirmatory physical tests were conducted. The results of these tests demonstrate behavior of the SC walls and confirm the conservatism of the ACI 349-06 design strength equations. The US-APWR confirmatory testing program is further summarized in Technical Report MUAP-11013 Appendix B.

The analysis and design procedures for the CIS are organized into three sets of criteria, as follows:

Stiffness and Damping: The stiffness and damping terms used for analysis of the CIS are defined for six structure categories and two basic loading conditions, as described in Table 3.8.3-4 and following in this section. This is also summarized in detail in Technical Report MUAP-11018 (Reference 3.8-70).

SC Wall Design Criteria: The design criteria for the US-APWR SC walls address the SC specific design issues and limit states observed in the experimental database, and present the detailing approaches required to prevent these limit states from governing the design. The design criteria also addresses the applicability of the ACI 349-06 code provisions for each loading condition, including axial tension, axial compression, out-of-plane flexure, out-of-plane shear, in-plane shear, design for combined forces, and accident thermal considerations. Based upon observation of behavior in the experimental research, conservative forms of the ACI 349-06 (Reference 3.8-8) code provisions are identified as required. The key aspects of these design procedures are summarized in Subsection 3.8.3.4.5, and in greater detail in Technical Report MUAP-11019 (Reference 3.8-71).

SC Wall Connection Design and Detailing: The design criteria for SC wall connection design and detailing addresses design procedures for all anchorages and connections in the CIS involving SC walls. The criteria includes two connection design philosophies that are intended to ensure sufficient strength and ductility of the SC wall connections. These include the full-strength design philosophy, which designs the connection to develop the expected strength of the weaker of the connected parts, and the overstrength design philosophy, which provides significant overstrength (e.g., 200%) with respect to the design demands on the connection. The full-strength design philosophy is intended to be used for all SC wall connections in the US-APWR CIS. The overstrength design philosophy is to be utilized only in limited circumstances where a full strength connection cannot be provided. The design criteria are in accordance with ACI 349-06 provisions for anchorages and connections. In addition, the criteria require that the SC wall anchorage connection to the basemat (e.g., welding faceplates and studs to baseplate and couplers to baseplate) be designed per the provisions of both ACI 349-06 and ASME Section III Division 2 because this connection is at a jurisdictional boundary with the containment pressure boundary. Three connections are designed as representative using the full strength design approach, as summarized in Subsection 3.8.3.5.2. The SC wall connection design and detailing criteria are summarized in further detail in Technical Report MUAP-11020 (Reference 3.8-72).

Summary of Stiffness and Damping for Analysis: MIC-03-03-00057

The containment internal structure is unique among the R/B complex structures in that it is comprised of a number of different structural types. The structural types include composite SC walls of varying thickness, massive reinforced concrete sections, and reinforced concrete slabs. These structures experience varying levels of stress and resultant concrete cracking under the seismic and accident thermal loading applied to the containment internal structure. Each structural type exhibits unique stiffness and damping characteristics before and after cracking. Thus, it is not appropriate to apply a uniform stiffness reduction to the entire containment internal structure for the SSI analyses of the R/B complex. Each structural component is assigned stiffness and damping values appropriate for its structural type and estimated cracking levels. This assignment is simplified by grouping structural components into six structural categories with common behavior. Stiffness and damping values are then defined for each category under two basic loading conditions that encompass the full range of stresses and resultant cracking anticipated for the containment internal structure seismic response. MIC-03-03-00066 DCD_03.07.02-35 MIC-03-03-00066

The six structural categories defined for stiffness and damping characterization are described below and summarized in Table 3.8.3-4. ~~The~~As discussed in Technical Report MUAP-11018 (Reference 3.8-70), the values are derived from supporting experimental data for the SC modules and from industry standards for reinforced concrete structures. Plan and elevation views illustrating the use of each of the six structural categories are presented in Figures 3.8.3-12 through 3.8.3-18. MIC-03-03-00057 DCD_03.07.02-35

Overall thicknesses of the single-celled SC walls vary from 36” to 67”, while the multi-celled primary shielding SC walls have overall thickness in excess of 9’-11”. The range of experimental data establishing the composite stiffness characteristics of SC walls is applicable to sections with overall thickness less than or equal to 56” and steel plate reinforcement ratio (ρ) greater than 1.5%. MIC-03-03-00066 MIC-03-03-00057

$$\rho = 2 \cdot t_p / T > 0.015$$

Where

t_p = faceplate thickness, MIC-03-03-00057

T = overall wall thickness

The SC walls are separated into three categories, as follows:

CIS Category 1: SC Walls with thickness less than or equal to 56 in. These SC walls have material and geometric parameters that are within the range of the experimental database. This category includes the majority of the secondary shielding walls in the containment internal structure. The most common SC wall is 48 in. thick with 0.5 in. thick steel faceplates. MIC-03-03-00057

CIS Category 2: SC Walls with thickness greater than 56 in. This category includes a relatively small portion of the containment internal structure SC walls with thicknesses ranging from 58.5 in. to 67 in. MIC-03-03-00057

CIS Category 3: Primary Shield Walls. The primary shield walls below elevation 35'-11" range in thickness from 9'-11" to 15'-4". They have a multi-cellular arrangement comprised of two steel faceplates, a mid-thickness steel plate, and numerous transverse web plates. MIC-03-03-00066 MIC-03-03-00057

Non-SC structural components of the CIS are separated into three additional categories, as follows: MIC-03-03-00057

CIS Category 4: Reinforced concrete slabs. Standard reinforced concrete floor slabs are used at various elevations throughout the containment internal structure. MIC-03-03-00057

CIS Category 5: Massive reinforced concrete. This category includes the thick reinforced concrete blocks at the base of the containment internal structure that support the steam generators and reactor coolant pumps. These blocks are nominally 8 to 32 feet deep and are anchored to the basemat of the reactor building complex with steel reinforcement. MIC-03-03-00057

CIS Category 6: Steel structures with nonstructural concrete infill. These structures consist of steel plates or steel shape grillages with nonstructural concrete provided for shielding purposes. MIC-03-03-00057

~~The report "1/10th Scale Model Test of Inner Concrete Structure Composed of Concrete Filled Steel Bearing Wall" (Reference 3.8-27) provides damping of the SC modules based on the cyclic load tests of an containment internal structure model. The SC module exhibited 5 % equivalent viscous damping at the design load level. This remained nearly constant up to the load level where yielding was reached in the steel plate. Therefore, dynamic analyses as described in Subsection 3.7.1 are performed using 7 % damping for the reinforced concrete and 5 % for the SC modules.~~

Discussion of Basic Loading Conditions for Consideration of Concrete Cracking: MIC-03-03-00057

~~The containment internal structure seismic analysis must consider the stiffness and damping levels appropriate for two basic loading conditions:~~The design loading conditions for the CIS are condensed to two basic loading conditions that are evaluated to assess the range of concrete cracking. This is discussed in further detail in MUAP-11018 Section 3.1 (Reference 3.8-63).

Condition A: Seismic + Operating Thermal. The normal operating thermal loading involves ambient temperatures of 105°F to 120°F, which are not anticipated to cause cracking that would significantly reduce the stiffness of the SC modules or any of the reinforced concrete structures. The operating temperature of the reactor cavity is 150°F, such that a linear temperature distribution is postulated through the nominally 10-ft thickness of the primary shielding walls, varying from 150°F at the interior face to 105-120°F at the exterior face. ~~This~~As discussed in Technical Report MUAP-11018, Appendix F (Reference 3.8-70), this shallow linear gradient is not anticipated to cause significant cracking of the primary shielding walls. Thus, the stiffness for Condition A is estimated by evaluating stresses resulting from the seismic loading condition only. MIC-03-03-00066 MIC-03-03-00057 DCD_03.07.02-35

Condition B: Seismic + Accident Thermal. The accident thermal conditions postulated involve initial temperatures of ~~580~~450 to 550°F on the pipe-rupture side of a given wall, with an immediate increase of temperature on the opposite face to 300 to 340°F. Within MIC-03-03-00066 MIC-03-03-00057

approximately 10,000 seconds ~~(17 minutes) the two face temperatures~~(2.8 hours), the temperatures on each face equilibrate to 300°F~~within 10 seconds~~, which sets up ~~a~~ parabolic (U-shaped) temperature distributions through the thickness of the SC walls. MIC-03-03-00057

This distribution will cause through-thickness cracks in the SC walls. These cracks will reduce the in-plane shear stiffness, cause overall thermal deformations and out-of-plane flexural cracking at restraints. MIC-03-03-00066

Estimated Stiffness for Each Category and Loading Condition: DCD_03.07.02-35

The following is a summary of the estimated stiffness for each CIS structural category and loading condition. The stiffness terms summarized below are utilized in the two SSI analysis models involving upper and lower bound stiffness terms (as discussed in Section 3.7.2,) and in the two more detailed CIS structural design models with stiffnesses corresponding to Conditions A and B. Further discussion of the structural design analysis models is given in Section 3.8.3.4.1. Further detail on the basis for the CIS Condition A and B stiffness terms is provided in Technical Report MUAP-11018 (Reference 3.8-70). MIC-03-03-00057

Category 1, Condition A: An assessment of the maximum seismic in-plane shear demands in each SC wall of the containment internal structures indicated that these demands were generally lower than the cracking threshold for in-plane shear. Thus, the best estimate in-plane shear stiffness for Condition A is that of the uncracked composite section (i.e., $G_c A_c + G_s A_s$).

where MIC-03-03-00066

G_c = shear modulus of concrete

A_c = ~~gross~~ area of concrete per unit length MIC-03-03-00057

G_s = shear modulus of steel

A_s = ~~2·(face plate thickness)~~area of steel per unit length MIC-03-03-00057

Note that the cracking threshold for SC walls was assumed at a concrete stress of $2\sqrt{f'_c}$. Typically the cracking threshold for concrete is related to concrete stress of $4\sqrt{f'_c}$, but the limit for SC walls is reduced to account for shrinkage and other effects, as described in ~~In-Plane Behavior of Concrete Filled Steel (CFS) Elements, Presentation, Enclosure 1 to DCP_NRC_00278 (Reference 3.8-67). This reduction is also corroborated by experimental data found in Study on Steel Plate Reinforced Concrete Panels Subjected to Cyclic In-plane Shear (Reference 3.8-61)~~Technical Report MUAP-11018, Section 4.1.2 (Reference 3.8-70). In addition, the uncracked stiffness estimated for this condition takes into account the recommendation to increase calculated secant stiffness values by a factor of 1.25 to obtain effective in-plane shear stiffness values appropriate for use in an equivalent linear elastic model as described in ~~Relationship Between Effective Linear Stiffness and Secant Stiffness for Pinched In-Plane Shear Behavior or Shear Walls (Reference 3.8-62)~~Technical Report MUAP-11018, Section 4.1.4 (Reference 3.8-70). Note that ~~an~~the effective stiffness values ~~that results~~resulting from calculation of 1.25 MIC-03-03-00057 DCD_03.07.02-35 MIC-03-03-00057

times the secant stiffness ~~must not be taken to~~are not to exceed the initial uncracked stiffness. MIC-03-03-00057

As discussed in Technical Report MUAP-11018 Appendix E, (Reference 3.8-70), ~~E~~experimental data indicates there is little to no uncracked out-of-plane flexural stiffness manifest in SC walls. This is due to effects of shrinkage cracking and partial composite action resulting from the discrete nature of the shear connectors (studs) between the face plates and the concrete core~~, as described by In-plane Shear Stiffness Recommendation (Reference 3.8-59)~~. Instead, the stiffness ($E_c I_{ct}$) associated with the cracked-transformed section is exhibited very early during the application of out-of-plane moments to SC walls. DCD_03.07.02-35 MIC-03-03-00057 MIC-03-03-00066

where

E_c = modulus of elasticity of concrete

I_{ct} = cracked-transformed moment of inertia of concrete

Category 1, Condition B: The through-thickness temperature gradient resulting from the accident thermal loading can cause significant cracking that reduces the in-plane shear stiffness of the SC walls. An empirical relationship providing a best-estimate of secant in-plane shear stiffness of cracked SC walls is as follows, and as described ~~by In-plane Shear Stiffness Recommendation (Reference 3.8-59)~~in Technical Report MUAP-11018, Appendix C (Reference 3.8-70): MIC-03-03-00057

$$K_{cr} = 0.5(\bar{\rho}^{-0.42})G_s A_s$$

where

$$\bar{\rho} = \frac{A_s F_y}{\sqrt{f'_c} A_c}$$

G_s = shear modulus of steel

A_s = ~~2·(face plate thickness)~~area of steel per unit length MIC-03-03-00057

F_y = yield strength of steel plates

f'_c = specified compressive strength of concrete

A_c = ~~unit~~ area of concrete core per unit length MIC-03-03-00057

Category 2, Condition A: Stress evaluation indicates these thick walls remain uncracked for Condition A. Thus, uncracked stiffness values of the concrete section shall be used; i.e., $G_c A_c$ for in-plane shear and $E_c I_c$ for out-of-plane flexure. MIC-03-03-00066

where MIC-03-03-00066

G_c = shear modulus of concrete

A_c = ~~gross~~ area of concrete per unit length DCD_03.07.02-35

E_c = modulus of elasticity of concrete MIC-03-03-00057

I_c = moment of inertia of concrete MIC-03-03-00066

Category 2, Condition B: Stiffness of these walls shall account for cracking due to accidental thermal loading. Stiffness values of $0.5G_cA_c$ and $0.5E_cI_c$ are assigned per the recommendations for cracked concrete walls as shown in ~~Seismic Design Criteria for Structures, Systems, and Components~~ASCE 43-05 (Reference 3.8-60). MIC-03-03-00057

Category 3, Condition A: The linear temperature gradient through the primary shield walls for normal operating conditions is not anticipated to cause significant cracking, and seismic demands on these walls are ~~limited~~relatively limited in comparison to wall strength capabilities. Thus the primary shield wall stiffness shall be modeled as that of uncracked concrete (G_cA_c and E_cI_c). No credit is taken for the stiffness of the steel plates. MIC-03-03-00057

Category 3, Condition B: The accident thermal loading conditions are anticipated to cause only localized cracking in the thick primary shielding walls, which are largely enclosed by the mass concrete (Category 5) at the base of the containment internal structures. Thus, the stiffness for this condition is the same as that assigned for Condition A (uncracked).

Category 4, Condition A: In-plane shear stiffness of the reinforced concrete slabs shall be that of the gross concrete section (G_cA_c, in accordance with ~~Seismic Design Criteria for Structures, Systems, and Components~~ASCE 43-05 (Reference 3.8-60)). Out-of-plane flexural stiffness is equal to that of the gross concrete section (E_cI_c), as seismic-induced moments in the slabs are shown generally to be less than cracking moments (M_{cr}): MIC-03-03-00057 MIC-03-03-00066

$$M_{cr} = f_r \cdot S$$

where

S = gross section modulus

f_r = modulus of rupture ~~taken equal to $7.5\sqrt{f'_c}$~~ of concrete MIC-03-03-00057

Category 4, Condition B: In-plane shear stiffness of the reinforced concrete slabs for this condition shall also be that of the gross concrete section (G_cA_c). Out-of-plane flexural stiffness is taken as $0.5E_cI_c$, as described by ~~Seismic Design Criteria for Structures, Systems, and Components~~ASCE 43-05 (Reference 3.8-60). MIC-03-03-00057

Category 5 (both conditions): No significant cracking is anticipated in the massive reinforced concrete at the base of the structure as a result of either seismic or accident

thermal loading. Thus, the stiffness is taken to be equal to that of uncracked concrete for both the A and B loading conditions. DCD_03.07.02-35

Category 6 (both conditions): The stiffness of in-fill concrete provided for shielding purposes is not modeled for ~~either~~the A and B loading conditions; only the mass of these sections is included. For the pressurizer support platform, which is comprised of a grillage of steel shapes with in-fill concrete, only the stiffness of the steel members is modeled. MIC-03-03-00057

Damping values are assigned to each structural category based on the estimated level of cracking. A damping value of 4% is assigned to composite SC walls with uncracked conditions (Condition A), and 5% when significant cracking is anticipated (Condition B). This is based on the results of the 1/10th scale test discussed in Technical Report MUAP-~~11005-P~~10002 (Reference 3.8-~~63~~80). For walls and slabs modeled as reinforced concrete structures, 4% damping is specified in RG 1.61 (Reference 3.8-64) for the limited levels of cracking associated with the OBE, while 7% damping is specified for cracked response exhibited during SSE loading. ~~Finally, t~~The massive concrete in the containment internal structures (Category 5) is not expected to exhibit significant cracking, such that 4% damping is considered appropriate in all cases. It is noted that the structural steel members within the CIS are very limited in scope relative to the mass and stiffness of the SC and RC members in the CIS. Recognizing that the amplified seismic response of the containment internal structure is dominated by the response of the SC walls, constant damping ratios of 4% for Condition A and 5% for Condition B are conservatively used for the seismic response analyses (See Table 3.8.3-4). MIC-03-03-00066 MIC-03-03-00057 MIC-03-03-00057 MIC-03-03-00066

3.8.3.4.1 SC Module Stress Analyses

~~The design forces and moments for each member of the containment internal structure are calculated by the stress analysis using a three-dimensional FE model. The model is shown in Figure 3.8.3-10. The SC modules are simulated within the FE model using three-dimensional shell plate bending elements. Equivalent elastic stiffnesses of the SC modules are computed as shown belowabove. The application of more detailed FE analysis is acceptable for qualifying modules subject to extreme conditions such as high accident temperatures. The shell element properties are computed using the combined concrete section and the steel faceplates of the SC modules. This representation models the composite behavior of the steel and concrete.~~ MIC-03-03-00057 DCD_03.07.02-35 MIC-03-03-00066 MIC-03-03-00066 DCD_03.07.02-35

- ~~Axial and Shear Stiffnesses of SC Modules:~~

  $\cancel{\Sigma EA = E_c A_c + E_s A_s, \Sigma GA = G_c A_c + G_s A_s}$

  $\cancel{A_c = L(t - 2t_s), A_s = 2Lt_s, G_c = E_c/2(1+\nu_c), G_s = E_s/2(1+\nu_s)}$

- ~~Bending Stiffness of SC Modules:~~

  $\cancel{\Sigma EI = E_c I_c + E_s I_s}$

  $\cancel{I_c = L(t - 2t_s)^3/12, I_s = Lt^3/12 - I_c}$

~~where:~~

DCD_03.07.02-35
MIC-03-03-00057

~~E_c or E_s = modulus of elasticity for concrete or steel~~

~~ν_c or ν_s = Poisson's ratio for concrete or steel~~

~~L = length of SC module~~

~~t = thickness of SC module~~

~~t_s = thickness of plate on each face of SC module~~

As discussed in Technical Report MUAP-11013 Section 3.2 (Reference 3.8-68), the design forces and moments for each member of the containment internal structure are calculated by stress analysis using two detailed three-dimensional FE models with stiffness and damping corresponding to loading Conditions A and B. As discussed in Technical Report MUAP-11013 Section 3.2, the design forces and moments for each member of the CIS are calculated by stress analysis using a detailed three-dimensional model. Table 3.8.3-3 summarizes the analysis methods and objectives for the FE analyses performed for structural design. The geometry and element mesh of the detailed FE models are shown in Figure 3.8.3-10. Table 3.8.3-3 summarizes the objectives, analysis methods, and boundary conditions for the FE analyses performed with the detailed three-dimensional models.

As shown in Figure 3.8.3-10, the Category 1 and 2 SC modules are simulated within the detailed FE model using three-dimensional shell elements. The Category 3 (primary shield) SC modules are modeled using three-dimensional solid elements. Equivalent elastic stiffness constants are computed for each of the SC walls, as well as the RC slabs, to achieve the stiffness terms identified for Conditions A and B summarized above in Subsection 3.8.3.4 and in Technical Report MUAP-11018 (Reference 3.8-70). The method of calculating the equivalent elastic constants is explained in Section 8.0 of Technical Report MUAP-11018.

To generate the SSE load cases for structural design, response spectrum analysis is performed on each of the two detailed FE models (Condition A and Condition B). The inputs to both of these response spectrum analyses are the broadened, enveloped ARS generated at the base of the CIS by the SSI analyses. Likewise, each of the other design load cases (such as dead load, live load, and fluid load) are also run on each of the two detailed FE models, and combined with the corresponding SSE load case according to the applicable design loading combinations summarized in Table 3.8.4-3. This results in two sets of design loading combinations for the CIS; one set generated with the Condition A stiffness and a second set generated with the Condition B stiffness. The complete set of load combination results is then considered in the verification of the structure for the applied loads.

3.8.3.4.2 Hydrodynamic Analyses

The vertical and lateral pressures of liquids inside containment are treated as dead loads. Structures supporting fluid loads during normal operation and accident conditions are designed for the hydrostatic as well as hydrodynamic loads as discussed in Subsection 3.7.3.9. The hydrodynamic analyses take into account the flexibility of walls in

considering fluid-structure interaction. Sloshing height, however, is calculated using a conservative simplified assumption of a rigid tank shell in accordance with guidance provided in ASCE 4-98 (Reference 3.8-34), Subsection 3.5.4.3.

3.8.3.4.3 Thermal Analyses

The RWSP water and containment operating atmosphere~~'s~~ temperatures ~~is~~are considered stable. The operating thermal load for each concrete member is calculated as the average and gradient based on this condition. The stress analysis is carried out by inputting these loads ~~into the corresponding part of R/B whole FE model. The normal thermal stresses for design are calculated in accordance with Appendix A of ACI 349 (Reference 3.8-8). The analysis reduction factor and modeling methods are shown in Table 3.8.3-3 and Table 3.8.3-4~~into a 3D FE model of the containment internal structures and the R/B basemat. For thermal effects on dynamic response, see the discussion of stiffness reductions due to thermal loading in Subsection 3.8.3.4. MIC-03-03-00057 MIC-03-03-00066 DCD_03.07.02-35 MIC-03-03-00057

The RWSP water and containment atmosphere are subject to temperature transients in the event of a LOCA as described in Subsection 3.8.3.3. The accident temperature transients result in a nonlinear temperature distribution within the members. Temperatures within the concrete members are calculated in a unidimensional heat flow analysis. The accident thermal load (average and equivalent linear gradients) is calculated from this analysis, at selected times during the transient.

The stress analysis for accident thermal loading is carried out by inputting the accident thermal load into a ~~3D~~three dimensional FE model of the ~~containment internal structures~~CIS and the portion of the R/B basemat to which the CIS is connected.~~the corresponding part of R/B whole FE model, as well as other parts. The stresses of containment are used for containment design. Though the stresses of containment internal structure are also obtained at the same time, since these self-limiting stresses are released in ultimate condition under such as extreme and abnormal load conditions, they are not taken into account in calculation of required reinforcement steel.~~ ~~This~~Inclusion of the basemat in the model is necessary to obtain realistic restraint of the structure walls at the basemat connection. The SC walls and reinforced concrete slabs in the containment internal structures are assigned the reduced stiffness values resulting from thermally induced cracking, as identified for Condition "B" in Technical Report MUAP-11018 (Reference 3.8-70) and in Subsection 3.8.3.4 above. The moments and forces induced in the modeled structure are then included in the ACI 349-06 (Reference 3.8-8) design load combinations that involve accident thermal loading. MIC-03-03-00066 MIC-03-03-00057 MIC-03-03-00057 MIC-03-03-00057

Thermal transients for the DBAs are described in Section 6.3.

3.8.3.4.4 Design Procedures

~~The concrete members of the containment internal structure are designed by the strength method, as specified in the ACI "Code Requirements for Nuclear Safety Related Structures", ACI 349 (Reference 3.8-8).~~ DCD_03.07.02-35

~~The primary and secondary shield walls, RWSP, refueling cavity, and other structural walls are designed using SC modules. SC modules are designed as reinforced concrete structures in accordance with the requirements of ACI 349 (Reference 3.8-8), as~~

~~supplemented in the following paragraphs.~~The reinforced concrete members of the containment internal structure are designed by the strength method, as specified in the ACI 349-06 (Reference 3.8-8). MIC-03-03-00066

The primary and secondary shield walls, RWSP, refueling cavity, and other structural walls are designed using SC modules. SC modules are designed using the methodology of reinforced concrete structures in accordance with ACI 349-06 (Reference 3.8-8), as supplemented in Technical Reports MUAP-11019 (Reference 3.8-71) and MUAP-11020 (Reference 3.8-72). DCD_03.07.02-35 MIC-03-03-00066

~~Floor slabs of reinforced concrete~~The concrete floor slabs and massive concrete sections near the base of the CIS are designed as reinforced concrete structures in accordance with ~~ACI 349~~ACI 349-06 (Reference 3.8-8). The floor~~s of~~ slabs at elevation 76 ft, 5 in. (Operating floor) and elevation 50 ft, 2 in. are supported by structural steel framing. MIC-03-03-00057 MIC-03-03-00066

Methods of analysis used are based on accepted principles of structural mechanics and are consistent with the geometry and boundary conditions of the structures.

The safe shutdown earthquake loads are determined from the results of seismic response analysis described in Section 3.7.

The determination of pressure and temperature loads due to pipe breaks is described in Subsections 3.6.1 and 6.2.1.2. Subcompartments inside containment containing high energy piping are designed for pressurization loads of 2 to 39 psi.

Determination of RCL support loads is described in Subsection 3.9.3. Design of the RCL supports ~~are~~is in accordance with ASME Code, Section III, Division 1, Subsection NF (Reference 3.8-2) as described in Subsections 3.9.3. MIC-03-03-00057

Computer codes used are general purpose codes. The code development, verification, validation, configuration control, and error reporting and resolution are according to the Quality Assurance requirements of Chapter 17.

3.8.3.4.5 SC Modules Design and Analysis

The SC modules are designed for dead, live, operating and accident thermal, accident pressure, and safe shutdown earthquake loads. The RWSP walls are also designed for the hydrostatic head due to the water in the pit and the hydrodynamic pressure effects of the water due to the safe shutdown earthquake loads. The walls of the refueling cavity are also designed for the hydrostatic head due to the water in the refueling cavity during refueling operations. MIC-03-03-00057 MIC-03-03-00057

~~Figure 3.8.3-7 shows the typical design details of the SC modules, typical configuration of the SC modules, typical anchorages of the SC modules to the reinforced base concrete, and connections between adjacent walls. SC modules are designed as reinforced concrete structures in accordance with the requirements of ACI 349 (Reference 3.8-8), as supplemented in the following paragraphs. The faceplates are considered as the reinforcing steel, bonded to the concrete by headed studs. The design of critical sections is described in Subsection 3.8.3.5.~~Figure 3.8.3-7 shows the typical design details of the SC modules, ~~typical configuration of the SC modules,~~ typical anchorages of the SC DCD_03.07.02-35 MIC-03-03-00057

modules to the reinforced concrete basemat, ~~and~~ connections between adjacent walls, and connections between reinforced concrete slabs and SC walls. SC modules are designed using the methodology of reinforced concrete structures in accordance with ACI 349-06 (Reference 3.8-8), as supplemented in Technical Reports MUAP-11019 (Reference 3.8-71) and MUAP-11020 (Reference 3.8-72). The faceplates are considered as the reinforcing steel, bonded to the concrete by headed studs. ~~The design of critical sections is described in Subsection 3.8.3.5.~~ MIC-03-03-00057 MIC-03-03-00066 MIC-03-03-00057

The procedures of Technical Report MUAP-11019 (Reference 3.8-71) ~~is used to design the interior regions of the walls~~are used to design the SC walls for the design loading conditions. The procedures of Technical Report MUAP-11020 (Reference 3.8-72) ~~is~~are used to design ~~the~~ connections involving SC walls, such as SC wall-to-wall connections, reinforced concrete slab-to-SC wall connections, and SC wall basemat anchorage connections. The SC wall anchorage connection to the basemat is evaluated in accordance with the applicable requirements of both ACI 349-06 and ASME Section III, Division 2, since the connection crosses a code jurisdictional boundary as shown in Figure 3.8.3-7 sheet 5. The application of both codes is required because the steel baseplate and rebar anchors in this connection serve both as part of the force transfer mechanism between the SC faceplates and the reinforced concrete basemat, and as part of the containment pressure boundary liner and liner anchorage. The applicable code requirements are detailed in Technical Report MUAP-11020 Section 7.1. It is further noted that the applicable ACI or ASME load combinations are used to evaluate the corresponding requirements from each code. The application of these loading combinations to the basemat anchorage calculation is detailed in the CIS basic design calculations.~~The baseplate connecting the SC walls to the basemat is part of the liner and is therefore evaluated in accordance with the ASME Section III Division 2 code.~~

3.8.3.4.5.1 Design for Axial Loads and Bending

~~Design for axial load (tension and compression), in-plane bending, and out-of-plane bending is in accordance with the requirements of ACI 349, Chapters 10 and 14 (Reference 3.8-8).~~Design for axial loads (tension and compression) ~~in-plane bending,~~ and out-of-plane bending is in accordance with the methodology of ACI 349-06 (Reference 3.8-8) Chapters 10 and 14, as supplemented by Sections 3, 4, and 5 of Technical Report MUAP-11019 (Reference 3.8-71). The design of the SC module faceplate reinforcement for combined axial loading, out-of-plane bending, and in-plane shear is performed as described in Technical Report MUAP-11019, Chapter 8.0, (Reference 3.8-71). DCD_03.07.02-35 MIC-03-03-00066 MIC-03-03-00057

~~ThisThe design approach recognizes behavior of the SC module is similar to that of reinforced concrete. The steel plate is similar to standard tensile reinforcement in each of 2twodesigning orthogonal directions, as concluded by the test results of References 3.8-21 through 3.8-27references listed in Subsection 3.8.3.4.~~The design approach is based on SC module experimental research, in which the behavior of SC walls subjected to axial compression and out-of-plane flexural loading is similar to that of reinforced concrete walls subjected to these loads, provided that SC-specific limit states such as faceplate local buckling and interfacial shear failure are prevented. The observations and results of experimental research on SC wall out-of-plane flexure and axial compression behavior are summarized in Technical Report MUAP-11005, MIC-03-03-00066 MIC-03-03-00057

Appendices B and D, respectively (Reference 3.8-63). The manner in which the SC walls are detailed to prevent SC-specific limit states is presented in Technical Report MUAP-11019, Chapter 2 (Reference 3.8-71). MIC-03-03-00057

3.8.3.4.5.2 Design for In-Plane Shear

~~Design for in-plane shear is in accordance with the requirements of ACI 349, Chapters 11 and 14 (Reference 3.8-8). The steel faceplates are treated as reinforcement for the concrete, and satisfy the requirements of Section 11.10 of ACI 349 (Reference 3.8-8).~~Design for in-plane shear is in accordance with the methodology of ACI 349-06 (Reference 3.8-8) Chapters 11 and 21, as supplemented by Section 7 of Technical Report MUAP-11019 (Reference 3.8-71). The steel faceplates are treated as reinforcement for the concrete which satisfy the provisions of Section ~~11.10~~21.7 of ACI 349-06 (Reference 3.8-8). DCD_03.07.02-35 MIC-03-03-00066 MIC-03-03-00057

~~ThisThe design approach is based on behavior of the SC module that is similar to reinforced concrete, which is supported by the test results of References listed in Subsection 3.8.3.4.~~The design approach is based on SC module experimental research in which the in-plane shear behavior of the infill concrete and longitudinal (faceplate) reinforcement was observed to be similar to that of reinforced concrete shear walls. The observations and results of experimental research on SC wall in-plane shear behavior are summarized in Technical Report MUAP-11005, Appendix C (Reference 3.8-63). The steel plate acts as shear reinforcement in each of ~~2~~two ~~designing~~ orthogonal directions, similar to ~~that of standard concrete reinforcement~~the grids of longitudinal reinforcement provided in standard reinforced concrete shear walls. However, as discussed in Technical Report MUAP-11019, Section 7 (Reference 3.8-71), the ACI 349-06 (Reference 3.8-8) code design strength for in-plane shear is conservatively modified by neglecting the concrete contribution to in-plane shear strength. MIC-03-03-00066 MIC-03-03-00057 MIC-03-03-00066 MIC-03-03-00057

3.8.3.4.5.3 Design for Out-of-Plane Shear

~~Design for out-of-plane shear is in accordance with the requirements of ACI 349, Chapter 11 (Reference 3.8-8).~~Design for out-of-plane shear is in accordance with the methodology of ACI 349-06 (Reference 3.8-8) Chapter 11, as supplemented by Section 6 of Technical Report MUAP-11019 (Reference 3.8-71). DCD_03.07.02-35 MIC-03-03-00066

~~The design approach is based on the premise that the behavior against out-of-plane shear and the effect of shear reinforcement of the SC module are similar to those of reinforced concrete. This methodology is supported by the test results of References listed in Subsection 3.8.3.4.~~The design approach is based on SC module experimental research in which the out-of-plane shear behavior of the infill concrete and transverse (tie bar) reinforcement was observed to be similar to that of reinforced concrete members. The observations and results of experimental research on SC wall out-of-plane shear behavior are summarized in Technical Report MUAP-11005, Appendix B (Reference 3.8-63). As discussed in Section 6 of Technical Report MUAP-11019, (Reference 3.8-71) the concrete contribution to out-of-plane shear strength is reduced to account for size effects. In addition, the concrete contribution to out-of-plane shear strength is ignored for load cases involving seismic loading. MIC-03-03-00057

3.8.3.4.5.4 Evaluation for Thermal Loads

~~The acceptance criterion for the load combination with normal thermal loads, which includes the thermal transients described in Subsection 3.8.3.4, is that the overall stress in general areas of the steel plate be less than yield. In local areas where the stress may exceed yield, the total stress intensity range is less than twice yield. This evaluation of thermal loads is based on the ASME Code philosophy for Level A service loads given in ASME Code, Section III (Reference 3.8-2), Subsection NE, Paragraphs NE-3213.13 and NE-3221.4.~~The forces and moments induced in the SC walls due to restraint of thermal growth are included in the design load combinations in accordance with ACI 349-06 (Reference 3.8-8). As discussed in Section 9 of Technical Report MUAP-11019 (Reference 3.8-71), empirical data derived from experiments demonstrates that design basis accident thermal conditions cause no significant reduction in SC wall design strength. Thus, SC walls are evaluated and designed to resist combined design basis accident mechanical and therma~~n~~l loads consistent with provisions of ACI 349-06 (Reference 3.8-8), as supplemented by Technical Report MUAP-11019 (Reference 3.8-71).

MIC-03-03-00066
MIC-03-03-00057
MIC-03-03-00057

3.8.3.4.5.5 Design of Tie Bars

~~The tie bars provide a structural framework for the SC modules with faceplates, maintain the separation between the faceplates, support the SC modules during transportation and erection, and~~During SC module transportation and erection, the tie bars welded between the steel faceplates maintain the module configuration and separation between the faceplates, and act as "form ties" between the faceplates when concrete is being placed. The tie bars are fabricated from steel plates as shown in Technical Report MUAP-11019, Section 2.8 (Reference 3.8-71) and assembled in the manner discussed in Technical Report MUAP-12006 Section 3.0 (Reference 3.8-79). Welding between the tie bars and the faceplates is in accordance with American Welding Society (AWS D1.1) requirements. ~~After the concrete has cured, the tie barsAdditionally, they are not required to contribute to the strength or stiffness of the completed SC modules. However, they do provide additional shear capacity between the steel plates and concrete as well as additional strength similar to that provided by stirrups in reinforced concrete.~~After the concrete has cured, the tie bars provide out-of-plane shear reinforcement similar to the transverse stirrups or ties provided in reinforced concrete members. The tie bars are ~~designed as "form ties" according to the requirements of AISC N690 (Reference 3.8-9) and designed as out-of-plane shear reinforcement according to the requirements of ACI 349 (Reference 3.8-8)~~designed as out-of-plane shear reinforcement according to the requirements of ACI 349-06, Section 11.5 (Reference 3.8-8), as supplemented by Sections ~~3~~2.6 and ~~3.7~~6.0 of Technical Report MUAP-11019 (Reference 3.8-71). ~~Tie bars are connected to steel faceplates in accordance with American Welding Society (AWS D1.1) requirements. Tie bar segments welded to each faceplate are spliced together using mechanical reinforcing bar couplers that meet requirements of ACI 349-06 Sections 12.14.3 and 21.2.6.~~The tie bar spacing is selected to meet the shear reinforcement spacing limits of ACI 349-06, Section 11.5.5 (Reference 3.8-8). The tie bar size is selected to ensure the development of ductile flexural yielding in the SC wall connection regions prior to concrete shear failure under out-of-plane loading, as discussed in Technical Report MUAP-11020, Sections 3.1 and 3.2, (Reference 3.8-72). The tie bar size and spacing selected for the connection regions is then used conservatively

MIC-03-03-00066
MIC-03-03-00057
DCD_03.07.02-35
MIC-03-03-00066
MIC-03-03-00057

throughout the expanse of the SC walls for fabrication simplicity. Finally, the selected tie bar size and spacing is confirmed to maintain structural integrity of the SC walls by preventing section delamination or splitting failure, as discussed in Technical Report MUAP-11019, Section 2.7 (Reference 3.8-71). MIC-03-03-00057

3.8.3.4.5.6 Design of Shear Studs

The SC modules are designed as reinforced concrete elements, with the faceplates serving as reinforcing steel. Since the faceplates do not have deformation patterns typical of reinforcing steel, shear studs are provided to transfer the forces between the concrete and the steel faceplates. The shear studs are designed according to Appendix D of ACI 349-06 (Reference 3.8-8), as supplemented by Sections 2.1~~, 2.2, and 2.3~~ through 2.5 of Technical Report MUAP-11019 (Reference 3.8-71). ~~The shear studs make the concrete and steel faceplates interact compositely. In addition, the shear studs permit anchorage for piping and other items attached to the walls.~~As discussed in Technical Report MUAP-11019, Section 2.2 (Reference 3.8-71), the shear stud spacing is selected to prevent faceplate local buckling under applied compression, based on the behavior observed in experimental research. This research is summarized in Technical Report MUAP-11005, Appendix C (Reference 3.8-63). As discussed in Technical Report MUAP-11019, Section 2.3, the design shear strength of the studs is determined in accordance with ACI 349-06 Appendix D Section D.4.5 (Reference 3.8-8). Using these provisions, the shear studs are sized to prevent interfacial shear failure of the cross section under out-of-plane loading, as discussed in Technical Report MUAP-11019, Section 2.5. Finally, as discussed in Technical Report MUAP-11019, Section 2.4, the shear studs are confirmed to provide faceplate development lengths comparable to those of standard reinforcing bars typically used in reinforced concrete nuclear structures. MIC-03-03-00066 MIC-03-03-00057

3.8.3.4.6 Floor Slabs

The ~~floor slab of~~ reinforced concrete floor slabs ~~is~~are analyzed and designed according to ACI 349-06 (Reference 3.8-8) considering the same ~~loads~~design loading conditions as for the SC modules. The floor design does not rely on composite action with supporting structural steel beams. MIC-03-03-00066

3.8.3.4.7 Structural Steel Design and Analysis

Structural steel framing within the interior of the PCCV is primarily for support of floor slabs, equipment, distribution systems, and access platforms. Design and analysis procedures, including assumptions on boundary conditions and expected behavior under loads, are in accordance with the allowable stress design (ASD) method in AISC-N690 (Reference 3.8-9). Analysis methods are generally simple calculations using seismic ~~accelerations~~loads obtained from Section 3.7 methodologies in load combinations. Frame connections are detailed for simply-supported beams unless otherwise analyzed and detailed. MIC-03-03-00066

3.8.3.4.8 RCL Supports

The RCL piping and support system is analyzed for the dynamic effects of a SSE. A coupled model of the containment internal~~s~~ structure and the RCS is dynamically MIC-03-03-00066

evaluated using a time-history integration method of analysis. Appendix 3C provides additional information regarding the qualification of RCL supports.

3.8.3.5 Structural Acceptance Criteria

Structural acceptance criteria is reflected in Table 3.8.4-3 for concrete structures and Table 3.8.4-4 for steel structures, and are in accordance with ~~ACI 349~~ACI 349-06 (Reference 3.8-8) and AISC-N690 (Reference 3.8-9), except as provided in the table notes. MIC-03-03-00066

3.8.3.5.1 Design Report

A Design Report of the containment internal structure is provided separately from the DCD. The Design Report has sufficient detail to show that the applicable stress limitations are satisfied when components are subjected to the design loading conditions.

Deviations from the design due to as-procured or as-built conditions are acceptable based on an evaluation consistent with the methods and procedures of Section 3.7 and 3.8 provided the following acceptance criteria are met.

- The structural design meets the acceptance criteria specified in Section 3.8.
- The ISRS meet the acceptance criteria specified in Subsection 3.7.2.5.

Depending on the extent of the deviations, the evaluation may range from documentation of an engineering judgment to performance of a revised analysis and design. The results of the evaluation are documented in an as-built summary report.

3.8.3.5.2 Design Summary of ~~Critical Sections~~Representative Elements MIC-03-03-00057

This subsection summarizes the design of the following ~~critical sections~~representative elements:

- Wall 1 - North-east wall of refueling cavity (4 ft, 8 in. thick)
- Wall 2 - North-west wall of secondary shield (4 ft, 0 in. thick)
- Wall 3 - North-east wall of RWSP (3 ft, 3 in. thick)
- Connection 1 - SC Wall Basemat Anchorage MIC-03-03-00057
- Connection 2 - SC Wall to SC Wall T Connection
- Connection 3 - Reinforced Concrete Slab to SC Wall Connection

~~Critical portions of the SC modules occur at the largest stresses in each wall as defined in Table 3.8.3-5 and Figure 3.8.3-11.~~Representative elements are selected to illustrate SC wall and connection designs for the CIS. The details and locations of the six representative elements are defined in Table 3.8.3-5. Locations are shown in Figure 3.8.3-7 Sheet 2 for connections and Figure 3.8.3-11 for walls. The structural

configuration and typical details are shown in Figures 3.8.3-5, 3.8.3-6, 3.8.3-7, and 3.8.3-10. The structural analyses described in Subsection 3.8.3.4 are summarized in Table 3.8.3-~~6~~4. The design procedures are described in Subsection 3.8.3.4. MIC-03-03-00057

3.8.3.6 Materials, Quality Control, and Special Construction Techniques

Subsection 3.8.4.6 contains information pertaining to the materials, quality control programs, and any special construction techniques utilized in the construction of seismic category I structures for the US-APWR.

3.8.3.6.1 Special Construction Techniques

Special module construction techniques, in addition to the methodology described in Subsection 3.8.3.1, is provided as necessary in ~~a later supplement to the DCD~~Technical Report MUAP-12006, "Steel Concrete (SC) Wall Fabrication, Construction and Inspection" (Reference 3.8-79). The COL Applicant is to provide detailed construction and inspection plans and documents in accordance with MUAP-12006. MIC-03-03-00057

3.8.3.7 Testing and Inservice Inspection Requirements

Monitoring of seismic category I structures is performed in accordance with the requirements of NUMARC 93-01 (Reference 3.8-28) and 10 CFR 50.65 (Reference 3.8-29) as detailed in RG 1.160 (Reference 3.8-30), specifically Section 1.5 of RG 1.160. Subsection 3.8.4.7 describes the applicable testing and ISI requirements.

3.8.3.7.1 Construction Inspection

Inspection relating to the construction of seismic category I SSCs is in accordance with the codes applicable to the construction activities and/or materials. In addition, weld acceptance is performed in accordance with the National Construction Issues Group (NCIG), Visual Weld Acceptance Criteria for Structural Welding at Nuclear Power Plants, NCIG-01 (Reference 3.8-31).

3.8.4 Other Seismic Category I Structures

Other ~~S~~seismic category I structures include those standard plant buildings which house safety-related systems and components, except the PCCV (Subsection 3.8.1) and ~~compartmentalization internal to the PCCV~~CIS (Subsection 3.8.3). Distribution subsystems are also included in this discussion, such as safety-related HVAC ducts, conduits, cable trays, and their respective seismic category I supports. MIC-03-03-00057 MIC-03-03-00057

US-APWR standard plant seismic category I structures and subsystems are designed for a SSE which is equivalent to the CSDRS defined in Subsection 3.7.1.1. Major US-APWR standard plant seismic category I structures with seismic designs based on the CSDRS are identified as:

- R/B
- East and west PS/Bs
- ESWPC MIC-03-03-00057

Discussion of design methodology, applicable loads, load combinations and acceptance criteria within this subsection is applicable for the R/B structures, ~~and~~ the east and west PS/Bs, and the ESWPC, which are part of the US-APWR standard plant. MIC-03-03-00057

The COL Applicant is responsible for the seismic design of those seismic category I and seismic category II SSCs not seismically designed as part of the US-APWR standard plant, including the following seismic category I structures:

- ESWPT
- UHSRS
- PSFSVs

Note that the system descriptions of PSFSVs and ESWPT are within the scope of the US-APWR standard plant design.

Non-standard seismic category I SSCs are site-specific, and are designed for the site specific or more conservative SSE based on the ground motion response spectra~~, the site-specific foundation input response spectra, and the minimum response spectrum as described in Subsection 3.7.1.1~~. MIC-03-03-00057

3.8.4.1 Description of the Structures

~~Seismic category I buildings, except the R/B, PCCV, and containment internal structure, are free standing on separate concrete basemats and are primarily reinforced concrete structures. The R/B, PCCV, and containment internal structure share a common basemat; however, they are otherwise independent of each other. Adjoining building basemats are structurally separated by a 4 in. gap at and below the grade. This requirement does not apply to engineered mat fill concrete that is designed to be part of the basemat subgrade for the interface between the R/B, and east and west PS/Bs. To be consistent with seismic modeling requirements of Section 3.7, no 4 in. gap is permitted in the fill concrete between these buildings.~~ MIC-03-03-00057 The US-APWR R/B complex consists of the R/B, PCCV, CIS, A/B, east PS/B, west PS/B, and ESWPC supported on a common reinforced concrete basemat. The R/B, east PS/B, west PS/B, and A/B are combined structures that share structural shear walls. The PCCV and CIS are independent structures that share the common basemat with the other structures. The ESWPC located at the south side of the R/B complex shares, as a common wall, a portion of the southern wall of the R/B, east PS/B and west PS/B below grade. The R/B complex superstructure is separated from the T/B by approximately 16 in. at the closest interface point. The R/B complex basemat, discussed in Subsection 3.8.5, is horizontally separated from the T/B basemat by approximately 20 ft. 6 in. The AC/B and tank house are located adjacent to the A/B, with a 16 in. gap in between.

~~The minimum gaps between building superstructures is two times the absolute sum of the maximum displacement of each building under the most unfavorable load combination, or a minimum of 4 in.~~

3.8.4.1.1 R/B

The R/B has five main floors. In plan, the R/B surrounds the PCCV and containment internal structure, and is founded with those structures on a common basemat. The outer perimeter of the R/B is basically rectangular, and is constructed of reinforced concrete walls, floors, and roofs. In cross-section, the height of the R/B varies from elevation 101 ft, 0 in. to 157~~4~~ ft, 6 in., and the PCCV extends above the R/B to elevation 232 ft, 0 in. MIC-03-03-00057

The R/B consists of the following areas, defined by their functions.

- Safety system pumps and heat exchangers area
- Fuel handling area
- Main steam and feed water area
- Safety-related electrical area

The PCCV is discussed in detail in Subsection 3.8.1. The PCCV includes the containment internal structure comprising the primary shield wall and interior compartmentalization which are discussed in Subsection 3.8.3. Outside the PCCV and part of the R/B is the annulus. The annulus, which consists of concrete walled areas around the PCCV, serves a secondary containment function, and is made up of all areas with containment penetrations. It is maintained at a slightly negative pressure to control release of any radioactive materials to the environment.

The safety system pumps and heat exchanger areas are located at the lowest level of the R/B to secure the required net positive suction head. The safety system heat exchangers are located on the upper floor.

The fuel handling area is located on the plant northern side of the R/B at the same level as the ~~CV~~containment vessel operating floor, and houses the following equipment and facilities: MIC-03-03-00057

Design and analysis of the spent fuel pit, the spent fuel racks, and the fuel handling system is in accordance with Appendix D of NUREG-0800, SRP 3.8.4 (Reference 3.8-40). Additional general information is provided by ANSI/ANS-57.7 (Reference 3.8-33). Subsection 9.1.2 describes the design basis and layout of the spent fuel pit, the spent fuel racks, and the fuel handling system. MIC-03-03-00057

- ~~Spent fuel pit crane~~Fuel handling machine DCD_09.01.04-19 S01
- ~~Fuel transfer system~~ MIC-03-03-00057
- Cask ~~loading~~ pit with the ~~fuel handling area crane~~spent fuel cask handling crane DCD_09.01.04-19 S01
- New fuel pit
- ~~Decontamination pit~~Cask washdown pit DCD_09.01.04-19 S01

- Spent fuel pit and storage racks

The main steam and feed water area is located on the plant southern side of the R/B, between the PCCV and the turbine building (T/B). The piping rooms are located on the top floor of this area where they pass between the PCCV and T/B.

The safety-related electrical area has two floors located on the plant southern side of the R/B and under the main steam and feed water area. This is a non-radioactive zone and is completely separated from the radioactive zones of the R/B. This area houses the following safety-related facilities.

- main control room (MCR)
- Switchgear and batteries
- Instrumentation and control cabinet room

Four redundant safety systems containing radioactive material are located in each zone of the four quadrants surrounding the containment structure. Each of the quadrant areas is separated by ~~a~~ physical barriers to assure that the functions of the safety-related systems are maintained in the event of postulated incidents such as fires, floods, and high energy pipe break events. MIC-03-03-00057

Non-radioactive safety systems such as the ESWS, CCWS and electrical system, etc., are located in the plant southern area of the R/B. This area is also separated into four divisions by a physical barrier to assure that the functions of the safety-related systems are maintained in the event of postulated incidents such as fires, floods, and high energy line break events.

3.8.4.1.2 PS/Bs

The east and west PS/Bs are arranged adjacent to the R/B; one to the east and one to the west. These buildings ~~are free-standing on a reinforced concrete basemat~~share a common basemat with the other structures of the R/B complex. MIC-03-03-00057

Each building contains two emergency power sources and one alternate power source which are separated from each other by a physical barrier. In addition, the safety-related chillers are also located in these buildings.

Details of the design and analysis of the east and west PS/Bs are provided in Subsection 3.8.4.4.

3.8.4.1.3 ESWPT, UHSRS, PSFSVs, and Other Site-Specific Structures

The ESWPT is a seismic category I structure constructed of reinforced concrete. Terminating in part under the T/B, the structure is isolated from other structures to prevent any seismic interaction. The other termination point is the UHSRS at the source of the ESWS. ~~[~~[The UHSRS consist of a cooling tower enclosure, ESWS pump houses, and the UHS basin.]~~]~~ The PSFSVs are structures which house the safety-related and non-safety related fuel oil tanks. MIC-03-03-00057

The design and analysis of the ESWPT, UHSRS, PSFSVs, and other site-specific structures are to be provided by the COL Applicant based on site-specific ~~seismic criteria~~conditions. MIC-03-03-00057

3.8.4.1.4 Heating, Ventilating and Air Conditioning Ducts and Duct Supports

Seismic category I HVAC ducts and duct supports are routed as necessary to supply safety-related functions of air distribution. Appendix 3A describes the qualification of HVAC ducts and duct supports.

3.8.4.1.5 Conduits and Conduit Supports

Seismic category I conduits and conduit supports are routed as necessary to ~~supply~~support safety-related Class-1E cable. The conduit consists of a metal wall of minimum thickness as ~~specific~~specified, and is assembled using standard industry fittings and clips. Appendix 3F describes the qualification of conduits and conduit supports. MIC-03-03-00057

3.8.4.1.6 Cable Trays and Cable Tray Supports

Seismic category I cable trays and cable tray supports are routed as necessary to ~~supply~~support safety-related Class-1E cable. Cable trays are manufactured using thin-gauge steel channels, and supports are constructed using cold formed or rolled steel shapes. Appendix 3G describes the qualification of cable trays and cable tray supports. MIC-03-03-00057

3.8.4.1.7 ESWPC MIC-03-03-00057

The ESWPC is arranged adjacent to the R/B and shares, as a common wall, a portion of the subgrade south wall of the R/B, east and west PS/Bs, and shares a common basemat. The ESWPC contains portions of the piping from the essential service water system, which provides service water for the component cooling water heat exchangers and essential chiller units.

3.8.4.2 Applicable Codes, Standards, and Specifications

The following industry standards are applicable for the design and construction of seismic category I structures and subsystems. Other codes, standards and specifications applicable to materials, testing and inspections are provided in Subsections 3.8.4.6 and 3.8.4.7.

- ~~ACI 349-01, Code Requirements for Nuclear Safety Related Concrete Structures, American Concrete Institute, 2001~~Code Requirements for Nuclear Safety-Related Concrete Structures (ACI 349-06) and Commentary, American Concrete Institute, 2006 (Reference 3.8-8). MIC-03-03-00066
- ACI 350.3-01, Seismic Design of Liquid-Containing Concrete Structures and Commentary, American Concrete Institute, 2001 (Reference 3.8–73). MIC-03-03-00057
- ANSI/AISC N690-1994, Specification for the Design, Fabrication and Erection of Steel Safety-Related Structures for Nuclear Facilities, including Supplement 2

(2004), American National Standards Institute/American Institute of Steel Construction, 1994 & 2004 (Reference 3.8-9).

- ANSI/ANS-57.7 Design Criteria for an Independent Spent Fuel Storage Installation (Water Pool Type), American National Standards Institute/American Nuclear Society, 1997 (Reference 3.8-33).
- ASCE 7-05, Minimum Design Loads for Buildings and Other Structures, including Supplement No. 1, American Society of Civil Engineers, 2005 (Reference 3.8-35). MIC-03-03-00057
- ASCE 37-02, Design Loads on Structures During Construction, American Society of Civil Engineers, 2002 (Reference 3.8-36).
- ASME BPVC-III, Rules for Construction of Nuclear Facility Components - Section III Division 1 - Subsection NF - Supports, American Society of Mechanical Engineers, 2001 Edition through the 2003 Addenda (Reference 3.8-2).
- Rules for Construction of Nuclear Facility Components, Division 2, Concrete Containments, Section III, American Society of Mechanical Engineers, 2001 Edition through the 2003 Addenda (Reference 3.8-2). MIC-03-03-00057
- ASME NQA-2-1983, Quality Assurance Requirements for Nuclear Power Plants, with ASME NQA-2a-1985, Addenda to ASME NQA-2-1983, American Society of Mechanical Engineers (Reference 3.8-37).
- Specification for the Design of Cold-Formed Steel Members. 1996 Edition and Supplement No 1, American Iron and Steel Institute, July 30, 1999 (Reference 3.8-38).
- NUREG 800 SRP 3.8.4, Other Seismic Category 1 Structures, U.S. Nuclear Regulatory Commission, March 2007 (Reference 3.8–40). MIC-03-03-00057
- DC/COL-ISG-7, Interim Staff Guidance on Assessment of Normal and Extreme Winter Precipitation Loads on the Roofs of Seismic Category I Structures, U.S. Nuclear Regulatory Commission (Reference 3.8–74).
- ACI-304R, Guide for Measuring, Mixing, Transporting, and Placing Concrete, American Concrete Institute, 2000 (Reference 3.8-39).
- ACI-224R, Control of Cracking in Concrete Structures, American Concrete Institute, 2001 (Reference 3.8-54).
- RG 1.61, Damping Values for Seismic Design of Nuclear Power Plants, U.S. Nuclear Regulatory Commission, March 2007 (Reference 3.8–64). MIC-03-03-00057
- RG 1.69, Concrete Radiation Shields for Nuclear Power Plants, U.S. Nuclear Regulatory Commission, December 1973 (Reference 3.8-20).

- RG 1.91, Evaluations of Explosions Postulated to Occur on Transportation Routes Near Nuclear Power Plants, U.S. Nuclear Regulatory Commission, February 1978 (Reference 3.8-49).
- RG 1.92, Combining Modal Responses and Spatial Components in Seismic Response Analysis, U.S. Nuclear Regulatory Commission, July 2006 (Reference 3.8-75). MIC-03-03-00057
- RG 1.115, Protection Against Low-Trajectory Turbine Missiles, U.S. Nuclear Regulatory Commission, July 1977 (Reference 3.8-50).
- RG 1.127, Inspection of Water-Control Structures Associated with Nuclear Power Plants, U.S. Nuclear Regulatory Commission, March 1978 (Reference 3.8-47).
- RG 1.142, Safety-Related Concrete Structures for Nuclear Power Plants (Other than Reactor Vessels and Containments), U.S. Nuclear Regulatory Commission, November 2001 (Reference 3.8-19).
- RG 1.143, Design Guidance for Radioactive Waste Management Systems, Structures, and Components Installed in Light-Water-Cooled Nuclear Power Plants, U.S. Nuclear Regulatory Commission, November 2001 (Reference 3.8-51).
- RG 1.160, Monitoring the Effectiveness of Maintenance at Nuclear Power Plants, U.S. Nuclear Regulatory Commission, March 1997 (Reference 3.8-30).
- RG 1.199, Anchoring Components and Structural Supports in Concrete, U.S. Nuclear Regulatory Commission, November 2003 (Reference 3.8-41).

Appendix 3A, Section 3A.2, lists the applicable codes, standards and specifications for HVAC ducts and duct supports. Appendix 3F, Section 3F.2, lists the applicable codes, standards and specifications for conduit and conduit supports. Appendix 3G, Section 3G.2, lists the applicable codes, standards and specifications for cable trays and cable tray supports.

3.8.4.3 Loads and Load Combinations

Loads considered in the design are listed below. Not all loads listed are necessarily applicable to all structures and their elements. The loads for which each structure is designed are dependent on the applicable conditions.

The COL Applicant is to identify any applicable externally generated loads. Such site-specific loads include those induced by floods, potential non-terrorism related aircraft crashes, explosive hazards in proximity to the site, and projectiles and missiles generated from activities of nearby military installations. Loads that are due to malevolent vehicle assault, aircraft impact, and accidental explosion are taken as W_t in load combination 5 in accordance with RG 1.142 (Reference 3.8-19), Regulatory Position 7. Externally generated loads are not normally postulated to occur simultaneously with abnormal plant

loads; however, the applicable loads and the related load combinations are determined on a case-by-case basis.

3.8.4.3.1 Dead Loads (D)

Dead loads are taken as the weight of all permanent construction/installations including fixed equipment and tanks. Uniform and/or concentrated dead loads are generally utilized for design of individual members. Equivalent dead loads are used during global analyses as conservative uniform load allowances of minor equipment and distribution systems, including small bore piping.

3.8.4.3.1.1 Dead Loads (Uniform and/or Concentrated)

Dead loads include the weight of structures such as slabs, roofs, decking, framing (beams, columns, bracing, and walls), and the weight of permanently attached major equipment, tanks, machinery, cranes, elevators, etc. The deadweight of equipment is based on its bounding operating condition including the weight of fluids. In addition, permanently attached non-structural elements such as siding, partitions, and insulation are included. Dead loads of cranes and elevators do not include the rated capacity lift or impact.

3.8.4.3.1.2 Equivalent Dead Load (Uniform)

Equivalent dead load includes the weight of minor equipment not specifically included in the dead load defined in Subsection 3.8.4.3 and the weight of piping, cables and cable trays, ducts, and their supports. It also includes fluid contained within the piping and minor equipment under operating conditions. Floors are checked for the actual equipment loads. To account for permanently attached small equipment, piping, ductwork and cable trays, a minimum equivalent dead load of 50 lb/ft^2 is applied. Where piping, ductwork, or cable trays are supported from platforms or walkway beams, actual loads may be determined and used in lieu of a conservative loading.

For floors with a significant number of small pieces of equipment (e.g., electrical cabinet rooms), the equivalent dead load is determined by dividing the total equipment weight by the floor area that effectively supports the equipment within the room, plus an additional 50 lb/ft^2.

3.8.4.3.2 Liquid Loads (F)

The vertical and lateral pressures of liquids are treated as dead loads except for external pressures due to ground water which are treated as live loads. The effects of buoyancy and flooding on SSCs are considered, where applicable. Structures supporting fluid loads during normal operation and accident conditions are designed for the hydrostatic as well as hydrodynamic loads. Impulsive and convective hydrodynamic loads due to seismic events are determined as discussed in Subsection 3.7.3.9, and included in the earthquake load as described in Subsection 3.8.4.3.~~6.~~ For the purposes of evaluating flotation in Subsection 3.8.5.~~3~~5, F_b is the buoyant force of the design-basis flood or high ground water table, whichever is greater. MIC-03-03-00057

3.8.4.3.3 Earth Pressure (H)

A static earth pressure acting on the structures during normal operation, considered as fully saturated to account for ground and flood water levels, is included in the analysis as *H*. The dynamic soil pressure, induced during an SSE event, is considered as an earthquake load E_{SS}. The analysis methods for static, dynamic, and passive earth pressure, including treatment of groundwater, are presented in Subsection 3.8.4.4. MIC-03-03-00057

3.8.4.3.4 Live Loads (L)

Live load is the load imposed by the use and occupancy of the building/structure. Live loads include floor area loads, laydown loads, fuel transfer casks, equipment handling loads, trucks, railroad vehicles, and similar items. The floor area live load need not be applied on areas occupied by equipment whose weight is specifically included in the dead load. Live load is applicable on floors under equipment where access is provided; for instance, the floor under an elevated tank supported on legs.

The following live load items are considered in design.

3.8.4.3.4.1 Building Floor Loads

Floor live loads account for heavily loaded areas for component laydown, such as the fuel cask loading dock and the containment refueling floor. The design live loads reflect the temporary location of major pieces of equipment, their safe load path during movement/ relocation, and their foot-print loads or equivalent uniformly distributed loads.

In addition, the following minimum values for live loads are used in load combinations involving non-seismic loads. Live loads for the seismic analysis are defined in Subsection 3.8.4.3.

Containment operating deck	950 lb/ft^2 (during maintenance and refueling outages)
	200 lb/ft^2 (during normal operation)
Offices	50 lb/ft^2
Assembly and locker rooms	100 lb/ft^2
Laboratories and laundry Rooms	100 lb/ft^2
Stairs and walkways	100 lb/ft^2 (or a moving concentrated load of 1,000 pounds)
Structural platforms & gratings	100 lb/ft^2
	(However, grating areas of concrete floors are designed for the same live load as the adjacent concrete floor)
Maintenance and service platforms	Load is calculated for individual locations based on the functional requirements and service equipment

All other floors (ground floor and elevated floors)	200 lb/ft^2
Rail road support structures:	Based on AREMA Manual
Truck support structures:	HS-20 loading per AASHTO standards

MIC-03-03-00057

MIC-03-03-00057

In design reconciliation analysis if actual loads are established to be lower than the above loads, the actual loads may be used for reconciliation. Floor live loads for design are not reduced below 100 lb/ft^2, except for offices which are maintained as 50 lb/ft^2 minimum.

3.8.4.3.4.2 Roof Snow Loads and Roof Live Loads

The roof is designed for uniform snow live load as specified in Chapter 2. Normal winter precipitation roof loads are added to all other live loads that may be expected to be present at the time to determine the design live load on the roof, and include appropriate load factors in applicable loading combinations. The extreme winter precipitation roof load is included as live load in extreme loading combinations using the applicable load factor. Other extreme environmental loads, e.g., seismic, ~~and~~ tornado, and hurricane loads are not considered as occurring simultaneously. Slope roof snow loads, partially loaded, unbalanced roof snow loads, and drifts (including sliding snow) on lower roofs, as applicable, are determined in accordance with ASCE 7-05 (Reference 3.8-35).

DCD_02-03 S01

The roof is designed for minimum 50 psf normal winter precipitation roof load and extreme winter precipitation load of 75 psf snow load for Seismic Category I structures for standard design. Consistent with DC/COL-ISG-7, this load represents the 100-year snowpack maximum snow weight, including the contributing portion of either extreme frozen winter precipitation event or extreme liquid winter precipitation event. The roof design accommodates a minimum roof live load of 40 psf to account for loads produced by workers, equipment, and materials. Roof live load is not added to roof snow load when evaluating the design load combinations.

MIC-03-03-00057

3.8.4.3.4.3 Roof Rain Loads

Roof rain load is accounted for in accordance with Chapter 8 of ASCE 7-05 (Reference 3.8-35), and applied as applicable in load combinations. Roof rain load is included in live load in applicable load combinations, including additive effects with roof snow load as identified in Section 7.10 of ASCE 7-05. Subsection 3.4.1.2 provides additional discussion of design features to limit ponding of rain on the roofs of plant buildings.

3.8.4.3.4.4 Concentrated Loads for the Design of Local Members

Concentrated load on beams and girders (in load combinations that do not include seismic load)	5,000 lbs to be applied as to maximize moment or shear. This load is not carried to columns. It is not applied in office or access control areas (1)
Concentrated load on slabs (to be considered with dead load only)	5,000 lbs to be so applied as to maximize moment or shear. This load is not cumulative and is not carried to columns. It is not applied in office or access control areas (1)

(1) Area where no heavy equipment is located or transported.

In the design reconciliation analysis, if actual loads are established to be lower than the above loads, the actual loads may be used for reconciliation.

3.8.4.3.4.5 Temporary Exterior Wall Surcharge

~~When applicable, the most critical of either a minimum subsurface wall surcharge of 250 lb/ft^2 (wheel load converted to equivalent uniform vertical load) or a railroad surcharge is applied.~~The most critical of either a minimum surcharge of 450 psf (attributed to wheel loading converted to equivalent uniform load) or a railroad surcharge is applied. The surcharge is applied at plant grade adjacent to below-grade walls when such loading may be present. MIC-03-03-00057

3.8.4.3.4.6 Construction Loads

In the load combination for the construction case, the live load is defined as the additional construction loads produced by cranes, trucks, or any type of vehicle with its pick-up load, as required by construction. ASCE 37-02 (Reference 3.8-36) provides additional guidance. For steel beams supporting concrete floors, the weight of the concrete plus 100 lb/ft^2 uniform load or 5,000 pounds concentrated load, distributed near points of maximum shear and moment, are applied. A one third increase in allowable stress is permitted in this case.

Metal decking and precast concrete panels used as formwork for concrete floors are designed for the wet weight of the concrete plus a construction live load of 20 lb/ft^2 uniform or 150 pound concentrated. The deflection for these items used as a form is limited to the lesser of 0.75 in. or the span length (in inches) divided by 180. For relatively high construction loads, temporary supports may be used to prop floor beams without increasing their size.

3.8.4.3.4.7 Crane Loads

Crane and equipment supplier's information are used to determine wheel loads, equipment loads, weights of moving parts, and reactions of clamps (if any). Construction loads are considered where applicable.

the ~~value of site-specific OBE is set higher than 1/3 of the site-specific SSE. Therefore, the site-specific seismic design does not have to consider OBE loads if the OBE spectra are enveloped by 1/3 of the site-specific foundation input response spectra and ground motion response spectra~~site specific value for OBE response spectra acceleration is set higher than 1/3 of the site-specific SSE response spectra acceleration. MIC-03-03-00057

3.8.4.3.6.2 Safe Shutdown (E_{ss})

E_{ss} is defined as the loads generated by the SSE specified for the plant, including the associated hydrodynamic loads and dynamic incremental soil pressure (based on three-dimensional SSI analysis results). Earthquake loads (E_{ss}), are derived for evaluation of seismic category I structures using ground motion accelerations in accordance with Section 3.7.

Seismic dynamic analyses of the buildings consider the dead load and the equivalent dead loads as the accelerated mass. In addition to the dead load, 25% of the floor live load during normal operation and 75% of the roof snow load, whichever is applicable, is also considered as accelerated mass in the seismic models.

For the local design of members loaded individually, such as the floors and beams, seismic member forces include the vertical response due to masses equal to 50% of the specified floor live loads instead of 25% of floor live load, as follows:

$$a_V(0.5L)$$

where

a_V = Vertical seismic acceleration obtained from the seismic dynamic analysis results

L = Floor live load per Subsection 3.8.4.3.4

In locations where live loads are expected to always be present, the percentage of live load acting as accelerated mass is increased up to 100% of the live load for the affected members.

For the seismic load combination, the containment operating deck is designed for a live load of 200 lb/ft^2 which is appropriate for plant operating conditions, and 25% of this live load is included as mass in the seismic analyses. The mass of equipment and distributed system are included in both the dead and seismic loads.

3.8.4.3.7 Normal Operating Loads

3.8.4.3.7.1 Operating Thermal Loads (T_o)

The normal operating environment inside and outside the R/B is specified in Table 3.8.~~4~~1-~~1~~3. Temperature Gradients of the PS/Bs are provided in Table 3.8.4-2 and Figure 3.8.4-1. Normal thermal loads for the exterior walls and roofs are caused by positive and negative temperature variations through the concrete wall. ~~The temperature~~ MIC-03-03-00057 MIC-03-03-00057

~~in the concrete is based on one-dimensional steady state heat transfer analysis, which considers the surface heat transfer between the environment and the concrete. All exterior walls of the R/B are designed for these thermal loads, even if the exterior surface is protected by an adjacent building.~~ The thermal gradient is also applied to the portion of the R/B ~~between the PCCV upper annulus and the auxiliary building (A/B)~~at the outer face of the PCCV buttress shaft. MIC-03-03-00057

The COL Applicant is to specify normal operating thermal loads for site-specific structures, as applicable.

3.8.4.3.7.2 Operating Pipe Reactions (R_o)

Pipe and equipment reactions during normal operation or shutdown conditions are based on the most critical transient or steady state condition.

3.8.4.3.8 Effects of Pipe Rupture (Y) and other Accidents (P_a, T_a, R_a)

3.8.4.3.8.1 Accident Pressure Load (P_a)

Accident pressure loads are considered within or across a compartment and/or building due to a differential pressure generated by postulated pipe rupture. Dynamic effects due to pressure time-history are also included in the design.

3.8.4.3.8.2 Accident Thermal Loads (T_a)

Thermal loads due to temperature gradients caused by the postulated pipe breaks are considered in the design. The temperature gradients are calculated using the temperatures, corresponding to LOCA and MSLB, ~~or a spent fuel pit accident,~~ and are presented in Table 3.8.1-3. Local areas are designed for the elevated temperature effects and the loads resulting from the postulated accidents. MIC-03-03-00057

3.8.4.3.8.3 Accident Thermal Pipe Reaction (R_a)

Pipe and equipment reactions under thermal conditions are generated by the postulated pipe break, including (R_o).

3.8.4.3.8.4 Reaction Due to Pipe Ruptures (Y_r)

Pipe breaks within the R/B are postulated in accordance with the requirements of the SRP 3.6.2 and 3.6.3. MIC-03-03-00057

The load on a structure generated by the reaction of a ruptured high-energy pipe during the postulated event is included using an appropriate dynamic load factor. The time dependent nature of the load and the ability of the structure to deform beyond yield are considered in establishing the structural capacity necessary to resist the effects of (Y_r).

3.8.4.3.8.5 Jet Impingement (Y_j)

Load on structure generated by the jet impingement from a ruptured high-energy pipe during the postulated event is included using an appropriate dynamic load factor. The time-dependent nature of the load and the ability of the structure to deform beyond yield are considered in establishing the structural capacity necessary to resist the effects of Y_j. The dynamic load factor is calculated using a long duration step function for the load. The target resistance is idealized as bilinear elasto-perfectly plastic.

The structural evaluation considers a double-ended break and a longitudinal break (equal to the pipe cross-sectional area) for calculating the jet impingement load from the main steam and feedwater lines. This evaluation is applicable to the floor at elevation 65 ft, 0 in. of the Main Steam Isolation Valve (MSIV) subcompartment in the R/B break exclusion zone. The design pressure for LOCA and MSLB is considered for 100% power operation.

3.8.4.3.8.6 Impact of Ruptured Pipe (Y_m)

The load resulting from the impact of a ruptured high-energy pipe on a structure or a pipe restraint during the postulated event includes an appropriate dynamic load factor. The type of impact (i.e., plastic, elastic), together with the ability of the structure to deform beyond yield are considered in establishing the structural capacity necessary to resist the impact.

3.8.4.3.9 Load Combinations

Concrete structures are designed in accordance with ~~ACI 349~~ACI 349-06 (Reference 3.8-8) and the provisions of RG 1.142 (Reference 3.8-19) where applicable, with the load combinations and load factors provided in Table 3.8.4-3. MIC-03-03-00066

Steel structures are designed using the allowable strength design method in accordance with AISC N690 (Reference 3.8-9) for the load combinations and allowable strength factors provided in Table 3.8.4-4.

3.8.4.4 Design and Analysis Procedures

The following discussion describes the design and analysis procedures used for seismic category I structures in accordance with ~~ACI 349~~ACI 349-06 (Reference 3.8-8), with ~~supplement~~supplemental guidance by RG 1.142 (Reference 3.8-19) for concrete structures, and AISC N690 (Reference 3.8-9) for steel structures. This subsection also discusses items such as general assumptions on boundary conditions, expected behavior under loads, methods by which loads and forces are transmitted to supports and ultimately the structure ~~foundation~~basemat, and computer programs used. ~~Table 3.8.4-5 summarizes the modeling and analytical methods of R/B and PS/Bs.~~ MIC-03-03-00066 MIC-03-03-00057

A Design Report prepared in accordance with guidance from Appendix C to SRP 3.8.4 provides design and construction information more specific than contained within this DCD. The Design Report information quantitatively represents the actual design computations and the final design results. In addition, the Design Report provides criteria for reconciliation between design and as-built conditions.

3.8.4.4.1 R/B

The R/B includes the MCR and the fuel storage area, and is a reinforced concrete structure consisting of vertical shear/bearing walls and horizontal slabs. The walls carry the vertical loads from the structure to the basemat. Lateral loads are transferred to the walls by the roof and floor slabs.

The fuel handling area is a reinforced concrete structure supported by structural steel framing. The new fuel is stored in racks in a dry, unlined pit. The spent fuel pit is lined with stainless steel and is normally flooded to an elevation 1 ft, 2 in. below the operating floor deck. Subsection 9.1.2 describes the design bases and layout of the fuel storage area.

The design and analysis procedures for the R/B, other than the PCCV and containment internal structure, including assumptions on boundary conditions and expected behavior under loads, are in accordance with ~~ACI 349~~ACI 349-06 (Reference 3.8-8) for concrete structures, with AISC N690 (Reference 3.8-9) for steel structures, and with American Iron and Steel Institute (AISI) specification for cold formed steel structures (Reference 3.8-38). MIC-03-03-00066

The design considers normal loads (including construction, dead, live, and thermal), and the SSE. Seismic forces are obtained from the dynamic analysis described in Subsection 3.7.2. These loads are applied to the linear elastic FE model. ~~, which extends to the base of the R/B foundation, as equivalent static forces. Soil stiffnesses derived from the standard plant soil profiles are assigned to the subgrade for the design of the overall R/B, and t~~The design of the R/B ~~superstructure~~complex is ~~also~~ performed considering a fixed-base condition at the ~~bottom of the foundation~~top of the basemat. Loads and load combinations are given in Subsection 3.8.4.3. MIC-03-03-00057

The design of the R/B's flexible shear walls and floor slabs, like that of the main steam piping room with many openings, takes into account the out-of-plane bending and shear loads, such as live load, dead load, and seismic load. Also, the walls and slabs of the spent fuel pit and the emergency feedwater pit are designed to resist the out-of-plane bending and shear loads, ~~such as live load, dead load, seismic,~~created by hydrostatic~~,~~ and hydrodynamic pressure. MIC-03-03-00057

The R/B is analyzed using a three-dimensional FE model with the ANSYS computer codes (Reference 3.8-14). The FE model is shown in Figure 3.8.4-2.

The basemat design is described in Subsection 3.8.5.

3.8.4.4.1.1 Structural Design of ~~Critical Sections~~Structural Elements

MIC-03-03-00057

This subsection summarizes the structural design of representative seismic category I structural elements in the R/B. These structural elements are listed below and the corresponding location numbers are shown on Figure 3.8.4-3.

SECTION 1 West ~~exterior wall of R/B~~common wall between R/B and A/B, elevation 3 ft, 7 in. to elevation 101 ft, 0 in. ~~This exterior wall illustrates typical loads such as temperature gradients, seismic, and tornado missile, and hurricane missile.~~This wall illustrates a common wall resisting seismic loads carried by both buildings. MIC-03-03-00057 DCD_02-03 S01

SECTION 2 South interior wall of R/B, elevation 3 ft, 7 in. to elevation 101 ft, 0 in. ~~This is one of the most highly stressed shear walls.~~ MIC-03-03-00057

SECTION 3 The north exterior wall of spent fuel pit, elevation 30 ft, 1 in. to elevation 76 ft, 5 in. and the slab of spent fuel pit at elevation 30 ft, 1 in. The wall is subjected to temperature gradients, seismic, hydrostatic and hydrodynamic loads. MIC-03-03-00057

AREA 3 The slab of spent fuel pit at elevation 30 ft, 1 in. The slab is subjected to temperature gradients, seismic, hydrostatic and hydrodynamic loads. MIC-03-03-00057

SECTION 4 South exterior wall of R/B, elevation 3 ft, 7 in. to elevation 115 ft, 6 in. This exterior wall is subjected to typical loads such as temperature gradients, seismic, hydrodynamic pressure, ~~and~~ tornado missile, and hurricane missile. DCD_02-03 S01

AREA 4 The slab of emergency feedwater pit at elevation 76 ft, 5 in. The slab is a unique area encompassing the water storage pit. The slab is subjected to hydrostatic, hydrodynamic, and seismic loads. MIC-03-03-00057

3.8.4.4.1.2 Shear Walls

Structural Description

Shear walls in the R/B vary in thickness, configuration, aspect ratio, and amount of reinforcement. The stress levels in shear walls depend on these parameters and the seismic acceleration level. The walls are monolithically cast with the concrete floor slabs. The in-plane behavior of these shear walls, including the large openings, is adequately represented in the analytical models for the global seismic response. The shear walls are used as the primary system for resisting lateral loads, such as earthquakes.

Design Approach

The R/B shear walls are designed to withstand the loads specified in Subsection 3.8.4.3. Dead, live, thermal, seismic, and other normal operating condition loads are considered in the shear wall design. MIC-03-03-00057

West ~~Exterior~~Common Wall

MIC-03-03-00057

The west ~~exterior~~ reinforced concrete wall is a common wall between R/B and A/B, which extends from ~~the top of the basemat area at~~ elevation 3 ft, 7 in. to the roof at elevation 101 ft, 0 in. The wall is designed as a Category I structure. The wall segments are typically 28 in. to 40 in. thick. The wall is designed for the applicable loads including dead load, live load, and seismic loads~~, thermal loads, hurricane loads, and tornado missile loads~~. As shown in Figure 3.8.4-4, the wall is divided in 4 segments for design purposes. Table 3.8.4-6 presents the typical details of the reinforcement for each SECTION 1 wall zone. Figure 3.8.4-4 shows the typical reinforcement for the west ~~exterior~~common wall at SECTION 1.

MIC-03-03-00057
DCD_02-03 S01
MIC-03-03-00057

South Interior Wall

The south interior reinforced concrete wall extends from ~~the top of the basemat area at~~ elevation 3 ft, 7 in. to the roof at elevation 101 ft, 0 in. The wall segments are typically 40 in. to ~~44~~52 in. thick. The wall is designed for the applicable loads including dead load, live load, and seismic loads~~, and thermal loads~~. As shown in Figure 3.8.4-5, the wall is divided in 5 segments for design purposes. Table 3.8.4-7 presents the typical details of the reinforcement for each SECTION 2 wall zone. Figure 3.8.4-5 shows the typical reinforcement for the ~~west exterior~~south interior wall at SECTION 2.

MIC-03-03-00057
MIC-03-03-00057
MIC-03-03-00057

North Exterior Wall of Spent Fuel Pit

The north exterior reinforced concrete wall of the spent fuel pit extends from elevation 30 ft, 1 in. to the roof at elevation 76 ft, 5 in. The wall segments are typically 93 in. to 152 in. thick. The wall is designed for the applicable loads including dead load, live load, hydrostatic and hydrodynamic loads, seismic loads, spent fuel rack reaction loads, and thermal loads. As shown in Figure 3.8.4-6, the wall is divided in 3 segments for design purposes. Table 3.8.4-8 presents the typical details of the reinforcement for each SECTION 3 wall zone. Figure 3.8.4-6 shows the typical reinforcement for the ~~west~~north exterior wall at SECTION 3.

MIC-03-03-00057

South Exterior Wall

The south exterior reinforced concrete wall extends from ~~the top of the basemat area at~~ elevation 3 ft, 7 in. to the roof at elevation 115 ft, 6 in. The wall segments are typically ~~4~~60 in. ~~to 44 in.~~ thick. The wall is designed for the applicable loads including dead load, live load, hydrostatic and hydrodynamic loads (for Emergency Feedwater Pit wall), seismic loads, thermal loads, ~~and tornado missile load~~tornado loads and hurricane loads. As shown in Figure 3.8.4-7, the wall is divided in 5 segments for design purposes. Table 3.8.4-9 presents the typical details of the reinforcement for each SECTION 4 wall zone. Figure 3.8.4-7 shows the typical reinforcement for the ~~west~~south exterior wall at ~~Section~~SECTION 4.

MIC-03-03-00057
DCD_02-03 S01
MIC-03-03-00057

3.8.4.4.1.3 Floor and Roof

Design Approach

The concrete slab and the steel reinforcement of the composite section are evaluated for normal and extreme environmental conditions. The slab concrete and the reinforcement are designed to meet the requirements of the ACI 349-06 Code (Reference 3.8-8). The slab design considers the in-plane and out-of-plane seismic forces. The global in-plane and out-of-plane forces are obtained from the ~~equivalent static analysis of the~~ three-dimensional FE model of the R/B complex. MIC-03-03-00066 MIC-03-03-00057

Spent Fuel Pit Slab at Elevation 30 ft, 1 in., AREA 3

This concrete slab is designed for the applicable loads including dead load, live load, hydrostatic and hydrodynamic loads, seismic loads, spent fuel rack reaction loads, and thermal loads. The concrete slab is 126 in. thick. Table 3.8.4-10 presents the typical details of the reinforcement for AREA 3. Figure 3.8.4-8 shows the typical reinforcement at AREA 3.

Emergency Feedwater Pit Slab at Elevation 76 ft, 5 in., AREA 4

This concrete slab is designed for the applicable loads including dead load, live load, hydrostatic and hydrodynamic loads, and seismic loads~~, and thermal loads~~. The concrete slab is 52 in. thick. Table 3.8.4-11 presents the typical details of the reinforcement for AREA 4. Figure 3.8.4-9 shows the typical reinforcement at AREA 4. MIC-03-03-00057

3.8.4.4.1.4 Below Grade Exterior Walls MIC-03-03-00057

Exterior concrete walls below grade of seismic category I structures are designed using load combinations accounting for static lateral earth pressure (including soil surcharges) and dynamic lateral earth pressure, including effects of the water table. Load combinations are presented in Table 3.8.4-3.

The lateral earth pressure distribution profiles on below-grade exterior walls are developed in accordance with Acceptance Criterion II.4.H of SRP 3.8.4 (Reference 3.8-40) by evaluating: (1) lateral earth pressure equal to the sum of the static earth pressure plus the dynamic earth pressure calculated in accordance with Section 3.5.3.2 of ASCE 4 (Reference 3.8-34); and (2) lateral earth pressure equal to the passive earth pressure.

The envelope of the two pressure profiles is applied to the detailed model as equivalent static loads for purposes of design, in combination with other applicable loads. When computing lateral earth pressure due to static plus dynamic pressure, the water table is considered to be at plant grade to maximize the load on the walls. When computing the lateral earth pressure due to passive earth pressure, the water table is considered to be at the bottom of the basemat level in order to maximize the passive resistance for conservative design of the walls.

MIC-03-03-00057

Hydrostatic Pressure

The hydrostatic pressure on the wall at depth of z from the ground surface is calculated as:

$$P_{hydro} = \gamma_{water} \cdot z$$

where γ_{water} = 62.4 pcf is the unit weight of water.

Static Lateral Earth Pressure

The static lateral earth pressures on the exterior walls consist of static at-rest earth pressure, and pressure due to surcharge. The total static lateral earth pressure at depth of z from the ground surface is calculated as:

$$P_{static} = K_0 \cdot \gamma_{eff} \cdot z + K_0 \cdot P_{surcharge}$$

where $P_{surcharge}$ = 450 psf is the surcharge load on the ground surface.

Dynamic Lateral Earth Pressure due to Horizontal Motion

The horizontal earthquake excitation induced lateral pressure, denoted as P_{sh}, is calculated by interpolating and applying Wood's solution included in Figure 3.5-1 of ASCE 4 (Reference 3.8-34) for the following soil and seismic parameters:

Poisson's ratio ν = 0.4 (conservative value for granular soil)

Coefficient C_{ν} as a function of Poisson's ratio = 1.04

Soil unit weight: saturated, γ_{sat} = 130 pcf

Wall height H = 42.25 ft

Horizontal seismic coefficient in g's α_h = 0.5

The saturated unit weight of the backfill soil is used assuming that the pore water will move together (in-phase) with the soil during earthquake shaking, and the inertial force is proportional to the total weight of the embedment soil. This assumption is conservative since it does not consider the dissipation of energy due to the viscous flow of the ground water in the soil skeleton. The SSI and SSSI analyses of the R/B complex result in a maximum average horizontal acceleration of approximately 0.5g along the embedded perimeter of its exterior walls. Therefore, a value of 0.5 is used for the horizontal seismic coefficient.

Therefore, the total static and dynamic lateral earth pressure on the below-grade exterior walls is calculated as follows:

$$P_s = P_{sh} + P_{static} + P_{hydro}$$

Passive Earth Pressure

MIC-03-03-00057

The passive earth pressure, assuming Rankine's theory, has the expression:

$$P_p = K_p \cdot \gamma_{unsat} \cdot z + K_p \cdot P_{surcharge}$$

where γ_{unsat} is taken as in-situ unit weight (125 pcf), and K_p = 3.69 is the passive earth pressure coefficient calculated assuming an internal friction angle of 35°.

Table 3.8.4-22 presents the numeric values of "Dynamic + Static Pressure" and "Total Passive Pressure." Figure 3.8.4-26 presents the "Dynamic + Static Pressure" and "Total Passive Pressure" profiles.

The total passive earth pressure is greater than the dynamic plus static lateral earth pressure below elevation -3.0 ft, while the dynamic plus static lateral earth pressure is the controlling pressure profile above elevation -3.0 ft. Therefore, a conservative envelope of the two pressure profiles is applied to the detailed model to design the exterior walls below-grade, in combination with other applicable loads.

Passive earth pressures on the R/B complex exterior walls at the interfaces with the AC/B and tank house structure are increased from those presented in Table 3.8.4-22 and Figure 3.8.4-26 and are calculated considering potential sliding effects. The passive pressures calculated in this manner are based on the Rankine earth pressure theory, modified to account for presence of a rigid structure within the passive soil wedge. The following conservative assumptions are used:

- The upper bound values for the strength and unit weight of the engineered fill are used.
- Consider the effect of out-of-phase motion by adding horizontal inertia forces induced by sliding in the soil wedge and in the adjacent buildings (AC/B and tank house), acting in the direction of increasing passive reaction.

Lateral earth pressure on the south side of the R/B complex is affected by relative sliding between the R/B complex and the T/B. The envelope of the passive earth pressures and those pressures induced by sliding is used for the design of the exterior below grade walls on the south side of the R/B complex (and on the north side of the T/B).

The COL Applicant is to verify that lateral earth pressures used in the standard plant design envelope site-specific lateral earth pressures.

3.8.4.4.2 East and West PS/Bs

The east and west PS/Bs provide two emergency power sources, and are reinforced concrete structures consisting of vertical shear/bearing walls and horizontal slabs. The walls carry the vertical loads from the structure to the basemat. Lateral loads are transferred to the walls by the roof and floor slabs.

The design and analysis procedures for the PS/Bs, as described above for the R/B ~~above~~ including assumptions on boundary conditions and expected behavior under loads (see

MIC-03-03-00057

Subsection 3.8.4.4), are in accordance with ~~ACI 349~~ACI 349-06 (Reference 3.8-~~7~~8) for concrete structures, with AISC N690 (Reference 3.8-~~8~~9) for steel structures, and AISI specification for cold formed steel structures Reference 3.8-38). MIC-03-03-00057 MIC-03-03-00066

The design considers normal loads including construction, dead, live, thermal, and the SSE. Seismic forces are obtained from the dynamic analysis described in Subsection 3.7.2. Loads and load combinations are provided in Subsection 3.8.4.3.

The PS/Bs are analyzed using a three-dimensional FE model with the ANSYS computer codes (Reference 3.8-14). The FE model is shown in Figure 3.8.4-10. The basemat design is described in Subsection 3.8.5.

3.8.4.4.2.1 Structural Design of ~~Critical Sections~~Structural Elements

MIC-03-03-00057

This subsection summarizes the structural design of representative seismic category I structural elements in the PS/Bs. These structural elements listed below are for the west and east PS/Bs~~, which is the worst case configuration and contains the most critical sections~~. Locations within the west PS/B are shown with corresponding sections and area on Figure 3.8.4-11 and Figure 3.8.4-12. Locations within the east PS/B are shown with corresponding sections and area on Figure 3.8.4-17 and Figure 3.8.4-18. MIC-03-03-00057

WEST PS/B:

~~SECTION~~ Section 1	South exterior wall of ~~w~~West PS/B, elevation -26 ft, 4 in. to elevation ~~3~~49 ft, ~~6~~0 in.~~ This exterior wall illustrates typical loads such as temperature gradients, seismic, and tornado missileand hurricane.~~
~~SECTION~~ Section 2	~~Typical i~~Interior wall of the West PS/B~~s~~, elevation -26 ft, 4 in. to elevation 3 ft, 7 in.~~ This is one of the most highly stressed shear walls.~~
Section 3	North exterior wall of the West PS/B, elevation -26 ft, 4 in. to elevation 49 ft, 0 in. This wall is a common wall with the A/B.
~~AREA~~ Area 1	The slab of PS/B at elevation 3 ft, 7 in. ~~The slab is subjected to live loads and temperature gradients~~.

DCD_02-03-S01

EAST PS/B:

Section 1	East exterior wall of East PS/B, elevation -26 ft, 4 in. to elevation 39 ft, 6 in.
Section 2	Interior wall of the East PS/B, elevation -26 ft, 4 in. to elevation 3 ft, 7 in.
Area 1	The slab of the East PS/B, elevation 3 ft, 7 in.

3.8.4.4.2.2 Shear Walls

Structural Description

All exterior walls are shear walls, however internal shear walls exist only in the north-south axis. The stress levels in shear walls depend on thickness, configuration, aspect

ratio, amount of reinforcement and the seismic acceleration level. The walls are monolithically cast with the concrete floor slabs. The in-plane behavior of these shear walls, including the large openings, is adequately represented in the analytical models for the global seismic response. The shear walls are used as the primary system for resisting the lateral loads, such as earthquakes.

Design Approach

The PS/B shear walls are designed to withstand the loads specified in Subsection 3.8.4.3. Dead, live, thermal, and other normal operating condition loads are considered in the shear wall design.

South Exterior Wall

The south exterior reinforced concrete wall extends from the top of the basemat area at elevation -26 ft, 4 in. to the roof at elevation 39 ft, 6 in. The walls are typically ~~21~~40 in. thick~~ above elevation 3 ft, 7 in. and 32 in. below elevation 3 ft, 7 in~~. The wall is designed for the applicable loads including dead load, live load, seismic loads, thermal loads, and tornado ~~missile load~~or hurricane loads. As shown in Figure 3.8.4-13, the wall is divided into ~~4 segments~~four sections, each for design purposes. Table 3.8.4-12 presents the typical details of the reinforcement for the SECTION 1 wall zone. Figure 3.8.4-13 shows the typical reinforcement of the south exterior wall at SECTION 1. MIC-03-03-00057 DCD_02-03 S01 MIC-03-03-00057

~~Typical~~Representative West Interior Wall MIC-03-03-00057

The ~~typical~~representative interior reinforced concrete wall extends from the top of the basemat area at elevation -26 ft, 4 in. to the slab at elevation 3 ft, 7 in. The walls are 20 in. thick. The wall is designed for the applicable loads including dead load, live load, seismic loads, and thermal loads. Table 3.8.4-13 presents the typical details of the reinforcement for SECTION 2 wall zone 1, which is applicable for all interior walls. Figure 3.8.4-14 shows the typical reinforcement for the interior wall at SECTION 2.

3.8.4.4.2.3 Floor

Design Approach

The concrete slab and the steel reinforcement of the composite section are evaluated for normal and extreme environmental conditions. The slab concrete and the reinforcement are designed to meet the requirements of American Concrete Institute standard ACI 349-06 (Reference 3.8-8). The slab design considers the in-plane and out-of-plane seismic forces. The global in-plane and out-of-plane forces are obtained from the ~~equivalent static analysis of the worst case~~ three-dimensional FE model of the PS/B. MIC-03-03-00066 MIC-03-03-00057

Slab at Elevation 3 ft, 7 in., AREA 1

The concrete slab is designed for the applicable loads including dead load, live load, seismic loads, and thermal loads. The concrete slab is 32 in. thick. Table 3.8.4-14 presents the typical details of the reinforcement for AREA 1. Figure 3.8.4-15 shows the typical reinforcement at AREA 1.~~, which is applicable for the entire floor slab area in the PS/Bs~~ MIC-03-03-00057

3.8.4.4.3 ESWPC

MIC-03-03-00057

The ESWPC contains portions of the piping from the ESWS, which provides service water for the component cooling water heat exchangers and essential chiller units. The walls carry the vertical loads from the structure to the basemat. Lateral loads are transferred to the walls by the roof and floor slabs.

The design and analysis procedures for the ESWPC, including assumptions on boundary conditions and expected behavior under loads, are in accordance with ACI 349-06 (Reference 3.8-8) for concrete structures. The design considers normal loads including construction, dead, live, thermal, and the SSE. Seismic forces are obtained from the dynamic analysis described in Subsection 3.7.2. Loads and load combinations are provided in Subsection 3.8.4.3.

The ESWPC is analyzed using a three-dimensional FE model with the ANSYS computer codes (Reference 3.8-14). The FE model is shown in Figures 3.8.4-2 and 3.8.4-10.

3.8.4.4.3.1 Structural Design of Critical Sections

This subsection summarizes the structural design of the representative seismic category I structural elements of the ESWPC. These structural elements, listed below, are subjected to large stress demands, and are considered to be the best representation of the structural design. The following locations within the eastern half of the ESWPC are shown with corresponding critical wall sections and slab area in Figure 3.8.4-22.

Section 1	South exterior wall of the ESWPC, elevation -26ft, 4in. to elevation 1ft, 7in.
Section 2	Exterior transverse wall of the ESWPC, elevation -9ft, 8in. to elevation 1ft, 7in.
Area 1	The slab of the ESWPC, elevation -15ft, 8in.

3.8.4.4.3.2 Shear Walls

Structural Description

The stress levels in shear walls depend on thickness, configuration, aspect ratio, amount of reinforcement and seismic acceleration level. The walls are cast with the concrete floor slabs; reinforcing steel bars are adequately developed between structural elements. The in-plane behavior of these shear walls is adequately represented in the analytical model for the global seismic response. The shear walls are used as the primary system for resisting the lateral loads, such as earthquakes.

Design Approach

The ESWPC shear walls are designed to withstand the loads specified in Subsection 3.8.4.3. Dead, live, thermal, seismic, and other normal operating condition loads are considered in the shear wall design.

South Exterior Wall MIC-03-03-00057

The south exterior reinforced concrete wall extends from the top of the basemat area at elevation -26 ft, 4 in. to the slab at elevation 1 ft, 7 in. The wall is 36 in. thick. The wall is designed for the applicable loads including dead load, live load, seismic loads, thermal loads, and tornado or hurricane loads. As shown in Figure 3.8.4-23, the wall is divided into 3 zones for design purposes. Table 3.8.4-19 presents the typical details of the reinforcement for the south exterior wall. Figure 3.8.4-23 shows the typical reinforcement of the south exterior wall (SECTION 1).

Representative Exterior Transverse Wall

The typical exterior transverse reinforced concrete wall extends from the top of the second floor at elevation -9 ft, 8 in. to the slab at elevation 1 ft, 7 in. The wall is 24 in. thick. The wall is designed for the applicable loads including dead load, live load, seismic loads, and thermal loads. Table 3.8.4-20 presents the typical details of the reinforcement for SECTION 2. Figure 3.8.4-24 shows the typical reinforcement of SECTION 2.

3.8.4.4.3.3 Floor

Design Approach

The concrete slab and the steel reinforcement are designed to withstand the loads specified in Subsection 3.8.4.3. Dead, live, thermal, seismic, and other normal operating condition loads are considered in the slab design. The slab concrete and the reinforcement are designed to meet the requirements of ACI 349-06 (Reference 3.8-8). The slab design considers the in-plane and out-of-plane seismic forces. The global in-plane and out-of-plane forces are obtained from the three-dimensional FE model of the ESWPC.

Slab at Elevation -15 ft, 8 in., AREA 1

The concrete slab is designed for the applicable loads including dead load, live load, seismic loads, and thermal loads. The concrete slab is 24 in. thick. Table 3.8.4-21 presents the typical details of the reinforcement for AREA 1. Figure 3.8.4-25 shows the typical reinforcement at AREA 1.

3.8.4.4.4 Other Seismic Category I Structures

The design and analysis procedures for other seismic category I concrete structures are in accordance with ~~ACI 349~~ACI 349-06 (Reference 3.8-8). The design and analysis procedures for seismic category I steel structures are in accordance with AISC N690 (Reference 3.8-9). MIC-03-03-00066

Seismic category I structures are modeled globally using applicable loads, including equivalent dead and live loads, in load combinations that include design-basis earthquake accelerations as described in Section 3.7. Computer modeling utilizes three-dimensional FE models to globally analyze the beams, columns, slabs, and shear walls. Individual structural members are further analyzed for localized loading as described in specific load cases.

Concrete components such as walls, slabs, and ~~foundations~~basemats are evaluated for the effects of frame interaction when the flexural moment from seismic loads is a large percentage of the flexural capacity. When at least two-thirds of the flexural capacity of a component is from seismic loads alone, the component is designed as a frame to assure design capacity even under a seismic margin earthquake equal to 150% of the SSE, in accordance with RG 1.142 (Reference 3.8-19), Regulatory Position 3. MIC-03-03-00057

Concrete members that are subject to torsion and combined shear and torsion are evaluated to the standards of Section 11.6 of ACI 349-06 (Reference 3.8-8). MIC-03-03-00066

~~Design and analysis of the spent fuel pit, the spent fuel racks, and the fuel handling system is in accordance with Appendix D of NUREG-0800, SRP 3.8.4 (Reference 3.8-40). Additional general information is provided by ANSI/ANS-57.7 (Reference 3.8-33). Subsection 9.1.2 describes the design bases and layout of the spent fuel pit, the spent fuel racks, and the fuel handling system.~~ MIC-03-03-00057

Exterior concrete walls below grade and basemat of seismic category I structures are designed using load combinations accounting for sub-grade loads including static and dynamic lateral earth pressure, soil surcharges, and effects of maximum water table. ~~Dynamic lateral earth pressure is calculated in accordance with ASCE 4-98 (Reference 3.8-34).as described in Section 3.7 of Technical Report MUAP-10006 (Reference 3.7-48). The calculation approach follows guidance given in ASCE 4-98 (Reference 3.8-34) for computing dynamic lateral earth pressure, and also accounts for increases in horizontal pressure due to the vertical component of earthquake excitation. The static and seismic lateral earth pressures due to the vertical and horizontal components of the earthquake are combined by conservatively assuming that the peak vertical and horizontal response accelerations in the embedment soil occur simultaneously. The use of saturated unit weight for the soil provides the most conservative case for including the effects of groundwater in the calculations of the dynamic earth pressures because it considers that the response of the two phases of the system, the groundwater and soil, to be completely in phase and does not consider the dissipation of energy due to the viscous flow of the groundwater. The total dynamic lateral pressure computed in this manner envelops the in-phase sum of the Wood's soil pressure (per ASCE 4-98) and the Westergaard formula for computing hydrodynamic groundwater pressure under seismic loads on a vertical wall bordering a free body of water (e.g. reservoir).~~ DCD_03.07.02-98 MIC-03-03-00057

Structural steel framing in seismic category I structures is primarily for the support of distribution systems, access platforms, and other plant appurtenances. Steel members are sized and detailed based on maximum stresses and reactions determined through conservative manual calculations and computer models based on pinned-end connections, including slotted hole clip angle connections, to relieve thermal expansion forces where appropriate, unless detailed to develop end moments in accordance with AISC N690 (Reference 3.8-9). The design of the support anchorage to the concrete structure is in accordance with ACI 349-06, Appendix ~~B~~D (Reference 3.8-8), ~~RG 1.142 (Reference 3.8-19),~~ and RG 1.199 (Reference 3.8-41). MIC-03-03-00066 MIC-03-03-00057

The design and analysis procedures for seismic category I distribution systems, such as HVAC ducts, conduits, and cable trays including their respective seismic category I supports, are in accordance with AISC N690 (Reference 3.8-~~8~~9) and AISI Specification MIC-03-03-00066

for Design of Cold-Formed Steel Members (Reference 3.8-~~34~~38). The following appendices provide additional discussion of the design and analysis of these subsystems. MIC-03-03-00066

- Appendix 3A Heating, Ventilation, and Air Conditioning Ducts and Duct Supports
- Appendix 3F Design of Conduits and Conduit Supports
- Appendix 3G Seismic Qualification of Cable Trays and Supports

The COL Applicant is to provide design and analysis procedures for the ESWPT, UHSRS, and PSFSVs.

3.8.4.4.5 Seismic Category II Structures

Seismic category II structures need not remain functional during and after an SSE. However, such structures must not fall or displace to the point they could damage seismic category I SSCs.

Seismic category II structures and subsystems are analyzed and designed using the same methods and stress limits specified for seismic category I structures and subsystems, and the same load combinations and stress coefficients given in Table 3.8.4-4.

3.8.4.5 Structural Acceptance Criteria

Structural acceptance criteria are listed in Table 3.8.4-3 for concrete structures and in Table 3.8.4-4 for steel structures, and are in accordance with ~~ACI 349~~ACI 349-06 (Reference 3.8-8) and AISC N690 (Reference 3.8-9), except as provided in the table notes. MIC-03-03-00066

The deflection of the structural members is limited to the maximum values as specified in ~~ACI 349~~ACI 349-06 (Reference 3.8-8) and AISC N690 (Reference 3.8-9), as applicable. MIC-03-03-00066

Subsection 3.8.5.5 identifies acceptance criteria applicable to additional basemat load combinations.

3.8.4.6 Materials, Quality Control, and Special Construction Techniques

The following information pertains to the materials, quality control programs, and any special construction techniques utilized in the construction of the seismic category I structures for the US-APWR.

3.8.4.6.1 Materials

The major materials of construction in seismic category I structures are concrete, grout, steel reinforcement bars, splices of steel reinforcing bars, structural steel~~ shapes~~, and anchors. MIC-03-03-00057

3.8.4.6.1.1 Concrete

~~Concrete utilized in standard plant seismic category I structures, other than PCCV and upper part of the tendon gallery in the basemat, has a compressive strength of f'_c = 4,000 psi~~Concrete which has a compressive strength of 5000 psi is utilized in standard plant seismic category I structures other than PCCV, upper part of the tendon gallery in the basemat and the containment internal structure (CIS). Concrete utilized in the PCCV and upper part of the tendon gallery in the basemat has a compressive strength of f'_c = 7,000 psi and is subject to the PCCV material requirements in Subsection 3.8.1.6, including the requirements of ASME III, Division 2 (Reference 3.8-2), as shown in Figure 3.8.5-4. The COL Applicant is to specify concrete strength utilized in non-standard plant seismic category I structures. A test age of 28 days is used for normal concrete. Batching and placement of concrete is performed in accordance with ACI 349-06 (Reference 3.8-8), ACI 304R (Reference 3.8-~~38~~39), and ASTM C 94 (Reference 3.8-42). During construction, volume changes in mass concrete are controlled where necessary by applying measures and provisions outlined in ACI 207.2R (Reference 3.8-52) and ACI 207.4R (Reference 3.8-53). MIC-03-06-00073 MIC-03-03-00066

Portland cement is used in the concrete conforms to ASTM C 150, Type II (Reference 3.8-43) standards. The confirmation of the chemical composition of the cement properties is validated by certified copies of test reports showing the chemical composition of each Portland cement shipment.

Aggregates used in the concrete conform to ASTM C 33 (Reference 3.8-44). Aggregate and source acceptance is based on documented test results for each source and random sampling of shipments based on MIL-STD-1916 (Reference 3.8-45).

Water and ice used in the concrete conform to the requirements of ~~ACI 349~~ACI 349-06 (Reference 3.8-8). MIC-03-03-00066

Admixtures include an air entraining admixture, pozzolans, and a water reducing admixture. The admixtures, except the pozzolans, are stored in a liquid state. For certain concrete placement operations, self-consolidating concrete is used to minimize the potential for voids in areas of high congestion or limited access. Self-consolidating concrete is able to flow under its own weight and improves fluidity while resisting segregation. It is able to completely fill the formwork, even in the presence of dense reinforcement, without the need of vibration, while maintaining homogeneity. Concrete material and installation practices for self-consolidating concrete are in accordance with ACI 237R (Reference 3.8-81). MIC-03-03-00057

Admixtures and concrete mix conform to the following requirements:

Pozzolans	ASTM C 618
Sampling and Testing of Pozzolans	ASTM C 311
Air Entraining Admixtures	ASTM C 260
Water Reducing Admixtures	ASTM C 494

Concrete Mix	ACI 211.1 and ASTM C 94 (Reference 3.8-45)
Concrete Mix Testing	ASTM C 172, ASTM C 192, and ASTM C 39
Minimum Number of Strength Tests~~(1)~~	ACI 349-06 (Reference 3.8-~~7~~8) ~~and ASME NQA-2 (Reference 3.8-37)~~ MIC-03-03-00066

~~Note 1: In lieu of frequency of compressive strength testing specified by Section 5.6.1.1 of ACI 349-97 (Reference 3.8-8) or that specified by ASME NQA-2 (Reference 3.8-37), the following is acceptable per RG 1.142, Regulatory Position 5 (Reference 3.8-19).~~ MIC-03-03-00066

Samples for strength tests of concrete should be taken at least once per day for each class of concrete placed or at least once for each 100 cubic yards of concrete placed. When the standard deviation for 30 consecutive tests of a given class is less than 600 psi, the amount of concrete placed between tests may be increased by 50 cubic yards for each 100 psi the standard deviation is below 600 psi, except that the minimum testing rate should not be less than one test for each shift when the concrete is placed on more than one shift per day or not less than one test for each 200 cubic yards of concrete placed. The test frequency should revert to once for each 100 cubic yards placed if the data for any 30 consecutive tests indicate a higher standard deviation than the value controlling the decreased test frequency.

3.8.4.6.1.2 Grout

Grout is used to transfer load from machinery, equipment, and column bases to their foundations, and to anchor the reinforcing bars, dowels, and anchor rods into hardened concrete. Grout generally consists of Portland cement, sand, water, and admixtures. Epoxy grout is only used in areas where radiation levels and temperature levels are compatible with epoxy use.

Portland cement used in the concrete conforms to ASTM C 150, Type II (Reference 3.8-43). Sand must be clean with gradation and fineness in accordance with ASTM C33 (Reference 3.8-44). Water and ice used in the grout conforms to the requirements of ACI 349-06 (Reference 3.8-8). Water-reducing and/or retarding admixtures conform to ASTM C494. MIC-03-03-00066

3.8.4.6.1.3 Steel for Concrete Reinforcement

Steel bars for concrete reinforcement are deformed bars conforming to ASTM A 6~~1~~15, Grade 60, or ASTM A 706, Grade 60 (minimum yield strength of 60,000 psi). For each heat (batch) of reinforcing steel bars, certified mill test reports are provided. Additionally, for each 50 tons/bar size/heat, a minimum of one tensile test is performed. Where mechanical anchorage can not be achieved through the use of deformed bars, headed steel bars conforming to ASTM A 970 are used. MIC-03-03-00057

Coated reinforcing steel is not used. Placement of concrete reinforcement is in accordance with ~~ACI 349~~ACI 349-06 (Reference 3.8-8), Sections 7.5 and 7.6. MIC-03-03-00066

3.8.4.6.1.4 Splices

Reinforcement splices comply with ~~ACI 349~~ACI 349-06, Chapter 12 (Reference 3.8-8). All bars are sheared or cut to the correct length shown on the bar bending schedules from continuous rolled bar stock. In general, all splices are made with a wire-tied lap of length in accordance with ACI 408R. Mechanical splices used are in conformance with ACI 4~~93~~39.3R. Mechanical splices develop 125% of the specified yield strength of the spliced bar. Welding of reinforcing steel, other than in the PCCV, is performed in accordance with American Welding Society (AWS) D1.4 (Reference 3.8-46). MIC-03-03-00066 MIC-03-03-00057

3.8.4.6.1.5 Structural Steel ~~Shapes~~

MIC-03-03-00057

Structural steel ~~shapes~~ used in other seismic category I structures conform to the following standards:

Standard	Description
ASTM A 1	Standard Specification for Carbon Steel Tee Rails
ASTM A 3	Standard Specification for Steel Joint Bars, Low, Medium, and High Carbon (Non-Heat Treated)
ASTM A 36	~~Rolled Shapes, Plates, and Bars~~Standard Specification for Carbon Structural Steel
ASTM A 49	Standard Specification for Heat Treated Carbon Steel Joint Bars, Microalloyed Joint Bars, and Forged Carbon Steel Compromise Joint Bars
ASTM A 53	Standard Specification for Pipe, Steel, Black and Hot-Dipped, Zinc-Coated, Welded and Seamless
ASTM A 90	Standard Test Method for Weight (Mass) of Coating on Iron or Steel Articles with Zinc or Zinc-Alloy Coatings
ASTM A 108	Standard Specification for Steel Bars, Carbon, and Alloy Cold-Finished~~, Standard Quality~~
ASTM A 123	Standard Specification for Zinc (Hot-Dip Galvanized) Coatings on Iron and Steel Products
ASTM A 143	Standard Practice for Safeguarding Against Embrittlement of Hot-Dip Galvanized Structural Steel Products and Procedure for Detecting Embrittlement
ASTM A 153	Standard Specification for Zinc Coating (Hot-Dip) on Iron and Steel Hardware

MIC-03-03-00057 MIC-03-03-00057 MIC-03-03-00057 MIC-03-03-00057

Standard	Description	
ASTM A 240	~~Nitronic 33 Stainless Steel (designation S2400, Type XM-29)~~Standard Specification for Chromium and Chromium-Nickel Stainless Steel Plate, Sheet, and Strip for Pressure Vessels and General Applications	MIC-03-03-00057
ASTM A 307	Standard Specification for Carbon Steel Bolts and Studs, 60,000 psi Tensile Strength	
ASTM A 325	Standard Specification for Structural Bolts, Steel, Heat Treated, 120/105 ksi Minimum Tensile strength	
ASTM A 354	~~Quenched and Tempered Alloy Steel Bolts (Grade BC)~~Standard Specification for Quenched and Tempered Alloy Steel Bolts, Studs, and Other Externally Threaded Fasteners	MIC-03-03-00057
ASTM A 449	Standard Specification for Quenched and Tempered Steel Bolts and Studs	
ASTM A 490	~~Standard Specification for Heat-Treated Steel Structural Bolts, 150-ksi Minimum Tensile Strength~~Standard Specification for Structural Bolts, Alloy Steel, Heat Treated 150 ksi Minimum Tensile Strength	MIC-03-03-00057
ASTM A 500	Standard Specification for Cold-Formed Welded and Seamless Carbon Steel Structural Tubing in Rounds and Shapes	
ASTM A 501	Standard Specification for Hot-Formed Welded and Seamless Carbon Steel Structural Tubing	
ASTM A 563	Standard Specification for Carbon and Alloy Steel Nuts	
ASTM A 572	Standard Specification for High-Strength Low-Alloy Columbium-Vanadium Structural Steel	
ASTM A 588	Standard Specification for High-Strength Low-Alloy Structural Steel with 50 ksi Minimum Yield Point to 4-in ~~t~~Thick	MIC-03-03-00057
ASTM A 615	Standard Specification for Deformed and Plain ~~Billet~~ Carbon-Steel Bars for Concrete Reinforcement	MIC-03-03-00057
ASTM A 653	Standard Specification for Steel Sheet, Zinc-Coated (Galvanized) or Zinc-Iron Alloy-Coated (Galvannealed) by the Hot-Dip Process	
ASTM A 668	Standard Specification for Steel Forgings, Carbon and Alloy, for General Industrial Use	
ASTM A 706	Standard Specification for Low~~-~~-Alloy Steel Deformed and Plain Bars for Concrete Reinforcement	MIC-03-03-00057
ASTM A 759	Standard Specification for Carbon Steel Crane Rails	

Standard	Description	
ASTM A 786	~~Standard Specification for Rolled Steel Floor Plate~~Standard Specification for Hot-Rolled Carbon, Low-Alloy, High-Strength Low-Alloy, and Alloy Steel Floor Plates	MIC-03-03-00057
ASTM A 924	Standard Specification for General Requirements for Steel Sheet, Metallic-Coated by the Hot-Dip Process	
ASTM A 970	Standard Specification~~s~~ for ~~Welded~~ Headed Steel Bars for Concrete Reinforcement	MIC-03-03-00057
ASTM A 992	Standard Specification for Structural Steel Shapes for Use in Building Framing	MIC-03-03-00057
ASTM A 1011	Standard Specification for Steel, Sheet and Strip, Hot-Rolled, Carbon, Structural, High-Strength Low-Alloy and High-Strength Low-Alloy with Improved Formability	
ASTM F 436	Standard Specification for Hardened Steel Washers	
ASTM F 959	Standard Specification for Compressible-Washer-Type Direct Tension Indicators for Use with Structural Fasteners	
ASTM F 1554	Standard Specification for~~Steel~~ ~~a~~Anchor ~~b~~Bolts, Steel, 36, 55, and 105-ksi Yield Strength	MIC-03-03-00057
ASTM F 1852	Standard Specification for “Twist Off” Type Tension Control Structural Bolt/Nut/Washer Assemblies, Steel, Heat Treated, 120/105 ksi Minimum Tensile Strength	

3.8.4.6.1.6 Anchors

Anchoring components and structural supports in concrete conform to following industry standards, RG 1.142 (Reference 3.8-19), and RG 1.199 (Reference 3.8-41). Expansion anchor bolts, where used, are as supplied by the manufacturer in accordance with their specifications.

ASTM A 193	Standard Specification for Alloy-Steel and Stainless Steel Bolting Materials for High Temperature ~~or High Pressure~~ Service~~ and Other Special Purpose Applications~~	MIC-03-03-00057
ASTM A 194	Standard Specification for Carbon and Alloy Steel Nuts for Bolts for High Pressure or High Temperature Service, or Both	MIC-03-03-00057
ASTM A 307	Standard Specification for Carbon Steel Bolts and Studs, 60,000 psi Tensile Strength	
ASTM A 325	Standard Specification for Structural Bolts, Steel, Heat Treated, 120/105 ksi Minimum Tensile Strength~~ Standard~~	MIC-03-03-00057

ASTM A 354	Standard Specification for Quenched and Tempered Alloy Steel Bolts, Studs, and Other Externally Threaded Fasteners	
ASTM A 449	~~Standard Specification for Hex Cap Screws, Bolts and Studs, Steel, Heat Treated, 120/105/90 ksi Minimum Tensile Strength~~Standard Specification for Quenched and Tempered Steel Bolts and Studs	MIC-03-03-00057
ASTM A 453	Standard Specification for High-Temperature Bolting Materials, with Expansion Coefficients Comparable to Austenitic Stainless Steels	
ASTM A 490	Standard Specification for Structural Bolts, Alloy Steel, Heat Treated, 150 ksi Minimum Tensile Strength~~ Standard~~	MIC-03-03-00057
ASTM A 540	Standard Specification for Alloy-Steel Bolting Materials for Special Applications	
ASTM A 615	~~"~~Standard Specification for Deformed and Plain ~~Billet~~ Carbon-Steel Bars for Concrete Reinforcement	MIC-03-03-00057
ASTM A 706	Standard Specification for Low~~-~~-Alloy Steel Deformed and Plain Bars for Concrete Reinforcement	MIC-03-03-00057
ASTM A 970	Standard Specification~~s~~ for ~~Welded~~ Headed Steel Bars for Concrete Reinforcement	MIC-03-03-00057
ASTM F 1554	~~Steel~~Standard Specification for ~~a~~Anchor ~~b~~Bolts, Steel 36, 55, and 105-ksi Yield Strength	MIC-03-03-00057

3.8.4.6.1.7 Masonry Walls

There are no safety-related reinforced masonry walls in seismic category I structures. A non-safety related masonry wall exists in the spray pump room located at the lowest level of the R/B, which is not subjected to pressure loads and is restrained against seismic accelerations to preclude damage to safety-related SSCs.

3.8.4.6.2 Quality Control

Chapter 17 details the quality assurance program for the US-APWR.

3.8.4.6.3 Special Construction Techniques

Standard provisions of ACI are to be applied where necessary to address issues related to the use of massive concrete pours. As stated in Subsection 3.8.4.6.1.1, volume changes in mass concrete are controlled where necessary by applying measures and provisions outlined in ACI 207.2R (Reference 3.8-52) and ACI 207.4R (Reference 3.8-53). The following summarizes the construction techniques commonly associated, either singularly or in combination, with massive concrete pours such as basemats:

- Limit the size of concrete pour.

- Use a checkerboard pattern of concrete placement in a single lift. To avoid a weak horizontal shear plane, a double lift placement of concrete, in general, is avoided. However, when it is absolutely needed to have two lifts, adequate design considerations and also, in general, shear stirrups are provided.

- Schedule concrete pours for the most advantageous day and time to control temperature rise in the concrete.

- Post-cooling can be performed by cooling the freshly placed concrete with running chilled water lines in the concrete.

3.8.4.7 Testing and Inservice Inspection Requirements

Seismic category I structures, except the PCCV, are monitored in accordance with paragraph (a)(2) of 10 CFR 50.65 (Reference 3.8-29), provided there is not significant degradation of the structure. Condition monitoring, is similar to that performed as part of the inservice inspection activities required by the ASME codes, is applied to these structures. The condition of all structures is assessed periodically. The appropriate frequency of the assessments is commensurate with the safety significance of the structure and its condition.

The COL Applicant is to establish a site-specific program for monitoring and maintenance of seismic category I structures in accordance with the requirements of NUMARC 93-01 (Reference 3.8-28) and 10 CFR 50.65 (Reference 3.8-29) as detailed in RG 1.160 (Reference 3.8-30). For seismic category I structures, monitoring is to include base settlements and differential displacements.

For water control structures, ISI programs are acceptable if in accordance with RG 1.127 (Reference 3.8-47). Water control structures covered by this program include concrete structures, embankment structures, spillway structures, outlet works, reservoirs, cooling water channels, canals and intake and discharge structures, and safety and performance instrumentation.

For seismic category I structures, it is important to accommodate ISI of ~~critical areas~~representative locations. Monitoring and maintaining the condition of other seismic category I structures are essential for plant safety. Any special design provisions (e.g., providing sufficient physical access, providing alternative means for identification of conditions in inaccessible areas that can lead to degradation, remote visual monitoring of high-radiation areas) to accommodate ISI of other seismic category I structures are to be provided on a case-by-case basis. MIC-03-03-00057

For plants with nonaggressive ground water/soil (i.e., pH greater than 5.5, chlorides less than 500 ppm, and sulfates less than 1,500 ppm), an acceptable program for normally inaccessible, below-grade concrete walls and foundations is to (1) examine the exposed portions of the below-grade concrete, when excavated for any reason, for signs of degradation; and (2) conduct periodic site monitoring of ground water chemistry, to confirm that the ground water remains nonaggressive.

For plants with aggressive ground water/soil (i.e., it exceeds any of the limits noted above), an acceptable approach is to implement a periodic surveillance program to

monitor the condition of normally inaccessible, below-grade concrete for signs of degradation.

3.8.4.7.1 Construction Inspection

Inspections relating to the construction of seismic category I and II SSCs are conducted in accordance with the codes applicable to the construction activities and/or materials. In addition, weld acceptance is performed in accordance with the NCIG, Visual Weld Acceptance Criteria for Structural Welding at Nuclear Power Plants, NCIG-01, Revision 2 (Reference 3.8-31).

3.8.5 Foundations

3.8.5.1 Description of the Foundations

~~Each building is isolated on a separate concrete basemat as identified in Subsection 3.8.4. The PCCV and the containment internal structure are integral with the R/B on a common basemat. Adjoining~~The R/B, PCCV, east PS/B, west PS/B, ESWPC, A/B and containment internal structure are supported on a common basemat. Adjacent building basemats~~, such as the east and west PS/Bs, A/B, and T/B,~~ for the AC/B tank house are structurally separated by a ~~4~~16 in. gap at and below ~~the~~ grade. ~~This requirement does not apply to engineered mat fill concrete that is designed to be part of the foundation subgrade.~~The T/B basemat is located approximately 20 ft, 6 in. away from the R/B complex structure. MIC-03-03-00057

~~Basemats are~~The R/B complex basemat is located at a depth below the zone of maximum frost penetration, taken as 4 ft below grade. The COL Applicant is to determine if the site-specific zone of maximum frost penetration extends below the depth of the basemats for the standard plant, and to pour ~~fill concrete~~a mud mat under any basemat above the frost line so that the bottom of ~~fill concrete~~mud mat is below the maximum frost penetration level. MIC-03-03-00057

3.8.5.1.1 Reactor Building ~~and Enveloped Structures~~Complex MIC-03-03-00057

~~The R/B, with the PCCV and containment internal structure at its center, is built on a common basemat and isolated from the adjacent A/B, east and west PS/Bs, and T/B. The basemat of the R/B is essentially a rectangular shaped reinforced concrete mat and is composed of two parts. One part of the basemat is for the PCCV and containment internal structure, and the other part is for the remaining seismic category I basemat for the R/B. The length of the basemat in the north-south direction is 309308 ft, 011 in., and in the east-west direction is 210213 ft, 04 in, as shown in Figure 3J-1. The central region,generally circular with a diameter of approximately 187 ft, supports the PCCV and containment internal structure with a thickness of approximately 38 ft, 2 in. The peripheral portion which supports the R/B is 9 ft, 11 in. thick.~~The R/B, PCCV, east PS/B, west PS/B, ESWPC, A/B and CIS are built on a common basemat and isolated from adjacent AC/B and T/B. The basemat of the R/B complex is essentially a rectangular shaped reinforced concrete mat. The length of the basemat in the north-south direction is 334 ft, 7 in., and in the east-west direction at its greatest point is 413 ft-0 in., as shown in Figure 3J-1. The central region of the basemat with a diameter of approximately 187 ft supports the PCCV DCD_03.07.02-35

and CIS with a thickness of approximately 38 ft, 2 in. The peripheral portion, which supports the east PS/B, west PS/B, ESWPC and A/B is 13 ft, 4 in. MIC-03-03-00057

The basemat includes hollow portions such as the tendon gallery, tendon gallery access tunnel, and other portions such as in-core chase and CV recirculation sump. Since the vertical tendons are anchored at the roof of the tendon gallery, the upper part of the tendon gallery is important from the structural point of view.

The basemat reinforcement consists of a top horizontal layer of reinforcement, a bottom horizontal layer of reinforcement, and vertical shear reinforcement. The bottom layer of reinforcement is arranged in a rectangular grid. The top layer of reinforcement is arranged in a rectangular grid at the center of the ~~mat~~PCCV and radiates outward in a polar pattern in order to avoid interference with PCCV reinforcement. The top and bottom reinforcement at the upper portion of the tendon gallery is in a polar pattern. MIC-03-03-00057

Outlines of the R/B, PCCV and ~~containment internal structure~~CIS including the basemat are provided in Figures 3.8.5-1 through 3.8.5-3. MIC-03-03-00057

3.8.5.1.2 ~~Power Source Buildings~~Deleted

MIC-03-03-00057

~~The east and west PS/Bs are free standing structures, each on an independent reinforced concrete basemat. Each PS/B basemat is a rectangular reinforced concrete mat with a thickness of 119 in. The bottom of basemat is at elevation -36 ft, 3 in.~~

~~The bottom layer of basemat reinforcement is arranged in a rectangular grid. The basemat also consists of a top layer of reinforcement, and vertical shear reinforcement.~~

3.8.5.1.3 Site Specific Structures

Other non-standard seismic category I plant buildings and structures of the US-APWR are designed by the COL Applicant based on site-specific subgrade conditions.

3.8.5.2 Applicable Codes, Standards and Specifications

The following industry codes, standards and specifications are applicable for the design, construction, materials, testing and inspections of the ~~PCCV basemat~~R/B complex basemat. Pressure retention requirements of the vessel are in accordance with the guidance from SRP 3.8.1. (Reference 3.8-7). MIC-03-03-00057

- Rules for Construction of Nuclear Facility Components, Division 2, Concrete Containments, Section III, American Society of Mechanical Engineers, 2001 Edition through the 2003 Addenda (hereafter referred to as ASME Code). (Reference 3.8-2).

  Note: Articles CC-1000 through CC-6000 of Section III, Division 2 are acceptable for the scope, material, design, construction, examination, and testing of concrete containments of nuclear power plants subject to the regulatory positions provided by RG 1.136 (Reference 3.8-3).

The following industry standards are applicable for the design and construction of ~~seismic category I~~the portion of the R/B complex basemat~~s~~ that is not required as a pressure MIC-03-03-00057

retention boundary. Other codes, standards and specifications applicable to materials, testing and inspections are provided in Subsections 3.8.4.6 and 3.8.4.7.

- ACI 349-0~~1~~6, Code Requirements for Nuclear Safety-Related Concrete Structures (ACI 349-06) and Commentary, ~~American Concrete Institute,~~ 200~~1~~6 (Reference 3.8-8) MIC-03-03-00066
- RG 1.142, Rev. 2, Safety-Related Concrete Structures for Nuclear Power Plants (Other Than Reactor Vessels and Containments), U.S. Nuclear Regulatory Commission, Washington, DC, November 2001. (Reference 3.8-19)

3.8.5.3 Loads and Load Combinations

Loads and load combinations are discussed in detail in Subsections 3.8.1.3 and 3.8.4.3. The containment design pressure P_d of 68 psi is included as an accident pressure in these load cases. Other load combinations applicable to the design of the basemat include acceptance criteria for overturning, sliding, and flotation as detailed in Table 3.8.5-1. The non-ASME portion of the basemat is designed in accordance with ~~ACI 349~~ACI 349-06 (Reference 3.8-8) and the provisions of RG 1.142 (Reference 3.8-19), where applicable. The reinforced concrete basemat for the ~~PCCV and enveloped containment internal structure are~~R/B complex is designed in accordance with ASME Code Section III, Division 2, Subsection CC (Reference 3.8-2). Figure 3.8.5-4 delineates basemat regions applicable to each Code. MIC-03-03-00066 MIC-03-03-00057

3.8.5.4 Design and Analysis Procedures

Based on the premise that seismic category I buildings basemats are not supported on bedrock, a computer analysis of the SSI is performed for static and dynamic loads. Subsection 3.7.2 provides further information.

The seismic category I structures are concrete, shear-wall structures consisting of vertical shear/bearing walls and horizontal floor slabs designed to SSE accelerations as discussed in Section 3.7. The walls carry the vertical loads from the structure to the basemat. Lateral loads are transferred to the walls by the roof and floor slabs. The walls then transmit the loads to the basemat. The walls also provide stiffness to the basemat and distribute the loads between them.

The applicable codes and standards for the design of the reinforced concrete basemat for ~~the PCCV and enveloped containment internal structure are designed in accordance with ASME Code Section III, Division 2, Subsection CC (Reference 3.8-2)~~R/B complex are discussed in Subsection 3.8.5.2. Other seismic category I basemats of reinforced concrete are designed in accordance with ~~ACI 349~~ACI 349-06 (Reference 3.8-8) and the provisions of RG 1.142 (Reference 3.8-19) where applicable. Table 3.8.5-2 identifies the material properties of concrete and Figure 3.8.5-4 delineates the governing codes based on region of the R/B complex~~, PCCV and containment internal structure~~ basemat. MIC-03-03-00057 MIC-03-03-00066 MIC-03-03-00057

3.8.5.4.1 Properties of Subgrade

For the purposes of the US-APWR standard design, the SSI effects are captured using a representative suite of soil profiles and depths to baserock material with frequency dependent properties. Section 3.7.2.4 provides further discussion relating to SSI and the selection of subgrade types.

The soil profiles, due to the frequency-dependency of multiple soil layers, are variable opposed to fixed values. Documenting of typical (generic) subgrade conditions is not applicable.

A set of ~~eight~~six (~~8~~6) generic layered profiles are ~~selected~~considered for SSI analyses, which strain-compatible properties, shear wave and compression wave velocities (Vs and Vp) and corresponding hysteretic damping values provide a wide variation of properties that addresses soil properties. The development of frequency dependent properties used in the seismic analyses is described further in Section 3.7.2.4. MIC-03-03-00057

The minimum allowable subgrade bearing capacity of 15,000 psf represents the maximum bearing pressures resulting from static load cases for the R/B~~ PCCV containment internal structure~~ complex common ~~foundation~~basemat, while the minimum allowable dynamic soil bearing capacity of ~~60~~35,000 psf represents the maximum bearing pressure resulting from Normal plus SSE loads. These bearing pressures envelope the foundation bearing pressures for all other standard plant building structures. MIC-03-03-00057

~~The foundation depth-to-equivalent-radius ratio for the R/B-PCCV basemat is less than 0.3, which indicates a shallow embedment foundation for purposes of SSI as defined in ASCE 4-98, Subsection 3.3.4.2 (Reference 3.8-34). SSI analyses performed for the generic soil cases consider the R/B complex common basemat and PS/B basemats as resting on the surface of the subgrade, which is located approximately 40 feet below the plant nominal ground surface elevation. The R/B complex embedment effects study is conducted by performing site-independent SSI analyses on the R/B complex lumped mass stick model using cracked concrete stiffness reduction factors in accordance with Technical Report MUAP-11007 (Reference 3.8-58). Embedment effects for site-specific applications are addressed on a site-specific basis as stated in Subsection 3.7.2.4.Embedment effects on the R/B and PCCV SSI analysis are neglected in the US-APWR standard plant design in obtaining the soil impedance functions. Therefore, the R/B-PCCV seismic models are not coupled with any subgrade or backfill material at the sides of the basemat or along the faces of below-grade exterior walls, and no credit is taken in the seismic analysis for restraint due to the presence of these materials. Subsequently, there are no explicit requirements for shear wave velocity or other material characteristics requirements for the subgrade and/or backfill materials present on the sides of the basemat and R/B below-grade exterior walls. Subsection 3.7.2.4 provides additional discussion on the SSI analysis.~~ MIC-03-03-00057 DCD_03.07.02-35

3.8.5.4.2 Analyses for Basemat Loads during Operation MIC-03-03-00066

The major seismic category I structures basemat analyses use 3-dimensional ANSYS FE models of the major seismic category I structures, which are described in Subsection 3.7.2.3. ~~Soil springs are assigned in the model to determine the interaction of the basemat with the overlying structures and with the subgrade. The model is capable of~~ MIC-03-03-00066

~~determining the possibility of uplift of the basemat from the subgrade during postulated SSE events. The vertical spring at each node in the analytical model act in compression only. The horizontal springs are active when the vertical spring is in compression and inactive when the vertical spring lifts off.~~Non-linear contact elements are used in the FE model to determine the interaction of the R/B complex basemat with the overlying structures and with the soil subgrade. The model is capable of determining the degree of uplift of the basemat from the soil subgrade in non-linear analyses. MIC-03-03-00066 MIC-03-03-00057

The three-dimensional FE model of the basemat includes the structures above the basemat and their effect on the distribution of loads on the basemat. The combined global FE model of the R/B, PCCV, ~~and containment internal structure,~~A/B, PS/Bs, and ESWPC including basemat, is presented on Figures 3.8.5-5 through 3.8.5-10. MIC-03-03-00057

The analysis considers normal and extreme environmental loads and containment pressure loads. The normal loads include dead loads and live loads. Extreme environmental loads include the SSE.

~~Dead loads are applied as inertia loads. Live loads and the SSE loads are applied as concentrated loads on the nodes. The SSE loads are applied as equivalent static loads. For the structural design of the basemat concrete and reinforcing, the three directions of the earthquake loading are combined using the Newmark 100-40-40 method. Note that this method of combination is different from that used for the structural design of the PCCV, containment internal structure, and R/B, which is the SRSS method.~~The dead loads and the SSE loads are applied as static accelerations to the nodes of the FE model. The live loads are applied to the surface of elements as static pressure. The SSE loads are applied as equivalent static loads. For the structural design of the R/B complex basemat concrete and reinforcement, the three directions of the earthquake loading are combined using the Newmark 100-40-40 method. MIC-03-03-00057

The results of the linear analysis are combined with the non-linear analyses to form the governing load combinations.~~Linear analyses are performed for all specified load combinations assuming that the soil springs can take tension. The results of the linear casesanalyses are then used to select critical load cases for non-linear analyses.~~ The results from these analyses include the forces, shears, and moments in the basemat; the bearing pressures under the basemat; and the area of the basemat that is uplifted. Minimum area of steel reinforcement is calculated from the section forces for the ~~most critical~~governing load combinations. MIC-03-03-00066 MIC-03-03-00057

~~The required reinforcement steel for the portion of the basemat under the R/B (other than PCCV) is determined by considering the reinforcement envelope for the full non-linear iteration of the most critical load combinations.~~The required reinforcement for the R/B complex basemat is determined by considering the governing load from the combined linear and non-linear analyses.

3.8.5.4.2.1 Global Three-Dimensional FE Modeling of Basemat

The stress conditions of the basemat for the R/B complex are generated by numerous types of loads from the superstructure. The modeling of the basemat therefore involves evaluating the interaction between the basemat and the superstructures to determine the

stress conditions at the interface. The global FE model is analyzed utilizing the FE computer program ANSYS (Reference 3.8-14).

~~Regarding the R/B, the element divisions in a horizontal direction inside the secondary shield walls of the containment internal structure are made in a rectangular grid pattern and those divisions outside the secondary shield wall are made in a polar pattern. Peripheral areas of the basemat, outside the thickened mat that supports the PCCV and containment internal structure are divided into a rectangular grid.~~ MIC-03-03-00057

The upper portion of tendon gallery ~~is considered with concentrated stresses created by the connection with the PCCV. This region is divided into multiple layers of elements in the radial direction to accommodate the differing concrete strengths in this area as shown schematically in Figure 3.8.5-4.~~is conservatively modeled using a concrete strength of 5,000 psi to simplify design while providing for the potential in variation of construction joints.

The ~~basemat below the PCCV and the lower portion of containment internal structure are~~R/B complex basemat is simulated with solid elements (ANSYS SOLID45 elements) that are defined by eight nodes having three degrees of freedom at each node; translations in the nodal x, y, and z directions. ~~The elements below the PCCV are divided into ten layers, and elements in peripheral areas are divided into four layers.~~The R/B complex basemat is divided into six layers in the vertical dimension for areas away from the PCCV. The area below the PCCV is divided into 12 layers in the vertical direction. The portion modeled to simulate the reactor cavity is divided into ten layers in the vertical direction.

The R/B complex basemat is modeled with element divisions in the horizontal direction in a rectangular grid pattern, in areas away from the PCCV. The element divisions in the horizontal direction within the PCCV boundaries, mainly between the primary shield wall and the secondary shield wall, are mostly in a rectangular grid pattern. The element divisions between the secondary shield wall and the PCCV exterior wall are generally in a polar grid pattern as shown in Figure 3.8.5-5.

~~The FE modeling of the PS/Bs is addressed in Subsection 3.8.4.4.~~

3.8.5.4.3 Boundary Conditions of Basemat

The basemat subgrade is included in the ~~detailed static~~ FE models used for structural design by meshing a sufficiently large volume of soil/rock below and around the basemat. MIC-03-03-00057
~~The stiffness of the backfill around the below grade walls is not considered in the model.~~For seismic load cases, the stiffness of the backfill soil is only activated along the face of the R/B complex basemat in the opposite direction of the applied earthquake load. The activation of soil stiffness allows the backfill soil to contribute compression to the exterior walls of the R/B complex basemat during the earthquake load condition. Dynamic lateral soil pressure at applicable locations was superimposed on seismic loads to account for soil–to–structure interactions. For basemat analysis, the equivalent static seismic accelerations are linearly reduced such that for each soil profile, the maximum shear produced by an earthquake in a given direction is 10% greater than the corresponding maximum shear values produced in the SSI analysis. ~~To increase computational efficiency, the subgrade part of the FE model is condensed into a super-~~ MIC-03-03-00057 DCD_03.07.02-35

~~element.~~ The backfill and side soil are modeled from elevation 2'-7" to elevation -42'-8". Backfill soil ranges from approximately 11' to 14' in width while the side soil extends from the edge of the backfill soil to the extremities of the subgrade soil. To increase computational efficiency for the non-linear analyses, the soil subgrade portion of the FE model is condensed into a super element. For all linear analyses, soil layers are modeled explicitly. The properties of the subgrade layers used in the FE model of the subgrade are established based on several profiles selected from the generic layered soil profiles described in Technical Report MUAP-1000~~1~~6 (Reference 3.7-4~~7~~8) to cover the entire range of soil/rock conditions at representative nuclear power plant sites within the central and eastern US. MIC-03-03-00057 MIC-03-03-00057 MIC-03-03-00066

3.8.5.4.4 Analyses of Settlement

~~The potential for foundation subsidence, or differential displacement, is designed for a maximum 2 in. based on enveloping properties of subsurface materials. This is a conservative allowance that may not be applicable at all plant sites. Subsidence and differential displacement may therefore be reduced to less than 2 in. if justified by the COL Applicant based on site-specific soil properties.~~ MIC-03-03-00057

~~Soil conditions for which settlement during construction is considered are identified in Chapter 2, Subsection 2.5.4. To evaluate the potential for settlement, soil conditions applicable to the US-APWR are considered to determine the enveloping design cases. Based on this assessment, soft soil sites with alternating sand and clay layers maximizes early stage settlement and impact of dewatering, while soft soil sites with clay maximize settlement in the long term. In any situation, conditions outside the boundaries of acceptable soils are removed and replaced using compatible structural fill.~~

~~The basemat FE model is analyzed for various phases of construction, including the determination of displacement. The design is completed in accordance with ASME Section III, Division 2 (Reference 3.8-2) and ACI 349-06 (Reference 3.8-8) using applicable construction load combinations and factors provided in Table 3.8.4-3. Based on these analyses, the basemat is detailed and constructed to minimize any potential differential settlement during construction.~~ MIC-03-03-00066 MIC-03-03-00057

Maximum values of total settlement, differential settlement, and tilt are calculated for design of the standard plant structures. These quantities are calculated at the end of construction and at the end of plant operating life. All settlement and tilt values calculated for the standard plant are less than the maximum allowable values presented in Table 2.0-1 of DCD Chapter 2.

Differential settlements within the same structure are defined as the maximum difference (in the vertical direction) between settlements of any two points of the basemat. The tilt induced by differential settlement, used in calculating gap closure, is a rigid body rotation conservatively calculated as the maximum differential settlement within the same structure divided by the distance between the points on the basemat where this differential settlement occurs. Differential settlements between adjacent structures are defined as the maximum difference between settlements of any two neighboring points on the basemats, each of them on one of the adjacent structures. Differential settlements between adjacent structures are important for key connections between buildings and commodities and their supports and tunnels.

The modeling and analysis procedures for settlement account for the flexibility of structures and subgrade. Settlements are calculated by 3D FE analysis using ANSYS for short term (resulting from dead loads introduced during plant construction) and long term static loads (acting over the operating life of plant). ANSYS FE models of both the R/B complex and the T/B are placed on a layered subgrade modeled by solid elements. The weight of the AC/B is the analysis (3000 ft by 2400 ft in a horizontal plane, and 960 ft in depth) is chosen to be sufficient to avoid the effects of boundary conditions on the resulting settlements. Two sets of 3D settlement analyses are performed; one for a predominantly sand site and the other for a predominantly clay site. The results of the settlement analyses indicate that soil sites composed predominantly of clay layers have the maximum total and differential settlements. The deformability properties of the subgrade layers are established to simulate immediate and time dependent deformability of natural soil materials using soil deformation properties similar to profile 270-500 (see Table 3.7.1-6), which is the most deformable subgrade profile considered for the standard plant. The subgrade layers placed 500 ft or deeper below the plant grade were assigned rock properties equivalent to the corresponding layers described in profile 270-500. The settlements obtained for the 270-500 profile envelope results for all other design-basis profiles listed in Table 3.7.1-6. MIC-03-03-00057

The timeline of loading considered in the standard plant settlement analyses is illustrated in Figure 3.8.5-14. Subgrade settlements consist of immediate settlements that occur at load application and are elastic-plastic, and time-dependent settlements that develop in time under constant load (viscous deformations, primary consolidation settlements). All immediate settlements and most of the time-dependent settlements will occur by the time of completion of construction. To capture the relatively complex nonlinear and time-dependent behavior with a linear elastic numerical model, the soil deformation moduli used in the model are calculated as equivalent elastic secant moduli at two significant points in time: end of construction and end of plant life. The secant moduli are calculated based on primary consolidation theory and viscous deformation analysis. These secant moduli are determined in an iterative process from the condition that the average settlements of each structure at end of life and end of construction obtained from the linear analyses are approximately equal to the corresponding settlements that account for time dependent deformability and are produced after a time T_C (for the construction phase) and after a time T_L (for the entire life of the plant). As illustrated symbolically in Figure 3.8.5-15, total deformations at end of construction at every location in each structure and the subgrade, δ_{EoC}, are calculated using secant moduli at end of construction, E_{EoC}, and loading during the construction phase. Similarly, the total deformations at end of life at every location, δ_{EoL}, are calculated in a separate 3D FE analysis using secant moduli at end of life, E_{EoL}, and loading during the plant operational life. The deformations produced during the operation life of the plant are obtained as the difference: $\delta_{EoL} - \delta_{EoC}$.

The loads considered in the settlement analyses are as follows:

- Dead Loads (D), introduced during construction and present throughout the operating life of the plant, are assumed to increase linearly from zero at the beginning of the construction period to their nominal value at end of construction.

- Live Loads (L), assumed to act with 25% of their maximum intensity considered for structural design (i.e., long term values), during the operational life of the plant. MIC-03-03-00057
- Weight of the backfill (B) placed around the structures and acting during the operational life of the plant.
- Heave produced by stress reduction due to excavation that reduces settlements for clay soils (materials with large time-dependent deformations), and is accounted for by calculating an equivalent reduction in loads, where heave is applicable.
- Groundwater level and the resulting buoyant loads on the structure tend to reduce settlement. For the purpose of settlement calculations, the groundwater level has been conservatively assumed to be below the basemat elevation.

Early stages of basemat construction are most vulnerable to differential loading and deformations. The construction of the basemat is anticipated to be a continuous concrete placement. The differential settlement is susceptible immediately following the concrete placement when the ratio of the slab depth to length is very small. Measures to prevent settlement are implemented by dewatering the excavation pit and maintaining it dry during basemat placement, curing, and construction of exterior walls.

In the event of suspended or sequenced construction, the basemat may remain unstiffened by the lack of shear walls for extended periods. Differential stresses in the basemat are also possible based on construction sequence, such as tension maximized on the top of the basemat due to the placement of foundation walls along the edge without additional mass and shear walls in the center of the basemat. The design of the basemat is sufficiently reinforced to control both compressive and tensile stresses until such time as the concrete placement of basemat walls and containment internal structure are completed. Therefore, the potential for differential settlement is controlled during alternative construction scenarios, until the basemat is stiffened by transverse shear walls.

Actual total and differential settlements are dependent on site-specific conditions (e.g., soil variability, construction sequence and schedule (including basemat stiffening), loading conditions, excavation plans, and dewatering plans). The COL Applicant is to perform settlement analysis for the specific site, the in-situ soil properties, and for the specific construction schedule to verify that the site-specific total and differential settlements, and tilt, are bounded by the settlements and tilt in Table 2.0-1 of Chapter 2. If the site-specific settlements and tilt are bounded by the values in Table 2.0-1, detailed site-specific stress and gap closure verifications are not required with regard to settlement and tilt effects. MIC-03-03-00057

3.8.5.4.5 Verification of ~~Critical~~Typical Sections

The basemat is designed to meet the acceptance criteria presented in Subsection 3.8.5.5. For the R/B complex basemat, Table 3.8.5-4 provides sectional thickness and reinforcement steel to concrete ratio ~~of basemat~~ used in the evaluation. ~~Table 3.8.5-5 provides sectional thickness and reinforcement ratio of basemat used in the PS/B~~ MIC-03-03-00057

~~evaluation.~~ Figures 3.8.5-11 and 3.8.5-12 show the ~~R/B-PCCV containment internal structure~~ basemat reinforcement arrangement of SECTION N-S and SECTION E-W, respectively. The basemat reinforcement arrangement ~~of the PS/Bs~~in typical peripheral areas is detailed on Figure 3.8.5-13. ~~The orientation of the PS/B SECTION N-S and SECTION E-W are reflected on Figure 3.8.4-11.~~ MIC-03-03-00057

3.8.5.4.6 Design Report

A Design Report prepared in accordance with guidance from Appendix C to SRP 3.8.4 provides design and construction information more specific than that contained within this DCD. The Design Report information quantitatively presents the actual design computations and the final design results. In addition, the Design Report provides criteria for reconciliation between design and as-built conditions.

3.8.5.5 Structural Acceptance Criteria

Structural acceptance criteria are discussed in detail in Subsections 3.8.1.5 and 3.8.4.5. The design soil conditions are as provided in Section 2.5~~, and the site-specific COL is to assure the design criteria listed in Chapter 2, Table 2.0-1 is met or exceeded~~ and Subsection 3.7.1.3. The COL Applicant is to ensure that the design parameters listed in Chapter 2, Table 2.0-1, envelope the site-specific conditions. MIC-03-03-00057

~~Other load combinations applicable to the design of each seismic category I structure basemat include acceptance criteria for overturning, sliding, and flotation as detailed in Table 3.8.5-1. The factor of safety to each design load combination is calculated as indicated below, and compared to the minimum factors to assure stability of the building basemats.~~Seismic category I and II structures are evaluated against acceptance criteria with respect to overturning, sliding, and flotation stability. The load combinations applicable to the stability evaluations are specified in Table 3.8.5-1. For each of the specified load combinations, the acceptance criterion for the overturning, sliding, and flotation stability evaluations is the minimum factor of safety identified in Table 3.8.5-1. The design methodology and requirements for calculating the factors of safety are described further in Subsections 3.8.5.5 below. The minimum calculated factor of safety for each load combination considered in the stability evaluations is presented in Table 3.8.5-6. Site-specific stability evaluations are required to be performed by the COL Applicant for standard plant seismic category I and II structures to confirm the minimum required values in Table 3.8.5-1, unless the COL Applicant can demonstrate that the site specific conditions for evaluating stability are enveloped by the standard plant design. The COL Applicant is to also provide the factors of safety for site-specific seismic category I structures in Table 3.8.5-6 based on the methodology and acceptance criteria presented in Subsection 3.8.5.5. DCD_03.07.02-35 MIC-03-03-00057

~~Technical Report MUAP-11007 (Reference 3.8-58) describes the methodology used to perform R/B complex, PS/B, A/B structure sliding and overturning stability studies for various soil conditions, including the effects of dead load and buoyancy. Dynamic FE and lumped mass stick models of the structures are used in these studies (see Appendix 3H for lumped mass stick model methodology.) SSE ground motion is applied in three orhogonal directions simultaneously. Soil bearing pressure demands at the toe of the basemat are also calculated.~~ DCD_03.07.02-35 MIC-03-03-00066 MIC-03-03-00057

~~R/B complex stability is analyzed by post-processing SSI time-history responses obtained from ACS SASSI analyses and by calculating the factor of safety against possible modes of failure. Ground water level is one foot below finished plant grade and the minimum design safety factors against sliding and overturning are 1.1. Soil bearing pressures are calculated for the combined effects of dead weight, buoyancy, and SSE earthquake loads at each corner of the respective basemat foundations. The basemats are considerd rigid. Soil pressure variation is thus assumed to remain linear. Uplift possibility is investigate at each time step by determining reduction in contact area due to time varying axial force and biaxial moments.~~ MIC-03-03-00057

~~*Result of Sliding and Overturning Stability Studies*—Results of sliding and overturning analyses determine a factor of safety against sliding and overturning that is >1.1 to ensure stability of the seismic Category I structures.~~

3.8.5.5.1 Overturning Acceptance Criteria

The factor of safety against overturning is identified as the ratio of the moment resisting overturning (M_r) divided by the overturning moment (M_o). ~~For SSE load cases, M_o is the maximum moment from the time history analyses of the applicable structure's lumped mass stick model in accordance with Section 3.7.~~ Therefore, MIC-03-03-00057

FS_o = [M_r / M_o] , not less than FS_{ot} as determined from Table 3.8.5-1.

where

FS_o = Structure factor of safety against overturning by the maximum design basis wind, tornado, hurricane, or earthquake load. DCD_02-03 S01

M_r = Resisting moment ~~determined as~~provided by the dead load of the structure, minus the MIC-03-03-00057

buoyant force created by the design ground water table.~~, multiplied by the distance from the structure edge to the structure center of gravity provided there is no overstress at the structure's edge.~~Passive earth pressure is not considered for overturning stability. MIC-03-03-00057

M_o = Overturning moment caused by the maximum design basis wind, tornado, hurricane or earthquake load. DCD_02-03 S01

The calculated minimum factors of safety presented in Table 3.8.5-6 show that the SSE load combination governs over wind and tornado load combinations for evaluating overturning stability. The standard plant SSE overturning stability evaluations are performed using the dynamic FE models and the seismic driving forces/moments obtained from the site independent SSI analyses. The SSI analyses are conducted separately for each earthquake direction. The earthquake responses from the separate SSI analyses are then applied simultaneously to evaluate overturning stability. The SSE overturning stability analyses, which are based on loads/masses extracted from the SSI analyses, include 25% of the live load in calculating both the resisting moment and the overturning moment. The presence of live loads has insignificant effect on the calculated overturning factor of safety because live loads make up an insignificant portion of the MIC-03-03-00057

mass considered. Further, even though live loads have a stabilizing effect by increasing the overturning resisting moment, they increase the overturning moment. Therefore, the effects of live loads on overturning stability are insignificant. MIC-03-03-00057

Unbalanced lateral earth pressures are included in the analyses. This means that the overturning stability analysis considers the contribution of static soil pressure (at-rest lateral earth pressure), lateral earth pressure due to surcharge of 450 psf, and dynamic (Wood's) pressure acting in the same direction of the horizontal inertia forces on the below-grade walls and basemat, but conservatively considers only static at-rest pressure in resisting overturning loads. This is conservative because any passive reaction forces acting on the side walls and basemat below grade will reduce the global overturning effects during the stability analysis. Soil pressures acting on the below grade side walls and basemat are considered for the strength design as discussed in Subsection 3.8.4.4. The effects of basemat uplift are included at every time step by determining the reduction in contact area due to the time varying vertical force (up or down) and moments. The overturning safety factors are calculated at each time step of the design earthquake excitation as the ratio between the resisting moments and the driving/overturning moments. The minimum value of the safety factor during the total duration of the earthquake for any of the design soil conditions is reported in Table 3.8.5-6.

3.8.5.5.2 Sliding Acceptance Criteria

The factor of safety against sliding caused by wind ~~or~~, tornado or hurricane is identified by the ratio: MIC-03-03-00057

FS_{sw} = [F_s ~~+ F_p~~] / F_h , not less than FS_{sl} as determined from Table 3.8.5-1, MIC-03-03-00057

where

FS_{sw} = Structure factor of safety against sliding caused by wind ~~or~~, tornado or hurricane DCD_02-03 S01

F_s = Shear (or sliding) resistance along bottom of structure basemat. No credit is taken for side wall friction or passive soil pressure in calculating the factor of safety against sliding in standard plant building structures. MIC-03-03-00057

~~F_p = Resistance due to maximum passive soil pressure, neglecting any contribution of surcharge. No credit is taken for passive soil pressure in calculating the factor of safety against sliding in standard plant building structures.~~

F_h = Lateral force due to active soil pressure, including surcharge, and tornado, hurricane or wind load, as applicable DCD_02-03 S01

The factor of safety against sliding caused by earthquake is identified by the ratio:

FS_{se} = [F_s ~~+ F_p~~] / [F_d + F_h], not less than FS_{sl} as determined from Table 3.8.5-1, unless resulting sliding displacements are evaluated for design acceptability. MIC-03-03-00057

where

FS_{se} = Structure factor of safety against sliding caused by earthquake

F_s = Shear (or sliding) resistance along bottom of structure basemat. No credit is taken for side wall friction or passive soil pressure in calculating the factor of safety against sliding in standard plant building structures. MIC-03-03-00057

~~F_p = Resistance due to maximum passive soil pressure, neglecting any contribution of surcharge. No credit is taken for passive soil pressure in calculating the factor of safety against sliding in standard plant building structures.~~

F_d = Dynamic lateral force, including dynamic ~~active~~ earth pressures caused by seismic loads

F_h = ~~Lateral force due to all loads except~~Other lateral forces concurrent with seismic loads MIC-03-03-00057

~~When a coefficient of friction of 0.7 is used in calculating sliding resistance F_s, roughening of fill concrete is required per criteria given in Section 11.7.9 of ACI 349 (Reference 3.8-8). If a coefficient of friction of less than 0.7 is used by the COL Applicant, roughening of fill concrete is not required.~~The factor of safety against sliding caused by earthquake, FS_{SE}, was calculated as shown above using a linear time history approach. This pseudo-static FS_{SE} resulted less than 1.1 during short time intervals. It was therefore decided to perform seismic sliding evaluations for the R/B complex and the T/B structures using nonlinear time history analysis that is more realistic than the pseudo-static approach. MIC-03-03-00057

The maximum expected seismic induced sliding for the R/B complex and the T/B resulted 0.75 in and 0.2 in, respectively [see Section 6 of Technical Report MUAP-12002 (Reference 3.8-82). The design of all aspects related to interaction between adjacent structures and components (namely: structural gaps, structural connections, such as buried tunnels and other umbilicals, buried commodities) will accommodate the displacements corresponding to the maximum expected sliding, and therefore, safety and functionality of the plant is not affected by seismic induced sliding. The nonlinear sliding analysis method and the results are documented in MUAP-12002 (Reference 3.8-82). The main features of the methodology are summarized as follows:

- Three-dimensional nonlinear time history sliding analyses are performed, including seismic acceleration input in two orthogonal horizontal directions and in the vertical direction, and also rocking.
- The nonlinear sliding analyses are performed with the 3D FE model used for SSI analyses that accurately represents the dynamic characteristics of the structure.
- Sliding analyses are performed for all six generic layered subgrade profiles that envelope the range of soil and rock properties at the sites considered for the US-APWR standard plant. Both cracked and uncracked concrete section properties are considered for the structures analyzed. For the T/B, it was demonstrated that

the uncracked section clearly dominates sliding (Section 5.3.2.3 of MUAP-12002, Reference 3.8-82). Therefore the T/B with cracked section was not analyzed for all cases. MIC-03-03-00057

- Five sets of acceleration time histories are used for each subgrade profile and each set of concrete section properties. The acceleration time histories for nonlinear sliding analysis are developed to be compatible with the CSDRS at 5% damping and in compliance with SRP 3.7.1, Acceptance Criteria II.1.B, Option 2, following the Criteria in Section II.1.B, Option 1, Approach 1, and Option 1, Aproach 2, Paragraph (a).

- The acceleration input motion applied at the foundation of the 3D FE model is developed from the response of linear SSI analyses. It is demonstrated that minimal sliding that occurs does not significantly affect the seismic input motion taken from the SSI analyses that assume perfect bonding between structure and subgrade.

- All input motions to sliding analyses were amplified by a factor of 1.1. This is a conservative amplification factor as discussed in Section 6.3 of Technical Report MUAP-12002 (Reference 3.8-82).

- Sliding and uplift between structure and subgrade are simulated by the mathematical model by using no-tension contact elements with Coulomb friction at the basemat-subgrade interface. The friction coefficient at the interface is 0.5. This is the value of the kinetic friction coefficient determined based on the results of a large number of laboratory and large scale tests available in literature to conservatively envelope all types of subgrade materials considered for the US-APWR standard plant design. This kinetic friction coefficient is conservatively used throughout the nonlinear sliding analyses for both sliding and non-sliding phases.

- The nonlinear sliding analyses are based on loads used in the SSI analyses and therefore include 25% of live loads. As demonstrated in Appendix B of Technical Report MUAP-12002 (Reference 3.8-82), the effects of live loads on sliding analysis results are insignificant.

- Buoyant forces corresponding to a maximum groundwater level at one foot below plant grade are conservatively considered in the sliding analysis.

- No credit is taken for side wall friction or passive soil resistance.

- The results are processed in terms of the absolute maximum sliding in each run. The resulting sliding displacement is calculated separately for soil profiles (270-500, 270-200 and 560-500) and for rock profiles (900-200, 900-100 and 2032-100). The sliding for each type of subgrade (soil or rock) is the envelope of two results: maximum value in each sample - from all acceleration time histories, and the maximum expected value with probability of 2.5% of being exceeded. The net sliding values are once more enveloped over both subgrade types to obtain the

maximum expected sliding for the Standard Plant, as discussed in Section 6.3 of Technical Report MUAP-12002 (Reference 3.8-82). MIC-03-03-00057

Nonlinear sliding analysis was performed with the FE model used in SSI analyses (Dynamic FE model), for both the R/B complex and the T/B. The Dynamic FE model was modified for sliding (and termed "FE model") as described in Technical Report MUAP-12002. Two lump mass stick models were developed for the R/B complex (one for the cracked section and one for the uncracked section properties) and used for screening the most representative cases to be analyzed with the FE model. These lump mass stick models were also used for a series of sensitivity analyses described in Appendix B of the Technical Report. All sliding analyses for the T/B were performed using the FE model and therefore no lump mass stick model was developed for this structure.

The development and calibration of the lump mass stick model for the R/B complex are presented in Appendix A of Technical Report MUAP-12002. The lump mass stick model was calibrated based on the FE model by matching the dynamic properties, and was subsequently fine tuned and validated by comparing the calculated maximum sliding obtained with the LMSM with the corresponding values calculated with the FE model. Further verifications were performed on (1) comparison of overall seismic demands, and (2) comparisons of base reactions between the lump mass stick model with fixed base and the FE model used in the SSI analyses. These lump mass stick models are used for screening and are validated only for sliding analyses. The lump mass stick models are not appropriate for inferring any structural responses other than seismic induced sliding.

The standard plant non-linear sliding stability calculations use a friction coefficient of 0.5, which is a kinetic coefficient of friction. To ensure an adequate friction coefficient is achieved, the following requirements apply to the subgrade conditions at the plant site:

- A minimum 35° internal friction angle is required for natural (in-situ) or engineered granular soil materials
- Fine-grained materials i.e., silts and clays classified as ML, CL, MH, CH in the Unified Soil Classification System within 6 inches of the bottom of the basemat or fill concrete, if used, are removed and replaced with engineered compacted fill having a minimum 35° internal friction angle
- At basemat or mud mat interfaces with rock, the rock surface must be cleaned, with fissures and fractures filled in, as specified in a construction specification.
- The interface between the basemat concrete and the top surface of the mud mat must be clean and free of laitance. When a coefficient of friction > 0.6 is used in calculating sliding resistance F_S, roughening of mud mat is required per criteria given in Section 11.7.9 of ACI 349-06 (Reference 3.8-8). If a coefficient of friction ≤ 0.6 is used by the COL Applicant in a pseudo-static sliding stability analysis, roughening of mud mat is not required.

Unless the COL Applicant can demonstrate by means of pseudo-static analysis that seismic induced sliding does not occur and that a safety factor against sliding ≥ 1.1 is achieved, site-specific seismic sliding stability analyses is to be performed using the

seismic sliding stability analysis methodology described in Technical Report MUAP-12002 (Reference 3.8-82). If non-linear sliding analysis is performed, the COL Applicant is to demonstrate that resulting sliding is ≤ 0.75 in. for the R/B complex and ≤ 0.20 for the T/B. MIC-03-03-00057

3.8.5.5.3 Flotation Acceptance Criteria

The factor of safety against flotation is identified as the ratio of the total dead load of the structure including ~~foundation~~basemat (D_r) divided by the buoyant force (F_b). Therefore, MIC-03-03-00057

$FS_f = D_r / F_b$, not less than FS_{fl} as determined from Table 3.8.5-1.

where

FS_f = Structure factor of safety against flotation by the maximum design basis flood or ground water table.

D_r = Total dead load of the structure including ~~foundation~~basemat. MIC-03-03-00057

F_b = Buoyant force caused by the design basis flood or high ground water table, whichever is greater.

3.8.5.6 Materials, Quality Control, and Special Construction Techniques

Subsection 3.8.4.6 describes the materials, quality control, and special construction techniques applicable to seismic category I ~~foundations~~basemats, including water control structures and below-grade concrete walls and ~~foundations~~basemat. Subsection 3.8.1.7 provides testing and surveillance requirements relating to the ~~PCCV~~R/B complex basemat. MIC-03-03-00057

3.8.5.7 Testing and Inservice Inspection Requirements

Subsection 3.8.4.7 identifies the testing and inservice surveillances applicable to seismic category I basemats, including water control structures and below-grade concrete walls and basemats. Subsection 3.8.1.7 also identifies testing and surveillance requirements relating to ~~the PCCV basemat.~~concrete crack observations of the R/B complex basemat. Monitoring and maintenance of seismic category I basemats is performed in accordance with RG 1.160 (Reference 3.8-30) to ensure that design basis assumptions and margins are not unacceptably degraded. MIC-03-03-00057

3.8.5.7.1 Construction Inspection

Inspection relating to the construction of seismic category I structures is in accordance with the codes applicable to the construction activities and/or materials. Subsection 3.8.4.7 contains a discussion of construction inspection requirements.

3.8.6 Combined License Information

COL 3.8(1) *Deleted*

COL 3.8(17) *Deleted*

COL 3.8(18) *Deleted*

COL 3.8(19) *The design and analysis of the ESWPT, UHSRS, PSFSVs, and other site-specific structures are to be provided by the COL Applicant based on site-specific seismic criteria.*

COL 3.8(20) *The COL Applicant is to identify any applicable externally generated loads. Such site-specific loads include those induced by floods, potential non-terrorism related aircraft crashes, explosive hazards in proximity to the site, and projectiles and missiles generated from activities of nearby military installations.*

COL 3.8(21) *Deleted*

COL 3.8(22) *The COL Applicant is to establish a site-specific program for monitoring and maintenance of seismic category I structures in accordance with the requirements of NUMARC 93-01 (Reference 3.8-28) and 10 CFR 50.65 (Reference 3.8-29) as detailed in RG 1.160 (Reference 3.8-30). For seismic category I structures, monitoring is to include base settlements and differential displacements.*

COL 3.8(23) *The COL Applicant is to determine if the site-specific zone of maximum frost penetration extends below the depth of the basemats for the standard plant, and to pour ~~fill concrete~~a mud mat under any basemat above the frost line so that the bottom of ~~fill concrete~~mud mat is below the maximum frost penetration level.* MIC-03-03-00057

COL 3.8(24) *Other non-standard seismic category I buildings and structures of the US-APWR are designed by the COL Applicant based on site-specific subgrade conditions.*

COL 3.8(25) *~~The site-specific COL are to assure the design criteria listed in Chapter 2, Table 2.0-1, is met or exceeded.~~The COL Applicant is to ensure that the design parameters listed in Chapter 2, Table 2.0-1, envelope the site-specific conditions.* MIC-03-03-00057

COL 3.8(26) ~~*Subsidence and differential displacement may therefore be reduced to less than 2 in. if justified by the COL Applicant based on site specific soil properties.*~~*Actual total and differential settlements are dependent on site-specific conditions (e.g., soil variability, construction sequence and schedule (including basemat stiffening), loading conditions, excavation plans, and dewatering plans). The COL Applicant is to perform settlement analysis for the specific site, the in-situ soil properties, and for the specific construction schedule to verify that the site-specific total and differential settlements, and tilt, are bounded by the settlements and tilt in Table 2.0-1 of Chapter 2. If the site-specific settlements and tilt are bounded by the values in Table 2.0-1, detailed site-specific stress and gap closure verifications are not required with regard to settlement and tilt effects.* MIC-03-03-00057

COL 3.8(27) *The COL Applicant is to specify normal operating thermal loads for site-specific structures, as applicable.*

COL 3.8(28) *The COL Applicant is to specify concrete strength utilized in non-standard plant seismic category I structures.*

COL 3.8(29) *The COL Applicant is to provide design and analysis procedures for the ESWPT, UHSRS, and PSFSVs.*

COL 3.8(30) *When a coefficient of friction of* $\geq 0.$~~*7*~~*6 is used in calculating sliding resistance* F_s*, roughening of* ~~*fill concrete*~~*mud mat is required per criteria given in Section 11.7.9 of ACI 349-06 (Reference 3.8-8). If a coefficient of friction* ~~*of less than 0.7*~~≤ 0.6 *is used by the COL Applicant in a pseudo-static sliding stability analysis, roughening of* ~~*fill concrete*~~*mud mat is not required.* MIC-03-03-00057 MIC-03-03-00066

COL 3.8(31) *Site-specific stability evaluations are required to be performed by the COL Applicant for standard plant seismic category I and II structures to confirm the minimum required values in Table 3.8.5-1, unless the COL Applicant can demonstrate that the site-specific conditions for evaluating stability are enveloped by the standard plant design. The COL Applicant is to also provide the factors of safety for site-specific seismic category I structures in Table 3.8.5-6 based on the methodology and acceptance criteria presented in Subsection 3.8.5.5.* MIC-03-03-00057

COL 3.8(32) *Unless the COL Applicant can demonstrate by means of pseudo-static analysis that seismic induced sliding does not occur and that a safety factor against sliding* ≥ 1.1 *is achieved, site-specific seismic sliding stability analyses is to be performed using the seismic sliding stability analysis methodology described in Technical Report MUAP-12002 (Reference 3.8-82). If non-linear sliding analysis is performed, the COL Applicant is to demonstrate that resulting sliding is* ≤ 0.75 *in. for the R/B complex and* ≤ 0.20 *for the T/B.* MIC-03-03-00057

COL 3.8(33) *The COL applicant is to provide detailed construction and inspection plans and documents in accordance with MUAP-12006.* MIC-03-03-00057

COL 3.8(34) *The COL Applicant is to verify that lateral earth pressures used in the standard plant design envelope site-specific lateral earth pressures.* MIC-03-03-00057

3.8.7 References

3.8-1 Combined License Applications for Nuclear Power Plants, RG 1.206, Rev. 0, U.S. Nuclear Regulatory Commission, Washington, DC, June 2007.

3.8-2 Rules for Construction of Nuclear Facility Components, Division 2, Concrete Containments. Section III, American Society of Mechanical Engineers, 2001 Edition through the 2003 Addenda (hereafter referred to as ASME Code).

3.8-3 Design Limits, Loading Combinations, Materials, Construction, and Testing of Concrete Containments. RG 1.136, Rev. 3, U.S. Nuclear Regulatory Commission, Washington, DC, March 2007.

3.8-4 Rules for Inservice Inspection of Nuclear Power Plant Components. Section XI, American Society of Mechanical Engineers, 2001 Edition through the 2003 Addenda.

3.8-5 Inservice Inspection of Ungrouted Tendons in Pre-stressed Concrete Containments. RG 1.35, Rev. 3, U.S. Nuclear Regulatory Commission, Washington, DC, July 1990. MIC-03-03-00057

3.8-6 Determining Pre-stressing Forces for Inspection of Pre-stressed Concrete Containments. RG 1.35.1, U.S. Nuclear Regulatory Commission, Washington, DC, July 1990. MIC-03-03-00057

3.8-7 Concrete Containment, ~~Design of Structures, Components, Equipment, and Systems,~~ Standard Review Plan for the Review of Safety Analysis Reports for Nuclear Power Plants. NUREG-0800 SRP 3.8.1, U.S. Nuclear Regulatory Commission, Washington, DC, March 2007. MIC-03-03-00057

3.8-8 ~~Code Requirements for Nuclear Safety-Related Concrete Structures. ACI 349-01, American Concrete Institute, 2001.~~Code Requirements for Nuclear Safety-Related Concrete Structures (ACI 349-06) and Commentary, American Concrete Institute, 2006. MIC-03-03-00066

3.8-9 Specification for the Design, Fabrication and Erection of Steel Safety-Related Structures for Nuclear Facilities, ANSI/AISC N690-1994 including Supplement 2 (2004), American National Standards Institute/American Institute of Steel Construction, 1994 & 2004.

3.8-10 Combustible Gas Control for Nuclear Power Reactors, Domestic Licensing of Production and Utilization Facilities, Energy. Title 10 Code of Federal Regulations Part 50.44, U.S. Nuclear Regulatory Commission, Washington, DC, January 1, 2007.

3.8-11 Control of Combustible Gas Concentrations in Containment, Regulatory Guide 1.7, Rev. 3, U.S. Nuclear Regulatory Commission, Washington, DC, March 2007.

3.8-12 Policy, Technical, and Licensing Issues Pertaining to Evolutionary and Advanced Light-Water Reactor (ALWR) Designs. SECY-93-087, U.S. Nuclear Regulatory Commission, Washington, DC, April 2, 1993.

3.8-13 Deleted.

3.8-14 ANSYS, Advanced Analysis Techniques Guide, Release 1~~1~~3.0, ANSYS, Inc., 201~~0~~7. MIC-03-03-00057

3.8-15 Johnson, T.E. Testing of Large Pre-stressing Tendon End Anchor Anchorage Regions. International Conference on Experience in the Design, Construction and Operation of Pre-stressed Concrete Pressure Vessels and Containments for Nuclear Reactors, University of York, England, 8-12 September 1975.

3.8-16 Deleted.

3.8-17 Containment Building Liner Plate Design Report, BC-TOP-1, Rev. 1, December 1972, Bechtel Corporation, San Francisco, California.

3.8-18 Primary Reactor Containment Leakage Testing for Water-Cooled Power Reactors, Domestic Licensing of Production and Utilization Facilities, Energy. Title 10 Code of Federal Regulations Part 50, Appendix J, U.S. Nuclear Regulatory Commission, Washington, DC.

3.8-19 Safety-Related Concrete Structures for Nuclear Power Plants (Other Than Reactor Vessels and Containments), Regulatory Guide 1.142, Rev. 2, U.S. Nuclear Regulatory Commission, Washington, DC, November 2001.

3.8-20 Concrete Radiation Shields for Nuclear Power Plants. Regulatory Guide 1.69, U.S. Nuclear Regulatory Commission, Washington, DC, December 1973.

3.8-21 ~~Tsuda, K., Nakayama, T., Eto, H., Akiyama, K., Shimizu, A., Tanouchi, K., Aoyama, H., Experimental Study on Steel Plate Reinforced Concrete Shear Walls with Joint Bars, 16th International Conference on Structural Mechanics in Reactor Technology, 2001.~~Deleted. MIC-03-03-00057

3.8-22 ~~Akiyama, H., Sekimoto, H., Fukihara, M., Nakanashi, K., and Hara, K. A Compression and Shear Loading Test of Concrete Filled Steel Bearing Wall. 11th International Conference on Structural Mechanics in Reactor Technology, 1991.~~Deleted.

3.8-23 ~~Ohno, F., Shioya, T., Nagasawa, Y., Matsumoto, G., Okada, T., and Ota, T. Experimental Studies on Composite Members for Arctic Offshore Structures, Steel/Concrete Composite Structural Systems, C-FER Publication No. 1, Proceedings of a special symposium held in conjunction with POAC '87,~~

~~Fairbanks, Alaska, 9th International Conference on Port and Ocean Engineering under Arctic Conditions, 1987.~~Deleted.

MIC-03-03-00057

3.8-24 ~~Matsuishi, M. and Iwata, S. Strength of Composite System Ice Resisting Structures, Steel/Concrete Composite Structural Systems. C-FER Publication No. 1, Proceedings of a special symposium held in conjunction with POAC '87, Fairbanks, Alaska, 9th International Conference on Port and Ocean Engineering under Arctic Conditions, 1987.~~Deleted.

3.8-25 ~~Adams, P. F. and Zimmerman, T. J. E. Design and Behaviour of Composite Ice Resisting Walls, Steel/Concrete Composite Structural Systems. C-FER Publication No. 1, Proceedings of a special symposium held in conjunction with POAC '87, Fairbanks, Alaska, 9th International Conference on Port and Ocean Engineering under Arctic Conditions, 1987.~~Deleted.

3.8-26 ~~O'Flynn, B. and MacGregor, J. G. Tests on Composite Ice Resisting Walls, Steel/Concrete Composite Structural Systems, C-FER Publication No. 1, Proceedings of a special symposium held in conjunction with POAC '87, Fairbanks, Alaska, 9th International Conference on Port and Ocean Engineering under Arctic Conditions, 1987.~~Deleted.

3.8-27 ~~Akiyama, H., Sekimoto, H., Tanaka, M., Inoue, K., Fukihara, M., and Okuda, Y. 1/10th Scale Model Test of Inner Concrete Structure Composed of Concrete Filled Steel Bearing Wall. 10th International Conference on Structural Mechanics in Reactor Technology, 1989.~~Deleted.

3.8-28 Industry Guideline for Monitoring the Effectiveness of Maintenance at Nuclear Power Plants. NUMARC 93-01, Rev. 2, Nuclear Energy Institute, April 1996.

3.8-29 Requirements for Monitoring the Effectiveness of Maintenance at Nuclear Power Plants, Domestic Licensing of Production and Utilization Facilities, Energy. Title 10 Code of Federal Regulations Part 50.65, U.S. Nuclear Regulatory Commission, Washington, DC, January 1, 2007.

3.8-30 Monitoring the Effectiveness of Maintenance at Nuclear Power Plants, RG 1.160, Rev. 2, U.S. Nuclear Regulatory Commission, Washington, DC, March 1997.

3.8-31 Visual Weld Acceptance Criteria: Volume 1, Visual Weld Acceptance Criteria for Structural Welding at Nuclear Power Plants, NCIG-01, Rev. 3, Nuclear Construction Issues Group/Electric Power Research Institute, July 28, 1999.

3.8-32 Deleted.

3.8-33 Design Criteria for an Independent Spent Fuel Storage Installation (Water Pool Type), ANSI/ANS-57.7, American National Standards Institute/American Nuclear Society, 1997.

3.8-34 Seismic Analysis of Safety Related Nuclear Structures and Commentary on Seismic Analysis of Safety Related Nuclear Structures, ASCE Standard 4-98, American Society of Civil Engineers, 1998.

3.8-35 Minimum Design Loads for Buildings and Other Structures. ASCE 7-05, American Society of Civil Engineers, 2005.

3.8-36 Design Loads on Structures During Construction. ASCE 37-02, American Society of Civil Engineers, 2002.

3.8-37 Quality Assurance Requirements for Nuclear Power Plants. ASME NQA-2-1983, with ASME NQA-2a-1985 addenda to ASME NQA-2-1983, American Society of Mechanical Engineers, 1983.

3.8-38 Specification for the Design of Cold-Formed Steel Members. 1996 Edition and Supplement No 1, American Iron and Steel Institute, July 30, 1999.

3.8-39 Guide for Measuring, Mixing, Transporting, and Placing Concrete. ACI-304R, American Concrete Institute, 2000.

3.8-40 Other Seismic Category I Structures, Standard Review Plan for the Review of Safety Analysis Reports for Nuclear Power Plants. NUREG-0800 SRP Section 3.8.4, Rev. 2, U.S. Nuclear Regulatory Commission, Washington, DC, March, 2007.

3.8-41 Anchoring Components and Structural Supports in Concrete, RG 1.199, Rev. 0, U.S. Nuclear Regulatory Commission, November 2003.

3.8-42 Standard Specification for Ready-Mixed Concrete, C94-0~~7~~4, American ~~Standards~~Society for Testing and Materials~~ (ASTM)~~, 200~~7~~4. MIC-03-03-00057

3.8-43 Standard Specification for Portland Cement, C150-0~~7~~4a, Type II, American Society ~~of~~for Testing and Materials, 2004.

3.8-44 Standard Specification for Concrete Aggregates, C33-03, ~~ASTM~~American Society for Testing and Materials, 2003.

3.8-45 DOD Preferred Methods for Acceptance of Product, MIL-STD-1916, Department of Defense Test Method Standard, April 1, 1996.

3.8-46 Structural Welding Code – Reinforcing Steel, D1.4, American Welding Society, 2005.

3.8-47 Inspection of Water-Control Structures Associated with Nuclear Power Plants, RG 1.127, Rev. 1, U.S. Nuclear Regulatory Commission, March 1978.

3.8-48 Rules for Construction of Nuclear Facility Components, Division 1, Section III, American Society of Mechanical Engineers, 2001 Edition through the 2003 Addenda.

3.8-49 Evaluations of Explosions Postulated to Occur on Transportation Routes Near Nuclear Power Plants, RG 1.91, Rev. 1, U.S. Nuclear Regulatory Commission, Washington, DC, February 1978.

3.8-50 Protection Against Low-Trajectory Turbine Missiles, RG 1.115, Rev. 1, U.S. Nuclear Regulatory Commission, Washington, DC, July 1977.

3.8-51 Design Guidance for Radioactive Waste Management Systems, Structures, and Components Installed in Light-Water-Cooled Nuclear Power Plants, RG 1.143, Rev. 2, U.S. Nuclear Regulatory Commission, Washington, DC, November 2001.

3.8-52 Report on Thermal and Volume Change Effects on Cracking of Mass Concrete. ACI-207.2R, American Concrete Institute, 2007.

3.8-53 Cooling and Insulating Systems for Mass Concrete. ACI-207.4R, American Concrete Institute, 2005.

3.8-54 Control of Cracking in Concrete Structures. ACI-224R, American Concrete Institute, 2001.

3.8-55 US-APWR Containment Performance for Pressure Loads, MUAP-10018, Mitsubishi Heavy Industries, Ltd, June, 2010.

3.8-56 ~~Dameron, R. A., Zhang, L., Rashid, Y. R., Vargas, M. S., Pretest Analysis of a 1:4 Scale Prestressed Concrete Containment Vessel Model, NUREG/CR-6685, U. S. Nuclear Regulatory Commission, Washington, D. C., October 2000.~~Deleted. MIC-03-03-00057

3.8-57 ~~Dameron, R. A., Hansen, B. E., Parker, D. R., Rashid, Y. R., Posttest Analysis of the NUPEC/NRC 1:4 Scale Prestressed Concrete Containment Vessel Model, NUREG/CR 6809, U. S. Nuclear Regulatory Commission, Washington, D. C., February 2003.~~Deleted.

3.8-58 ~~Embedment and Ground Water Effects on SSI for US-APWR Standard Plant, MUAP-11007, Rev. 2, Mitsubishi Heavy Industries, LTD., October 2011.~~Deleted. MIC-03-03-00066 DCD_03.07.02-35

3.8-59 ~~Varma, A. and Malushte, S. In-plane Shear Stiffness Recommendation, April 2011.~~Deleted. MIC-03-03-00057

3.8-60 Seismic Design Criteria for Structures, Systems, and Components, American Society of Civil Engineers, ASCE 43-05, 2005. DCD_03.07.02-35

3.8-61 ~~Ozaki, M. et al. Study on Steel Plate Reinforced Concrete Panels Subjected to Cyclic In-plane Shear, Nuclear Engineering and Design, Volume 228, 2004.~~Deleted. MIC-03-03-00057

3.8-62 ~~Kennedy, Robert P. Relationship Between Effective Linear Stiffness and Secant Stiffness for Pinched In-Plane Shear Behavior or Shear Walls, RPK-110318.1, March 2011.~~Deleted.

3.8-63 Research Achievements of SC Structure and Strength Evaluation of US-APWR SC Structure Based on 1/10th Scale Test Results, MUAP-11005-P, Rev. ~~0~~1, Mitsubishi Heavy Industries, Ltd., ~~January 2011~~December 2012. DCD_03.07.02-35 MIC-03-03-00057

3.8-64 Damping Values for Seismic Design of Nuclear Power Plants, Regulatory Guide 1.61, Rev. 1, U.S. Nuclear Regulatory Commission, March 2007. DCD_03.07.02-35

3.8-65 ~~FEMA 356, Prestandard and Commentary for the Seismic Rehabilitation of Buildings, Federal Emergency Management Agency, November 2000.~~Deleted. MIC-03-03-00057

3.8-66 ~~Evaluation of the Seismic Design Criteria in ASCE/SEI Standard 43-05 for Application to Nuclear Power Plants, NUREG/CR-6926, Brookhaven National Laboratory, March 2007.~~Deleted.

3.8-67 ~~In-Plane Behavior of Concrete Filled Steel (CFS) Elements, Presentation, Enclosure 1 to DCP_NRC_00278, Electronic ADAMS, NRC. Item ID 100130037, Accession Number ML 100050190.~~Deleted. DCD_03.07.02-35 MIC-03-03-00057

3.8-68 Containment Internal Structure Design and Validation Methodology, MUAP-11013, Rev. ~~1~~2, Mitsubishi Heavy Industries, Ltd., ~~August 2011~~February 2013.

3.8-69 ~~A Study on the Structural Performance of SC Thick Walls, Annual Conference of Architectural Institute of Japan (Parts 1-3), 2003.~~Deleted.

3.8-70 Containment Internal Structure: Stiffness and Damping for Analysis, MUAP-11018, Rev. ~~0~~1, Mitsubishi Heavy Industries, Ltd., ~~August 2011~~February 2013. DCD_03.07.02-35 MIC-03-03-00057

3.8-71 Containment Internal Structure: Design Criteria for SC Walls, MUAP-11019, Rev. ~~0~~1, Mitsubishi Heavy Industries, Ltd., ~~September 2011~~January 2013.

3.8-72 Containment Internal Structure: Anchorage and Connection Design and Detailing, MUAP-11020, Rev. ~~0~~1, Mitsubishi Heavy Industries, Ltd., ~~September 2011~~February 2013.

3.8-73 Seismic Design of Liquid-Containing Concrete Structures and Commentary, ACI 350.3-01, Rev. 1, American Concrete Institute, 2001.

3.8-74 Interim Staff Guidance on Assessment of Normal and Extreme Winter Precipitation Loads on the Roofs of Seismic Category I Structures, DC/COL-ISG-7, U.S. Nuclear Regulatory Commission, Washington D.C.

3.8-75 Combining Modal Responses and Spatial Components in Seismic Response Analysis, RG 1.92, U.S. Nuclear Regulatory Commission, July 2006.

3.8-76 Standard Specification for Air-Entraining Admixtures for Concrete, C260-10a, American Society for Testing and Materials, 2010.

3.8-77 Standard Specification for Coal Fly Ash and Raw or Calcined Natural Pozzolan for Use in Concrete, C618-12, American Society for Testing and Materials, 2012.

3.8-78 Standard Specification for Chemical Admixtures for Concrete, C494-12, American Society for Testing and Materials, 2012.

3.8-79 Steel Concrete (SC) Wall Fabrication, Construction and Inspection, MUAP-12006, Rev. 0, Mitsubishi Heavy Industries, Ltd., February 2013.

3.8-80 Damping Reactors of Steel Concrete (SC) Structure, MUAP-10002, Rev. 0 Mitsubishi Heavy Industries, Ltd., March 2010.

3.8-81 Self-Consolidating Concrete, ACI 237R-07, American Concrete Institute, 2007.

3.8-82 Sliding Evaluation and Results for the US-APWR Standard Plant, MUAP-12002, Rev. 1, Mitsubishi Heavy Industries, Ltd., January 2013.

MIC-03-03-00057

Table 3.8.1-1 US-APWR PCCV Basic Design Specification

	US-APWR	Remarks	
Design Condition			
Design Pressure (P_d)	68 psig		
Test Pressure (P_t)	78.2 psig		
Design External Pressure (P)	~~-~~3.9 psig		MIC-03-03-00057
Design Accident Temperature	300°F		
Dimension			
Inner Diameter	149 ft - 2 in.		
Inner Height	226 ft - 5 in.		
Wall Thickness (Cylinder)	4 ft - 4 in.		
Wall Thickness (Dome)	3 ft - 8 in.		
Liner Thickness	0.25 in.		
Large Opening			
Equipment Hatch	ID 27 ft - 11 in.	One Set	
Personnel Air Lock	ID 8 ft - 6 3/8 in.	Two Sets	
Free Volume	2.80 x 10^6 ft^3		
Design Leakage Rate	0.1% mass/24 hours		
Design Life	60 years		
Material			
Concrete Design Strength	7000 psi	PCCV	
	5~~4~~000 psi	Basemat~~ & Modules~~	MIC-03-06-00073
	~~4000 psi~~	~~Modules~~	MIC-03-03-00057
Reinforcement	ASTM A615 ~~Gr. 60~~ or ASTM A706 ~~Gr. 60~~		
Liner Plate	~~ASTM~~ SA-516 Gr. 60 or SA-516 Gr. 70		
Tendon Specification			
PS System	~~VSL (or BBR)~~strand or wire		
Tendon Capacity	~~13 MN Class~~2.9 x 10^5 lb +/- 5%		
Strands	ASTM A416 Grade ~~1860~~270 #15 (Low~~er~~ Relaxation)		
Number of Strands per Tendon	49		
Number of Cylinder Hoop Tendons	94	1 ft – 6 in. Pitch	
Number of ~~Cyl.~~ Dome Hoop Tendons	18	2.5° Radial Pitch	MIC-03-03-00057
Number of Inverted U-shape Tendons	90	2° Radial Pitch	

Table 3.8.1-2 PCCV Load Combinations and Load Factors

Category	D	$L^{(1)}$	F	P_t	G	P_a	T_t	T_o	T_a	E_o	E_{ss}	W	W_t	R_o	R_a	R_r	P_v	H_a
Service																		
Test	1.0	1.0	1.0	1.0			1.0											
Construction	1.0	1.0	1.0					1.0				1.0						
Normal	1.0	1.0	1.0		1.0			1.0						1.0			1.0	
Factored																		
Severe Environmental	1.0	1.3	1.0		1.0			1.0		1.5				1.0			1.0	
	1.0	1.3	1.0		1.0			1.0				1.5		1.0			1.0	
Extreme Environmental	1.0	1.0	1.0		1.0			1.0			1.0			1.0			1.0	
	1.0	1.0	1.0		1.0			1.0					1.0	1.0			1.0	
Abnormal	1.0	1.0	1.0		1.0	1.5			1.0						1.0			
	1.0	1.0	1.0		1.0	1.0			1.0						1.25			
	1.0	1.0	1.0		1.25	1.25			1.0						1.0			
Abnormal/ Severe Environmental	1.0	1.0	1.0		1.0	1.25			1.0	1.25					1.0			
	1.0	1.0	1.0		1.0	1.25			1.0			1.25			1.0			
	1.0	1.0	1.0		1.0			1.0		1.0								1.0
	1.0	1.0	1.0		1.0			1.0				1.0						1.0
Abnormal/ Extreme Environmental	1.0	1.0	1.0		1.0	1.0			1.0		1.0				1.0	1.0		

MIC-03-03-00057

NOTE:

1. Includes all temporary construction loading during and after construction of containment.

Table 3.8.1-3 ~~Temperature Gradients~~Thermal Conditions of the R/B and PCCV (Sheet 1 of 2)

MIC-03-03-00057

Area (See Figure 3.8.1-9 for Identification of Location)	Normal Operation, T_o (°F)		Accident Condition T_a (°F)	
	Winter	Summer	Pipe Break in ~~Refueling~~Reactor Cavity (Winter, Summer)	Pipe Break in SG Compartment (Winter, Summer)
1 Annulus / Safeguard Component Room	50	105	50,130	50,130
2 CCW Pump/Heat Exchanger Room	50	105	50, 130	50, 130
3 M/D, T/D~~,~~ Emergency Feed Water Pump Rooms	50	105	equal to temperature during normal operation	equal to temperature during normal operation
4 Class 1E ~~Switchgear~~Electrical Room	50	95	equal to temperature during normal operation	equal to temperature during normal operation
4' Class 1E UPS Room	50	95	equal to temperature during normal operation	equal to temperature during normal operation
5 Buttress Shaft	-40	115	equal to temperature during normal operation	equal to temperature during normal operation
6 Main Control Room	73	78	equal to temperature during normal operation	equal to temperature during normal operation
6' Remote Shutdown ~~Station~~Console Room	73	78	equal to temperature during normal operation	equal to temperature during normal operation
7 [Deleted]				
8 Class 1E I&C Room	68	79	equal to temperature during normal operation	equal to temperature during normal operation
9 [Deleted]				
10 MS/FW Piping Room	50	130	equal to temperature during normal operation	equal to temperature during normal operation
11 Safety HVAC Equipment Room	50	105	50, 130	50, 130
12 Spent Fuel Pit Water – Normal operation	120		equal to temperature during normal operation	equal to temperature during normal operation
12 Spent Fuel Pit Water – single failure	140		-	-
13 MG Set Room	50	95	equal to temperature during normal operation	equal to temperature during normal operation
14 ~~Auxiliary~~Emergency Feed Water Pit Water	50	105	equal to temperature during normal operation	equal to temperature during normal operation
15 Control Rod Drive Mechanism ~~Panel~~Cabinet Room	50	95	equal to temperature during normal operation	equal to temperature during normal operation
16 Fuel Handling Area	50	105	equal to temperature during normal operation	equal to temperature during normal operation
17 CCW Surge Tank Area	50	105	50, 130	50, 130

MIC-03-03-00057

MIC-03-03-00050

MIC-03-03-00050

MIC-03-03-00057

MIC-03-03-00050

MIC-03-03-00057

Table 3.8.1-3 ~~Temperature Gradients~~Thermal Conditions of the R/B and PCCV (Sheet 2 of 2)

MIC-03-03-00057

Area (See Figure 3.8.1-9 for Identification of Location)	Normal Operation, T_o (°F)		Accident Condition T_a (°F)	
	Winter	Summer	Pipe Break in ~~Refueling~~Reactor Cavity (Winter, Summer)	Pipe Break in SG Compartment (Winter, Summer)
18 R/B Atmosphere (except 1-17)	50	105	equal to temperature during normal operation	equal to temperature during normal operation
19 PCCV Atmosphere	105	120	Figure 3.8.1-10	Figure 3.8.1-10
20 SG Compartment Atmosphere	105	120	Figure 3.8.1-~~10~~12	Figure 3.8.1-12
21 ~~Primary Shield Atmosphere(1)~~[Deleted]	~~105~~	~~120~~	~~Figure 3.8.1-13~~	~~Figure 3.8.1-10~~
22 Reactor Cavity Atmosphere (upper)(2)	150		~~See (4)~~Figure 3.8.1-13(4)	~~See (4)~~Figure 3.8.1-12(4)
23 Reactor Cavity Atmosphere (lower)(3)	105	120	~~See (4)~~ (See No. 26)	~~See (4)~~ (See No. 26)
24 PCCV Sump Pool Water (except SG Compartment Sump, Reactor Cavity Sump and RWSP)~~(5)~~	-		Figure 3.8.1-~~11~~12	Figure 3.8.1-~~11~~12
25 SG Compartment Sump Water(7)	-		Figure 3.8.1-~~11~~12	Figure 3.8.1-12
26 ~~Refueling~~Reactor Cavity Sump Water	-		Figure 3.8.1-13	Figure 3.8.1-~~11~~13
27 RWSP Water(6)	105	120	Figure 3.8.1-11	Figure 3.8.1-11
28 ~~PCCV~~C/V Sump Pump Area	105	120	~~Figure 3.8.1-11~~ (See No. 24)	~~Figure 3.8.1-11~~ (See No. 24)
29 Outdoor Air Temperature	-40	115	equal to temperature during normal operation	equal to temperature during normal operation
30 Basemat Side Temperature	calculated by the linear interpolation between earth temperature and outdoor air temperature			
31 Earth Temperature	35	80	equal to temperature during normal operation	equal to temperature during normal operation
32 Essential Service Water Pipe Chase	-4	140	equal to temperature during normal operation	equal to temperature during normal operation

MIC-03-03-00057

MIC-03-03-00050

MIC-03-03-00057

MIC-03-03-00050

NOTES:

1. ~~Above EL. 46 ft, 11 in.~~[Deleted]
2. ~~EL. 7 ft, 3 in.~46 ft, 11 in.~~EL. 7'-3" to 46'-11" (atmosphere around RV)
3. ~~Below EL. 7 ft, 3 in.~~Below EL. 7'-3" (atmosphere under RV)
4. ~~Below EL. 2521 ft, 93 in., the temperature of "26 RefuelingReactor Cavity Sump Water" is applied. (EL. 25 ft, 9 in. is the maximum water level in a LOCA). From EL. 25 ft, 9 in.~46 ft, 11 in., the temperature of "Primary Shield atmosphere" is applied.~~Below EL. 21'-3": The temperature of "26 Reactor cavity sump water" shall be applied. (EL. 21'-3" is the maximum water level in a LOCA)
5. ~~The following temperature conditions are applied to a HVAC header room, a PCCV coolant drain pump area, and a PCCV coolant drain tank area. Below EL. 25 ft, 9 in., the temperature of "24 PCCV sump pool water" is applied. EL. 25 ft, 9 in. is the maximum water level in a LOCA. Above EL. 25 ft, 9 in., the temperature of "19 PCCV Atmosphere" is applied.~~[Deleted]

MIC-03-03-00050
MIC-03-03-00057
MIC-03-03-00050

6. ~~The water level of the RWSP is EL. 19 ft, 6 in. in a normal operation mode and EL. 7 ft, 7 in. in a recirculation mode.The water level of the RWSP is EL. 20 ft, 2 in. at 100% water level in normal operation mode and EL. 7 ft, 7 in. at design basis minimum water level.~~The water level of the RWSP is EL. 20'-2" in a normal operation mode and EL. 7'-7" in a recirculation mode. MIC-03-03-00043
7. The temperature conditions of "25 SG compartment sump water" shall be applied from EL 25'-3" to EL 25'-9" in SG compartment from EL 15'-10" to EL 21'-3" in header compartment. MIC-03-03-00057

Table 3.8.1-4 Summary of PCCV Models and Analysis Methods

Model	Analysis Method	Program	Purpose
FE shell	Static ~~analyses~~ linear and response spectrum	ANSYS	To calculate PCCV shell stress including the buttresses and vicinity of the large openings such as the equipment hatch and personnel airlocks To calculate local shell stress in vicinity of main steam pipes and feedwater pipes
FE shell	Static ~~analyses~~ linear	ANSYS	To calculate local shell stress in ~~vicinity of the main steam pipes and feedwater pipes~~PCCV liner plate
FE solid (basemat)	Static linear and static non-linear	ANSYS	To calculate PCCV basemat stress and strain. Refer to Subsection 3.8.5.4 for further description of the basemat model.

MIC-03-03-00057

MIC-03-03-00057

Table 3.8.3-1 ~~Type of Construction and Dead Weight of Floor Sections~~ Deleted

MIC-03-03-00057

~~Location~~	~~Member~~	~~Content~~	~~Unit Weight (lb/ft^3)~~	~~Self Weight~~	
				~~(lb/ft^2)~~	~~psi~~
~~EL3' 7"~~	~~Cover Concrete~~	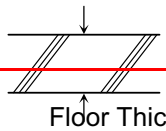 Liner (0.65") Concrete Floor Thickness = 20"	~~150~~	~~30~~ ~~250~~ ~~280~~	~~1.94~~
~~EL16' 0" (Header Room)~~	~~Concrete Floor~~	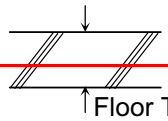 Concrete Floor Thickness = 169"	~~150~~	~~2,113~~ ~~2,113~~	~~14.67~~
~~EL25' 3" (General Floor)~~	~~Concrete Floor~~	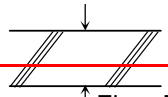 Concrete Floor Thickness =40"	~~150~~	~~500~~ ~~500~~	~~3.47~~
~~EL25' 3" (RWSP Ceiling at Accumulator)~~	~~Concrete Floor~~	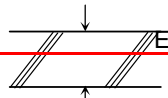 Concrete Embedded Stainless Steel Form Floor Thickness = 51"	~~150~~	~~640~~ ~~25~~ ~~665~~	~~4.62~~
~~EL25' 3" (RWSP Ceiling/ General)~~	~~Concrete Floor~~	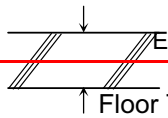 Concrete Embedded Stainless Steel Form Floor Thickness = 40"	~~150~~	~~500~~ ~~25~~ ~~525~~	~~3.65~~
~~EL50' 2"~~	~~Concrete Floor~~	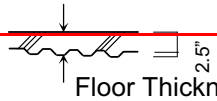 Concrete Metal Deck Beams Floor Thickness = 16"	~~150~~	~~200~~ ~~7~~ ~~33~~ ~~240~~	~~1.67~~
~~EL76' 5"~~	~~Concrete Floor~~	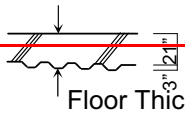 Concrete Metal Deck Beams Floor Thickness = 24"	~~150~~	~~300~~ ~~7~~ ~~33~~ ~~340~~	~~2.36~~
~~EL97' 9"~~ ~~EL121' 5"~~	~~Grating Floor~~	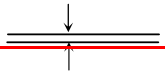 Grating Beams Floor Thickness =1.75"		~~11~~ ~~32~~ ~~43~~	~~0.30~~
~~EL139' 6"~~	~~Concrete Floor~~	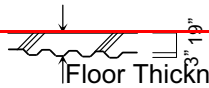 Concrete Metal Deck Beams Floor Thickness = 22"	~~150~~	~~275~~ ~~7~~ ~~33~~ ~~315~~	~~2.19~~

Table 3.8.3-2 Design Pressures within ~~Containment Internal Structure~~CIS (Sheet 1 of 2) MIC-03-03-00057

Compartment No.	Compartment	Design Pressure psi
SG1	SG Compartment (25'-3" - 36'-5")	18
SG2	SG Compartment (36'-5" - 46'-~~6.3~~5.08")	18
SG3	SG Compartment (46'-~~6.3~~5.08" - 55'-1")	~~7~~13
SG4	SG Compartment (55'-1" - 7~~9~~3'-1")	7
SG5	SG Compartment (7~~9~~3'-1" - 8~~5~~3'-9")	~~7~~8
SG6	SG Compartment (8~~5~~3'-9" - 95'-1")	~~14~~34
SG7	SG Compartment (95'-1" - 112'-0")	10
Pzr1	Pressurizer Surge Line Compartment (25'-3" – 58'-5")	2
Pzr 2	Pressurizer Compartment (58'-5" - 76'-1")	14
Pzr 3	Pressurizer Compartment (76'-1" - 89'-9")	
Pzr 4	Pressurizer Compartment (89'-9" - 116'-8")	
Pzr 5	Pressurizer Compartment (116'-8" - 127'-10")	
Pzr 6	Pressurizer Compartment (127'-10" - ~~139~~137'-~~6~~8")	
V1	Inspection Gallery	39
V2	RV Annulus ~~Lower~~	14
V3	NIS Storage Box	18
V4	~~Incore Instrumentation Chase~~Lower Reactor Cavity	

MIC-03-03-00057
MIC-03-03-00066
MIC-03-03-00057
MIC-03-03-00066
MIC-03-03-00057

Table 3.8.3-2 Design Pressures within ~~Containment Internal Structure~~CIS (Sheet 2 of 2) MIC-03-03-00057

Compartment No.	Compartment	Design Pressure psi
RHx1	Regenerative Heat Exchanger Room	7
RHx2	Regenerative Heat Exchanger Valve Room	15
LHx1	Letdown Heat Exchanger Room	8

MIC-03-03-00057

Table 3.8.3-3 Summary of ~~Containment Internal Structure~~CIS Models and Analysis Methods MIC-03-03-00057

Computer Program and Model	Analysis Method	Purpose	Concrete Stiffness(1)
Three Dimensional ANSYS FE of ~~containment internal structure~~CIS fixed at elevation ~~1 ft, 11 in.~~3 ft. 7 in.	- ~~StaticDynamic~~ Static Analysis for Mechanical Loads - Dynamic Analysis (Response Spectrum Analysis) for Seismic Loads	To obtain member forces for seismic and mechanical loads	~~Monolithic~~ ~~Case 1~~ Condition A (Operating) Condition B (Accident)
Three Dimensional ANSYS FE of ~~containment internal structure~~CIS ~~built into R/B whole model~~and R/B basemat	Static Analysis	To obtain member forces for thermal load	~~Monolithic~~ ~~Case 1(2)~~ Condition A (Operating) Condition B (Accident) ~~(Cracked Case 2)~~

MIC-03-03-00066
MIC-03-03-00057
DCD_03.07.02-35

Note~~s~~: DCD_03.07.02-35

1. See Table 3.8.3-4 for ~~stiffness case description~~description of stiffness conditions. MIC-03-03-00066
2. ~~The stress analysis is performed based on the monolithic concrete stiffness, but the thermal stress is reduced by the reduction factor α (=0.5) which is described in the Notes of Table 3.8.3-4.~~ DCD_03.07.02-35

Table 3.8.3-4 Summary of ~~Containment Internal Structure~~CIS Stiffness and Damping Values for Seismic Analysis

DCD_03.07.02-35 MIC-03-03-00066 MIC-03-03-00057

Structural Category	Description	Loading Condition A (E_{ss} + T_o)			Loading Condition B (E_{ss} + T_a)		
		Shear Stiffness	Flexural Stiffness	Damping	Shear Stiffness	Flexural Stiffness	Damping
1	SC Walls, T ≤ 56”	Uncracked $G_cA_c + G_sA_s$	Cracked-Transformed E_cI_{ct}	4%	Fully Cracked $0.5(\bar{D}^{-0.42})A_sG_s$	Cracked-Transformed E_cI_{ct}	5%
2	SC Walls with T > 56”	Uncracked G_cA_c	Uncracked E_cI_c	4%	Cracked $0.5G_cA_c$	Cracked $0.5E_cI_c$	7%
3	Primary Shielding	Uncracked G_cA_c	Uncracked E_cI_c	4%	Uncracked G_cA_c	Uncracked E_cI_c	4%
4	~~Rienf. Conc.~~Reinforced Concrete Slabs	Uncracked G_cA_c	Uncracked E_cI_c	4%	Uncracked G_cA_c	Cracked $0.5E_cI_c$	7%
5	Massive ~~Reinf. Conc.~~Reinforced Concrete Sections	Uncracked G_cA_c	Uncracked E_cI_c	4%	Uncracked G_cA_c	Uncracked E_cI_c	4%
6	Steel structure with non-structural concrete fill	No Concrete Stiffness or Damping Applied					

MIC-03-03-00057

MIC-03-03-00057

Note: Refer to Subsection 3.8.3.4 for application of damping values to seismic analyses.

Table 3.8.3-5 Definition of ~~Critical Locations~~Representative Locations and Thicknesses for Containment Internal Structure(1) MIC-03-03-00057

Wall ~~Description~~ Identifier	Applicable Wall Location	Applicable Elevation Range	Member Thickness(2)	Thickness of Face Plates Provided
Wall 1	North-east wall of ~~r~~Refueling ~~c~~Cavity	~~e~~Elevation 46'~~,~~-11" to 76'~~,~~-5"	4'~~,~~-8" SC ~~w~~Wall with 0.5-in. thick steel plate on inside and outside of wall	0.5 in.
Wall 2	North-west ~~w~~Wall of ~~s~~Secondary ~~s~~Shield	~~e~~Elevation 50'~~,~~-2" to 76'~~,~~-5"	4'~~,~~-0" SC ~~w~~Wall with 0.5-in. thick steel plate on inside and outside of wall	0.5 in.
Wall 3	North-east ~~w~~Wall of RWSP	~~e~~Elevation 1'~~,~~-11" to 25'~~,~~-3"	3'~~,~~-3" SC ~~w~~Wall with 0.5-in. thick steel plate on inside and outside of wall	0.5 in.
Connection Identifier	**Applicable Connection Location**	**First Connected Member**	**Second Connected Member**	**Connection Design Methodology(3)**
Connection 1	SC Wall Basemat Anchorage	3'-3" SC Wall at Outside Face of RWSP	Basemat	Full Strength
Connection 2	SC Wall to SC Wall T Connection	4'-0" SC Wall between SG	4'-0" SC Wall at Outside Face of SG Compartments	Full Strength
Connection 3	Reinforced Concrete Slab to SC Wall Connection	Compartments 3'-4" Reinforced Concrete Slab at Top-of-Concrete Elevation 25'-3"	4'-0" SC Wall at Outside Face of SG Compartments	Full Strength

MIC-03-03-00057

MIC-03-03-00057

NOTES:

1. The applicable ~~elevation levels~~locations of each section are identified ~~and included~~ in Figure 3.8.3-7 (Sht 2) and Figure 3.8.3-11. MIC-03-03-00057
2. The member thickness includes the steel face plates.
3. Connection Design Methodology refers to the Full Strength and Overstrength design approaches defined in Technical Report MUAP-11020 (Reference 3.8-72).

Table 3.8.3-6 ~~Critical~~Representative Portions of the SC Modules

MIC-03-03-00057

Wall Description	Applicable Wall Location	Element Number	Plate Thickness Provided	Yield Stress at Design Temperature	Material of Steel Plates
Wall 1	North-east wall of refueling cavity	11343	0.5 in.(1)	50 ksi	100 ksi(2)
Wall 2	North-west wall of secondary shield	1179	0.5 in.(1)	50 ksi	100 ksi(2)
Wall 3	North-east wall of RWSP	11713	0.5 in.(1)	50 ksi	100 ksi(2)

NOTES:

1. This is a lot more than the plate thickness required for load combinations excluding thermal.
2. The maximum stress intensity range for the load combinations including thermal is much lower than the allowable.
3. Material of Steel Plate is ASTM A572, Grade 50.

MIC-03-03-00057

Table 3.8.4-1 ~~Design Temperatures for Thermal Gradient R/B~~Deleted

~~STRUCTURE~~	~~LOAD~~	~~TEMPERATURE °F~~		~~REMARK~~
		~~(OUTSIDE)~~	~~(INSIDE)~~	
~~Roofs & Exterior Walls above Grade Air Temperatures~~	~~Normal Thermal T_O~~	~~-40~~ ~~+115~~	~~+70~~ ~~+70~~	
	~~Accident Thermal T_a~~	~~-40~~	~~+132~~	~~MSIV Room Exterior Walls & Roof~~
		~~(OUTSIDE)~~	~~(OUTSIDE)~~	
~~Roofs & Exterior Walls above Grade, including MSIV Rooms (4) Concrete Temperatures~~	~~Normal Thermal T_O~~	~~-21.6~~ ~~-22.8~~ ~~-25.4~~ ~~+3.2~~	~~+47.0~~ ~~+48.4~~ ~~+51.5~~ ~~+46.6~~	~~24 in. thickness~~ ~~27 in. thickness~~ ~~36 in. thickness~~ ~~15 in. insulated roof~~
		~~+109.1~~ ~~+108.0~~ ~~+107.5~~ ~~+98.6~~	~~+79.2~~ ~~+80.7~~ ~~+81.3~~ ~~+81.3~~	~~24 in. thickness~~ ~~27 in. thickness~~ ~~36 in. thickness~~ ~~15 in. insulated roof~~
		~~(SIDE 1)~~	~~(SIDE 2)~~	
~~Interior Walls/Slabs~~	~~Normal Thermal T_O~~	~~N/R~~	~~N/R~~	
	~~Accident Thermal T_a~~	~~+70~~	~~+132~~	~~MSIV Room Interior Walls & Slabs~~
~~Exterior Walls Below Grade~~	~~Normal Thermal T_O~~	~~Note (3)~~	~~Note (3)~~	
	~~Accident Thermal T_a~~	~~N/R~~	~~N/R~~	
~~Basemat~~	~~Normal Thermal T_O~~	~~Note (4)~~	~~Note (4)~~	
	~~Accident Thermal T_a~~	~~N/R~~	~~N/R~~	
~~R/B~~	~~Normal Thermal T_O~~	~~(OUTSIDE)~~ ~~-40~~ ~~+115~~	~~(INSIDE)~~ ~~+70~~ ~~+70~~	
	~~Accident Thermal T_a~~	~~-40~~ ~~N/R~~	~~+132~~ ~~N/R~~	~~MSIV Room Wall~~ ~~Rest of Wall~~

~~Notes:~~

1. ~~N/R in the above Table means that the loads due to a thermal gradient are not required to be considered. MSIV = Main Steam Isolation Valve.~~
2. ~~Average ambient temperature used for construction ranges from 35° F to 80° F.~~
3. ~~Temperature at exterior walls below grade is linearly applied from applicable outside temperature to basemat temperature~~
4. ~~The basemat subgrade temperature ranges from 35°F to 80°F.~~
5. ~~Design temperatures for thermal gradient in exterior walls and roof of fuel handling area are included in Appendix B of these criteria.~~
6. ~~The exterior wall of the MSIV area is 24 in. thick except for the portion where the piping is anchored. This 48 in. thickness is perforated with many holes and should use the same surface temperatures as those specified for the adjacent 24 in. thick walls.~~

Table 3.8.4-2 Temperature Gradients of the PS/Bs

Area (See Figure 3.8.4-1 for Identification of location)	Normal operation °F (°C)		Accident condition °F (°C)		
	Winter	Summer	Winter	Summer	
1. Essential Chiller Unit Area	50 (10)	105 (40.6)	equal to temperature during normal operation	equal to temperature during normal operation	
2. GTG Auxiliary Component Room	50 (10)	105 (40.6)	equal to temperature during normal operation	equal to temperature during normal operation	
3. Class 1E Battery Room	65 (18.3)	77 (25)	equal to temperature during normal operation	equal to temperature during normal operation	
4. ~~Alternative~~ AAC Power Source Starter Battery Room	65 (18.3)	77 (25)	50 (10)	105 (40.6)	MIC-03-03-00057
5. Class 1E Battery Charger Room	50 (10)	95 (35)	equal to temperature during normal operation	equal to temperature during normal operation	MIC-03-03-00057
6. Spare Battery Charger Room	50 (10)	95 (35)	equal to temperature during normal operation	equal to temperature during normal operation	
7. ~~Alternative AC Power Source Switchboard Room~~AAC Selector Circuit Panel Room	50 (10)	95 (35)	50 (10)	105 (40.6)	MIC-03-03-00051
8. Class 1E GTG Room	50 (10)	105 (40.6)	50 (10)	120 (48.9)	
9. ACC GTG Room	50 (10)	105 (40.6)	50 (10)	120 (48.9)	
10. Tray Space	50 (10)	105 (40.6)	equal to temperature during normal operation	equal to temperature during normal operation	
11. Class 1E MOV Inverter Room	50 (10)	95 (35)	equal to temperature during normal operation	equal to temperature during normal operation	MIC-03-03-00051
12. Essential Service Water Pipe Chase	-4 (-20)	140 (60)	equal to temperature during normal operation	equal to temperature during normal operation	
13. Outdoor Air Temperature	-40 (-40)	115 (46.1)	equal to temperature during normal operation	equal to temperature during normal operation	
14. Basemat Side Temperature	calculated by the linear interpolation between earth temperature and outdoor air temperature				
15. Earth Temperature	35 (1.7)	80 (26.7)	equal to temperature during normal operation	equal to temperature during normal operation	
16. PS/B Atmosphere (except 1 to ~~10~~12)	50 (10)	105 (40.6)	equal to temperature during normal operation	equal to temperature during normal operation	MIC-03-03-00051

Table 3.8.4-3 Load Combinations and Load Factors for Seismic Category I Concrete Structures ~~and SC modules~~

MIC-03-03-00066
MIC-03-03-00057
MIC-03-03-00066

LOAD COMBINATIONS AND FACTORS(1),(2)												
ACI 349-06 Load Combination:		**1**	**2**	**3**	**4**	**5(7)**	**6(6)**	**7(6), (7)**	**8(6), (7)**	**9**	**10**	**11**
Load Type												
Dead	***D***	1.4	1.4	1.4	1.0	1.0	1.0	1.0	1.0	1.05	1.05	1.05
Liquid	***F***	1.4	1.4	1.4	1.0	1.0	1.0	1.0	1.0	1.05	1.05	1.05
Live	***L***	1.7	1.7	1.7	1.0	1.0	1.0	1.0	1.0	1.3	1.3	1.3
Earth	***H***	1.7	1.7	1.7	1.0	1.0	1.0	1.0	1.0	1.3	1.3	1.3
Design pressure	P_d											
Normal pipe reactions	R_o	1.7	1.7	1.7	1.0	1.0				1.3	1.3	1.3
Normal thermal	T_o				1.0	1.0				1.2(5)	1.2(5)	1.2(5)
Wind	***W***			1.7(9)								1.3(9)
OBE	E_{ob}		1.7(3)					1.15(3)			1.3(3)	
SSE	E_{ss}				1.0(4)				1.0(4)			
Tornado or Hurricane	W_t					1.0(10)						
Accident pressure	P_a						1.4(5)	1.15	1.0			
Accident thermal	T_a						1.0	1.0	1.0			
Accident thermal pipe reactions	R_a						1.0	1.0	1.0			
Pipe rupture reactions	Y_r							1.0	1.0			
Jet impingement	Y_j							1.0	1.0			
Pipe Impact	Y_m							1.0	1.0			
Crane Load	C_{cr}	1.4			1.0(11)		1.0					
Acceptance Criteria(8)		U	U	U	U	U	U	U	U	U	U	U

DCD_02-03 S01
DCD_02-03 S01
MIC-03-03-00057

Notes:

1. Design per ~~ACI 349 Strength Design Method~~ACI 349-06 (Reference 3.8-8), Appendix C, for all load combinations (MIC-03-03-00066)
2. Where any load reduces the effects of other loads, the corresponding coefficient for that load is taken as 0.9 if it can be demonstrated that the load is always present or occurs simultaneously with the other loads. Otherwise the coefficient is taken as zero.
3. OBE loading is applicable for site-specific seismic category I SSCs, only if the value of site-specific OBE is set higher than 1/3 of the site-specific SSE.
4. SSE includes all seismic related hydrodynamic loads and percentage of live loads
5. Load factor adjusted in accordance with RG 1.142, Regulatory Position 6 (Reference 3.8-19). (MIC-03-03-00066)
6. The maximum values of P_a, T_a, R_a, Y_j, Y_r, and Y_m including an appropriate dynamic load factor are used, unless an appropriate time history analysis is performed to justify otherwise.
7. Satisfy the load combination first without W_t, Y_r, Y_j, and Y_m. When considering concentrated loads, exceed~~e~~ances of local strengths and stresses may be considered in analyses for impactive or impulsive effects (MIC-03-03-00066)

in accordance with ~~ACI 349-97, Appendix C~~ACI 349-06 (Reference 3.8-8), Appendix F, except as noted in RG 1.142 Regulatory Positions 10 and 11. MIC-03-03-00066

8. The required strength U shall be equal to or greater than the strength required to resist the factored loads and/or related internal moments and forces, for each of the load combinations shown in this table.

9. Wind loads are per Subsection 3.3.1. DCD_02-03 S01

10. Extreme wind loads including tornado and hurricane loads. Velocity pressure loads, atmospheric pressure loads (tornado only) and the missile loads due to tornadoes or hurricanes are combined as described in Subsection 3.3.2. Tornado-generated missiles and hurricane-generated missiles are given in Subsection 3.5.1.4.

11. The crane load may be omitted if probability analysis demonstrates that the simultaneous occurrence of an SSE (Design Basis Event) with crane usage is not credible per Section C.2.9 of ACI 349-06 (Reference 3.8-8). MIC-03-03-00057

Table 3.8.4-4 Load Combinations and Load Factors for Seismic Category I Steel Structures

ALLOWABLE STRESS DESIGN (ASD) LOAD COMBINATIONS AND APPLICABLE STRESS LIMIT COEFFICIENTS													
AISC N690 Load Combination: (6)		**1**	**2**	**3(9)**	**4(9)**	**5(9)**	**6(9)**	**7**	**8**	**9(4)**	**9a(4)(10)**	**10(4)(5)**	**11(4)(5)**
Load Type													
Dead	D	1.0	1.0	1.0	1.0	1.0	1.0	1.0	1.0	1.0	1.0	1.0	1.0
Live	L	1.0	1.0	1.0	1.0	1.0	1.0	1.0	1.0	1.0	1.0	1.0	1.0
Normal pipe reactions	R_o		1.0			1.0	1.0	1.0	1.0				
Normal thermal	T_o		1.0			1.0	1.0	1.0	1.0				
Wind	W			1.0(13)		1.0(13)							
OBE	E_{ob}				1.0		1.0					1.0	
SSE	E_{ss}								1.0				1.0
Tornado or Hurricane	W_t							1.0(14)					
Accident pressure	P_a									1.0		1.0	1.0
Accident thermal	T_a									1.0	1.0	1.0	1.0
Accident thermal pipe reactions	R_a									1.0	1.0	1.0	1.0
Pipe rupture reactions	Y_r											1.0	1.0
Jet impingement	Y_j											1.0	1.0
Pipe Impact	Y_m											1.0	1.0
Stress Limit Coefficient (1)(2)(8)(12)		1.0(3)	1.0(3)	1.0(3)	1.0(3)	1.0(3)	1.0(3)	1.6(7)(11)	1.6(7)(11)	1.6(7)(11)	1.6(7)(11)	1.6(7)(11)	1.7(7)(11)

DCD_02-03 S01
MIC-03-03-00057
DCD_02-03 S01

Notes:
1. Coefficients are applicable to primary stress limits given in ANSI/AISC N690-1994 Sections Q1.5.1, Q1.5.2, Q1.5.3, Q1.5.4, Q1.5.5, Q1.6, Q1.10, and Q1.11. Calculated stresses shall not exceed allowable stresses for each of the load combinations shown in this table.
2. In no instance shall the allowable stress exceed $0.7F_u$ in axial tension nor $0.7F_u$ times the ratio Z/S for tension plus bending.
3. For primary plus secondary stress, the allowable limits are increased by a factor of 1.5.
4. The maximum values of P_a, T_a, R_a, Y_j, Y_r, and Y_m, including an appropriate dynamic load factor, is used in load combinations 9 through 11, unless an appropriate time history analysis is performed to justify otherwise.
5. In combining loads from a postulated high-energy pipe break accident and a seismic event, the SRSS may be used, provided that the responses are calculated on a linear basis.
6. All load combinations is checked for a no-live-load condition
7. In load combinations 7 through 11, the stress limit coefficient in shear shall not exceed 1.4 in members and bolts.
8. Secondary stresses which are used to limit primary stresses are treated as primary stresses.
9. Consideration is also given to snow and other loads as defined in ASCE 7.
10. This load combination is to be used when the global (non-transient) sustained effects of T_a are considered.
11. The stress limit coefficient where axial compression exceeds 20% of normal allowable, is 1.5 for load combinations 7, 8, 9, 9a, and 10, and 1.6 for load combination 11. For load combinations 7 through 11 the allowable stress shall not exceed 1.0 F_y.
12. Load combinations and stress limit coefficients are applicable for AISI design of cold-formed steel structural members used in subsystem supports. Allowable strengths per AISI may be increased by the stress limit coefficients shown, subject to the limits noted in this table. The allowable strength shall equal or exceed the required strength calculated, in accordance with AISI, for each of the load combinations shown in this table.

Table 3.8.4-5 ~~Summary of R/B and PS/Bs Models and Analysis Methods~~Deleted MIC-03-03-00057

~~Computer Program and Model~~	~~Analysis Method~~	~~Purpose~~	~~Concrete Stiffness~~
~~Three-dimensional ANSYS FE of R/B wholecomplex model~~	~~Static Analysis~~	~~To obtain member forces including thermal load~~	~~Monolithic(1)~~
~~Three-dimensional ANSYS FE of PS/B model~~	~~Static Analysis~~	~~To obtain member forces~~	~~Monolithic(1)~~

MIC-03-03-00066

~~Note:~~

1. ~~The stress analysis is performed based on the monolithic concrete stiffness, but the thermal stress is reduced by the reduction factor α (=0.5).~~

Table 3.8.4-6 West ~~Exterior~~Common Wall, SECTION 1, Details of Wall Reinforcement MIC-03-03-00057

	Provided Reinforcement		
	Vertical	Horizontal	Shear
WALL ZONE 1 (Concrete Thickness 40 in.) El 3'-7" → El 25'-3"			
Load Combination	~~0.9~~1.0D+1.0F+1.0L+1.0H ±1.0E_{ss}+$T_{~~o~~a}$	~~0.9~~1.0D+1.0F+1.0L+1.0H ±1.0E_{ss}+$T_{~~o~~a}$	NONE
Outside Face	#11@~~6~~12"+#11@12" (0.~~975~~650)	#11@~~6~~12"+#11@12" (0.~~975~~650)	-Not Req'd
Inside Face	#11@12" +#10@12" (0.590)	#11@12" +#10@12" (0.590)	
WALL ZONE 2 (Concrete Thickness 40 in.) El 25'-3" → El 50'-2"			
Load Combination	~~0.9~~1.0D+1.0F+1.0L+1.0H ±1.0E_{ss}+$T_{~~o~~a}$	~~0.9~~1.0D+1.0F+1.0L+1.0H ±1.0E_{ss}+$T_{~~o~~a}$	NONE
Outside Face	#11@12"+#11@12" (0.650)	#11@~~6~~12"+#11@12" (0.~~975~~650)	-Not Req'd
Inside Face	#11@12" +#10@12" (0.590)	#11@12" +#10@12" (0.590)	
WALL ZONE 3 (Concrete Thickness 32 in.) El 50'-2" → El 76'-5"			
Load Combination	~~0.9~~1.0D+1.0F+1.0L+1.0H ±1.0E_{ss}+$T_{~~o~~a}$	~~0.9~~1.0D+1.0F+1.0L+1.0H ±1.0E_{ss}+$T_{~~o~~a}$	NONE
Outside Face	#11@12" +#9@12" (0.667)	#11@6" (0.813)	-Not Req'd
Inside Face	#11@12" (0.406)	#11@12" (0.406)	
WALL ZONE 4 (Concrete Thickness 28 in.) El 76'-5" → El 101'-0"			
Load Combination	~~0.9~~1.0D+1.0F+1.0L+1.0H ±1.0E_{ss}+$T_{~~o~~a}$	1.0~~5~~D+1.0F+1.~~3~~0L+~~1.05F~~ 1.0H+1.0E_{ss}+~~1.2~~$T_{a~~o~~}$	NONE
Outside Face	#11@12" +9@12" (0.~~464~~762)	#11@6" (0.929)	-Npt Req'd
Inside Face	#11@12" (0.464)	#11@12" (0.464)	

Notes: ~~Load Combination reflects the controlling load combination for the outside face required reinforcement. ( ) indicates reinforcement ratio.~~ MIC-03-03-00057

1. ( ) Indicates reinforcement to concrete ratio in terms of a percentage.
2. Load combination indicated includes all permutations of this load case combination.

Table 3.8.4-7 South Interior Wall, SECTION 2, Details of Wall Reinforcement

	Provided Reinforcement			
	Vertical	Horizontal	Shear	
WALL ZONE 1 (Concrete Thickness ~~44~~52 in.) El 3'-7" → El 25'-3"				MIC-03-03-00057
Load Combination	~~0.9~~1.0D+1.0F+1.0L+1.0H+ 1.0E_{ss}+$T_{~~o~~a}$	~~0.9~~1.0D+1.0F+1.0L+1.0H+ 1.0E_{ss}+$T_{~~o~~a}$	NONE	
Each Face	#11@6" +#11@12" (0.~~886~~750)	#11@6" +#11@12" (0.~~886~~750)	-Not Req'd	MIC-03-03-00057
WALL ZONE 2 (Concrete Thickness 40 in.) El 25'-3" → El 50'-2"				
Load Combination	~~0.9~~1.0D+1.0F+1.0L+1.0H+ 1.0E_{ss}+$T_{~~o~~a}$	~~0.9~~1.0D+1.0F+1.0L+1.0H+ 1.0E_{ss}+$T_{~~o~~a}$	NONE	MIC-03-03-00057
Each Face	#11@~~12~~6" +#9@12" (0.~~533~~858)	#11@12" +#~~7~~9@12" (0.~~450~~533)	-Not Req'd	
WALL ZONE 3 (Concrete Thickness 40 in.) El 50'-2" → El 76'-5"				
Load Combination	1.0D+~~1.0L+~~1.0F+1.0L+1.0H+ 1.0E_{ss} +$T_{~~o~~a}$	1.0D+~~1.0L+~~1.0F+1.0L+1.0H+ 1.0E_{ss} +$T_{~~o~~a}$	NONE	MIC-03-03-00057
Each Face	#11@12" +#9@12" (0.533)	#11@12" +#~~7~~9@12" (0.~~450~~533)	-Not Req'd	
WALL ZONE 4 (Concrete Thickness 40 in.) El 76'-5" → El 86'-4"				
Load Combination	~~0.9~~1.0D+1.0F+1.0L+1.0H+ 1.0E_{ss}+$T_{~~o~~a}$	~~0.9~~1.0D+1.0F+1.0L+1.0H+ 1.0E_{ss}+$T_{~~o~~a}$	NONE	MIC-03-03-00057
Each Face	#11@12" +#9@12" (0.533)	#11@12"+#~~11~~9@12" (0.~~650~~533)	-Not Req'd	
WALL ZONE 5 (Concrete Thickness 40 in.) El 86'-4" → El 101'-0"				
Load Combination	~~0.9~~1.0D+1.0F+1.0L+1.0H+ 1.0E_{ss}+$T_{~~o~~a}$	1.0~~5~~D+1.0F+1.~~3~~0L+1.0H+~~1.0 5F~~1.0E_{ss}+~~1.2~~$T_{~~o~~a}$	NONE	MIC-03-03-00057
Each Face	#11@12" +#9@12" (0.533)	#11@12"+#~~11~~9@12" (0.~~650~~533)	-Not Req'd	

Notes: MIC-03-03-00057

1. ( ) ~~i~~Indicates reinforcement to concrete ratio in terms of a percentage.
2. Load combination indicated includes all permutations of this load case combination.

Table 3.8.4-8 North Exterior Wall of Spent Fuel Pit, SECTION 3, Details of Wall Reinforcement

	Provided Reinforcement		
	Vertical	Horizontal	Shear
WALL ZONE 1 (Concrete Thickness ~~44~~93 in.) El 30'-~~7~~1" → El ~~2~~50'-~~3~~2"			
Load Combination	~~0.9~~1.0D+1.0F+1.0L+1.0H+ 1.0E_{ss}+$T_{~~e~~a}$	~~0.9~~1.0D+1.0F+1.0L+1.0H+ 1.0E_{ss}+$T_{~~e~~a}$	NONE
Inside Face:	#14@12" +#14@12" (0.403)	#14@12" +#14@12" (0.403)	-Not Req'd
~~Each Face~~Outside Face:	#1~~1~~4@6" +#1~~1~~4@~~12~~6" (0.8~~8~~06)	#1~~1~~4@6" +#1~~1~~4@~~12~~6" (0.8~~8~~06)	
WALL ZONE 2 (Concrete Thickness ~~40~~93 in.) El ~~2~~50'-~~3~~2" → El 65~~0~~'-~~2~~0"			
Load Combination	~~0.9~~1.0D+1.0F+1.0L+1.0H+ 1.0E_{ss}+$T_{~~e~~a}$	~~0.9~~1.0D+1.0F+1.0L+1.0H+ 1.0E_{ss}+$T_{~~e~~a}$	NONE
Inside Face:	#14@12" +#14@12" (0.403)	#14@12" +#14@12" (0.403)	-Not Req'd
~~Each Face~~Outside Face:	#1~~1~~4@~~12~~6" +#~~9~~14@~~12~~6" (0.~~533~~806)	#1~~1~~4@~~12~~6" +#~~7~~14@~~12~~6" (0.~~450~~806)	
WALL ZONE 3 (Concrete Thickness ~~40~~152 in.) El 65~~0~~'-~~2~~0" → El 76'-5"			
Load Combination	1.0D+~~1.0L+~~1.0F+1.0L+1.0H ±1.0E_{ss} +$T_{~~e~~a}$	1.0D+~~1.0L+~~1.0F+1.0L+1.0H ±1.0E_{ss} +$T_{~~e~~a}$	NONE
Inside Face:	#14@12" +#14@12" (0.247)	#14@12" +#14@12" (0.247)	-Not Req'd
~~Each Face~~Outside Face:	#1~~1~~4@~~12~~6" +#~~9~~14@12" (0.~~533~~370)	#1~~1~~4@~~12~~6" +#~~7~~14@~~12~~6" (0.~~45~~370)	
~~WALL ZONE 4 (Concrete Thickness 40 in.) El 76' 5" → El 86' 4"~~			
~~Load Combination~~	~~0.9D+1.0F+1.0E_{ss}+T_e~~	~~0.9D+1.0F+1.0E_{ss}+T_e~~	~~NONE~~
~~Each Face~~	~~#11@12" +#9@12" (0.533)~~	~~#11@12"+#11@12" (0.650)~~	-
~~WALL ZONE 5 (Concrete Thickness 40 in.) El 86' 4" → El 101' 0"~~			
~~Load Combination~~	~~0.9D+1.0F+1.0E_{ss}+T_e~~	~~1.05D+1.3L+1.05F+1.2T_e~~	~~NONE~~
~~Each Face~~	~~#11@12" +#9@12" (0.533)~~	~~#11@12"+#11@12" (0.650)~~	-

MIC-03-03-00057

Notes: ~~Load Combination reflects the controlling load combination for the outside face required reinforcement. ( ) indicates reinforcement ratio.~~

1. ( ) Indicates reinforcement to concrete ratio in terms of a percentage.
2. Load combination indicated includes all permutations of this load case combination.

Table 3.8.4-9 South Exterior Wall, SECTION 4, Details of Wall Reinforcement

	Provided Reinforcement		
	Vertical	Horizontal	Shear
WALL ZONE 1 (Concrete Thickness ~~44~~60 in.) El 3'-7" → El 25'-3"			
Load Combination	~~0.9~~1.0D+1.0F+1.0L+1.0H+ 1.0E_{ss}+$T_{~~o~~a}$	~~0.9~~1.0D+1.0F+1.0L+1.0H+ 1.0E_{ss}+$T_{~~o~~a}$	NONE
Inside Face:	#11@6" +#11@12" (0.650)	#11@12" +#11@12" (0.433)	-Not Req'd
~~Each Face~~Outside Face:	#11@6" +#11@~~12~~6" (0.8~~8~~67)	#11@6" +#11@~~12~~6" (0.8~~8~~67)	
WALL ZONE 2 (Concrete Thickness ~~4~~60 in.) El 25'-3" → El 50'-2"			
Load Combination	~~0.9~~1.0D+1.0F+1.0L+1.0H+ 1.0E_{ss}+$T_{~~o~~a}$	~~0.9~~1.0D+1.0F+1.0L+1.0H+ 1.0E_{ss}+$T_{~~o~~a}$	NONE
Inside Face:	#11@12" +#11@12" (0.433)	#11@12" +#11@12" (0.433)	-Not Req'd
~~Each Face~~Outside Face:	#11@~~12~~6" +#~~9~~11@~~12~~6" (0.~~533~~867)	#11@~~12~~6" +#~~7~~11@12" (0.~~4~~650)	
WALL ZONE 3 (Concrete Thickness ~~4~~60 in.) El 50'-2" → El 76'-5"			
Load Combination	1.0D+~~1.0L+~~1.0F+1.0L+1.0H ~~+~~1.0E_{ss} +$T_{~~o~~a}$	1.0D+~~1.0L+~~1.0F+1.0L+1.0H ~~+~~1.0E_{ss} +$T_{~~o~~a}$	NONE
Inside Face:	#11@12" +#11@12" (0.433)	#11@12" +#11@12" (0.433)	-Not Req'd
~~Each Face~~Outside Face:	#11@~~12~~6" +#~~9~~11@12" (0.~~533~~650)	#11@~~12~~6" +#~~7~~11@12" (0.~~4~~650)	
WALL ZONE 4 (Concrete Thickness ~~4~~60 in.) El 76'-5" → El ~~86~~101'-~~4~~0"			
Load Combination	~~0.9~~1.0D+1.0F+1.0L+1.0H+ 1.0E_{ss}+$T_{~~o~~a}$	~~0.9~~1.0D+1.0F+1.0L+1.0H+ 1.0E_{ss}+$T_{~~o~~a}$	NONE
Inside Face:	#11@12" +#11@12" (0.433)	#11@12" +#11@12" (0.433)	-Not Req'd
~~Each Face~~Outside Face:	#11@~~12~~6" +#~~9~~11@12" (0.~~533~~650)	#11@~~12~~6"+#11@12" (0.650)	
WALL ZONE 5 (Concrete Thickness ~~4~~60 in.) El ~~86~~101'-~~4~~0" → El 1~~0~~15'-~~0~~6"			
Load Combination	~~0.9~~1.0D+1.0F+1.0L+1.0H+ 1.0E_{ss}+$T_{~~o~~a}$	1.0~~5~~D+1.0F+1.~~3~~0L+1.0~~5F~~H+ 1.0E_{ss}+~~1.2~~$T_{~~o~~a}$	NONE
Inside Face:	#11@12" +#11@12" (0.433)	#11@6" +#11@12" (0.650)	-Not Req'd
~~Each Face~~Outside Face:	#11@~~12~~6" +#~~9~~11@12" (0.~~533~~650)	#11@~~12~~6"+#11@~~12~~6" (0.~~650~~867)	

MIC-03-03-00057

~~Note: Load Combination reflects the controlling load combination for the outside face required reinforcement. ( ) indicates reinforcement ratio.~~

Table 3.8.4-10 Spent Fuel Pit Slab, AREA 3, Details of Slab Reinforcement

	Provided Reinforcement		
	NS-Dir.	EW-Dir.	Shear
AREA 3 (Concrete Thickness 126 in.) El 30'-1"			
~~Load Combination~~	1.0D+~~1.0L+~~1.0F+1.0L+1.0H +1.0E_{ss}+$T_{~~o~~a}$	1.0D+~~1.0L+~~1.0F+1.0L+1.0H +1.0E_{ss}+$T_{~~o~~a}$	-
Top & Bottom	#1~~4~~1@12"+#1~~4~~1@12"+ #11@12" (0.~~298~~310)	#1~~4~~1@12"+#1~~4~~1@12"+ #11@12" (0.~~298~~310)	

MIC-03-03-00057

Notes:

1. ( ) Indicates reinforcement to concrete ratio in terms of a percentage.
2. Load combination indicated includes all permutations of this load case combination.

Table 3.8.4-11 Emergency Feedwater Pit Slab, AREA 4, Details of Slab Reinforcement

	Provided Reinforcement		
	NS-Dir.	EW-Dir.	Shear
AREA ~~3~~4 (Concrete Thickness ~~126~~52 in.) El ~~30~~76'-~~1~~5"			
~~Load Combination~~	1.0D+~~1.0L+~~1.0F+1.0L+1.0H +1.0E_{ss}+$T_{~~o~~a}$	1.0D+~~1.0L+~~1.0F+1.0L+1.0H +1.0E_{ss}+$T_{~~o~~a}$	-
Top & Bottom	#14@12"+#14@12" (0.~~298~~721)	#14@12"+#14@12" (0.~~298~~721)	

MIC-03-03-00057

MIC-03-03-00057

Notes:

1. ( ) Indicates reinforcement to concrete ratio in terms of a percentage.
2. Load combination indicated includes all permutations of this load case combination.

Table 3.8.4-12 Typical Reinforcement in West PS/B South Exterior Wall – SECTION 1 (On Column Line ~~CP~~LR and Between Column Lines 1~~P~~R & ~~2P~~3R) MIC-03-03-00057 MIC-03-03-00057

	Provided Reinforcement		
	Vertical	Horizontal	Shear
WALL ZONE 1 (Concrete Thickness ~~32~~40 in.) El -26'-4" → El -14'-2"			
Load Combination	~~0.9~~1.0D+1.0F+1.0L+1.0H+ 1.0E_{ss}+T_a	~~0.9~~1.0D+1.0F+1.0L+1.0H+ 1.0E_{ss}+T_a	#4@12" (Vert.) #4@12" (Horiz.)
Outside Face	#11@6" (0.~~813~~650)	#11@6" (0.~~813~~650)	
Inside Face	#11@~~12~~6" (0.~~406~~650)	#1~~0~~1@~~12~~6" (0.~~331~~650)	
WALL ZONE 2 (Concrete Thickness ~~32~~40 in.) El -14'-2" → El 3'-7"			
Load Combination	1.0D+1.0F+1.0L+1.0H+ 1.0E_{ss}+T_a	~~0.9~~1.0D+1.0F+1.0L+1.0H+ 1.0E_{ss}+T_a	NONE
Outside Face	#11@6" (0.~~813~~650)	#11@6" (0.~~813~~650)	-Not Req'd
Inside Face	#11@~~12~~6 (0.~~406~~650)	#1~~0~~1@~~12~~6" (0.~~331~~650)	
WALL ZONE 3 (Concrete Thickness ~~21~~40 in.) El 3'-7" → El 24'-2"			
Load Combination	1.0D+1.0F+1.0L+1.0H+ 1.0E_{ss}+T_a	1.0~~5~~D+1.0F+1.~~3~~0L+1.~~3~~0H+ 1.~~2~~0E_{ss}~~+~~$T_{~~o~~a}$	NONE
Outside Face	#11@6" (~~1.238~~0.650)	#11@6" (~~1.238~~0.650)	-Not Req'd
Inside Face	#11@~~12~~6" (0.6~~19~~50)	#11@~~12~~6" (0.6~~19~~50)	
WALL ZONE 4 (Concrete Thickness ~~21~~40 in.) El 24'-2" → El 39'-6"			
Load Combination	1.0D+1.0F+1.0L+1.0H+ 1.0E_{ss}+T_a	1.0D+1.0F+1.0L+1.0H+ 1.0E_{ss}+T_a	NONE
Outside Face	#11@6" (~~1.238~~0.650)	#11@6" (~~1.238~~0.650)	-Not Req'd
Inside Face	#11@12" (0.6~~19~~50)	#11@12" (0.6~~19~~50)	
WALL ZONE 5 (Concrete Thickness 21 in.) El 39'-6" → El 49'-0"			
Load Combination	1.0D+1.0F+1.0L+1.0H+ 1.0E_{ss}+T_a	1.0D+1.0F+1.0L+1.0H+ 1.0E_{ss}+T_a	NONE
Inside Face	#11@12" (0.619)	#11@12" (0.619)	Not Req'd
Outside Face	#11@12" (0.619)	#11@12" (0.619)	

Notes: ~~Load Combination reflects the controlling load combination for the outside face required reinforcement. ( ) indicates reinforcement ratio~~

1. ( ) Indicates reinforcement to concrete ratio in terms of a percentage.
2. Load combination indicated includes all permutations of this load case combination.

Table 3.8.4-13 Typical Reinforcement in West PS/B Interior Wall – SECTION 2 (On Column Line ~~4P~~7R and Between Column Lines ~~BP~~JR & ~~CP~~LR) MIC-03-03-00057

	Provided Reinforcement		
	Vertical	Horizontal	Shear
WALL ZONE 1 (Concrete Thickness 20 in.) El -26'-4" → El 3'-7"			
Load Combination	1.0D+1.0F+1.0L+1.0H+1.0E_{ss}+T_a	1.0D+1.0F+1.0L+1.0H+1.0E_{ss}+T_a	NONE
Each Face	#11@12" (0.650)	#11@12" (0.650)	~~-~~Not Req'd

MIC-03-03-00057

MIC-03-03-00057

Notes:

1. ( ) ~~i~~Indicates reinforcement to concrete ratio in terms of a percentage.
2. Load combination indicated includes all permutations of this load case combination.

Table 3.8.4-14 Typical Reinforcement in West PS/B Floor at Elevation 3′-7″– AREA 1 MIC-03-03-00057

(Between Column Lines ~~BP & CP 2P & 3P~~3R & 5R - KR & LR) MIC-03-03-00057

	Provided Reinforcement		
	~~Vertical~~Top	~~Horizontal~~Bottom	Shear
~~WALL ZONE~~AREA 1 (Concrete Thickness ~~20~~32 in.) El -26'-4" → El 3'-7"			
Load Combination	1.0D+1.0F+1.0L+1.0H+1.0E_{ss}+T_a	1.0D+1.0F+1.0L+1.0H+1.0E_{ss}+T_a	NONE
Each ~~Face~~Direction	#~~11~~9@~~12~~6" (0.~~650~~521)	#1~~1~~0@12" (0.~~650~~331)	~~-~~Not Req'd

MIC-03-03-00057

Notes:

1. ( ) ~~i~~Indicates reinforcement to concrete ratio in terms of a percentage.
2. Load combination indicated includes all permutations of this load case combination.

MIC-03-03-00057

Table 3.8.4-15 Typical Reinforcement in West PS/B North Exterior Wall – SECTION 3 (On Column Line JR and Between Column Lines 1R & 3R)

	Provided Reinforcement		
	Vertical	Horizontal	Shear
WALL ZONE 1 (Concrete Thickness 50 in.) El -26'-4" → El -14'-2"			
Load Combination	1.0D+1.0F+1.0L+1.0H+1.0E_{ss}+T_a	1.0D+1.0F+1.0L+1.0H+1.0E_{ss}+T_a	#4@12" (Vert.) #4@12" (Horiz.)
Outside Face	#11@6" (0.520)	#11@6" (0.520)	
Inside Face	#11@6" (0.520)	#11@6" (0.520)	
WALL ZONE 2 (Concrete Thickness 50 in.) El -14'-2" → El 3'-7"			
Load Combination	1.0D+1.0F+1.0L+1.0H+1.0E_{ss}+T_a	1.0D+1.0F+1.0L+1.0H+1.0E_{ss}+T_a	None
Outside Face	#11@6" (0.520)	#11@6" (0.520)	Not Req'd
Inside Face	#11@6" (0.520)	#11@6" (0.520)	
WALL ZONE 3 (Concrete Thickness 50 in.) El 3'-7" → El 24'-2"			
Load Combination	1.0D+1.0F+1.0L+1.0H+1.0E_{ss}+T_a	1.0D+1.0F+1.0L+1.0H+1.0E_{ss}+T_a	None
Outside Face	#11@6" (0.520)	#11@6" (0.520)	Not Req'd
Inside Face	#11@6" (0.520)	#11@6" (0.520)	
WALL ZONE 4 (Concrete Thickness 40 in.) El 24'-2" → El 39'-6"			
Load Combination	1.0D+1.0F+1.0L+1.0H+1.0E_{ss}+T_a	1.0D+1.0F+1.0L+1.0H+1.0E_{ss}+T_a	None
Outside Face	#11@6" (0.650)	#11@6" (0.650)	Not Req'd
Inside Face	#11@6" (0.650)	#11@6 (0.650)	
WALL ZONE 5 (Concrete Thickness 40 in.) El 39' 6"→ El 49' 0"			
			None
Outside Face	#11@6" (0.650)	#11@6" (0.650)	Not Req'd
Inside Face	#11@6" (0.650)	#11@6" (0.650)	

Notes:

1. ( ) Indicates reinforcement to concrete ratio in terms of a percentage.
2. Load combination indicated includes all permutations of this load case combination.

MIC-03-03-00057

Table 3.8.4-16 Typical Reinforcement in East PS/B East Exterior Wall – SECTION 1 (On Column Line 20R and Between Column Lines F1R & G4R)

	Provided Reinforcement		
	Vertical	Horizontal	Shear
WALL ZONE 1 (Concrete Thickness 40 in.) El -26'-4" → El -14'-2"			
Load Combination	1.0D+1.0F+1.0L+1.0H+1.0E_{ss}+T_a	1.0D+1.0F+1.0L+1.0H+1.0E_{ss}+T_a	#4@12" (Vert.) #4@12" (Horiz.)
Outside Face	#11@6" (0.650)	#11@6" (0.650)	
Inside Face	#11@6" (0.650)	#11@6" (0.650)	
WALL ZONE 2 (Concrete Thickness 40 in.) El -14'-2" → El 3'-7"			
Load Combination	1.0D+1.0F+1.0L+1.0H+1.0E_{ss}+T_a	1.0D+1.0F+1.0L+1.0H+1.0E_{ss}+T_a	None
Outside Face	#11@6" (0.650)	#11@6" (0.650)	Not Req'd
Inside Face	#11@6" (0.650)	#11@6" (0.650)	
WALL ZONE 3 (Concrete Thickness 40 in.) El 3'-7" → El 26'-11"			
Load Combination	1.0D+1.0F+1.0L+1.0H+1.0E_{ss}+T_a	1.0D+1.0F+1.0L+1.0H+1.0E_{ss}+T_a	None
Outside Face	#11@6" (0.650)	#11@6" (0.650)	Not Req'd
Inside Face	#11@6" (0.650)	#11@6" (0.650)	
WALL ZONE 4 (Concrete Thickness 40 in.) El 26'-11" → El 39'-6"			
Load Combination	1.0D+1.0F+1.0L+1.0H+1.0E_{ss}+T_a	1.0D+1.0F+1.0L+1.0H+1.0E_{ss}+T_a	None
Outside Face	#11@6" (0.650)	#11@6" (0.650)	Not Req'd
Inside Face	#11@6" (0.650)	#11@6 (0.650)	

Notes:

1. ( ) Indicates reinforcement to concrete ratio in terms of a percentage.
2. Load combination indicated includes all permutations of this load case combination.

MIC-03-03-00057

Table 3.8.4-17 Typical Reinforcement in East PS/B Interior Wall – SECTION 2 (On Column Line K1R and Between Column Lines 18R & 20R)

	Provided Reinforcement		
	Vertical	Horizontal	Shear
WALL ZONE 1 (Concrete Thickness 40 in.) El -26'-4" → El -3'-7"			
Load Combination	1.0D+1.0F+1.0L+1.0H+1.0E_{ss}+T_a	1.0D+1.0F+1.0L+1.0H+1.0E_{ss}+T_a	None
Each Face	#11@6" (0.650)	#11@6" (0.650)	Not Req'd

Notes:

1. ( ) Indicates reinforcement to concrete ratio in terms of a percentage.
2. Load combination indicated includes all permutations of this load case combination.

Table 3.8.4-18 Typical Reinforcement in East PS/B Floor at Elevation 3'-7" – AREA 1 (Between Column Lines 19R & 20R – G4R & JR)

	Provided Reinforcement		
	Top	Bottom	Shear
AREA 1 (Concrete Thickness 32 in.) El -3'-7"			
Load Combination	1.0D+1.0F+1.0L+1.0H+1.0E_{ss}+T_a	1.0D+1.0F+1.0L+1.0H+1.0E_{ss}+T_a	None
Each Direction	#9@6" (0.521)	#10@12" (0.331)	Not Req'd

Notes:

1. ( ) Indicates reinforcement to concrete ratio in terms of a percentage.
2. Load combination indicated includes all permutations of this load case combination.

MIC-03-03-00057

Table 3.8.4-19 Typical Reinforcement in ESWPC Exterior Wall – SECTION 1

	Provided Reinforcement		
	Vertical	Horizontal	Shear
WALL ZONE 1 (Concrete Thickness 36 in.) El -26'-4" → El -15'-8"			
Outside Face	#10@6" (0.588)	#10@6" (0.588)	#4@12" (Vert. and Horiz.)
Inside Face	#10@6" (0.588)	#10@6" (0.588)	
WALL ZONE 2 (Concrete Thickness 36 in.) El -15'-8" → El -9'-8"			
Outside Face	#10@6" (0.588)	#10@6" (0.588)	Not Req'd
Inside Face	#10@6" (0.588)	#10@6" (0.588)	
WALL ZONE 3 (Concrete Thickness 36 in.) El -9'-8" → El 1'-7"			
Outside Face	#10@6" (0.588)	#10@6" (0.588)	Not Req'd
Inside Face	#10@6" (0.588)	#10@6" (0.588)	

Notes:

1. ( ) Indicates reinforcement to concrete ratio in terms of a percentage.
2. Load combination indicated includes all permutations of this load case combination.

Table 3.8.4-20 Typical Reinforcement in ESWPC Interior Wall – SECTION 2

	Provided Reinforcement		
	Vertical	Horizontal	Shear
Wall Zone 1 (Concrete Thickness 24 in.) El -9'-8" → El 1'-7"			
Outside Face	#10@6" (0.882)	#10@6" (0.882)	Not Req'd
Inside Face	#10@6" (0.882)	#10@6" (0.882)	

Notes:

1. ( ) Indicates reinforcement to concrete ratio in terms of a percentage.
2. Load combination indicated includes all permutations of this load case combination.

MIC-03-03-00057

Table 3.8.4-21 Typical Reinforcement in ESWPC Floor at Elevation -15'-8" – AREA 1

	Provided Reinforcement		
	Vertical	Horizontal	Shear
Area 1 (Concrete Thickness 24 in.) El -15'-8"			
Each Face	#9@6" (0.694)	#9@6" (0.694)	Not Req'd

Notes:

1. ( ) Indicates reinforcement to concrete ratio in terms of a percentage.
2. Load combination indicated includes all permutations of this load case combination.

MIC-03-03-00057

Table 3.8.4-22 Dynamic + Static Lateral Earth Pressures and Passive Earth Pressures

Elevation (ft)	Depth (ft)	Dynamic + Static Pressure (ksf)	Total Passive Pressure (ksf)
2.58	0.00	3.25	1.66
-3.00	5.58	4.19	4.23
-5.87	8.45	4.53	5.56
-8.58	11.16	4.79	6.81
-14.32	16.90	5.17	9.46
-15.58	18.16	5.24	10.04
-20.96	23.54	5.48	12.52
-22.77	25.35	5.55	13.35
-26.34	28.92	5.64	15.00
-33.01	35.59	5.63	18.08
-39.67	42.25	5.17	21.15

Table 3.8.5-1 Load Combinations and Required Minimum Factors of Safety for Stability of Seismic Category I ~~Concrete Basemats~~and II Structures MIC-03-03-00057

Load Combination	Overturning (FS_{ot})	Sliding (FS_{sl})	Flotation (FS_{fl})
$D + H + W$	1.5	1.5	N/A
$D + H + E_s$	1.1	1.1	N/A
$D + H + W_t$	1.1	1.1 (See note 1)	N/A
$D + F_b$	N/A	N/A	1.1

MIC-03-03-00057

Note 1: Psuedo-static analyses result in a factor of safety less than 1.1 during short time intervals. More realistic non-linear sliding analyses are performed to evaluate sliding during a design-basis earthquake. All input motions in the non-linear sliding analyses are conservatively amplified by 1.1. The maximum sliding displacements are included in the design of structures, systems, components and equipment, where applicable. MIC-03-03-00057

Table 3.8.5-2 Concrete Properties

Part		Compressive Strength f'c	Modulus of Elasticity Ec(1)	Poisson's Ratio υ	Thermal Expansion Coefficient α	Unit Weight γ	
PCCV		7,000 psi	4,769 ksi	0.17	~~0.99×10^{-5}/°C~~ 5.5×10^{-6}/°F	150lb/ft^3	MIC-03-03-00057
Containment Internal Structure		4,000 psi	3,605 ksi	0.17	~~0.99×10^{-5}/°C~~ 5.5×10^{-6}/°F	150lb/ft^3	MIC-03-03-00057
R/B		5~~4~~,000 psi	~~3,605~~4,031 ksi	0.17	~~0.99×10^{-5}/°C~~ 5.5×10^{-6}/°F	150lb/ft^3	MIC-03-03-00057 MIC-03-06-00073
Basemat	Peripheral	5~~4~~,000 psi	~~3,605~~4,031 ksi	0.17	~~0.99×10^{-5}/°C~~ 5.5×10^{-6}/°F	150lb/ft^3	MIC-03-03-00057
Basemat	Upper part of Tendon Gallery	7,000 psi	4,769 ksi	0.17	~~0.99×10^{-5}/°C~~ 5.5×10^{-6}/°F	150lb/ft^3	MIC-03-03-00057

NOTE :

1. 1. Ec=57,000(Fc)$^{1/2}$ psi (ACI 349-06, 8.5.1) MIC-03-03-00066

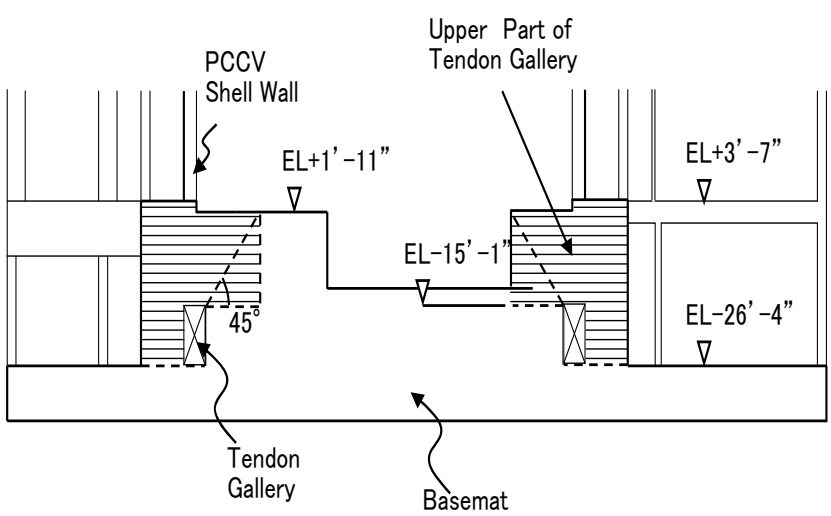

MIC-03-03-00057

Table 3.8.5-4 Section Thickness and Reinforcement Ratios of ~~Basemat Used in the R/B, PCCV, Containment Internal Structure~~R/B Complex Basemat Evaluation (Sheet 1 of 2)

Location	Thickness (in)	Primary Reinforcement					Shear Tie		Control Load Case[7]
		Position	Direction 1*		Direction 2*				
			Arrange-ment	Ratio (%)	Arrange-ment	Ratio (%)	Arrange-ment	Ratio (%)	
Upper Part of Tendon Gallery[1]	2204 (178'-8")	Top	24-#18@2° +24-#18@2° +12-#18@2°	0.28063	41-#14@12" C +2-#18@12" C	0.33542	2-#11/2°@ 12"	0.8413	Abnormal/ Extreme[7] Construction
		Bottom	2-#148@2° +2-#148@2°	0.12625	3-#14@12"	0.2851			
Lower Part of Tendon Gallery[2]	12460 (103'-4")	Top	23-#14@2° +23-#14@2°	0.2728	2-#14@12"	0.23302	2-#11/2°@ 24"	0.4206	Abnormal / Extreme[7] Test[7]
		Bottom	3-#148@12"	0.45463	31-#14@12" +3-#18@12"	0.4574			
Lower Part of Cavity[3]	285326 (237'-92")	Top	2-#14@12" +3/4" LP	0.13235	2-#14@12" +3/4" LP	0.13235	#10@24"× 24"	0.220	Test[7] Abnormal/ Extreme[7]
		Bottom	3-#148@12"	0.3197	3-#148@12"	0.19731			
Inside Secondary Shield Wall of PCCV mat[4]	45899 (3841'-27")	Top	31-#14@12" +2-#18@12" +1/4" LP	0.12322	31-#14@12" +2-#18@12" +1/4" LP	0.12322	#10@24"× 24"	0.220	Abnormal/ Extreme[7] Test
		Bottom	3-#148@12"	0.12320	3-#148@12"	0.12320			
Outside Secondary Shield Wall of PCCV mat[5]	47899 (3941'-107")	Top	24-#18@2° +24-#18@2° +12-#18@2°	0.12725	41-#14@12" +3-#18@12"	0.15720	#10@12"× 24"	0.44122	Abnormal/ Extreme[7] Construction Abnormal 1.5Pa[7]
		Bottom	3-#148@12" +1-#14@12"	0.15720	31-#14@12" +13-#148@12"	0.15725			
Outside Secondary Shield Wall of PCCV mat[5a]	47899 (3941'-107")	Top	24-#18@2° +24-#18@2° +12-#18@2°	0.12722	41-#14@12" +3-#18@12"	0.15720	#10@24"× 24"	0.22044	Abnormal/ Extreme[7] Test[7]
		Bottom	3-#148@12" +1-#14@12"	0.15720	31-#14@12" +13-#148@12"	0.15725			
Other than Containment Basemat[6] Peripheral Areas	11960 (913'-114")	Top	2-#14@12"	0.2315	2-#14@12"	0.2315	#9@36"× 36"	0.07722	Load Case 6[7] Abnormal / Extreme
		Bottom	2-#14@12"	0.2315	2-#14@12"	0.2315			
Other than Containment Basemat[6a] Peripheral Areas	11960 (913'-114")	Top	2-#14@12"	0.2315	2-#14@12"	0.2315	#10@12"× 12"	0.8882	Load Case 4[7] Abnormal / Extreme
		Bottom	23-#148@12"	0.6315	2-#14@12"	0.2315			

Table 3.8.5-4 Section Thickness and Reinforcement Ratios of ~~Basemat Used in the R/B, PCCV, Containment Internal Structure~~R/B Complex Basemat Evaluation (Sheet 2 of 2) MIC-03-03-00057

~~Other than Containment Basemat[6b]~~Peripheral Areas	1~~19~~60 (~~9~~13'-~~11~~4")	Top	2-#14@12"	0.23~~15~~	2-#14@12"	0.23~~15~~	#10@24"× 24"	0.220	~~Load Case 4[7]~~ Construction
		Bottom	2-#14@12"	0.23~~15~~	2-#14@12"	0.23~~15~~			

Note :

1 Upper Part of Tendon Gallery	Direction 1: Radial, Direction 2: Circumferential
2 Lower Part of Tendon Gallery	Direction 1: Top: Radial, Bottom: N-S + Circumferential Direction 2: Top: Circumferential, Bottom: E-W + Circumferential
3 Lower Part of Cavity	Direction 1: N-S, Direction 2: E-W
4 Inside Secondary Shield Wall	Direction 1: N-S, Direction 2: E-W
5, 5a Outside Secondary Shield Wall	Direction 1: Top: Radial, Bottom: N-S + Circumferential Direction 2: Top: Circumferential, Bottom: E-W + Circumferential
6, 6a, 6b Other than PCCV Basemat	Direction 1: N-S, Direction 2: E-W

7 For the controlling load cases of locations 1 through ~~5a~~6b, see DCD Table 3.8.1-2. ~~For controlling load cases of locations 6 through 6b, see DCD Table 3.8.4-3.~~ MIC-03-03-00057

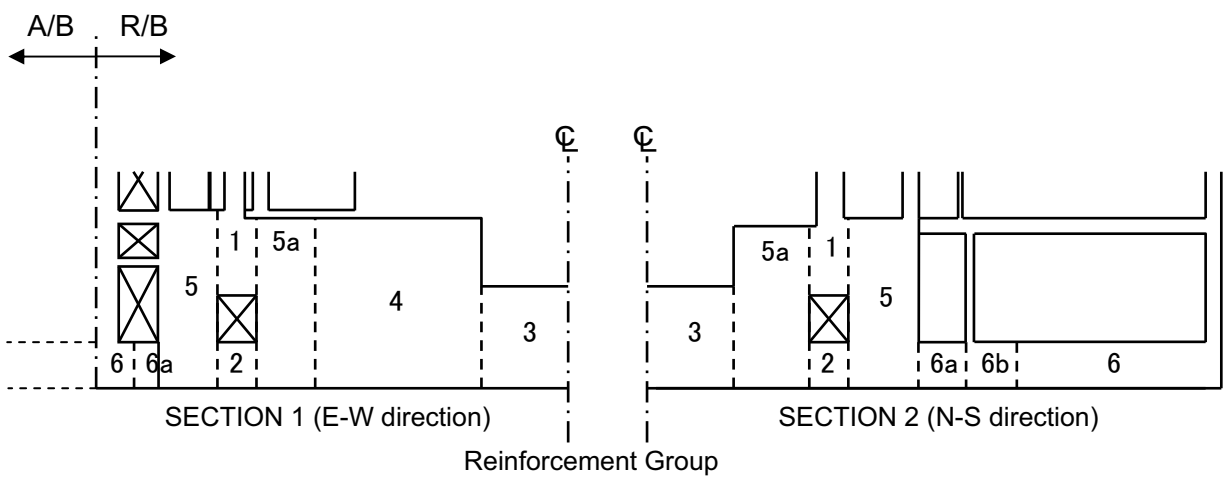

MIC-03-03-00057

Table 3.8.5-5 ~~Typical Reinforcement in PS/B Basemat~~Deleted

	~~Provided Reinforcement~~		
	~~NS Dir.~~	~~EW Dir.~~	~~Shear~~
~~Concrete Thickness 119 in.~~			
~~Control Load Combination Case~~	~~None~~ ~~(Minimum Requirement)~~	~~None~~ ~~(Minimum Requirement)~~	-
~~Top~~	~~#11@12"+#11@12"~~	~~#11@12"+#11@12"~~	-
~~Bottom~~	~~#11@12"+#11@12"~~	~~#11@12"+#11@12"~~	-

~~Note: ( ) shows the reinforcement ratio.~~

Table 3.8.5-6 Load Combinations and Calculated[(1)] Minimum Factors of Safety for Stability of Seismic Category I and II Structures MIC-03-03-00057

Building/ Structure	Load Combination	Overturning (FS_{ot})	Overturning (FS_{sl})	Overturning (FS_{ff})
R/B complex	$D + H + W$	>10	>10	N/A
	$D + H + E_s$	1.2	See Note 2.	N/A
	$D + H + W_t$	>10	>10	N/A
	$D + F_b$	N/A	N/A	3.8
T/B	$D + H + W$	*[Later]*	*[Later]*	N/A
	$D + H + E_s$	1.4	See Note 3.	N/A
	$D + H + W_t$	*[Later]*	*[Later]*	N/A
	$D + F_b$	N/A	N/A	1.9

Note 1: Factors of safety reported in this table may show values which have been conservatively rounded down from calculated values.

Note 2: Sliding analyses documented in Technical Report MUAP-12002 (Reference 3.8-82) have determined that sliding occurs. The maximum 0.75 in. sliding displacement, which has been conservatively rounded up, is utilized in conjunction with other structural displacements for the design of attached structures, piping and/or equipment, and evaluation of gaps between structures.

Note 3: Sliding analyses documented in Technical Report MUAP-12002 (Reference 3.8-82) have determined that sliding displacements occurs. The maximum 0.20 in. sliding displacement, which has been conservatively rounded up, is utilized in conjunction with other structural displacements for the design of attached structures, piping and/or equipment, and gaps between structures.

MIC-03-03-00057

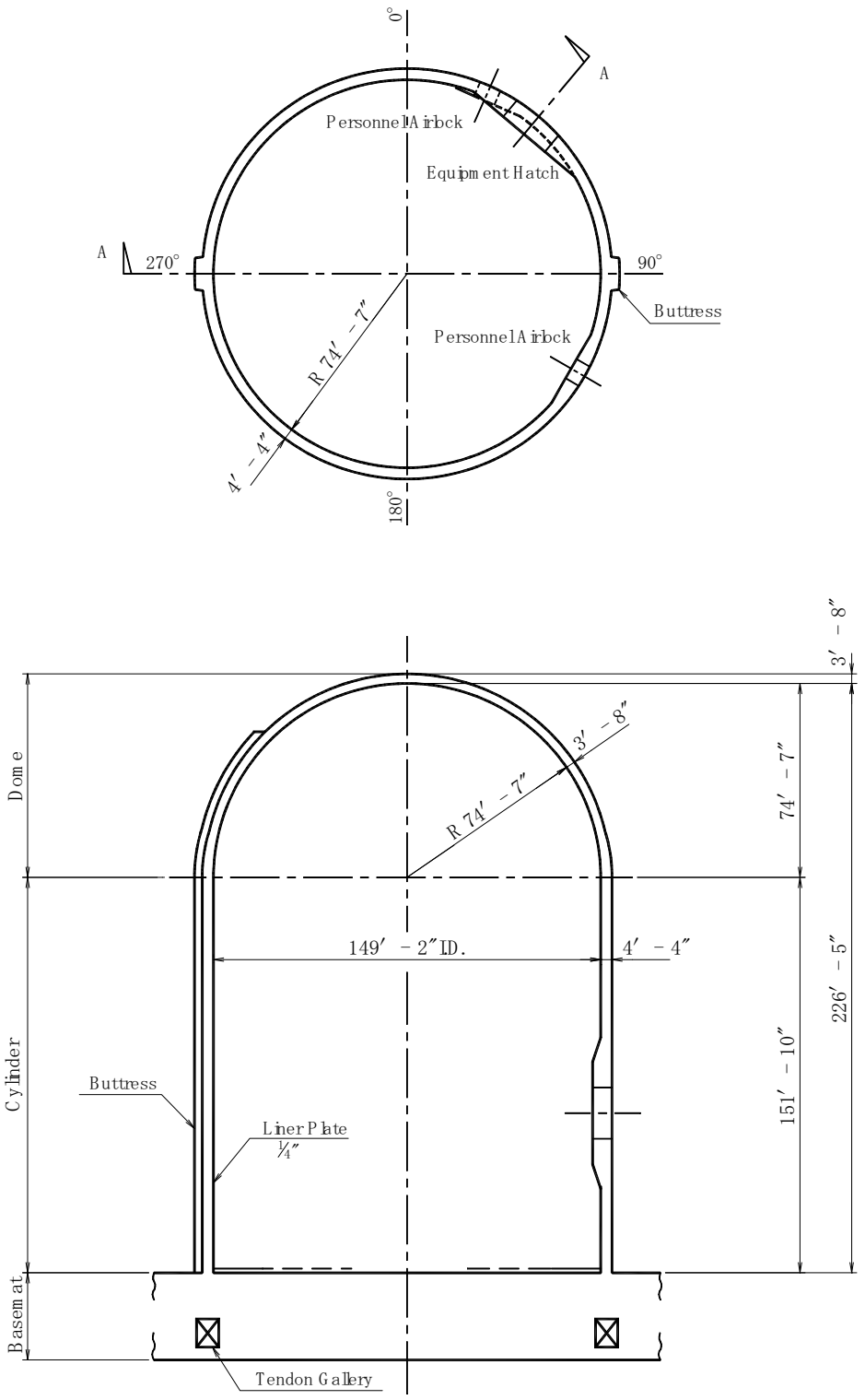

Figure 3.8.1-1 Configuration of PCCV (Sheet 1 of 3)

MIC-03-03-00057

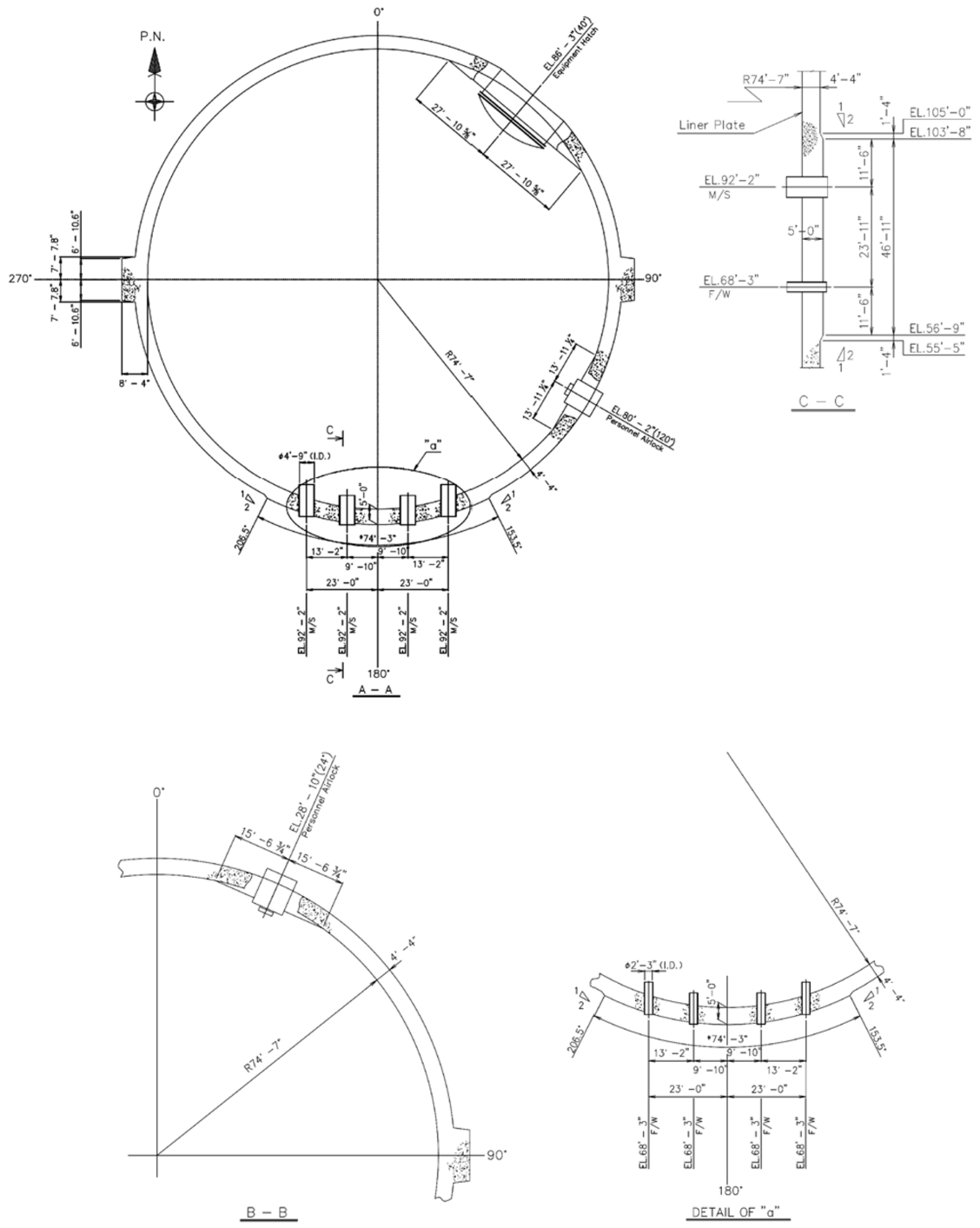

Figure 3.8.1-1 Configuration of PCCV (Sheet 3 of 3)

MIC-03-03-00057

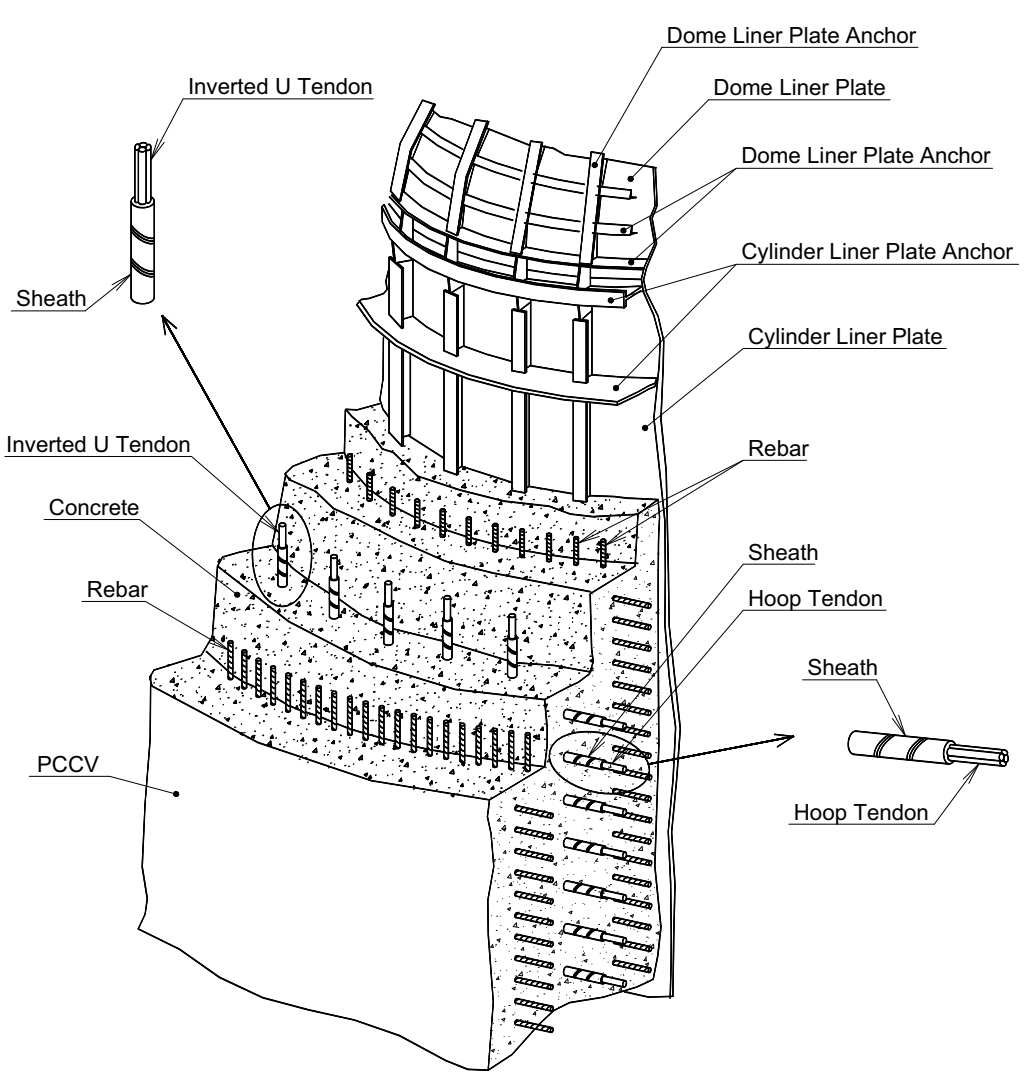

Figure 3.8.1-2 PCCV Schematic Reinforcing and Tendons

MIC-03-03-00057

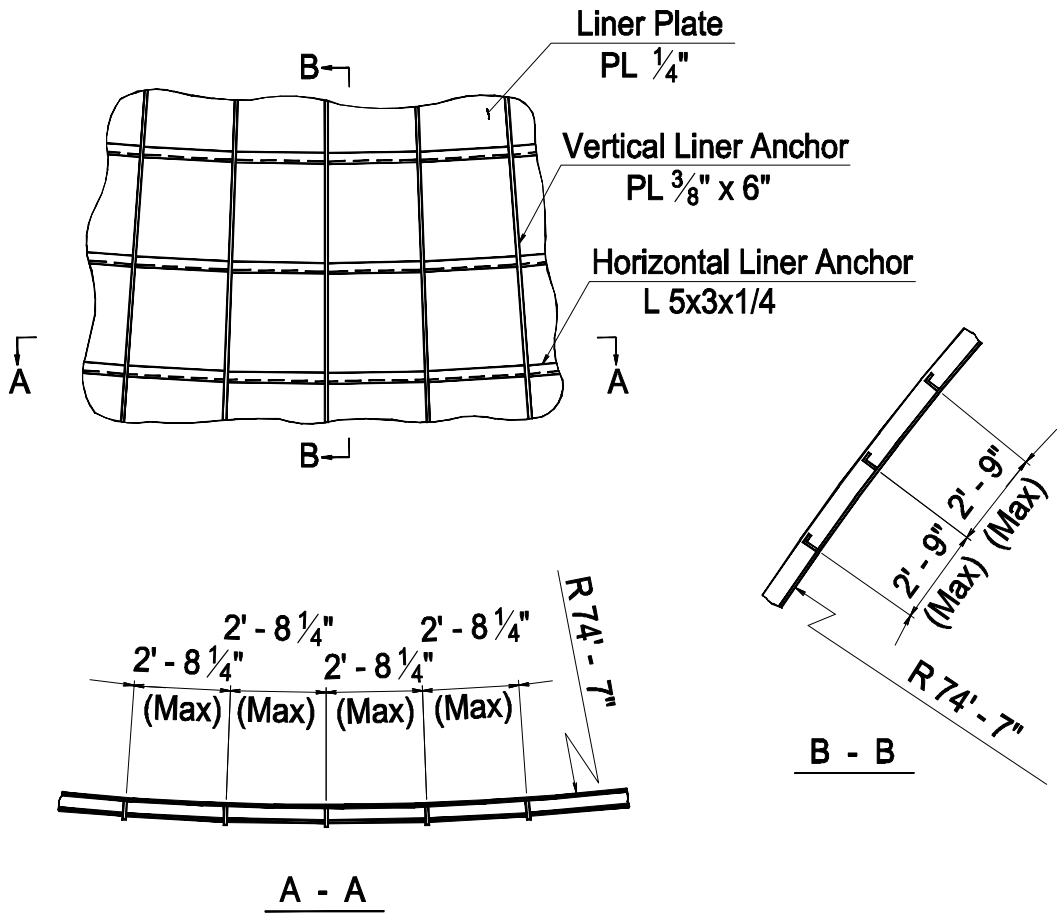

Figure 3.8.1-4 Liner Anchorage System for the Upper Portion of Dome

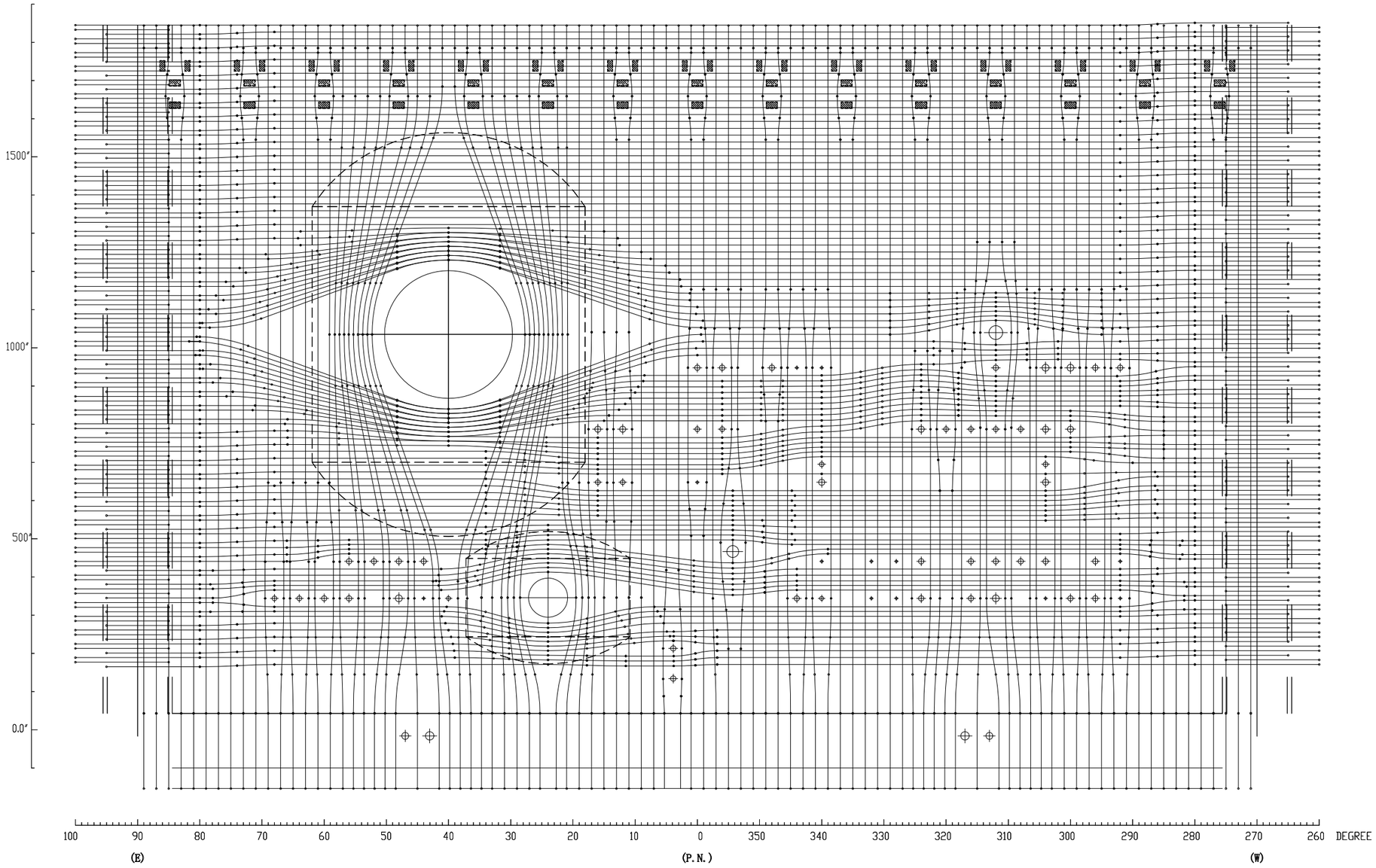

Figure 3.8.1-5 PCCV General Arrangement, Tendons and Reinforcing (Sheet 1 of ~~46~~19)

MIC-03-03-00057

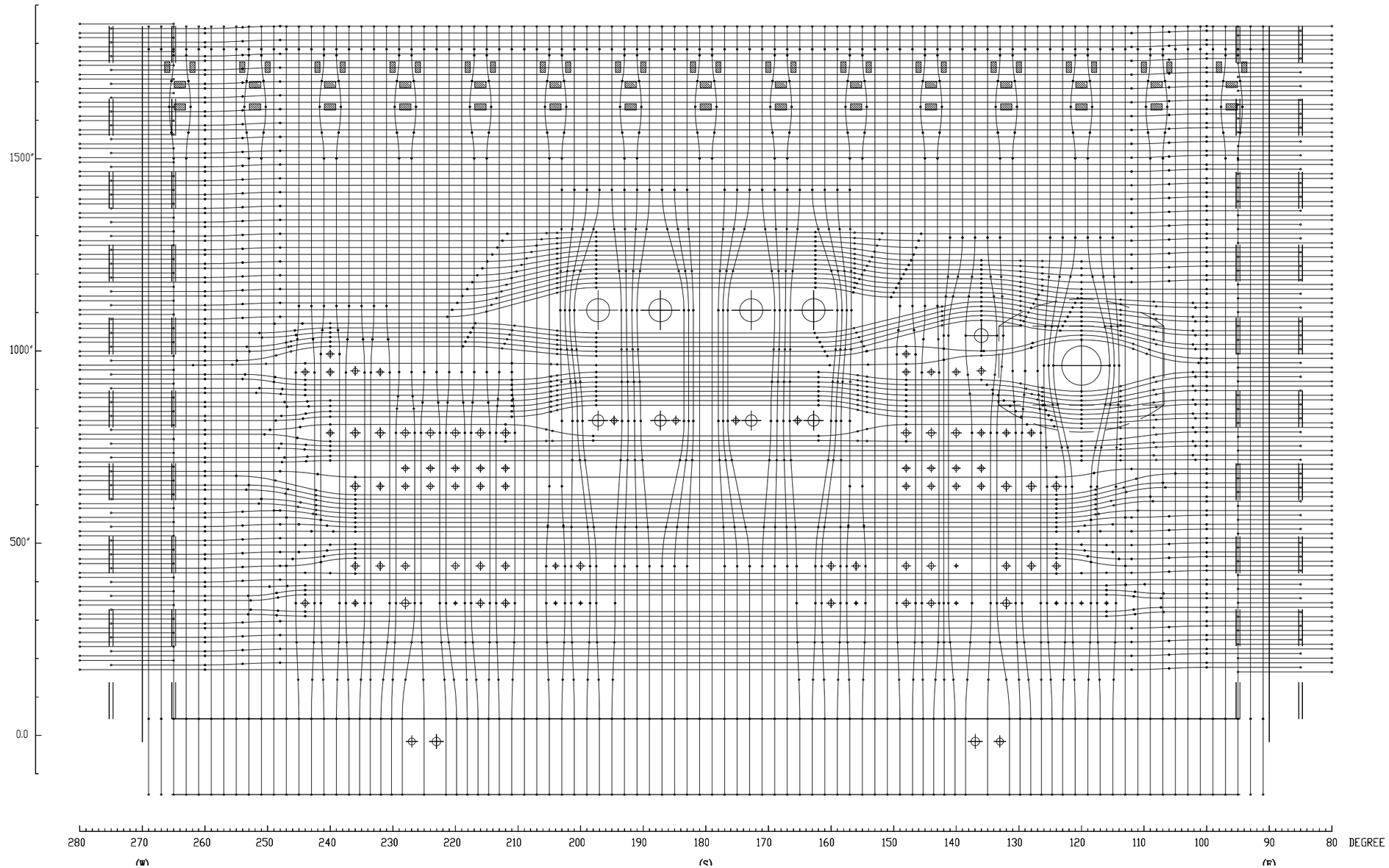

Figure 3.8.1-5 PCCV General Arrangement, Tendons and Reinforcing (Sheet 2 of ~~16~~19)

MIC-03-03-00057

MIC-03-03-00057

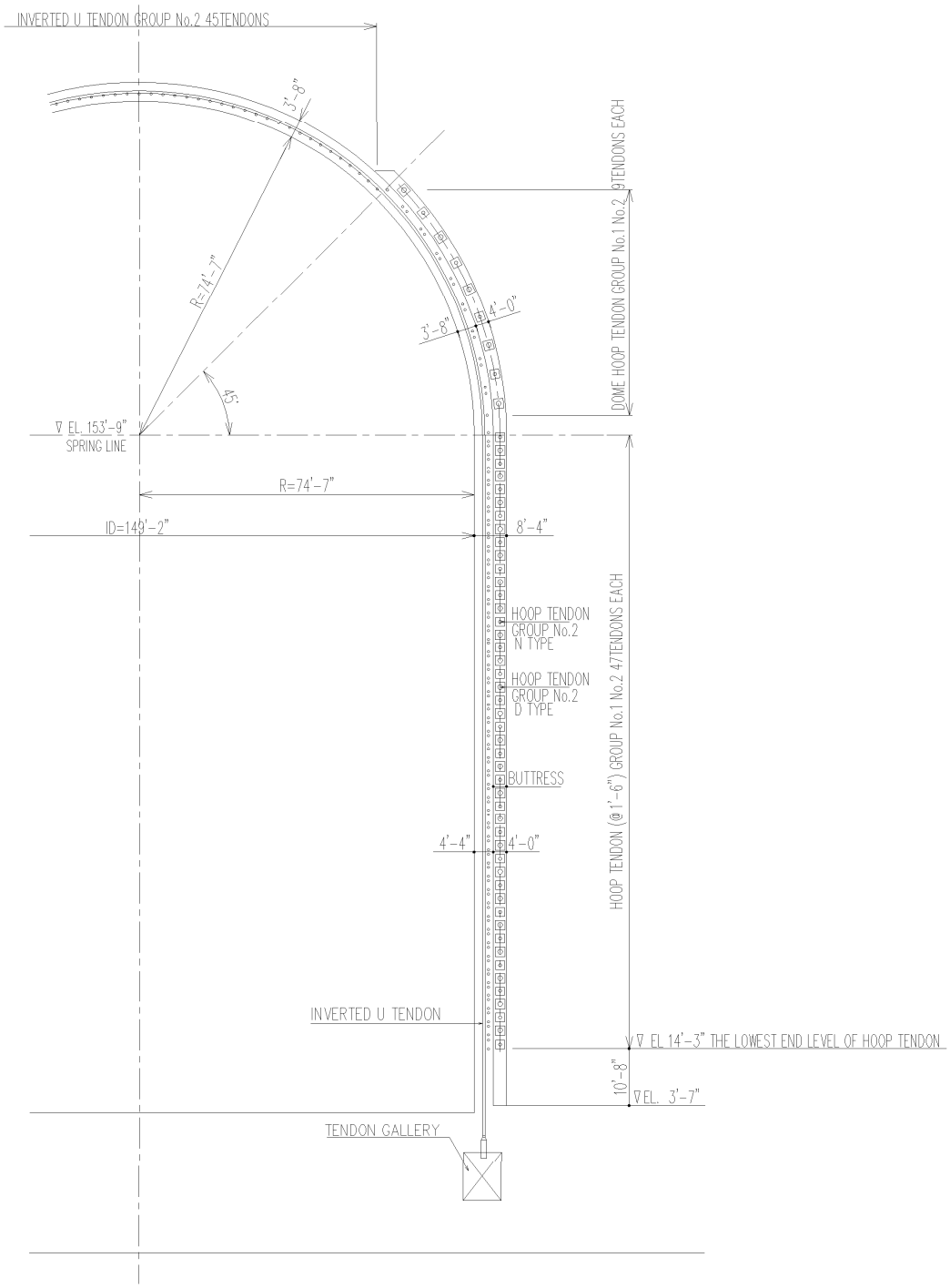

Figure 3.8.1-5 PCCV General Arrangement, Tendons and Reinforcing (Sheet 3 of ~~16~~19)

MIC-03-03-00057

MIC-03-03-00057

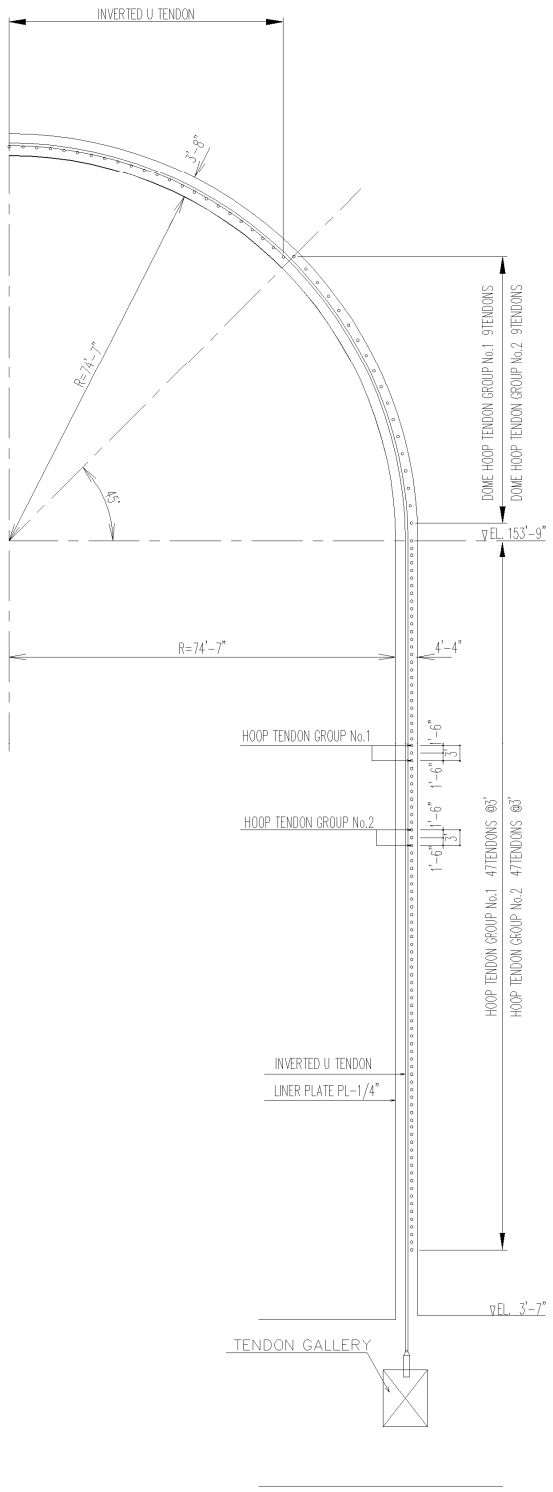

Figure 3.8.1-5 PCCV General Arrangement, Tendons and Reinforcing (Sheet 4 of ~~16~~19)

MIC-03-03-00057

MIC-03-03-00057

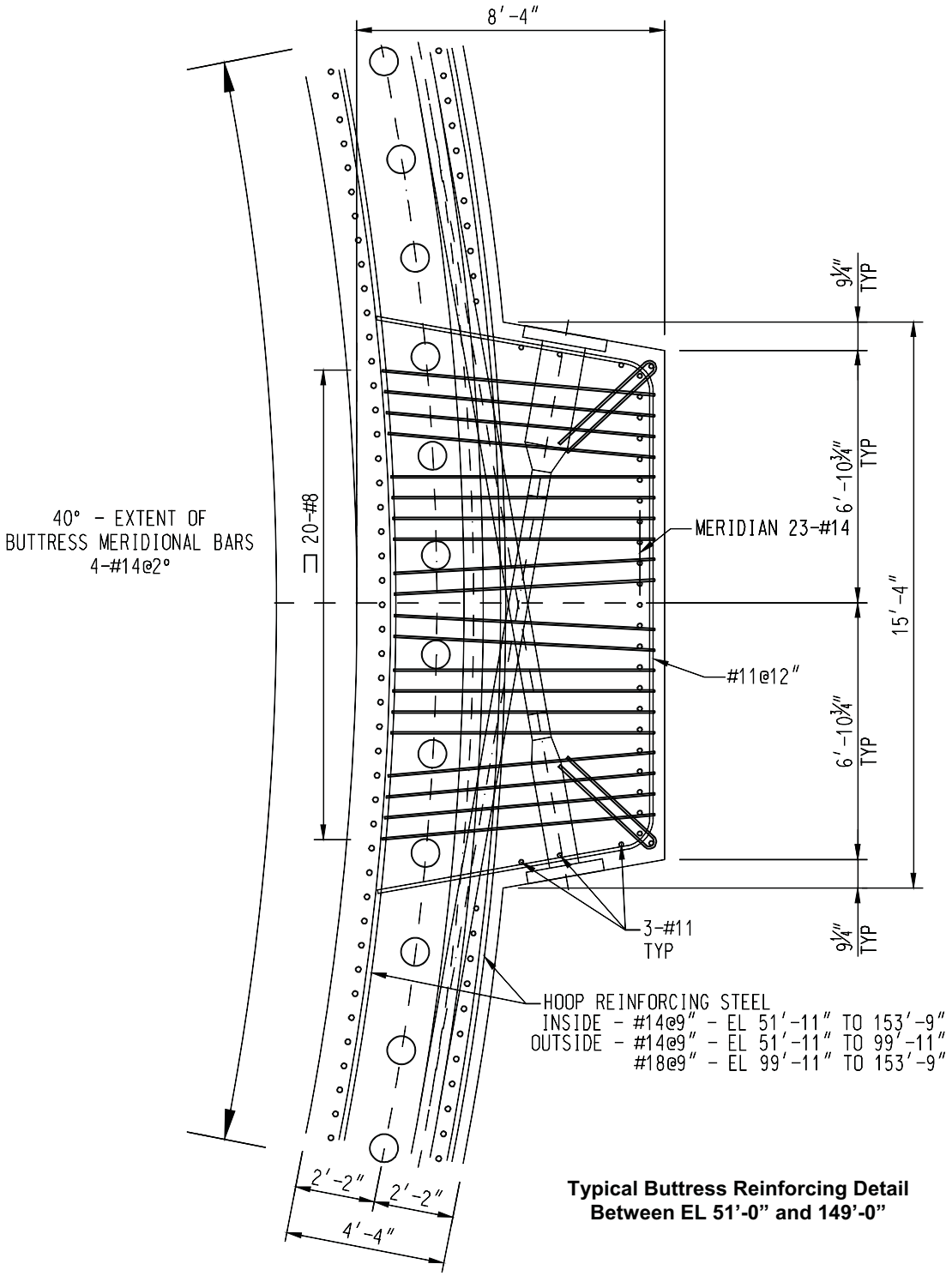

Typical Buttress Reinforcing Detail Between EL 51'-0" and 149'-0"

Figure 3.8.1-5 PCCV General Arrangement, Tendons and Reinforcing (Sheet 5 of ~~16~~19)

MIC-03-03-00057

MIC-03-03-00057

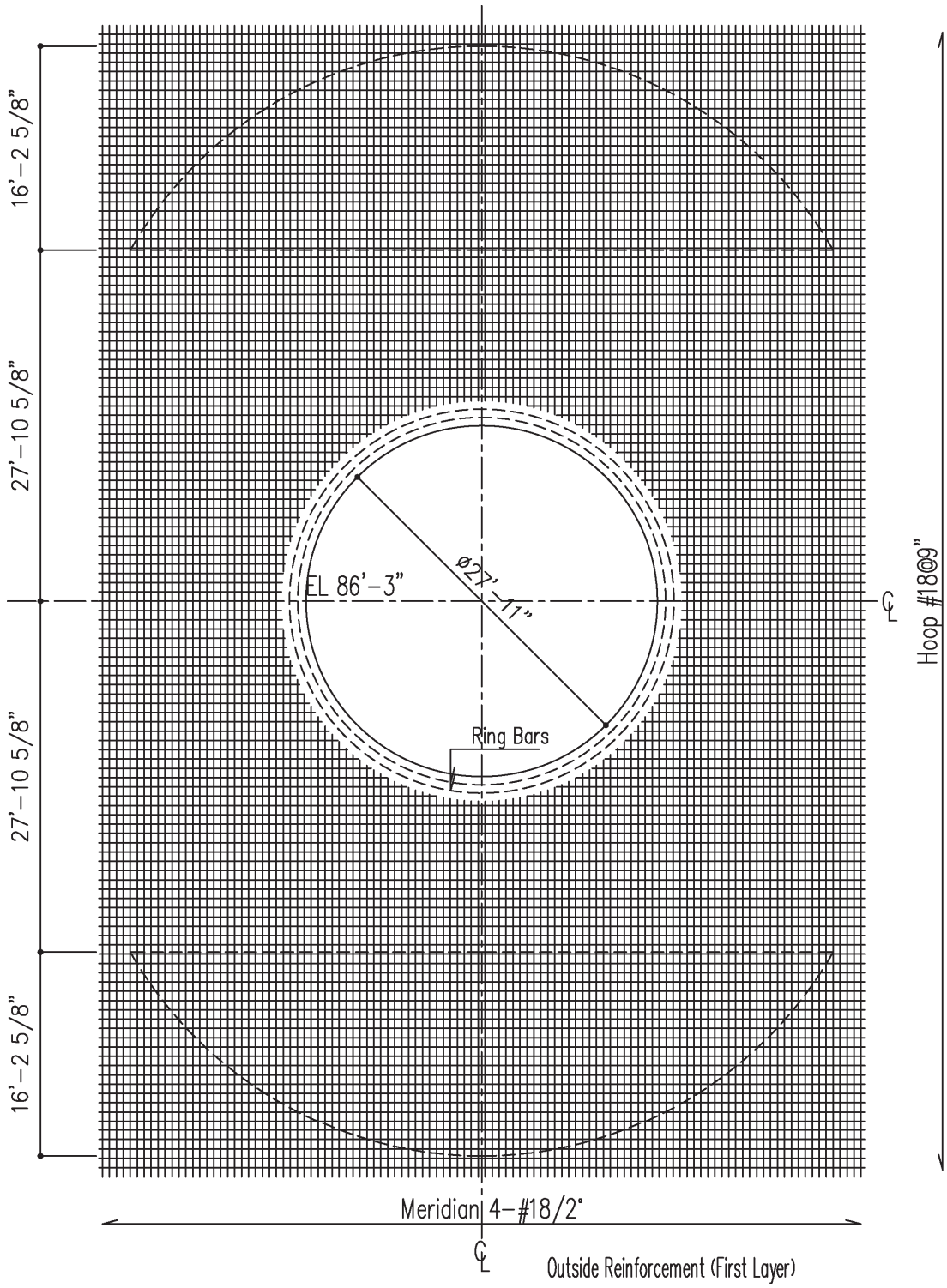

Figure 3.8.1-5 PCCV General Arrangement, Tendons and Reinforcing (Sheet 6 of ~~16~~19)

MIC-03-03-00057

MIC-03-03-00057

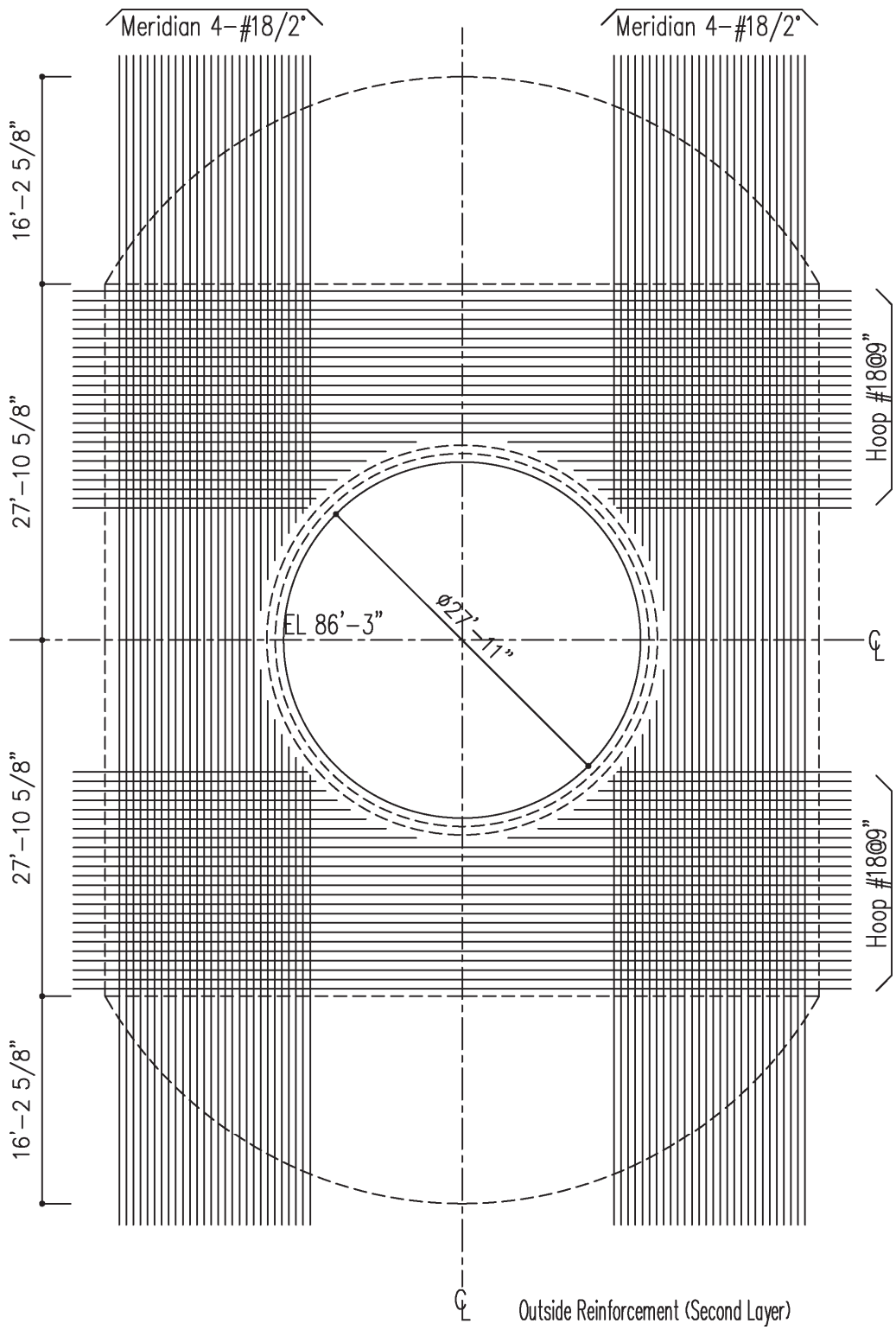

Figure 3.8.1-5 PCCV General Arrangement, Tendons and Reinforcing (Sheet 7 of ~~16~~19)

MIC-03-03-00057

MIC-03-03-00057

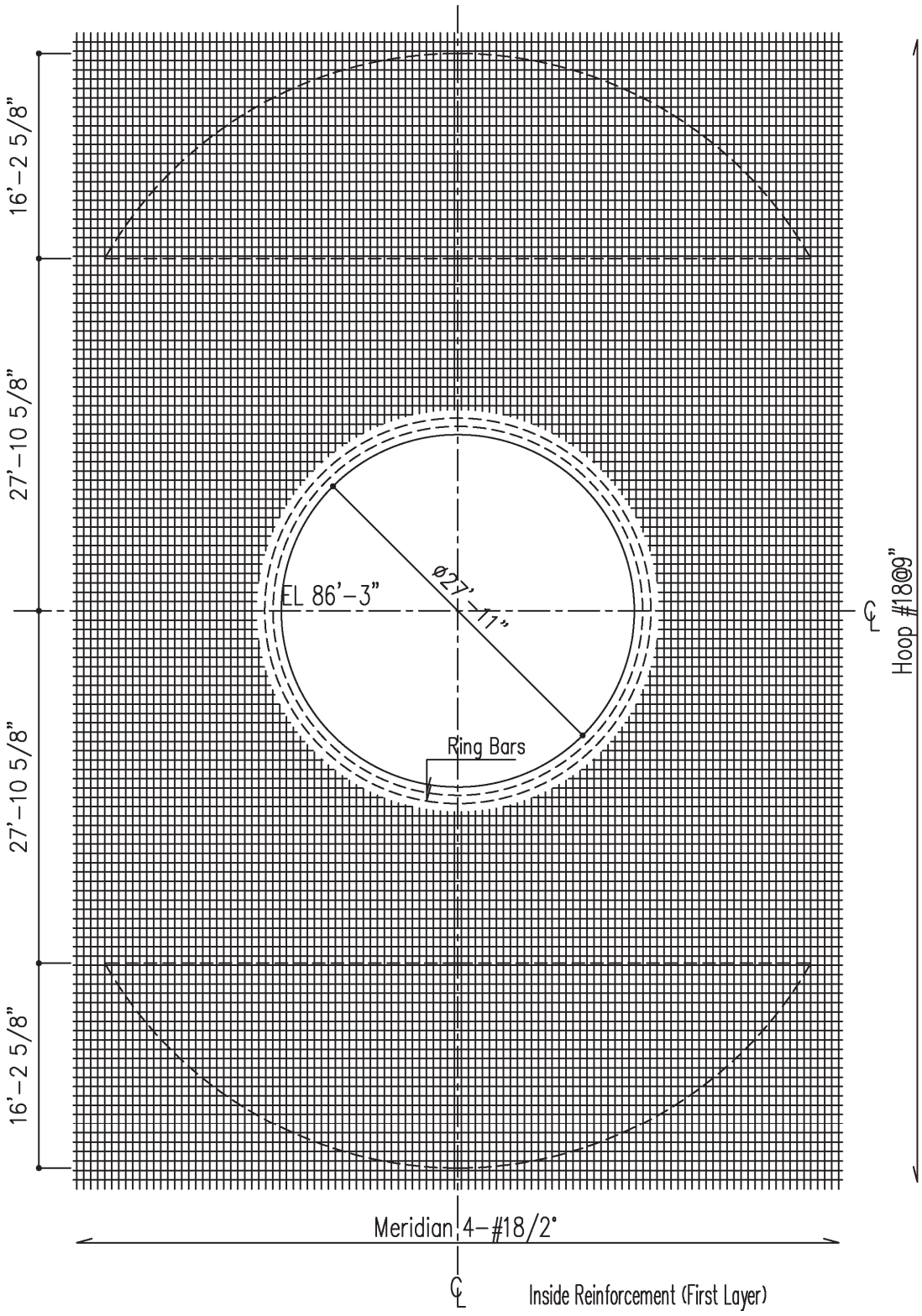

Figure 3.8.1-5 PCCV General Arrangement, Tendons and Reinforcing (Sheet 8 of ~~16~~19)

MIC-03-03-00057

MIC-03-03-00057

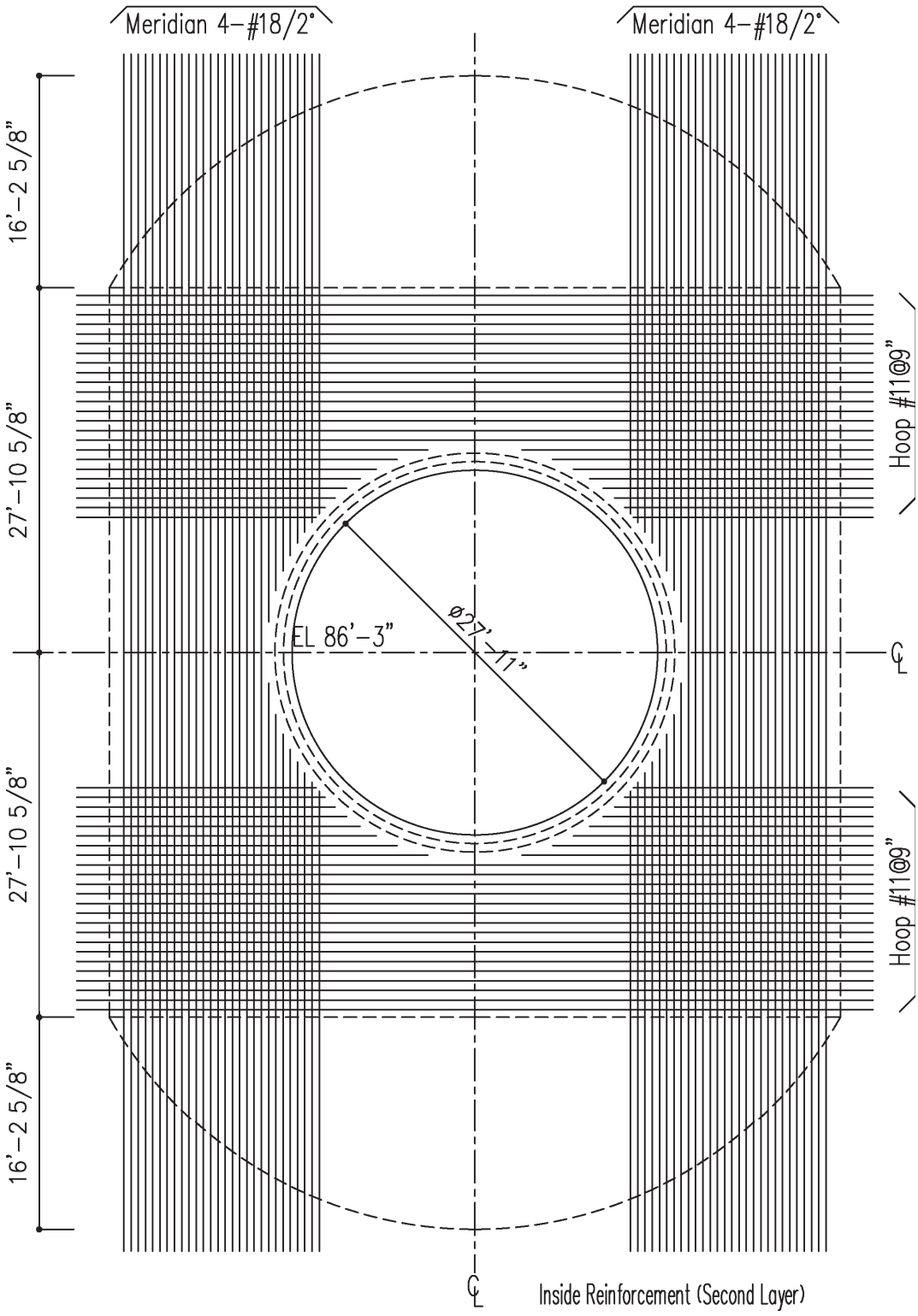

Figure 3.8.1-5 PCCV General Arrangement, Tendons and Reinforcing (Sheet 9 of ~~16~~19)

MIC-03-03-00057

MIC-03-03-00057

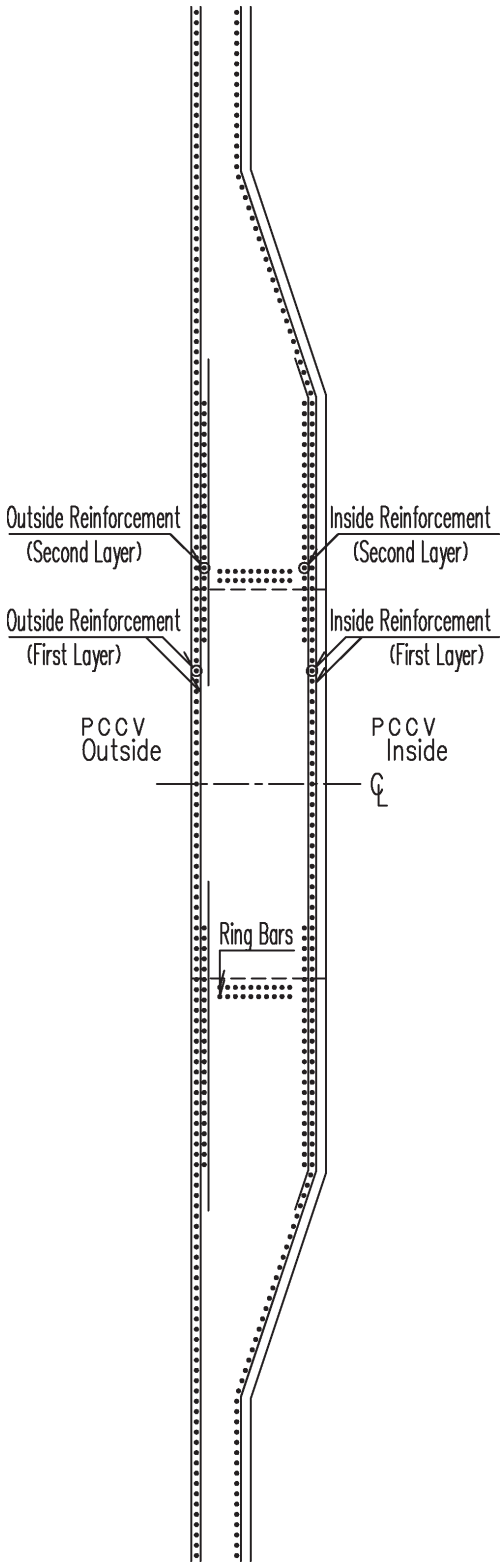

Figure 3.8.1-5 PCCV General Arrangement, Tendons and Reinforcing (Sheet 10 of ~~16~~19)

MIC-03-03-00057

MIC-03-03-00057

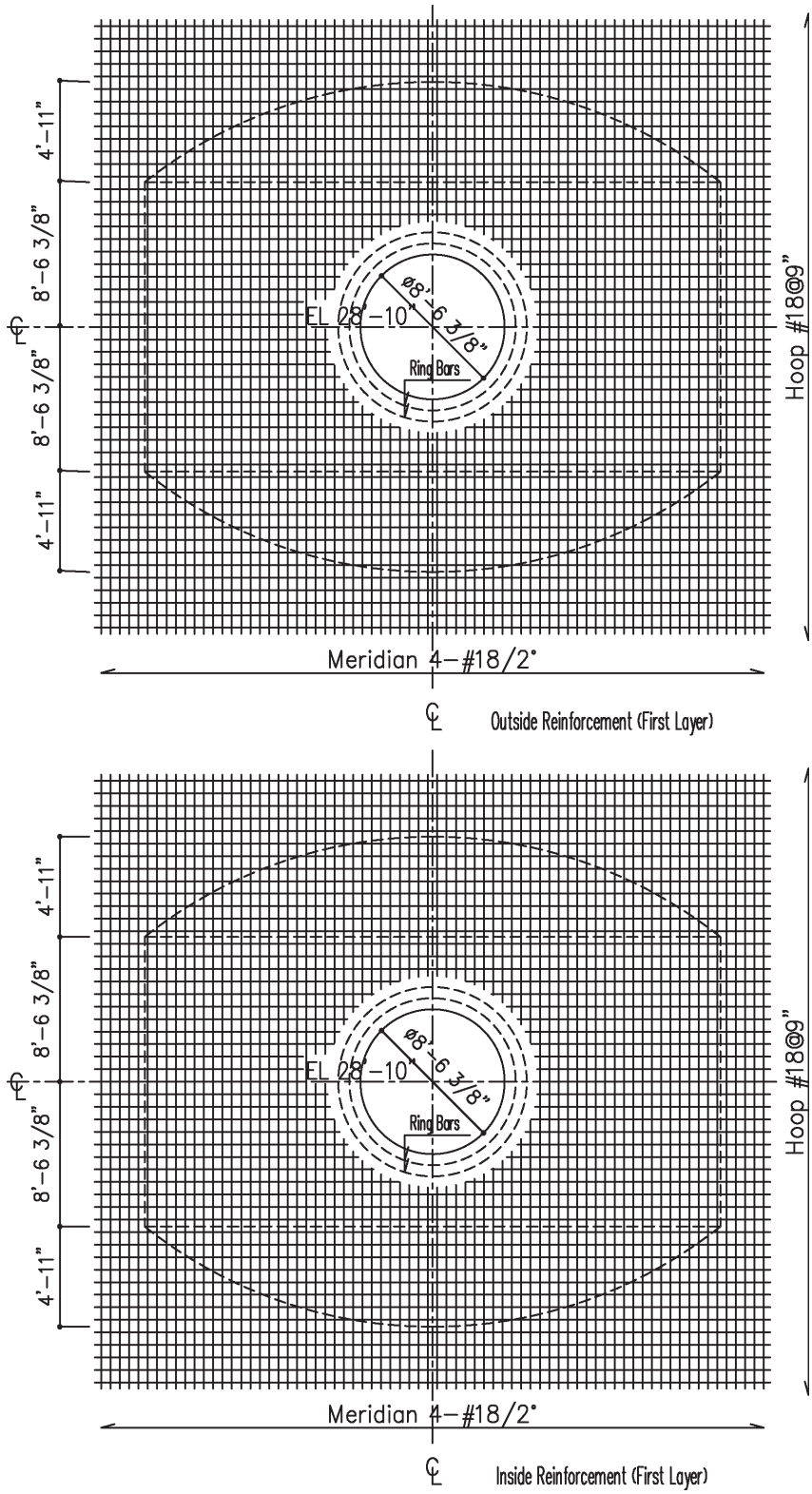

Figure 3.8.1-5 PCCV General Arrangement, Tendons and Reinforcing (Sheet 11 of ~~16~~19)

MIC-03-03-00057

MIC-03-03-00057

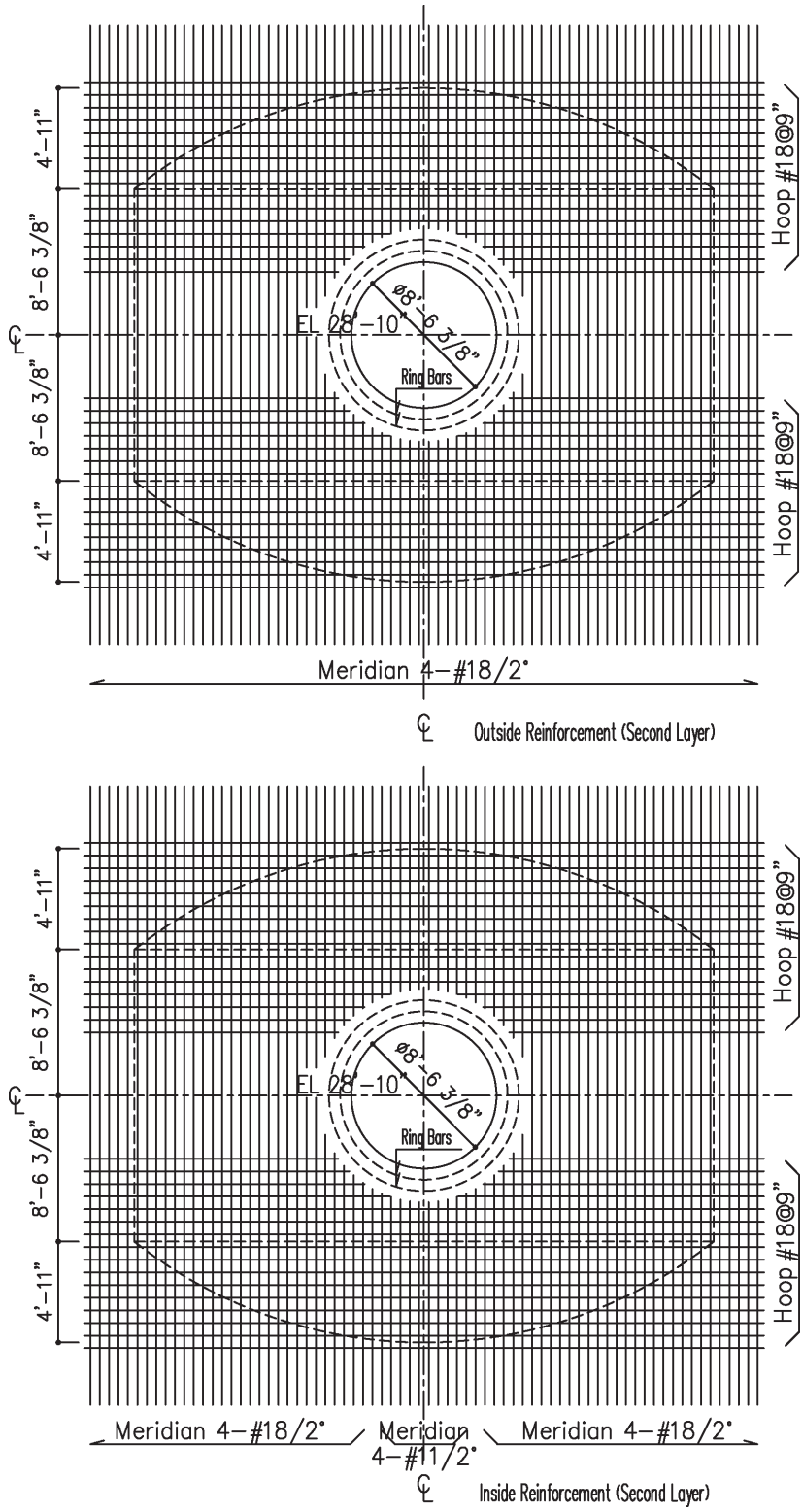

Figure 3.8.1-5 PCCV General Arrangement, Tendons and Reinforcing (Sheet 12 of ~~16~~19)

MIC-03-03-00057

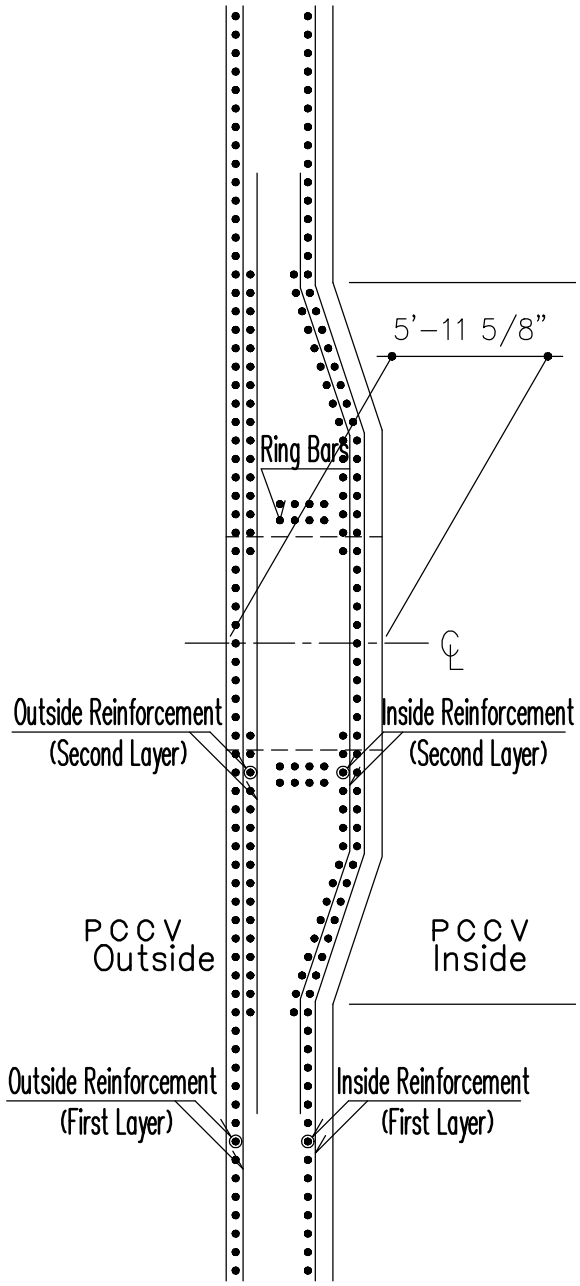

KEY SECTION

A/L1 Section

Figure 3.8.1-5 PCCV General Arrangement, Tendons and Reinforcing (Sheet 13 of ~~16~~19)

MIC-03-03-00057

MIC-03-03-00057

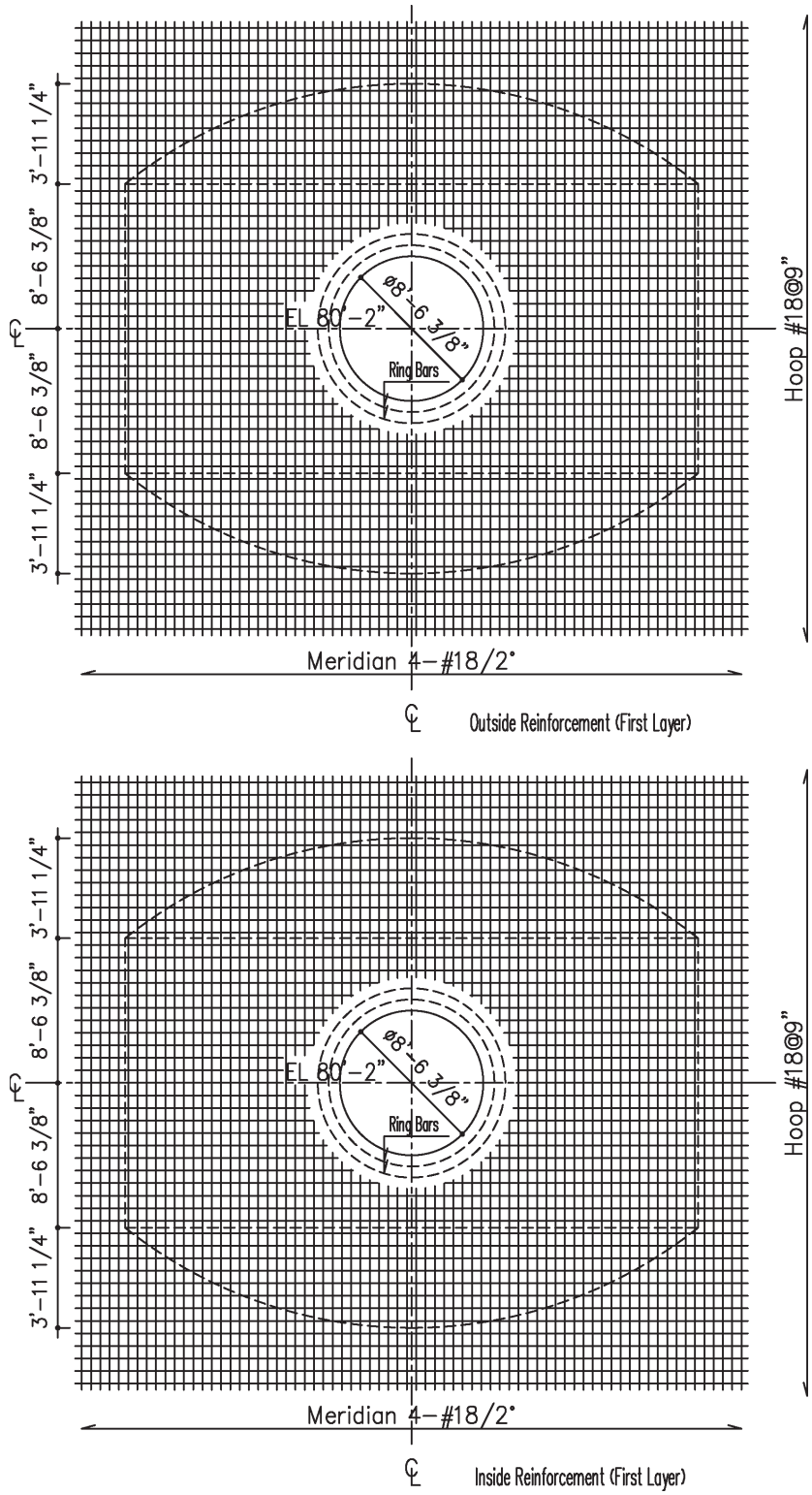

Figure 3.8.1-5 PCCV General Arrangement, Tendons and Reinforcing (Sheet 14 of ~~16~~19)

MIC-03-03-00057

MIC-03-03-00057

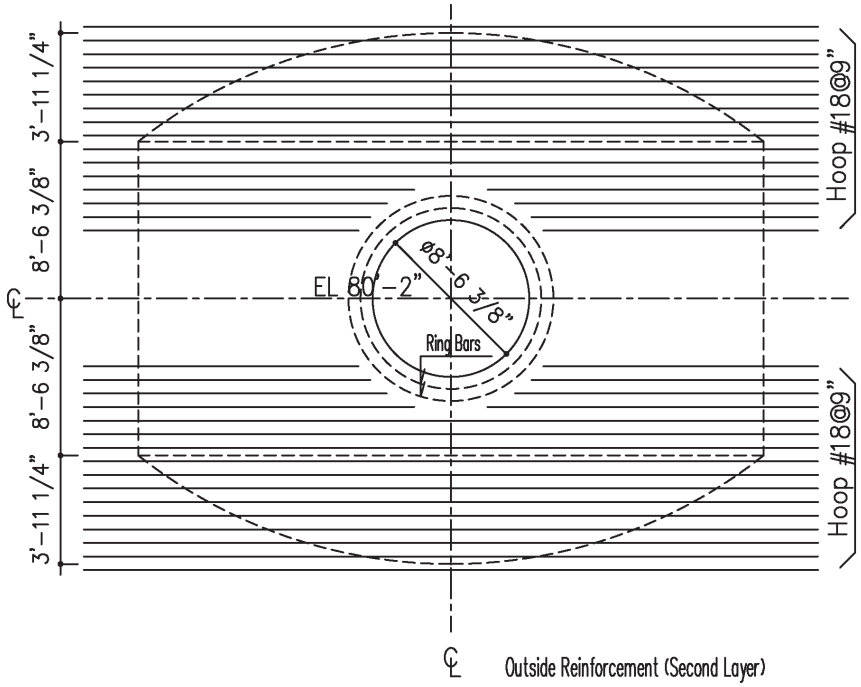

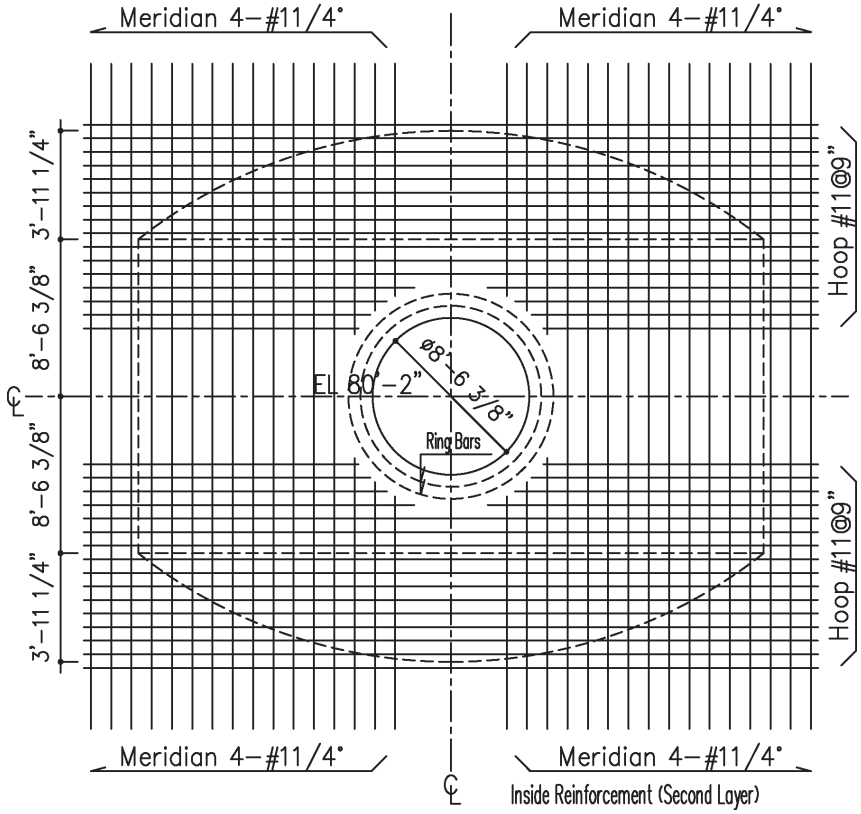

Figure 3.8.1-5 PCCV General Arrangement, Tendons and Reinforcing (Sheet 15 of ~~16~~19)

MIC-03-03-00057

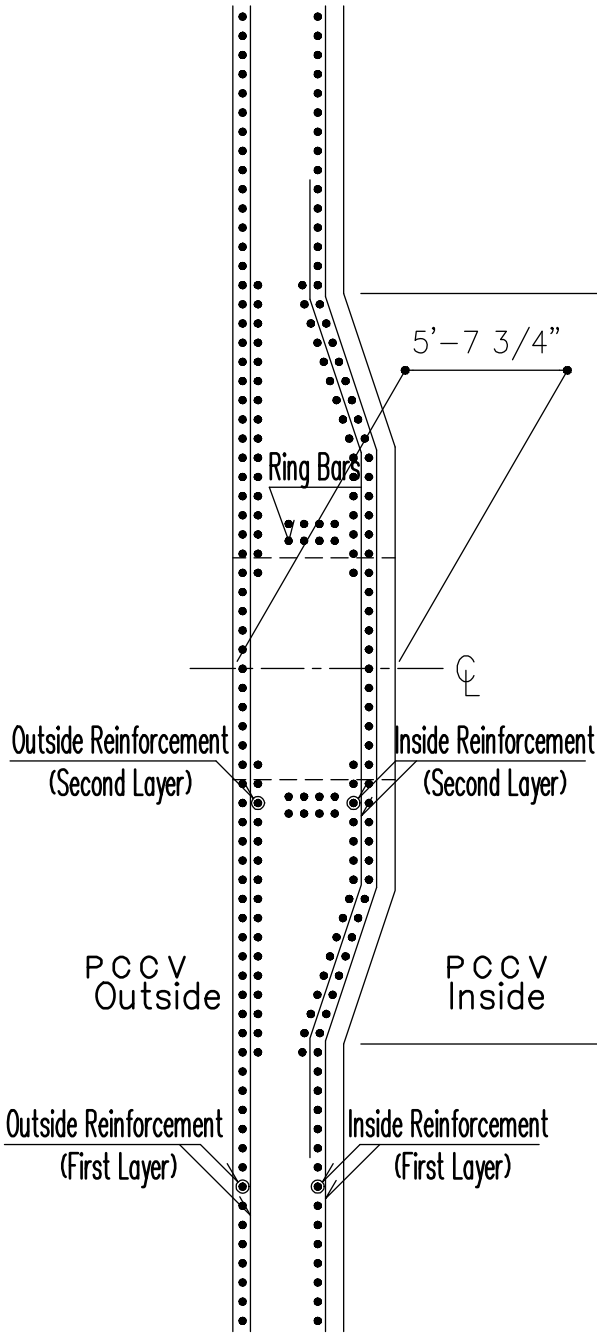

KEY SECTION

A/L2 Section

Figure 3.8.1-5 PCCV General Arrangement, Tendons and Reinforcing (Sheet 16 of ~~16~~19)

MIC-03-03-00057

MIC-03-03-00057

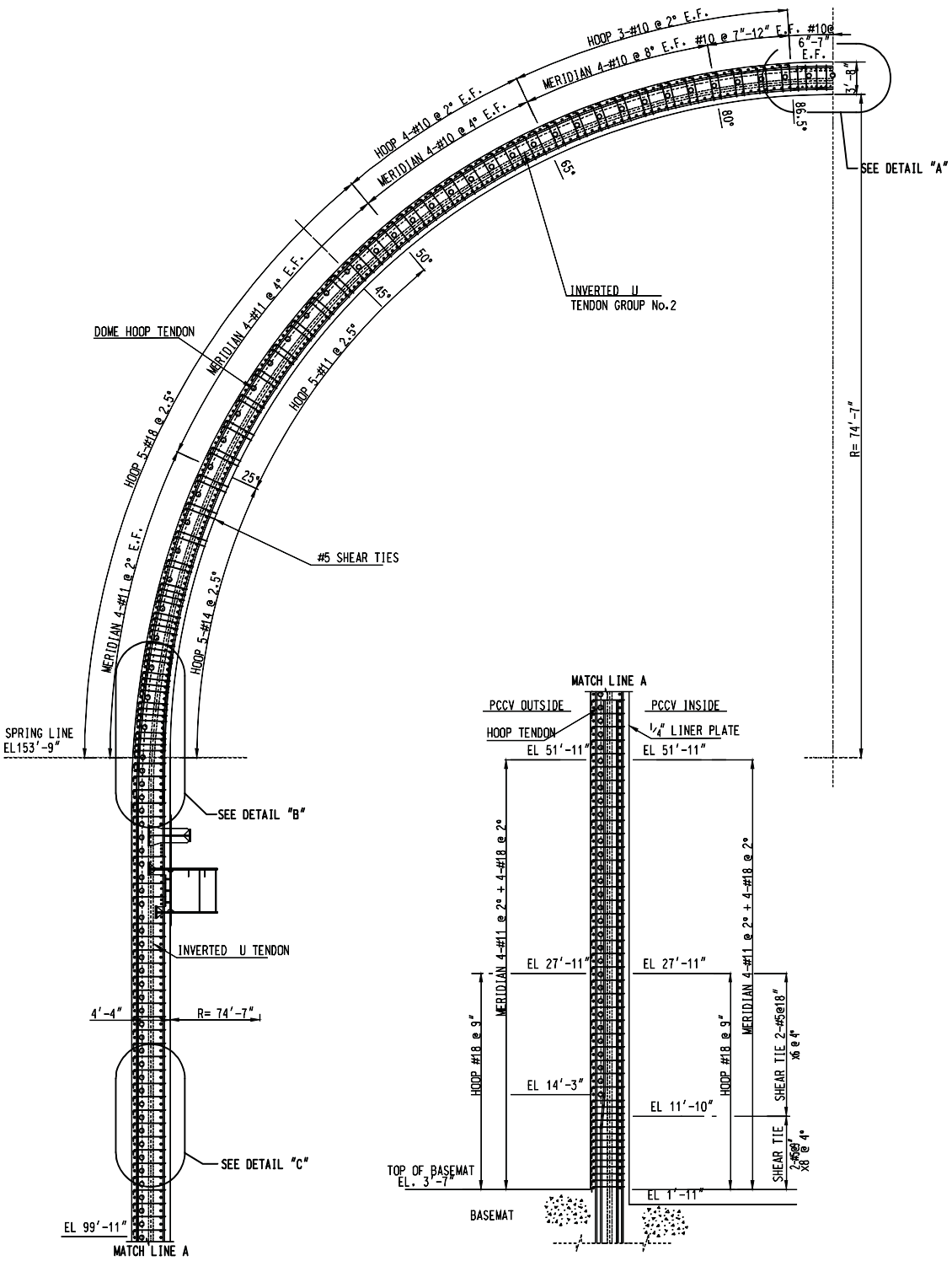

Figure 3.8.1-5 PCCV General Arrangement, Tendons and Reinforcing (Sheet 17 of 19)

MIC-03-03-00057

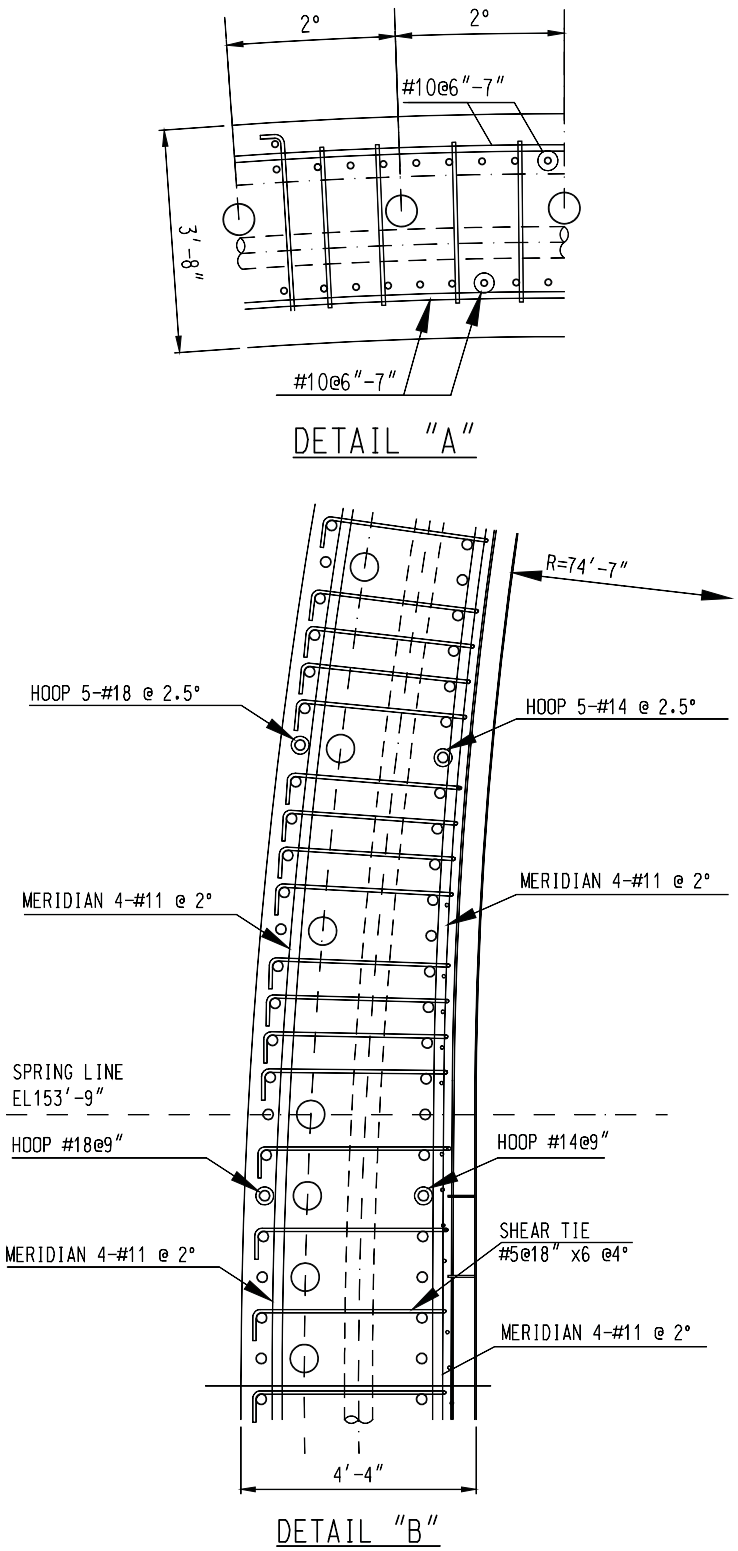

Figure 3.8.1-5 PCCV General Arrangement, Tendons and Reinforcing (Sheet 18 of 19)

MIC-03-03-00057

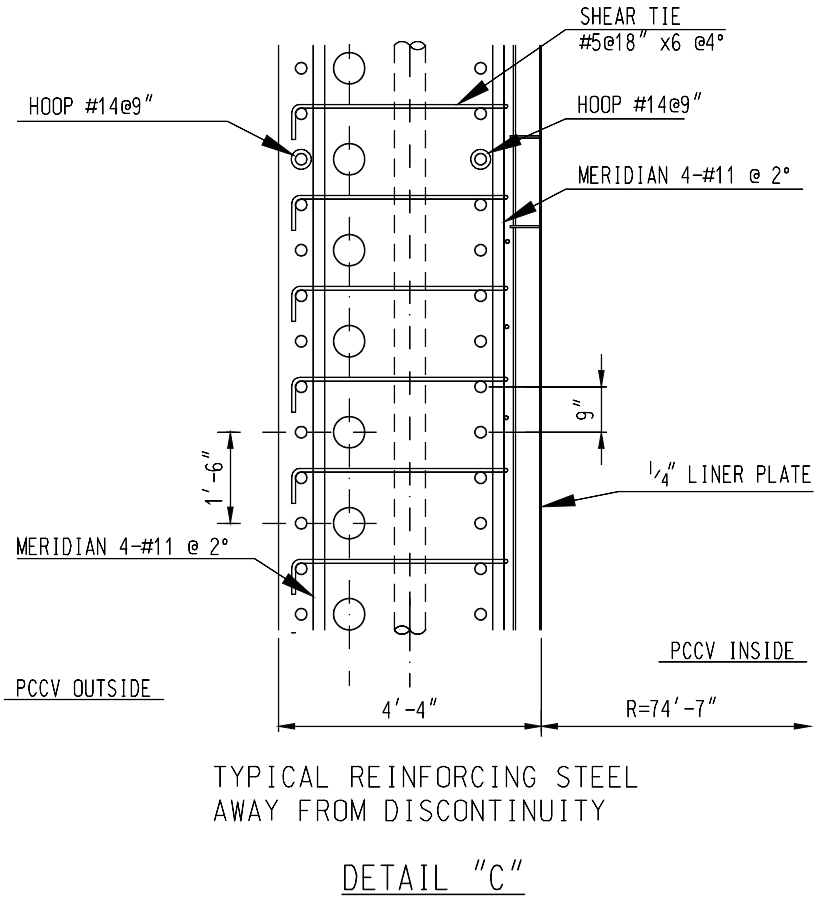

Figure 3.8.1-5 PCCV General Arrangement, Tendons and Reinforcing (Sheet 19 of 19)

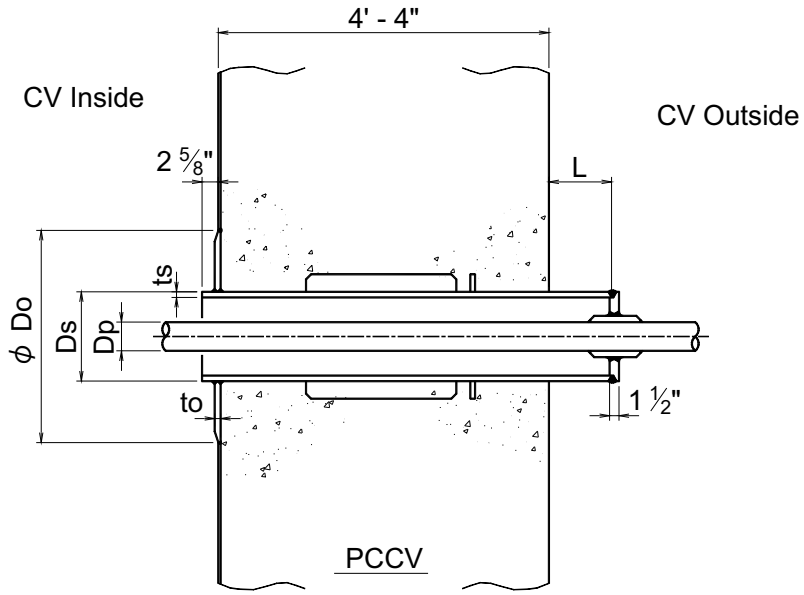

TYPE-1 ~~(Pipe Size=follow 4B)~~ MIC-03-03-00057

Ds	ts	Dp	L	Do	to	SLEEVE NO.
6B	1/2”	3/4B	7”	11 5/8”	1/2”	P220,P222,P231,P270,P416,P417
		1B	7”			P236,P247,P265,P266
		2B	7”			P207,P230,P245,P253,P284
10B	3/8”	3B	7”	1’-5 1/4”	1/2”	P205,P248,P260,P283
14B	~~5~~7/8”	4B	7”	1’-8 3/4”	1/2”	P162,P210,P227,P233,P235,P258
			7”			P274

MIC-03-03-00057

Figure 3.8.1-8 Note: Suffix “B” designates nominal diameter in inches MIC-03-03-00057

Figure 3.8.1-8 Containment Penetrations (Sheet 1 of 17)

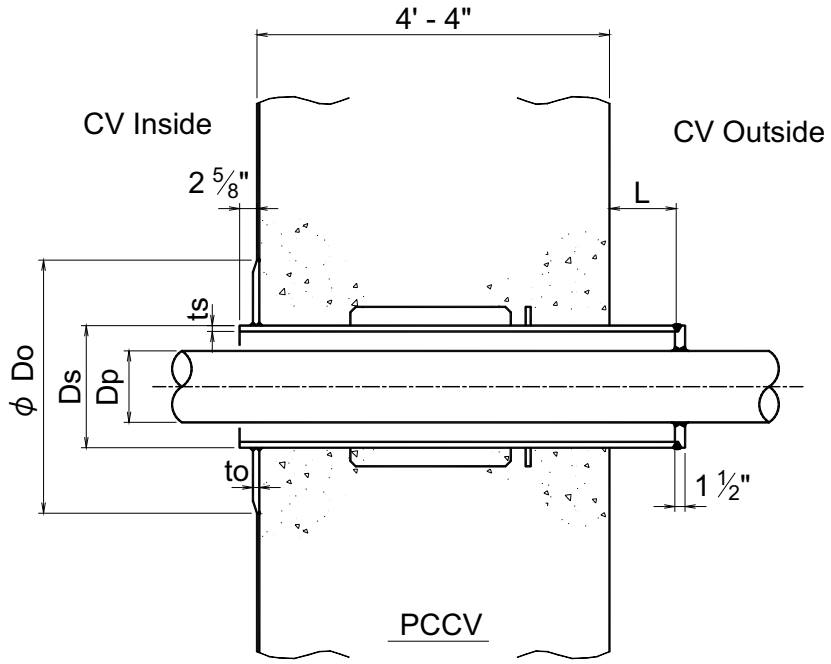

TYPE-2 ~~**(Pipe Size=above 6B)**~~ MIC-03-03-00057

Ds	ts	Dp	L	Do	to	SLEEVE NO.
14B	~~5~~7/8”	6B	7”	1’-8 3/4”	1/2”	P161,P238
		8B	7”			P214,P224,P232,P234,P249,P250
						P251,P252,P261,P271,P401,P410
			23”			P212,P225,P259,P272
18B	1~~/2~~”	10B	7”	2’-1 3/8”	1/2”	P408,P409
			23”			P209,P226,P257,P273

MIC-03-03-00057

MIC-03-03-00057

Figure 3.8.1-8 Containment Penetrations (Sheet 2 of 17)

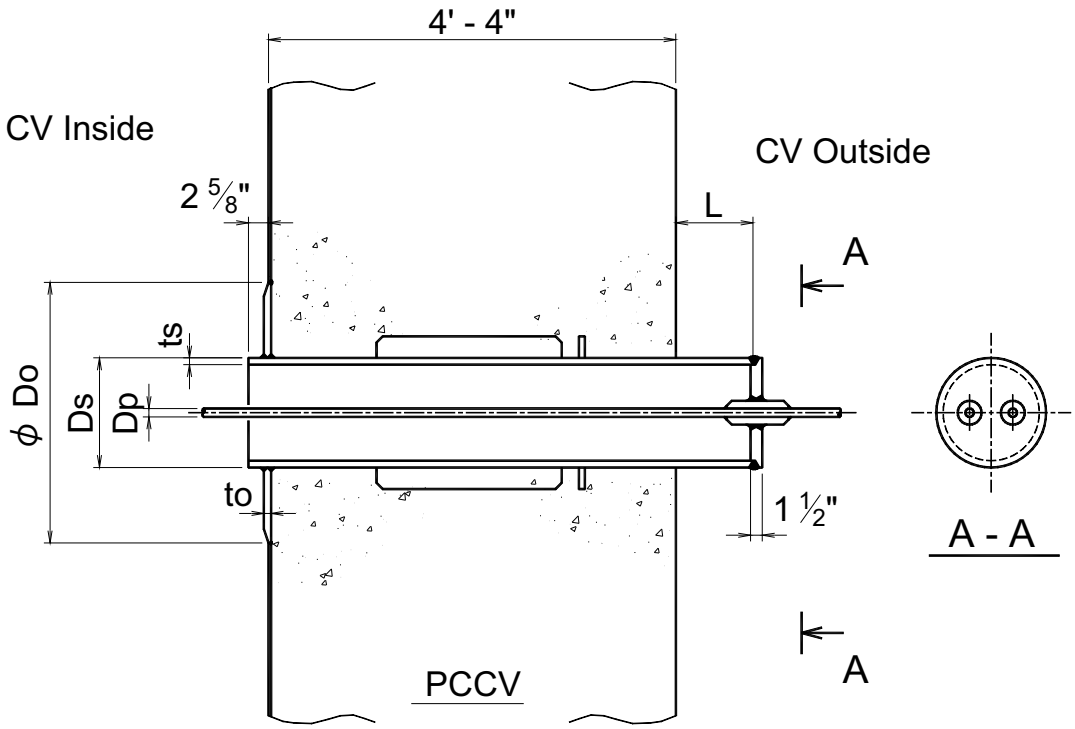

TYPE-4

Ds	ts	Dp	L	Do	to	SLEEVE NO.
14B	~~5~~7/8”	3/4B	7”	1’-8 3/4”	1/2”	P262
			15”			P237,P239,P276
			23”			P267,P269

MIC-03-03-00057

Figure 3.8.1-8 Containment Penetrations (Sheet 4 of 17)

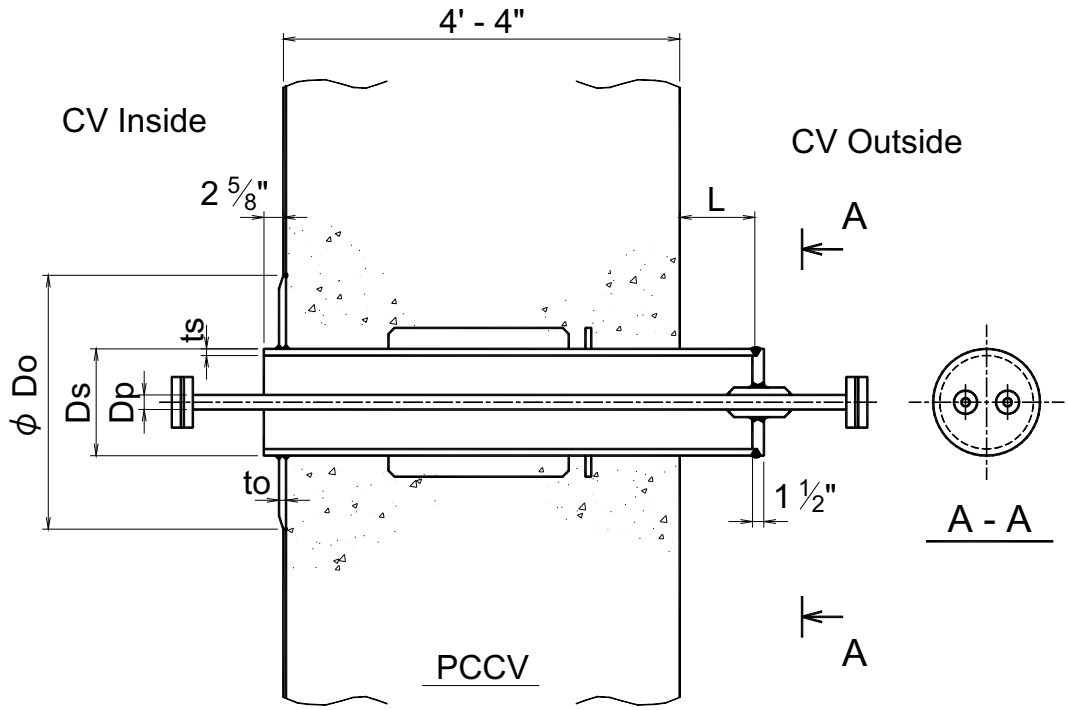

TYPE-5

Ds	ts	Dp	L	Do	to	SLEEVE NO.
14B	~~5~~7/8"	3/4B	7"	1'-8 3/4"	1/2"	P405
		1-1/2B	7"			P418

MIC-03-03-00057

Figure 3.8.1-8 Containment Penetrations (Sheet 5 of 17)

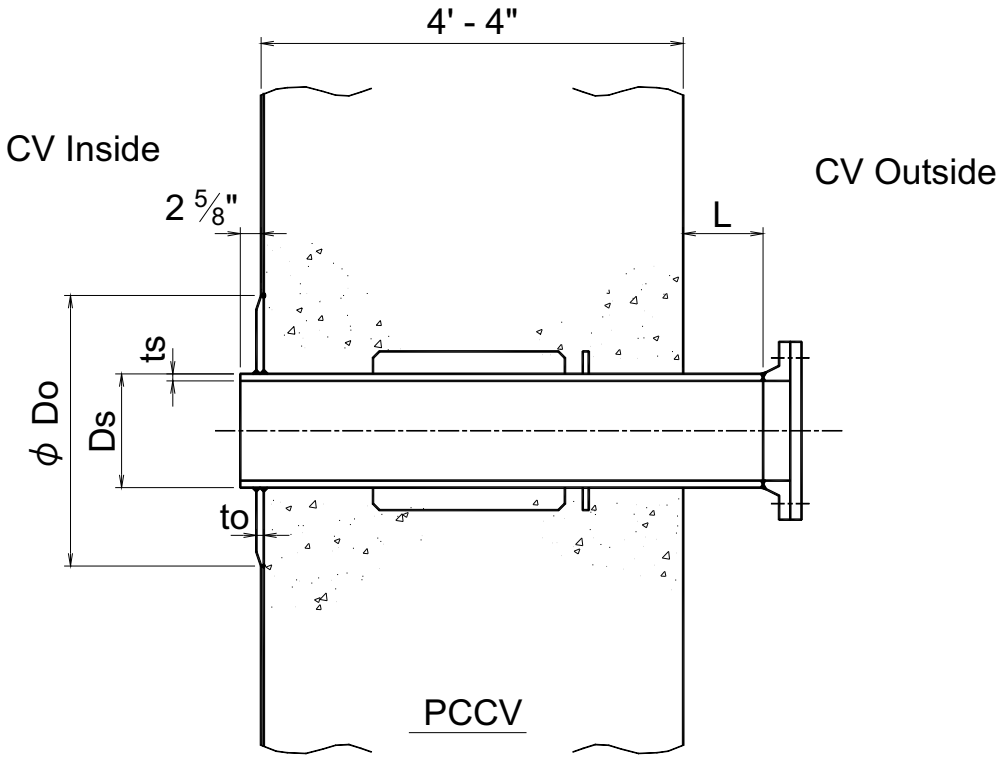

TYPE-9

Ds	ts	L	Do	to	SLEEVE NO.
6B	1/2”	7”	11 5/8”	1/2”	P301
12B	5/8”	7”	1’-7 1/4”	1/2”	P216,P218
14B	~~5~~7/8”	7”	1’-8 3/4”	1/2”	P419,P420

MIC-03-03-00057

Figure 3.8.1-8 Containment Penetrations (Sheet 7 of 17)

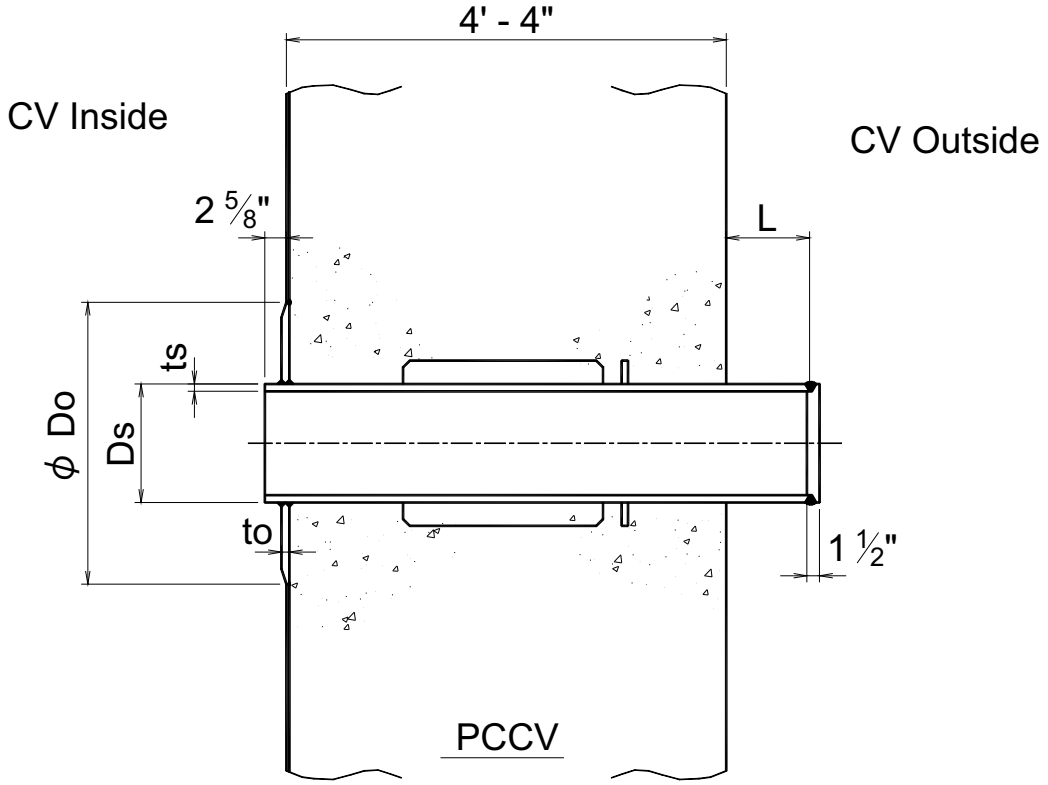

TYPE-10

Ds	ts	L	Do	to	SLEEVE NO.
14B	~~5~~7/8”	24”	1’-8 3/4”	1/2”	P208,P213,P215,P246,P254,P268
					P275,P285,P406,P407

MIC-03-03-00057

Figure 3.8.1-8 Containment Penetrations (Sheet 8 of 17)

MIC-03-03-00057

(SRI)

Figure 3.8.1-8 Containment Penetrations (Sheet 11 of 17)

MIC-03-03-00057

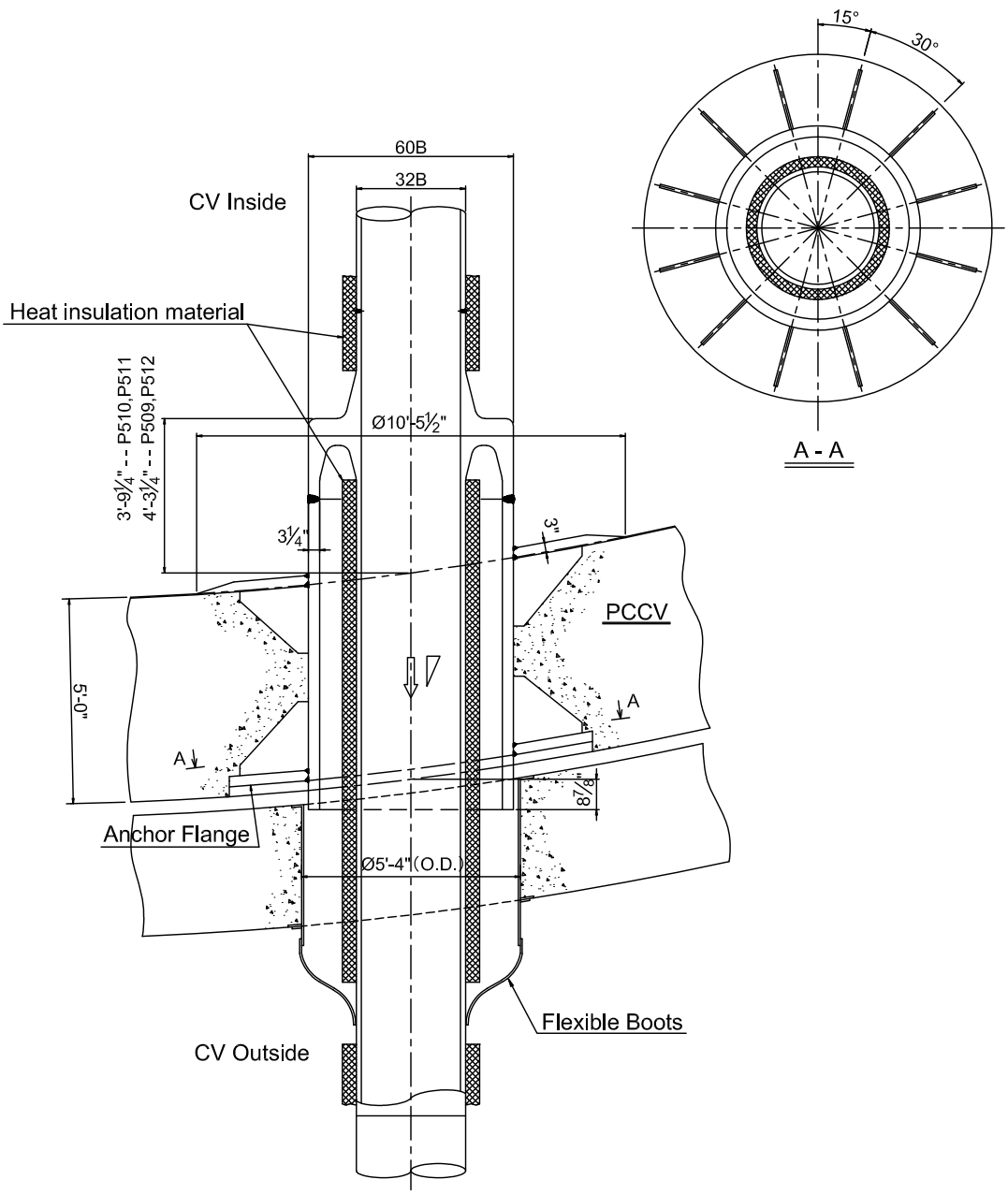

P509～P512

(Main Steam)

Figure 3.8.1-8 Containment Penetrations (Sheet 13 of 17)

MIC-03-03-00057

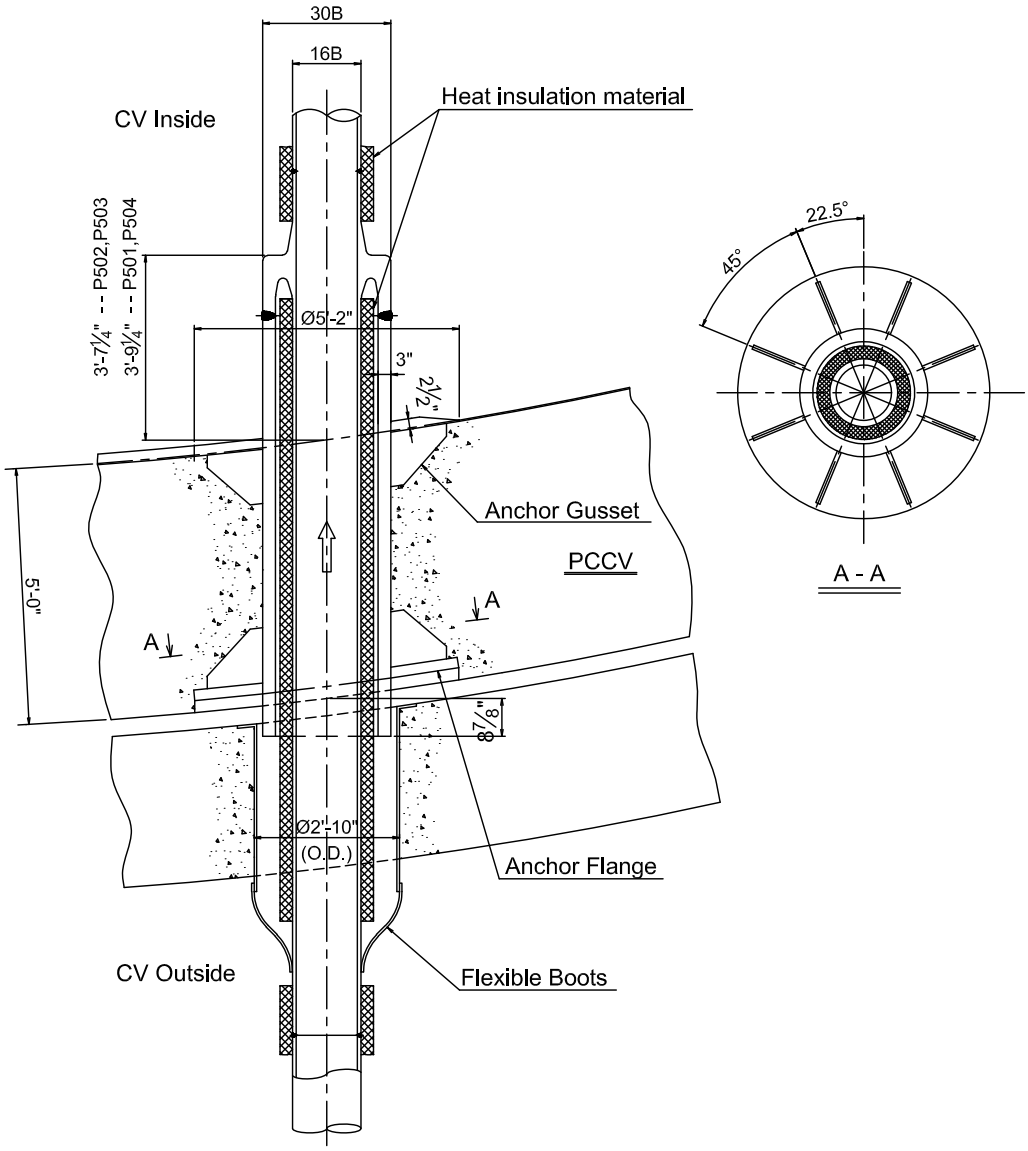

P501～P504

(Feed Water)

Figure 3.8.1-8 Containment Penetrations (Sheet 14 of 17)

MIC-03-03-00057

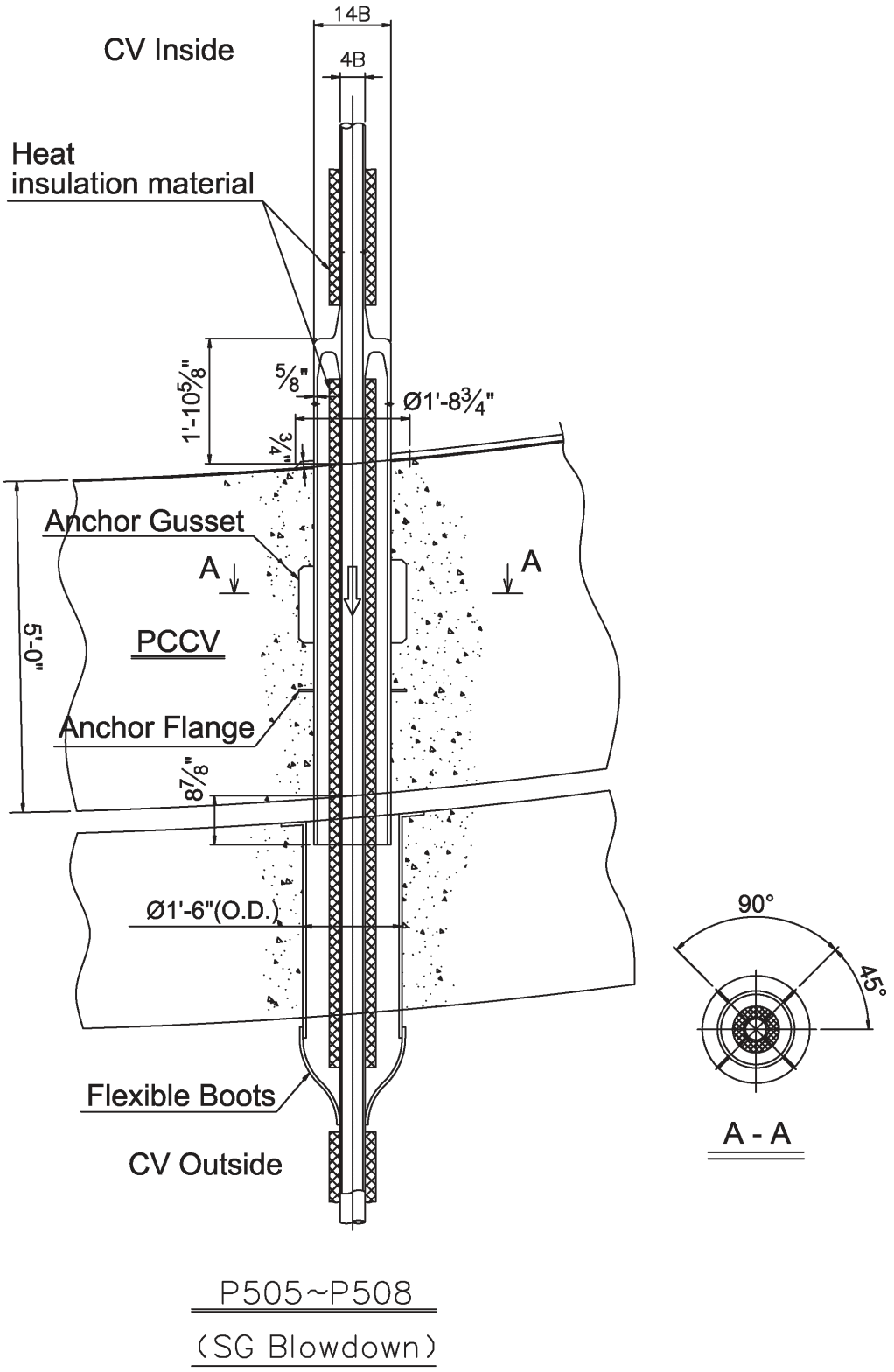

Figure 3.8.1-8 Containment Penetrations (Sheet 15 of 17)

MIC-03-03-00057

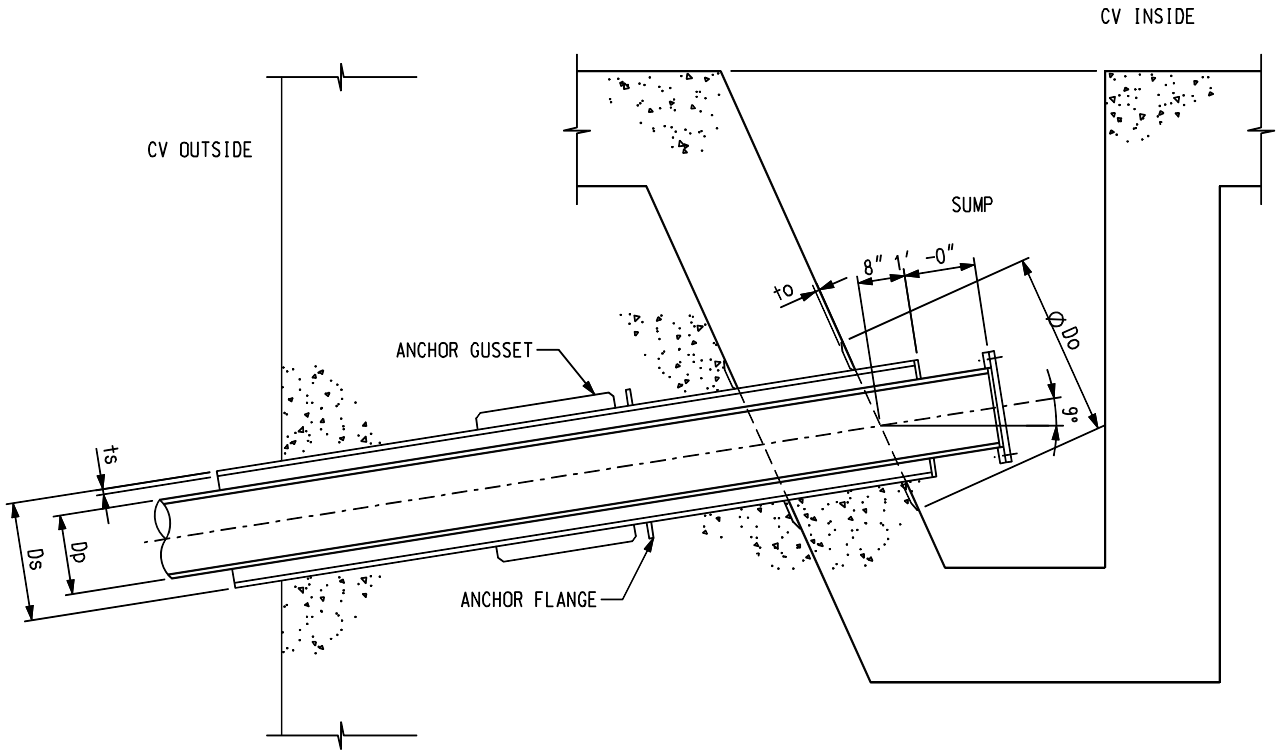

P151~P158

Ds	ts	Dp	Do	to	SLEEVE NO.
18B	1~~/2~~"	10B	2'-1 3/8"	1/2"	P152,P153,P156,P157
22B	1/2"	14B	2'-5 3/8"	1/2"	P151,P154,P155,P158

MIC-03-03-00057

Figure 3.8.1-8 Containment Penetrations (Sheet 16 of 17)

MIC-03-03-00057

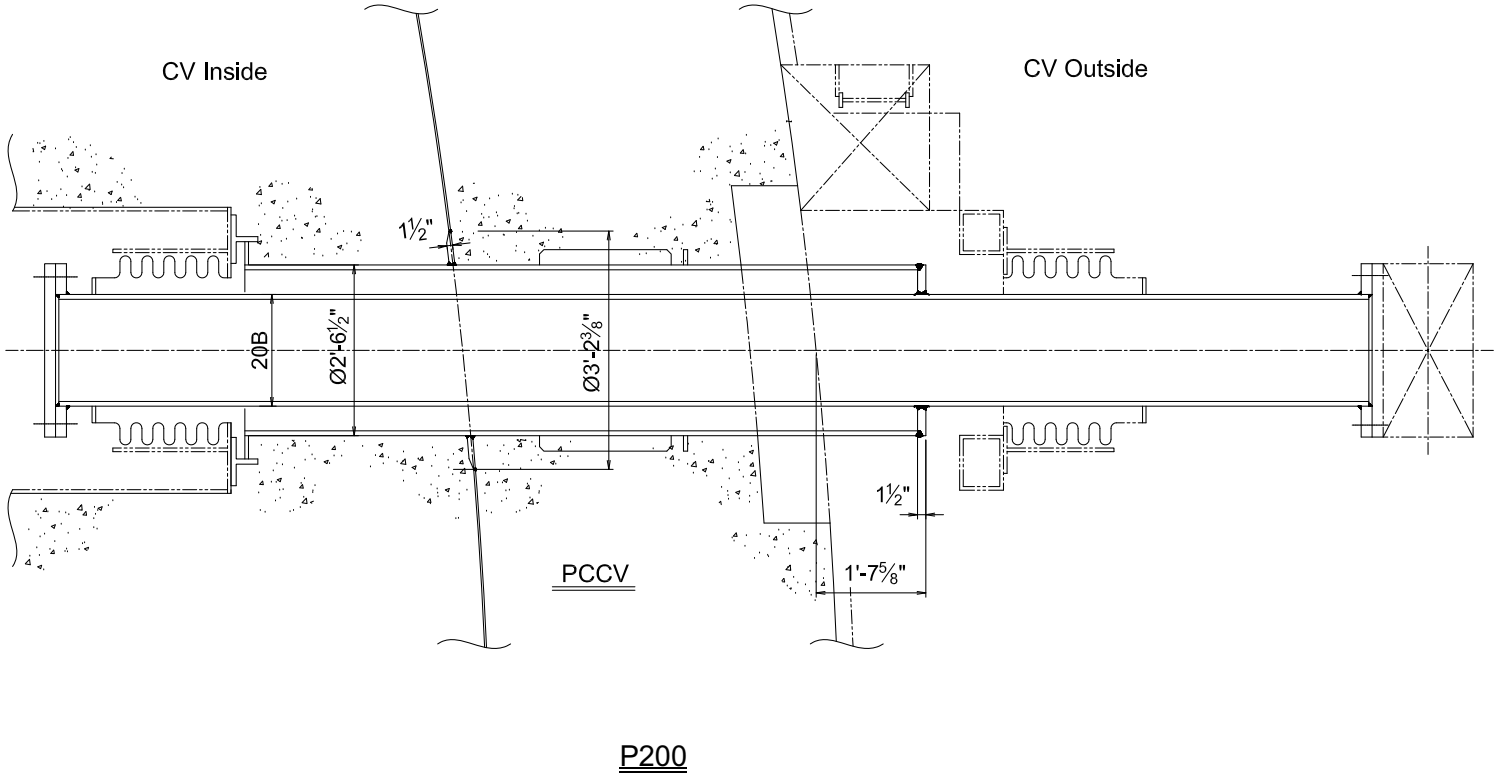

Figure 3.8.1-8 Containment Penetrations (Sheet 17 of 17)

MIC-03-03-00057

Security-Related Information – Withheld Under 10 CFR 2.390

Figure 3.8.3-6 Interior Compartments Wall Layout and Configuration (Sheet 6 of 7)

MIC-03-03-00057

Security-Related Information – Withheld Under 10 CFR 2.390

Figure 3.8.3-6 Interior Compartments Wall Layout and Configuration (Sheet 7 of 7)

MIC-03-03-00057

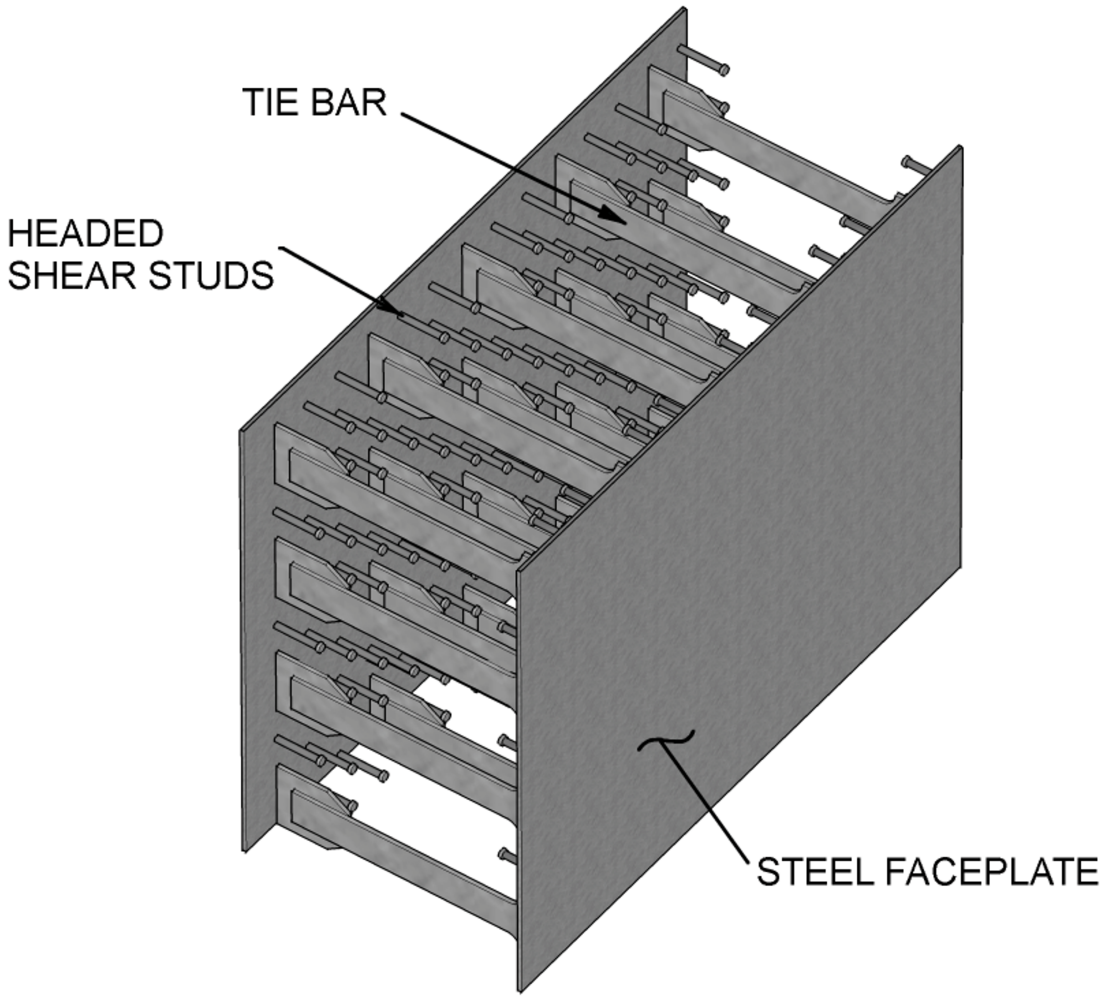

Figure 3.8.3-7 Typical Details of SC Modules (Sheet 1 of 5)

MIC-03-03-00057

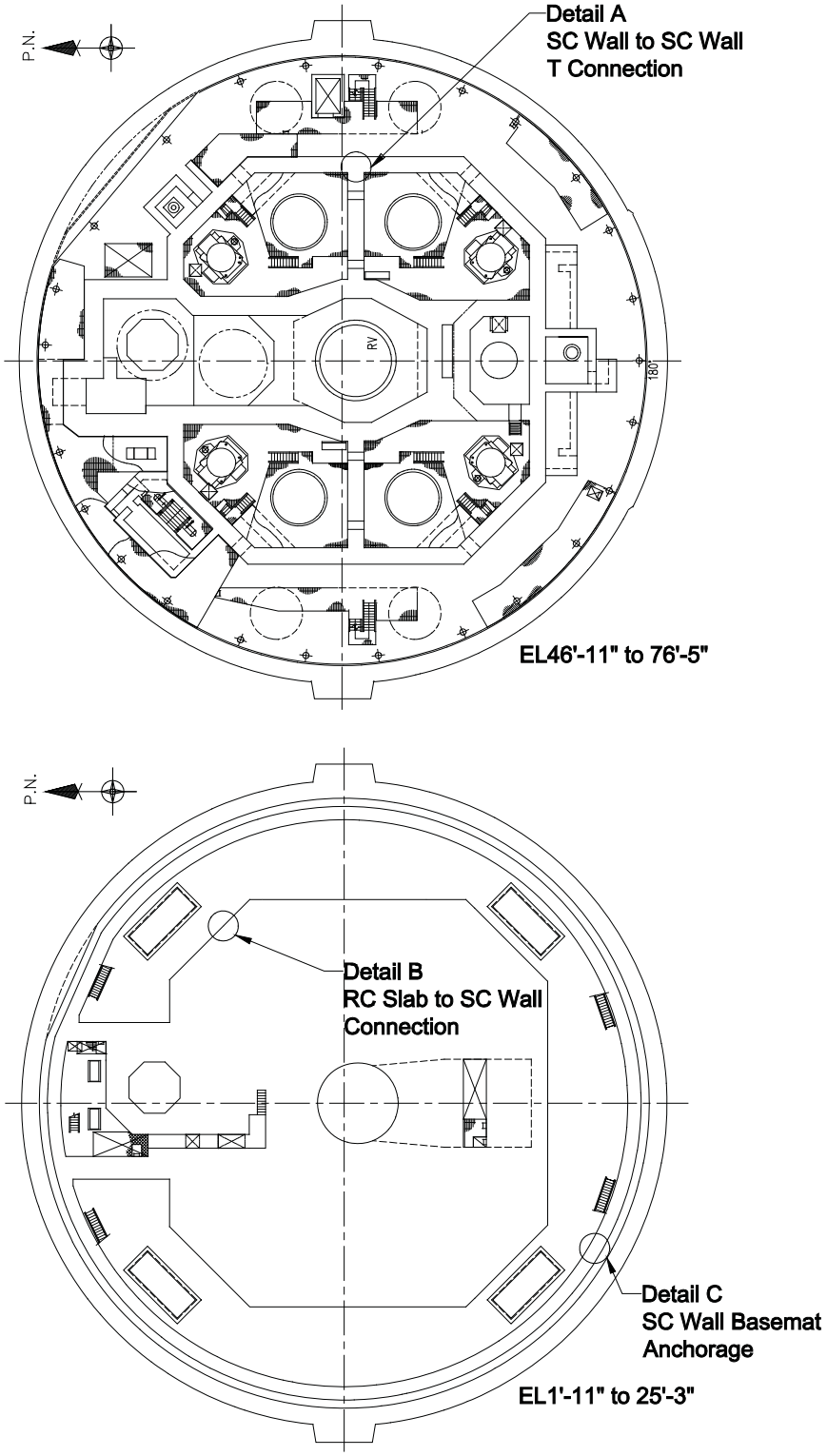

DCD_3.8.3-4

Figure 3.8.3-7 Typical Details of SC Modules (Sheet 2 of 5)

MIC-03-03-00057

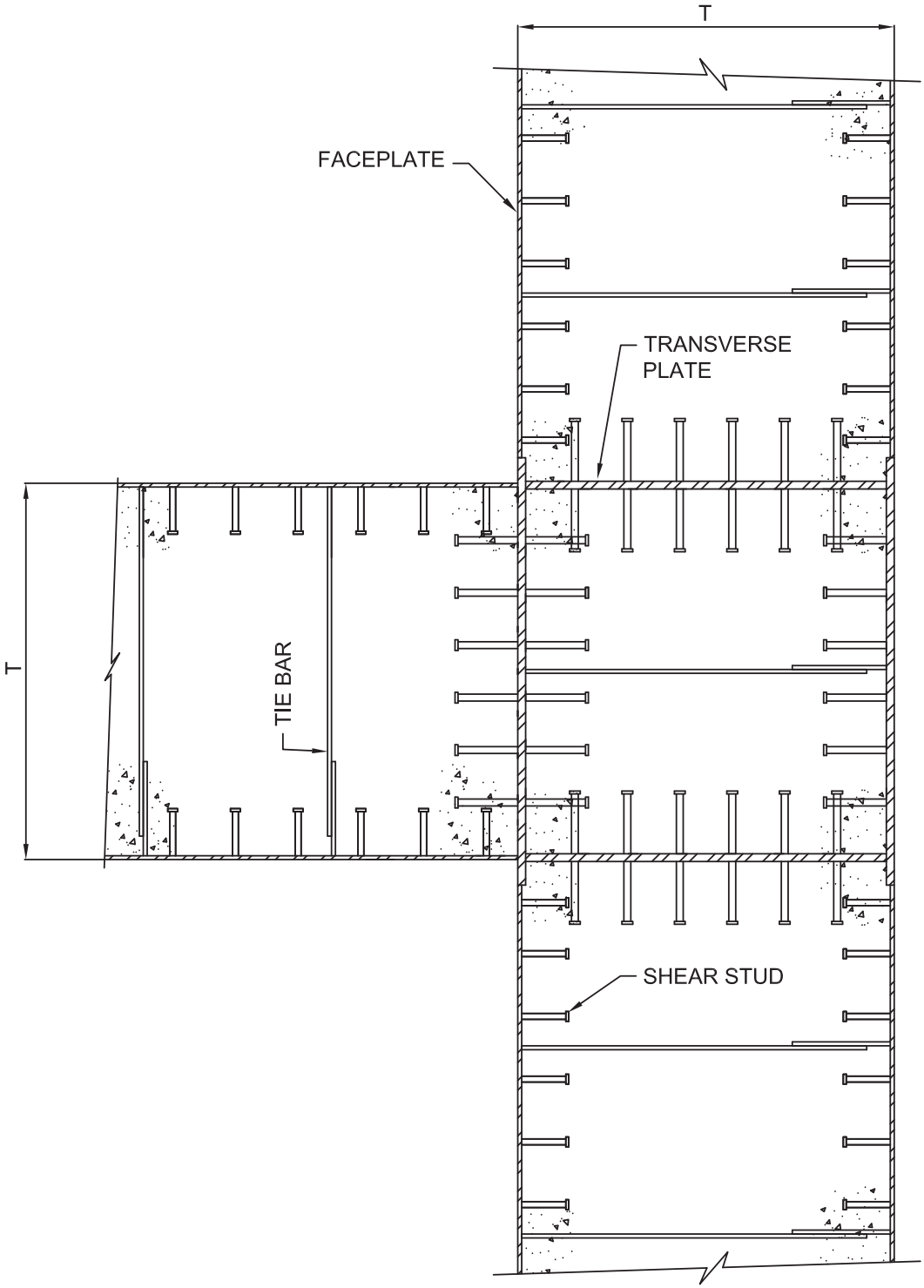

Figure 3.8.3-7 Typical Details of SC Modules (Sheet 3 of 5)

MIC-03-03-00057

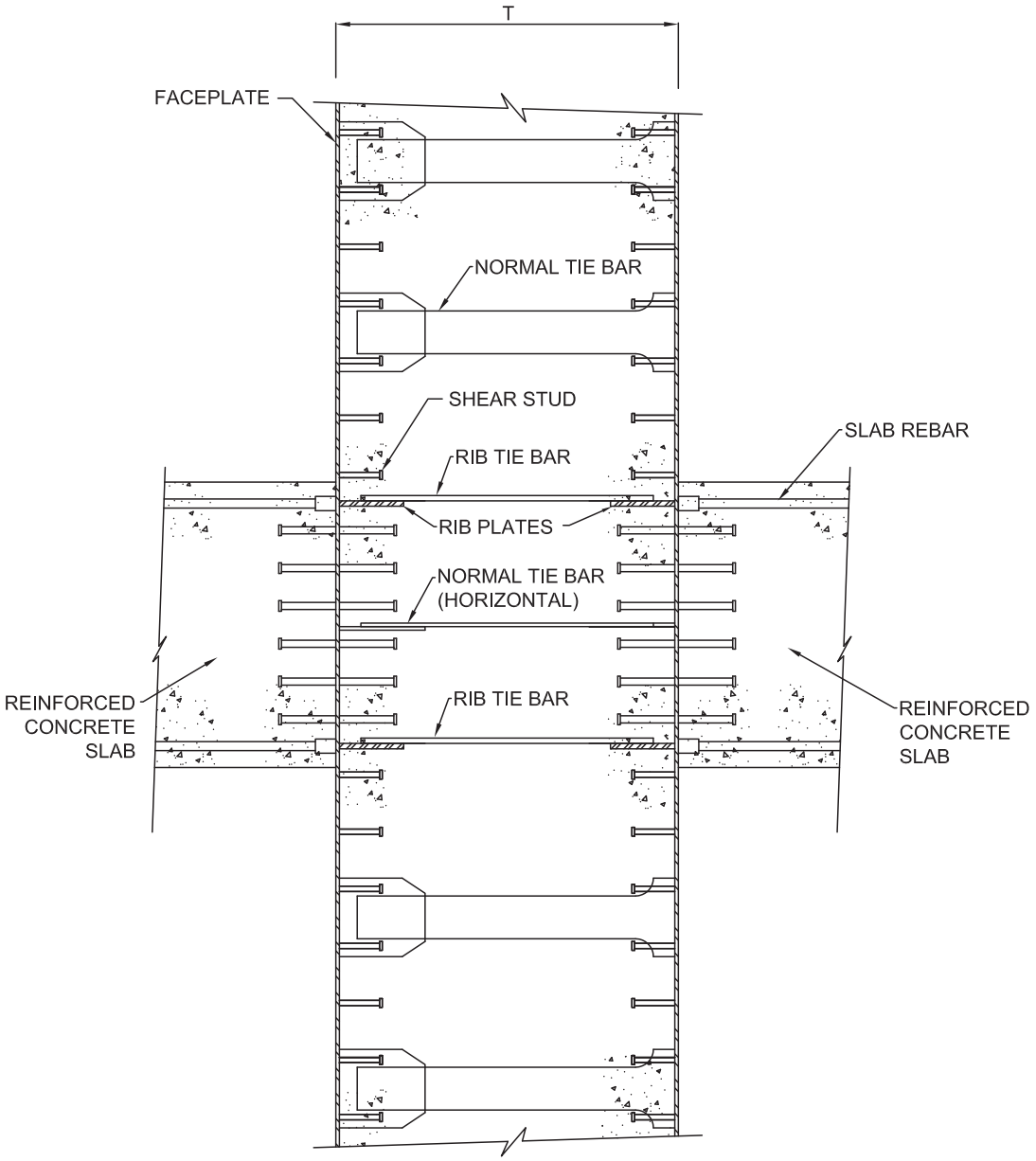

Figure 3.8.3-7 Typical Details of SC Modules (Sheet 4 of 5)

MIC-03-03-00057

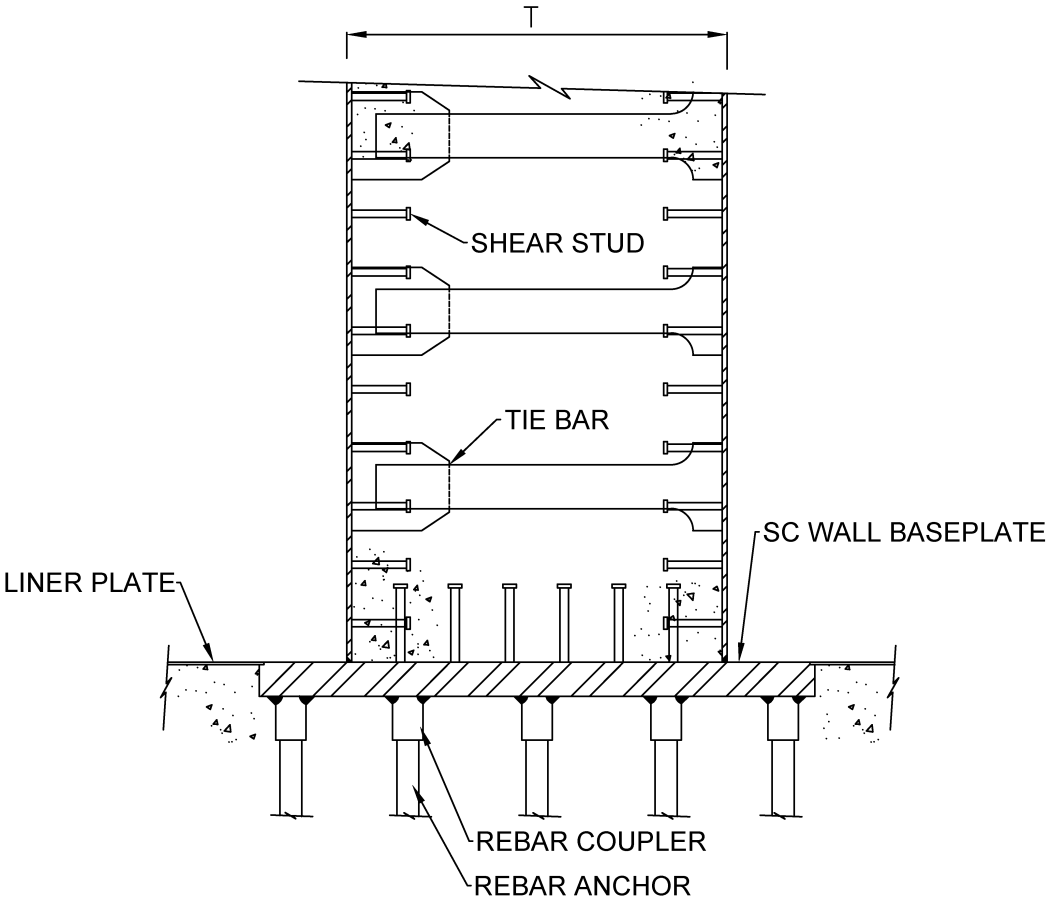

Figure 3.8.3-7 Typical Details of SC Modules (Sheet 5 of 5)

MIC-03-03-00057

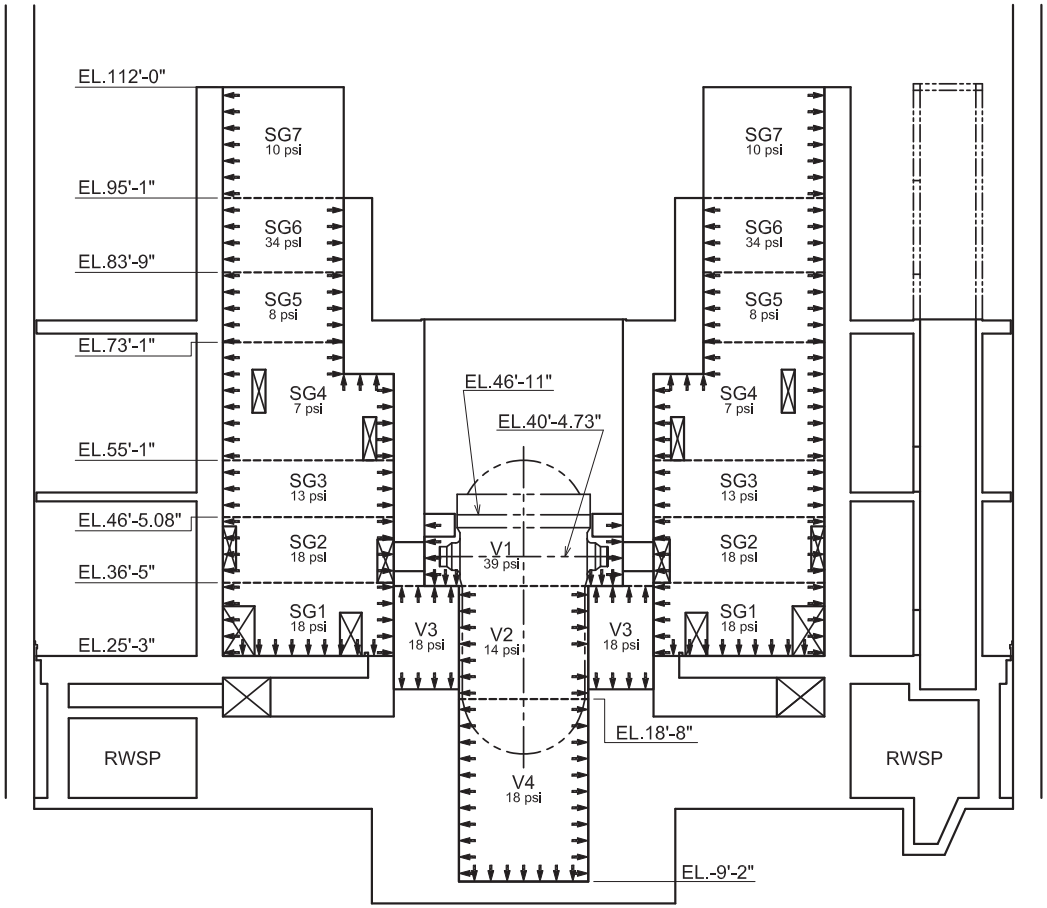

East-West Section

Figure 3.8.3-9 ~~Containment Internal Structure~~CIS Pressure Loads (Sheet 1 of 3)

MIC-03-03-00043
MIC-03-03-00057

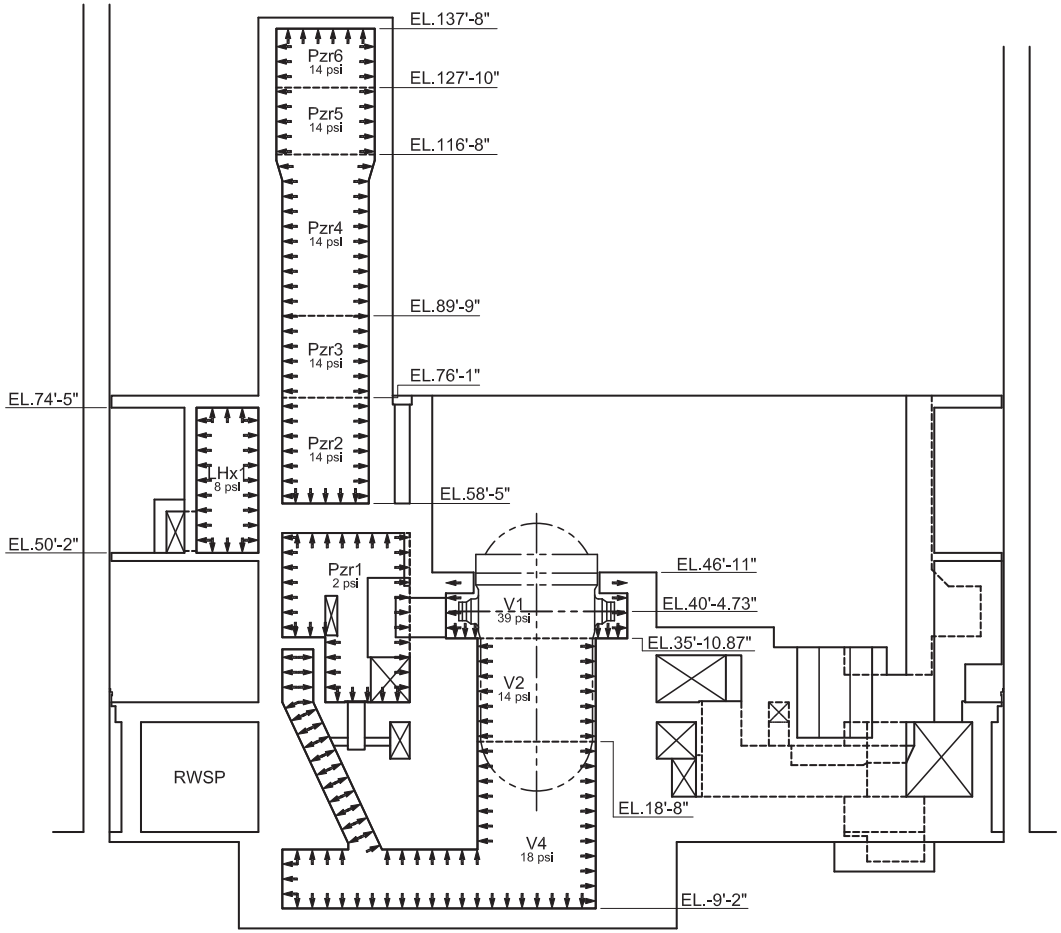

North-South Section

Figure 3.8.3-9 ~~Containment Internal Structure~~CIS Pressure Loads (Sheet 2 of 3)

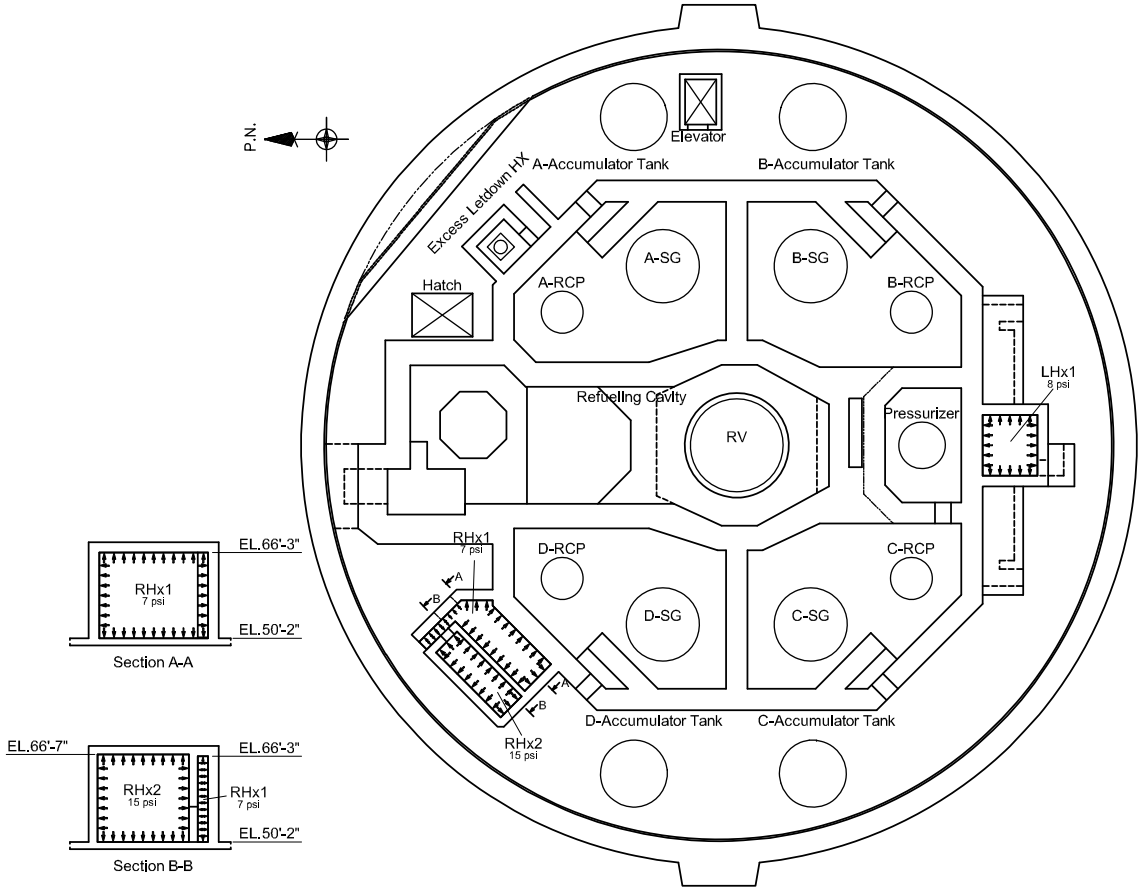

Plan EL.50'-2"

Figure 3.8.3-9 ~~Containment Internal Structure~~CIS Pressure Loads (Sheet 3 of 3)

MIC-03-03-00057

MIC-03-03-00066
MIC-03-03-00057

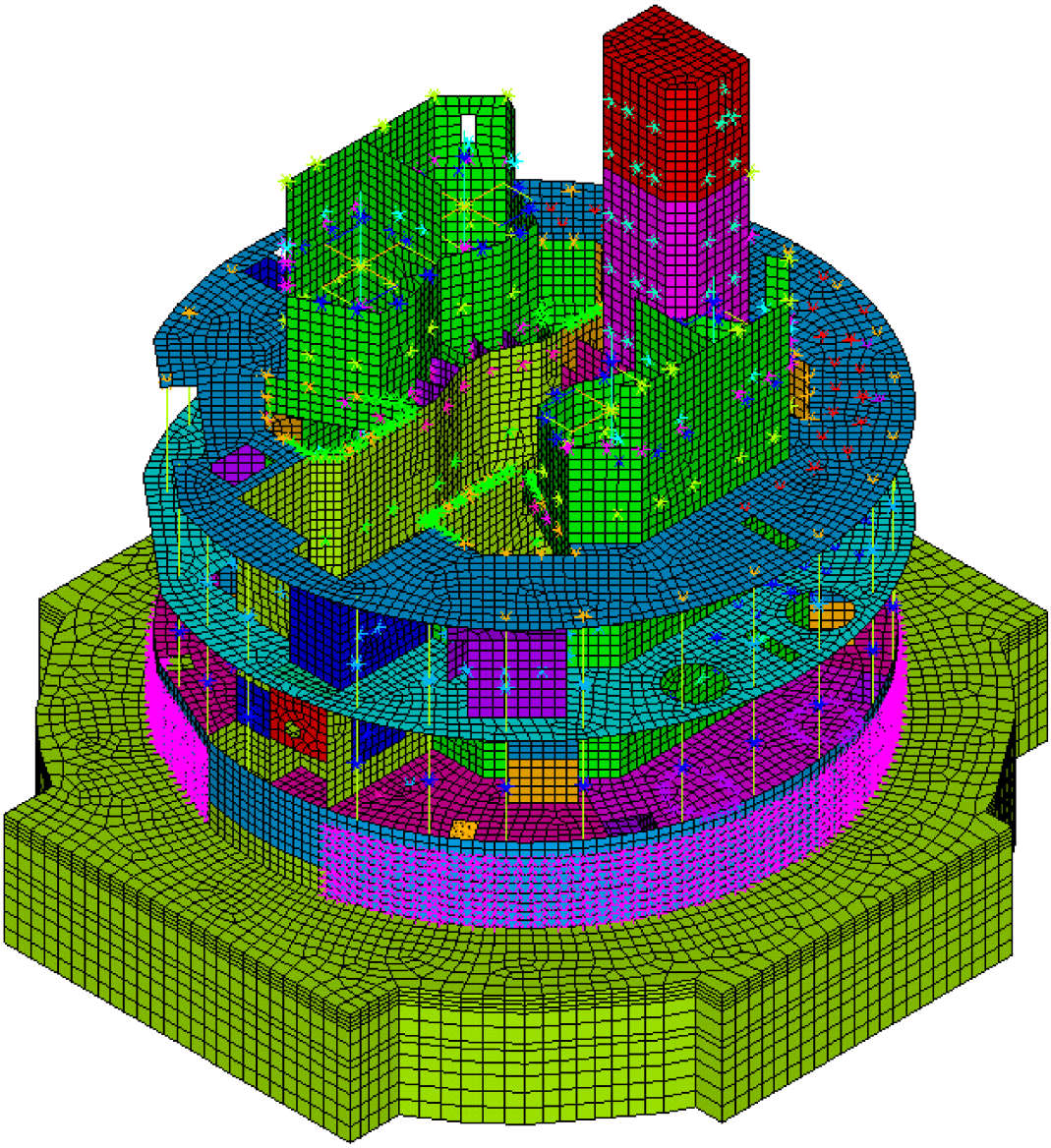

Figure 3.8.3-10 ~~Containment Internal Structure~~CIS FE Model

Security-Related Information – Withheld Under 10 CFR 2.390

Figure 3.8.3-11 ~~Critical Locations~~Representative of SC Modules MIC-03-03-00057

MIC-03-03-00057

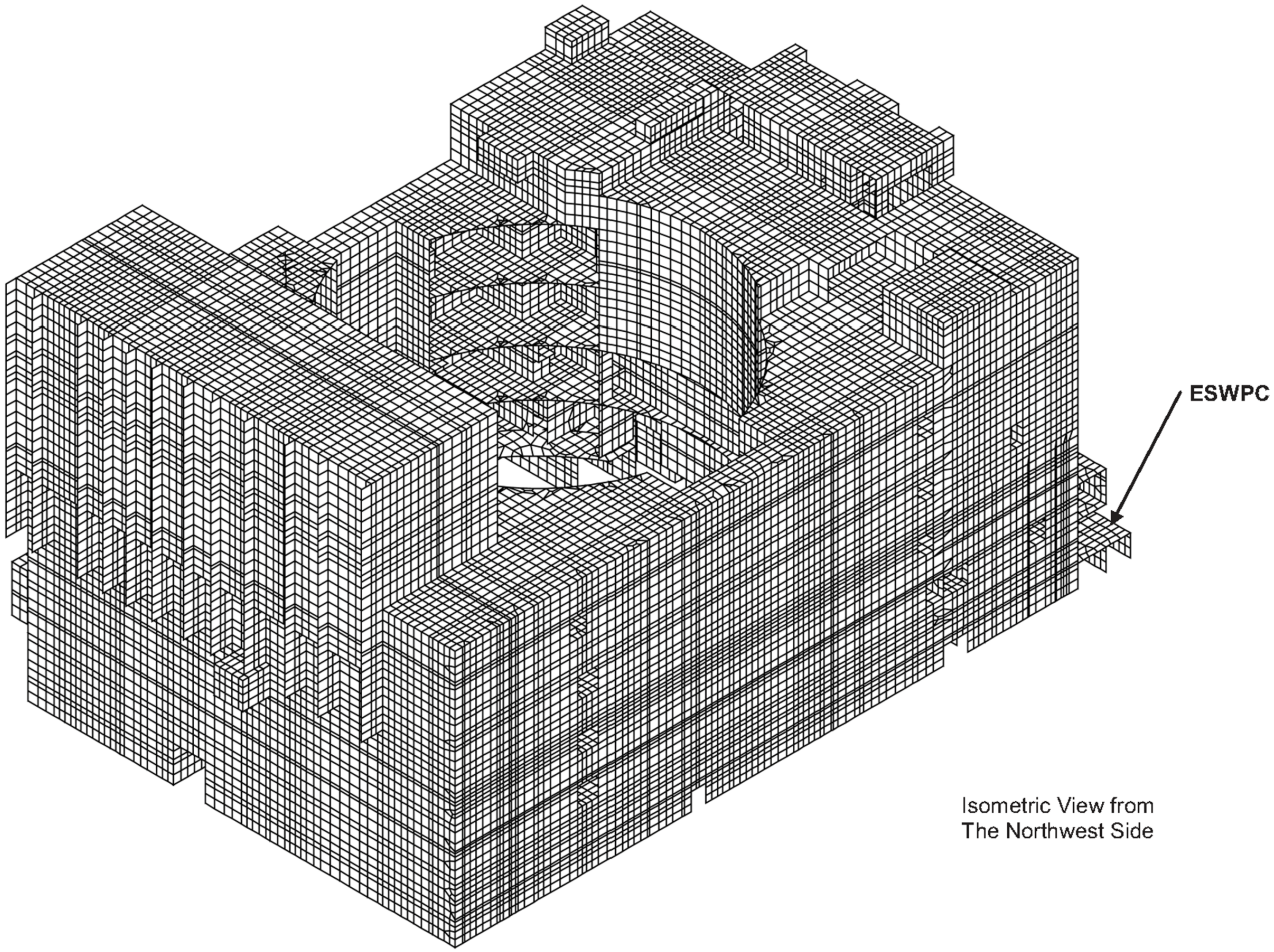

Figure 3.8.4-2 FE Model of R/B (Sheet 1 of 2)

MIC-03-03-00057

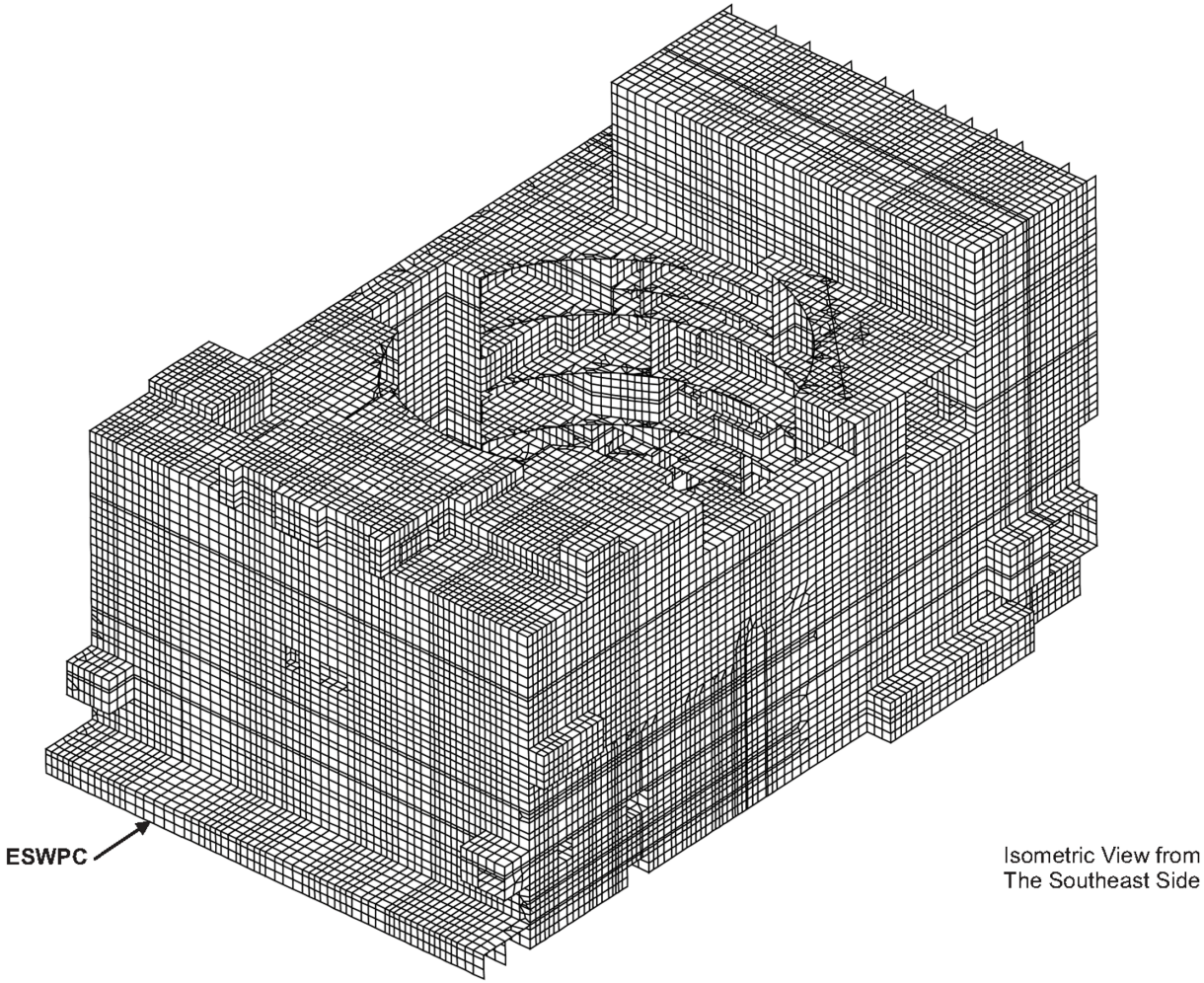

Figure 3.8.4-2 FE Model of R/B (Sheet 2 of 2)

MIC-03-03-00057

Security-Related Information – Withheld Under 10 CFR 2.390

Figure 3.8.4-3 R/B ~~Critical Sections~~Plan View (Sheet 1 of 2)

MIC-03-03-00057

Security-Related Information – Withheld Under 10 CFR 2.390

Figure 3.8.4-3 R/B ~~Critical Sections~~Plan View (Sheet 2 of 2)

MIC-03-03-00057

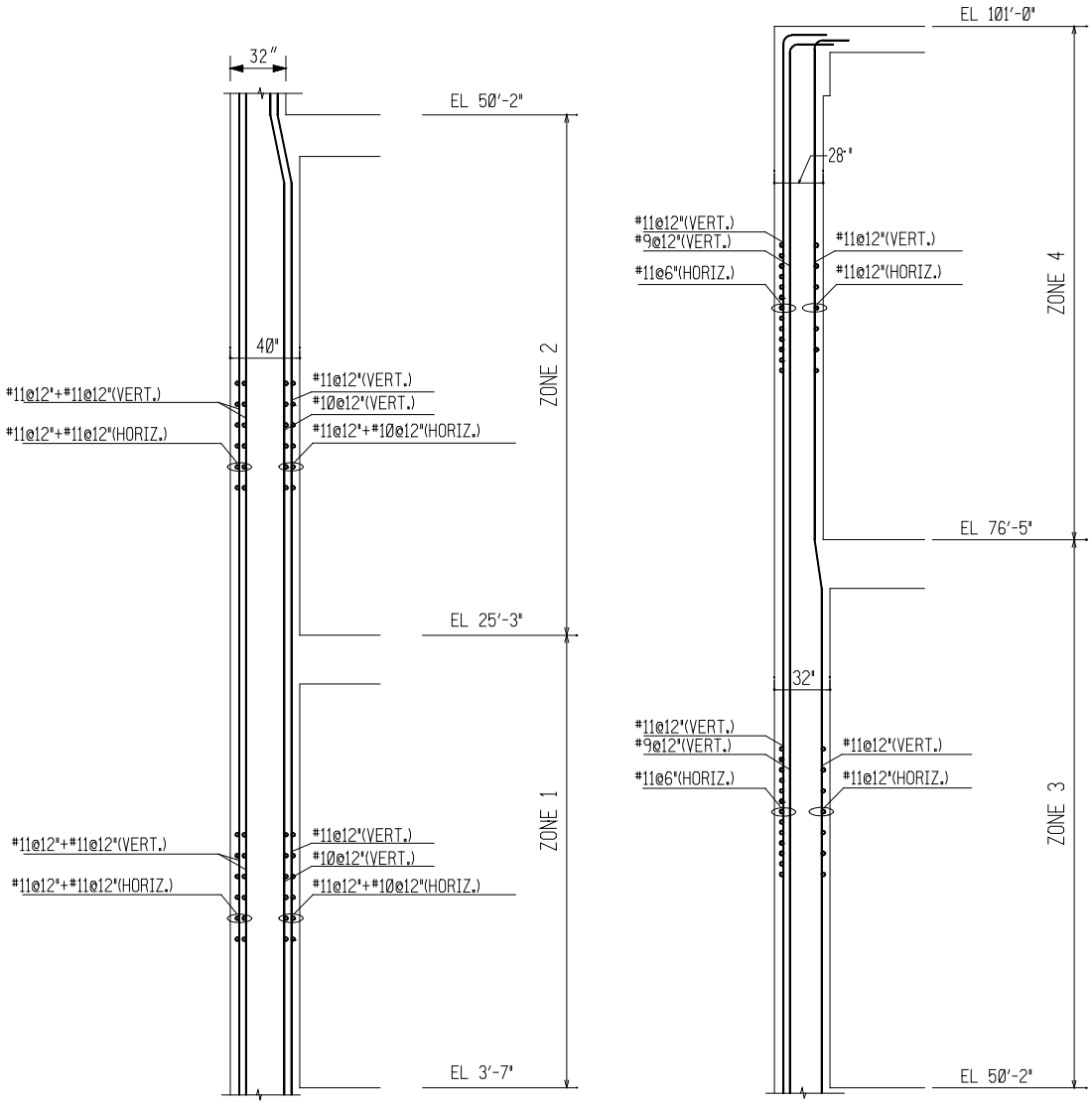

Lower Section **Upper Section**

Vertical Cross Section

Figure 3.8.4-4 Typical Reinforcement in West Exterior Wall – SECTION 1 (Sheet 1 of 2)

MIC-03-03-00057

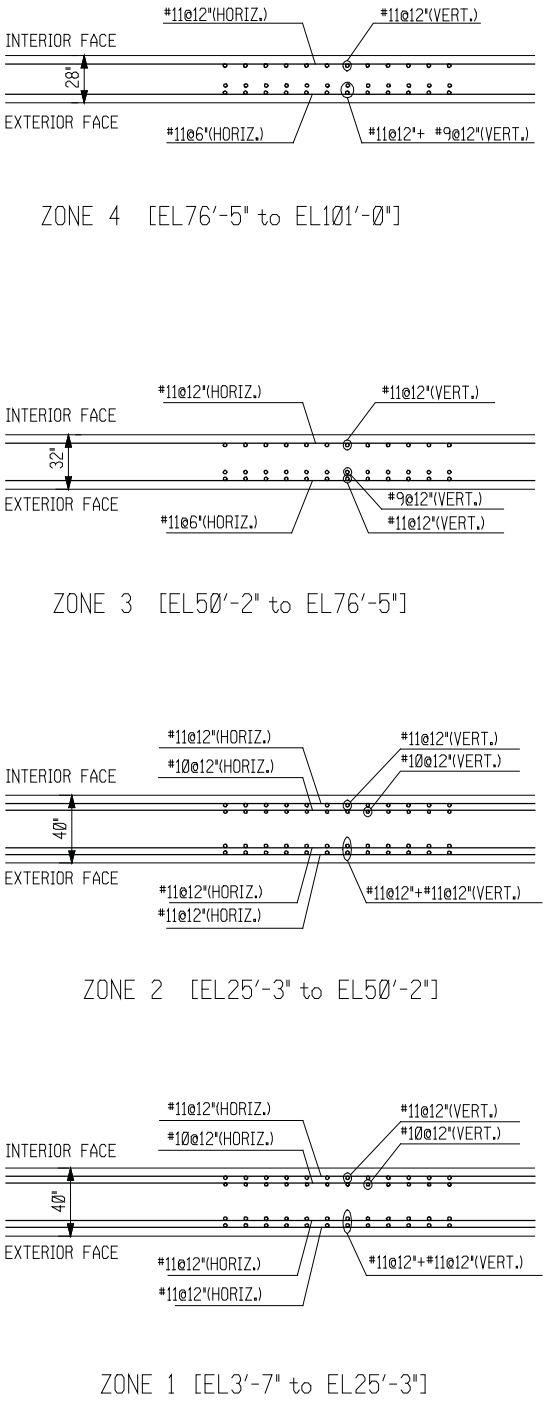

Figure 3.8.4-4 Typical Reinforcement in West Exterior Wall – SECTION 1 (Sheet 2 of 2)

MIC-03-03-00057

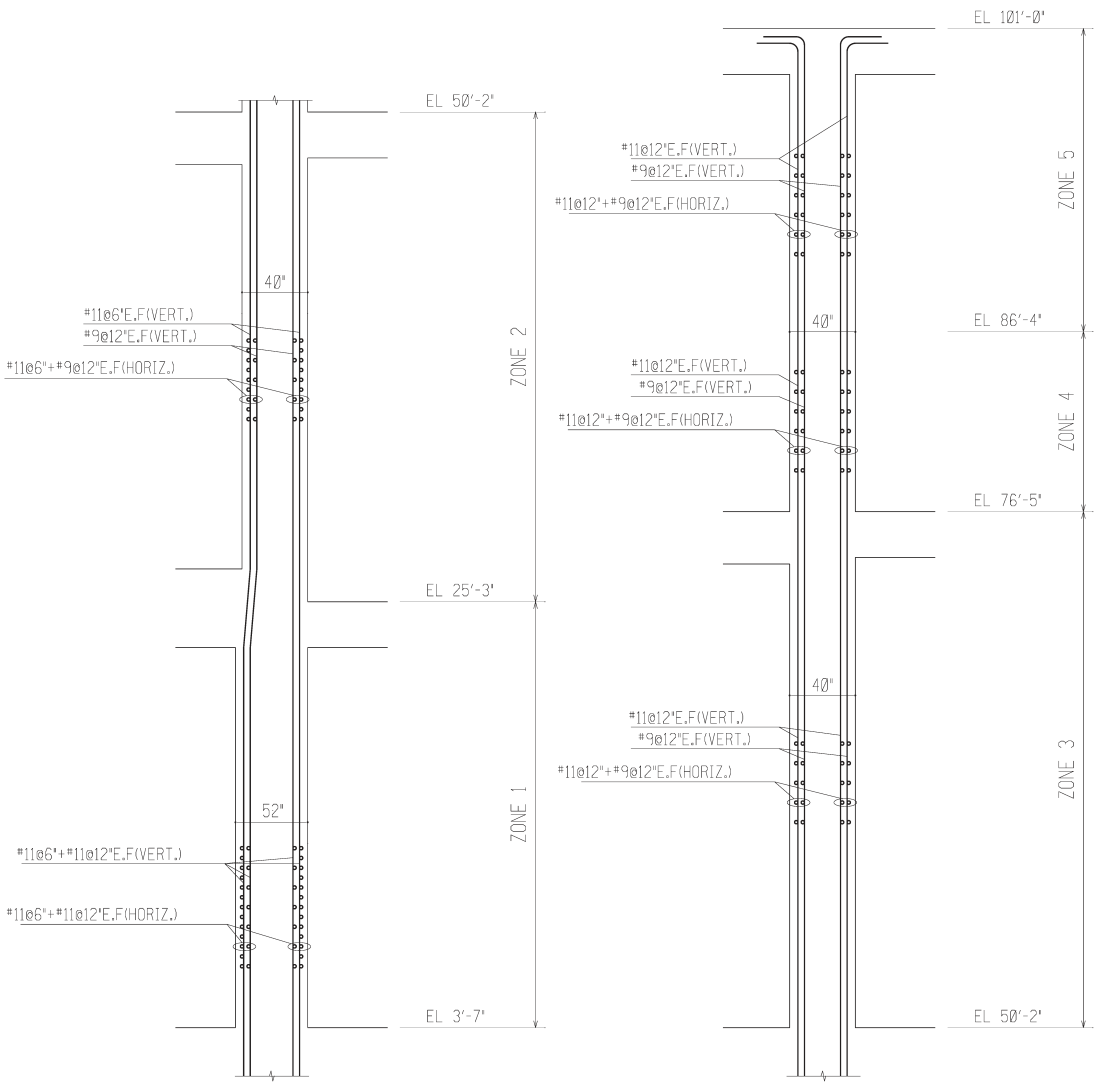

Figure 3.8.4-5 Typical Reinforcement in South Interior Wall – SECTION 2 (Sheet 1 of 2)

MIC-03-03-00057

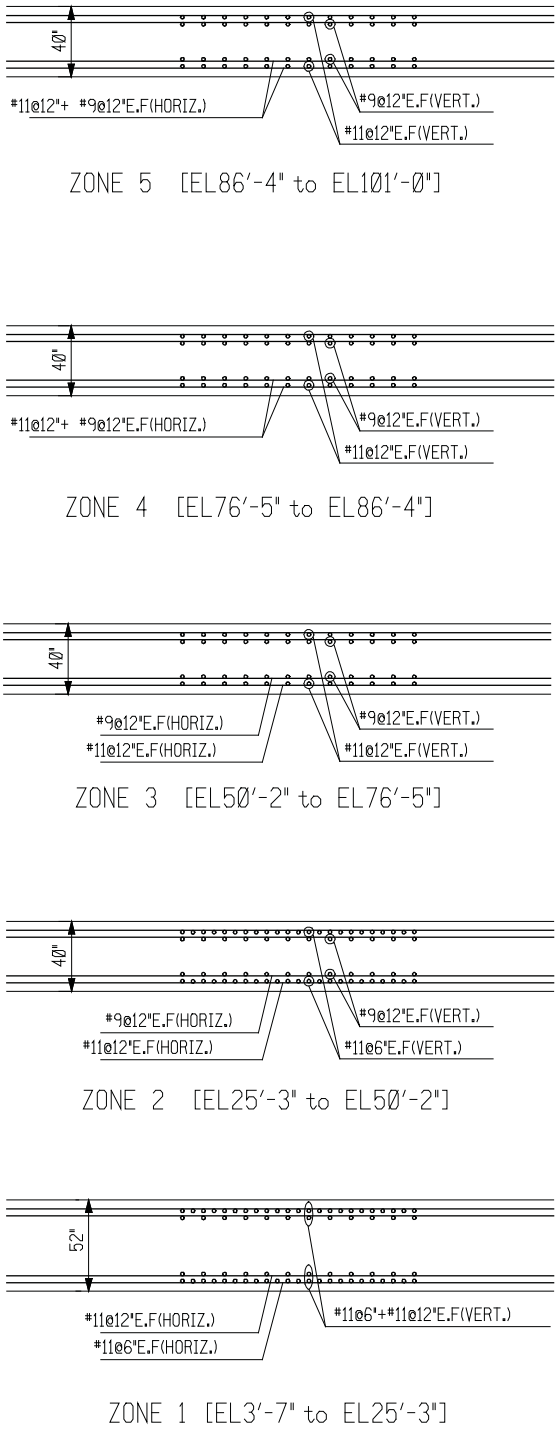

Horizontal Cross Section

Figure 3.8.4-5 Typical Reinforcement in South Interior Wall – SECTION 2 (Sheet 2 of 2)

MIC-03-03-00057

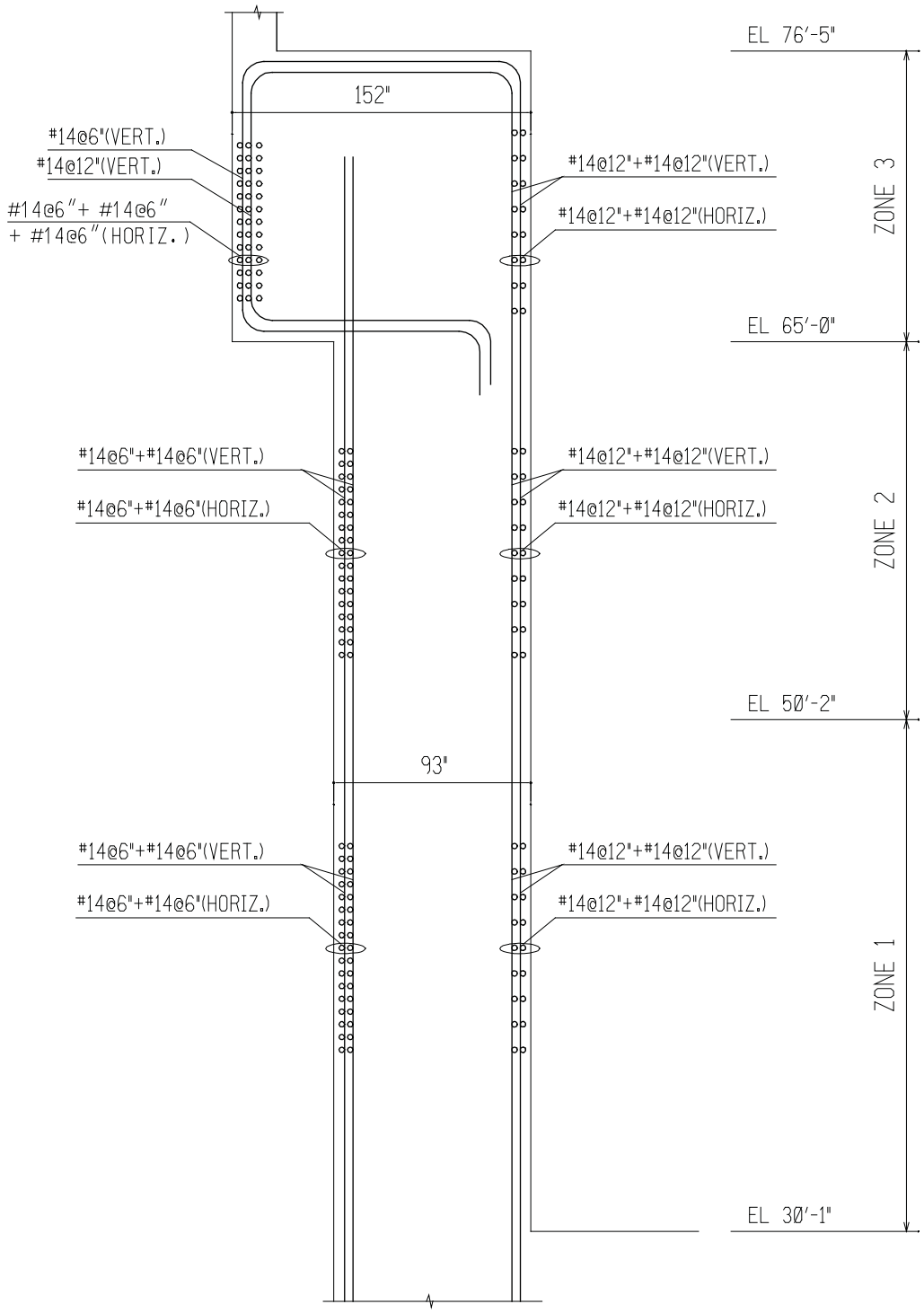

Vertical Cross Section

Figure 3.8.4-6 Typical Reinforcement in North Exterior Wall of Spent Fuel Pit – SECTION 3 (Sheet 1 of 2)

MIC-03-03-00057

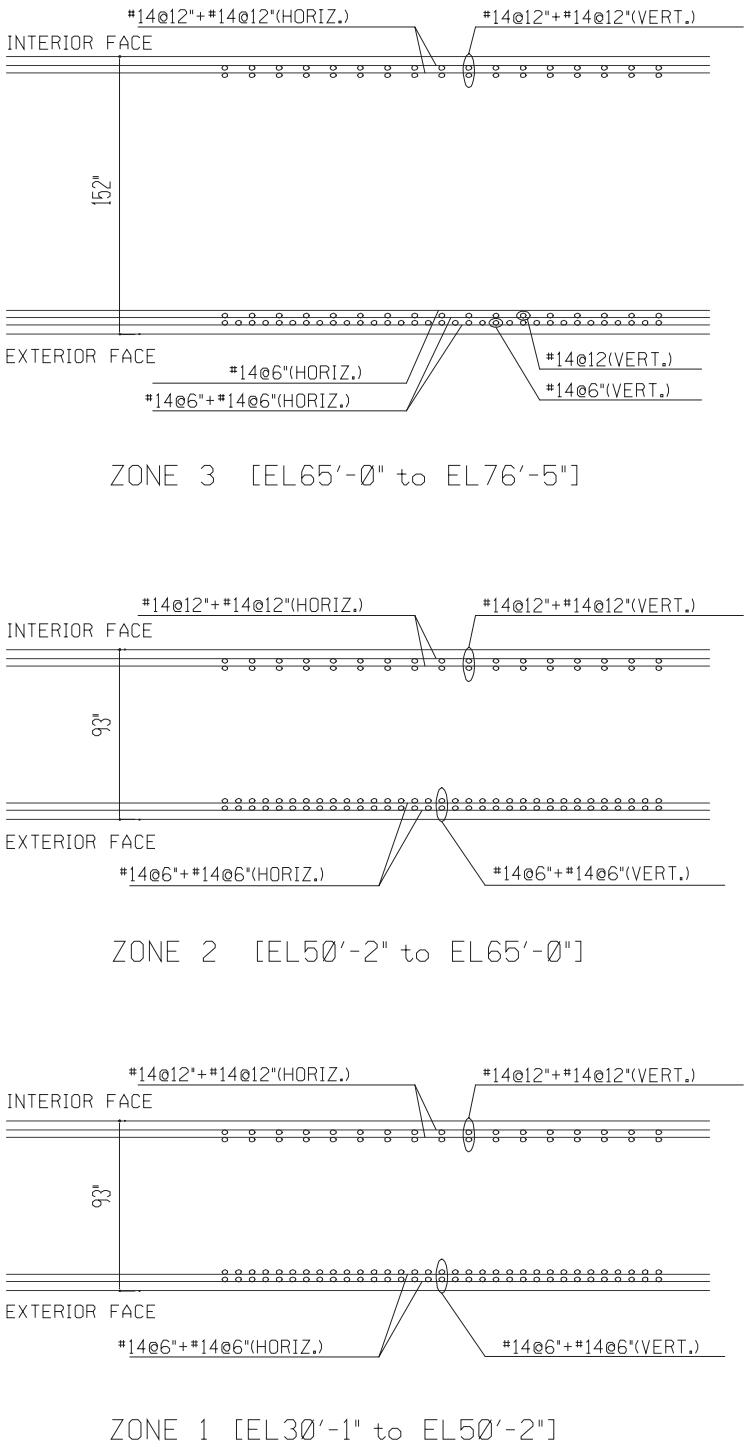

Horizontal Cross Section

Figure 3.8.4-6 Typical Reinforcement in North Exterior Wall of Spent Fuel Pit – SECTION 3 (Sheet 2 of 2)

MIC-03-03-00057

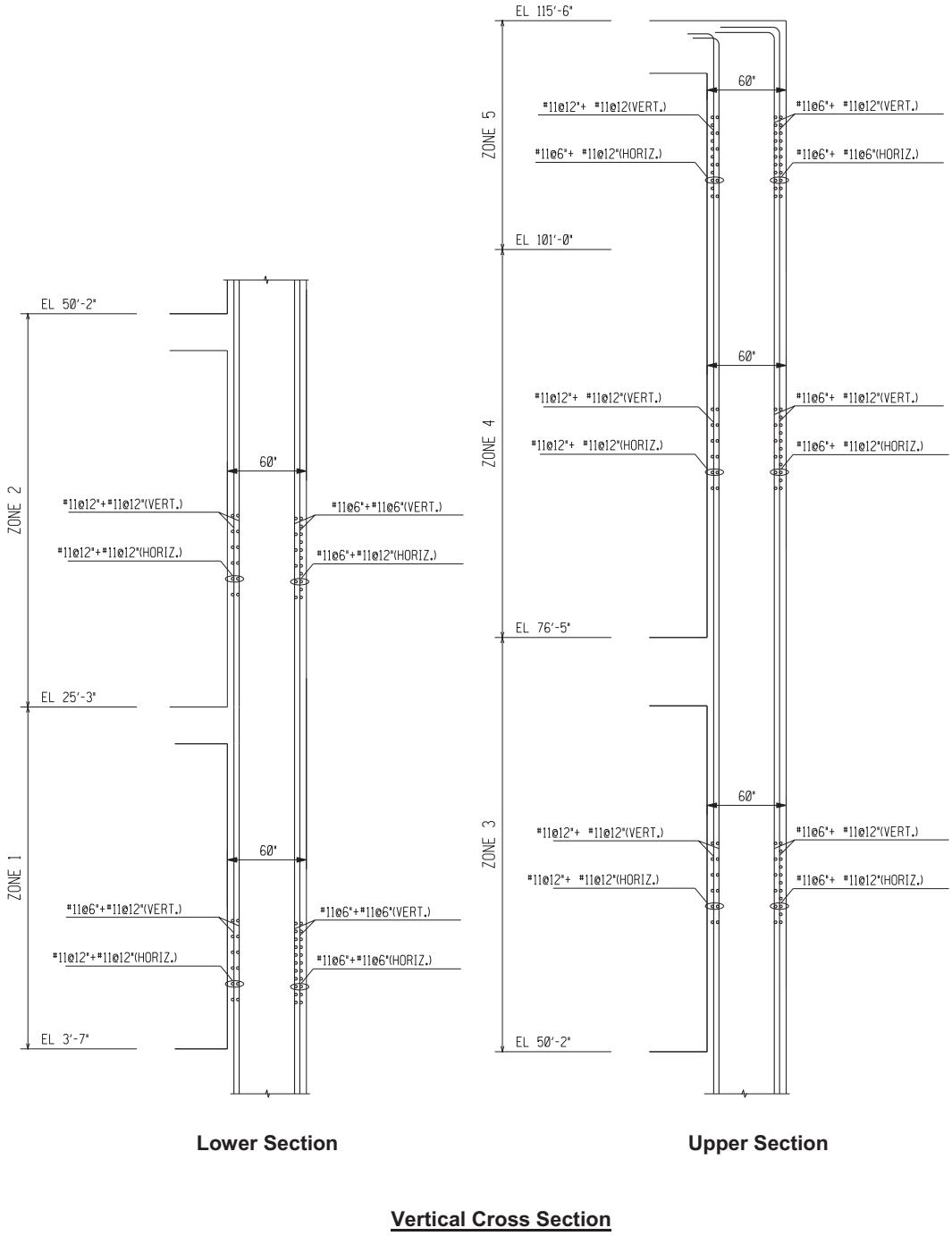

Figure 3.8.4-7 Typical Reinforcement in South Exterior Wall – SECTION 4 (Sheet 1 of 2)

MIC-03-03-00057

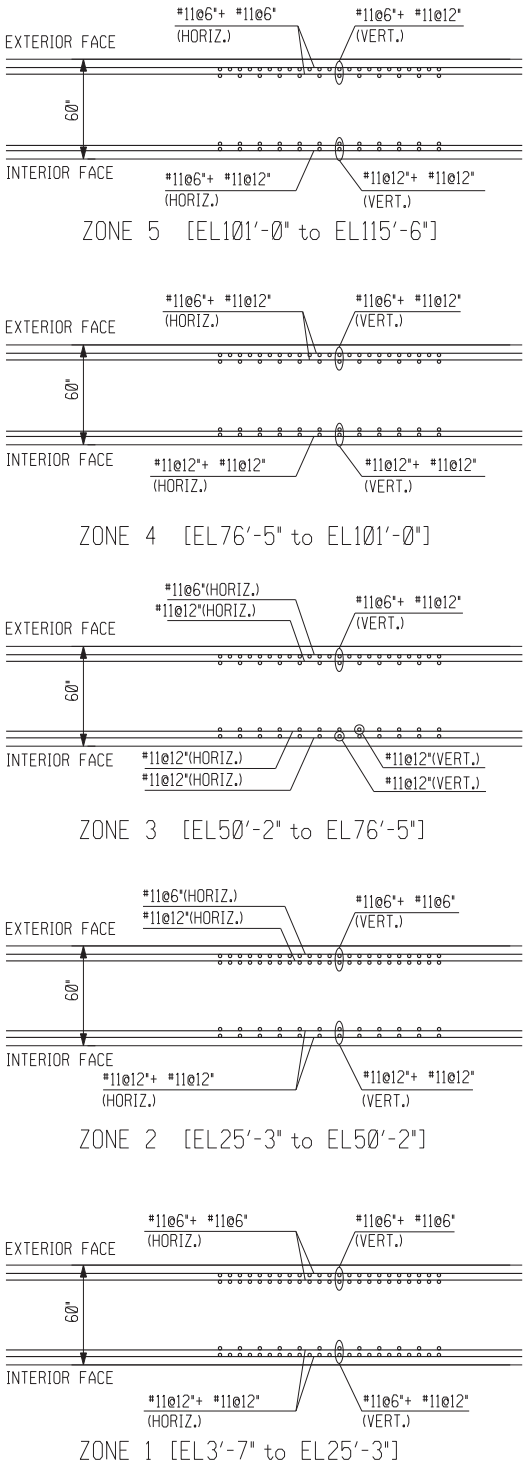

Figure 3.8.4-7 Typical Reinforcement in South Exterior Wall – SECTION 4 (Sheet 2 of 2)

MIC-03-03-00057

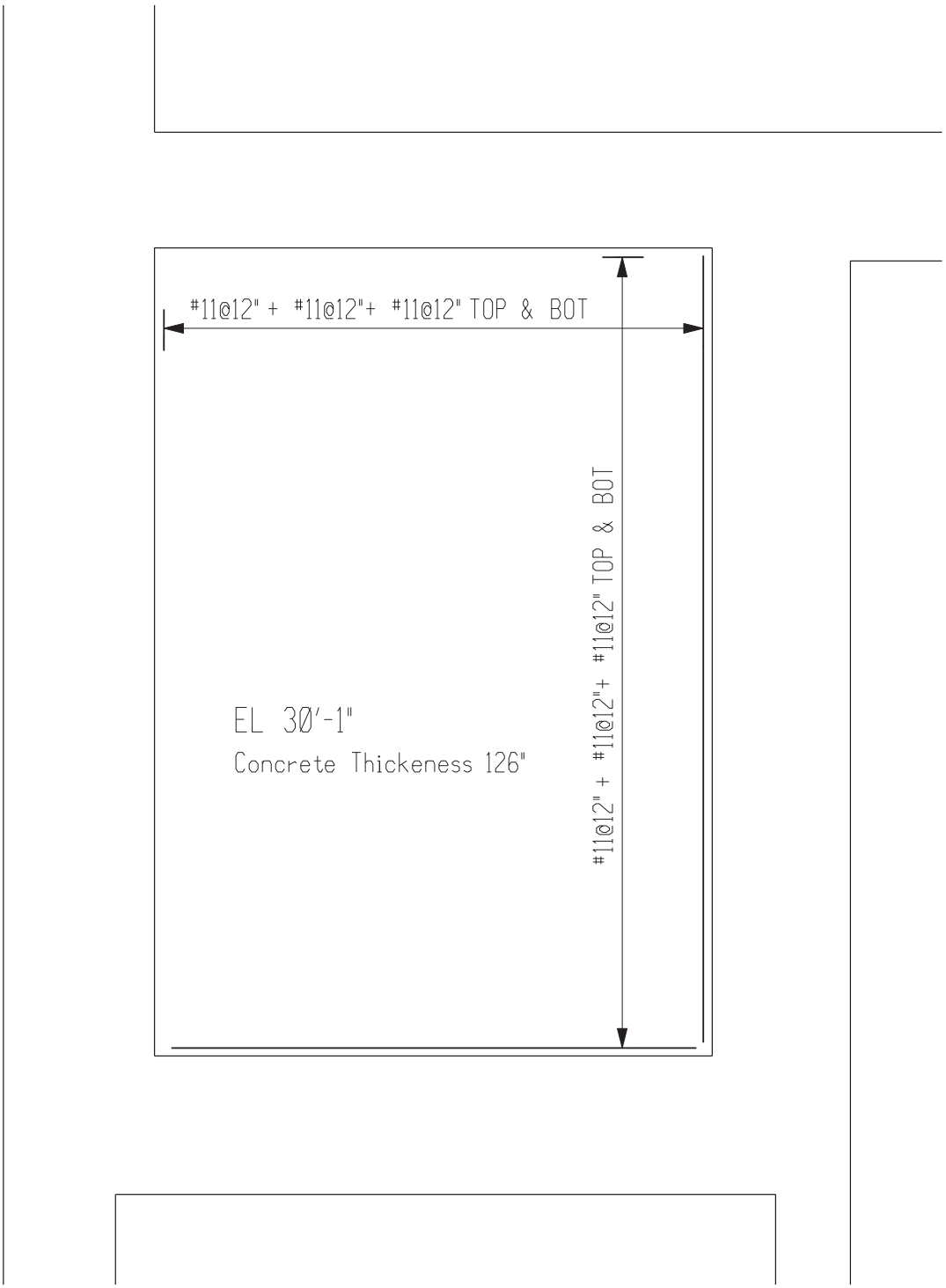

Figure 3.8.4-8 Typical Reinforcement in Spent Fuel Pit Slab – AREA 3

MIC-03-03-00057

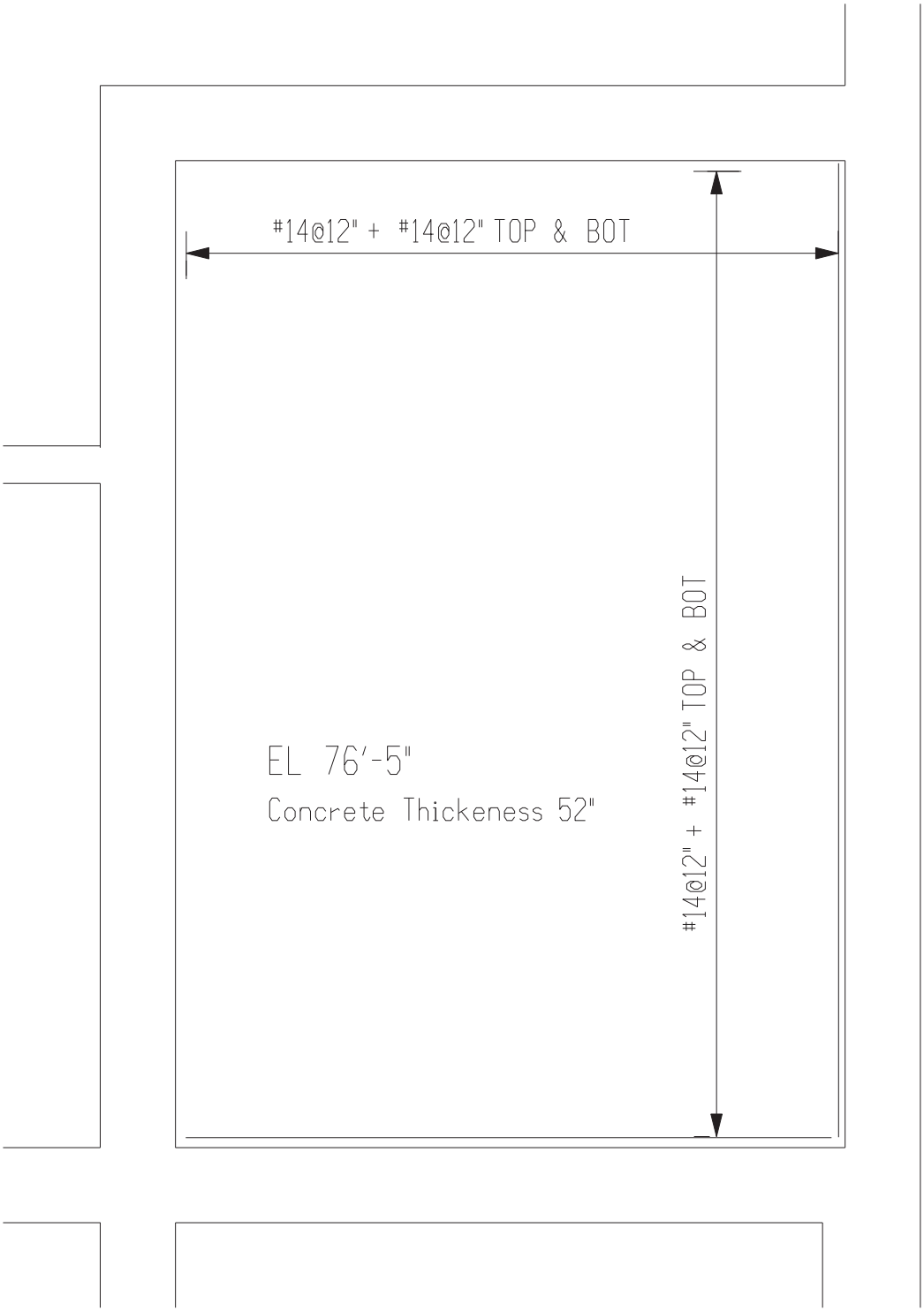

Figure 3.8.4-9 Typical Reinforcement in Emergency Feedwater Pit Slab – AREA 4

MIC-03-03-00057

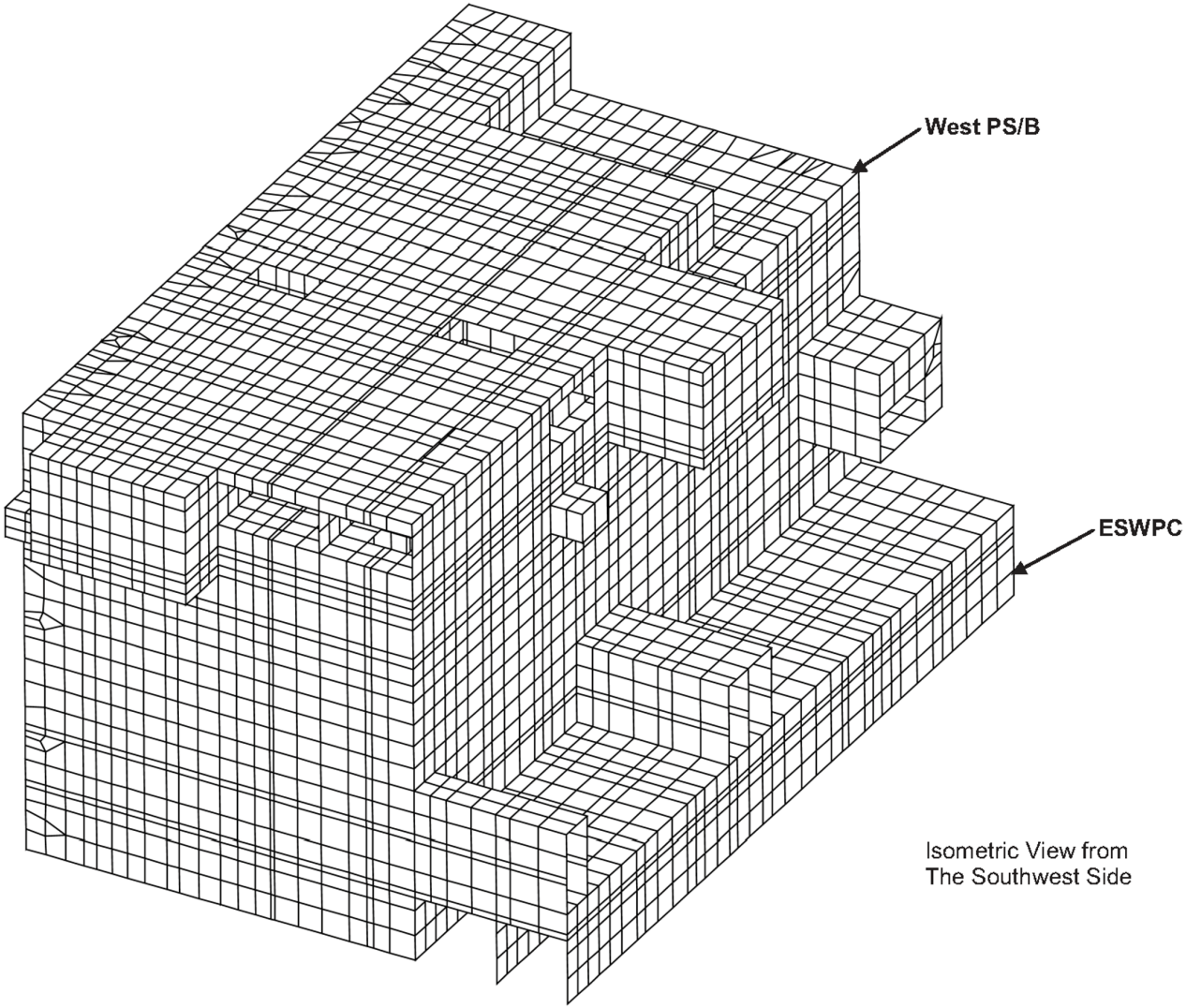

Figure 3.8.4-10 FE Model of West PS/B (Sheet 1 of ~~2~~4)

MIC-03-03-00057

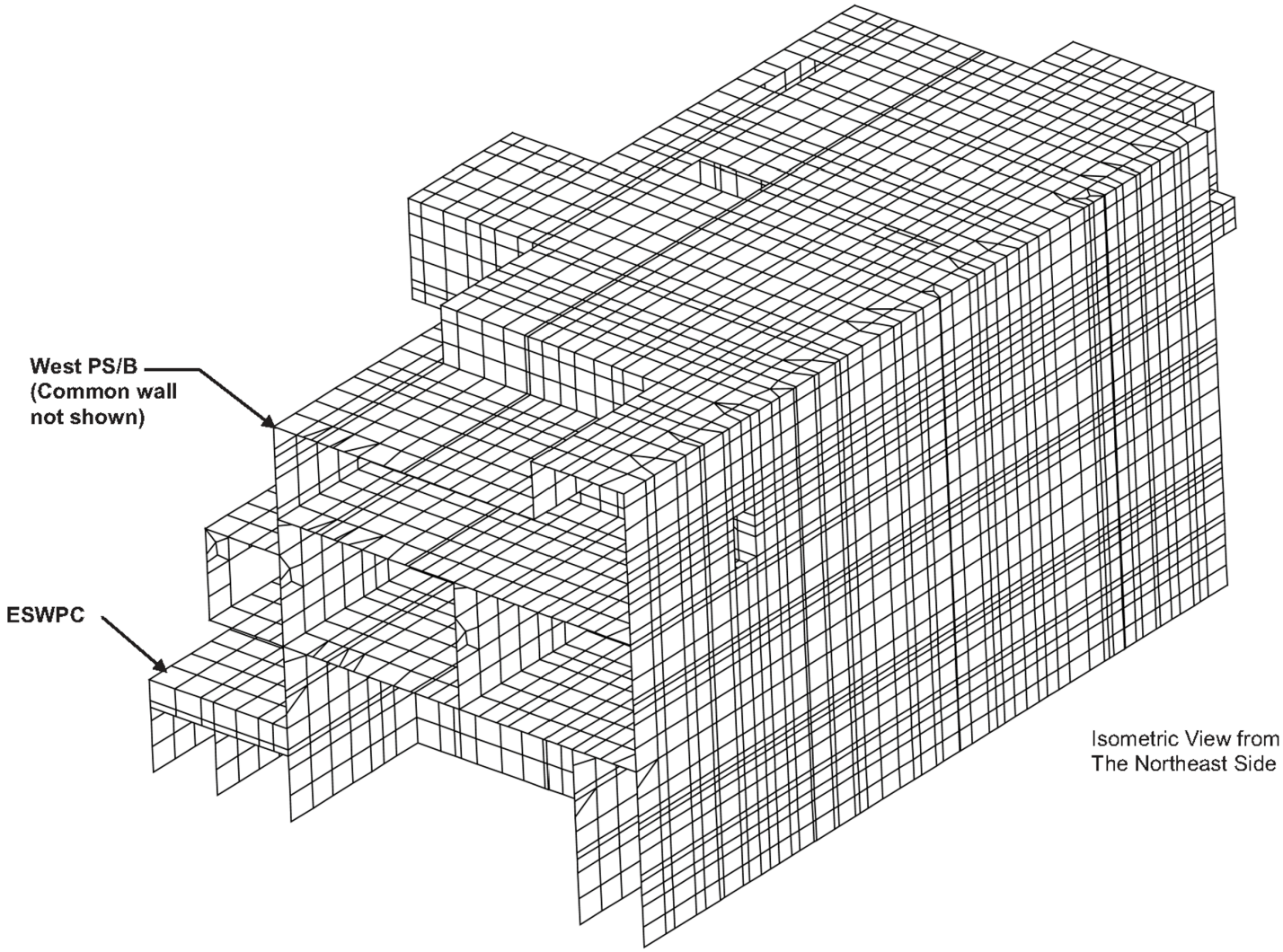

Figure 3.8.4-10 FE Model of West PS/B (Sheet 2 of ~~2~~4)

MIC-03-03-00057

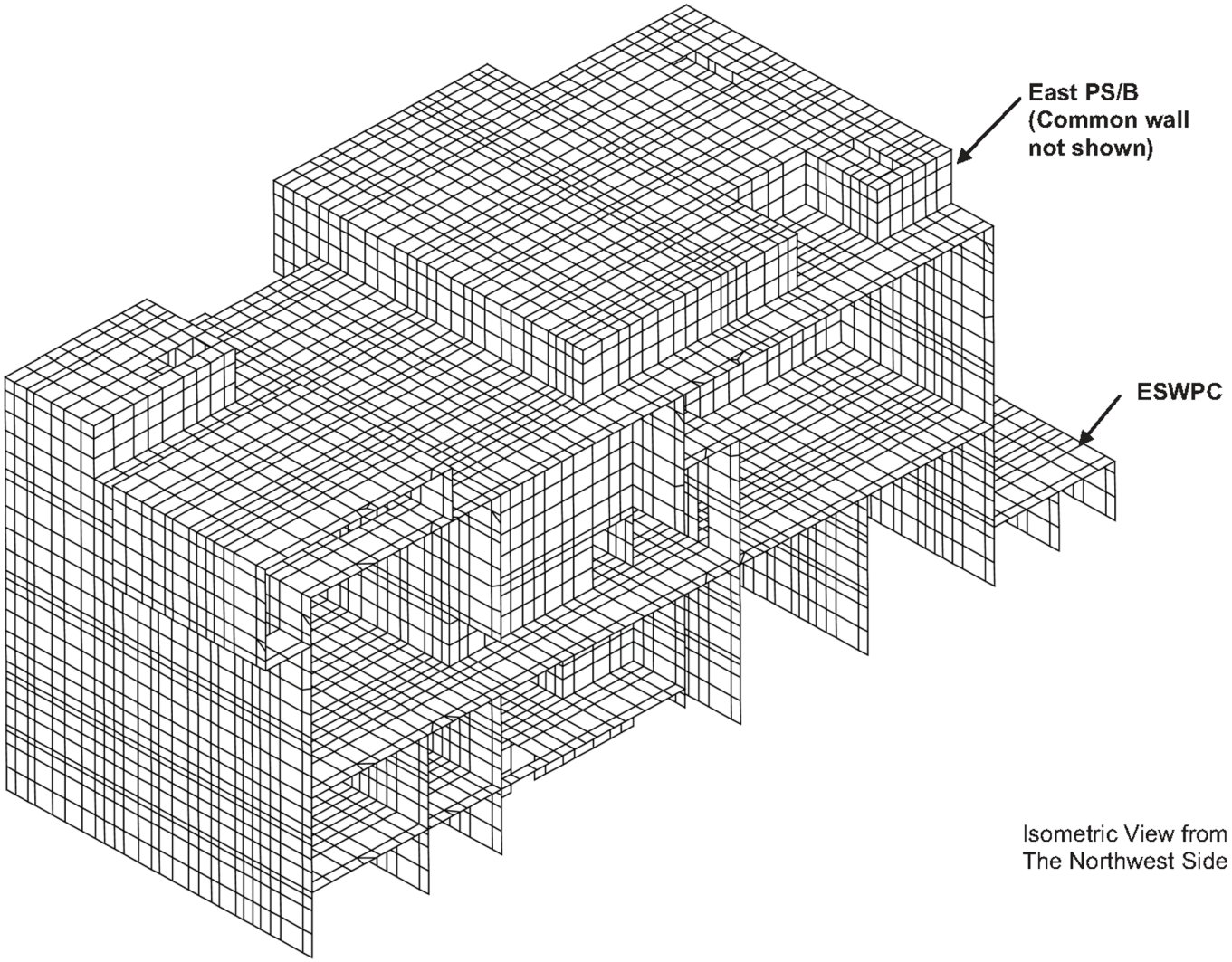

Figure 3.8.4-10 FE Model of West PS/B (Sheet 3 of 4)

MIC-03-03-00057

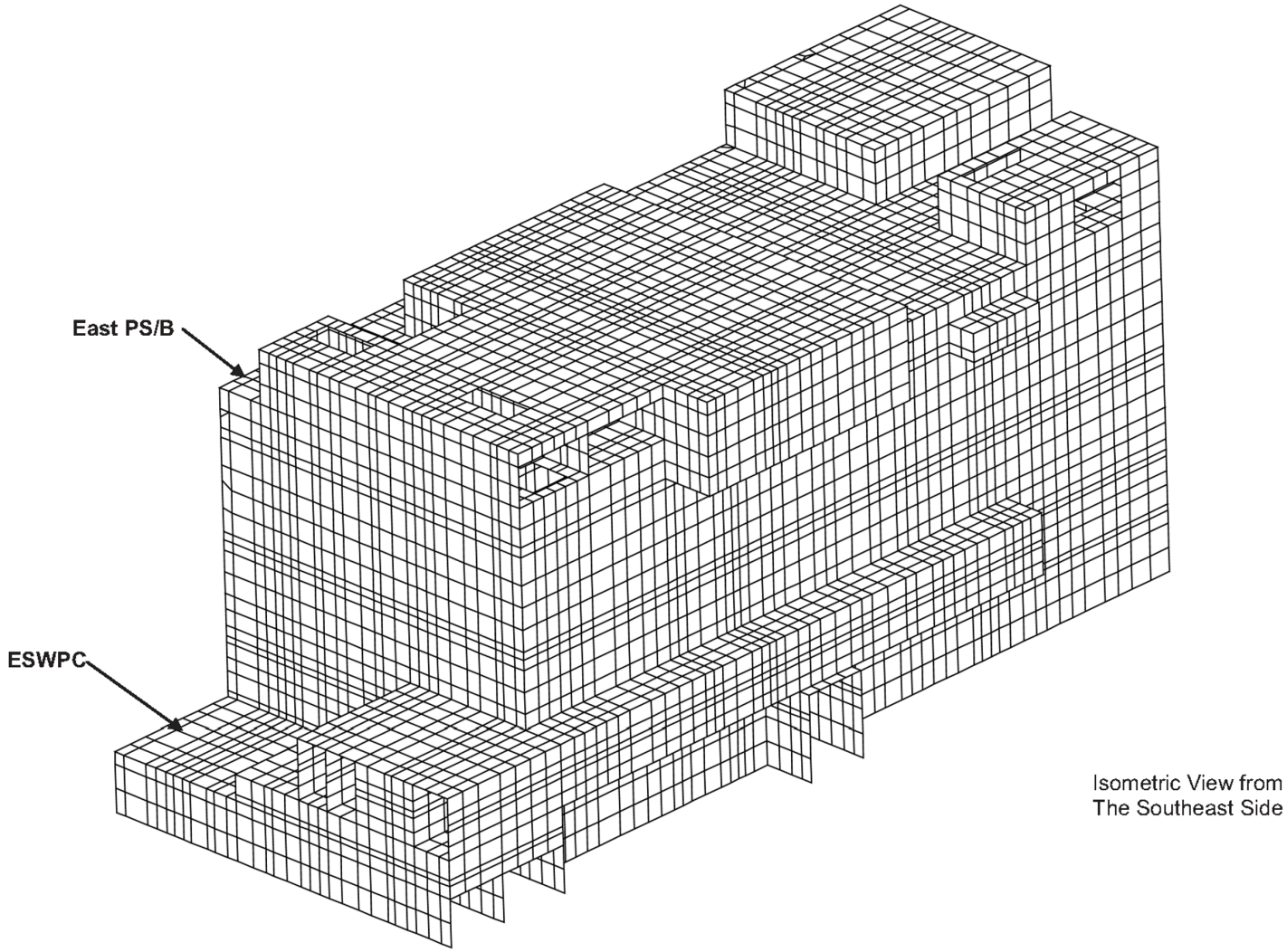

Figure 3.8.4-10 FE Model of West PS/B (Sheet 4 of 4)

MIC-03-03-00057

Security-Related Information – Withheld Under 10 CFR 2.390

Figure 3.8.4-11 West PS/B ~~Basemat and~~ Wall ~~Critical~~Representative Sections (Floor Plan of B1F, EL-26'-4")

MIC-03-03-00057

Security-Related Information – Withheld Under 10 CFR 2.390

Figure 3.8.4-12 West PS/B Wall and Slab ~~Critical~~Representative Sections (Floor Plan of 1F, EL 3'-7")

MIC-03-03-00057

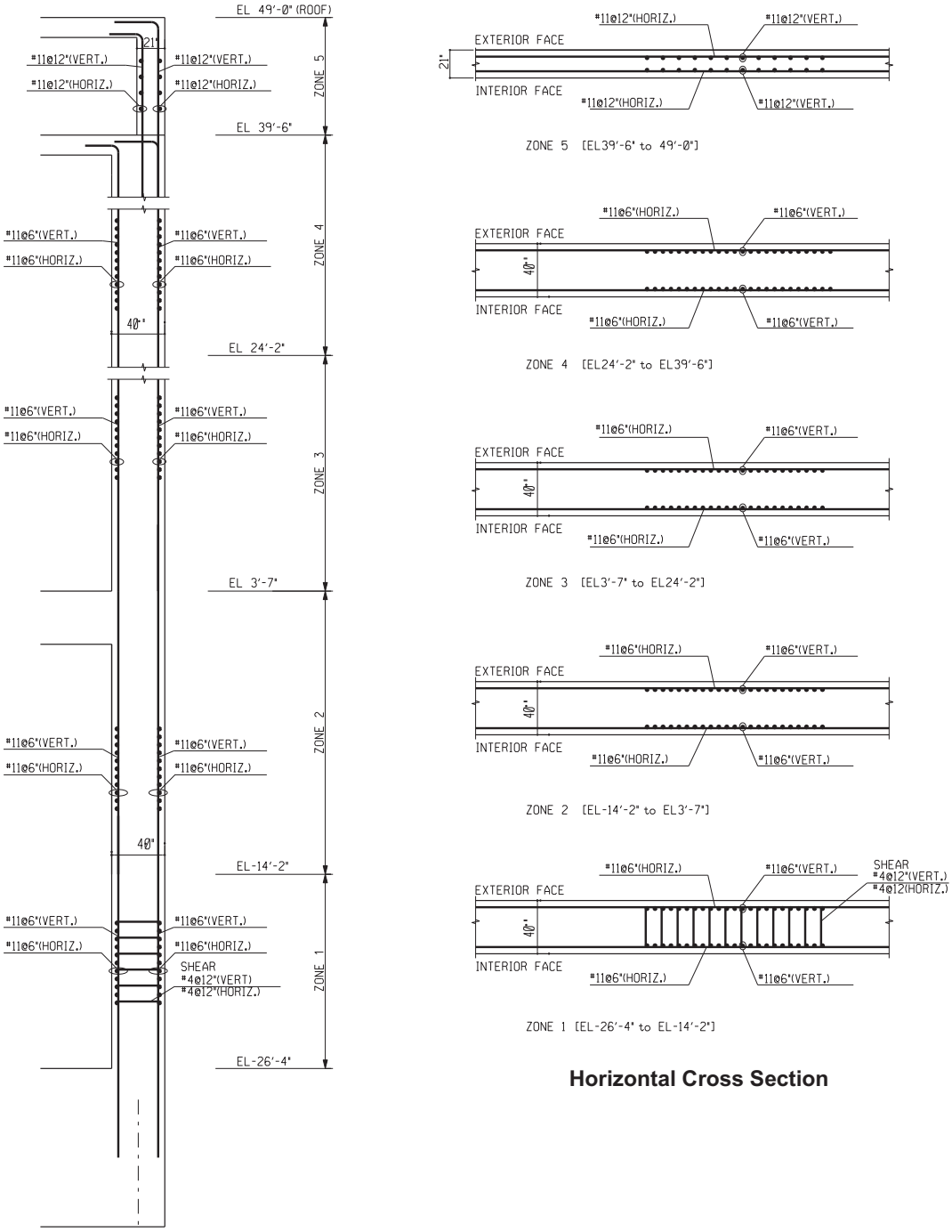

Figure 3.8.4-13 Typical Reinforcement in South Exterior Wall – SECTION 1 (On Column Line CP and Between Column Lines 1P & 2P)

MIC-03-03-00057

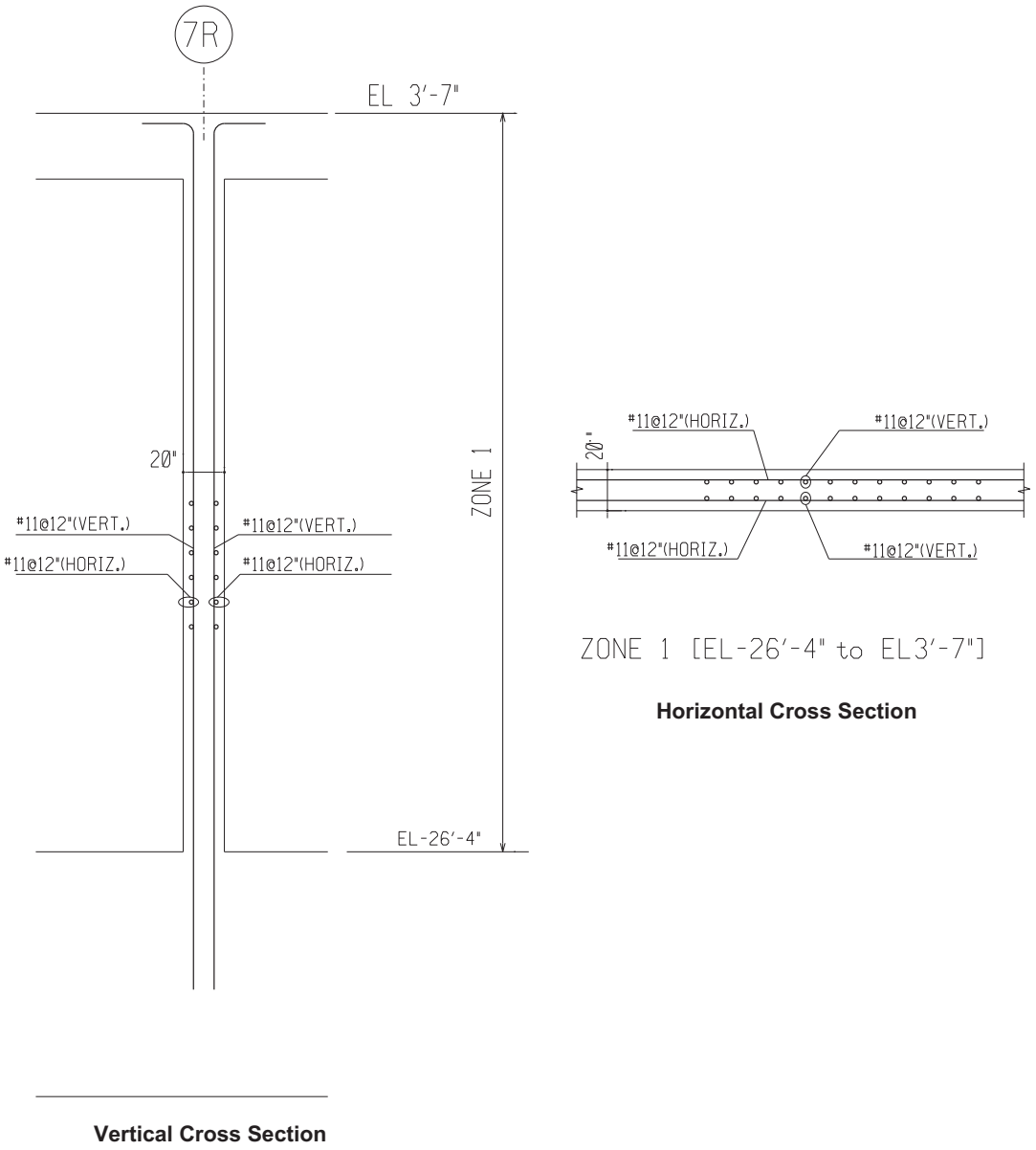

Figure 3.8.4-14 Typical Reinforcement in South Exterior Wall – SECTION 2 (On Column Line 4P and Between Column Lines BP & CP)

MIC-03-03-00057

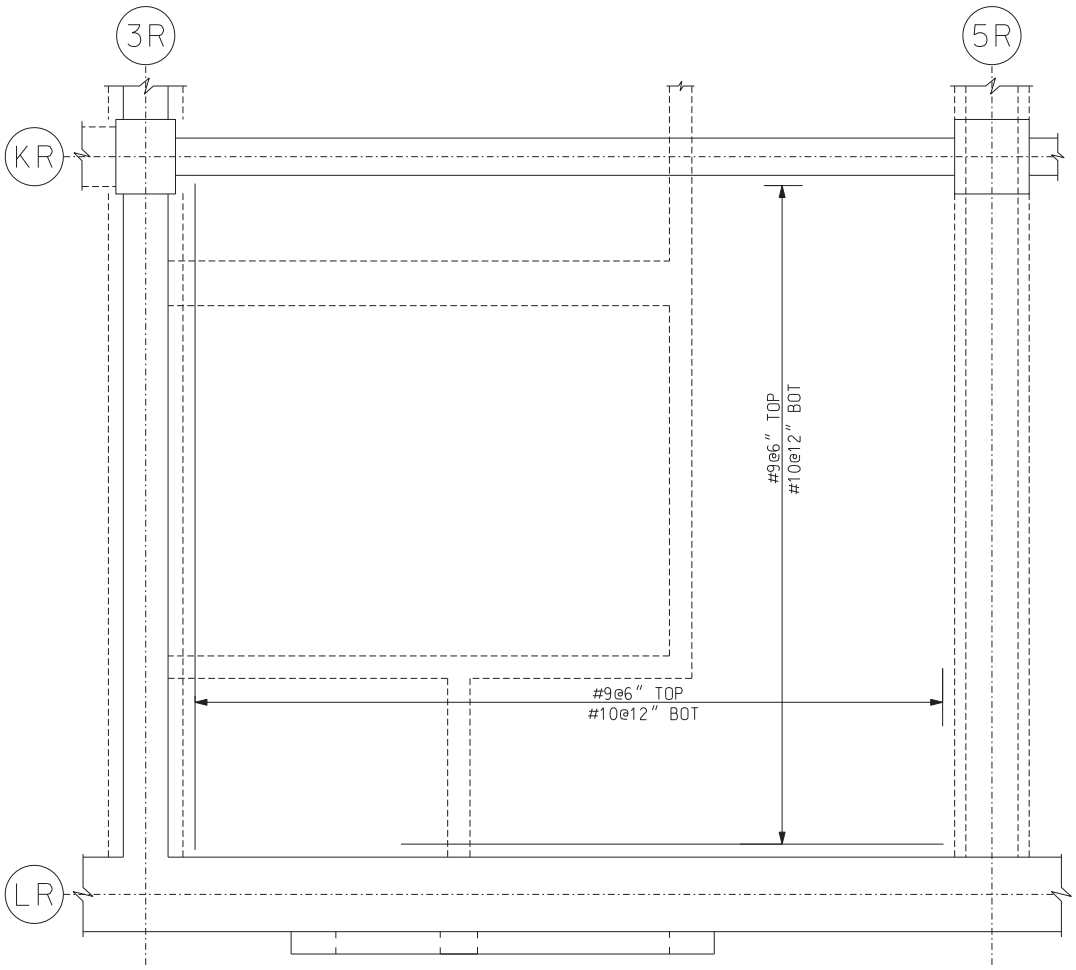

Figure 3.8.4-15 Typical Reinforcement in Floor at Elevation 3′-7″– AREA 1 (Between Column Lines BP & CP - 2P & 3P)

MIC-03-03-00057

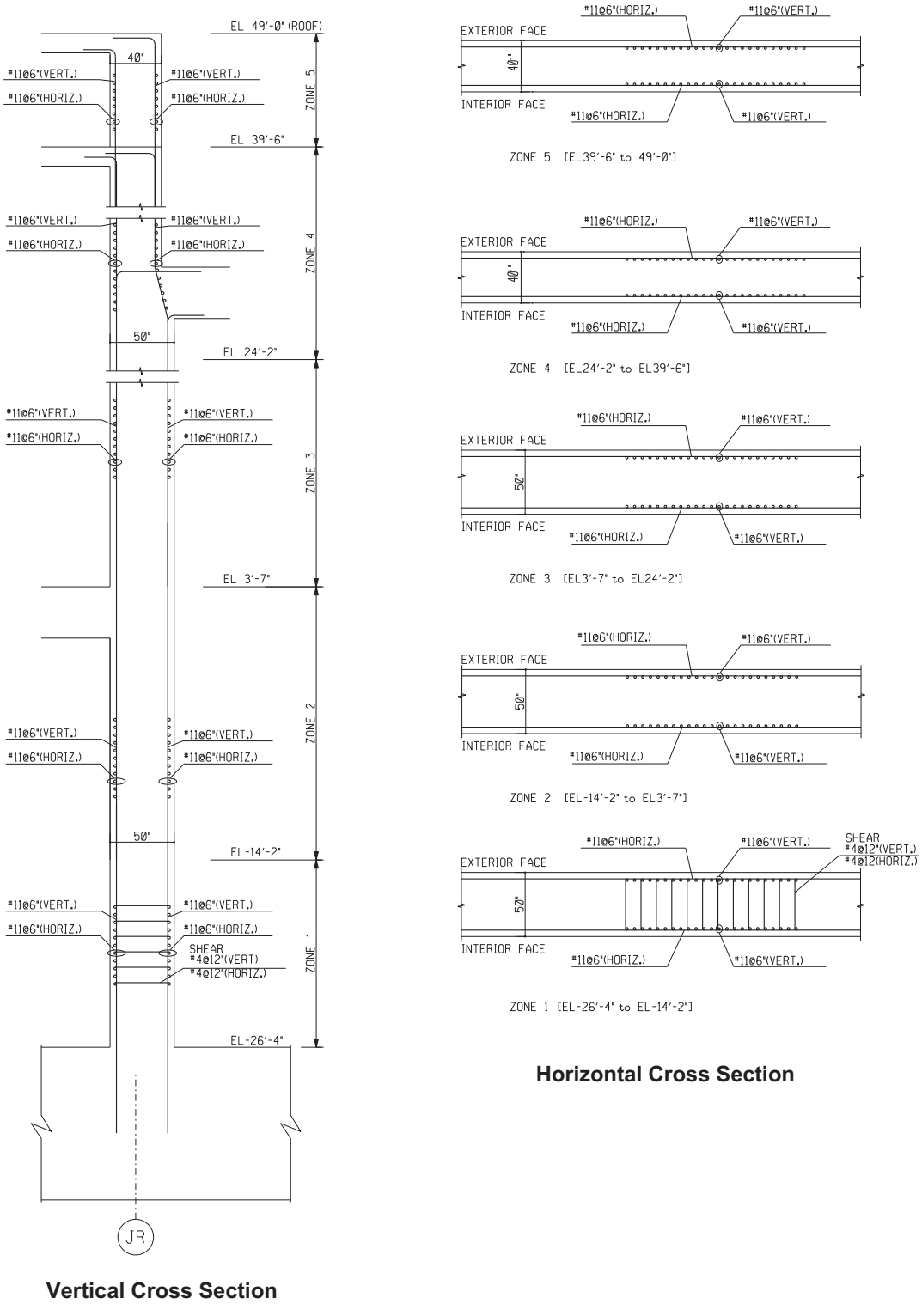

Vertical Cross Section

Horizontal Cross Section

Figure 3.8.4-16 Typical Reinforcement in West PS/B North Wall – Section 3 (On Column Line JR and Between Column Lines 1R & 3R)

MIC-03-03-00057

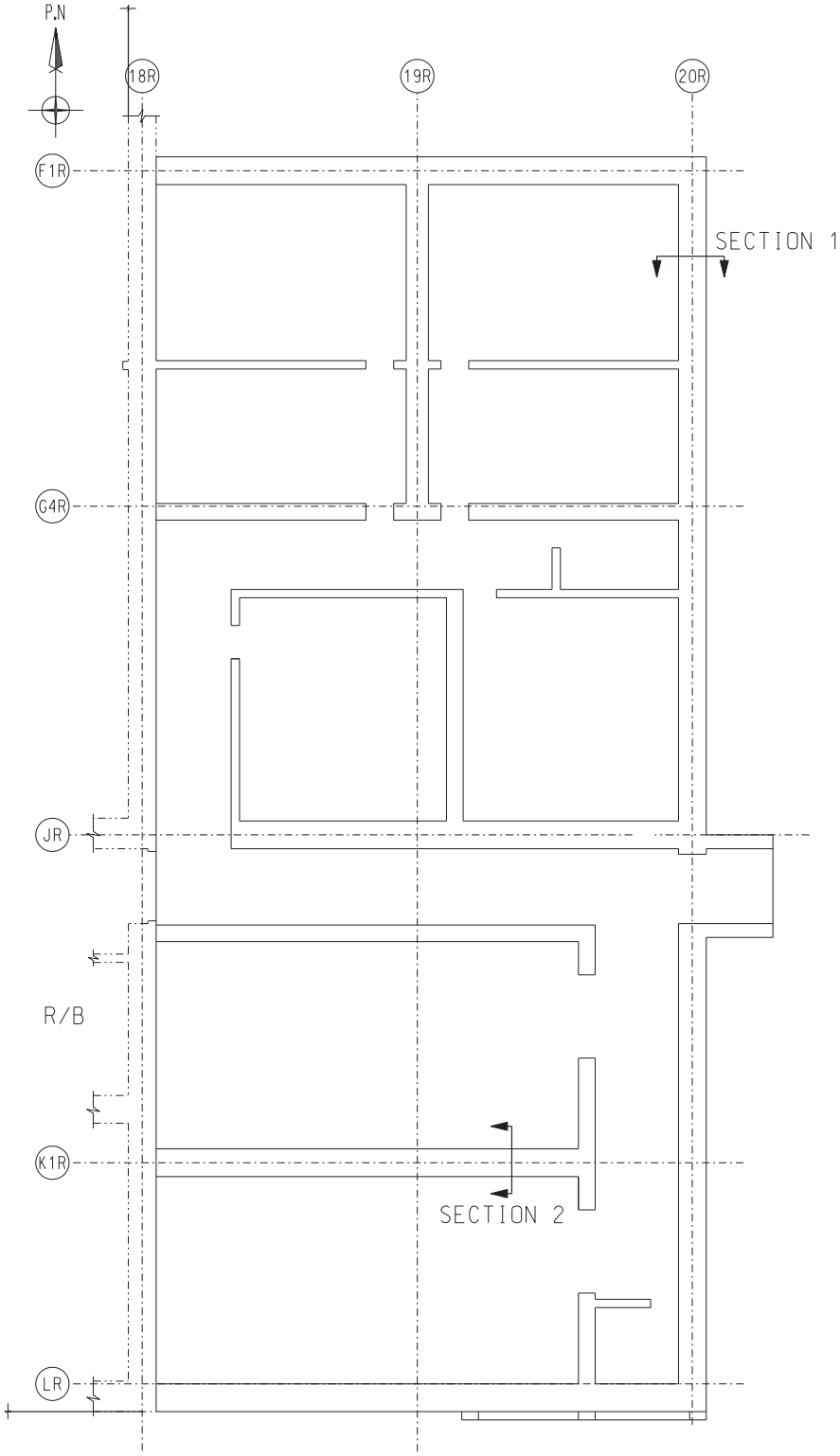

Figure 3.8.4-17 East PS/B Wall Representative Sections (Floor Plan of B1F, El -26'-4")

MIC-03-03-00057

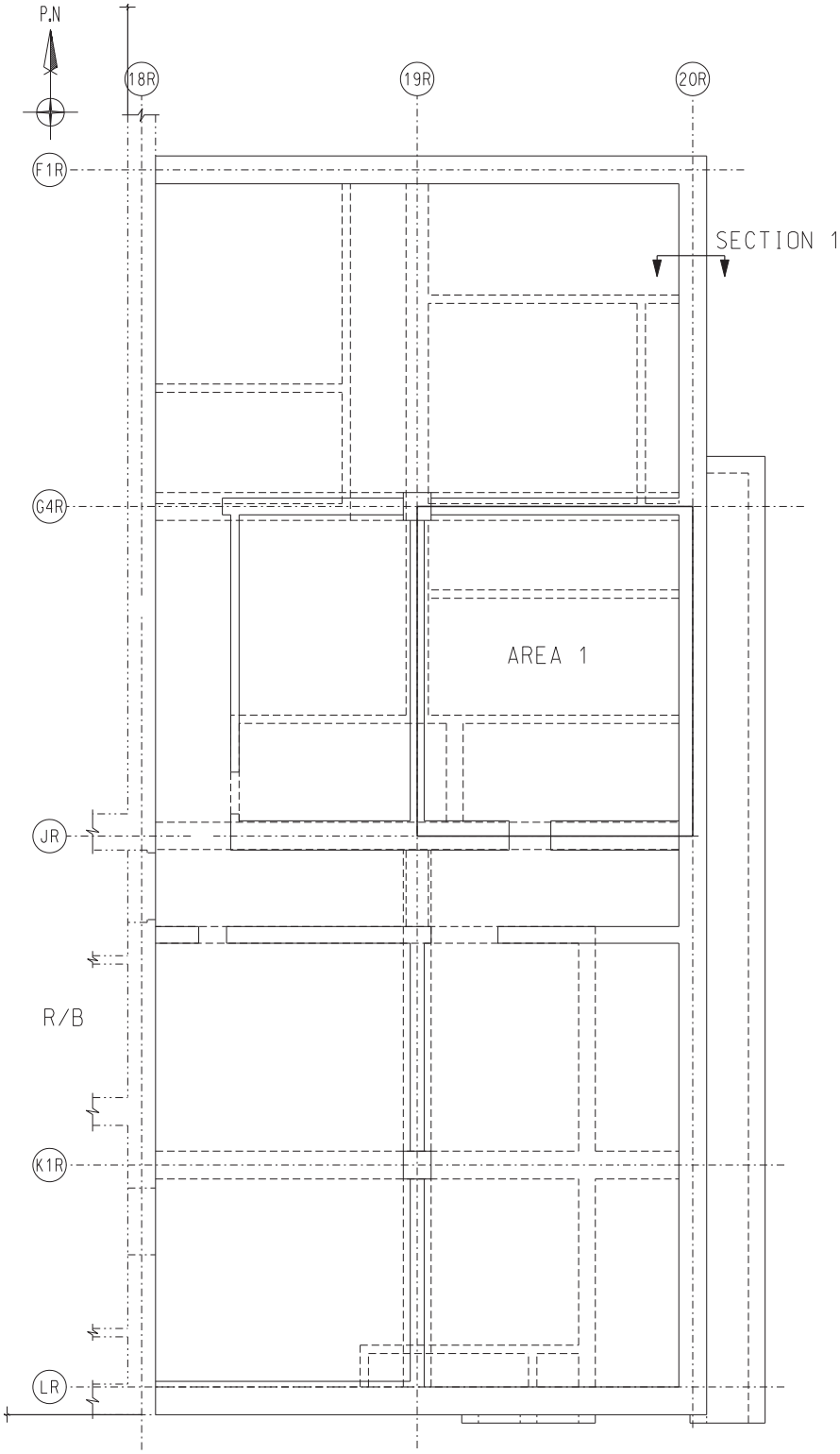

Figure 3.8.4-18 East PS/B Wall and Slab Representative Elements (Floor Plan of 1F, EL 3'-7")

MIC-03-03-00057

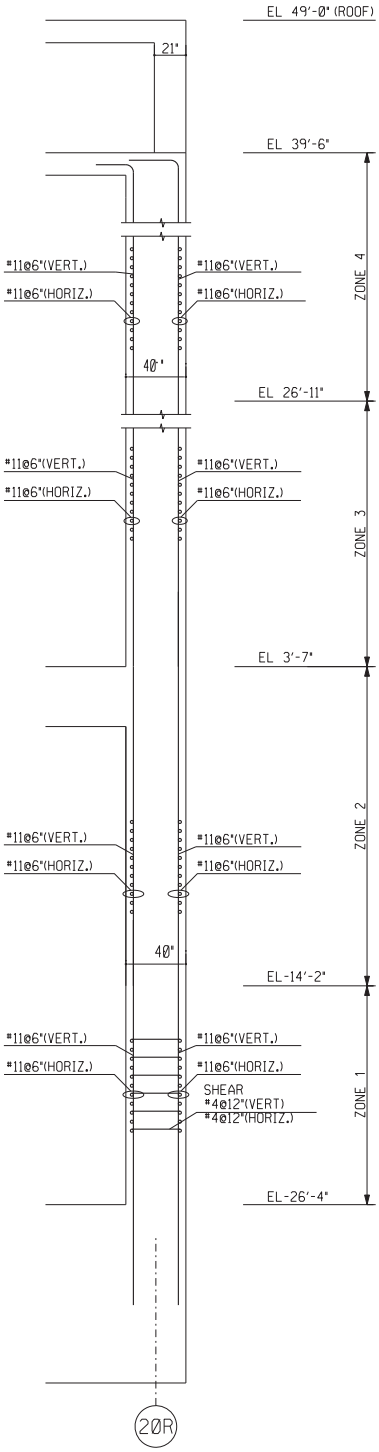

Vertical Cross Section

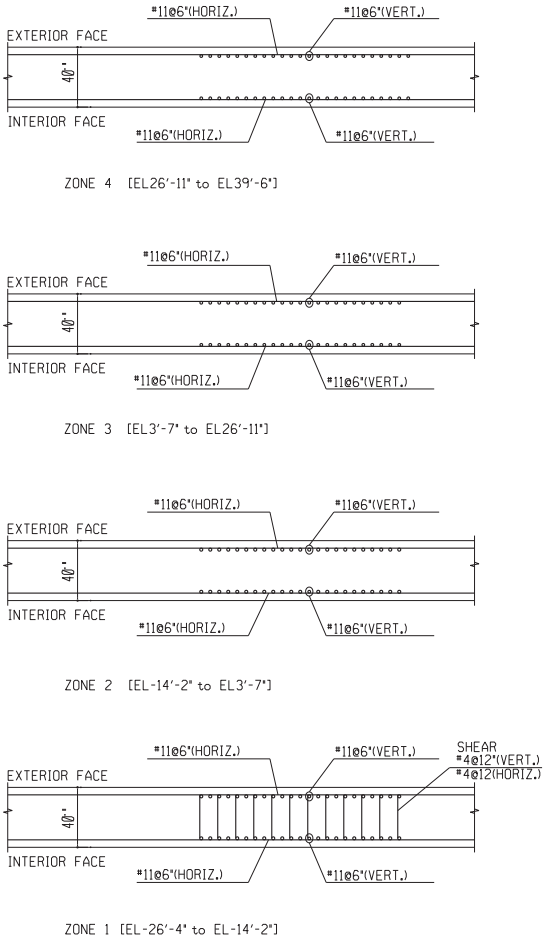

Horizontal Cross Section

Figure 3.8.4-19 Typical Reinforcement in East PS/B East Exterior Wall – SECTION 1 (On Column Line 20R and Between Column Lines F1R & G4R)

MIC-03-03-00057

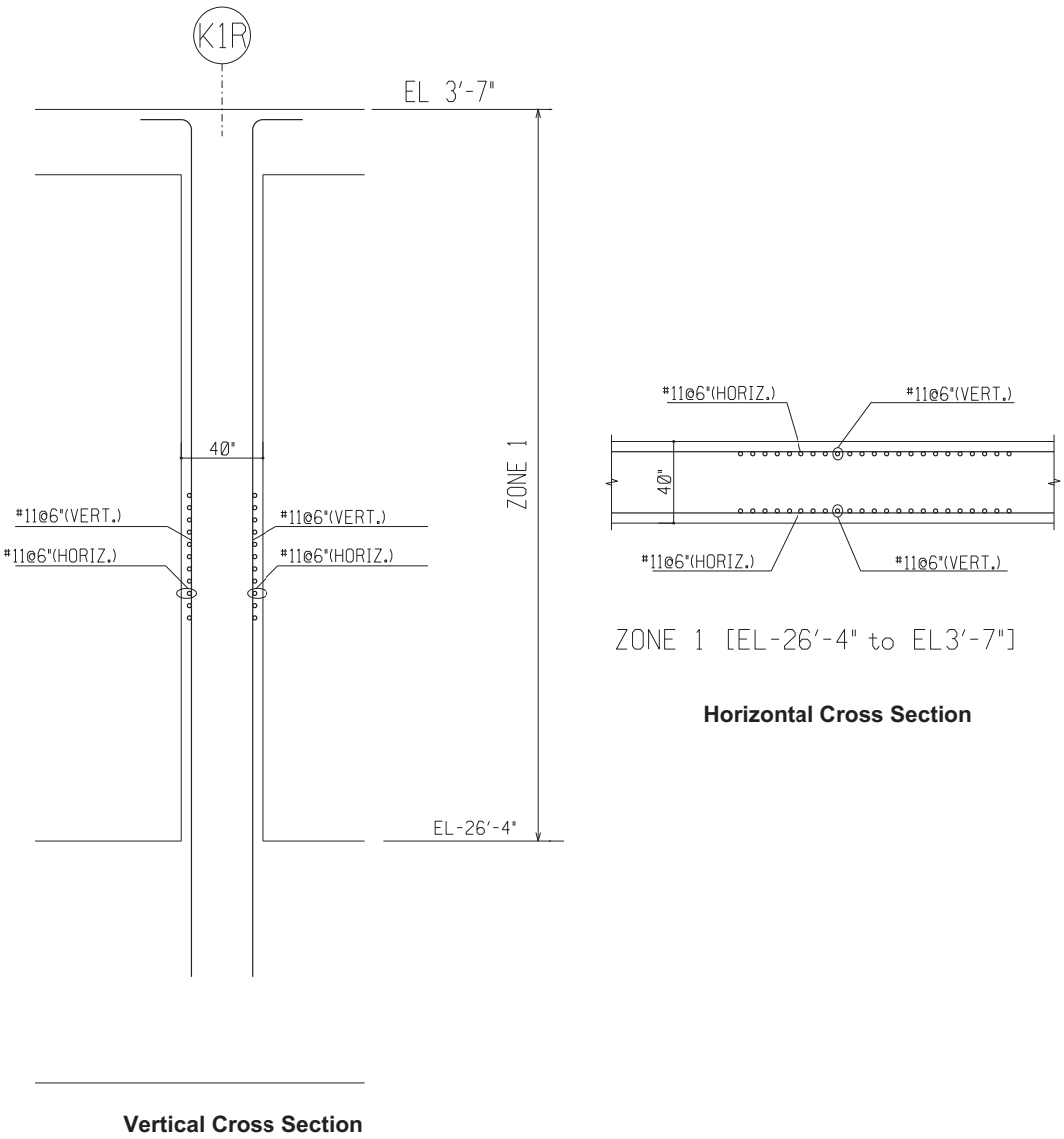

Figure 3.8.4-20 Typical Reinforcement in East PS/B Interior Wall – SECTION 2 (On Column Line K1R and Between Column Lines 18R & 20R)

MIC-03-03-00057

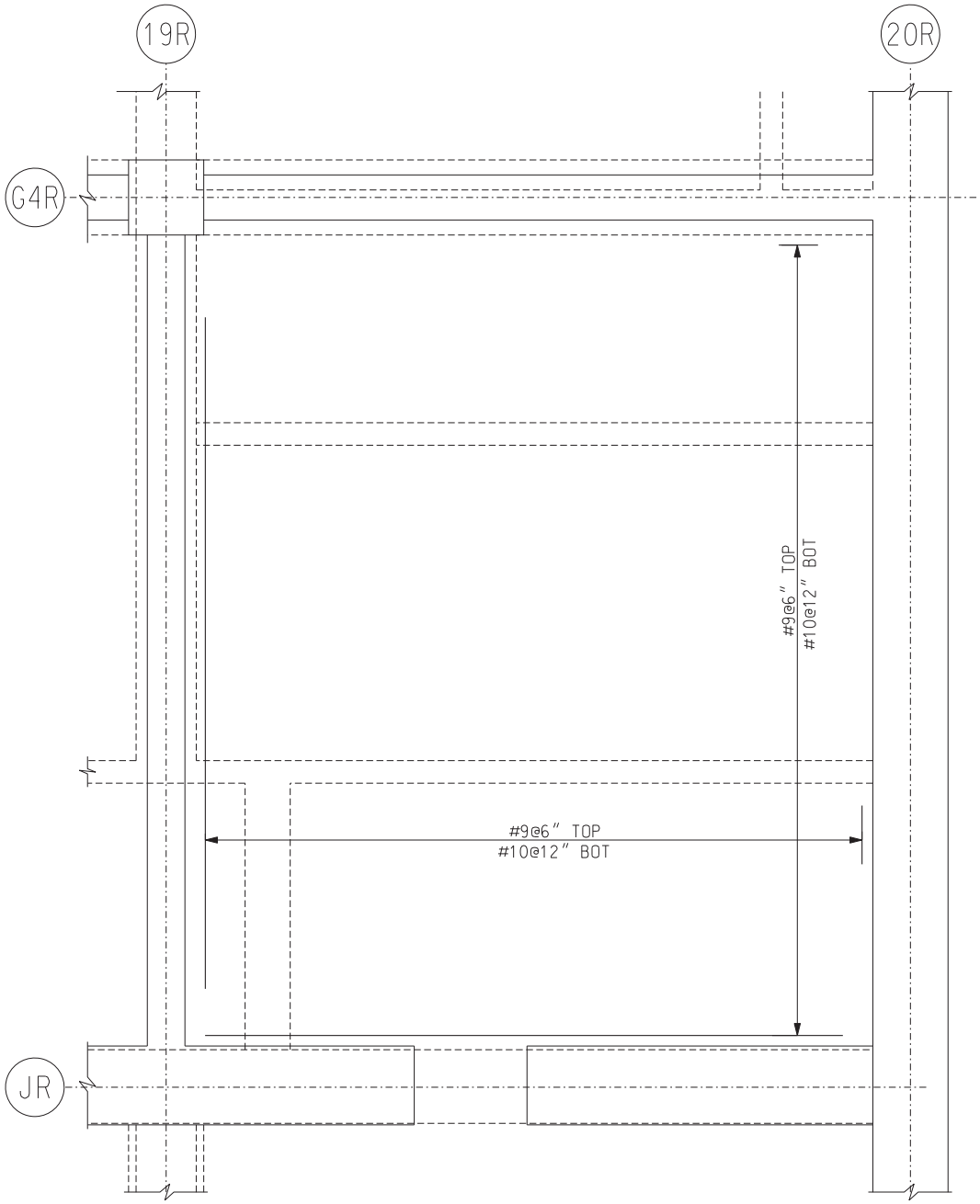

Figure 3.8.4-21 Typical Reinforcement in Floor at Elevation 3′-7″– AREA 1 (Between Column Lines 19R & 20R – G4R & JR)

MIC-03-03-00057

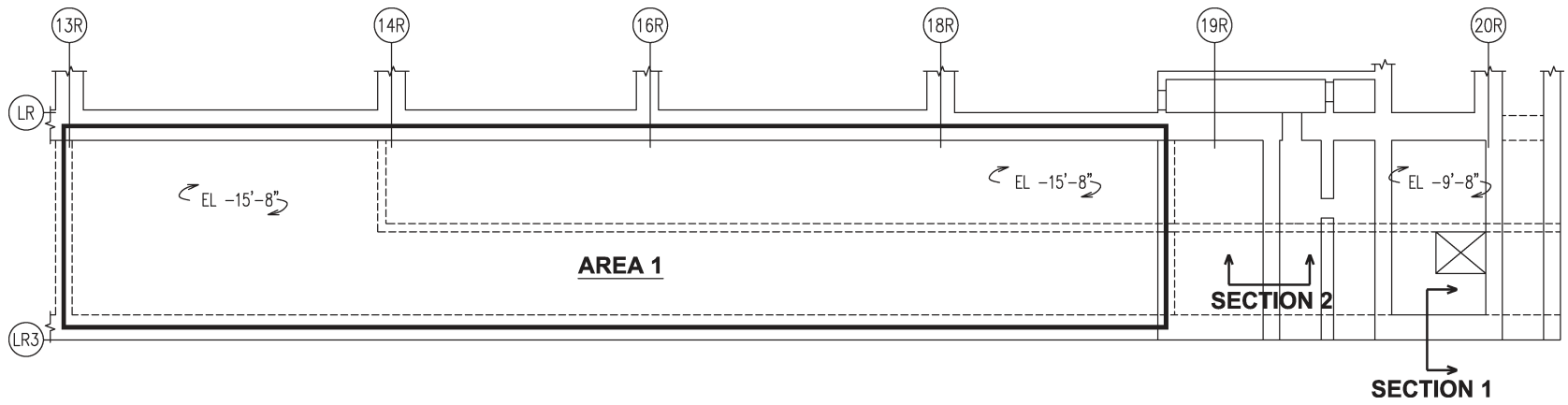

Figure 3.8.4-22 ESWPC Representative Elements (Floor Plan of East ESWPC, EL -15'-8")

MIC-03-03-00057

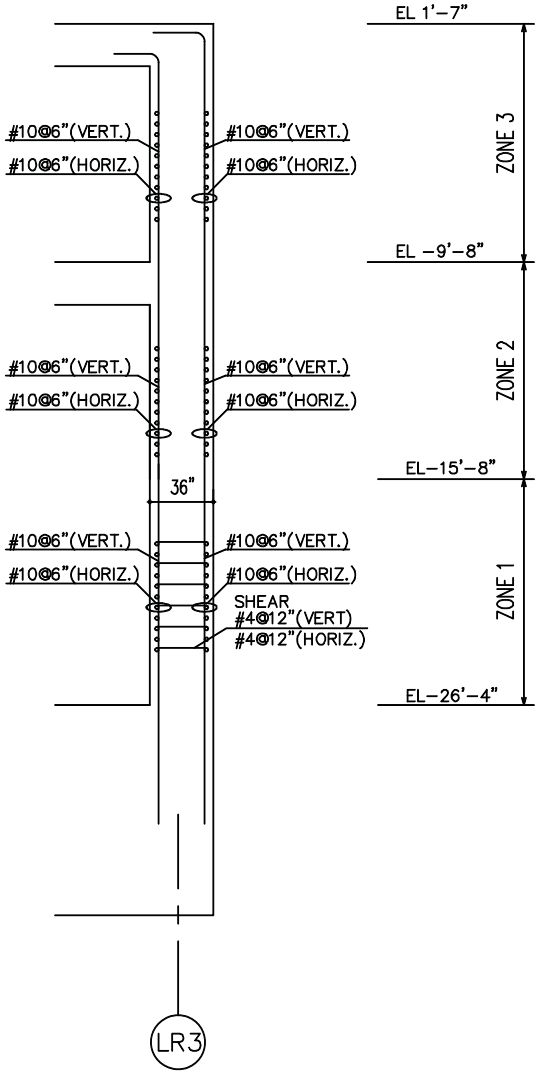

Vertical Cross Section

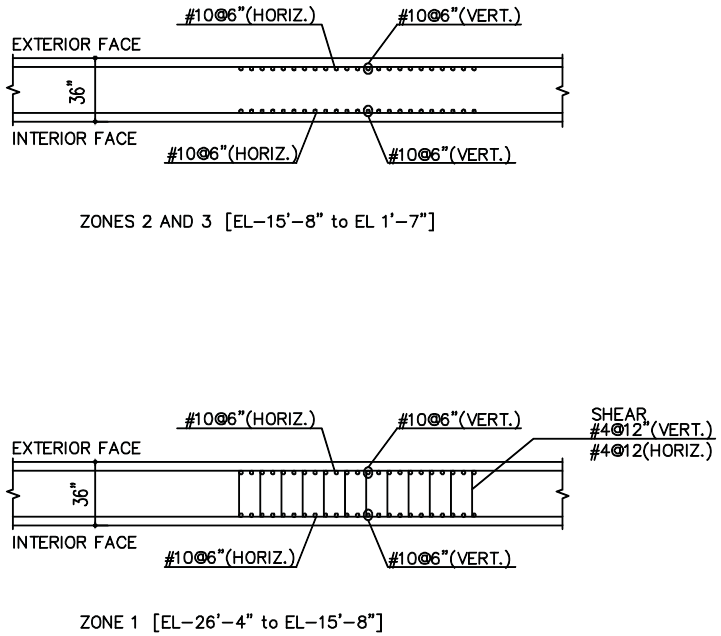

Horizontal Cross Section

Figure 3.8.4-23 Typical Reinforcement in ESWPC Exterior Wall– SECTION 1 (On Column Line LR3 and Between Column Lines 20R & 19R8)

MIC-03-03-00057

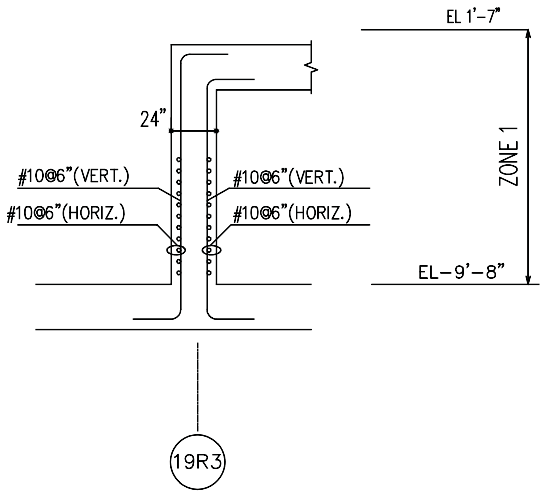

Vertical Cross Section

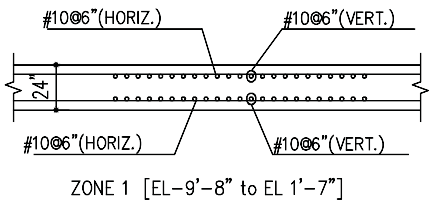

Horizontal Cross Section

Figure 3.8.4-24 Typical Reinforcement in ESWPC Interior Wall – SECTION 2 (On Column Line 19R3 and Between Column Lines LR & LR3)

MIC-03-03-00057

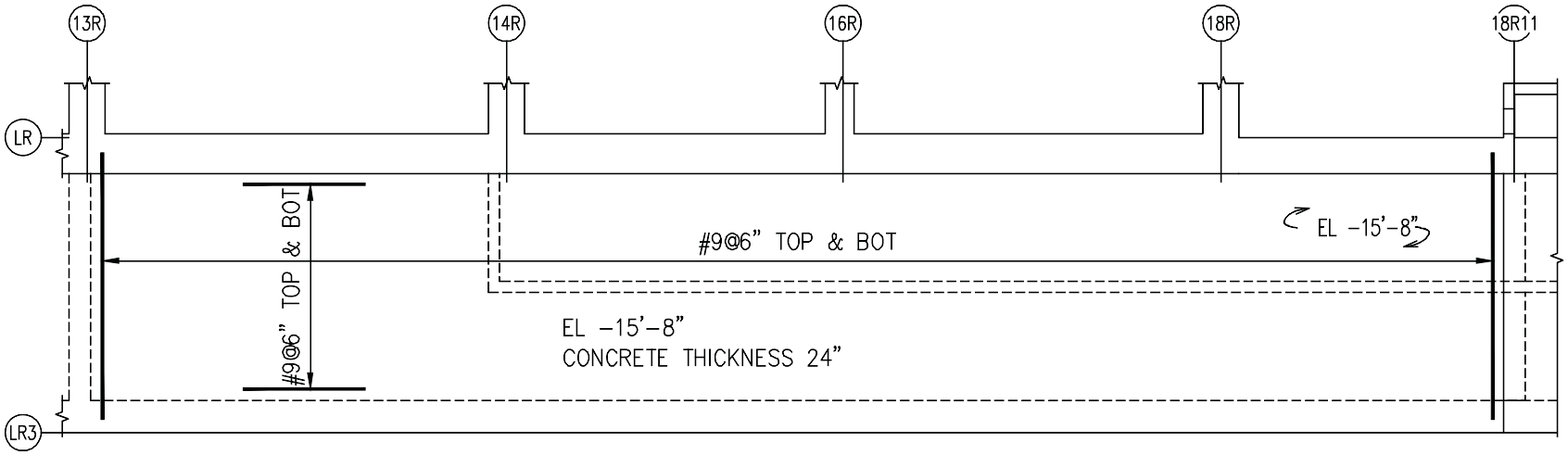

Figure 3.8.4-25 Typical Reinforcement in Slab at Elevation -15′-8″– AREA 1 (Between Column Lines LR & LR3 – 13R & 18R11)

MIC-03-03-00057

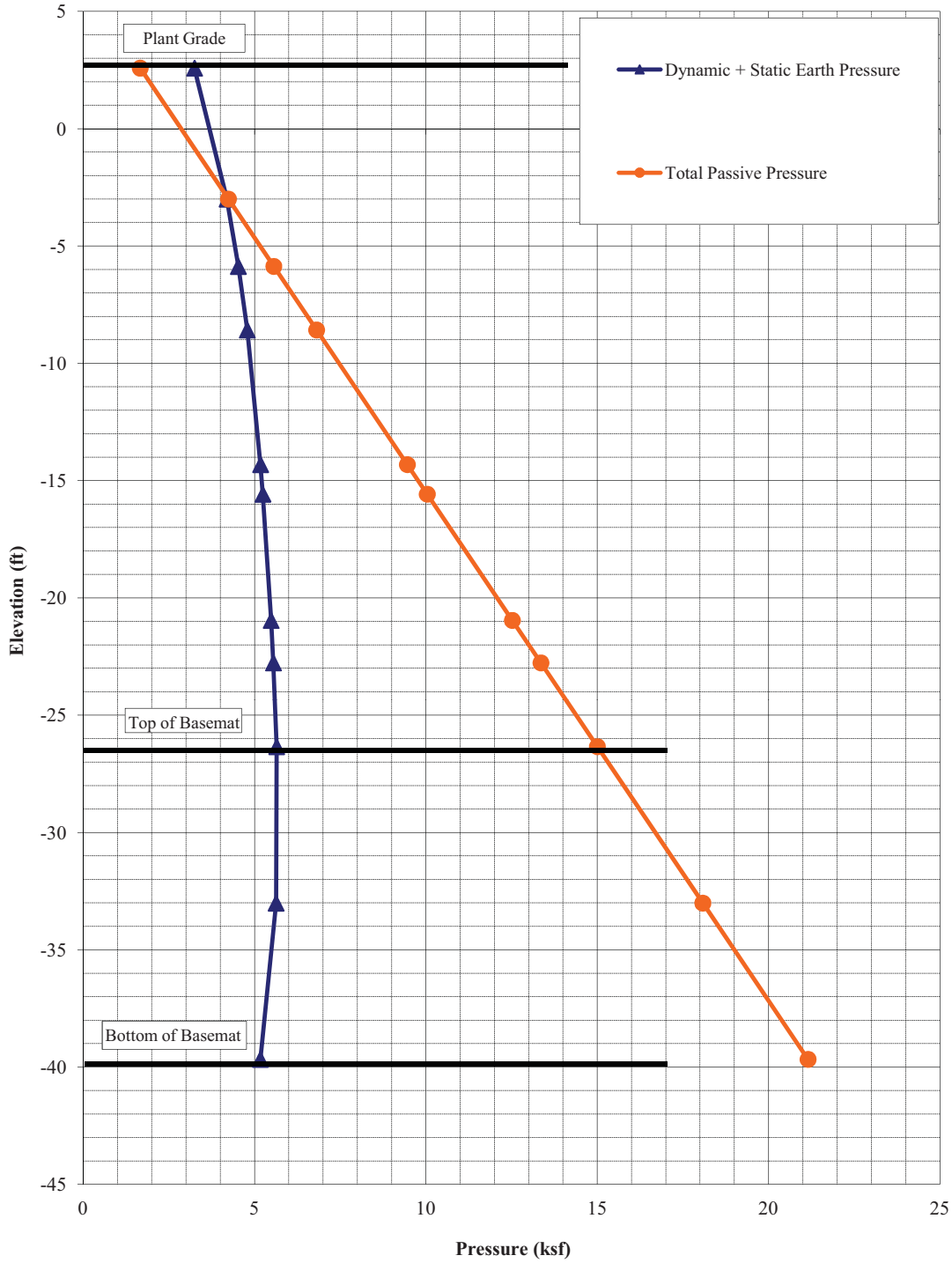

Figure 3.8.4-26 Dynamic & Static Lateral Earth Pressure vs. Passive Earth Pressure

MIC-03-03-00057

Security-Related Information – Withheld Under 10 CFR 2.390

Figure 3.8.5-1 Floor Plan of 1F (El. -3'-7")

MIC-03-03-00057

Security-Related Information – Withheld Under 10 CFR 2.390

Figure 3.8.5-2 Cross Section of a North-South Orientation

MIC-03-03-00057

Security-Related Information – Withheld Under 10 CFR 2.390

Figure 3.8.5-3 Cross Section of an East-West Orientation

MIC-03-03-00057

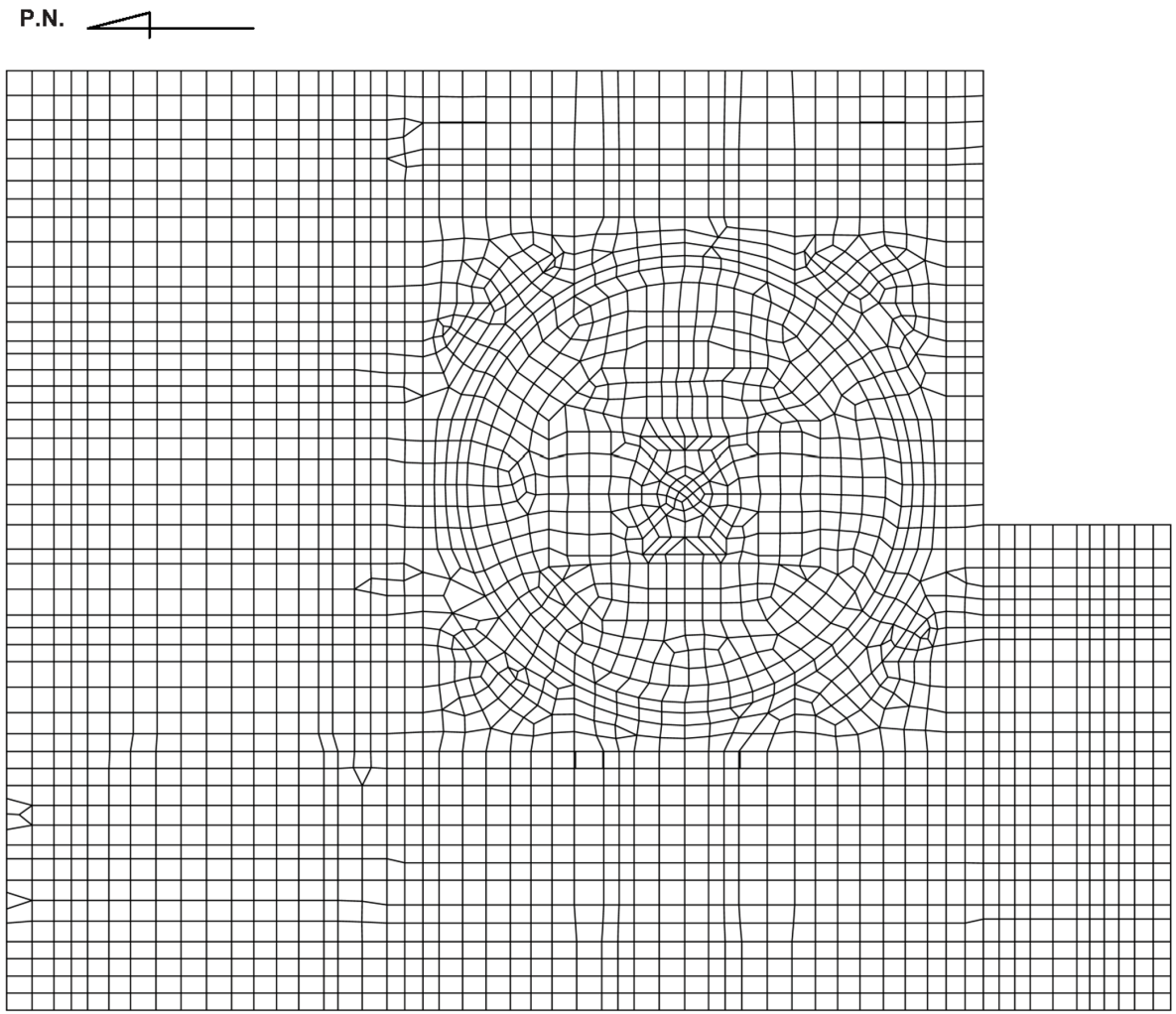

Figure 3.8.5-5 R/B, PCCV, and Containment Internal Structure Basemat ~~Foundation~~

MIC-03-03-00057

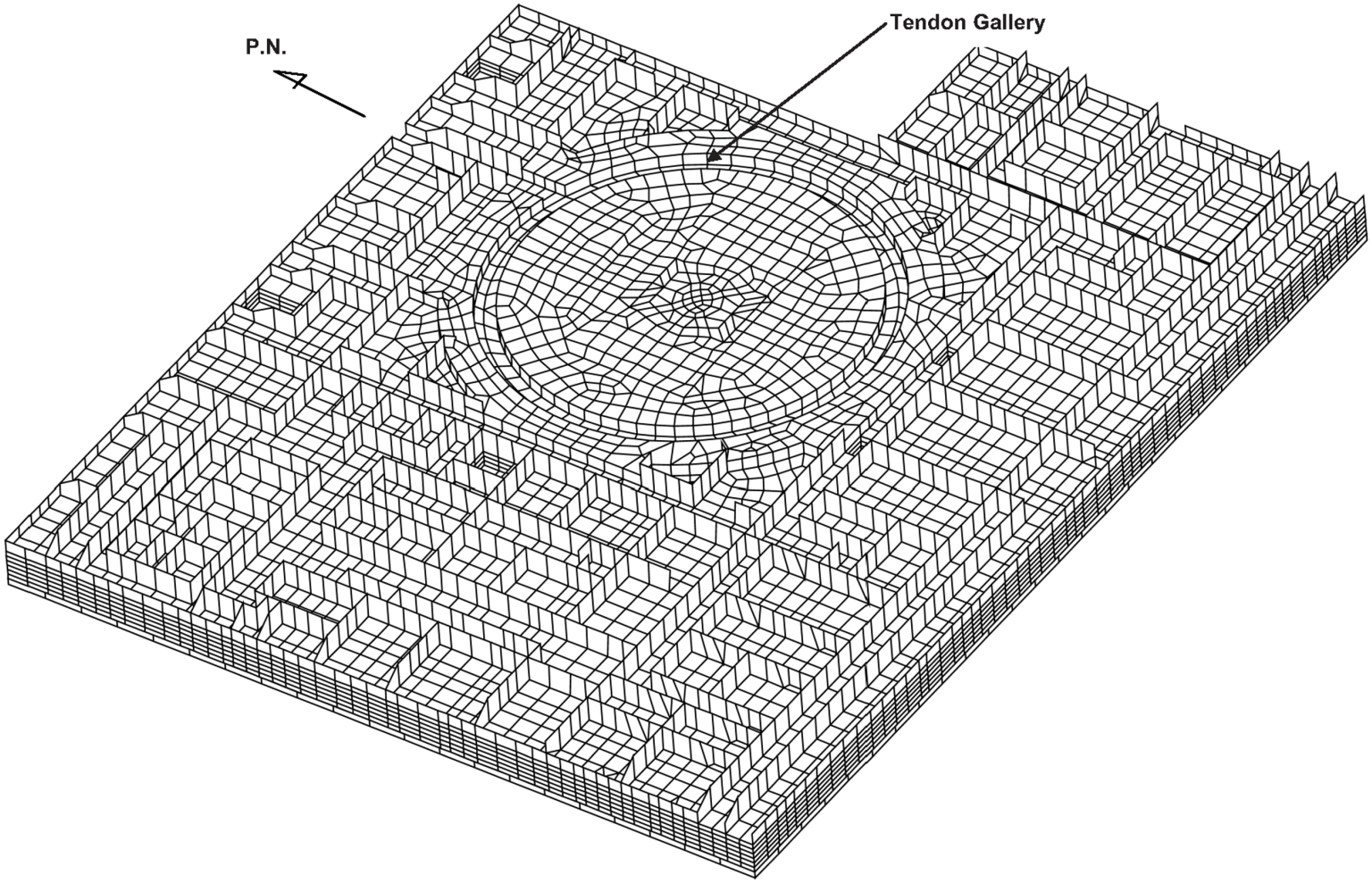

Figure 3.8.5-6 Global Three-Dimensional FE Model of R/B~~, PCCV, and Containment Internal Structure~~ Complex Basemat at Tendon Gallery

MIC-03-03-00057

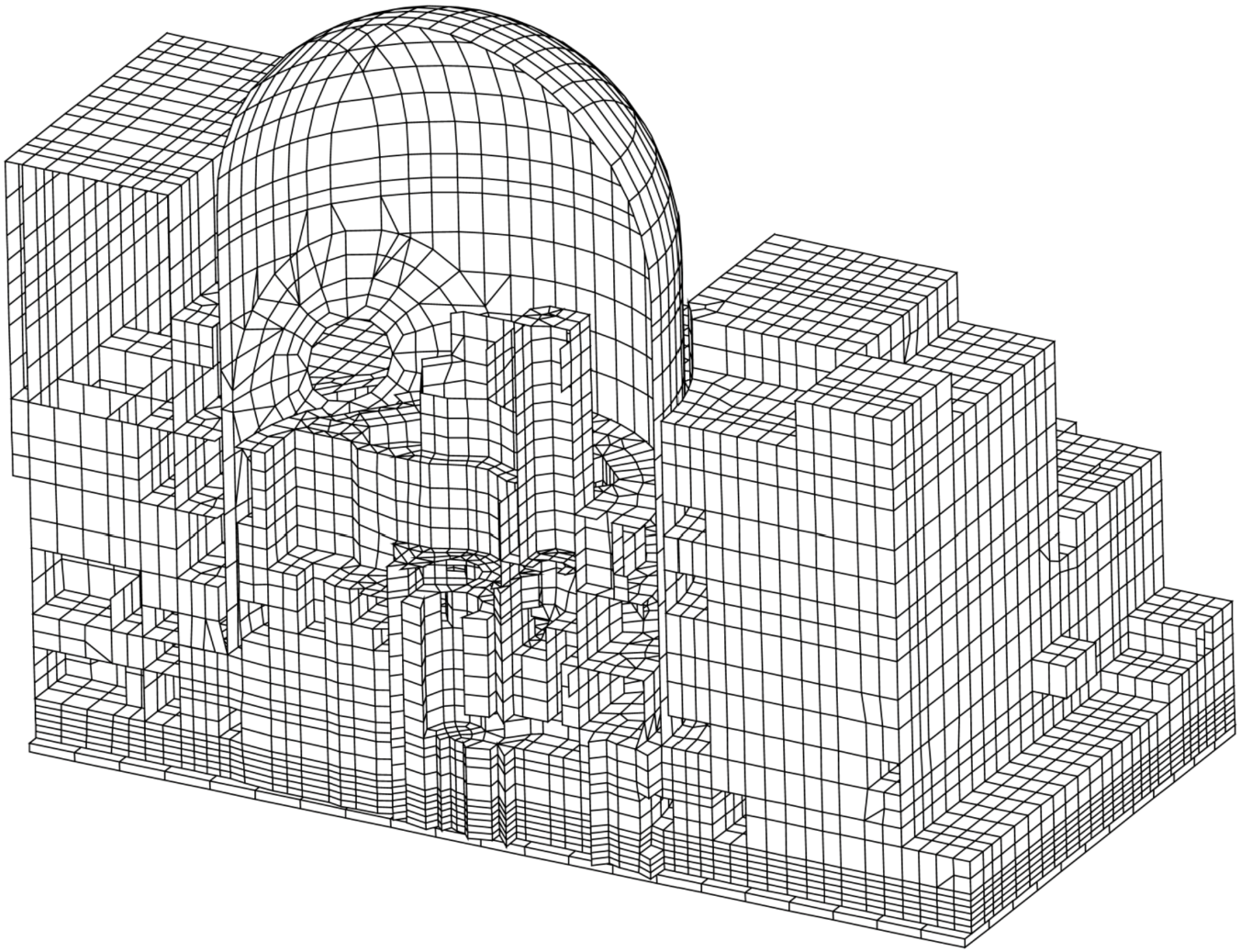

Figure 3.8.5-7 Global Three-Dimensional FE Model of R/B~~, PCCV, and Containment Internal Structure~~ Complex (N-S Section)

MIC-03-03-00057

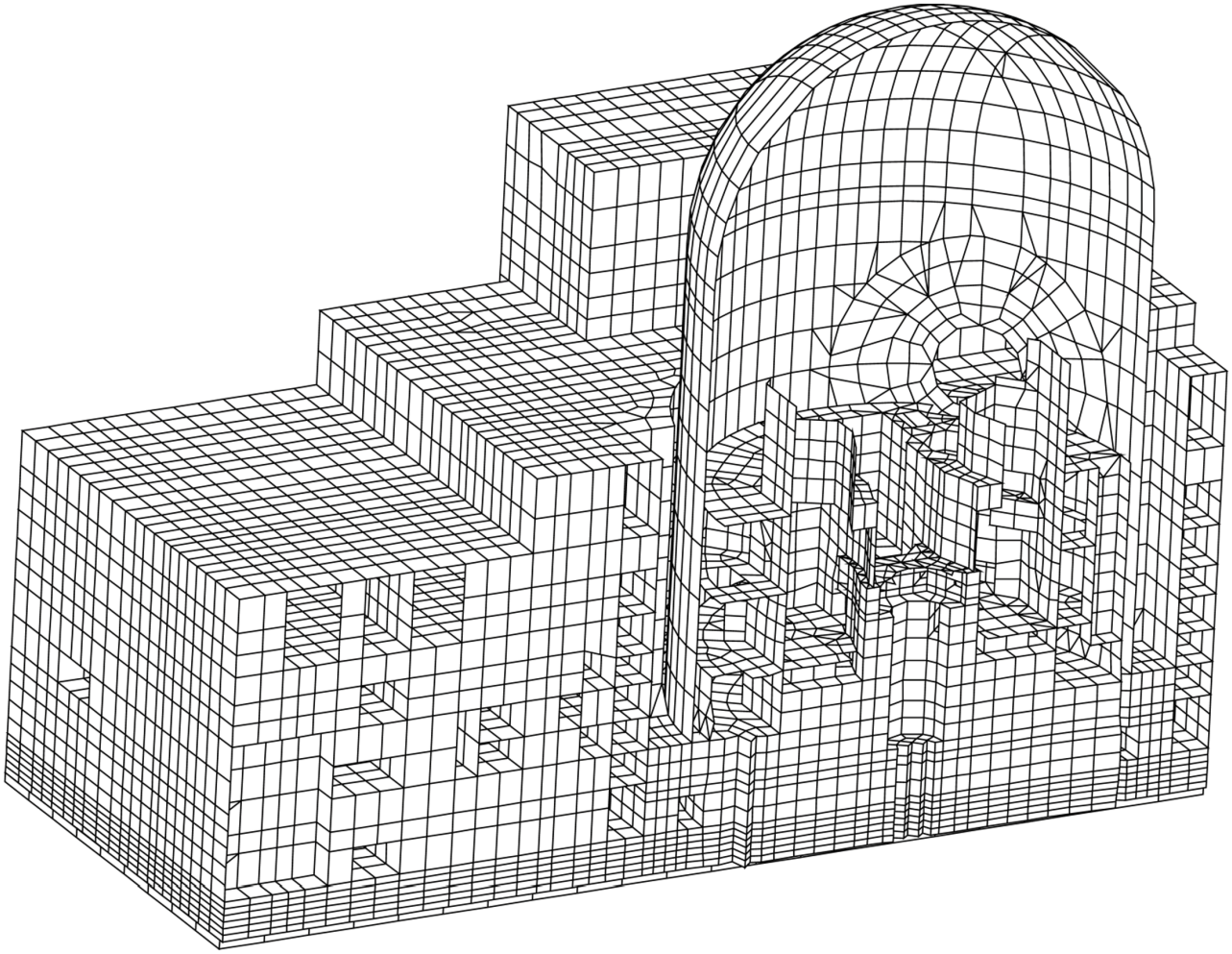

Figure 3.8.5-8 Global Three-Dimensional FE Model of R/B~~, PCCV, and Containment Internal Structure~~ Complex (E-W Section)

MIC-03-03-00057

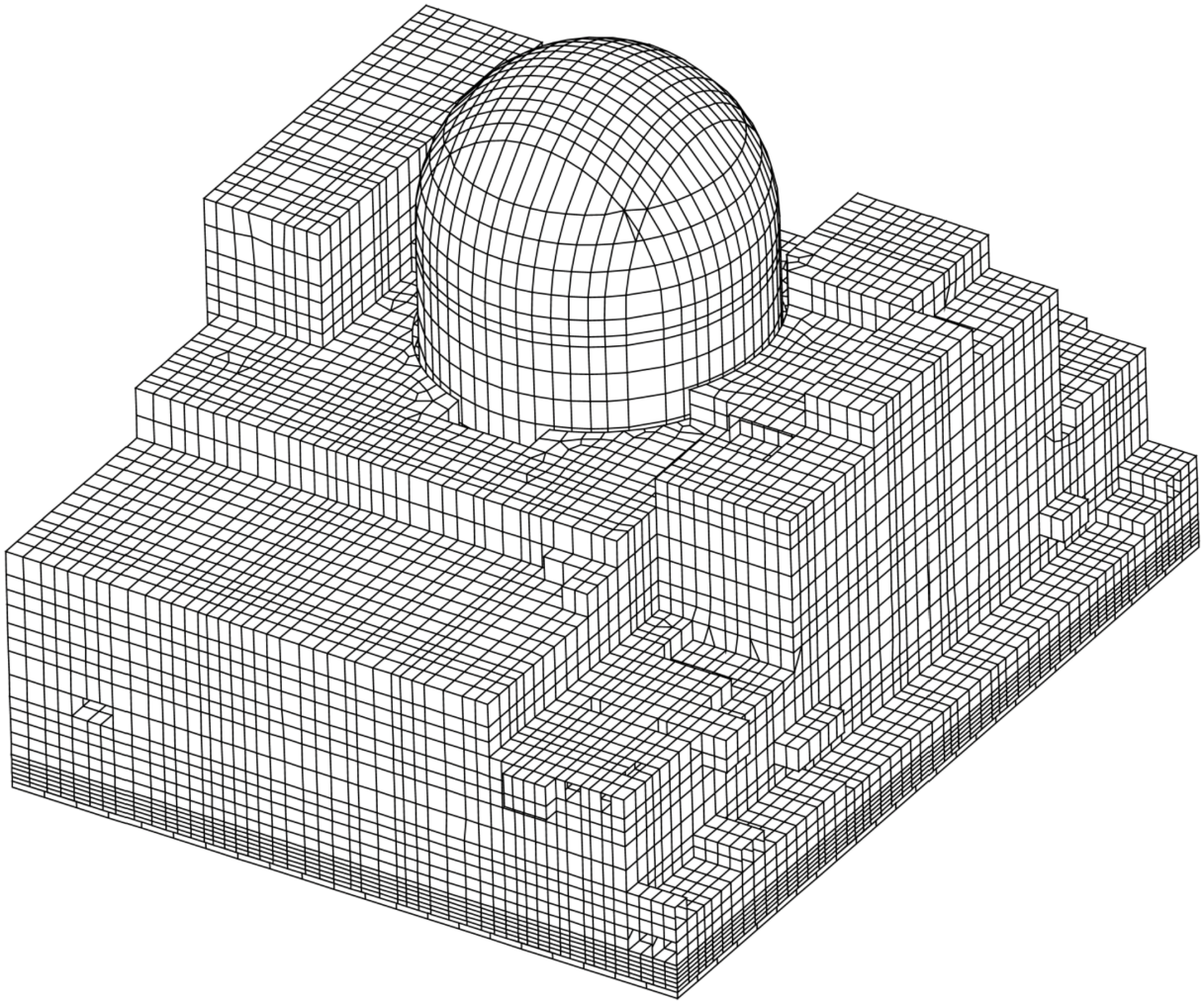

Figure 3.8.5-9 Global Three-Dimensional FE Model of R/B~~, PCCV, and Containment Internal Structure~~ Complex (West Side)

MIC-03-03-00057

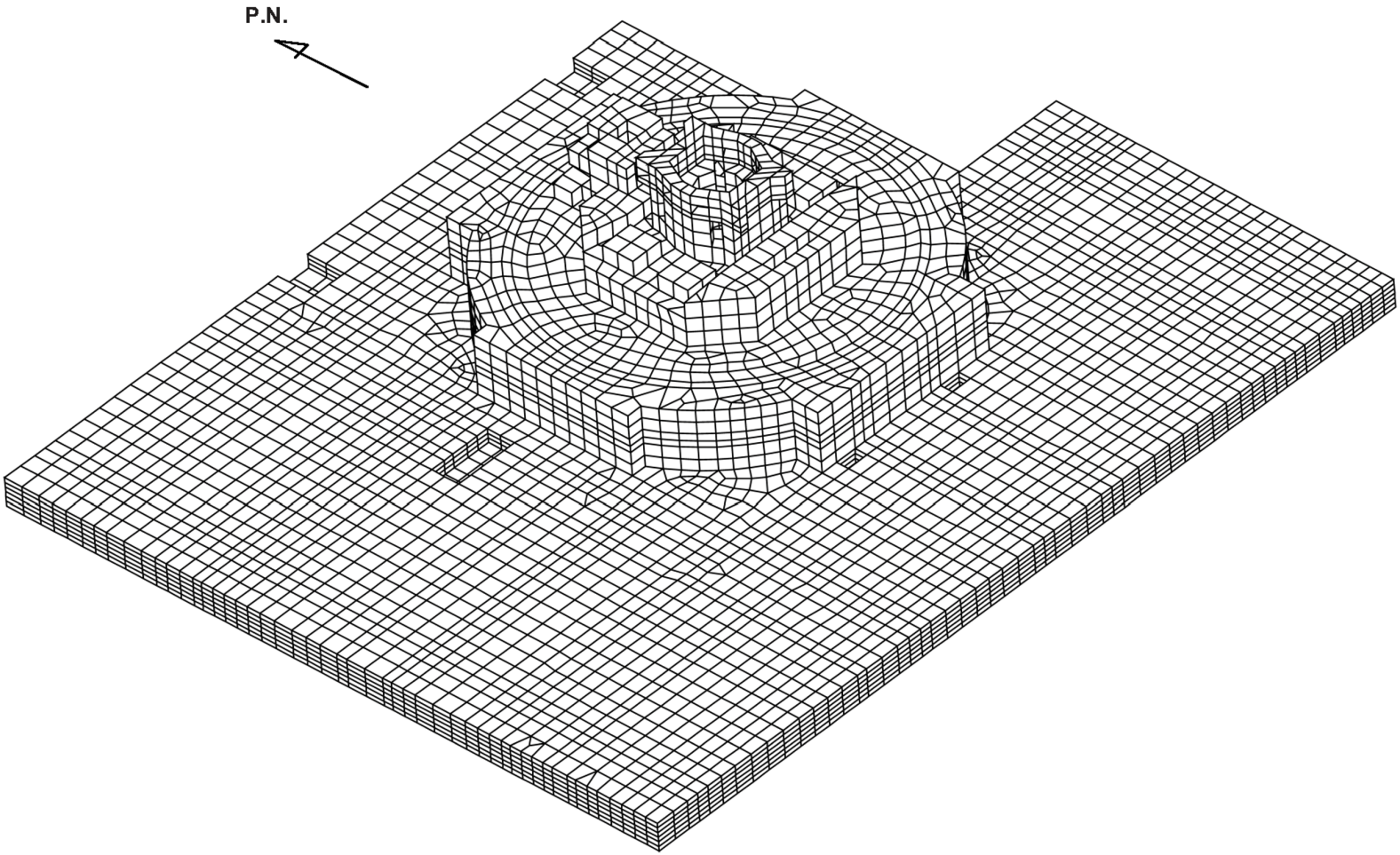

Figure 3.8.5-10 Global Three-Dimensional FE Model of R/B~~, PCCV, and Containment Internal Structure~~ Complex Basemat (Solid Elements)

MIC-03-03-00057

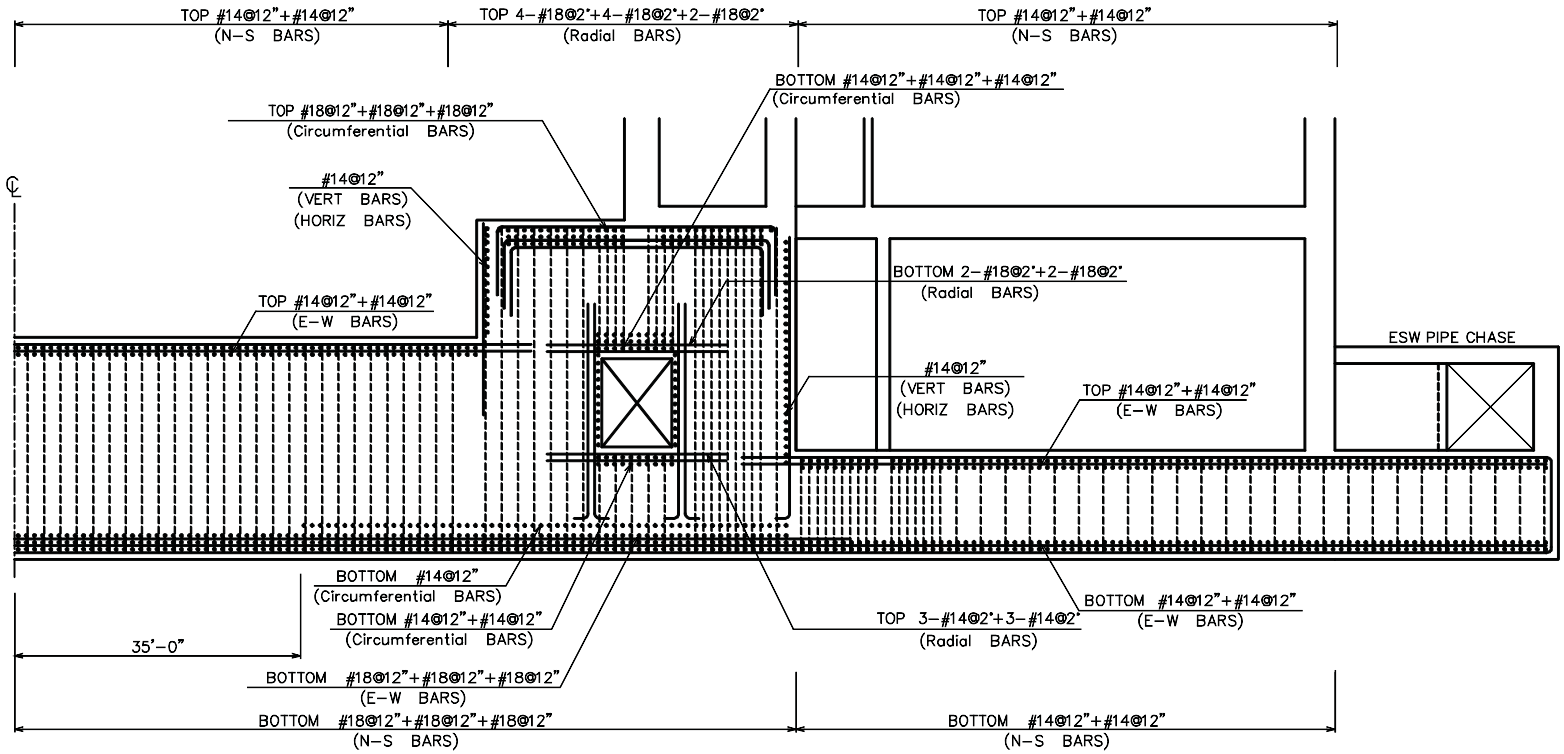

Figure 3.8.5-11 Reinforcing Steel of Basemat: SECTION N-S

MIC-03-03-00057

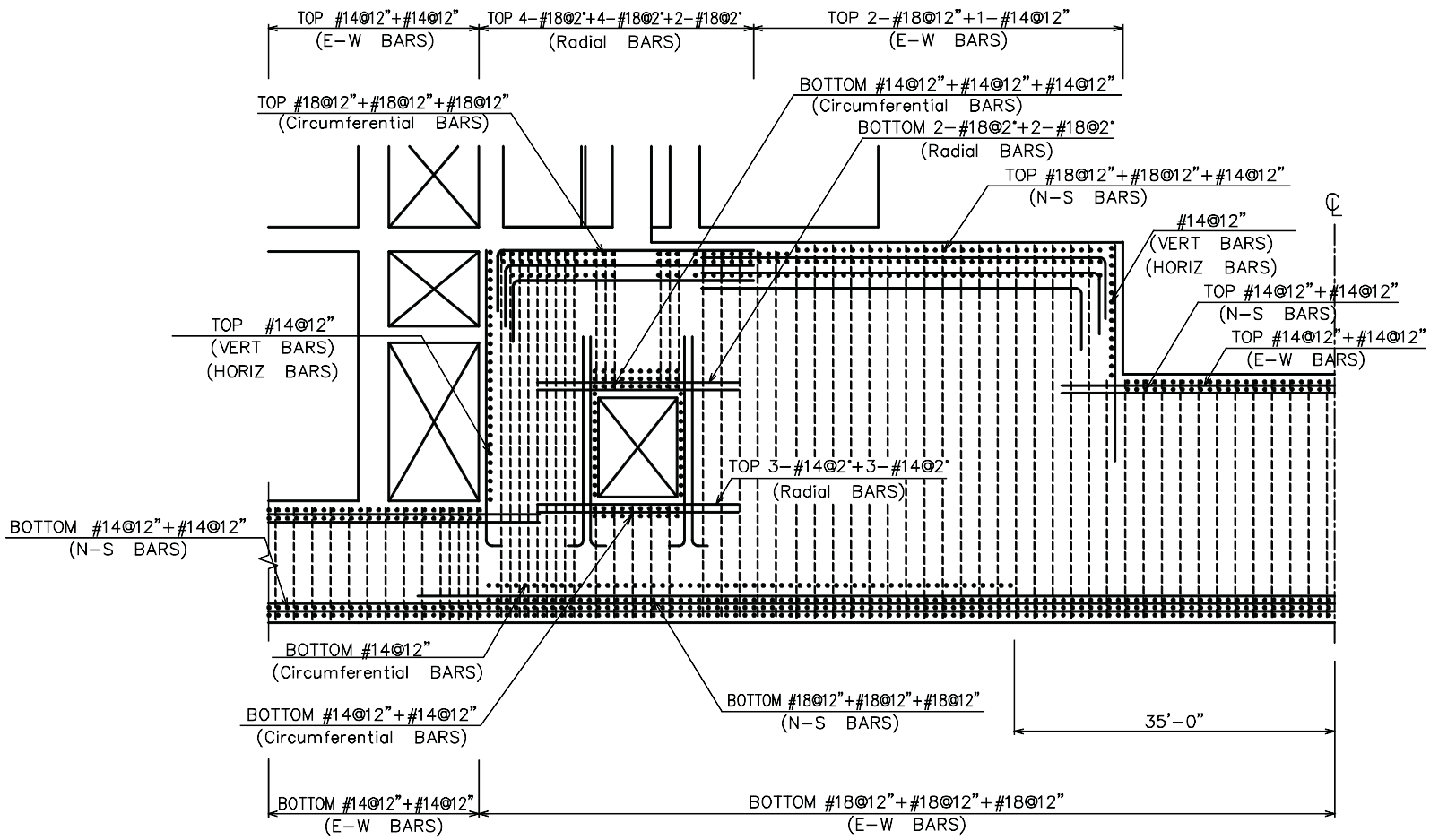

Figure 3.8.5-12 Reinforcing Steel of Basemat: SECTION E-W

MIC-03-03-00057

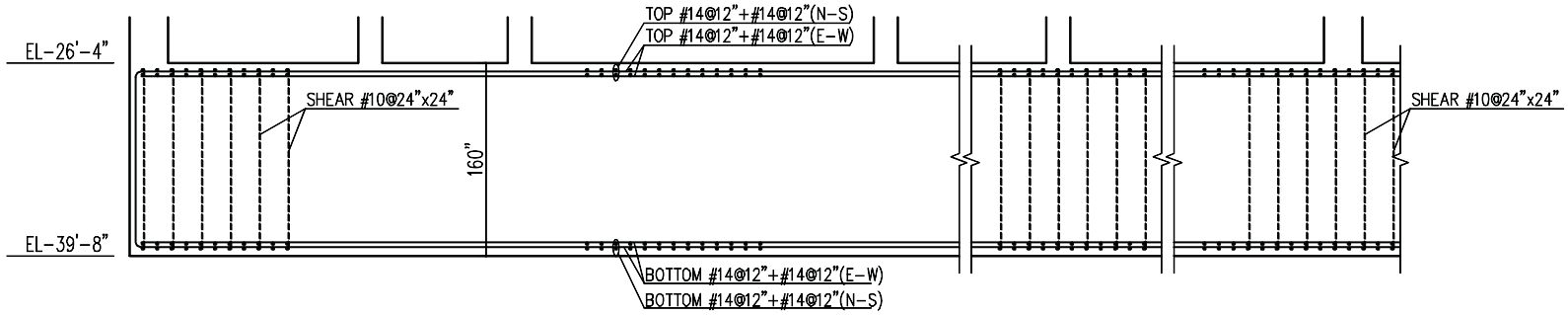

Figure 3.8.5-13 Typical Reinforcement ~~in PS/B~~for R/B Complex around Periphery of Basemats

MIC-03-03-00057

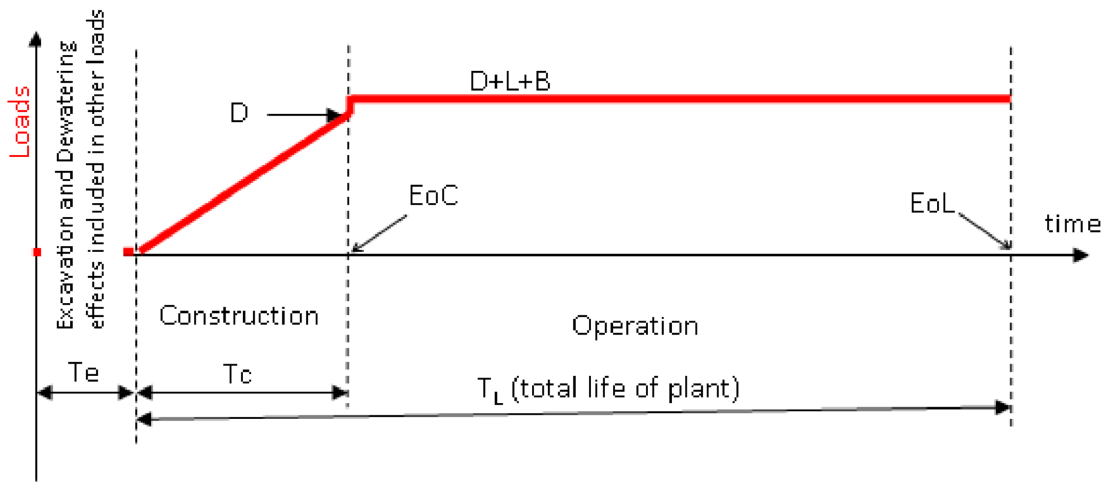

Figure 3.8.5-14 Timeline of Loading for Settlement Analyses

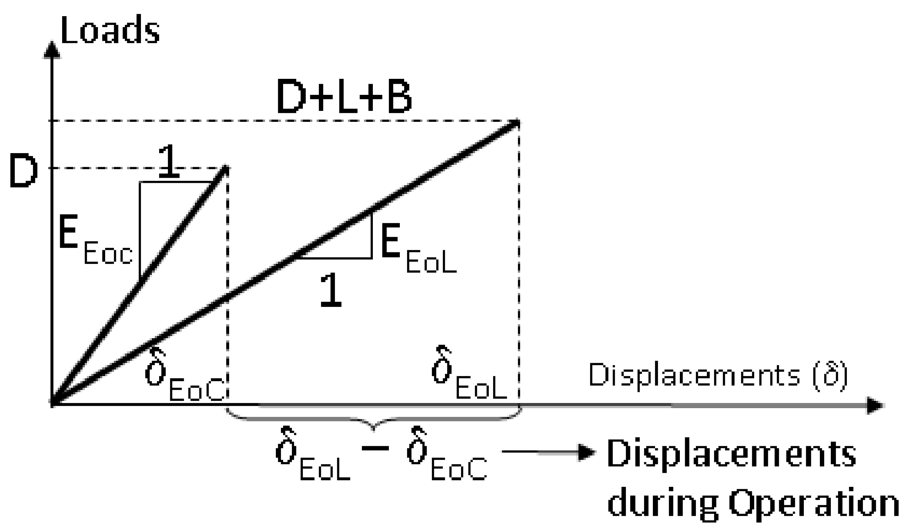

Figure 3.8.5-15 Secant Moduli for Settlement Analyses

Note: See Subsection 3.8.5.4 for definition of terms used in the figure.

3. The material *C* and *m* parameters ($J = C\Delta a^m$) to provide a reasonable lower fit to the JR curves for the base metal and weld material heats shall be established.

4. The required J-T curves, with T based on ASME Code values of modulus of elasticity and flow stress based on Code minimum yield and tensile strengths at 550ºF, are shown in Figure 3B-4. These curves are provided for the range of expected stress factor (SF) as determined in (2) above between 1.~~0~~1 and 1.6. MIC-03-03-00057

5. Based on the actual testing of the base material and the weld materials, a J-T curve based on the lower bound *C* and *m* of the base material and weld material testing is derived. The curve is developed by performing extrapolation to no more than twice the valid J-Integral for the testing, as described in NUREG-1061, Volume 3, Appendix A. Similar to the required J-T curves in Figure 3B-4, the tearing modulus (*T*) shall be based on Code modulus of elasticity and minimum strength properties at 550ºF.

Provided that the J-T curve determined in item (5) above exceeds the required J-T curve of (4), then the material will satisfy the BAC requirements developed in this document.

The required J-resistance curve relationship has been established based on the use of ASME Code modulus of elasticity and minimum strength properties at 550ºF in the fracture mechanics analysis. Review of the curves against actual test data from the literature (e.g. Appendix B of NUREG/CR-6004 [Reference 3B-13] and Pipe Fracture Encyclopedia, Test Data – Volume 3 [Reference 3B-14]) has shown that the J-T curves should be achievable. However, there is limited valid test data for material representative of the main steam line and its thickness.

It has been established that higher stress factors (and the associated lower J-T curves) will produce essentially equivalent results at the lower normal stress part of the BAC curves, and use of higher strength materials produce slightly higher BAC curves at higher stresses. Thus, use of Code minimum properties in establishing the BAC is conservative.

3B.3 LBB Evaluation for the US–APWR

The LBB evaluation method applied is briefly described below in accordance with SRP 3.6.3 (Reference 3B-2).

In the LBB concept, it is necessary to detect a leak at normal operation to prevent the piping system from failure at the postulated maximum load. Therefore, both the stress under normal operation and the maximum load are required for evaluation.

1. Applied load

   a. Load under normal operation

      The evaluation of crack opening area for the estimation of the leak rate is conducted using the stress under normal full power plant operation. The load is produced by internal pressure, dead weight, and thermal expansion.

MIC-03-03-00057

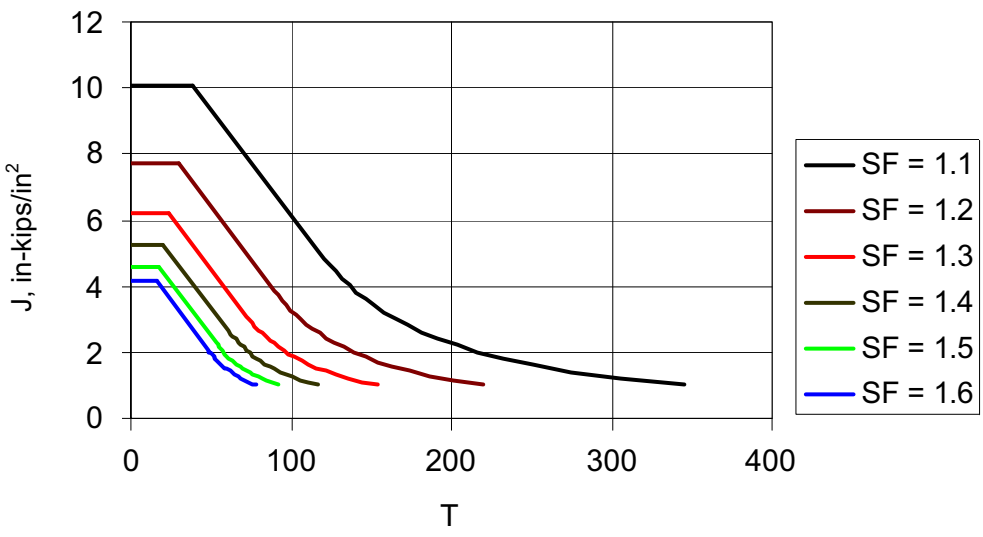

Figure 3B-4 Combination Scheme of Tension and Bending