NUREG/CR-3226
SAND82-2450

Station Blackout Accident Analyses (Part of NRC Task Action Plan A-44)

Prepared by A. M. Kolaczkowski, A. C. Payne, Jr.

Sandia National Laboratories

Prepared for
U.S. Nuclear Regulatory
Commission

NOTICE

This report was prepared as an account of work sponsored by an agency of the United States Government. Neither the United States Government nor any agency thereof, or any of their employees, makes any warranty, expressed or implied, or assumes any legal liability of responsibility for any third party's use, or the results of such use, of any information, apparatus, product or process disclosed in this report, or represents that its use by such third party would not infringe privately owned rights.

Availability of Reference Materials Cited in NRC Publications

Most documents cited in NRC publications will be available from one of the following sources:

1. The NRC Public Document Room, 1717 H Street, N.W.
   Washington, DC 20555
2. The NRC/GPO Sales Program, U.S. Nuclear Regulatory Commission,
   Washington, DC 20555
3. The National Technical Information Service, Springfield, VA 22161

Although the listing that follows represents the majority of documents cited in NRC publications, it is not intended to be exhaustive.

Referenced documents available for inspection and copying for a fee from the NRC Public Document Room include NRC correspondence and internal NRC memoranda; NRC Office of Inspection and Enforcement bulletins, circulars, information notices, inspection and investigation notices; Licensee Event Reports; vendor reports and correspondence; Commission papers; and applicant and licensee documents and correspondence.

The following documents in the NUREG series are available for purchase from the NRC/GPO Sales Program: formal NRC staff and contractor reports, NRC-sponsored conference proceedings, and NRC booklets and brochures. Also available are Regulatory Guides, NRC regulations in the *Code of Federal Regulations,* and *Nuclear Regulatory Commission Issuances.*

Documents available from the National Technical Information Service include NUREG series reports and technical reports prepared by other federal agencies and reports prepared by the Atomic Energy Commission, forerunner agency to the Nuclear Regulatory Commission.

Documents available from public and special technical libraries include all open literature items, such as books, journal and periodical articles, and transactions. *Federal Register* notices, federal and state legislation, and congressional reports can usually be obtained from these libraries.

Documents such as theses, dissertations, foreign reports and translations, and non-NRC conference proceedings are available for purchase from the organization sponsoring the publication cited.

Single copies of NRC draft reports are available free upon written request to the Division of Technical Information and Document Control, U.S. Nuclear Regulatory Commission, Washington, DC 20555.

Copies of industry codes and standards used in a substantive manner in the NRC regulatory process are maintained at the NRC Library, 7920 Norfolk Avenue, Bethesda, Maryland, and are available there for reference use by the public. Codes and standards are usually copyrighted and may be purchased from the originating organization or, if they are American National Standards, from the American National Standards Institute, 1430 Broadway, New York, NY 10018.

GPO Printed copy price: $8.00

NUREG/CR-3226
SAND82-2450
AI, 1S, 9X

Station Blackout Accident Analyses (Part of NRC Task Action Plan A-44)

Manuscript Completed: April 1983
Date Published: May 1983

Prepared by
A. M. Kolaczkowski, A. C. Payne, Jr.

Sandia National Laboratory
Albuquerque, NM 87185

Prepared for
Division of Safety Technology
Office of Nuclear Reactor Regulation and
Division of Risk Analysis
Office of Nuclear Regulatory Research
U.S. Nuclear Regulatory Commission
Washington, D.C. 20555
NRC FIN A1302

Abstract

This report presents the results of the accident sequence analysis portion of Task Action Plan A-44 "Station Blackout. Along with a companion report by ORNL[1] on onsite AC power systems, a technical basis for the resolution of Task A-44 is provided.

For this report, an extensive review of decay heat removal systems was conducted and generic fault tree models of the systems analyzed were constructed. These generic models were selected on the basis of (1) the number of plants having such a system, and (2) the ease of modifying the model to allow sensitivity studies to cover all significant variations of system design.

Event trees using station blackout as the initiating event were constructed to define the possible accident sequences. These sequences were analyzed using probabilistic analysis techniques to obtain "minimal cut sets" (i.e., combinations of failure modes which lead to core melt).

For the dominant sequences, sensitivity analyses are done to show the effects on both individual sequence and total core melt frequency of changing various plant parameters. Many changes were found to be effective in reducing total core melt frequency. A more detailed value impact calculation will be done as part of the development of the NRC regulatory guide on this issue.

TABLE OF CONTENTS

Page

1.0 Executive Summary..... 1

2.0 Introduction..... 4

2.1 "Station Blackout" - An Unresolved Safety Issue.... 4
2.2 Program Scope..... 5
2.3 Technical Approach..... 6
2.4 Unique Aspects..... 8

3.0 Basic Plant Configurations..... 10

3.1 Electrical Power Systems..... 10
3.2 PWR Shutdown Cooling Systems..... 11
3.3 BWR Shutdown Cooling Systems..... 12
3.4 Instrumentation..... 14

4.0 Plant Modeling and Quantification Process..... 15

4.1 Event Trees..... 15
4.2 Fault Trees..... 20
4.3 Accident Sequence Analysis..... 20

5.0 Results..... 22

5.1 Generic "Base" Plant Accident Sequence Results..... 22

5.1.1 Probabilities and Uncertainties..... 22
5.1.2 Dominant Accident Sequence Descriptions and Cutset Information..... 33

5.1.2.1 PWR Case Configuration (B&W/W/CE).. 33
5.1.2.2 BWR Case Configurations 1A and 1B.. 39
5.1.2.3 BWR Case Configuration 2..... 45
5.1.2.4 BWR Base Configuration 3..... 50

5.2 Containment Response Considerations..... 53

5.2.1 Introduction..... 53
5.2.2 Discussion of Particular Containments..... 54
5.2.3 General Conclusions..... 57

6.0 Observations, Insights, and Sensitivities..... 60

6.1 General Observations and Insights..... 60
6.2 Specific Sequence Observations, Insights, & Sensitivities..... 63

TABLE OF CONTENTS (Cont.)

		Page
Appendix A	Event Trees	74
Appendix B	Shutdown Cooling Systems' Configurations and Review Process Description	93
Appendix C	Fault Trees	166
Appendix D	"Base" Plant Configuration Descriptions	213
Appendix E	Data	225
Appendix F	Comparisons With Proposed Safety Goals and Past PRAs	239
Appendix G	Discussion on RCS Pump Seal Failure During Station Blackout	246
Appendix H	Human Error Rates	249
Appendix I	List of Basic Assumptions Used in This Analysis	253
Appendix J	External Events	258
Glossary		261
References		263

FIGURES

Figure		Page
1	Generic PWR Event Tree for Station Blackout.....	16
2	Generic BWR Event Tree for Station Blackout (BWR2-BWR3).....	17
3	Generic BWR Event Tree for Station Blackout (BWR3-BWR6).....	18
4	Typical Fault Tree Structure.....	21
5	PWR (B&W) Base Configuration Station Blackout - Core Damage Sequence Probabilities.....	24
6	PWR (W/CE) Base Configuration Station Blackout - Core Damage Sequence Probabilities.....	26
7	BWR Case Configurations 1A & 1B Dominant Station Blackout - Core Damage Sequence Probabilities.....	28
8	BWR Base Configuration 2 Dominant Station Blackout - Core Damage Sequence Probabilities..	30
9	BWR Base Configuration 3 Dominant Station Blackout - Core Damage Sequence Probabilities..	32
A-1	Generic PWR Event Tree for Station Blackout.....	77
A-2	Generic BWR Event Tree for Station Blackout (BWR2-BWR3).....	78
A-3	Generic BWR Event Tree for Station Blackout (BWR3-BWR6).....	79
B-1	System Information & Interactions Covered in Review of AC-Independent Systems.....	101
B-2	System Information & Interactions Covered in Review of AC-Dependent Systems.....	102
B-3	MFWS Major Fault Modes.....	105
B-4	Simplified Diagram of Typical Auxiliary Feedwater System.....	106
B-5	AFWS Major Fault Modes.....	111
B-6	Sources of Station Blackout Caused RCS Integrity Loss (PWR).....	112
B-7	Examples of RCS Isolation Configurations.....	114
B-8	RCS Integrity Major Fault Modes.....	116
B-9	Simplified Diagram of Typical High Pressure Injection System.....	117
B-10	Simplified Diagram of Typical Low Pressure Injection System.....	119
B-11	Simplified Diagram of Typical RCS Relief Valve Arrangement.....	121
B-12	Simplified Diagram of Alternate Configuration for HPIS.....	122
B-13A	Fault Tree for High Pressure Makeup.....	123
B-13B	HPIS Major Fault Modes.....	124
B-13C	PORV Major Fault Modes.....	125
B-14	PCS Major Fault Modes.....	129
B-15	Sources of Station Blackout Caused RCS Integrity Loss (BWR).....	130
B-16	RCS Integrity Major Fault Modes.....	133

FIGURES (Cont.)

Figure		Page
B-17	Simplified Diagram of Manual Feedwater Coolant Injection System	135
B-18	Simplified Diagram of Auto Feedwater Coolant Injection System	136
B-19A	Auto FWCI Major Fault Modes	137
B-19B	Manual FWCI Major Fault Modes	138
B-20	Simplified Diagram of Typical Isolation Condenser Design	140
B-21	Isolation Condenser Major Fault Modes	142
B-22	Simplified Diagram of Typical HPCI/RCIC Systems	143
B-23	Simplified Diagram of HPCS	144
B-24	HPCI/RCIC Major Fault Modes	147
B-25	HPCS Major Fault Modes	148
B-26	Simplified Diagram of Typical APRS/ADS Valve Arrangement	150
B-27	APRS/ADS Major Fault Modes	152
B-28	Simplified Diagram of Typical LPCS (Early Designs)	153
B-29	Simplified Diagram of Typical LPCS (Later Designs)	154
B-30	Simplified Diagram of Typical LPCI/LPCRS	155
B-31	Simplified Diagram of Typical LPCS/LPCI/LPCRS for BWRs 5&6	157
B-32	LPCS/LPCI Major Fault Modes	158
B-33	Simplified Diagram of Typical Containment Spray/Cooling System	160
B-34	Simplified Diagram of Typical Shutdown Cooling System	161
B-35	Long-Term Heat Removal Major Fault Modes	163
C-1	PWR: High Pressure Makeup Fault Tree	168
C-2	PWR: RCS Integrity Loss Fault Tree	182
C-3	PWR: Auxiliary Feedwater Fault Tree	188
C-4	BWR: RCS Integrity Loss Fault Tree	195
C-5	BWR: Isolation Condenser Fault Tree	199
C-6	BWR: HPCI/RCIC Fault Tree	205
C-7	BWR: APRS/ADS Fault Tree	209
C-8	BWR: Auto FWCI Fault Tree	210
C-9	BWR: Manual FWCI Fault Tree	212

TABLES

Table		Page
1	PWR Base Configuration (B&W) Station Blackout - Core Damage Sequence Probabilities	23
2	PWR Base Configuration (W/CE) Station Blackout - Core Damage Sequence Probabilities	25
3	BWR Base Configurations 1A & 1B Station Blackout - Core Damage Sequence Probabilities	27
4	BWR Base Configuration 2 Station Blackout - Core Damage Sequence Probabilities	29
5	BWR Base Configuration 3 Station Blackout - Core Damage Sequence Probabilities	31
6	Containment Characteristics	53
7	Containment Failure Insights	59
8	Summary of Major Factors Affecting Dominant Station Blackout Accident Sequences	64
9	PWR Sensitivities	66
10	BWRs With Isolation Condenser Sensitivities	70
11	BWRs With HPCI-RCIC Sensitivities	72
A-1	Station Blackout Effects	80
A-2	Summary of Event Tree Heading Descriptions	81
B-1	Summary of Information Sources	97
B-2	Systems Included in Review Scope (PWRs)	98
B-3	Systems Included in Review Scope (BWR 2/3 Designs)	99
B-4	Systems Included in Review Scope (BWR 3/4/5/6 Designs)	100
E-1	Basic Component Data	228
E-2	PWR Approximate System Hardware Unavailability on Demand	230
E-3	PWR Approximate System T&M Unavailability on Demand	231
E-4	BWR Approximate System Hardware Unavailability on Demand	232
E-5	BWR Approximate System T&M Unavailability on Demand	233
F-1	Summary of Past PRA Information	241
F-2	Comparison of Sequence Estimates Between PRAs and This Study	244
F-3	Comparison of Core Damage Probability Per Year Due to Station Blackout for "Base" Plant Configuration with Proposed Safety Goals	245

Acknowledgements

The authors acknowledge the contribution of Patrick W. Baranowsky of the Nuclear Regulatory Commission for his direction and guidance in developing this report. Emily Preston is also acknowledged for her invaluable assistance in producing this report.

1.0 EXECUTIVE SUMMARY

The complete loss of AC electrical power to the essential and nonessential switchgear buses in a nuclear power plant is referred to as a "Station Blackout." Because many safety systems required for reactor core decay heat removal are dependent on AC power, and since a number of precursor events to station blackout have occurred, the importance of this issue was raised to that of an "unresolved" safety issue.

This work coupled with a companion report by Oak Ridge National Laboratory (ORNL) [1] provides a technical basis for resolving the station blackout issue. This report focuses on the accident sequence analysis portion of the program by (1) determining core damage probabilities, (2) providing insights and sensitivity reviews for lowering the core melt frequency of accidents, and (3) providing perspectives on the risk from such an event.

The scope of this program covers virtually all existing or near-term operating plants with just a few exceptions due to their unique design features. This was accomplished by performing probabilistic safety analyses on a few generic "base" plant configurations and then providing additional information to assess plant design and/or operational features different from the "base" configurations.

Those plant features found to be important overall, as a result of our analyses, are summarized below:

- The effectiveness of actions to restore offsite power once it is lost,
- The degree of redundancy and reliability of the standby AC power system,
- The standby reliability of decay heat removal systems following loss of AC power,
- DC power reliability and battery capacity including the availability of instrumentation and control for decay heat removal without AC power,
- Common service water dependencies between the emergency AC power source and the decay heat removal systems,
- The magnitude of reactor coolant pump seal leakage and the likelihood of a stuck open relief valve during a station blackout,
- Containment size and design pressure,
- Operator training and available procedures,

- External events which cause plant responses similar to an actual station blackout (but may be better analyzed independent of the station blackout issue).

Since the generic "base" plant configurations have differing susceptibilities, a summary of the important features for each configuration is given below:

(1) Pressurized Water Reactors (PWRs): Initial Auxiliary Feedwater System (AFW) unavailability, battery depletion effects, possible AC dependency for Reactor Coolant System (RCS) isolation, common service water dependencies in AC/makeup systems and the likelihood of a large RCS pump seal leak.

(2) Boiling Water Reactors (BWRs) with isolation condenser(s): loss of RCS integrity due to stuck-open relief valve or large RCS pump seal leak, isolation condenser(s) unavailability, and common service water dependencies in AC/makeup systems.

(3) BWRs with High Pressure Coolant Injection - Reactor Core Isolation Cooling (HPCI-RCIC): ability to operate HPCI-RCIC under a prolonged blackout.

(4) BWRs with High Pressure Core Spray - Reactor Core Isolation Cooling (HPCS-RCIC): initial HPCS-RCIC unavailability and ability to operate RCIC under a prolonged blackout.

In addition to the station blackout accident sequences initiated by system failures, current estimates [9,10,63] of the frequency of major seismic, fire, and wind events which could cause blackout-related core damage are in the range of 1E-4 to less than 1E-6 per year. The likelihood depends on plant features such as the plant's susceptibility to seismic activity and the effects on the switchyard and control systems, susceptibility to fire and the degree of cable separation, and susceptibility to wind or storm events and the effect on offsite power, the switchyard, and on other plant equipment. While not necessarily causing a station blackout, the plant could lose the ability to supply power from the onsite electrical buses to the AC/DC loads. If this should happen, plant responses similar to an actual station blackout event would occur.

These external events may limit the degree to which station blackout core melt frequencies can be lowered by improving the features summarized in the preceding paragraphs.

In view of these results, one can see that the important factors that determine a plant's susceptability to a station blackout can be plant unique. This report provides the analysis which will enable one to compare specific existing plant features against the

important factors identified in this report and to decide upon the importance of station blackout at each plant. This comparison and the sensitivity analysis will provide part of the input for future Nuclear Regulatory Commission (NRC) decisions on the Station Blackout issue.

2.0 INTRODUCTION

2.1 "STATION BLACKOUT"--AN UNRESOLVED SAFETY ISSUE [2]

The complete loss of AC electrical power to the essential and nonessential switchgear buses in a nuclear power plant is referred to as a "Station Blackout." Because many safety systems required for reactor core decay heat removal are dependent on AC power, the consequences of a station blackout could be a severe core damage accident. Therefore, the technical issue is (1) whether the probability of a station blackout is too high, and (2) what the consequences of a station blackout are; that is, whether severe core damage can result.

The issue of station blackout arose because of the historical experience regarding the availability and reliability of AC power supplies. A number of operating plants have experienced a total loss of offsite electrical power. In each instance, onsite emergency AC power supplies were available to provide power to vital safety equipment. However, in some instances, one of the redundant emergency power supplies has been unavailable. In addition, there have been numerous reports of emergency diesel generators failing to start and run at operating plants.

Results of the Reactor Safety Study [3] show that for one of the two plants evaluated, a station blackout accident could be an important contributor to the total risk from nuclear power plant accidents. Although this total risk was found to be small, the relative importance of station blackout accidents was established. Recognition of this importance, coupled with the historical diesel generator failure experience and the observed unreliability and unavailability of some offsite AC power sources, raised the concern regarding station blackout to an unresolved safety issue.

In mid-1979, the responsibility for carrying out a program to resolve this safety issue was given to the Office of Nuclear Regulatory Research. Task Action Plan A-44 was subsequently established as the program plan for resolving the station blackout issue. Two broad parts of the program plan are: (1) AC power analysis, and (2) accident sequence analysis. The first part was assigned to the Oak Ridge National Laboratory (ORNL); the second part was assigned to Sandia National Laboratories (SNL). This report presents the results of the accident sequence analysis portion of the program and utilizes much of ORNL's work.

Hopefully, the results of both sets of analyses, along with other inputs to the NRC, will provide a technical basis for any future regulatory changes and ultimate resolution of the safety issue.

2.2 PROGRAM SCOPE

Because station blackout was declared an unresolved safety issue of generic proportions, it is mandatory that this technical program be designed to cover as many of the operating and near-term operating nuclear power plants as possible; the program should also give recommendations to be considered in future designs. In light of this, it became apparent early in our study that three items could significantly affect the core damage probability and/or the potential risks from a station blackout event:

Item 1. The electrical power system configuration including such factors as the number and stability of offsite power sources and the design and capability of the onsite AC and DC power systems.

Item 2. The shutdown cooling system design with emphasis on its vulnerabilities and therefore its capability and and reliability under prolonged station blackout conditions; and

Item 3. The containment design with particular attention to containment systems' operability and the ability to withstand temperature and pressure buildup during a prolonged loss of AC power.

Item 1 - was studied in great detail by ORNL. Personnel there gathered and analyzed the most up-to-date and complete information possible to determine the factors which most affect the probability of station blackout and the chances for recovery of power once it is lost. The scope and magnitude of this work is documented in the companion report by ORNL.[1]

Items 2 and 3 - Within the scope of Sandia's work, Item 2 in particular and to some extent Item 3 can have a significant impact on the importance of station blackout. Such factors as the number and capabilities of AC-independent shutdown cooling systems, their reliability, the plant core damage phenomena and timing, the plant's degree of dependence on AC power for indication and control, significant plant operational differences, and containment design can clearly affect station blackout's importance as a dominant accident sequence.

Unfortunately, standardization of plant designs has yet to become a reality in the nuclear industry. To cover all the possible significant differences in design, a major plant and system information gathering task was undertaken. For this report, major differences in plant design and operation were examined and cataloged for study. When possible, enveloping studies have been performed to cover design differences by one analysis.

The result is a program in which the technical work embodies the design and operational aspects (those aspects which are important to the station blackout issue) of nearly all the PWRs and BWRs in existence to date and of those plants to come on line in the near term. This includes most BWR-2, 3, 4, 5, and 6 vintage designs and virtually all PWR designs from the three major PWR vendors. Only the earliest designs of both plant types are not necessarily covered by these analyses. These early designs include the BWR-1 (Dresden-1, Humboldt Bay, Big Rock Point) and possibly some early PWRs (Indian Point-1, Yankee Rowe). In addition, the small La Crosse plant and Ft. St. Vrain (a high temperature gas-cooled reactor) are not covered. These plants have system and/or accident phenomena timing features which are unique. These unique features would involve plant specific studies to determine the importance of station blackout at these sites.

With such a broad scope, it is no surprise that a general statement on the likelihood and risk of station blackout cannot be made. Different classes of plants have different vulnerabilities to a total loss of AC power which results in different observations for each major type of plant configuration.

2.3 TECHNICAL APPROACH

The approach followed in this study involved the use of PRA techniques using event tree and fault tree modeling to determine the relative importance of station blackout as compared with other commonly identified dominant accident sequences and as examined against safety goals being proposed for the nuclear industry. [See Appendix F.] The study was made to determine the potential for core damage and the associated risks due to station blackout for most of the operating and near-term operating nuclear power plants. The factors most affecting the core damage and risk probabilities were to be identified and observations were to be made regarding lessening the risks from station blackout.

To meet these program goals the most likely accident scenarios, or dominant accident sequences, involving station blackout were identified for the various current or soon-to-be plant configurations. Those key design and/or operational features which cause these accident sequences to be dominant were then identified. Based on these features, observations were made regarding ways these dominant accident sequences could become less significant in terms of risk so as to provide the technical basis for resolving this difficult safety issue.

Many design and operational features can affect the relative importance of station blackout accident sequences. From among all these possible variations, "base" designs were identified on the basis of their uniqueness of design, number of plants with this design (or a similar design), and their relative vulnerability to station blackout. Then using sensitivity and uncertainty analyses, other design variations similar to a "base" configuration were analyzed as necessary to assure that any observations applied to the "base" case were also applicable to the other design variations. If the features of a certain design variation were found to be unimportant as a result of the analysis of the "base" case, no further analysis was conducted on the design variation.

The analyses performed were probabilistic safety analyses of the "base" plant configurations using event tree and fault tree modeling to depict the plant response to a station blackout. Realistic configurations and system and phenomenological dependencies were incorporated into the analyses using the most up-to-date information available. In this regard, plant, system, and operational information was gathered from a host of information sources with emphasis on incorporating the many plant changes which have been made and are being made since the Three Mile Island-Unit 2 (TMI-2) accident in early 1979. As a result, although the Final Safety Analysis Report (FSAR) and past-Probabilistic Risk Assessment (RSS, RSSMAP, IREP, industry studies) information was used, all this was tempered and changed accordingly in the event tree and fault tree models to reflect requirements of the TMI action plan, industry responses to items of the plan, plant visits by Sandia personnel, new plant station blackout procedures, and other miscellaneous NRC and industry reports and letters reflecting current changes in system design and plant operational practices. Furthermore, the latest results involving accident sequence timing were used as delineated by the Severe Accident Sequence Analysis (SASA) program also sponsored by NRC [31, 34].

The event trees assume station blackout as the "given" initiating event and explicitly consider how plant vulnerabilities to station blackout change with respect to time by incorporating three time periods within the event tree structure. In this way, the effects of a prolonged AC loss can be uniquely identified, studied, and displayed using the event tree format.

The fault trees, which depict the more detailed shutdown cooling system faults and vulnerabilities to station blackout, are so constructed that AC, DC, support system, and other phenomenological dependencies are separated out and explicitly shown on the trees while all other system faults are combined into hardware or test and maintenance faults of the system. In addition, key human actions affecting system operation and performance are modeled in the fault trees including many possible system recovery actions. The fault trees are constructed "given" station blackout has occurred. Finally, all variations of a given system design are displayed on the fault trees with the ability to select any particular design variation to be analyzed.

By combining the possible sequences leading to station blackout (supplied by ORNL) with the sequences derived from the event tree and fault tree models of this study, the entire spectrum of modeled station blackout sequences are identified and then quantified to derive the dominant accident sequences. Lastly, a review of other work done on (1) the timing of containment failure and (2) containment failure modes for various station blackout accident sequences and containment designs has been performed. [3-10,32,34,63-65] Subsequent investigations (not part of this study) can be performed using this information to estimate the risk potential of station blackout accident sequences.

2.4 UNIQUE ASPECTS

Two rather unique aspects of the analysis are worth noting. The first is the use of three explicitly defined and displayed time periods in the event tree models. This subject has been briefly mentioned in the previous section and is explained in more detail in Section 4.1 and Appendix A.

The second unique feature of the analysis is the examination of system unavailabilities following the recovery of power to the plant's essential buses. Past PRAs have commonly assumed that, given a station blackout has occurred, once power is restored the plant will achieve a stable and

safe condition. This is true providing subsequent failure probabilities are small. In this study, the probability of such subsequent failures was also examined recognizing that it is not restoration of power alone, but operation of the necessary shutdown cooling systems which brings the plant to a safe condition.

3.0 BASIC PLANT CONFIGURATIONS

As has been previously mentioned, basic plant configurations were selected for study. For actual and hypothetical design variations of these basic configurations as subjects for a sensitivity analysis, see Section 6.2. This section of the report describes the basic features of the systems which compose the "base" configurations used to typify most of the nuclear power plant designs.

3.1 ELECTRICAL POWER SYSTEM

Many design variations of the electrical power system exist today in nuclear power plants. The number of offsite power sources range from two to in excess of six. Although the onsite AC power system is normally supplied by diesel generators, at least one plant site uses a separate power station for emergency AC power. The number of diesels varies from one (plus a gas turbine) to four on a per-unit basis. Often diesels are dedicated to a specific unit. However, many times one or more diesels are shared among units or can be "swung" to other units. Similarly, the DC system design varies from plant to plant with dedicated DC systems as well as shared DC systems between units. In addition, some plants have separate switchyard batteries and/or dedicated DC systems for the diesel generators.

All these and other variations are described in the companion report by ORNL[1] which supplements this study. In general, however, it can be said that the most typical AC/DC design simplifies into a two-division electrical power system on a per-unit basis with sometimes an ability for some loads to be fed by either division's source of power. This base configuration was used in conjunction with the "base" plant designs from this program to study the station blackout issue. Other variations of this basic electrical power system configuration were also analyzed as sensitivities.

Analyses of failure modes of electrical systems, the resulting estimates of the station blackout frequency for each system design, and the recovery potential for each configuration were supplied as inputs by ORNL to this study. Shared interfaces between the electrical systems and the shutdown cooling systems such as DC power and service water (for water-cooled diesels) were properly coordinated in ORNL's and Sandia's analyses so that a failure of such a system in the AC/DC analysis was also simultaneously reflected as a failure of the same system in support of the shutdown cooling systems.

3.2 PWR SHUTDOWN COOLING SYSTEMS

A host of systems can play a part in the removal of decay heat in PWRs once a nuclear power plant has been shutdown. However, Auxillary Feedwater (AFWS) and High Pressure Injection (HPI) are the most important systems under station blackout conditions. Other systems or other operational modes of systems that had already been considered were also reviewed. For PWRs, most involve low pressure systems which would most likely not operate in the case of station blackout since, with only a small leak, the primary pressure would not decrease enough. These systems are upper head injection, accumulators, and residual heat removal. In any case, their operation would require difficult actions on the part of the operator to decrease primary system pressure or the recovery of AC power which makes their effect on sequence probabilities very small. Appendix B describes in detail the shutdown cooling system design review process and includes descriptions of the many design variations which exist in PWRs. The major reason variations exist in PWR designs is that three major nuclear steam supply system vendors have been responsible for PWRs built in the United States. As a result, although the system functions are quite similar, specific designs have differed from vendor to vendor.

After examining the AFW systems of 33 plants [7 Babcock and Wilcox (B&W), 8 Combustion Engineering (CE), and 18 Westinghouse (W)], it was found that approximately 90% of the plants have a one steam-driven turbine pump train and either one or two motor-driven pump trains. While there are many design differences in terms of the number of steam generators and alternate flow paths available to deliver water, these differences were analyzed and determined to be second or higher order effects and, therefore, were not modeled. With the requirements of the TMI action plan that (1) steam turbine trains be independent of AC power and (2) that AFW systems be automatically actuated, many of the causes of previous large variances in AFW system reliability for the station blackout event as shown in the generic feedwater studies [26-29] have been or will be corrected.

While there are still substantial differences in terms of the number of trains and power sources, it was decided to use as a base case a system of one steam-driven turbine train (DC-dependent) and one motor-driven train (AC-dependent) with each train on a single power supply. All other configurations with a single, steam-driven turbine train were judged to be more reliable. Those systems (about 10%) with two or more steam-driven turbine trains or diesel trains were also judged to be more reliable in the station blackout case.

For HPI, a wide variety of system configurations exist with from 3 to 6 pumps. Since a three-train HPI appears to

be the least redundant, it was selected as the base case. However, there are four possible variations of this; the one we selected is: two trains on AC-A and AC-B, respectively, with the third on AC-A, but switchable to AC-B. All initially draw from the Refueling Water Storage Tank (RWST), but on recirculation must either draw directly from the sump or take suction from the Low Pressure Injection (LPI) trains.

An important consideration is the possibility of using HPI for decay heat removal in a "feed and bleed" mode. For virtually all the B&W plants and about 50% of the Westinghouse plants with high-head pumps, HPI success implies that decay heat removal by "feed and bleed" is possible. However, on those Westinghouse plants and CE plants with low-head pumps, some method of reducing RCS pressure is required by either (1) cooling via the Main Feedwater (MFW) or Auxiliary Feedwater (AFW) systems or (2) venting through one or more Power Operated Relief Valve (PORVs). After comparing the relieving capacity of the PORVs on Westinghouse plants (where "feed and bleed" is deemed possible) and CE plants and also in light of the SASA results, it was concluded that "feed and bleed" is possible if two PORVs can be opened. It is possible because the system pressure will be reduced below the HPI pumps shutoff head. However, the likelihood of being able to open and keep open the PORVs may be small because of the complicated steps and lack of procedures that may exist at some plants. These considerations have been examined in this study.

As a general observation, PWRs have provision for decay heat removal by use of the steam driven AFWS, but suffer from loss of makeup capability during station blackout. Analyses of the "base" designs (further described in Appendix D), along with sensitivity analyses, where required, provide the bases for the observations made in this report.

3.3 BWR SHUTDOWN COOLING SYSTEMS

Similar to the PWR, a number of design variations exist and were reviewed for the BWR. Appendix B delineates the many design variations found among BWR shutdown cooling system designs. Unlike the PWR, most BWRs in the United States have been supplied by just one vendor. Therefore, the basic design characteristics for any particular system in BWRs is found to be virtually the same from one plant to the next containing that particular system. However, considerable evolutionary development has occurred in the BWR design; the most easily recognized differences being the isolation condenser design to the recent high-pressure systems (HPCS-RCIC) and the containment design from the Mark I (torus) design to its present counterpart, the Mark III design.

From a station blackout standpoint, the most striking difference exists between the older isolation condenser designs and the newer high-pressure, makeup system designs.

Furthermore, significant differences in each of these two classes of plants exist. These differences primarily stem from the AC-independent systems, their functions, and capabilities. As a result, four "base" BWR plant configurations (further described in Appendix D) were selected for specific study.

1st Base Configuration:

The basic design of this configuration consists of 1) two AC-independent isolation condensers for shutdown heat removal, 2) no high-pressure, makeup systems except for normal feedwater and the CRD system (both these systems require AC power), 3) the Automatic Pressure Relief System (APRS) for depressurizing the primary system and requiring DC power only, 4) two trains of Low Pressure Core Spray (LPCS) for low-pressure makeup (each train with two sets of pumps and requiring AC power), and 5) two trains (four pumps) of containment spray/cooling and a separate Shutdown Cooling System (SDCS) for long term heat removal (both requiring AC power). Such a design has favorable early heat removal characteristics due to the isolation condenser configuration, but suffers from loss of makeup capability during station blackout.

2nd Base Configuration:

This BWR configuration consists of 1) one isolation condenser, 2) a high-pressure makeup system in the form of an emergency mode of Feedwater Coolant Injection (FWCI), 3) the same APRS as in configuration 1, 4) a more modern two-train LPCS with one pump per train and requiring AC power, 5) a modern two train Low Pressure Coolant Injection/Low Pressure Coolant Recirculation System (LPCI/LPCRS) design with two pumps per train and requiring AC power, and 6) a separate shutdown cooling system similar to the first configuration. Such a design has somewhat less favorable early heat removal characteristics than the first design but only slightly better makeup capability due to the FWCI system if AC power is restored.

3rd Base Configuration:

This BWR configuration is typical of the BWR-4 design. These plants have HPCI/RCIC high-pressure cooling and makeup systems requiring DC power only, 2) an Automatic Depressurization System (ADS) which is similar to the earlier APRS, and 3) the modern LPCS/LPCI/LPCRS configuration. Such a design has both cooling and makeup capability in at least the short term during station blackout but does need AC power to provide long-term heat removal.

4th Base Configuration:

This BWR configuration is typical of the latest BWR-5, 6 designs. These designs are similar to the BWR-4 except the steam-driven HPCI is replaced by a motor-driven HPCS (with dedicated diesel, DC, and service water system), and the low pressure systems are the same but tend to have a little less redundancy. The advantages and disadvantages of this configuration are similar to the third design. Other systems or other operational modes of systems that had already been considered were also reviewed. For BWRs, the primary cooling systems are so redundant that for example, use of RCIC/RHR in the steam condensing mode or RHR containment spray does not significantly increase the probability of getting cooling when power is restored. As another example, the control rod drive system has limited makeup capacity (<100 gpm), and so was not treated in this study.

As a general observation, BWR-2s and some-3s provide for decay heat removal by use of an isolation condenser but suffer from a lack of makeup capability during station blackout. While the the BWR 3 to BWR-6s with HPCI/RCIC or HPCS/RCIC, can provide interim heat removal and makeup, they lack long-term heat removal capability unless AC power is restored. Analysis of the "base" designs (further described in Appendix D), in conjunction with sensitivity analyses, where required, provide the basis for the observations made in this report.

3.4 INSTRUMENTATION

During a station blackout, certain information (such as steam generator level or primary pressure and temperature) is necessary to shut the plant down safely. In order to determine what information would be potentially available during a station blackout, a review was made of past PRAs and Final Safety Analysis Reports (FSAR's). Some plant visits were made to determine the power source for various instruments. As a result of this review, we have concluded that if one DC train was operable, it would give sufficient plant status information to allow safe shutdown of the plant.

The base instrumentation design is composed of two instrumentation trains. Each train either fed directly from a separate DC bus or from a vital AC bus. On a loss of station AC power, instrumentation powered from vital AC (which initially had received power from the emergency AC buses) would receive power through an inverter from its corresponding DC bus after a transfer by either a mechanical switch, an auctioneering diode, or a solid-state electronic switch.

The above designs were also examined for their likelihood of failure during a station blackout. The results are discussed in Section 5.1.1.

4.0 PLANT MODELING AND QUANTIFICATION PROCESS

Since PRA techniques were used to study this issue, event trees and fault trees were used to model the plant configurations under study. This section contains brief descriptions of the models as well as the quantification process used to estimate the core damage probability from station blackout. Detailed descriptions of the models, their development, and the data used are found in Appendices A, C, and E.

Two points should be made regarding the models. First, failure of reactor scram is considered probabilistically low enough in conjunction with a station blackout so as to be eliminated from further analysis. The highest values reported for failure to scram appear to be approximately 1E-4/demand[66]. Given a loss of power, it is believed the scram unreliability is even less since the dominant failure modes associated with reactor protection systems are a result of failure to remove power from the hardware which keeps the rods out of the core. This combined with upper-bound station blackout frequencies of approximately 1E-3/year. results in a worst-case station blackout with failure to scram sequence to be <1E-7. Best estimate values would appear to make this a <1E-8 sequence which is small compared to other station blackout-related accident sequences.

Second, brief but not detailed analyses of such items as the contributions of seismic and fire events and the effects on the spent fuel pool have been conducted. Other external events were also treated, at least as causes of the loss of offsite power as covered in ORNL's report[1]. These subjects are discussed in Appendices I and J.

4.1 EVENT TREES

Three event trees were used to depict all the plants within the scope of this study. Two of the event trees shown as Figures 1 and 2 (for PWRs and isolation-condenser BWRs) are identical in structure but involve different systems. The structure is identical because functionally these two classes of plants react similarly to a station blackout, i.e., heat removal can continue to be provided by the AFWS or isolation condenser but RCS makeup requires AC power (except for those BWR isolation condensers with HPCI). Figure 3 depicts the event tree for non-isolation condenser BWRs which can continue to provide both heat removal and RCS makeup without AC power but which requires AC power for long-term removal of decay heat and makeup.

Figure 1 GENERIC PWR EVENT TREE FOR STATION BLACKOUT

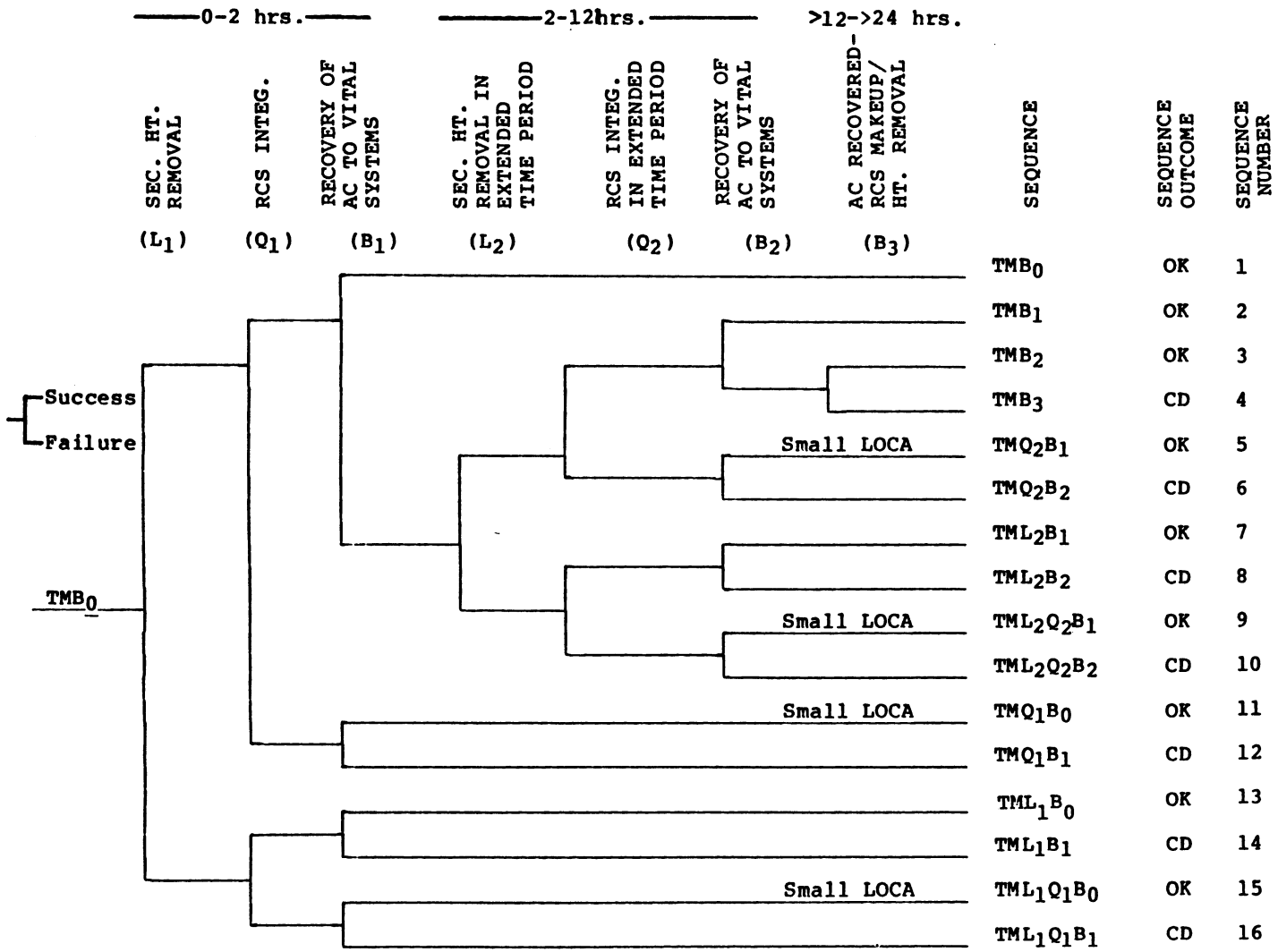

Figure 2. GENERIC BWR EVENT TREE FOR STATION BLACKOUT (BWR2 - BWR3)

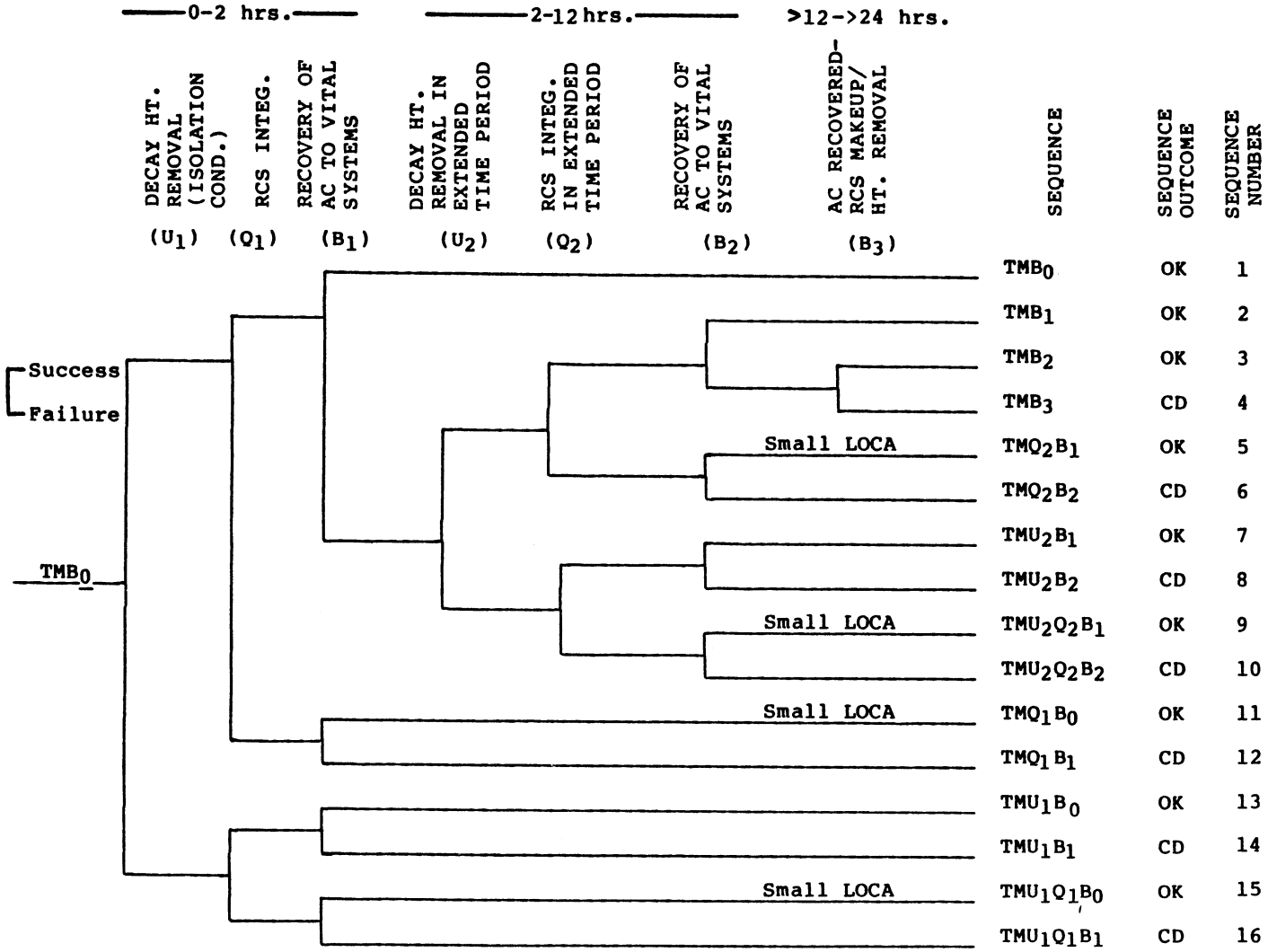

Figure 3. GENERIC BWR EVENT TREE FOR STATION BLACKOUT (BWR3 - BWR6)

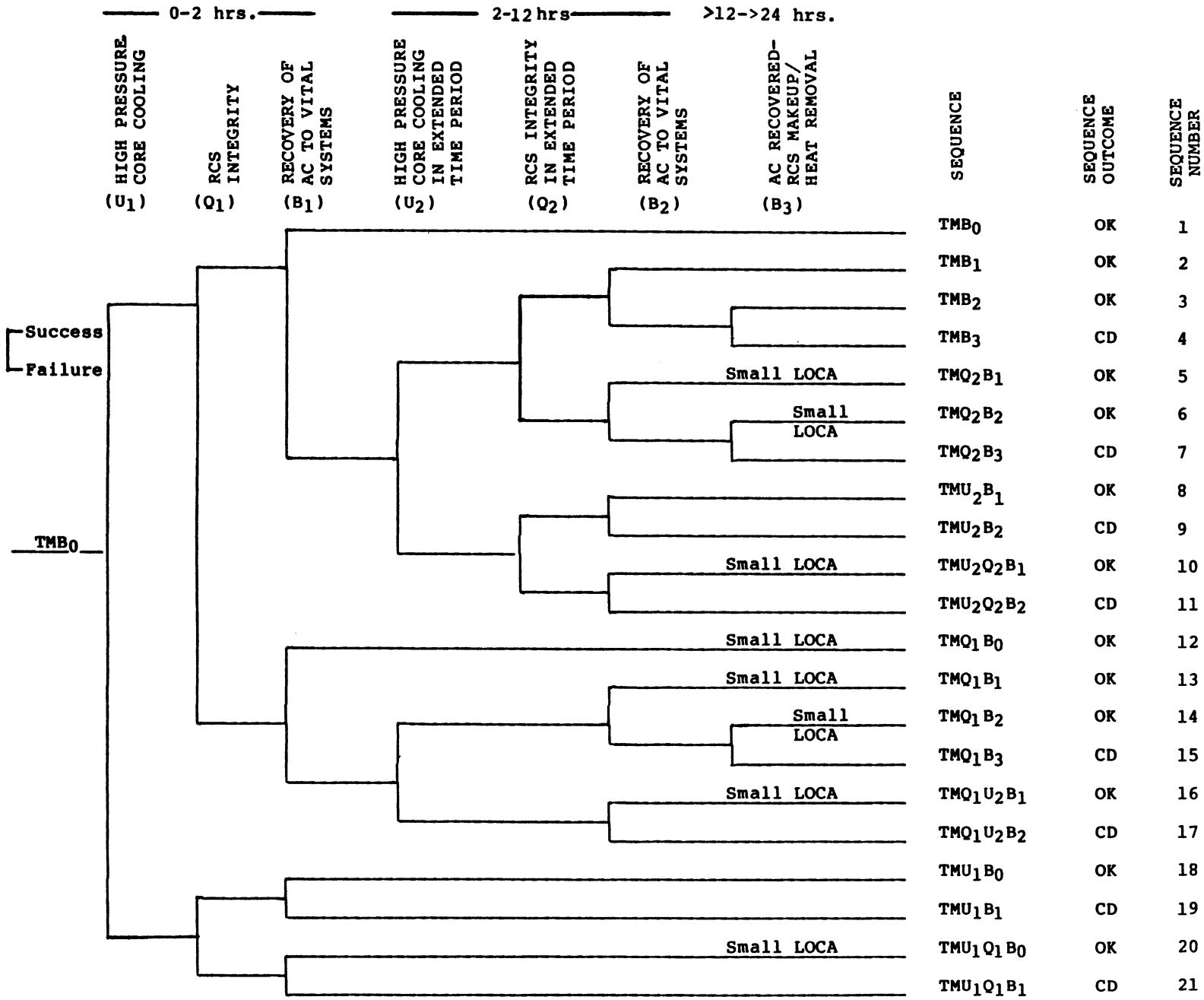

All the event trees are constructed "given" station blackout as the initiating event. The rather unique feature of each tree is the explicit separation in time of the subsequent events. This feature is briefly described below. More detailed information concerning the event tree headings and tree structure is provided in Appendix A.

Event tree headings with a subscript "1" involve success or failure of shutdown cooling systems, their support systems (as necessary), RCS integrity, and the restoration of AC power (DC power, if it too is lost) in the initial time frame to prevent core damage. Depending on the specific sequence and plant type, approximately 1/2 to 2 hours is typically available before core uncovery in this first time frame. Failure modes typical of this time frame include such items as hardware failures, test and maintenance outages, a stuck-open relief valve, and failure to restore power quickly.

Event tree headings with a subscript "2" involve success or failure of the same systems and functions but are due to the possibility of new failure modes which appear if a prolonged AC outage occurs. Failure modes typical of this time frame include such considerations as degradation and failure of RCS pump seals, system failure due to prolonged loss of ventilation, and battery power depletion due to use of DC power without charging capability. Typical time periods in which these type failures become important are in about 2 to 12 hours, although this time may extend to 16 or more hours.

Finally, event tree headings with a subscript "3" involve the very long time frame failure modes. These failures are primarily concerned with the need to provide continued RCS cooling and makeup or, in some cases, containment cooling.

Although not shown on the event trees, an additional recovery of AC power before the last time to prevent containment failure was considered for all core damage sequences. Depending on one's assumptions regarding the containment systems' performance in a core melt environment, the containment may even "survive" the core melt and remain intact. These areas are still quite uncertain. The possibilities are discussed later in this report but are not rigorously quantified.

4.2 FAULT TREES

Detailed fault trees were drawn for the systems and features represented by each event on the event trees. As stated earlier, the fault trees were drawn with support features, other dependencies, and important human actions explicitly shown on the trees, while the other component hardware or test and maintenance unavailabilities were combined on essentially a train basis. Furthermore, "house gates" were used to pick design variations to be studied and to introduce certain failure modes at any time "t" after station blackout. Figure 4 depicts in a simple fault tree manner the basic philosophy behind the structure of a typical fault tree. More detailed representations of the actual fault trees used in the PWR and BWR analyses are provided in Appendix C.

4.3 ACCIDENT SEQUENCE ANALYSIS

The development of the accident sequence probabilities for each "base" plant configuration involved the quantification of the ways (minimal cut sets) that loss of shutdown cooling and resulting core damage could occur. The results of this quantification were used to obtain the accident sequence probabilities of the event trees. The steps followed in this process are delineated below.

First, Boolean algebra expressions for each of the fault trees were obtained using the "SETS" computer code[67]. This results in mathematical expressions for the ways the top event of each fault tree can occur.

Second, these expressions are combined using the success and failure states of each expression, as appropriate, to form the core damage sequences depicted on the event trees, again using the "SETS" code. The resulting sequence expressions were then combined with similar expressions (from ORNL) for ways to cause station blackout to give a total sequence expression for each event tree sequence.

Basic and undeveloped event input data, as provided in Appendix E, were then used with "SETS" to provide good, first-order approximations for the sequence probabilities using the rare-event approximation. For the potentially dominant sequences identified, a more rigorous quantification process was then performed using the "SEP" computer code[68]. In this final step, the data (assumed as median values with log-normal distributions for use in the code) and the respective range factors were propagated through each dominant cut set using Monte Carlo simulation. This results in the final listing of dominant accident sequences with the median, mean, and ranges given for each accident sequence. Containment analysis considerations are then further added to these accident sequences to provide a risk perspective.

FIGURE 4. TYPICAL FAULT TREE STRUCTURE

OVERALL TOP LOGIC:

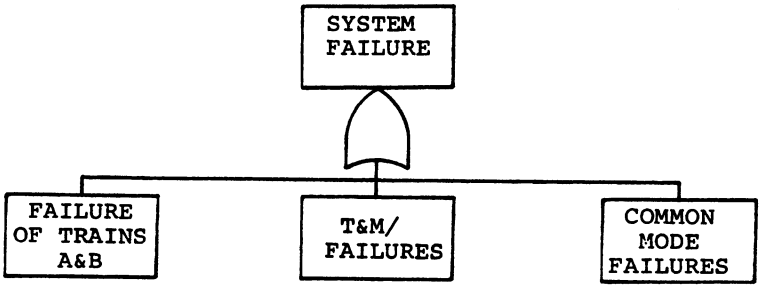

FAILURES TYPICALLY DEPICTED AS:

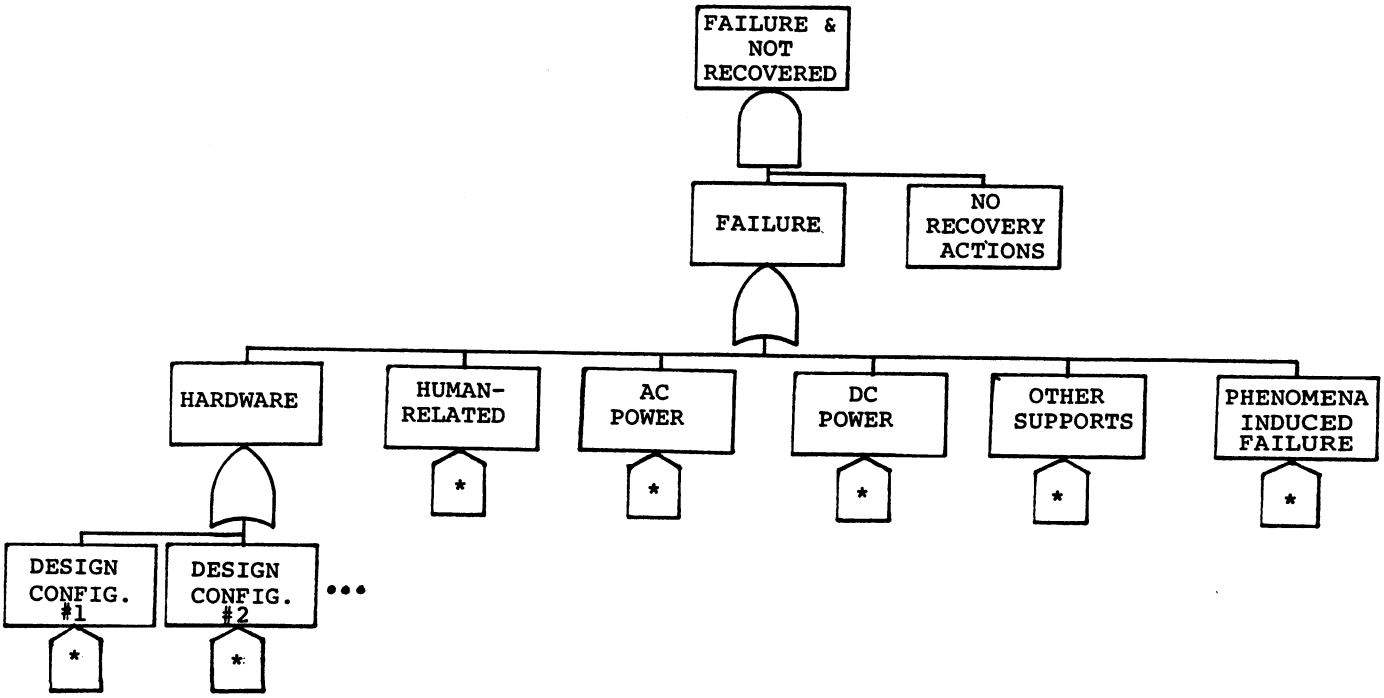

*Turn "on" and "off" to select design variations and to introduce failure modes at specific times following the initiating event.

5.0 RESULTS

5.1 GENERIC "BASE" PLANT ACCIDENT SEQUENCE RESULTS

5.1.1 PROBABILITIES AND UNCERTAINTIES

Presented in this section are the results of the station blackout study with focus on the generic "base" plant configuration analyses. Tables 1-5 summarize the results of the accident sequence quantification process, and Figures 5-9 pictorially represent the same sequence probabilities. Description of the generic "base" plant configurations are in Appendix D and have been previously listed in Section 4 of this report.

All the values in the tables have been rounded to the nearest "0.5." The values shown for the diesel generators are for those requiring service water for cooling. Core damage probabilities for plants with air-cooled diesels are nearly the same. (Approximately 50 to 95 percent of the values shown in all cases except for one of the TMQ_2B_2 PWR sequences and the TMU_2B_2 sequence for BWR configuration #2.) Because of the similarity, the plants are not listed separately. (See the ORNL blackout report for the specific data.) [1]

Shown in the tables are the point value, mean, median (50 percent value), and the fifth and ninety-fifth percent probabilities for each sequence. The point value represents a "best guess" estimate using point values for all the failure probabilities and initiating event frequencies, and the rare-event approximation. The mean and other distribution values use the point values as medians with a log-normal distribution using appropriate uncertainty bounds for each failure probability and initiating event frequency (in order to be compatible with the SEP code). The resulting Monte Carlo simulation values represent the mean, 5/50/95 percent probabilities per reactor year for station blackout causing core damage. It should be noted that selection of the lognormal distribution will tend to lead to a larger difference between the point estimates and the mean values than the selection of other possible distributions. This is because the large tail on the distribution tends to bias the results in a "conservative" direction (i.e., they will be higher). Regarding the 5 and 95 percent values, it should be noted that these represent more than just statistical uncertainties in the data; they also reflect design and/or operational differences from plant to plant which are not significantly different from the generic "base" configurations (i.e., the error factors include both the statistical uncertainties and the design/operational differences). It is also believed that these respective values represent reasonable "extremes" for the core damage probability for the generic configurations.

Table 1

PWR Base Configuration 1*
Station Blackout - Core Damage Sequence Probabilities

(See Figure 5)

Sequences (See Fig. 1)	Point Value	Probability/Reactor Year			
		Mean	5%	50%	95%
TML_1B_1 & $TML_1Q_1B_1$	6.5E-6	3.0E-5	2.5E-6	1.5E-5	9.5E-5
TML_2B_2 & $TML_2Q_2B_2$ (battery depletion)	1.5E-5	5.0E-5	4.0E-6	2.5E-5	1.5E-4
TMQ_2B_2	1.0E-5	6.0E-5	2.5E-6	2.0E-5	1.5E-4
TML_2B_2 & $TML_2Q_2B_2$ (CST depletion)	3.5E-6	1.0E-5	2.5E-8**	6.0E-6	3.5E-5
TMQ_1B_1, TMB_3	1E-7	were not further evaluated			
Approximate Total	3.5E-5	1.5E-4			

*B&W With 1 Steam Train AFWS, 1 PORV, High Head AC Dependent HPI pumps, 2 AC Divisions)

**If the plant design is such that the operator cannot run the AFWS steam driven pump without electrical power, then this sequence is not possible and its frequency goes to zero while the frequencies of the other sequences increase slightly.

FIGURE 5 (SEE TABLE 1)

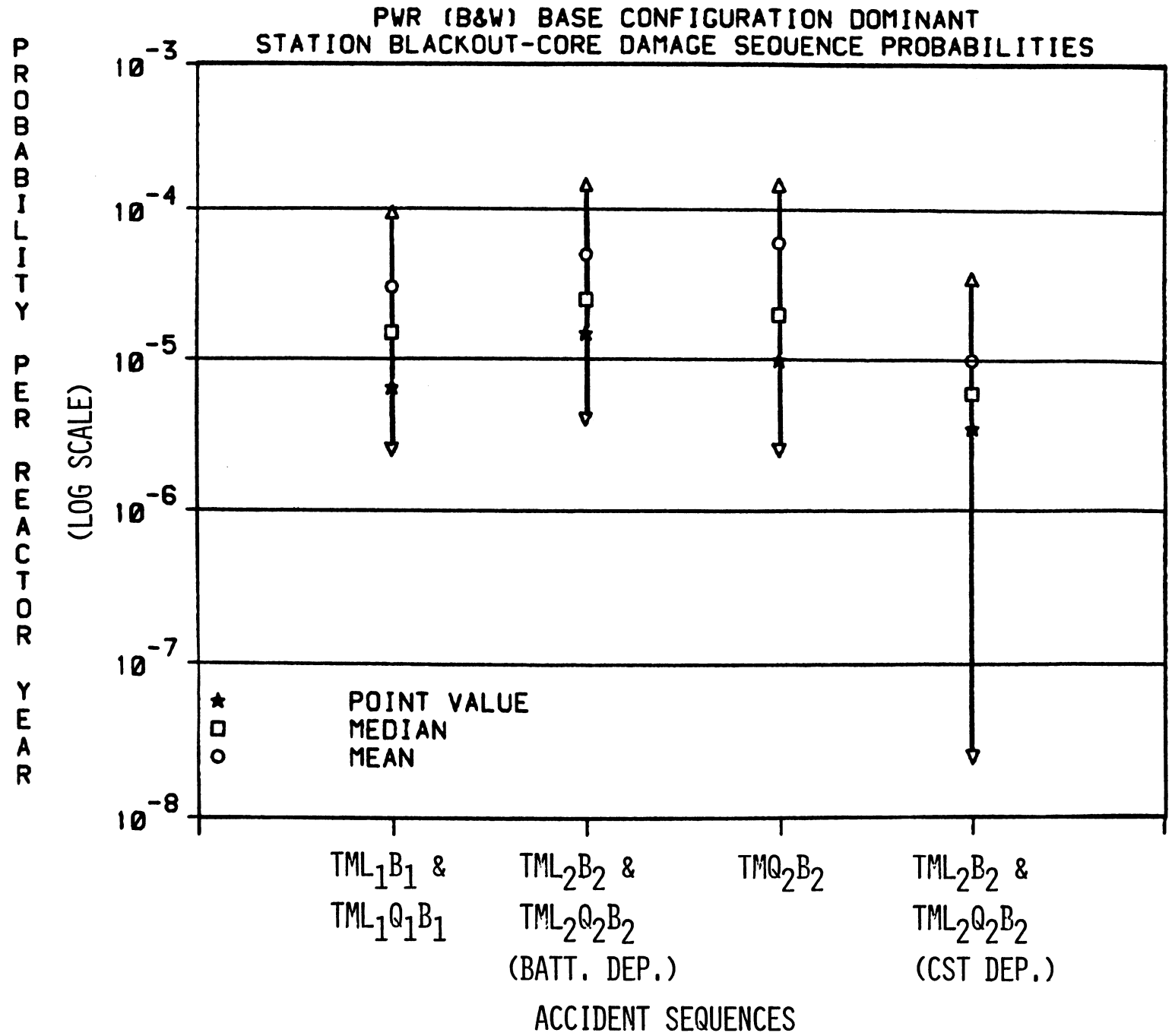

Table 2

PWR Base Configuration 2*
Station Blackout - Core Damage Sequence Probabilities

(See Figure 6)

Sequences (See Fig. 1)	Point Value	Probability/Reactor Year Mean	5%	50%	95%
TML_1B_1 & $TML_1Q_1B_1$	4.0E-6	2.0E-5	1.5E-6	9.0E-6	6.0E-5
TML_2B_2 & $TML_2Q_2B_2$ (battery depletion)	9.0E-6	3.5E-5	3.0E-6	1.5E-5	1.0E-4
TMQ_2B_2	5.0E-6	2.5E-5	1.5E-6	9.0E-6	8.5E-5
TML_2B_2 & $TML_2Q_2B_2$ (CST depletion)	3.5E-6	1.0E-5	2.5E-8**	6.0E-6	3.5E-5
TMQ_1B_1, TMB_3	1E-7	were not further evaluated			
Approximate Total	2.0E-5	9.0E-5			

*W or CE with 1 Steam Train AFWS, 2 or 3 PORVs, High or Low Head AC Dependent HPI pumps, AC Divisions

**If the plant design is such that the operator cannot run the AFWS steam driven pump without electrical power, then this sequence is not possible and its frequency goes to zero while the frequencies of the other sequences increase slightly.

FIGURE 6 (SEE TABLE 2)

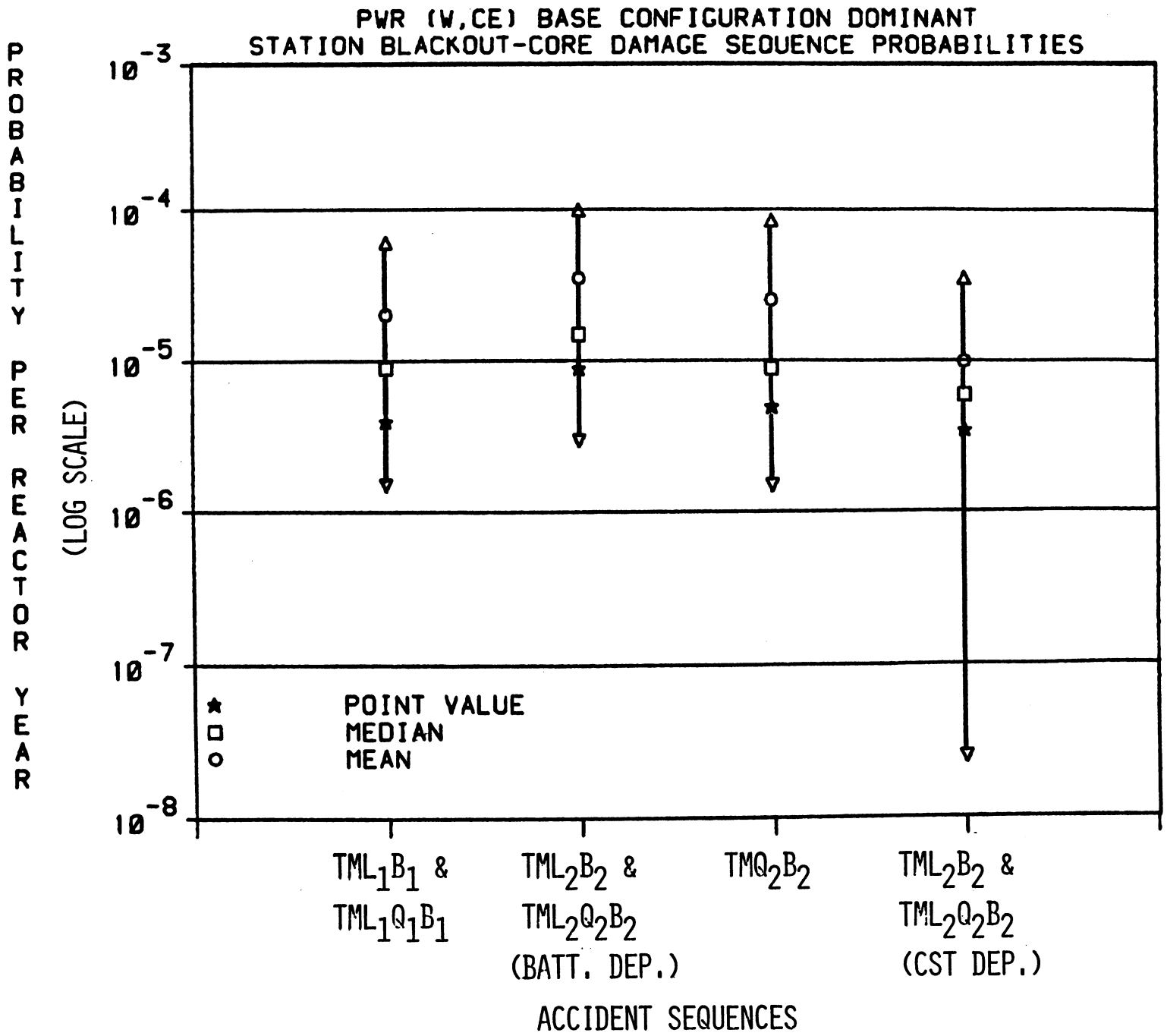

Table 3

BWR Base Configurations 1A & 1B*
Station Blackout - Core Damage Sequence Probabilities

(See Figure 7)

Sequences (See Fig. 1)	Point Value	Probability/Reactor Year			
		Mean	5%	50%	95%
TMQ_1B_1 (both config.)	2.5E-6	2.0E-5	3.0E-7	5.0E-6	9.0E-5
TMU_1B_1 (config. 1B)	1.5E-6	1.0E-5	5.5E-7	4.5E-6	4.0E-5
TMU_1B_1 (config. 1A)	1.5E-6	1.0E-5	3.5E-7	4.0E-6	4.5E-5
TMQ_2B_2 (both config.)	2.0E-5	7.0E-5	9.0E-6	4.5E-5	2.0E-4
$TMU_1Q_1B_1$, TMU_2B_2 $TMU_2Q_2B_2$, TMB_3 (both config.)	1E-7	were not further evaluated			
Approximate Total (either config.)	2.5E-5	1.0E-4			

*2 or 1 Isolation Condensers, Respectively, No AC Independent Makeup, 2 AC Divisions

FIGURE 7 (SEE TABLE 3)

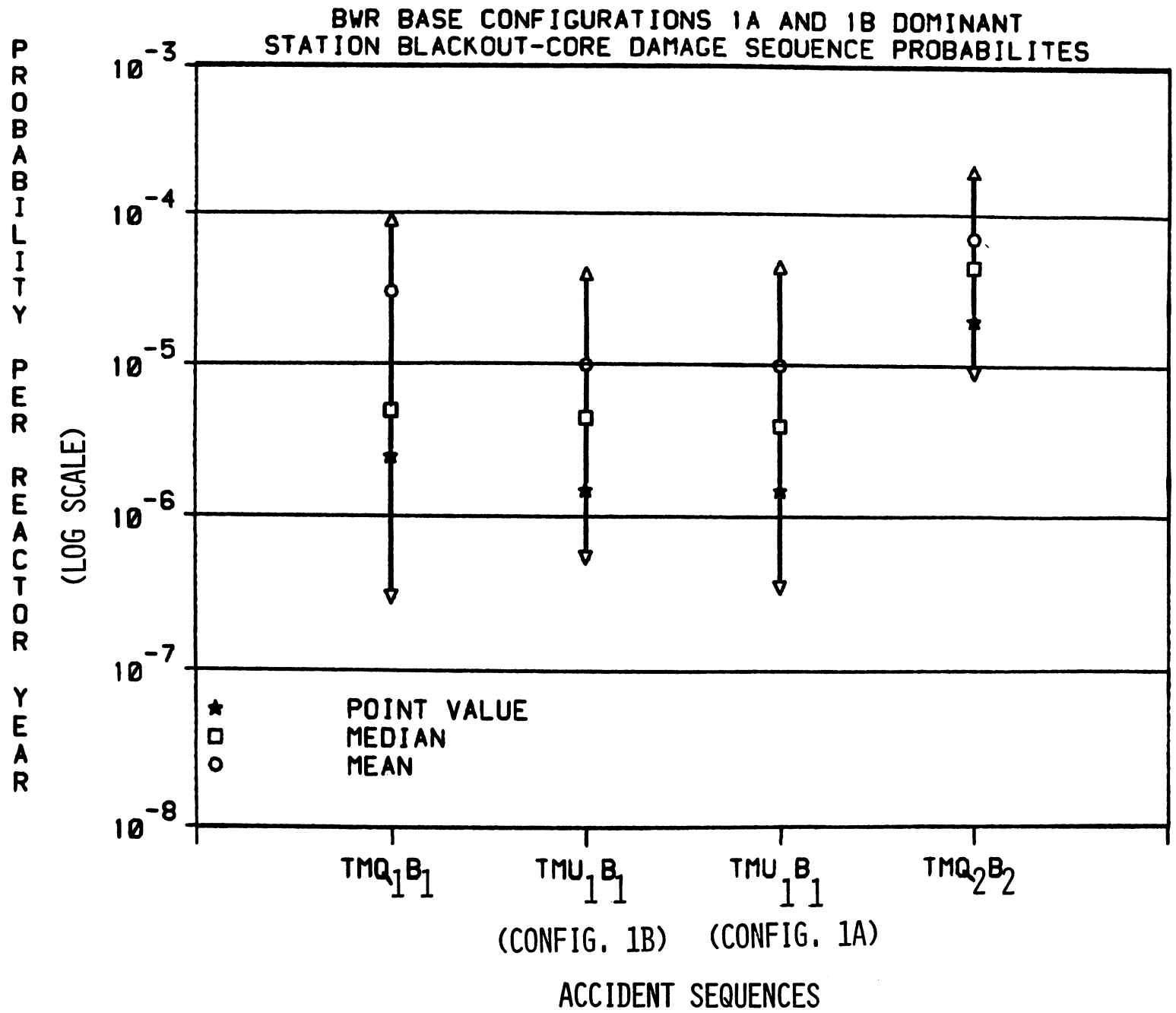

Table 4

BWR Base Configuration 2*
Station Blackout - Core Damage Sequence Probabilities

(See Figure 8)

Sequences (See Fig. 1)	Point Value	Probability/Reactor Year			
		Mean	5%	50%	95%
TMU_1B_1	1.0E-6	6.0E-6	4.5E-7	2.5E-6	2.0E-5
TMU_2B_2	2.5E-5	8.5E-5	1.5E-5	5.0E-5	2.5E-4
$TMU_1Q_1B_1$, TMQ_1B_3, $TMQ_1U_2B_2$ $TMU_2Q_2B_2$ TMB_3, TMQ_2B_3	1E-7	were not further evaluated			
Approximate Total	2.5E-5	9.0E-5			

*HPCI/RCIC Designs, 2 AC Divisions

FIGURE 8 (SEE TABLE 4)

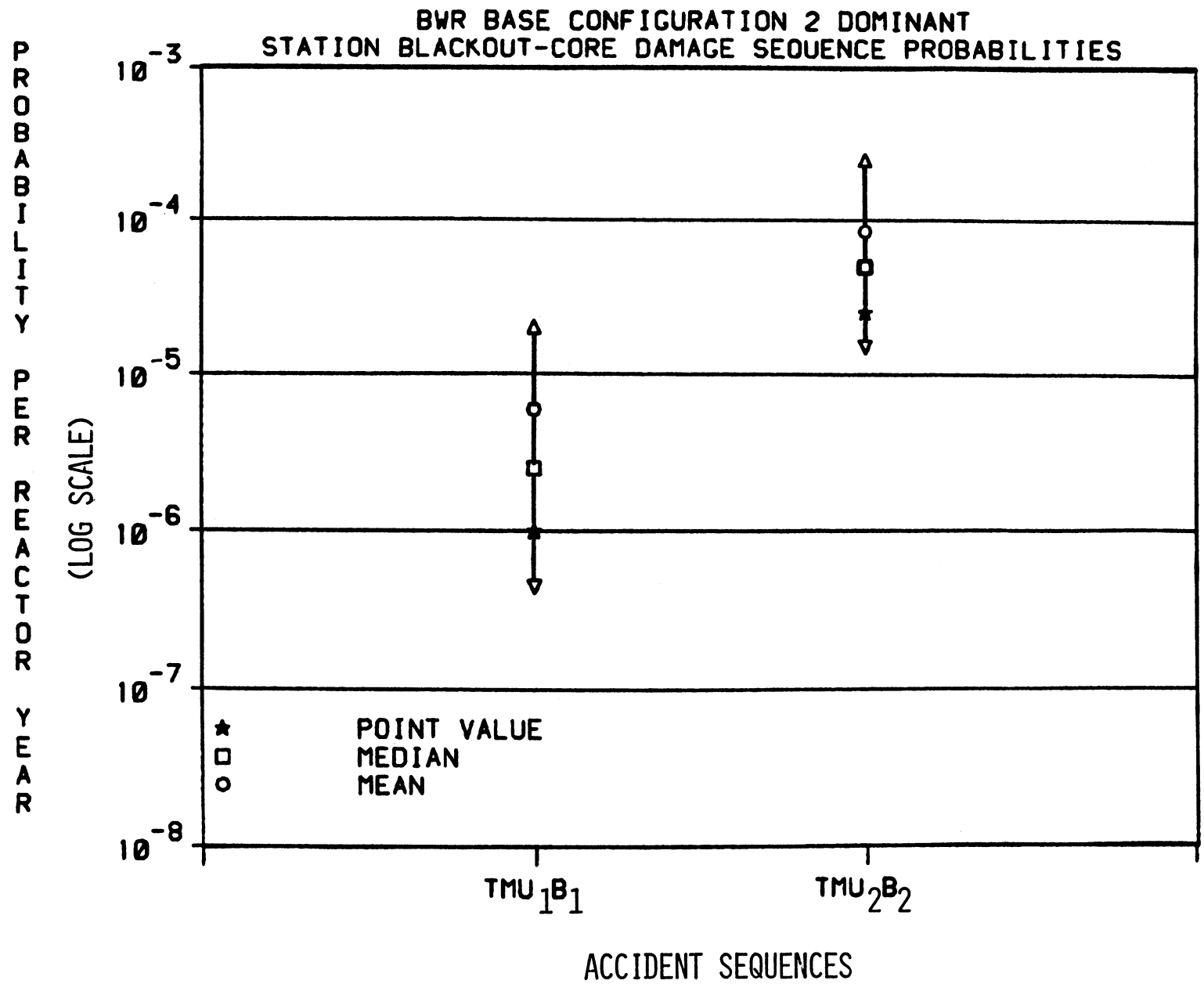

Table 5

BWR Base Configuration 3*
Station Blackout - Core Damage Sequence Probabilities

(See Figure 9)

Sequences (See Fig. 1)	Point Value	Probability/Reactor Year			
		Mean	5%	50%	95%
TMU_1B_1	5.0E-7	3.5E-6	1.5E-7	1.0E-6	1.0E-5
TMU_2B_2	1.0E-6	4.5E-6	4.5E-7	2.5E-6	1.5E-5
$TMU_1Q_1B_1$, TMQ_1B_3, $TMQ_1U_2B_2$ $TMU_2Q_2B_2$ TMB_3, TMQ_2B_3	1E-7	were not further evaluated			
Approximate Total	1.5E-6	8.0E-6			

*HPCS/RCIC Designs, 2 AC Divisions

FIGURE 9 (SEE TABLE 5)

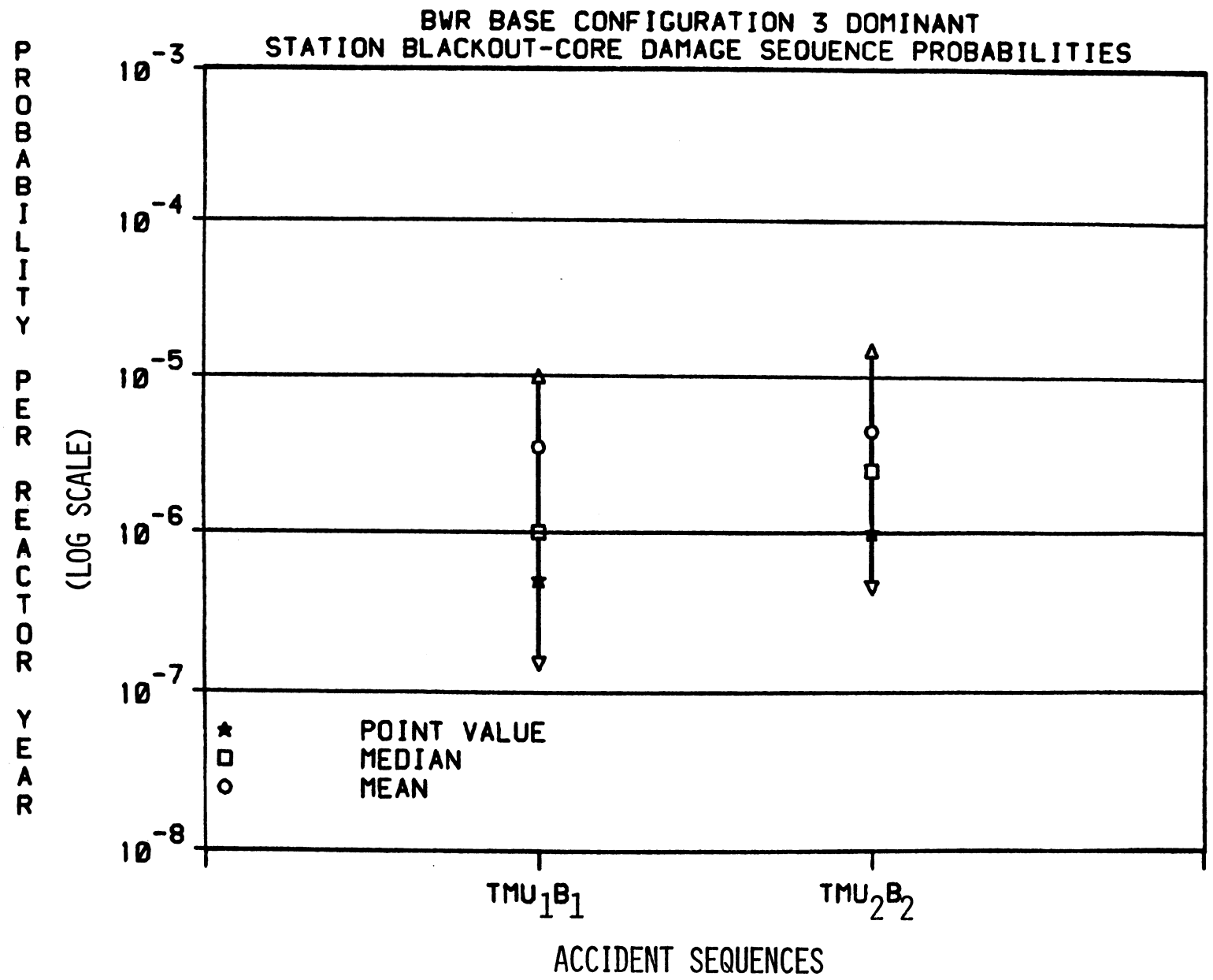

Sensitivity analyses reported in Section 6.2 of this report investigate some significant differences in the AC or shutdown cooling system designs as well as "options" which could be considered for reducing the risks from station blackout accident sequences.

The results of the instrumentation review described in Section 3.4 showed that concurrent instrumentation failure of sufficient magnitude to impact the sequence probability was likely only in the case where switchover of a vital AC to a DC bus was by a mechanical switch. The frequency of station blackout and simultaneous loss of both inverters is approximately 1E-5; however, this in and of itself does not result in core damage. Some subsequent failure in decay heat removal systems must occur (i.e., these systems could be operating successfully but the operator would not have any indication of plant status). The estimated core damage frequency is, therefore, less than or equal to 1E-7.

5.1.2 DOMINANT ACCIDENT SEQUENCE DESCRIPTIONS AND CUTSET INFORMATION

Descriptions of the dominant accident sequences follow as well as brief discussions as to why the other station blackout-related sequences do not dominate the design of concern. The dominant cutsets, or ways to core damage, are also delineated with their respective contribution to the overall core damage probability given for the sequence of interest. This contribution is based on the ratio of the point estimate values for the probabilities of the cutsets to the overall point estimate value for the sequence.

5.1.2.1 PWR BASE CONFIGURATION (B&W, W, OR CE PLANT, ONE STEAM AND ONE OR TWO MOTOR TRAIN AFWS WITH AC-DEPENDENT, PRIMARY, COOLANT MAKEUP SYSTEM (HPI) AND TWO AC/DC DIVISIONS)

1. Sequences TML_1B_1 and $TML_1Q_1B_1$

a. Description of Sequences

A station blackout occurs and is followed by early AFWS failure. AC power is not restored and core uncovery occurs. (This occurs in about one-half hour for B&W type plants or about one hour for W and CE type plants due to boiloff of primary coolant through the PORVs or SRVs following steam generator dryout.)

Whether or not a small transient-induced LOCA is present (occurrence of Q_1), the timing is dominated by the boiloff, making failure of Q_1 somewhat a moot point. Typically, for PORV and primary system isolation failure as part of Q_1,

approximately 98 percent of the total probability of these two sequences exists as TML_1B_1 since the Q_1 failure probability is small. However, if the plant should have two AC valves in an isolation path such as the letdown line, the total probability is approximately split 50-50 between the two sequences. This is because Q_1 success or failure is then dependent on local operator action to manually shut the appropriate isolation valves. This operator action was assessed with a failure probability of 0.5 in the time period of interest. Reactor coolant pump seal leaks are not expected to occur sufficiently fast nor to the magnitude necessary to significantly contribute to the probability of a transient-induced LOCA (occurrence of Q_1) during this time frame.

b. Dominant Cutsets

Initiating Event	Subsequent Failures	Approximate Core Damage Contribution
Offsite power lost and not restored by 1/2 to 1 hour	--Onsite AC power failed by combinations of diesel hardware, T&M, or common mode failures and not restored by 1/2 to 1 hour --AFWS steam train hardware/ T&M failure	76%
Offsite power lost and not restored by 1/2 to 1 hour	--DC common mode (batteries unavailable) fails onsite AC system and not restored by 1/2 to 1 hour --AFWS steam train hardware/ T&M failure or operator fails to local manually operate AFWS steam train successfully within 1/2 to 1 hour	7%
Offsite power lost and not restored by 1/2 to 1 hour	--Service water common mode fails onsite AC system. Not restored in 1/2 to 1 hour --AFWS steam train hardware/ T&M failure	4%
Offsite power lost and not restored by 1/2 to 1 hour	--Onsite AC power failed by combinations of diesel and service water hardware/ T&M failures. Not restored in 1/2 to 1 hour --AFWS steam train hardware/ T&M failure	11%
	TOTAL	98%

2. Sequences TML_2B_2 and $TML_2Q_2B_2$ (battery depletion)

a. Description of Sequences

In these sequences station blackout occurs and is followed by initial success of the steam train AFWS. There is also no early failure of RCS integrity. After approximately five hours, station battery power is sufficiently depleted and is the dominant contributor to failure of the AFWS. Since the diesel generators are considered to require DC power for starting, loading, and field flashing, recovery of the onsite AC system is considered unlikely following all battery depletion. Recovery of offsite power will allow restoration of DC power through the chargers although restoration of offsite power itself may be somewhat hindered if its recovery normally requires DC power from the station batteries.

With the failure of AFWS, core uncovery due to boiloff of reactor coolant follows steam generator dryout. Core uncovery is estimated to occur at approximately six hours for B&W plants (one hour after battery depletion) and at about eight hours for W and CE plants.

Whether or not a small induced LOCA occurs which is caused by subsequent PORV failure or reactor coolant pump seal failures induced by loss of seal cooling, the core damage and sequence timing is dominated by the boiloff making the Q_2 event somewhat a moot point. Probabilistically, late failure of RCS integrity (Q_2) is either quite low by PORV stuck-open failure or can be significant if by reactor coolant pump seal failures. The latter failures are assessed to have a 50 percent chance of being of sufficient magnitude by these time periods to at least contribute to the loss of primary coolant (see Appendix G).

b. Dominant Cutsets

Initiating Event	Subsequent Failures	Approximate Core Damage Contribution
Offsite power lost and not restored by 6 or 8 hours	--Onsite AC power failed by combinations of diesel hardware, T&M, or common mode failures and not restored by 5 hours --Operator fails to local manually operate steam train AFWS successfully with no power	79%

Offsite power lost and not restored by 6 or 8 hours	--Onsite AC power failed due to service water common mode and not restored in 5 hours --Operator fails to local manually operate steam train AFWS successfully with no power	6%
Offsite power lost and not restored in 6 to 8 hours	--Onsite AC power failed by combination of diesel and service water hardware/T&M failures and not restored in 5 hours --Operator fails to local manually operate steam train AFWS successfully with no power	14%
	TOTAL	99%

3. Sequence TMQ_2B_2 (B&W plants)

a. Description of Sequence

Following a station blackout, the AFWS steam train operates initially and continues to function either because AC power is recovered before battery depletion or the operator succeeds in local manual operation of the steam train with no power. However, reactor coolant pump seal leaks occur which cause core uncovery in about eight hours due to primary system coolant loss and shrinkage. A probability of 0.5 is assessed for this event (see Appendix G).

Makeup provided by HPI cannot be restored because either AC power is not yet restored or cooling of the HPI pumps is not available due to the initial loss and nonrecovery of service water which is assumed to affect component cooling water success to the HPI pumps and other loads.

b. Dominant Cutsets

Initiating Event	Subsequent Failures	Approximate Core Damage Contribution
Offsite power lost but restored in 5 hours	--Onsite AC power failed by service water common mode and service water not restored in 8 hours --Seal leak occurs	53%

Offsite power lost and not restored in 8 hours (AFWS runs successfully to this time)	--Onsite AC power failed by combinations of diesel hardware, T&M, or common mode failures and not restored in 5 hours --Seal leak occurs	33%
Offsite power lost and not restored in 8 hours (AFWS run successfully to this time)	--Onsite AC power failed by combinations of diesel and service water hardware, T&M, or common modes and not restored in 5 hours --Seal leak occurs	9.5%
	TOTAL	98%

4. Sequence TMQ_2B_2 (W, CE plants)

a. Description of Sequence

This sequence is virtually the same as the previous sequence but extends to approximately 12 hours due to the larger quantity of coolant loss required to uncover the core. As in the previous case, AC power is restored by approximately five hours or it is not restored and the AFWS steam train is operated successfully by local manual operation. AC power is restored at approximately 8 hours when the CST is depleted so that transfer to secondary water sources for AFWS (typically AC dependent) can be accomplished. Otherwise, the accident scenario becomes a TML_2B_2 or $TML_2Q_2B_2$ sequence involving CST depletion. (These sequences are described later in this report.)

b. Dominant Cutsets

Initiating Event	Subsequent Failures	Approximate Core Damage Contribution
Offsite power lost but restored in 5 hours	--Onsite AC power failed by combinations of service water hardware, T&M, or common modes and service water not restored in 12 hours --Seal leak occurs	91%
Offsite power lost and not restored until 8 hours (AFWS run successfully to this time)	--Onsite AC power failed by service water common mode and service water not restored in 12 hours --Seal leak occurs	5%

Offsite power lost but restored in 5 hours	--Onsite AC power failed by combinations of diesel hardware, T&M, common mode failures and not restored in 5 hours --Seal leak occurs --Operator fails to initiate HPI	3%
	TOTAL	99%

5. Sequences TML_2B_2 and $TML_2Q_2B_2$ (CST depletion)

a. Description of Sequences

In these sequences a station blackout occurs followed by initial success of the steam-driven train of AFWS. Between five and eight hours (following battery depletion) the AFWS steam train is successfully operated by local manual means. At about eight hours, depletion of the water supply in the CST for AFWS operation requires the need for AC power for secondary water supply pumps to feed water to the AFWS. AC power is not yet restored, however, and the loss of secondary cooling eventually causes primary system repressurization and boiloff of primary coolant. Core uncovery occurs in approximately 12 hours without recovery of cooling and primary makeup.

For B&W plants, it should be noted that failure of RCS integrity (Q_2) can only be due to a late demand and sticking open of the PORV when auxiliary feedwater fails. If a reactor coolant pump seal leak had occurred, the accident scenario would follow either the TMQ_2B_2 sequence or the TML_2Q_2B3 (battery depletion) sequence since core uncovery would have occurred most likely before or at Condensate Storage Tank (CST) depletion. In the case of the PORV failure, the boil-off process dominates the time to core uncovery and thus Q_2 becomes a moot point.

For W and CE plants, Q_2 can either be a reactor coolant pump seal leak or a stuck open PORV since the time to core uncovery is approximately the same in either case.

b. Dominant Cutsets

Initiating Event	Subsequent Failures	Approximate Core Damage Contribution
Offsite power lost and not restored in 12 hours (AFWS run successfully for 8 hours)	--Onsite AC power failed by combinations of diesel hardware, T&M, or common mode failures and not restored in 5 hours	80%

Offsite power lost and not restored in 12 hours (AFWS run successfully for 8 hours)	--Onsite AC power failed by service water common mode and not restored in 5 hours	6%
Offsite power lost and not restored in 12 hours (AFWS run successfully for 8 hours)	--Onsite AC power failed by combinations of diesel and service water hardware/T&M failures and not restored in 5 hours	14%
	TOTAL	100%

6. Nondominant Sequences

TMQ_1B_1 -- This sequence requires a stuck open PORV or a large immediate primary system leak to occur leading to early core uncovery. The PORV sticking open is not a likely event, particularly given a low demand probability when AFWS is successful. Large sources of primary system leakage are also of low probability. The more likely scenario is a small leak resulting in sequences TMQ_2B_2 or $TML_2Q_2B_2$.

TMB_3 -- This sequence primarily involves successful operation of all systems except primary system makeup which will eventually be required in the greater than one or two-day time frame to make up for technical specification leakage. Such a scenario appears unlikely given:

(a) The AFWS dependencies which make other sequences more likely;
(b) The potential for reactor coolant pump seal failures making the TMQ_2B_2 sequence more likely; and
(c) The chances of not restoring AC power by one to two days, or in restoring power but not successfully providing primary system makeup in one to two days are low in probability.

5.1.2.2 BWR BASE CONFIGURATIONS 1A and 1B (TWO OR ONE ISOLATION CONDENSER DESIGN, RESPECTIVELY, WITH NO AC-INDEPENDENT PRIMARY COOLANT MAKEUP SYSTEM AND TWO AC/DC DIVISIONS)

1. Sequence TMU_1B_1

a. Description of Sequence

For both base configurations, this accident sequence involves early failure of the isolation condenser system following station blackout resulting in loss of core cooling. The resulting intermittent relief valve operation and boiloff

of primary coolant eventually causes core uncovery without primary system makeup and/or cooling.

The isolation condenser system will most likely operate initially although a small contribution to system failure is associated with the condenser unavailability due to test or maintenance (T&M) or due to system hardware failure for the single isolation condenser design (Configuration 1B). The more likely failure mode of the isolation condenser system includes failure to supply water to the shell side of the condenser(s) due to hardware or T&M contributions of the shell side water supply fire pump coupled with possible AC dependencies for the valves and other pumps in the shell side water supply system. An additional human-related failure assessed at 5E-3 to initiate the shell side water system (if it must be manually started and if any AC valves must be locally operated) also contributes to the probability of this sequence. Failure to provide this water to the condenser(s) in approximately one hour results in depletion of the condenser water supply, subsequent loss of core cooling, and eventual core uncovery in approximately one and one-half to two hours. Without AC power restoration in this time frame, other core cooling measures and/or makeup cannot be provided, resulting in an early core uncovery.

b. Dominant Cutsets

Initiating Event	Subsequent Failures	Approximate Core Damage Contribution
Offsite power lost and not restored in 1-1/2 to 2 hours	--Onsite AC power failed by combinations of diesel hardware, T&M, or common mode failures and not restored in 1-1/2 to 2 hours --Fire pump hardware/T&M failure for shell side water supply	58% (Config. 1A) 49% (Config. 1B)
Offsite power lost and not restored in 1-1/2 to 2 hours	--Onsite AC power failure as above --Operator fails to initiate shell side water and/or local manually operate AC shell side valves	27% (Config. 1A) 24% (Config. 1B)

Offsite power lost and not restored in 1-1/2 to 2 hours	--Onsite AC power failed by service water common mode and not restored in 1-1/2 to 2 hours --Fire pump failure as above	3% (Config. 1A) 2% (Config. 1B)
Offsite power lost and not restored in 1-1/2 to 2 hours	--Onsite AC power failed by service water common mode as above --Operator failure as above	1% (Both configurations)
Offsite power lost and not restored in 1-1/2 to 2 hours	--Onsite AC power failed by combinations of diesel and service water hardware/T&M failures and not restored in 1-1/2 to 2 hours --Fire pump failure as above	7% (Config. 1A) 6% (Config. 1B)
Offsite power lost and not restored in 1-1/2 to 2 hours	--Onsite AC power failed by combinations of diesel/ service water failure as above --Operator failure as above	3% (Both configurations
Offsite power lost and not restored in 1 hour	--Onsite AC failed for all above reasons --Isolation condenser-T&M	12% (Config. 1B only)
	TOTAL	96% (Config. 1A) 97% (Config. 1B)

2. Sequence TMQ_1B_1

a. Description of Sequence

This accident sequence involves early failure of RCS integrity following station blackout due to a demanded and then stuck open relief valve. The subsequent loss of primary water inventory under this LOCA condition causes core uncovery in approximately 1/2 hour without primary system makeup. With AC-power not restored in about 1/2 hour, makeup cannot be provided, resulting in early core damage.

b. Dominant Cutsets

Initiating Event	Subsequent Failures	Approximate Core Damage Contribution (Both Configurations)
Offsite power lost and not restored in 1/2 hour	--Onsite AC power failed by combinations of diesel hardware, T&M, or common mode failures and not restored in 1/2 hour --SRV demanded and stuck open	80%
Offsite power lost and not restored in 1/2 hour	--Onsite AC power failed by service water common mode and not restored in 1/2 hour --SRV demanded and stuck open	4%
Offsite power lost and not restored in 1/2 hour	--Onsite AC power failed by combinations of diesel and service water hardware/T&M and not restored in 1/2 hour --SRV demanded and stuck open	12%
	TOTAL	96%

3. Sequence TMQ_2B_2

a. Description of Sequence

This accident sequence is characterized by a recirculation pump seal LOCA following the station blackout condition due to the extended loss of pump seal cooling. (While the pump can be isolated, this requires AC power which has not been restored.) While the isolation condenser continues to operate, thus supplying core cooling, the primary coolant is being depleted due to the LOCA condition such that a sufficient amount of water inventory is lost to uncover the core in approximately one-half day. By this time, AC power may have not yet been restored, thus preventing successful makeup of primary water inventory. In addition, it should be noted that possible battery depletion in approximately five hours will cause loss of instrumentation, making it difficult for the operator to monitor plant status beyond five hours. Also, onsite power is considered non-recoverable after five hours due to its

dependence on DC power for starting. Even if offsite AC power is restored, it is assumed for these generic base configurations that all AC pumps require cooling that is either directly or indirectly associated with service water operation. Failure to recover service water, if it was lost thus causing the initial diesel failure, still prevents primary system makeup in the time required.

In either case, subsequent core damage then results, yielding a potential late core melt and possible containment failure.

b. Dominant Cutsets

Initiating Event	Subsequent Failures	Approximate Core Damage Contribution
Offsite power lost and not restored in 12 hours	--Onsite AC power failed by diesel hardware, T&M, or common mode failures and not restored in 5 hours --Seal leak occurs	48%
Offsite power lost and not restored in 12 hours	--Onsite AC power failed by service water common mode and not restored in 5 hours --Seal leak occurs	5%
Offsite power lost and not restored in 12 hours	--Onsite AC power failed by combinations of diesel and service water hardware/T&M failures and not restored in 5 hours --Seal leak occurs	7%
Offsite power lost but restored in 12 hours	--Onsite AC power failed by combinations of service water hardware, T&M, or common mode and service water not restored in 12 hours --Seal leak occurs	40%
	TOTAL	100%

4. Nondominant Sequences

$TMU_1Q_1B_1$ -- This sequence is not dominant since it involves more independent failures than the TMU_1B_1 and TMQ_1B_1 sequences do. Since the timing of the sequence varies little as compared with the TMQ_1B_1 sequence (U_1 failure is a moot point), the

consequences of this sequence are about the same as the TMQ_1B_1 sequence. This sequence is probabilistically about two orders of magnitude less frequent than the TMU_1B_1 or TMQ_1B_1 sequences due to the concurrent failures necessary.

TMU_2B_2 -- This sequence is not dominant since long term AC loss even with battery depletion does not appear to affect the isolation condenser. The primary side of the condenser is passive, once initiated, and requires no further control or active operations. The shell side water supply has been operating by use of the fire pump which draws suction from a usually limitless supply of water. The most likely scenario involving this sequence is failure of the diesel-driven fire pump to run. In all cases, the failure probability of the isolation condenser in this longer time frame appears quite low, making this sequence about two orders of magnitude lower in its frequency than the other dominant sequences.

It should be noted, however, that in any long-term sequence such as this one, the operator would be "flying blind" without AC and possibly DC power, making it difficult to ascertain plant status and safety margins.

$TMU_2Q_2B_2$ -- Since the consequences of this sequence are similar to that of the TMQ_2B_2 sequence, and the additional concurrent failure of the isolation condenser appears to be low in probability, this sequence is not among the dominant sequences listed for these type plants.

TMB_3 -- Even if the isolation condenser can continue to provide core cooling for extended periods and RCS integrity is maintained so that leakage from the primary system is minimal; without containment cooling, long-term AC loss can cause eventual heating and overpressurization of the containment. With the isolation condenser removing most of the decay heat to the environment, containment heating would be very slow and probably not be of critical concern for at least several days. By that time, AC power should be restored in order to start any AC-dependent containment and other core cooling systems, as required, making this sequence insignificant in its frequency of occurrence.

Again, however, the difficulties associated with "flying blind" after probable loss of DC due to battery depletion should not be overlooked in long term sequences such as this one.

5.1.2.3 BWR BASE CONFIGURATION 2 (HPCI/RCIC DESIGNS TYPICAL OF BWR-4S WITH TWO AC/DC DIVISIONS)

1. Sequence TMU_1B_1

a. Description of Sequence

This sequence is characterized by early failure of the HPCI and RCIC systems following station blackout and no AC restoration.

Failures of HPCI/RCIC include combinations of hardware/T&M failures for both systems as well as the initial loss of both DC power trains (assessed as 1E-5) due to both batteries being unavailable following the loss of charging due to the loss of offsite power. This latter scenario, which can also prevent the diesel from starting, makes up approximately two-thirds of the probability of this sequence.

The early loss of core cooling causes intermittent relief valve operation, boiloff of primary coolant, and core uncovery in approximately one-half hour.

b. Dominant Cutsets

Initiating Event	Subsequent Failures	Approximate Core Damage Contribution
Offsite power lost and not restored in 1/2 hour	--DC common mode failure (batteries unavailable) fails onsite AC system --Operator fails to local manually operate HPCI or RCIC in time available (assessed as 1.0 due to short time available and difficulties involved with such operation)	66%
Offsite power lost and not restored in 1/2 hour	--Onsite AC power failed by combinations of diesel hardware, T&M, or common mode failures and not restored in 1/2 hour --HPCI/RCIC failed by combinations of hardware, T&M, or common-mode failures	26%
Offsite power lost and not restored in 1/2 hour	--Onsite AC power failed by service water common mode and not restored in 1/2 hour	1%

	--HPCI/RCIC failed by combinations of hardware, T&M, or common mode failures	
Offsite power lost and not restored in 1/2 hour	--Onsite AC power failed by combinations of diesel and service water hardware/T&M failures and not restored in 1/2 hour --HPCI/RCIC failed by combinations of hardware, T&M, or common mode failures	3%
	TOTAL	96%

2. Sequence TMU_2B_2

a. Description of Sequence

The characteristics of this sequence include long-term failure of core cooling using HPCI and/or RCIC in about five to eight hours after the initiating event. If there is no restoration of AC power, this failure will cause eventual boiloff of primary coolant and core damage in about eight to twelve hours. Onsite power, if not restored in approximately five hours (i.e., before battery is depleted) is given no credit for starting beyond that time.

Even if offsite power is restored, failure to recover service water, if it failed thus causing the diesels to fail, will prevent any AC pump operation due to the need for pump cooling. The HPCI/RCIC systems will also eventually fail due to the continued loss of ventilation which requires service water for cooling.

A number of failure modes can contribute to the failure of HPCI/RCIC in the above time frame. The most important of these appear to be the following:

1) High temperature isolation failure or hardware failure of the two systems (even when system operation is cycled between first RCIC, then HPCI, then RCIC...) in about eight to nine hours due to loss of pump room ventilation or subsequent hardware faults can cause core damage in about 12 hours.

2) Failure of one system (HPCI or RCIC) in the manner given above in about five to six hours coupled with earlier hardware/T&M failure of the "other" system.

3) Either HPCI or RCIC operation cannot be local manually performed (assessed at 0.5) on the loss of DC-control

power. This loss of power is due to battery depletion after the battery has operated about five hours. Such local action appears reasonable only for the RCIC system. The operator action would be hampered by the unusual steps required and the potential adverse pump room environment by five hours into the accident. In addition, loss of instrumentation due to the loss of DC would further hamper operator actions and knowledge of plant conditions.

d) HPCI or RCIC operation is prevented in the five to six hour time frame due to low steam pressure to run the turbines (assessed as 0.1 for HPCI and 0.05 for RCIC).

e) A less significant but possible failure of both systems exists if DC power lasts long enough for switchover to be required. If the water source is not switched from the CST to the suppression pool until automatic transfer takes place on "low level in the CST" at about eight hours, the change to the significantly hotter water in the suppression pool could affect pump operation (assessed failure probability is 1E-2). Switchover failure could also occur with the failure of valves. Little time is available for local manual recovery (this failure and lack of recovery is assessed to have a probability of 5E-3).

All of the above failure modes allude to a high probability of failure of HPCI/RCIC in the time frame indicated. These failures cause loss of core cooling, slow repressurization of the primary system and eventual intermittent relief valve operation, boiloff of primary coolant, and core uncovery in about eight to twelve hours if AC power is not restored.

b. Dominant Cutsets

Initiating Event	Subsequent Failures	Approximate Core Damage Contribution
Offsite power lost and not restored in 1/2 hour	--Onsite AC power lost by combinations of diesel hardware, T&M, or common mode failures and not restored in 5 hours --HPCI/RCIC failed due to high room temperature in 8 hours	19%
Offsite power lost and not restored in 12 hours	--Onsite AC lost due to service water common mode and not restored by 5 hours --HPCI/RCIC failed due to high room temperature in 8 hours	1%

Offsite power lost and not restored in 12 hours	--Onsite AC power lost due to combinations of diesel and service water hardware/T&M failures and not restored in 5 hours --HPCI/RCIC failed in 8 hours due to high room temperature	3%
Offsite power lost and not restored in 8 hours	--Onsite AC power lost by diesel failures as above and not restored in 5 hours --RCIC failed due to high room temperature in 5 hours --HPCI-hardware/T&M early failures --Vice versa for HPCI/RCIC	4%
Offsite power lost and not restored in 8 hours	--Onsite AC power lost by service water common mode and not restored in 5 hours --RCIC failed in 5 hours due to high room temperature --HPCI-hardware/T&M early failures --Vice versa for RCIC/HPCI	1%
Offsite power lost and not restored in 8 hours	--Onsite AC power lost by diesel/service water combinations above and not restored in 5 hours --RCIC failed in 5 hours due to high room temperature --HPCI-hardware/T&M early failures --Vice versa for RCIC/HPCI	1%
Offsite power lost and not restored in 8 hours	--Onsite AC power lost for diesel combinations above and not restored in 5 hours --HPCI/RCIC cannot be local manually operated following battery depletion	22%
Offsite power lost and not restored in 8 hours	--Onsite AC power lost due to service water common mode and not restored in 5 hours	2%

	--HPCI/RCIC cannot be local manually operated following battery depletion	
Offsite power lost and not restored in 8 hours	--Onsite AC power lost by diesel/service water combinations above and not restored in 5 hours --HPCI/RCIC cannot be local manually operated following battery depletion	3%
Offsite power lost and not restored in 8 hours	--Onsite AC power lost for above 3 sets of causes and not restored in 5 hours --HPCI/RCIC failure in 5 hours due to combinations of one system failure because of high temperature, battery depletion or early hardware/T&M and low steam pressure on the other system	8%
Offsite power lost and not restored in 12 hours	--Onsite AC power lost for above 3 sets of causes and not restored in 5 hours --HPCI/RCIC failure in 8 hours due to switchover to hot suppression pool	1%
Offsite power lost and is restored in 8 to 12 hour	--Onsite AC power lost because of service water common mode not restored in 8 to 12 hours --HPCI/RCIC and other systems failed due to lack of service water for room cooling	34%
	TOTAL	98%

3. Nondominant Sequence

TMQ_1B_3, TMQ_2B_3, TMB_3 -- Since small RCS integrity losses should not significantly affect the operation of HPCI/RCIC which can provide both interim core cooling and primary system makeup, and since successful operation of HPCI/RCIC for one day (B_3 time period associated with possible containment failure) appears quite unlikely based on the TMU_2B_2 discussion, these sequences appear to be probabilistically insignificant in relation to the dominant accident sequences listed. However, in

the case of the TMB_3 sequence, it should be noted that there is current research looking into the chugging effect once the pool reaches 200°F which could cause containment failure in the order of 8-12 hours. Since best estimates are that this will not occur, we will assume that the TMB_3 sequence will not lead to containment failure until about 48 hours. [74]

$TMU_1Q_1B_1$, $TMQ_1U_2B_2$, $TMU_2Q_2B_1$ -- These sequences are not among the dominant accident sequences since they are all similar in timing to either the TMU_1B_1 or TMU_2B_2 sequence but involve other concurrent failures of RCS integrity. These additional failures make these sequences less likely by at least one order of magnitude over the dominant sequences. The Q_1 (stuck-open valve) and Q_2 (pump seal LOCA) events are really moot failures anyway, since TMU_1B_1 and TMU_2B_2 are already core damage sequences without the additional minimal effects of the loss of RCS integrity.

5.1.2.4 BWR BASE CONFIGURATION 3 (HPCS/RCIC DESIGNS TYPICAL OF BWR-5S, 6S WITH TWO AC/DC DIVISIONS AND A THIRD DEDICATED DIVISION FOR HPCS)

1. Sequence TMU_1B_1

a. Description of Sequence

This sequence involves early failure of HPCS and RCIC following station blackout and no AC restoration. Failures of HPCS/RCIC are similar to those described for TMU_1B_1 for configuration #2 designs; that is, hardware/T&M failures of HPCS and RCIC make up the major contributions of this sequence's probability. The early loss of core cooling causes intermittent relief valve operation, boiloff of primary coolant, and core uncovery in one-half hour.

b. Dominant Cutsets

Initiating Event	Subsequent Failures	Approximate Core Damage Contribution
Offsite power lost and not restored in 1/2 hour	--Onsite AC power failed by combinations of diesel hardware, T&M, or common mode failures and not restored in 1/2 hour --HPCS/RCIC failed by combinations of hardware, T&M, common mode failures	84%
Offsite power lost and not restored in 1/2 hour	--Onsite AC power failed by service water common mode and not restored in 1/2 hour --HPCS/RCIC failure as above	4%

Offsite power lost and not restored in 1/2 hour	--Onsite AC power failed by combinations of diesel and service water hardware/T&M and not restored in 1/2 hour --HPCS/RCIC failure as above	10%
	TOTAL	98%

2. Sequence TMU_2B_2

a. Description of Sequence

The characteristics of this sequence are similar to those for configuration #2 in that it includes long-term failure of HPCS/RCIC in about five to eight hours. If AC power is not restored, the failure will cause eventual core damage in about eight to twelve hours.

The most important failure modes contributing to HPCS/RCIC failure include:

- Failure of RCIC in about five to eight hours due to high temperature isolation, high temperature failure of the system itself, or failure due to battery depletion effects. These failures are coupled with either early hardware/T&M failure of HPCS or subsequent failure of HPCS on later restarts.
- A less significant but possible failure exists for both systems upon transfer from the CST to the suppression pool at about eight hours into the accident. (See TMU_2B_2 - item "e" discussion for configuration #2). This failure is due to switchover valve failures or pump failure due to higher temperature suction water in the suppression pool.

The above failure modes result in a long-term failure of core cooling which leads to slow repressurization of the primary system, boiloff of primary coolant, and core uncovery in about eight to twelve hours if AC power is not restored.

b. Dominant Cutsets

Initiating Event	Subsequent Failures	Approximate Core Damage Contribution
Offsite power lost and not restored in 8 hours	--Onsite AC power lost by combinations of diesel hardware, T&M, or common modes failures and not restored in 5 hours	65%

	--HPCS-early hardware/T&M failures --RCIC failed due to high room temperature or failure to local manually operate following battery depletion	
Offsite power lost and not restored in 8 hours	--Onsite AC power lost by service water common mode and not restored in 5 hours --HPCS/RCIC failures as above	6%
Offsite power lost and not restored in 8 hours	--Onsite AC power lost by combinations of diesel and service water hardwater/T&M failures and not restored in 5 hours --HPCS/RCIC failures as above	9%
Offsite power lost and not restored in 12 hours	--Onsite AC power lost by 3 sets of causes given above and not restored in 5 hours --RCIC failure as given above --HPCS subsequently failed on a restart	12%
Offsite power lost and not restored in 12 hours	--Onsite AC power lost by 3 sets of causes given above and not restored by 5 hours --HPCS/RCIC failure at 8 hours due to switchover to hot suppression pool	3%
	TOTAL	95%

3. Nondominant Sequences

TMQ_1B_3, TMQ_2B_3, TMB_3 -- These sequences are considered unlikely because AC power recovery seems very likely in the approximately one-day time period which applies to the major failure mode. This major failure mode is containment failure followed by possible core damage.

The statistical data on offsite and onsite power recovery [6] does not consider the possible recovery schemes which could be used in time periods of this nature. If one includes such possibilities as arranging for portable AC supplies, for instance, it would appear that the probability of these sequences is quite low.

It should be noted, however, that successful operation of core cooling out to this time period is not without difficulty. Following probable depletion of the station batteries, only one

channel of instrumentation would be available to monitor plant conditions (i.e., that supplied by the third train of AC/DC power used by HPCS). Lighting conditions would be minimal and only a few but sufficient key plant parameters could continue to be monitored.

$TMU_1Q_1B_1$, $TMQ_1U_2B_2$, $TMU_2Q_2B_2$ -- These sequences are similar to the discussion for the same sequences for configuration #2, but the additional failures required result in the nondominant classification for these sequences.

5.2 CONTAINMENT RESPONSE CONSIDERATIONS

5.2.1 INTRODUCTION

Given the core damage scenarios and probabilities in the previous sections, the containment response to a station blackout must be considered in order to provide information regarding times to containment failure and containment failure modes so that potential risks from station blackout can be determined. (This potential risk information is not a part of this study.)

First, it must be recognized that different containment designs exist. Table 6 lists some typical characteristics of six general classes of these designs. Included is an estimate of their actual failure pressure. Current engineering judgment is tending toward 2 to 3 times design pressure, although some estimates have been higher (e.g., Watts Bar).

Table 6[64,65]

Containment Design Characteristics

Containment Type	Typical Volume ($x10^6 ft^3$)	Typical Design Pressure (PSIG)	Typical Failure Pressure (PSIA)
PWR Ice Condenser	1.2	12	39
PWR Small and Sub-atmospheric Dry	1.8	45	105
PWR Large Dry	2.0	60	135
BWR Mark I	0.3	62	139
BWR Mark II	0.3	45	105
BWR Mark III	1.5	15	45

Because of the relatively large uncertainties that still exist regarding containment response and core melt phenomena, a rigorous quantitative analysis has not been performed. However, it is worthwhile to hold a general discussion which addresses containment failure modes for each containment design given a station blackout.

The possible pressure rises given an H_2 burn are of particular importance in the following discussions. Assuming 100% zirconium-water reaction, the maximum change in containment pressure generated by an H_2 burn is estimated at approximately 90 psig for large dries; 120 psig for Mark IIIs, ice condensers, and subatmospheric dries; and greater than 120 psig for Mark Is and IIs.[64]

5.2.2 DISCUSSION OF PARTICULAR CONTAINMENTS

The following summaries highlight the containment failure information presented in References 3-10,32,34,63-65 as well as judgements currently favored by analysts.

A. PWR Ice Condenser

The chances of an early H_2 burn are somewhat speculative. It is highly dependent on the availability of ignition sources, the degree of steam inerting in the containment since the ice could be condensing the steam, the temperature of the H_2 gas as it escapes the reactor vessel, and relative concentrations in both upper and lower compartments and the probability of the burn propagating between compartments.

A steam spike could occur at the time of reactor vessel failure, approximately 1 hour after core uncovery. If it occurs, containment failure is considered likely due to the low design pressure.

Long-term overpressure failure due to steam and noncondensibles would occur an estimated 2 hours after core uncovery for "B_1" type (early core damage) sequences. This time would be somewhat longer for "B_2" (later core damage) sequences.

If AC power is recovered after core damage but before containment failure, reduction of containment pressure by use of containment sprays could induce an H_2 burn which would likely fail containment. On the other hand, it may reduce the production rate or even the amount of noncondensible gas thus reducing the probability of the overpressure event depending on the assumptions made regarding debris bed coolability.

Many ice condenser containment designs are installing or considering installation of igniters to burn the H_2. If the igniters turn on automatically or the operator turns

them on by procedure when the AC power is restored, containment failure by a sudden large burn is considered very likely.

B. PWR Small and Subatmospheric Dry

Early H_2 burns are considered less likely for these PWRs because of potential steam inerting effects than for ice condensers where the steam is condensed while the ice melts.

A steam spike at the time of reactor vessel failure, about 2 hours after core uncovery, has a chance of failing the containment.

Long-term overpressurization would fail the containment in about 6-12 hours after core uncovery for "B_1" sequences and somewhat longer for "B_2" sequences.

If AC power is restored, considerations are the same as those for the ice condenser.

C. PWR Large Dry

Early H_2 burns are considered less likely than for ice condensers due to potential steam inerting effects. Even if an early H_2 burn were to occur, containment survivability is likely for some large dry PWRs (e.g., Zion) due to higher design pressure and large volume.

A steam spike is also considered unlikely to fail containment for many large dry PWRs because of high design pressure and large volume.

Long-term overpressure failure could occur in about 10 hours after core uncovery for "B_1" sequences; a somewhat longer period would be required for "B_2" sequences.

If AC power is restored, the same considerations exist as for the previous designs except survivability of the containment may be possible depending on the containment pressure at the time of AC recovery, the containment volume and failure pressure, and on the assumptions made regarding debris bed cooling.

D. BWR Mark I

Inerting prevents H_2 burn.

Probability of early steam spikes considered small due to lack of water under the reactor vessel.

Overpressure events considered the most likely failure mode; but the particular failure mechanism is somewhat speculative:

Mechanism

1) Electrical penetration seals in drywell may fail long before containment failure can occur due to high temperature causing some organic compound seals to become embrittled. This bypasses the scrubbing effect of the suppresion pool.

2) Electrical penetration seals are so constructed that they don't blow out. The location of containment failure may be any of the following:

   - Drywell failure. (The pool is bypassed.)
   - Suppression pool fails above the water line. (This allows some scrubbing by hot pool water.)
   - Suppression pool fails below water line. (This allows some scrubbing until water level is insufficient or quencher pipes uncover, thereby possibly bypassing the pool water.)

For the above failure mechanisms, times to containment failure after core uncovery are estimated as follows:

	Mechanism "a" failure	Mechanism "b" failure
For B_1 time period sequences	2-5 hours	4-8 hours
For B_2 time period sequences (injection lost 4-5 hours)	4-6 hours	15 hours
For B_3 time period sequences (containment failure before core melt)	Unknown (depends on specific penetration design)	48 hours*

If AC power is restored before containment failure, it may be possible to prevent overpressurization. This depends on assumptions made regarding debris bed coolability.

E. BWR Mark II

Same considerations as Mark I

*Based on more current estimates from filtered vent program at SNL; WASH-1400[3] used 27 hours.

Mark II design less likely to suddenly burst than Mark I design since Mark IIs are concrete while Mark Is are steel with some concrete used for added support and biological shielding.

F. BWR Mark III

Same considerations as Mark I, II designs with following two exceptions:

1) For the mechanism "a" failure mode, release of radiation to the environment will not yet occur since the entire containment building surrounding the drywell is the wetwell (the suppression pool) itself and it must also fail. Times to containment (wetwell) failure are estimated as:

For B_1 time period sequences 10-15 hours

For B_2 time period sequences 15 hours

For B_3 time period sequences 30 hours or more

2) H_2 burns are much more likely to occur both early and late due to no inerting. With the possible use of igniters, a similar scenario exists as for the ice condensers, i.e., a late H_2 burn after the restoration of power would very likely fail containment.

5.2.3 General Conclusions

It would appear that containment failure following station blackout is a likely event. However, the exact failure mode may vary. (Most PRAs to date have assumed the failure probability to be 1.0, usually by overpressure.) The more likely failure modes have the potential for a "bad" release since they involve above-ground failures via a sudden pressure spike or slow pressure rise. The amount of radioactivity released would, of course, be a function of how much time had elapsed since core melt, which containment systems were restored before containment failure, and the amount of core melt "filtering" taking place by such systems as the containment sprays and the suppression pool. The sprays and pool may be actively removing fission products before they are released into the environment.

Restoring AC power following core damage but before containment failure is of value only if the earlier containment failure modes (e.g., early H_2 burns or steam spikes) have not occurred or if the containment has survived such an event. The time then available before later failures such as overpressure is dependent on the containment design. However, even with AC power restored, the possibility of overpressure due to continued noncondensable gas formation or late H_2 burns is still of significant concern, particularly for the smaller containments.

Because of the uncertainties regarding these events, it would appear as though the containment should be conservatively assumed to fail (even with AC power eventually restored) following an extended station blackout event. Ongoing research may eventually show that containment survival is a realistic assumption for some large dry containments. Using these assumptions, the major effect on risk then becomes whether the containment fails early or late. Table 7 summarizes for each containment design the information provided above.

Containment venting designs are receiving considerable attention recently, and thus a few words are warranted regarding the ability of venting to reduce the risks from station blackout by avoiding containment failure.

The designs currently being considered are intended to prevent long-term overpressurization of the containment. They are about 1-3 feet in diameter, may or may not have filters, and are, at least for a short time period, independent of AC power requirements.

It would appear that for those containment designs susceptible to early H_2 or steam spike failures, the vent designs being considered would not be adequately sized to reduce the pressure rise fast enough so as to avoid containment failure.

For large volume containments or high design pressure containments, survivability of the containment until long-term overpressurization appears much more likely. Containment vents, particularly with filters, would seem to be of greater value although a trade-off exists as to the reduction of radioactivity released through a filtered vent as opposed to letting the containment survive as long as possible thereby taking advantage of deposition and plateout effects. These comments apply specifically to station blackout and not to other types of accident sequences.

It would therefore appear that containment venting may have some effect at reducing risks from station blackout accidents for those containment designs which will most likely fail due to overpressure. However much more detailed analyses, as is being currently performed in NRC's Filtered Vent Program, is required in order to add credibility to the above conclusion.

Table 7. Containment Failure Insights

Containment Type	Approximate Time to Containment Failure Following Onset of Core Damage	Most Probable Containment Failure Modes
Ice Condenser	1 hr.	Hydrogen burn, steam spike
	2 hrs.	Overpressure
	At or following AC recovery	Hydrogen burn
Subatmospheric or Small Dry	2 hrs.	Hydrogen burn, steam spike
	6-12 hrs.	Overpressure
	Following AC recovery	Hydrogen burn
Large Dry	10 hrs.	Overpressure
	Following AC recovery	Hydrogen burn
Mark I, Mark II	2-4 hrs.	Electrical penetration failure
	4-8 hrs.	Overpressure
Mark III	10-15 hrs.	Overpressure
	1 hr. following AC recovery	Hydrogen burn

6.0 OBSERVATIONS, INSIGHTS, AND SENSITIVITIES

6.1 GENERAL OBSERVATIONS AND INSIGHTS

From the results of this study and particularly from a review of the dominant sequence cutsets, there are a number of general observations and insights which can be made and which apply uniformly to large groups of plants. These are listed below and pertain to those factors which are important to most, if not all, the accident sequences resulting from station blackout for a particular group of plants.

PWRS

1. Core damage probabilities due to system failures in the 2-12 hour time period following station blackout could be just as great if not greater than core damage probabilities due to early system failures following station blackout. This is due to subsequent important AC/DC dependencies in the AFWS or due to the loss of RCS integrity by reactor coolant pump seal failure in the longer time periods.

2. Offsite power loss, diesel generator unavailability and the nonrecovery of either offsite or onsite power are important to virtually every station blackout core damage sequence. Thus, improvements in the reliability and recovery of both these systems has direct impact on the entire core damage probability from all sequences.

3. The major importance of DC power to station blackout sequences is with regard to how long DC power can be maintained before it is depleted without battery charging or otherwise made unavailable due to prolonged loss of AC effects. Maintaining DC power allows for a system's possible, continued, AC-independent operation, provides needed instrumentation for monitoring plant status, provides necessary lighting in vital plant areas, and plays an important role in defining those periods when diesel generator recovery will become very difficult if not virtually impossible due to the DC dependencies of field flashing, etc. Loss of DC power can also somewhat hinder the ease with which offsite AC power can be restored due to the need for local manual closing of breakers.

4. Based on past judgments as well as current judgments by analysts, containment failure by either H_2 burn or overpressure failure seem rather likely although the large dry containment designs in particular may have a reasonable chance of survivability due to their large volumes and high design pressures. Containment failure may even be induced by AC power recovery in some situations (see Section 5.2).

5. Though not analyzed in detail in these analyses, external events could play a sizable role in inducing station blackout or similar acting scenarios (e.g., loss of vital control power) which could then result in severe core damage. (See Appendix J.)

BWRs (with isolation condensers):

1. Core damage probabilities due to failures in the 2-12 hour period could be greater than core damage probabilities due to early system failures particularly for those plants with no AC-independent system capable of providing primary system makeup. This is highly dependent on the recirculation pump seal LOCA probability.

2 & 3. Same as for PWRs.

4. Overpressure failure appears to be the most likely containment failure mode and may happen rather quickly depending on the electrical penetration seal design. (See Section 5.2.)

5. Same as for PWRs.

BWRs (with HPCI-RCIC systems)

1. Core damage probabilities due to system failures in the 2-12 hour time period appear to dominate the overall core damage probability from station blackout accident sequences. This is due primarily to the fact that two AC-independent systems are available for early success of decay heat removal, but both systems suffer from important AC/DC/ventilation dependencies in the later time periods following station blackout.

2 & 3. Same as for PWRs.

4. Same as for BWRs with isolation condensers.

5. Same as for PWRs.

BWRs (with HPCS-RCIC systems)

1. Core damage probabilities due to late system failures in the 2-12 hour time frame could be just as great if not greater than core damage probabilities due to early failures of the HPCS and RCIC systems.

This is due primarily to the subsequent AC/DC/ventilation dependencies suffered by RCIC coupled with early unavailability of the HPCS system. Overall, however, BWRs with this third redundant train of shutdown heat removal (in the form of HPCS and its dedicated AC/DC/support system configuration) appear to have the least susceptible design of all the "base" plant configurations to station blackout.

2 & 3. Same as for PWRs.

4. Plants of this group with Mark II containment designs will respond in a similar way with regard to containment failures as the previous two BWR plant groups have. BWRs with HPCS-RCIC systems with Mark III containment designs are more susceptible to H_2 burn failure as well as eventual overpressure failure of containment. AC restoration could also induce containment failure. (See Section 5.2.)

5. Same as for PWRs.

All Plants Fitting the "Base" Plant Configurations

With the exception of BWRs with HPCS and RCIC systems, core damage probabilities due to station blackout and caused by internal plant system failures can be summarized in the following way for plants which are like the "base" plant configurations of this study. A "best guess" point estimate in the low 1E-5/reactor year range appears to apply for all the "base" configurations while the mean value is approximately 1E-4/reactor year. External event caused loss of AC accident sequences appear to fall in the 1E-4-1E-6/reactor year range or lower depending on the specific plant's susceptibilities to seismic, fire, wind, and other external event phenomena. These are in comparison to the proposed safety goal figure of 1E-4/reactor year for all core damage sequences caused by both internal and external plant failures. (See Appendix F.)

Not all plants fit the "base" plant configurations of this study. Differences in the number of diesel generators and onsite system power trains, in the AC system success criteria, and in shutdown cooling system designs, can all affect the core damage probability and ultimate risks associated with station blackout. These differences are examined by reviewing the specific accident sequence factors which affect each sequence's importance and by performing simple sensitivity analyses which demonstrate the effects of these differences. These topics are discussed in the following section.

6.2 SPECIFIC SEQUENCE OBSERVATIONS, INSIGHTS, & SENSITIVITIES

From the results of this study, Table 8 summarizes by "base" plant design and by dominant accident sequence, those factors most important to making each sequence potentially dominant relative to the overall core damage probability. In light of these factors, only a limited number of important sensitivities need to be performed to determine ways in which the core damage probability and risks from station blackout might be either increased or decreased substantially. These sensitivities are given in Tables 9-11 for PWRs, BWRs with isolation condensers, and BWRs with HPCI-RCIC. Sensitivities were not done on BWRs with HPCS-RCIC since there are only a few of these plants and they all have the same design and AC/DC configuration analyzed in the base case. (Upper and lower bounds on the uncertainty analyses reflect approximate possible ranges of the two sequences in this case.) The sensitivities are done on the point estimates for ease of calculation but proportionate results can be expected for means and medians. Some general conclusions that can be drawn from these sensitivities are: (1) single factors at the system level do not affect all sequences and, therefore, do not, in general, have a large impact on the total core damage probabilities; (2) factors that decrease the initiating event probability affect all sequences, and (3) factors which add AC power, independent makeup capabilities affect all sequences.

Table 8. Summary of Major Factors Affecting Dominant Station Blackout Accident Sequences

"Base" Design	Dominant Sequence	Major Factors Affecting Sequence Probability
PWR w/1 Steam Train AFWS	TML_1B_1 $TML_1Q_1B_1$	AFWS Steam Train unavailability, AC recovery to electric-powered AFWS/MFWS/makeup systems, possible AC dependency for RCS isolation
	TML_2B_2	AFWS-DC-operator interaction, AC recovery to electric-powered AFWS/MFWS/makeup/DC power systems, time of AFWS water source depletion and AC/DC dependencies in alternate water source
	TMQ_2B_2	Large pump seal failure probability, AC recovery to makeup systems, common service water cooling dependencies in AC & makeup systems
BWR w/Isolation Condenser(s)	TMU_1B_1	Condenser(s) unavailability, AC recovery to alternate decay heat removal systems
	TMQ_1B_1	Stuck open relief valve probability, AC recovery to makeup systems
	TMQ_2B_2	Large pump seal failure probability, AC recovery to makeup systems, common service water cooling dependencies in AC & makeup systems

Table 8 (Continued)

BWR w/HPCI-RCIC	TMU_1B_1	HPCI/RCIC unavailability, AC recovery to DC power/ other makeup systems
	TMU_2B_2	HPCI/RCIC-DC/ventilation interactions, AC recovery to DC power/other makeup/ ventilation systems, common service water cooling dependencies in AC/makeup systems & for ventilation of HPCI/RCIC
BWR w/HPCS-RCIC	TMU_1B_1	HPCS/RCIC unavailability, AC recovery to other makeup systems
	TMU_2B_2	HPCS & support systems' unavailability, RCIC-DC/ ventilation interactions, AC recovery to DC power/other makeup/ ventilation systems

TABLE 9

PWR Sensitivity Examples

Item	Value Used	Sensitivity	Point Estimate Effects		
			Sequence	Before*	After*
AFWS STM Train Unavail.	4E-2	1.2E-1	TML_1B_1	6.5-4.0E-6	2.0-1.2E-5
		4E-3			6.5-4.0E-7
		1.2E-1	$\sum CD$	3.5-2.0E-5	5.0-3.0E-5
		4E-3			3.0-1.5E-5
AFWS 2 STM Trains	-	5E-4	TML_1B_1	6.5-4.0E-6	6.5-4.0E-7
			$\sum CD$	3.5-2.0E-5	3.0-1.5E-5
AFWS 1 STM Train and Ded. Indep. Diesel/DC Train	-	1E-2	TML_1B_1	6.5-4.0E-6	Negl.
			TML_2B_2 (Batt. Dep.)	1.5-0.9E-5	Negl.
			TML_2B_2 (Cst Dep.)	3.5E-6	7.0E-6
			$\sum CD$	3.5-2.0E-5	1.5-1.0E-5
Operator Fails to Run AFWS W/O DC	0.5	1.0	TML_2B_2	1.5-0.9E-5	3.0-2.0E-5
		0.1	(Batt. Dep.)		3.0-2.0E-6
		1.0	TMQ_2B_2	1.0E-5	5.0E-6
		0.1	(B&W only)		1.5E-5

*The first value is for Babcock & Wilcox plants and the second value is for Westinghouse and Combustion Engineering Plants. If there is only one value, then it is used for all plants unless otherwise specified.

Table 9 (continued)

PWR Sensitivity Examples

Item	Value Used	Sensitivity	Point Estimate Effects		
			Sequence	Before*	After*
Operator Fails to Run AFWS W/O DC (continued)	0.5	1.0	TML_2B_2 (Cst Dep.)	3.5E-6	Negl.
		0.1			7E-6
		1.0	$\sum CD$	3.5-2.0E-5	4.0-2.5E-5
		0.1			3.0-2.0E-5
Offsite Nonrecovery	See Report	3↑ (after 1 hr.)	TML_1B_1	6.5-4.0E-6	6.5-12.0E-6
		3↓ "			6.5-1.3E-6
		3↑ "	TML_2B_2 (Batt. Dep.)	1.5-0.9E-5	4.5-2.7E-5
		3↓ "			5.0-3.0E-6
		3↑ "	TMQ_2B_2	1.0-0.5E-5	2.3-.55E-5
		3↓ "			5.5-4.8E-6
		3↑ "	TML_2B_2 (Cst Dep.)	3.5E-6	10.5E-6
		3↓ "			1.2E-6
		3↑ "	$\sum CD$	3.5-2.0E-5	8.5-5.5E-5
		3↓ "			1.8-1.0E-5

*The first value is for Babcock & Wilcox plants and the second value is for Westinghouse and Combustion Engineering Plants. If there is only one value, then it is used for all plants unless otherwise specified.

Table 9 (continued)

PWR Sensitivity Examples

Item	Value Used	Sensitivity	Point Estimate Effects		
			Sequence	Before*	After*
Common SW Dependencies	8E-5	Negl.	TML_1B_1	6.5-4.0E-6	5.0-3.0E-6
			TML_2B_2 (Batt. Dep.)	1.5-0.9E-5	1.0-0.7E-5
			TMQ_2B_2	1.0-0.5E-5	5.0E-6 to Negl.
			TML_2B_2 (Cst Dep.)	3.5E-6	3.0E-6
			$\sum CD$	3.5-2.0E-5	3.0-1.5E-5
Addition of AC Independent High Pressure Makeup Train	-	1E-2	(All) $\sum CD$	3.5-2.0E-5	3.5-2.0E-7
Battery Depletion Time	5 hrs.	2 hrs.	TML_2B_2	1.5-0.9E-5	3.0-2.0E-5
		12 hrs.	(Batt. Dep.)		3.0-2.0E-6
		2 hrs.	TMQ_2B_2	1.0E-5	1.5E-5
		12 hrs.	B&W only)		6.0E-6

*The first value is for Babcock & Wilcox plants and the second value is for Westinghouse and Combustion Engineering Plants. If there is only one value, then it is used for all plants unless otherwise specified.

Table 9 (continued)

PWR Sensitivity Examples

Item	Value Used	Sensitivity	Point Estimate Effects		
			Sequence	Before*	After*
Battery Depletion Time (continued)		12 hrs.	TML_2B_2 (Cst Dep.)	3.5E-6	7.0E-6
		2 hrs.	$\sum CD$	3.5-2.0E-5	5.5-3.0E-5
		12 hrs.			2.0E-5
Seal Leak Time	0.5@	1.0@	TMQ_2B_2	1.0-0.5E-5	4.5-1.5E-5
	8-12 hrs.	2 hrs.	$\sum CD$	3.5-2.0E-5	7.0-3.0E-5
Blackout Probability	2E-4	2E-3	(All) $\sum CD$	3.5-2.0E-5	3.5-2.0E-4
		1E-5			2.0-1.0E-6
AFWS, Batt. Dep. Time, Seal Leak Time, Cst Dep. Time	4E-2, 5 hrs., 0.5@ 8-12 hrs., 8 hrs.	4E-3, 12 hrs., 1 day, 1 day	TML_1B_1	6.5-4.0E-6	6.5-4.0E-7
			TML_2B_2 (Batt. Dep.)	1.5-0.9E-5	3.0-2.0E-6
			TMQ_2B_2	1.0-0.5E-5	Negl.
			TML_2B_2 (Cst Dep.)	3.5E-6	Negl.
			$\sum CD$	3.5-2.0E-5	3.5-2.5E-6

*The first value is for Babcock & Wilcox plants and the second value is for Westinghouse and Combustion Engineering Plants. If there is only one value, then it is used for all plants unless otherwise specified.

Table 10

BWR W/Isolation Condenser Sensitivity Examples

Item	Value Used	Sensitivity	Point Estimate Effects		
			Sequence	Before	After
Operator Failure to Initiate Shell Side Water	5E-3	5E-2	TMU_1B_1	1.5E-6	6.0E-6
		1E-3			1.0E-6
		5E-2	$\sum CD$	2.5E-5	3.0E-5
		1E-3			2.5E-5
Add Firepump for RCS Makeup	-	5E-2	(All) $\sum CD$	2.5E-5	1.5E-6
Blackout Probability	2E-4	2E-3	(All) $\sum CD$	2.5E-5	2.5E-4
		1E-5			1.5E-6
Offsite Non-Recovery	See Report	3↑ (after 1 hr.)	TMU_1B_1	1.5E-6	4.5E-6
		3↓ "			5.0E-7
		3↑ "	TMQ_2B_2	2.0E-5	6.0E-5
		3↓ "			7.0E-6
		3↑ "	$\sum CD$	2.5E-5	6.5E-5
		3↓ "			1.0E-5
Condenser Unavailability (T&M)	2E-3	1.0 (Allowed if plant operates @40% power)	TMU_1B_1	1.5E-6	5E-5
			$\sum CD$	2.5E-5	7E-5

Table 10 (continued)

BWR W/Isolation Condenser Sensitivity Examples

Item	Value Used	Sensitivity	Point Estimate Effects		
			Sequence	Before	After
Stuck Open SRV Probability	1.6E-2	2E-3	TMQ_1B_1	2.5E-6	3.0E-7
			$\sum CD$	2.5E-5	2.2E-5
Common SW Dependencies	8E-5	Negl.	(All) $\sum CD$	2.5E-5	1.5E-5
Seal Leak Time	1.0 @ 12 hrs.	1.0@ 2 hrs.	TMQ_2B_2	2.0E-5	6.0E-5
		Negl.			Negl
		1.0 @ 2hrs.	$\sum CD$	2.5E-5	6.5E-5
		Negl.			5.0E-6
Battery Depletion Time	5 hrs.	2 hrs.	TMQ_2B_2	2.0E-5	3.0E-5
		12 hrs.			1.5E-5
		2 hrs.	$\sum CD$	2.5E-5	3.5E-5
		12 hrs.			2.0E-5
Operator Fails to Run Fire-pump/Isolation Condenser After Loss of DC in 5 hrs.	Negl.	1.0	TMU_2B_2	Negl.	1.0E-5
			$\sum CD$	2.5E-5	3.5E-5

Table 11

BWR W/HPCI-RCIC Sensitivity Examples

Item	Value Used	Sensitivity	Point Estimate Effects		
			Sequence	Before	After
Operator Fails to Run HPCI-RCIC W/O DC/Ventilation	0.5	1.0	TMU_2B_2	2.5E-5	3.0E-5
		0.1			2.0E-5
		1.0	$\sum CD$	2.5E-5	3.0E-5
		0.1			2.0E-5
HPCI-RCIC Runs W/O Ventilation/DC	5-8 hrs.	12 hrs.	TMU_2B_2	2.5E-5	1.0E-5
			$\sum CD$	2.5E-5	1.0E-5
Blackout Probability	2E-4	2E-3	$\sum CD$	2.5E-5	2.5E-4
		1E-5			1.5E-6
Offsite Nonrecovery	See Report	3↑ (after 1 hr.)	TMU_2B_2	2.5E-5	5.5E-5
		3↓ "			1.5E-5
		3↑ "	$\sum CD$	2.5E-5	5.5E-5
		3↓ "			1.5E-5
Operator Fails to Override Temp. Isolation Signal on HPCI/RCIC	1.0	Negl.	TMU_2B_2	2.5E-5	2.0E-5
			$\sum CD$	2.5E-5	2.0E-5

Table 11 (continued)

BWR W/HPCI-RCIC Sensitivity Examples

Item	Value Used	Sensitivity	Point Estimate Effects		
			Sequence	Before	After
Common SW Dependencies	8E-5	Negl.	TMU_2B_2	2.5E-5	1.5E-5
			$\sum CD$	2.5E-5	1.5E-5
Battery Depletion Time	5 hrs.	2 hrs.	TMU_2B_2	2.5E-5	2.5E-5
		12 hrs.			2.0E-5
		2 hrs.	$\sum CD$	2.5E-5	2.5E-5
		12 hrs.			2.0E-5
Early Common Mode DC Failure	1E-5	1E-4	TMU_1B_1	1.0E-6	6.5E-6
		1E-6			4.0E-7
		1E-6	$\sum CD$	2.5E-5	3.0E-5
		1E-6			2.5E-5

Appendix A

Event Trees

Figures		Page
A-1	Generic PWR Event Tree for Station Blackout.....	77
A-2	Generic BWR Event Tree for Station Blackout (BWR2-BWR3).....	78
A-3	Generic BWR Event Tree for Station Blackout (BWR3-BWR6).....	79

Tables		
A-1	Station Blackout Effects.....	80
A-2	Summary of Event Tree Heading Descriptions.....	81

This appendix contains details regarding the event trees used in the station blackout study. The three event trees are depicted along with descriptions of the event tree headings and the sequences themselves. Rationale for the particular event tree construction is also presented.

In developing the event trees for this study, a number of considerations had to be kept in mind: 1) The possibility of a long duration station blackout and the fact that different time-dependent system failure modes can also occur following the intiating event. This latter possibility led us to consider constructing time-dependent event trees so as to more explicitly examine and display the effects of long-term station blackout. 2) Since the scope of the program covers virtually all present plant configurations and types, the desire for a few functional trees rather than numerous systemic trees developed. 3) All the major functions important to possible core damage resulting from station blackout must be shown.

In analyzing the station blackout issue, it appears that three time periods and two principal functions are of interest. The two principal functions (given a reactor scram does occur) are (1) Heat removal from the Reactor Coolant System (RCS) to the ultimate heat sink. (2) Maintaining water inventory in the RCS in order to keep the reactor core covered.

The three time periods consist of:

(A) an early time phase for recovery of AC power so as to avoid possible core damage;

(B) The time period in which DC power supplies could be depleted and subsequent system failures could occur due to continued unavailability of AC power; and

(C) A late time period in order to include long term considerations. This is valid only and if there have been no early system failures, and if it is recognized that systems are typically not designed to run for long periods of time without water supplies, heat sinks, and AC and DC power.

The early time phase is typically ~1/2 to 2 hours long [31, 34] for sequences which include early failure of either or both principal functions. In this length of time, AC power recovery is a vital factor in mitigating the event.

The second time period is currently estimated in the 2 to 12 hour [31, 34] time frame (although it can be longer). In this time, the two principal functions can be lost due to the extended loss of AC power. Such losses can occur, for example, due to depletion of DC power supplies caused by loads on the batteries for extended periods of time without AC power for the chargers,

loss of RCS pump seals (a blackout-caused LOCA) due to the continuous loss of AC power and therefore, loss of seal cooling, and the failure of either or both principal functions due to extended cooling or lubrication losses.

The late time period includes consideration of the slow depletion of nominal water inventories and heat sink capability due to extended AC power loss given the core has not been damaged in earlier time frames. Long-term considerations include not only the continuous performance of the two principal functions but also the success or failure of containment systems which in turn affect the consequences of the accident.

The event trees are therefore constructed in a manner which explicitly depicts the three time periods of interest and the success or failure of the two principal functions during each time period. The trees include sequences that either lead to possible core damage or result in mitigation of the accident. The unavailability of the containment systems are not explicitly shown on the event trees, but containment considerations are included in the overall analyses to provide a risk perspective. (See Section 5.2 of main report.)

The generic event trees are shown in Figures A-1, A-2, and A-3. The reason for three event trees becomes clear if one reviews the overall effects of station blackout on the various plant designs. Table A-1 summarizes those effects on a functional level. Principal system level effects are shown in parentheses. Functionally, the older BWRs and all PWRs are similarly affected, and so the two event trees (Figures A-1 and A-2) are identical in structure, but of course the functions are represented by different systems and, therefore, different accident sequence probabilities could result. The newer BWRs have different functional capabilities and require a unique event tree structure to display the possible accident sequences (Figure A-3).

Depending on the specific design, each heading on the trees can represent a different system or group of systems. The capability does exist, however, to account for these various designs in the analysis process. This can be done by analyzing the trees using different failure probabilities for each event, depending on the system designs of interest for each class of plant type to be considered. Thus, the trees can be analyzed, for instance, using the appropriate systems for each functional event heading for a BWR-3 design, and then using a BWR-6 design in which different systems may represent each functional heading on the event tree. Given this capability and the functional nature of these generic event trees, the spectrum of plant designs can be analyzed using the event trees shown.

Although, as mentioned earlier, each event tree heading can represent different systems depending on plant design, general systemic descriptions for each event heading can be defined.

Figure A-1 GENERIC PWR EVENT TREE FOR STATION BLACKOUT

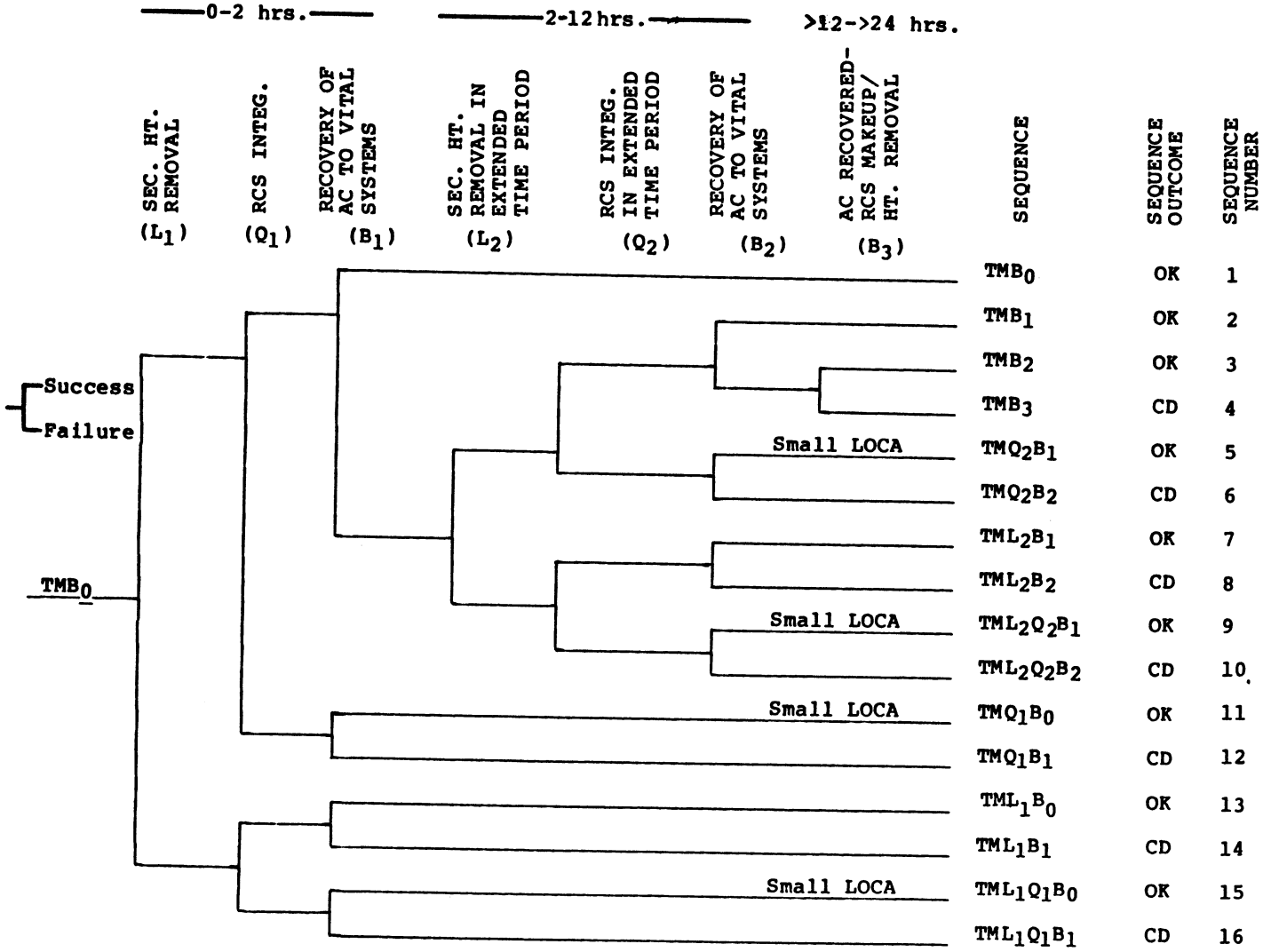

Figure A-2. GENERIC BWR EVENT TREE FOR STATION BLACKOUT (BWR2 - BWR3)

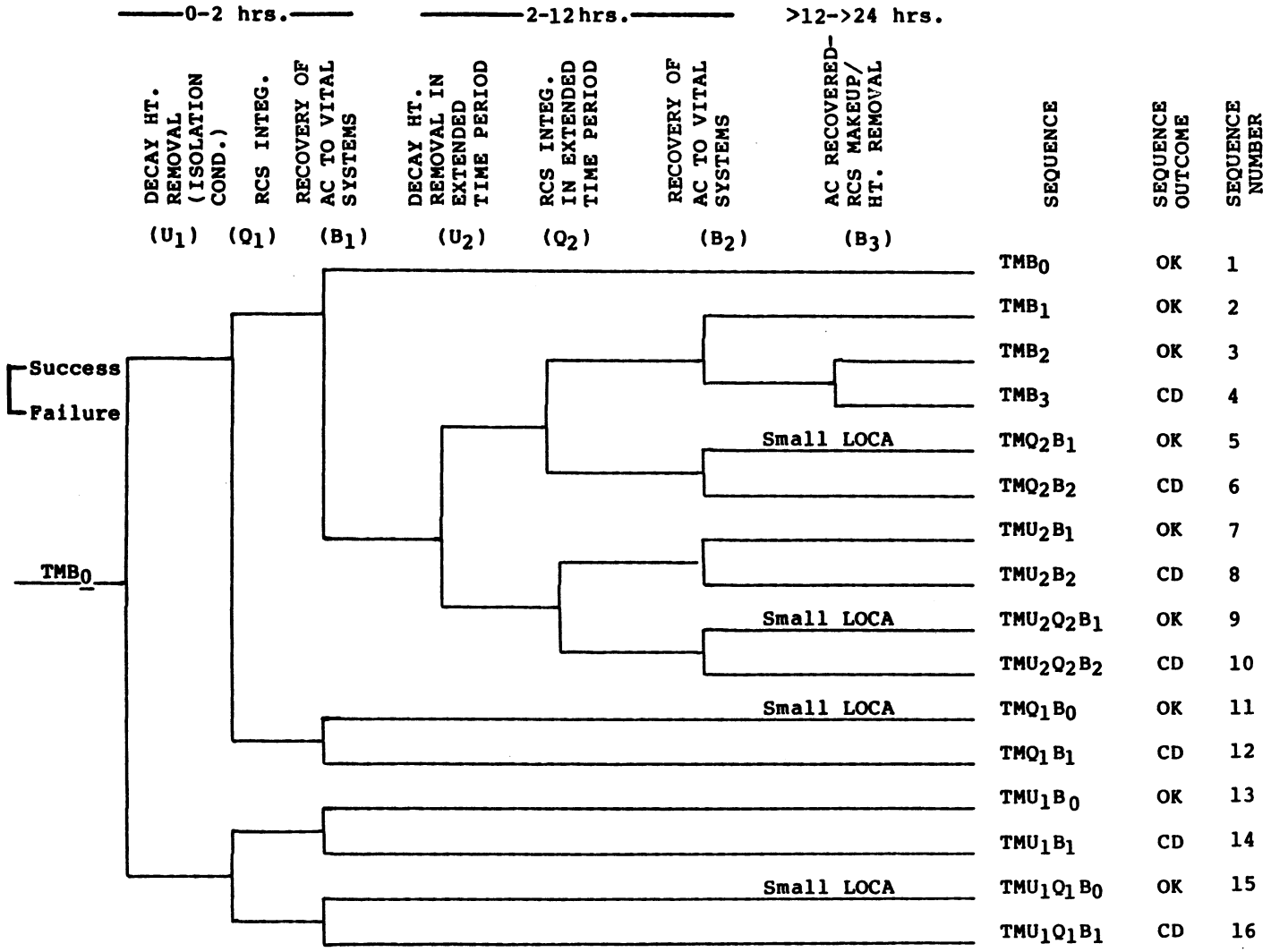

Figure A-3. GENERIC BWR EVENT TREE FOR STATION BLACKOUT (BWR3 - BWR6)

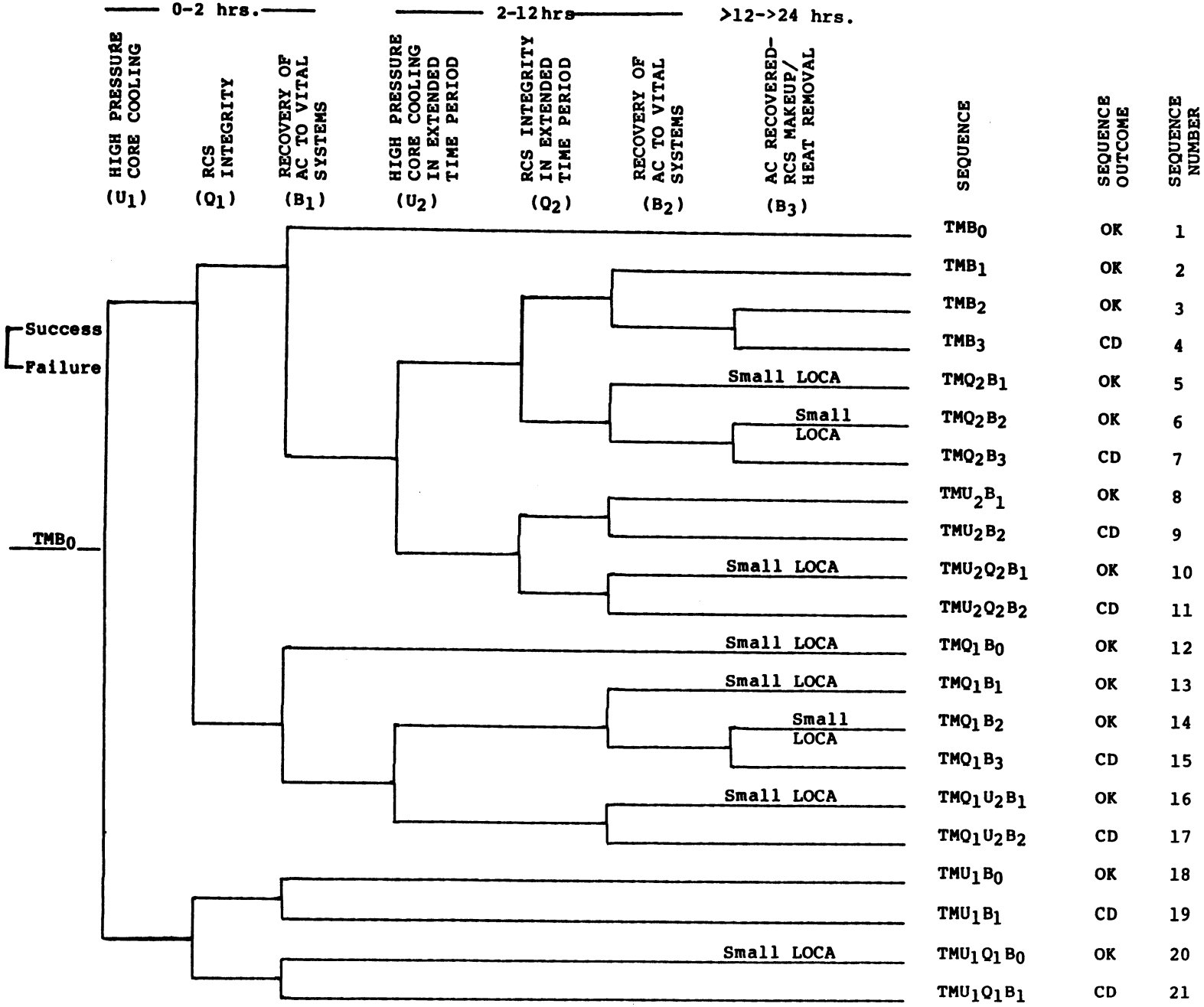

TABLE A-1

STATION BLACKOUT EFFECTS

	FUNCTIONS REMAINING	FUNCTIONS LOST
PWRs:	DECAY HEAT REMOVAL (STEAM-DRIVEN AFWS)	RCS MAKEUP (HPIS)
BWRs (2-3):	DECAY HEAT REMOVAL (ISOLATION CONDENSER)	RCS MAKEUP[1] (LPCS/LPCI[2])[3]
BWRs (3-6):	INTERIM HEAT REMOVAL & RCS MAKEUP (HPCI OR HPCS/RCIC)	ULTIMATE HEAT REMOVAL (LPCRS)[3]

[1] A FEW PLANTS HAVE AN HPCI SYSTEM THAT PROVIDES MAKEUP AS WELL.
[2] LPCI EXISTS ONLY ON SOME BWR-3 DESIGNS.
[3] WOULD REQUIRE SUCCESSFUL APRS/ADS OPERATION TO DEPRESSURIZE THE PRIMARY SYSTEM.

TABLE A-2. SUMMARY OF EVENT TREE HEADING DESCRIPTIONS (ACCIDENT SEQUENCE SYMBOLS)

TMB_0	- STATION BLACKOUT (THE INITIATING EVENT)
L_1	- AC-INDEPENDENT SECONDARY HEAT REMOVAL (i.e., STEAM-DRIVEN AFWS OR EFWS) INITIALLY SUCCEEDS OR FAILS FOLLOWING STATION BLACKOUT
U_1	- AC-INDEPENDENT HEAT REMOVAL (i.e., ISOLATION CONDENSER FOR BWR 2-3; HPCI OR HPCS/RCIC FOR BWR 3-6) INITIALLY SUCCEEDS OR FAILS FOLLOWING STATION BLACKOUT
Q_1	- PILOT-OPERATED RELIEF VALVE (PORV)/SAFETY-RELIEF VALVE (SRV)/PUMP SEAL LEAKS/RCS ISOLATION SUCCEED OR FAIL FOLLOWING THE INITIATING EVENT SUCH THAT THE RCS INTEGRITY (AND HENCE PRIMARY COOLANT INVENTORY) IS EITHER MAINTAINED OR IS LOST
$B_1/B_2/B_3$	- OFFSITE PWR/ONSITE PWR IS OR IS NOT RESTORED IN THE THREE CORRESPONDING TIME PERIODS OF INTEREST & SUFFICIENT AC HEAT REMOVAL/MAKEUP SYSTEMS & THEIR SUPPORT SYSTEMS EITHER SUCCEED OR FAIL TO OPERATE FOR AS LONG AS NECESSARY TO ACHIEVE AND/OR MAINTAIN LONG-TERM SAFE SHUTDOWN (CAN GO TO COLD SHUTDOWN)
L_2	- SAME AS L_1, BUT INCLUDING PROLONGED AC LOSS EFFECTS (e.g., COOLING, VENTILATION, DC PWR LOSS EFFECTS ON THE CONTINUED SUCCESSFUL OPERATION OF L_1 SYSTEMS)
U_2	- SAME AS U_1, BUT INCLUDING SIMILAR PROLONGED AC LOSS EFFECTS
Q_2	- PORV/SRV/SEAL LEAKS - LIKE Q_1 EXCEPT EMPHASIS ON PROLONGED AC LOSS EFFECTS ON THE CONTINUED SUCCESS OF MAINTAINING RCS INTEGRITY

These descriptions are presented below. A summary of the event tree heading descriptions is provided in Table A-2.

PWR Event Tree (Figure A-1)

a) Secondary Heat Removal (L_1) -- Given station blackout (TMB_0) which will result in the unavailability of the MFWS, this event includes any system and its supporting systems which are used to provide decay heat removal from the secondary side of the steam generators given AC power and the loss of MFWS. This function is typically performed by the AFWS in PWRs. For success of this event, the AFWS must be AC independent or require AC power only after sustained periods of operation such as for pump room cooling or switching to an alternate water supply.

   Success of this event is defined as follows: The AFWS removes enough heat so that the RCS does not overheat and boiloff. This prevents the uncovering of the reactor core in the early time frame.

b) RCS Integrity (Q_1) -- This event involves preventing a leak in the RCS pressure boundary. This function includes such considerations as reclosing the Safety-Relief Valves (SRVs) or PORVs following their operation, isolation of appropriate lines connecting to the RCS, and the loss of the RCS pressure boundary due to mechanical degradation of the RCS pump seal following loss of AC power.

   Success of the event is defined as follows: Leakage from the primary system is sufficiently low to prevent the need for makeup of water inventory during the early phase of the accident scenario.

c) AC to Vital Systems (B_1) -- This event includes the recovery of AC power to any of the secondary heat removal systems and/or the makeup systems so that the heat removal and RCS water inventory functions can be established and maintained. This event also includes restoration of AC power to support systems to allow for the success of the two principal functions (core cooling and coolant makeup). The secondary heat removal and makeup systems commonly consist of the AFWS, the MFWS if offsite power is restored, the High Pressure Injection System (HPIS), and/or the Chemical and Volume Control System (CVCS). The support systems include ventilation, cooling, and lubrication systems as well as systems which provide for long-term recirculation of needed water supplies. If the AFWS and the MFWS were still unavailable following AC power restoration, some plants could possibly operate in a "feed and bleed" mode in which high pressure makeup systems are used both to maintain RCS water inventory and remove heat from the primary system to the containment via the PORVs and/or SRVs.

Success is defined as as follows: The restoration of AC power to a sufficient set of the above systems and their supporting systems necessary for continued RCS heat removal and makeup for as long as needed (about 24 hours). Success or failure of this event is only of concern if either of the previous two events has failed. If they have failed early recovery of AC power will be required in order to avoid core damage.

d) Secondary Heat Removal in Extended Time Period (L_2) -- This event includes continued operation of secondary heat removal if AC power has not been restored earlier (B_1 time frame).

Continued operability of the secondary heat removal function is dependent upon the varying electrical power configurations after a blackout. If AC power has not been restored but DC power is successful, then failure of the secondary heat removal function due to extended loss of pump cooling and lubrication or room cooling may occur. If both AC and DC power have failed, then it is likely that the operator cannot continue to operate the systems "flying blind." Thus, the extended loss of AC power perhaps worsened by the eventual loss of DC power could prevent operation of these systems and, therefore, eventually fail the heat removal function.

Success is defined as follows: Effects due to the extended loss of AC power coupled with possible loss of the DC power supplies do not affect the continued success of secondary heat removal (i.e., either the operator successfully operates the systems without AC and DC power or DC power does not fail and the systems cooling requirements are AC independent).

e) RCS Integrity in Extended Time Period (Q_2) -- This event is similar to the previous event except that it includes the effect on continued success of the RCS integrity function if AC power has not been restored earlier. Considerations include the effects of continued AC power loss (and perhaps DC power loss) on the ability to maintain RCS integrity. For instance, one item of concern is the ability of the RCS pump seals to maintain their integrity during extended loss of seal cooling.

Success is defined as follows: The effects due to extended loss of AC power coupled with eventual DC power loss do not affect the integrity of the RCS in such a way that makeup capability becomes an immediate concern.

f) AC to Vital Systems (B_2) -- This event includes success or failure of recovering AC power to necessary systems (see B_1 event) particularly when either the L_2, Q_2, or both events have failed, thus requiring AC power

restoration relatively quickly (within a few hours) in order to restore or mitigate the effects of the failed function.

Success is defined as the restoration of AC power to a sufficient set of systems which will restore the failed function or its effects and bring the plant to a safe and stable condition.

g) AC Recovered-RCS Makeup/Heat Removal (B_3) -- Given: secondary heat removal and integrity of the RCS have succeeded even without the recovery of AC power. This event is concerned with eventual AC recovery so that these functions and long term makeup can be reestablished if necessary and maintained for as long as needed. As in the earlier cases covering AC restoration, this event includes restoration of power to the systems themselves and proper operation of these systems. The systems include long-term makeup systems as well as all supporting systems necessary for long-term success of heat removal and for maintaining RCS coolant inventory. Without such a recovery, eventual core damage will occur.

Success for this event occurs when AC power (and if needed, DC power, if it has been previously lost) is restored to long-term makeup and heat removal systems. This includes all necessary support systems, so that the two principal functions can succeed for as long as required.

<u>BWR Event Tree for Isolation Condenser Designs</u> (Figure A-2)

a) Decay Heat Removal (U_1) -- Given station blackout (TMB_0), this event includes any system and its support systems which provide decay heat removal immediately following loss of AC power and loss of the MFWS/PCS. For success of this event, the systems must be AC independent or require AC power only after sustained periods of operation. For BWR-2s, and some BWR-3s, this event includes the isolation condenser for heat removal and for some plants, the HPCI system for heat removal and reactor vessel water makeup.

Success occurs when adequate heat removal is maintained so that the RCS does not overheat and boil-off. This prevents the uncovering of the reactor core in the early time frame.

b) RCS Integrity (Q_1) -- This event involves preserving the integrity of the RCS pressure boundary. This function includes such considerations as reclosing of the SRVs following their operation, isolation of appropriate lines connecting to the RCS, and loss of the RCS pressure boundary due to mechanical degradation of the recirculation pump seals caused by the loss of AC power.

Success occurs when leakage from the primary system is sufficiently low so as to prevent the need for makeup of water inventory during the early phase of the accident scenario.

c) AC to Vital Systems (B_1) -- This event includes success or failure of recovering AC power to the PCS or low-pressure heat removal and makeup systems and their support systems so that heat removal and RCS water inventory can be established and maintained. Besides the PCS, the heat removal and makeup systems include some form of LPCS and/or LPCI system for all BWRs, the FWCI system for three BWR plants, primary system depressurization capability, and some form of Residual Heat Removal (RHR) or Shutdown Cooling (SDC) system combined with containment cooling capability. The support systems include ventilation, cooling, and lubrication systems as well as systems which provide for long-term recirculation of needed water supplies.

Success is defined as restoration of AC power to a sufficient set of the above systems and their supporting systems necessary for continued RCS heat removal and makeup for as long as needed. Success or failure of this event is only of concern if either of the previous two events has failed, thus requiring early recovery of AC power in order to avoid core damage.

d) Decay Heat Removal in Extended Time Period (U_2) -This event includes continued operation of heat removal if AC power has not been restored earlier (B_1 time frame).

Continued operability of the secondary heat removal function is dependent upon the electrical power configurations after blackout. If AC power has not been restored but DC power is successful, then failure of the secondary heat removal function due to extended loss of pump cooling and lubrication or room cooling may occur. If both AC and DC power have failed, then it is likely that the operator cannot continue to operate the systems "flying blind." Thus, the extended loss of DC power perhaps worsened by the eventual loss of DC power could prevent operation of these systems, and, therefore, eventually fail the heat removal function.

Success occurs when effects due to the extended loss of AC power coupled with possible loss of the DC power supplies do not affect the continued success of the heat removal systems.

e) RCS Integrity in Extended Time Period (Q_2) -- This event is similar to the previous event except that it includes the effect on continued success of the RCS integrity function if AC power has not been restored earlier. Considerations include the effects of continued AC power

loss, and perhaps DC power loss, on the ability to maintain RCS integrity.

Success occurs when the extended loss of AC power coupled with eventual DC power loss does not affect the integrity of the RCS so that makeup capability never becomes an immediate concern.

f) AC to Vital Systems (B_2) -- This event includes success or failure of recovering AC power to necessary systems (see B_1 event), particularly when either the U_2, Q_2, or both events have failed thus causing the need for AC power restoration relatively quickly (within a few hours) in order to restore or mitigate the effects of the failed function.

Success is defined as restoration of AC power to a sufficient set of systems to restore the failed function or its effects and bring the plant to a safe and stable condition.

g) AC Recovered-RCS Makeup/Heat Removal (B_3) -- Given: heat removal and integrity of the RCS have succeeded even without the recovery of AC power. This event is concerned with eventual AC recovery so that long-term heat removal and makeup can be established and maintained for as long as needed. As in the earlier cases covering AC restoration, this event includes restoration of power to the systems themselves and proper operation of these systems. The systems include the long-term heat removal and makeup systems previously described in "a" and in "c" above and all supporting systems necessary for long-term success of heat removal and for maintaining RCS coolant inventory.

Success occurs when AC power (and if needed, DC power, if it has been previously lost) is restored to long-term makeup and heat removal systems. This includes all necessary support systems, so that the two principal functions can succeed for as long as required.

<u>BWR Event Tree for Non-Isolation Condenser Designs</u> (Figure A-3)

a) High Pressure Core Cooling (U_1) -- Given: station blackout (TMB_0), this event includes any system and its support systems which provide high pressure core cooling immediately following loss of AC power and loss of the MFWS. This cooling is performed by the HPCI, HPCS, or RCIC systems in BWR-3 through BWR-6 plants without isolation condensers. These systems provide both heat removal and RCS makeup functions and are independent of AC power for at least short term considerations. (Note: HPCS has a dedicated AC supply.)

Success occurs when adequate heat removal and vessel water makeup are provided so that the reactor core is not uncovered during the early time frame.

b) RCS Integrity (Q_1) -- This event involves preserving the integrity of the RCS pressure boundary. This function includes such considerations as reclosing of the SRVs following their operation, isolation of appropriate lines connecting to the RCS, and loss of the RCS pressure boundary due to mechanical degradation of the recirculation pump seals caused by the loss of AC power.

Success occurs when leakage from the primary system is sufficiently low so as to prevent the need for makeup of water inventory during the early phase of the accident scenario.

c) AC to Vital Systems (B_1) -- This event includes success or failure of recovering AC power to the high pressure core cooling support systems, the PCS, or the low pressure heat removal and makeup systems, and their support systems so that heat removal and RCS water inventory can be maintained. Besides the PCS, the heat removal and makeup systems include some form of LPCS and LPCI, primary system depressurization capability, and some form of RHR combined with containment cooling capability. The support systems include ventilation, cooling, and lubrication systems as well as systems which provide for long-term recirculation of needed water supplies.

Success is defined as restoration of AC power to a sufficient set of the above systems and their supporting systems necessary for continued RCS heat removal and makeup for as long as needed. Success or failure of this event is only of concern if either of the previous two events has failed, thus requiring early recovery of AC power in order to avoid core damage.

d) High Pressure Core Cooling in Extended Time Period (U_2) -- This event includes continued operation of the high pressure core cooling systems if AC power has not been restored earlier (B_1 time frame).

Continued operability of the secondary heat removal function is dependent upon the electrical power configurations after a blackout. If AC power has not been restored but DC power is successful, then failure of the secondary heat removal function due to extended loss of pump cooling and lubrication or room cooling may occur. If both AC and DC power have failed, then it is likely that the operator cannot continue to operate the systems "flying blind." Thus, the extended loss of AC power perhaps worsened by the eventual loss of DC power could prevent

operation of these systems and, therefore, eventually fail the heat removal function.

Success occurs when effects due to the extended loss of AC power coupled with possible loss of the DC power supplies does not affect the continued success of these systems.

e) RCS Integrity in Extended Time Period (Q_2) -- This event is similar to the previous event except that it includes the effect on continued success of the RCS integrity function if AC power has not been restored earlier. Considerations include the effects of continued AC power loss, and perhaps DC power loss, on the ability to maintain RCS integrity.

Success occurs when the extended loss of AC power coupled with eventual DC power loss does not affect the integrity of the RCS so that makeup capability never becomes an immediate concern.

f) AC to Vital Systems (B_2) -- This event includes success or failure of recovering AC power to necessary systems (see B_1 event), particularly when the U_2 event has failed thus causing the need for AC power restoration relatively quickly (within a few hours) in order to restore or mitigate the effects of the failed systems.

Success is defined as restoration of AC power to a sufficient set of systems to restore the failed function or its effects and bring the plant to a safe and stable condition.

g) AC Recovered-RCS Makeup/Heat Removal (B_3) -- Given: heat removal and integrity of the RCS have succeeded even without the recovery of AC power. This event is concerned with eventual AC recovery so that long-term heat removal and makeup can be established and maintained for as long as needed. As in the earlier cases covering AC restoration, this event includes restoration of power to the systems themselves and proper operation of these systems. These systems include the long-term heat removal and makeup systems previously described in "a" and "c" above and all supporting systems necessary for long-term success of heat removal and for maintaining RCS coolant inventory.

Success for this event occurs when AC power (and if needed, DC power, if it has been previously lost) is restored to long-term makeup and heat removal systems. This includes all necessary support systems, so that the two principal functions can succeed for as long as required.

One very important general note regarding the specific system success criteria should be mentioned. Based on what is viewed as attempts to define realistic success criteria as expressed particularly in later PRAs[4-14] as well as current judgments regarding success criteria information, it was concluded that in no case (for station blackout related scenarios) is more than one train of a shutdown cooling system needed to provide a necessary function. For example, one train of AFWS and one train of HPIS were concluded to be sufficient to provide heat removal and RCS makeup, respectively, even with the possible station blackout induced LOCAs which could occur. Typical large LOCA criteria requiring multiple trains does not appear to be required in any scenario examined in this study. A possible exception to this is if AC power and the required function are not recovered until the core is nearly or even partially uncovered and core damage is imminent. At such a time, starting more trains of a particular system may be desirable although such action does introduce questions regarding thermal shock phenomena. Since report results found that recovery of AC power itself is such an overwhelming factor in recovering from station blackout, this exception does not appear to significantly change any observations in this report.

With the event tree headings having been described, the following are brief descriptions of the accident sequences depicted on the PWR and BWR event trees. The reader should reference the sequence number on the event trees when reviewing the descriptions that follow.

PWR Event Tree (Figure A-1)

a) Sequence 1 -- Secondary heat removal and the RCS integrity functions succeed immediately following the blackout condition which precludes the need for early recovery of AC power to restore the makeup systems. Also, AC power is eventually restored to the RCS coolant makeup and other supporting systems for the continued successful operation of secondary heat removal and long-term makeup systems. Furthermore, there is never a loss of any necessary function and AC is recovered before DC power supplies are depleted or otherwise lost.

b) Sequences 2 through 4 -- In these sequences, an extended AC power loss occurs causing the possible loss of DC power because of the depletion of DC power supplies. Other effects of a prolonged AC power outage may occur. However, there is no failure of either secondary heat removal or RCS integrity due to this extended loss or due to operator error, and AC power is either finally restored (along with DC power if necessary) to prevent core damage, or AC power is not restored in time to prevent loss of

water inventory and/or heat removal which eventually leads to core damage.

c) Sequences 5 through 10 -- These sequences depict the success or failure of the late restoration of AC power to systems needed to restore or mitigate the effects of secondary heat removal or RCS integrity loss during the intermediate time frame.

d) Sequences 11 through 16 -- Because of the early failure of either the RCS integrity function or the secondary heat removal function or both, early recovery of AC power for the restoration of makeup and/or cooling capability is required. Success or failure of this recovery results in either a mitigated sequence or a sequence in which core damage occurs in the early phase of the accident.

For all sequences resulting in core damage, one other AC recovery consideration is addressed. Eventual AC recovery to the containment systems (but after the onset of core damage) may dictate the success or failure of containment integrity which can thus affect the risks from the accident. This additional time consideration is included in the program analyses but is not explicitly shown on the event trees.

<u>BWR Event Tree for Isolation Condenser Design</u> (Figure A-2)

a) Sequence 1 -- High pressure heat removal, and if applicable, high pressure makeup, and the RCS integrity functions succeed immediately following the blackout condition which precludes the need for early recovery of AC power to restore low pressure heat removal/makeup systems. Also, AC power is eventually restored to the low pressure makeup and heat removal systems and their supporting systems for the continued successful operation of heat removal and long-term makeup. Furthermore, there is never a loss of any necessary function and AC is recovered before DC power supplies are depleted or otherwise lost.

b) Sequences 2 through 4 -- In these sequences, an extended AC power loss occurs causing the possible loss of DC power because of the depletion of DC power supplies. Other effects of a prolonged AC power outage may occur. However, there is no failure of either heat removal or RCS integrity due to this extended loss or due to operator error, and AC power is either finally restored (along with DC power if necessary) to the low pressure systems to prevent core damage, or AC power is not restored in time to prevent loss of water inventory and/or heat removal which eventually leads to core damage.

c) Sequences 5 through 10 -- These sequences depict the success or failure of the late restoration of AC power to low pressure systems. These systems are needed to restore or mitigate the effects of heat removal or RCS integrity loss during the intermediate time frame.

d) Sequences 11 through 16 -- Because of the early failure of either the RCS integrity function or the heat removal function or both, early recovery of AC power for the restoration of makeup and/or cooling capability is required. Success or failure of this recovery results in either a mitigated sequence or a sequence in which core damage occurs in the early phase of the accident.

For all sequences resulting in core damage, one other AC recovery consideration is addressed. Eventual AC recovery to the containment systems (but after the onset of core damage) may dictate the success or failure of containment integrity which can thus affect the risks from the accident. This additional time consideration is included in the program analyses but is not explicitly shown on the event trees.

<u>BWR Event Tree for Non-Isolation Condenser Designs</u> (Figure A-3)

a) Sequence 1 -- High pressure core cooling and the RCS integrity functions succeed immediately following the blackout condition which precludes the need for early recovery of AC power to restore low pressure heat removal/ makeup systems. Also, AC power is eventually restored for the continued successful operation of heat removal and long-term makeup. Furthermore, there is never a loss of any necessary function and AC is recovered before DC power supplies are depleted or otherwise lost.

b) Sequences 2 through 4 -- In these sequences, an extended AC power loss occurs causing the possible loss of DC power because of the depletion of DC power supplies. Other effects of a prolonged AC power outage may occur. However, there is no failure of either high pressure core cooling or RCS integrity due to this extended loss or due to operator error, and AC power is either finally restored (along with DC power if necessary) to prevent core damage, or AC power is not restored in time to prevent loss of water inventory and/or heat removal which eventually leads to core damage.

c) Sequences 5 through 11 -- These sequences depict the success or failure of the late restoration of AC power to systems needed to restore or mitigate the effects of heat removal or RCS integrity loss which have occurred during the intermediate time frame due to the extended loss of AC power.

d) Sequences 12 through 17 -- Because of the early failure of the RCS integrity function and later success or failure of high pressure core cooling, eventual recovery of AC power for the continuation or restoration of makeup and/or cooling capability is required. Success or failure of this recovery results in either a mitigated sequence or a sequence in which core damage occurs in the later stages of the accident.

e) Sequences 18 through 21 -- Because of early failure of the high pressure core cooling systems coupled with possible failure of RCS integrity, early recovery of AC power for the restoration of makeup and/or cooling capability is required. Success or failure of this recovery results in either a mitigated sequence or a sequence in which core damage occurs in the early phase of the accident.

For all sequences resulting in core damage, one other AC recovery consideration is addressed. Eventual AC recovery to the containment systems (but after the onset of core damage) may dictate the success or failure of containment integrity. This recovery can thus affect the risks from the accident. This additional time consideration is included in the program analyses but is not explicitly shown on the event trees.

Appendix B

Shutdown Cooling Systems' Configurations
and Review Process Description

Table of Contents

	Page
Introduction	96
A. System Review Process	96
B. PWR Systems	104
1. Main Feedwater	104
2. Auxiliary Feedwater	104
3. Reactor Coolant Systems Integrity	110
4. High Pressure Makeup	115
5. Support Systems	126
C. BWR Systems	128
1. Power Conversion System	128
2. Reactor Coolant System Integrity	128
3. Emergency High Pressure Injection	132
4. Isolation Condenser	139
5. High Pressure Core Cooling	141
6. Automatic Pressure Relief	146
7. Low Pressure Core Cooling	151
8. Ultimate Heat Removal and/or Makeup	156
9. Support Systems	162

Figures

B-1 System Information & Interactions Covered in Review of AC-Independent Systems..... 101
B-2 System Information & Interactions Covered in Review of AC-Dependent Systems..... 102
B-3 MFWS Major Fault Modes..... 105
B-4 Simplified Diagram of Typical Auxiliary Feedwater System..... 106
B-5 AFWS Major Fault Modes..... 111
B-6 Sources of Station Blackout Caused RCS Integrity Loss (PWR)..... 112
B-7 Examples of RCS Isolation Configurations..... 114
B-8 RCS Integrity Major Fault Modes..... 116
B-9 Simplified Diagram of Typical High Pressure Injection System..... 117
B-10 Simplified Diagram of Typical Low Pressure Injection System..... 119
B-11 Simplified Diagram of Typical RCS Relief Valve Arrangement..... 121
B-12 Simplified Diagram of Alternate Configuration for HPIS..... 122
B-13A Fault Tree for High Pressure Makeup..... 123
B-13B HPIS Major Fault Modes..... 124
B-13C PORV Major Fault Modes..... 125
B-14 PCS Major Fault Modes..... 129
B-15 Sources of Station Blackout Caused RCS Integrity Loss (BWR)..... 130
B-16 RCS Integrity Major Fault Modes..... 133
B-17 Simplified Diagram of Manual Feedwater Coolant Injection System..... 135
B-18 Simplified Diagram of Auto Feedwater Coolant Injection System..... 136
B-19A Auto FWCI Major Fault Modes..... 137
B-19B Manual FWCI Major Fault Modes..... 138
B-20 Simplified Diagram of Typical Isolation Condenser Design..... 140
B-21 Isolation Condenser Major Fault Modes..... 142
B-22 Simplified Diagram of Typical HPCI/RCIC Systems..... 143
B-23 Simplified Diagram of HPCS..... 144
B-24 HPCI/RCIC Major Fault Modes..... 147
B-25 HPCS Major Fault Modes..... 148
B-26 Simplified Diagram of Typical APRS/ADS Valve Arrangement..... 150
B-27 APRS/ADS Major Fault Modes..... 152
B-28 Simplified Diagram of Typical LPCS (Early Designs)..... 153
B-29 Simplified Diagram of Typical LPCS (Later Designs)..... 154
B-30 Simplified Diagram of Typical LPCI/LPCRS..... 155
B-31 Simplified Diagram of Typical LPCS/LPCI/LPCRS for BWRs 5&6 157
B-32 LPCS/LPCI Major Fault Modes..... 158
B-33 Simplified Diagram of Typical Containment Spray/Cooling System..... 160

B-34 Simplified Diagram of Typical Shutdown Cooling System..... 161
B-35 Long-Term Heat Removal Major Fault Modes..... 163

Tables

Table

B-1 Summary of Information Sources..... 97
B-2 Systems Included in Review Scope (PWRs)..... 98
B-3 Systems Included in Review Scope (BWR 2/3 Designs)..... 99
B-4 Systems Included in Review Scope (BWR 3/4/5/6 Designs)..... 100

INTRODUCTION

This appendix contains information regarding the various shutdown cooling system configurations which exist for operating or near-term operating plants. Those systems particularly important to the station blackout issue are addressed. The following information was gathered from a multitude of sources and an effort has been made to reflect the systems with post-TMI-2 changes incorporated in their design and/or operation.

Also described is the review process which we used for nearly nearly two years while gathering the system information summarized in this appendix.

A. SYSTEM REVIEW PROCESS

A major effort of this program involved a review of shutdown cooling and related systems currently existing or those systems planned for near-term operating plants. This review included system capabilities as well as support features necessary for long-term operation of the major shutdown cooling systems. The focus of this review was on the identification of AC power dependencies, the adequacy of AC independent systems, the reliability of systems under station blackout and, where appropriate, the impact of procedures. This section discusses the results of the review using plant PRAs, SAR material, and other information sources. (See Table B-1 for sources used.) Each major system of interest is discussed in light of its part in the generic event trees. A general description of the system and information regarding system operations are presented. The major system interfaces and the dominant system failure modes are also identified.

The systems or functions reviewed are listed in Tables B-2 through B-4. These include: (1) the shutdown cooling systems of primary interest to the station blackout issue; (2) the support systems necessary for the operation of the shutdown cooling systems; (3) containment systems; and (4) other miscellaneous systems that could potentially have an effect on station blackout sequences.

The review process itself is diagrammatically shown by Figures B-1 and B-2. These figures depict system information and interactions covered during the review process. As can be seen, the review process includes information regarding the system itself as well as interactions involving power requirements, effects of prolonged AC loss, human interactions, and potential common modes among systems. The AC-independent (or at least partially independent) systems were examined in a little more detail than the AC-dependent systems. It is the AC-independent systems which must initially operate following station blackout, and thus all failure modes of these systems could be important to core damage sequence probabilities. The AC-dependent system operation is contingent on recovery of AC power and so a less detailed review of the AC-dependent systems has been conducted. This review was made

Table B-1

SUMMARY OF INFORMATION SOURCES

TYPE OF INFORMATION \ SOURCE	FSAR's	PRA's	SASA	GENERIC FEED-WATER STUDIES	NUREG-0737 RESPONSE	INDUSTRY B&W AFW RESPONSE	S.B. PROCEDURES NRC LETTER 81-04	NRC LER DATA SUMMARIES	SWAIN'S HANDBOOK HUMAN FACTOR	LERS	DC POWER STUDY	PLANT VISITS	MISC.	NRC PLANT DATA FILE
SYSTEM INFORMATION	X	X		X	X	X	X					X	X	X
SYSTEM SUCCESS CRITERIA	X	X	X	X		X								
SYSTEM/ COMPONENT FAILURE MODES		X	X	X	X	X		X		X	X		X	
OPERATING PROCEDURES	X	X		X		X	X					X		
FAILURE DATA		X		X	X			X	X	X	X		X	
TIMING OF EVENTS IN ACCIDENT SEQUENCE	X	X	X	X	X		X					X		

Table B-2

Systems Included in

Review Scope

(PWRs)

Major Systems/Functions

MFWS

RCS Integrity { PORVs*/SRVs*/Block Valves, RCS Isolation*, Rx Coolant Pump Seal Failures

AFWS*/EFWS*

HPIS

Support Systems/Functions

Power -AC/DC*

Heating/Cooling

Ventilation

Lubrication

Water*/Air

Lighting*

Other Systems

Upper Head Injection*

LPIS

Accumulators*

RHR

Containment Systems/Functions

CSIS/CSRS/CHRS

Containment Isolation*

Radioactivity Removal

Hydrogen Control

Miscellaneous

Control Room Indications*

Operator Procedures

Human Interactions

*Usually at least partially AC-independent.

Table B-3

Systems Included in

Review Scope

(BWR 2/3 designs)

Major Systems/Functions

PCS
RCS Integrity {SRVs*, RCS Isolation*, Recirc. Pump Seal Failures
FWCI/HPCI*
Isolation Condenser*
APRS*
LPCS/LPCI/Containment Spray-Cooling System
SDCS

Support Systems/Functions

Power - AC/DC*
Heating/Cooling
Ventilation
Lubrication
Water*/Air
Lighting*

Other Systems

VSS*
CRDS

Containment Systems/Functions

Containment Isolation*
Radioactivity Removal
Hydrogen Control

Miscellaneous

Control Room Indications*
Operator Procedures
Human Interactions

*Usually at least partially AC-indpendent.

Table B-4

Systems Included in

Review Scope

(BWR 3/4/5/6 designs)

Major Systems/Functions

PCS
RCS Integrity {SRVs*, RCS Isolation*, Recirc. Pump Seal Failures}
HPCI* or HPCS/RCIC*
ADS*
LPCS/LPCI (RHR mode of operation)
LPCRS (RHR mode of operation)

Support Systems/Functions

Power - AC/DC*
Heating/Cooling
Ventilation
Lubrication
Water*/Air
Lighting*

Other Systems

VSS*
CRDS
RHR (modes other than LPCI/LPCRS)

Containment Systems/Functions

Containment Isolation*
Radioactivity Removal
Hydrogen Control

Miscellaneous

Control Room Indications*
Operator Procedures
Human Interactions

*Usually at least partially AC-independent.

FIGURE B-1

SYSTEM INFORMATION & INTERACTIONS
COVERED IN REVIEW OF
AC-INDEPENDENT SYSTEMS

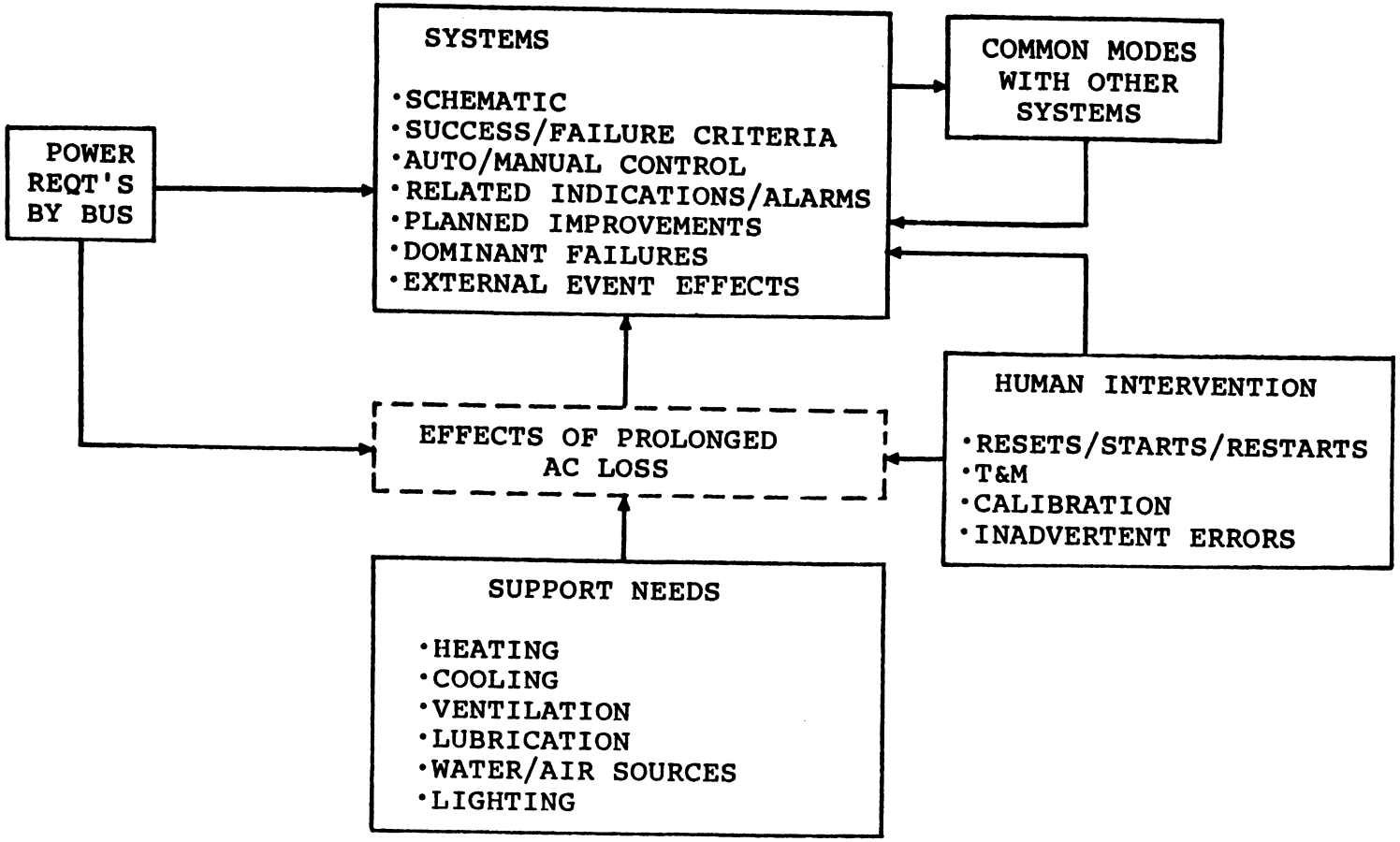

FIGURE B-2

SYSTEM INFORMATION & INTERACTIONS COVERED IN REVIEW

OF AC-DEPENDENT SYSTEMS

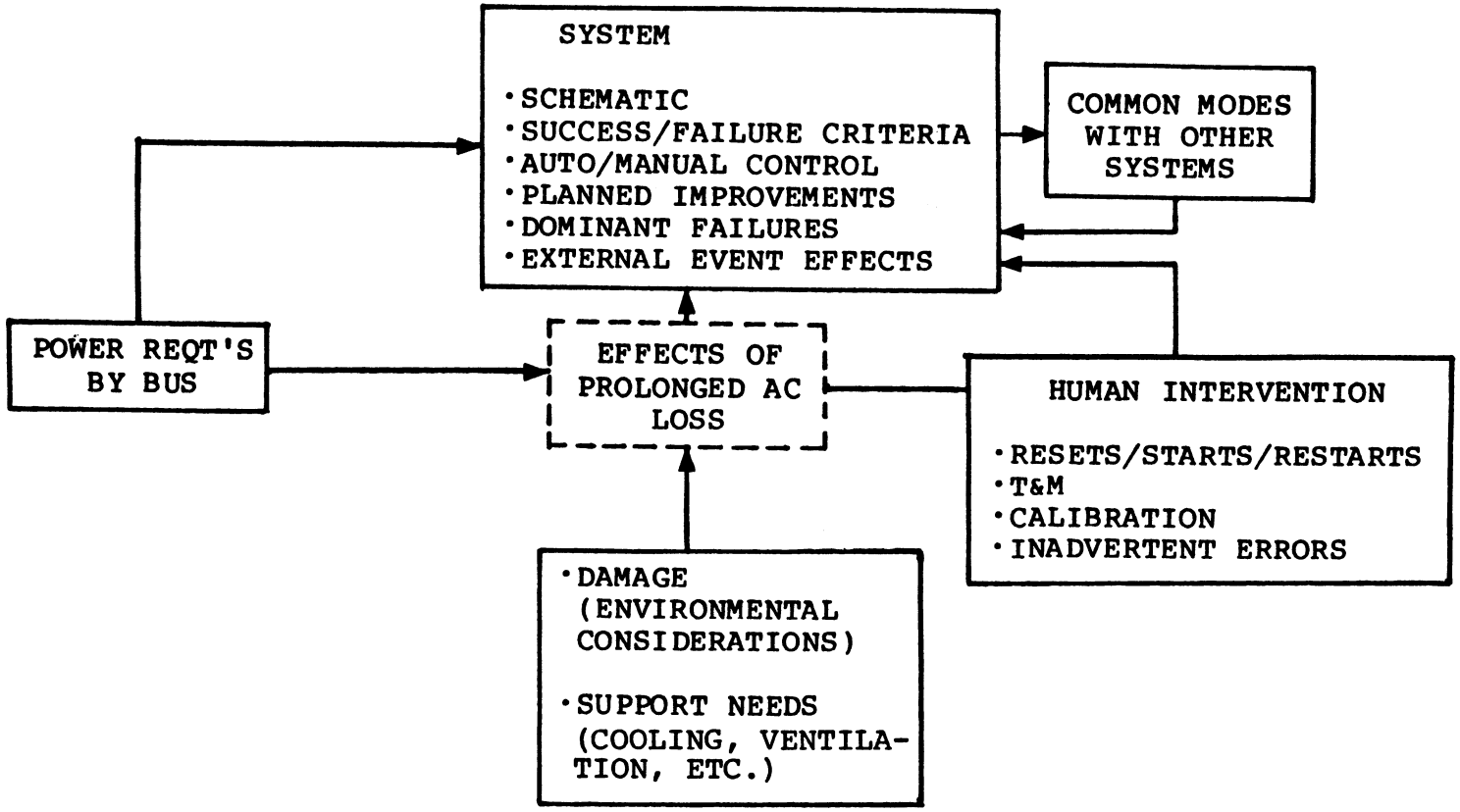

simply to ensure that there are no other potentially-dominant, non-recovery considerations for such systems.

Plant procedures [47,48] for station blackout were reviewed and found to range from those which consider the specific operator actions that would be required for an extended loss of AC power to those which say they would simply restore power. Since the non-recovery of power dominates much of this issue, procedures which simply address power recovery in general terms would appear to be inadequate. Many of the observations in this and ORNL's report should be considered in the station blackout procedures currently being prepared.

Plant visits [50] were also very useful in obtaining information which simply cannot be easily obtained from other sources. Most information from FSARs is out of date or too vague to provide the specific data that is needed. Other more current information is very difficult to get unless one can talk directly with plant and utility personnel.

Information from plant visits was obtained in four general areas: (1) operational insights -- to be able to talk to operators and other plant personnel about what they would do for a specific accident sequence especially in a case such as station blackout where, in many cases, written procedures are just being developed, (2) plant layout -- while one can get some information on plant layout from FSARs and on the phone, a walk around the plant allows one to notice potential failure modes that one would not have otherwise thought of or sufficient information was just not available to determine its significance, (3) specific system information -- examples of the types of information which were found that were not otherwise available are setpoints on crucial trips, insights into trip bypass capability, system improvements planned for the future, specific power bus assignments which were otherwise unavailable, and plant personnel "feelings" and experiences on loss of ventilation problems, and (4) testing -- it is very hard to determine second hand whether or not a whole system is tested or if the test is representative of a true demand situation.

Regarding the system information that follows, specific references have not been indicated for each item of information except in those cases where it was felt necessary to do so. Therefore, in general, the information listed represents a composite of system information based on all the references used.

B. PWR SYSTEMS

1. Main Feedwater (MFW)

a. Introduction

The MFW system is the normal means of heat removal from the core when the plant is operating. The MFW can also be used to cool the plant when it is shutdown. In either case, water is pumped to the steam generators where it absorbs heat from the primary coolant and is converted to steam. The steam is dumped into the condenser where the heat is removed; the water is then recirculated.

MFW systems typically contain two or three trains of feedwater with either steam or motor-driven feedwater pumps. Condensate and condensate booster pumps (part of the feedwater trains) are always motor operated and require offsite AC power while DC power is needed for breakers and control. As a result, offsite power and DC power, if lost, must be restored before the MFWS can be recovered for decay heat removal. Even then, potential problems in restarting MFW exist. These problems include:

(1) Since the condenser vacuum will most likely be broken, those plants which require a condenser vacuum to operate the condensate or condensate booster pumps would require some time to redraw a vacuum.

(2) If the feedwater pumps do not work, then blowdown of the steam generators and subsequent operation of the condensate pumps may be possible.

b. Major Fault Modes

See Figure B-3.

2. Auxiliary Feedwater (AFW)

a. Introduction

AFW systems are designed to cool down the plant under accident conditions. Water is taken from a source and pumped to the steam generators where it absorbs heat from the primary system and is converted to steam. This steam is then vented to the atmosphere through the steam relief valves.

Almost all AFW systems vary from one another; most, however, vary in minor ways. Most systems have one turbine-driven train and one or two motor-driven trains. On loss of AC, only the turbine-driven train can possibly be working. The failure probability is dominated by single failures in the turbine-driven train (i.e., failure of turbine to start, turbine train out due to

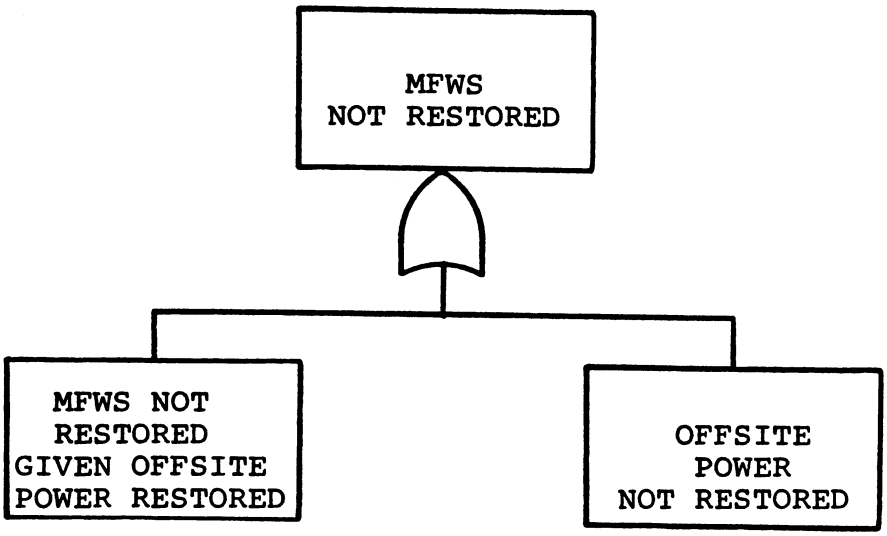

FIGURE B-3. MFWS MAJOR FAULT MODES

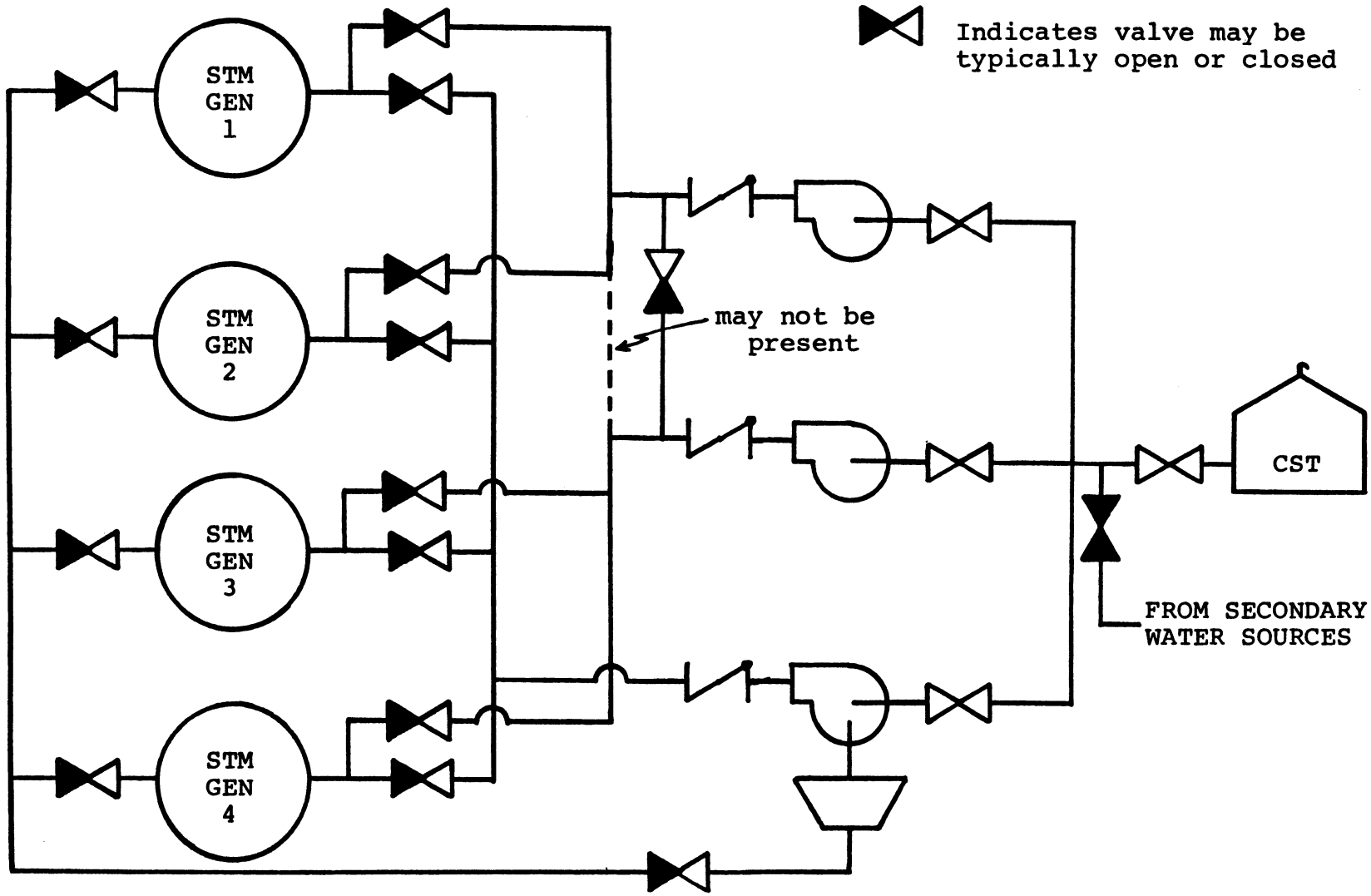

FIGURE B-4. SIMPLIFIED DIAGRAM OF TYPICAL AUXILIARY FEEDWATER SYSTEM

test and maintenance, etc.). These single failure probabilities appear to be so dominant that differences in the motor-driven trains under loss of all AC conditions (which at most may provide some alternate paths to get water to the steam generators) will not affect other lower-order failure modes and, therefore, will not affect the overall failure probability.

In order to support these conclusions, a fault tree analysis was conducted in which plant configurations of AFW systems with one turbine-driven pump (covering at least 28 plants) were studied. The study was made to determine if the different available water and steam flow paths and number of steam generators significantly affect the AFWS unavailability or unreliability. This review was conducted (1) under loss of all AC conditions and (2) with AC power restored. Inherent in this analysis were the assumptions that the following recommendations of NUREG-0737[37] #II.E.1.2 and the generic feedwater studies[26-28] have been implemented. These assumptions are: (1) Provide automatic initiation of AFW; (2) Lock open single valves that could interrupt all AFW flow; and (3) There be no AC dependencies of essential valves and pump auxiliaries (cooling and lubrication). Furthermore, potential common modes were also examined.

It was concluded that under loss of AC conditions: (1) The dominant single failures are turbine pump hardware or T&M and valve failure in the steam admission line; and (2) All other failures are passive or double and are significantly less likely. With AC power, no active single failure modes exist; thus, the major difference in AFWS success depends on the number of motor trains.

b. System Description

(1) Basic configuration (~90% of plants; 1 turbine and 1 or 2 motor trains)

(a) Typical system diagram -- See Figure B-4.
(b) System characteristics:

- There is one turbine driven pump and one or two motor driven pumps.
- Lubrication and cooling of the motor pumps may be AC-independent.
- All components in the turbine train are AC-independent (i.e., they depend on DC power or some alternative source).
- All systems have auto-initiation on various signals. Typically: undervoltage, loss of offsite power, high ΔP between steam generator, loss of main feed pumps, low-low level in "m" of "n" steam generators, or low pressure in steam generators. There are also provisions for remote or local manual start.

- Plants may have two, three, or four steam generators of which at least two feed the turbine pump.
- The secondary water source may or may not require AC power to prepump water to the AFW pump intake. The switchover may be manual or automatic on low level in the condensate storage tank (CST).
- In general, all pumps can feed all steam generators; but, in a few plants, each motor pump can feed only one-half the steam generators, and they cannot be cross-connected. (This usually occurs at multi-unit sites where motors are shared.)
- In general, water to one of "m" steam generators is required for success, but, some four-steam generator plants may require water to two. (This may be overly conservative on their part.) Also, only one pump appears to be required to deliver water, although some plants claim only 50 percent capacity motor-pumps.
- The steam generator blowdown line has one or two air or solenoid operated valves which may be open or closed. These fail closed on loss of power. They may be on AC or DC power. If the valves are on DC power, they may require remote manual operator closure. AC valves will fail closed on loss of power.
- Main steam isolation valves fail closed on loss of power.
- Many cross-connects exist which are usually AC powered or manual, but can be used to provide alternate flow paths.
- Some plants have a diesel driven pump which supplies its own AC and has its own battery.
- Power supplies:
  - -- Motor trains on separate emergency AC trains or have a dedicated diesel generator.
  - -- Turbine train on station batteries or has its own dedicated battery.
- A single stuck-open steam line relief valve will not lower pressure enough to fail the turbine (SASA[31]).
- Some plants have a separate standby AFW system which may or may not have its own independent diesel generator.

- Steam generator level may be controlled by ICS or a separate safety grade system by regulating the water flow control valves and/or the turbine speed.
- All have minimum flow recirculation lines which would not divert sufficient flow to cause failure.
- Some have large test lines which, if left open, could cause failure by flow diversion. This could be corrected manually.
- It appears that the turbine pump will not fail on loss of ventilation. (Although some plants have indicated that their turbines are not explicitly qualified for the highest possible temperature; they are in the process of getting them qualified.)

(2) Alternate configuration

- Similar to basic configuration, but with two or three turbine pumps and one or zero motor pumps.

(3) Possible sensitivities

- Time when it becomes necessary to switch to secondary water source varies with number and size of CSTs or other tanks (from 6->24 hours).
- There appear to be many instances of trouble with CST level so the above times which are for minimum technical specification limits could be reduced by some factor.
- Mode of operation of turbine on loss of DC power may vary: [69]*
  - -- Loss of power, turbine trips out and cannot be manually controlled.
  - -- Loss of power, all valves fail open, turbine trips on overspeed unless manually throttled (not difficult for small turbine).
  - -- Loss of power, all valves fail open, turbine runs at some preset speed (maintains constant ΔP from steam generator to pump discharge) or is manually throttled, but may fail after some time if steam generator fills up and water enters steam line to turbine.
- Valves on turbine train generally fail open, but some plants may still have fail closed or fail as is. (Also, some air operated valves may fail at 50%.)
- May have dedicated diesel pump independent of DC power.
- Ventilation may be required on diesel pump designs.

*Additional reference: Telephone communication with R. Hebert of Terry Corp.

c. Major Fault Modes

See Figure B-5.

3. Reactor Coolant System Integrity

a. Introduction

The RCS integrity function involves the potential loss of RCS integrity such that: (1) RCS makeup could become a problem; (2) the time to core uncovery is significantly lessened; or (3) risks from various accident sequences are increased due to loss of RCS integrity. Three systems appear to dominate as possible sources of major blackout-induced losses of RCS integrity. These are the primary system relief valves [safety relief valves (SRVs) and pilot operated relief valves (PORVs)], the RCS isolation system, and reactor coolant pump seal leaks (see Figure B-6). Each of these is discussed separately below.

b. System Descriptions

(1) Reactor coolant pump seals

(a) The loss of RCS integrity involves failing the RCP seals due to a loss of seal cooling water.[10,38-42,63,69, & 70]* Little detail is known. Available analysis information predicts quite diverse results ranging from (1) no leak; (2) small leak ~1 gpm increasing slowly to some maximum ~70 gpm over a period of hours; or (3) sudden rupture of seals resulting in ~300 gpm leak. While we believe that most RCP seal designs are similar and, therefore, should have approximately the same failure mode, this item is treated as a sensitivity issue. Limited experience or test information suggests that some leakage may occur but perhaps be limited to ~20 gpm range. (See Appendix G.)

(b) System characteristics

- In general, such leaks are not isolable.
- In general, seal cooling is part of the charging/HPI system. On some plants, component cooling water is used for seal cooling.
- The coolant and volume control system or makeup and purification system are automatically isolated. The seal cooling system may or may not be isolated, depending on whether the water is cycled back to the charging pumps (typically not isolated) or the seal water is

*Additional reference: Telephone communication with F. Hayes of GE.

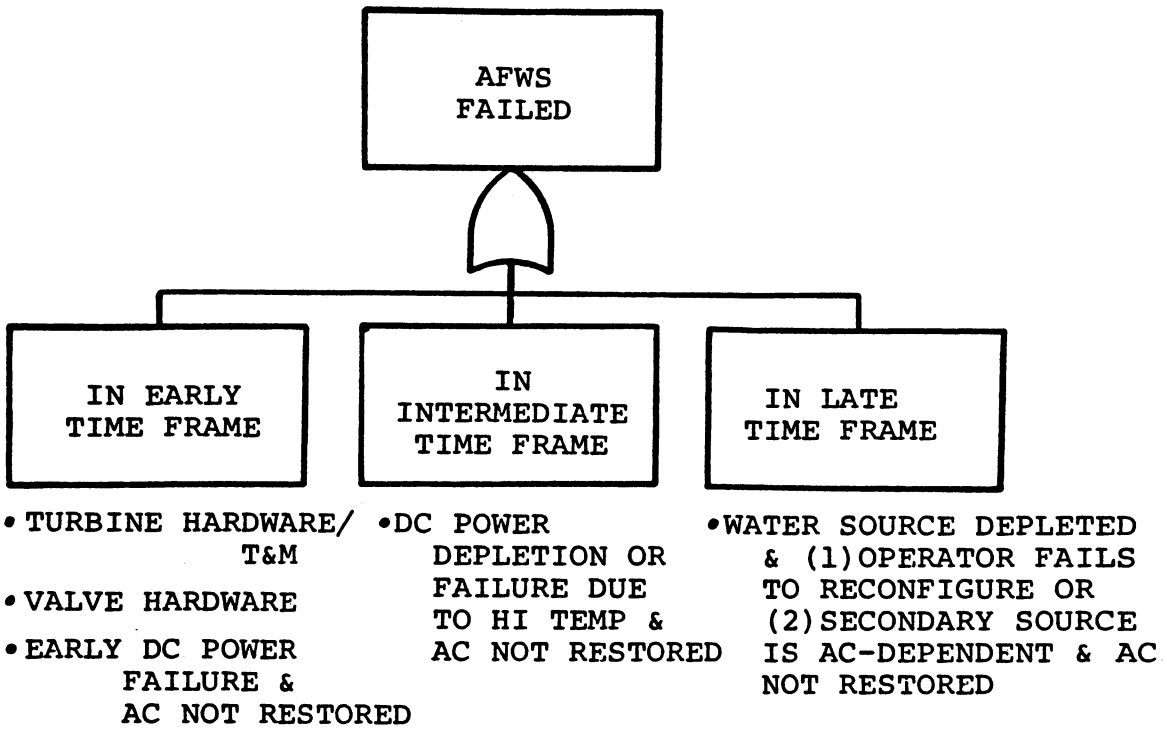

FIGURE B-5. AFWS MAJOR FAULT MODES

FIGURE B-6. SOURCES OF STATION BLACKOUT CAUSED RCS INTEGRITY LOSS (PWR)

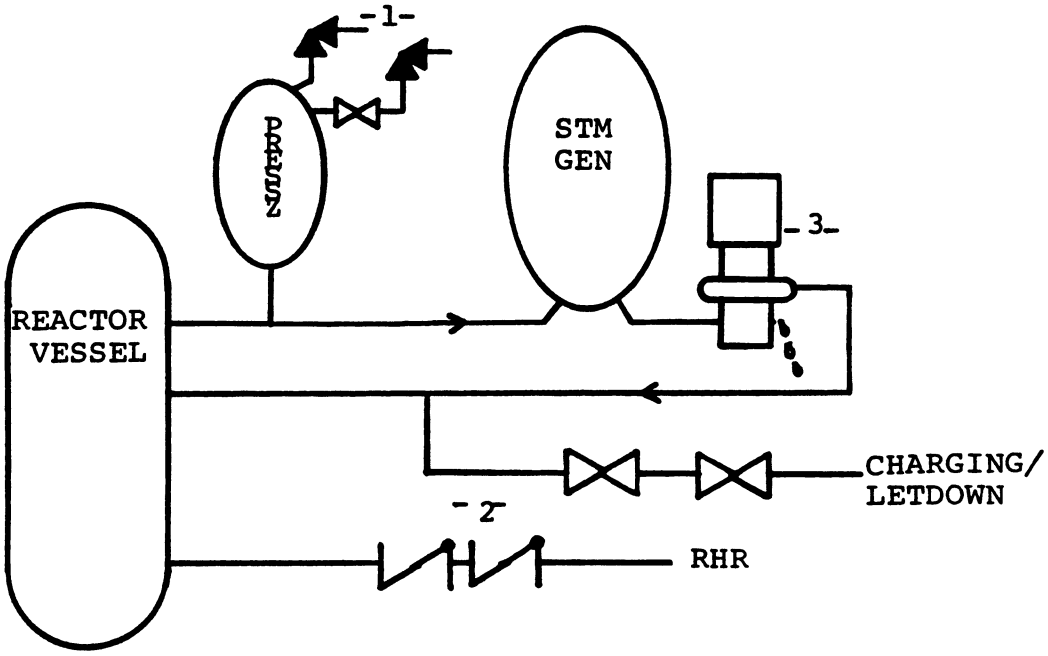

1-STUCK-OPEN SRVs/PORVs
2-RCS ISOLATION FAILURES
3-REACTOR COOLANT PUMP SEAL FAILURES

discharged to the makeup tank. In the latter case, because of the possible release of radioactive material to the atmosphere during the recirculation phase, seal cooling is automatically isolated.

(2) Reactor coolant system isolation

(a) Introduction

The RCS isolation system serves to isolate possible radiation release paths under certain transient or accident conditions. Typically, different levels of isolation exist depending on the plant response to the initiating event.

(b) System characteristics

- The system is automatic with manual actuation possible from the control room.
- Common isolation designs have two redundant means for isolating a particular line so that only one isolation valve must close to maintain RCS integrity.
- The valves may depend on AC power, DC power, or no power, as in the case of check valves or air-operated valves that fail closed on loss of air. The major case of interest is when both valves on a line are AC dependent, since, in the case of station blackout, the line would require local manual isolation. The most susceptible line appears to be the letdown line. (See Figure B-7 for RCS isolation examples.)

(3) Relief valves

The relief valves are discussed in more detail in Section B.4.b where they form part of the high pressure makeup function. Typically, there are three SRVs and up to three PORVs attached to the pressurizer. If these valves should fail open, an uncontrolled leak would occur and could eventually result in core uncovery.

Because the PORV setpoint is less than the SRV setpoint, the dominant failure mode on loss of AC would be a PORV sticking open. The PORV block valves could not be closed since they are typically AC-powered, motor-operated valves.

FIGURE B-7. EXAMPLES OF RCS ISOLATION CONFIGURATIONS

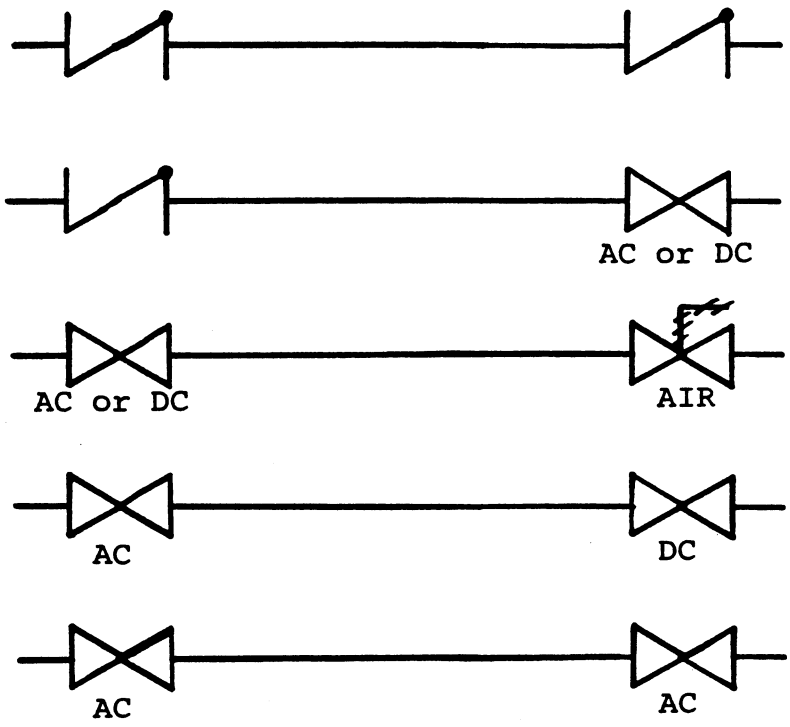

If cooling exists (i.e., successful AFWs or MFWs), the PORVs should not be demanded very often; however, without cooling, they will be in almost constant demand. The result in the latter case is a nearly continuous leak and eventual core uncovery unless the HPIS, AFWs, or MFWs can be started.

c. Major Fault Modes

See Figure B-8.

4. <u>High Pressure Makeup</u>

a. Introduction

The high pressure makeup function consists of the following systems: (1) High Pressure Injection (HPI); (2) Low Pressure Injection (LPI); and (3) the relief valves on the primary coolant system (PORVs and SRVs).

These systems basically perform two functions: (1) makeup of primary coolant in case of a leak; and (2) possible cooling of the primary system when operated in a "feed and bleed" mode.

b. General System Descriptions

(1) Basic configuration (typical Westinghouse/Combustion Engineering)

(a) High pressure injection

(i) System diagram -- See Figure B-9.
(ii) System characteristics:

- If there are two safety injection or charging pumps, one is on each AC power train. If there are three pumps, then the third may be switched between power trains. (See note on positive displacement pumps below.)
- Pump lubrication may be self-contained, but usually is not.
- Pump cooling requires AC power.
- The valves are usually AC-powered MOVs.
- The boron injection tank and support piping requires AC heating to prevent boric acid crystallization.
  -- Would take approximately 4-5 hours to cool down and precipitate out. Even so, it is doubtful this could prevent success of HPI (lines are relatively large).

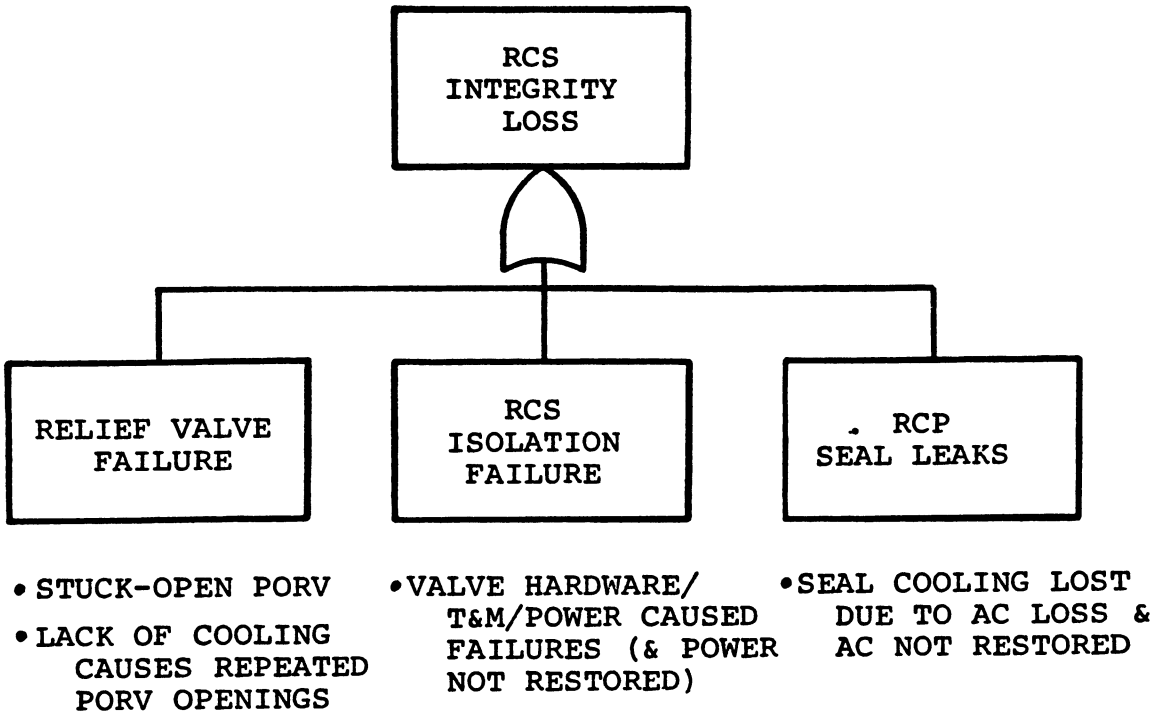

FIGURE B-8. RCS INTEGRITY MAJOR FAULT MODES

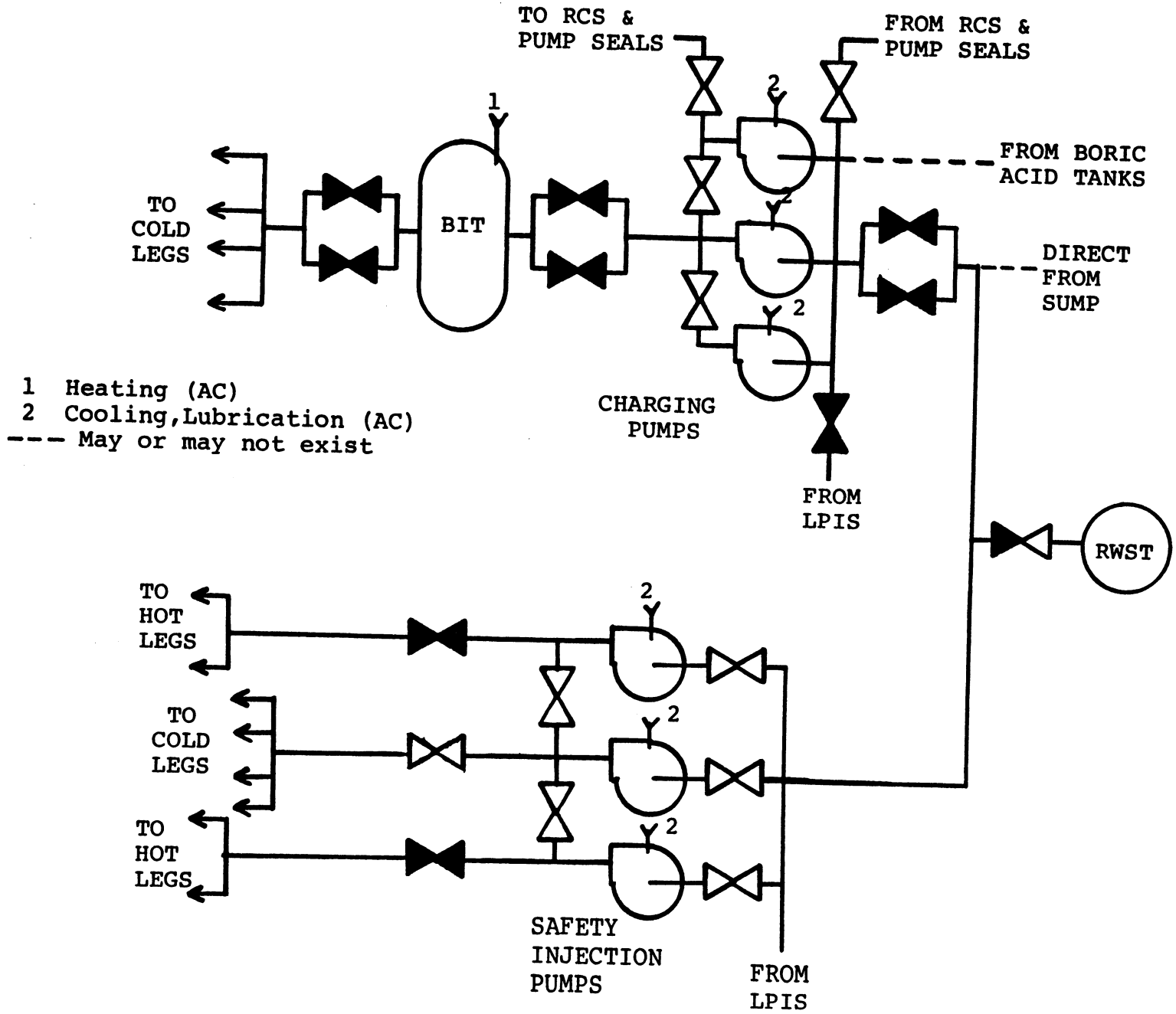

FIGURE B-9. SIMPLIFIED DIAGRAM OF TYPICAL HIGH PRESSURE INJECTION SYSTEM

- Initially, water may be drawn from the refueling water storage tank for all pumps or from the boric acid tanks for the charging pumps (gravity fed) and the RWST for the safety injection pumps.
- All have automatic initiation (they may also be initiated manually from control room).
- On depletion of RWST, manual switching is typically required to realign for the recirculation phase where water is drawn either directly from the sump (with no cooling) or indirectly from the sump through the low pressure injection system (with AC cooling).
- At least one of the charging pumps on all plants with low head pumps is a positive displacement pump with a capacity ~100-200 gpm and will be sufficient for decay heat removal starting in the one-to-three hour range. If there are three charging pumps, the positive displacement pump may not be on emergency power.
- For small LOCAs, success would be one of "m" trains or possibly two of "m" trains in injection mode and one of "m" trains in recirculation mode.
- About 50 percent of the plants have high head pumps (i.e., greater than SRV set-point).
- Present SASA[31] information indicates HPI will be needed by ~60 hours (even with no leaks beyond technical specification limits) assuming the plant remains in stable condition to that point.

(b) Low pressure injection

(i) System diagram -- See Figure B-10
(ii) System characteristics:

- Two/three pumps. Lubrication and cooling are AC powered. Third pump may be switched between AC power trains.
- Valves are AC-powered MOVs.
- Heat exchangers require AC cooling water.
- Draw from same source as HPI (i.e., RWST).
- Switch to recirculation mode is manual on depletion of RWST, but may be partially automatic.
- Success is one of "m" trains.

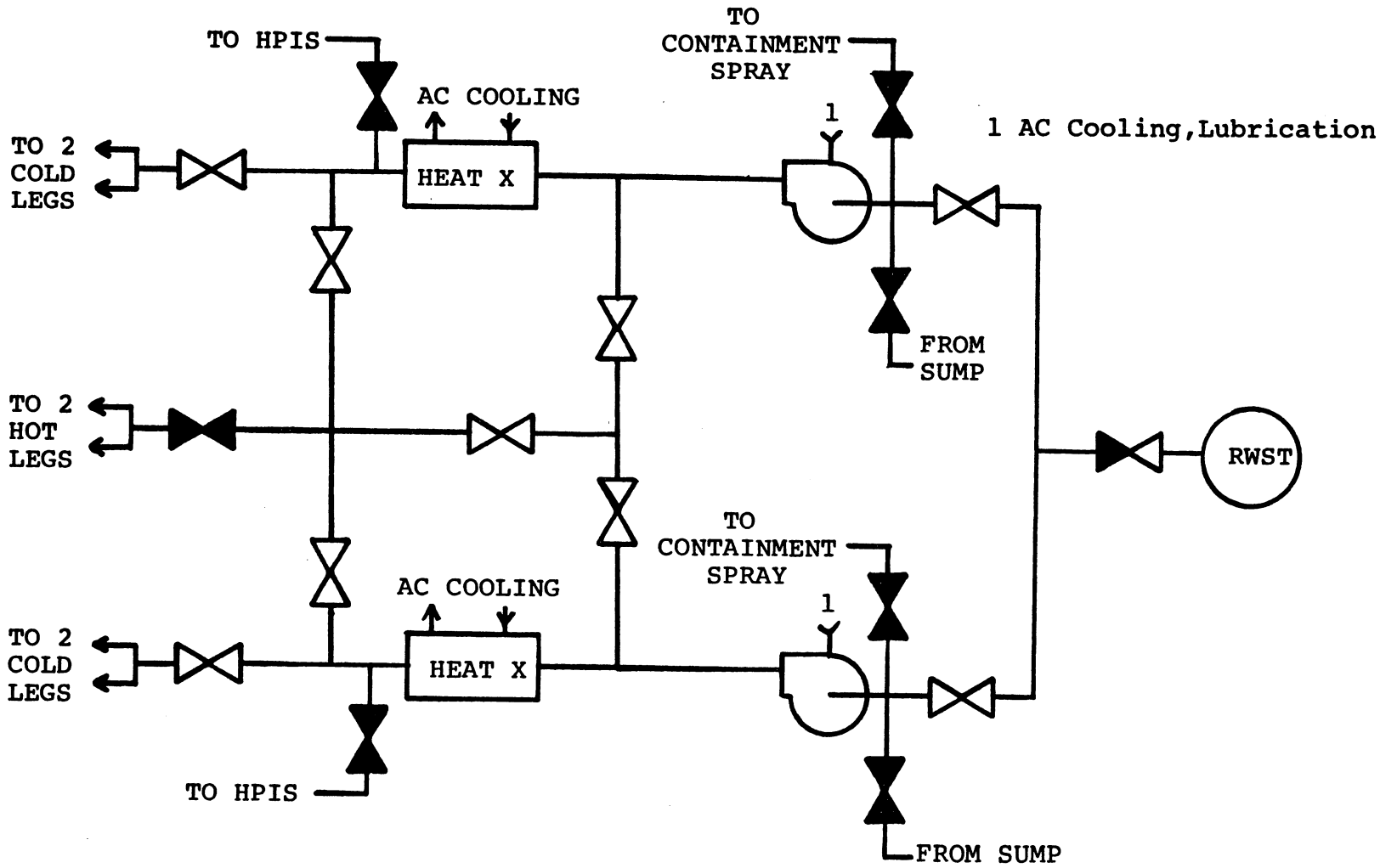

FIGURE B-10. SIMPLIFIED DIAGRAM OF TYPICAL LOW PRESSURE INJECTION SYSTEM

(c) Relief valves

(i) System diagram -- See Figure B-11.
(ii) System characteristics:

- Plants may have 0, 1, 2, or 3 PORVs.
- SRVs and PORVs are self-actuating when pressure is greater than their setpoint.
- The PORVs can be AC or DC powered (usually DC) and can be manually operated from the control room.
- Each PORV has a block valve which is an AC-powered MOV. Prior to TMI, these were on offsite power, but they are now being put on emergency AC[43-45]. Most plants operate with the block valves open, but a very large percentage, ~40 percent, operate with some or all of their block valves closed[43-45].
- There is some question as to whether or not the PORVs can relieve sufficient system pressure to allow HPI to work in the absence of some other cooling (MFW, AFW) on those plants where the injection pressure is less than the PORV setpoint.

(2) Alternate configuration (A-1) (typical Babcock and Wilcox)

(a) System diagram -- See Figure B-12
(b) System characteristics:

- Three pumps, one on each AC power train. Third can be switched between trains.
- One pump is always running as part of makeup system.
- Initially draws water from the Borated Water Storage Tank (BWST) until depleted, then draws from sump via LPI.
- Virtually all pumps are high head with shut-off greater than SRV setpoint.
- Other characteristics as in basic configuration.

(3) Possible sensitivities

- Time to switch to recirculation mode.
- "Feed and Bleed": Succeeds-Fails?
- Positive displacement pump is either on emergency AC or it is not.

c. Major Fault Modes

See Figures B-13A, B, and C.

FIGURE B-11. SIMPLIFIED DIAGRAM OF TYPICAL RCS RELIEF VALVE ARRANGEMENT

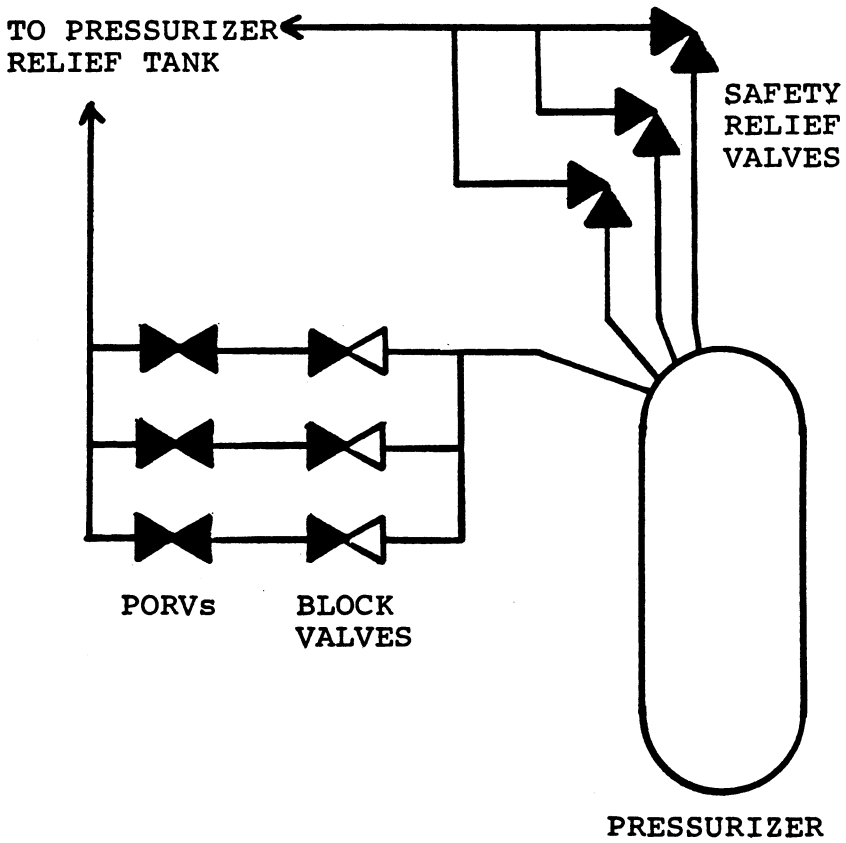

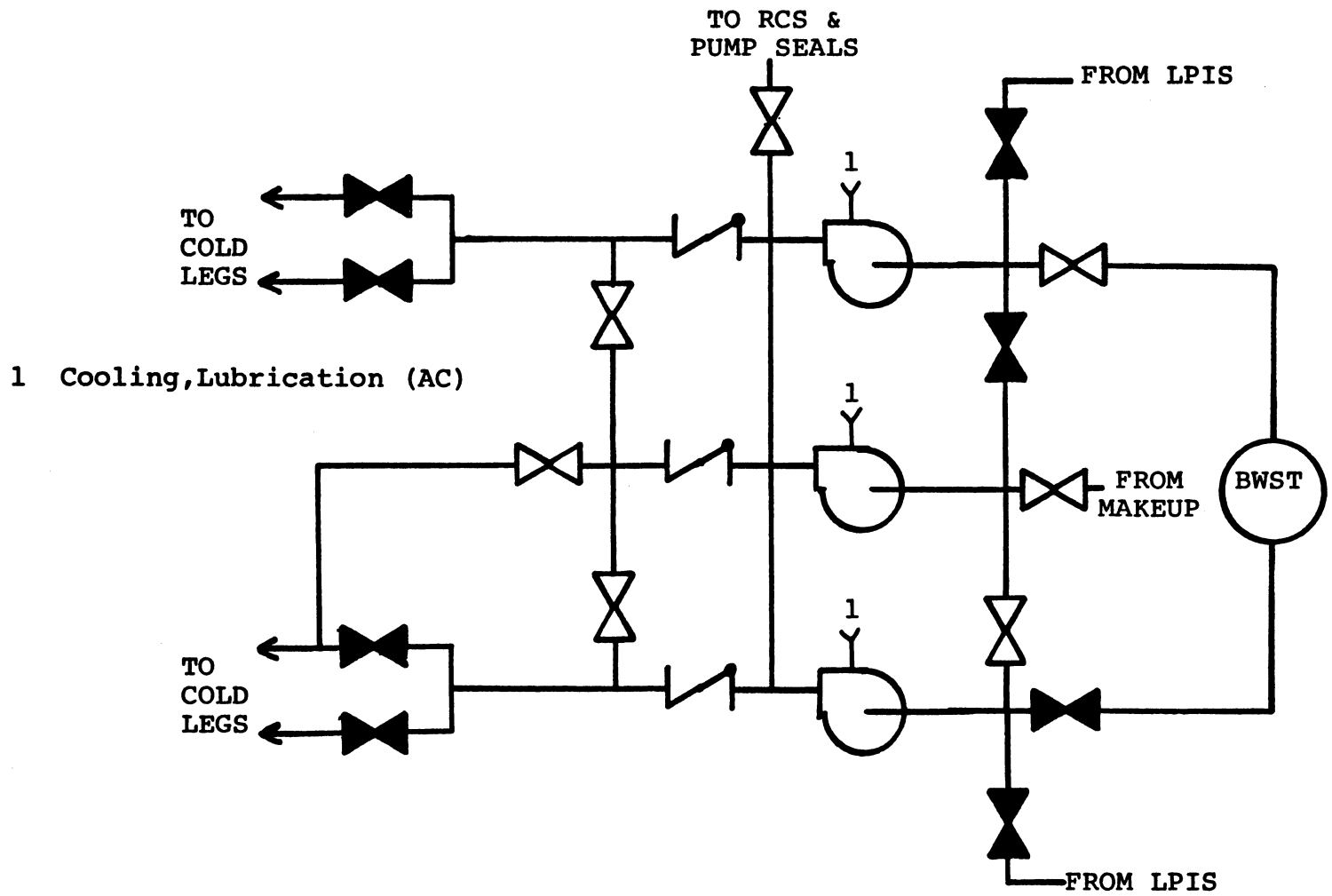

FIGURE B-12. SIMPLIFIED DIAGRAM OF ALTERNATE CONFIGURATION FOR HPIS

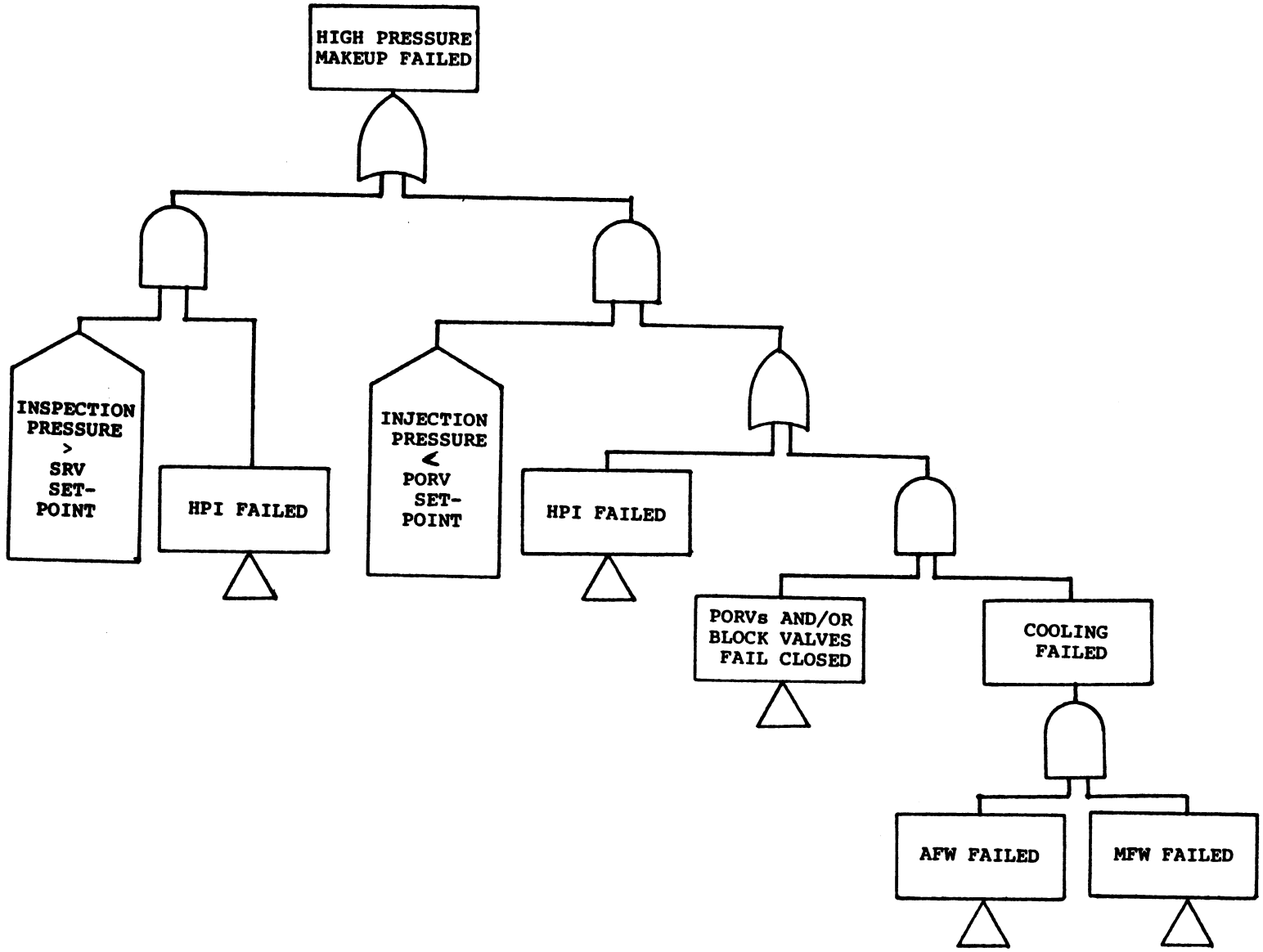

FIGURE B13-A. FAULT TREE FOR HIGH PRESSURE MAKEUP

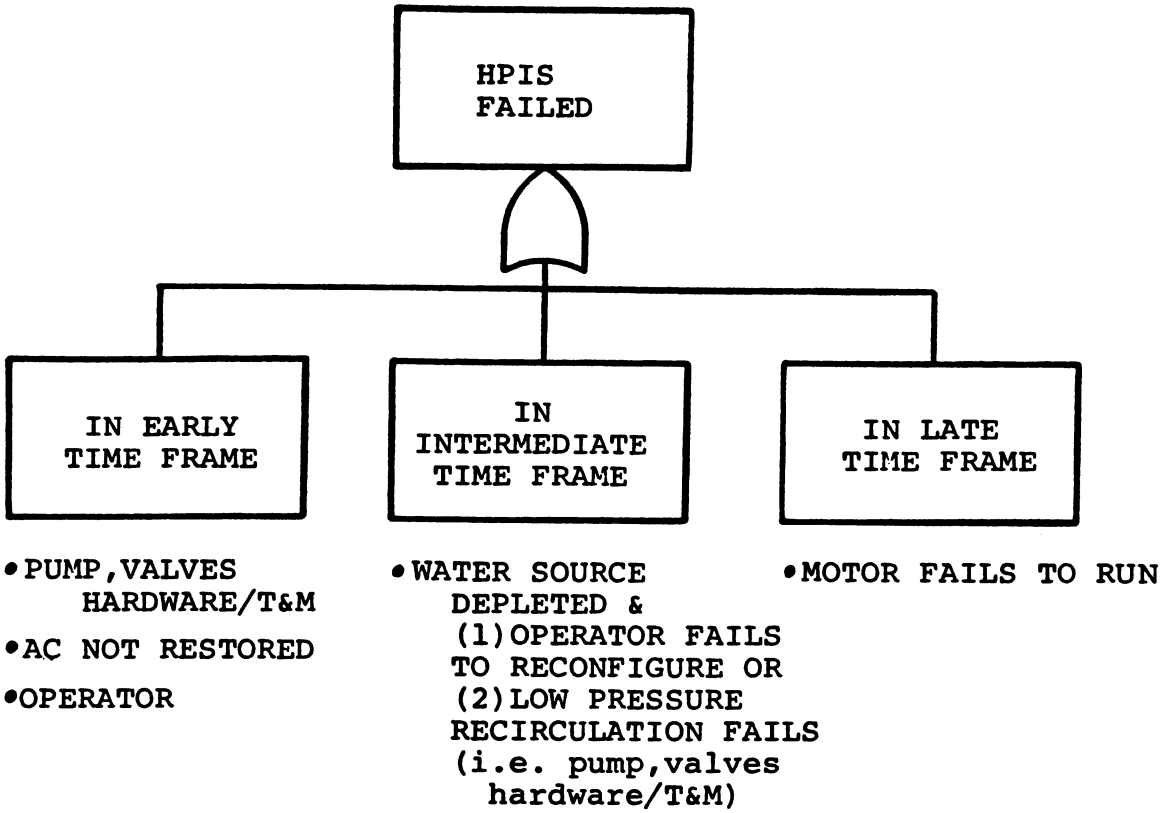

FIGURE B-13B. HPIS MAJOR FAULT MODES

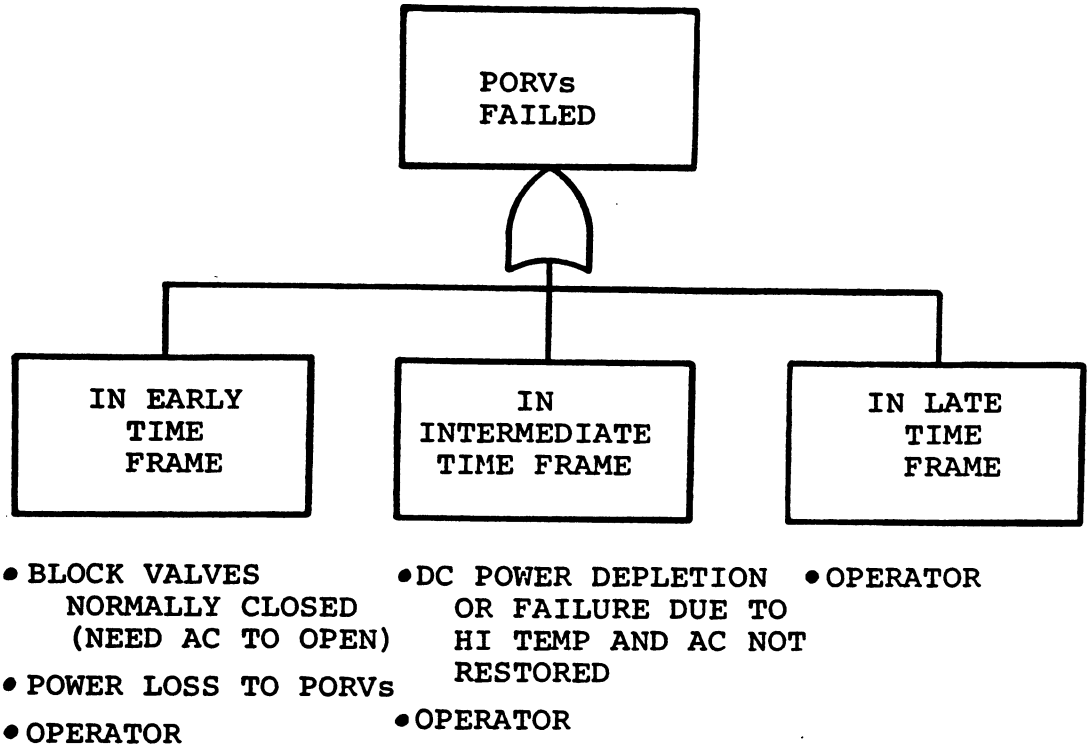

FIGURE B-13C. PORV MAJOR FAULT MODES
(WHEN USED IN CONJUNCTION WITH HPIS
FOR "FEED & BLEED")

5. Support Systems

These systems support almost all other systems and because of this have been grouped together here.

a. Power

(1) Components may be on AC, DC, or AC/DC power. This power may be emergency or normal.

(2) In general, the components in the following systems are on emergency power: AFW, HPI, LPI, PORVs, RCS isolation, ventilation, and lubrication and cooling for these systems.

(3) The components of the MFWs are on normal power.

(4) AC power

- AC power configurations are being modeled explicitly by ORNL as part of the station blackout program.
- Offsite -- treated with a certain probability of recovery with time.
- Emergency Diesel Generators -- feed two or more trains of emergency power. Configurations are covered in work by ORNL.

(5) DC power

- Typically, two batteries feed two trains.
- There may be additional batteries dedicated to particular systems such as diesel generators, gas turbines, or AFW.
- Partial or total failure of the DC power system may be the cause of the station blackout.
- Unless AC power is recovered, the battery will be depleted within a few hours; with appropriate load stripping, this use of battery power could be extended considerably.
- The batteries could fail due to overheating of the battery room without any AC-powered ventilation. Limited available information suggests that adequate ventilation may be achievable by natural circulation upon opening the doors.

b. Ventilation

Since most equipment will not be operating and will not have any heat source nearby, ventilation does not appear crucial to most systems during blackout. When AC power is restored, most likely, ventilation will also be restored. For those systems which will be

operating during the blackout (e.g., AFW and DC power) the ventilation requirements are discussed under their descriptions. Ventilation does not appear to be a problem for the control room; although it may get uncomfortable, adequate ventilation should be available by opening doors and creating some natural circulation.

c. Cooling water

The cooling water systems are similar in design to the HPI system in that water is drawn from a source by several motor pumps and delivered through multiple paths to the components. As an approximation, these systems are modeled similarly to HPI or LPI with regard to each cooling water train configuration.

d. Lighting

There appears to be adequate DC lighting in all important areas in most of the plants; this lighting should last as long as the batteries.

e. Indications

Under blackout conditions and in light of requirement I.D.2 in NUREG-0737[37] as well as observations made on plant visits, it appears that for as long as DC power lasts, adequate instrumentation, indication, and alarm status will exist for the operator to determine plant and system status. Such indications would include steam generator levels and pressures, pressurizer levels and pressure, and RCS temperatures.

f. Miscellaneous

Based on plant visits and on considerable review, it appears at least one train of support features is always on the same AC/DC division as the corresponding safety system which they support. For example, AC Division 1 HPI pump uses cooling water from the AC Division 1 cooling system. This type of design has been assumed in our analyses.

C. BWR SYSTEMS

1. Power Conversion System (PCS)

a. Introduction

This system is the normal means for removing heat from the core and is operating when the plant is in a power-operation mode. It consists of the main steam system, feedwater/condensate system, the circulating water system for the condenser, and other support systems. Many configurations can exist. Some are: a varying number of feedwater trains or motor-operated versus turbine-driven feedwater pumps. This system typically requires offsite AC power for operation as well as DC power for breakers and some control. As a result, this system would be unavailable following a station blackout until offsite AC power and DC power, if lost, were restored. Even then PCS recovery may take time in order to restore lost condenser vacuum, re-open MSIVs, and re-establish feedwater and main steam flow.

b. Major Fault Modes

See Figure B-14.

2. RCS Integrity

a. Introduction

The RCS integrity function involves the potential loss of RCS integrity such that: (1) RCS makeup becomes a critical problem; (2) the time to core uncovery is significantly lessened, or (3) risks from the various accident sequences are increased. As shown in Figure B-15, three systems appear to be potential dominant sources of station blackout-caused losses of RCS integrity. These include the primary system SRVs, the RCS isolation system, and recirculation pump seal leaks. Limited information is available on the pump seal leak problem. The best available sources appear to be References 38, 42, 69, and 70. In addition, some information on possible PWR seal leaks is also useful[10,39-41,63] since the pump seal designs are similar for both PWR reactor coolant pumps and BWR recirculation pumps.

b. System Description

(1) Base configuration (all BWRs)

SRVs:

- Multi-valve configuration for primary system pressure relief.

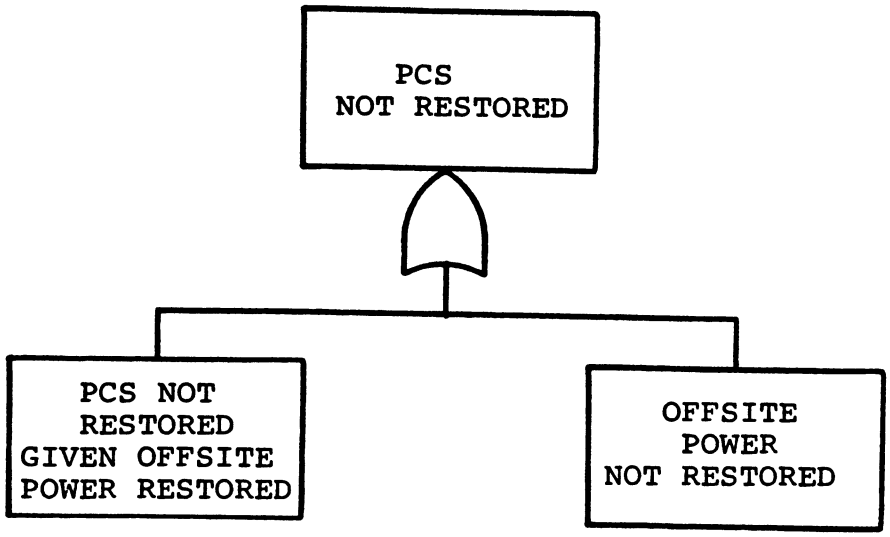

FIGURE B-14. PCS MAJOR FAULT MODES

FIGURE B-15. SOURCES OF STATION BLACKOUT CAUSED RCS INTEGRITY LOSS (BWR)

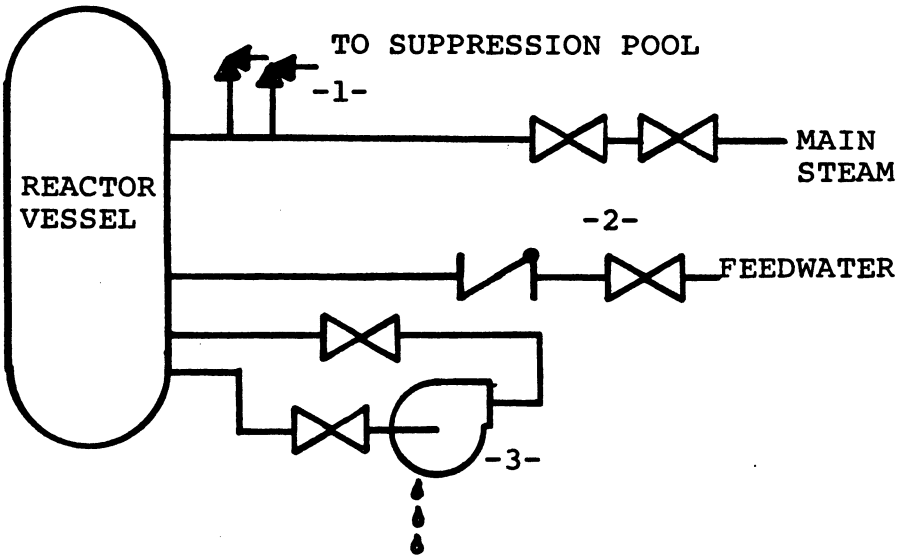

1- STUCK-OPEN SRV
2- RCS ISOLATION FAILURES
3- RECIRCULATION PUMP SEAL FAILURES

- Valves on main steam lines; discharge to suppression pool.
- One valve stuck-open constitutes RCS integrity loss.
- Indirect indication of valve position using temperature or flow.
- Self-actuating on high primary pressure; remote-manual capability from control room.
- Manual operation requires DC power only.

RCS isolation:

- At least two valves exist on each line requiring isolation.
- System is automatically initiated on a variety of signals such as reactor low water level, high drywell pressure, high radiation, among others.
- Remote-manual capability from control room.
- Valves can be self-actuating/AC/DC.

Recirculation pump seals:

- Normally being cooled; seal water system not isolated.
- Typically two sources of seal water exist: component cooling and the seal purge systems. Both sources require AC power.
- Seal leaks are isolable by closing valves associated with leaky pump once offsite AC (or, in some cases, emergency onsite AC) power is restored.

(2) Significant alternate configurations

SRVs (the configurations vary mostly in newer BWRs w/o isolation condensers):

- 4 designs used -- could affect stuck-open probability.
- Number of SRVs -- could affect number of SRV challenges.
- Incorporation of operational changes significantly affecting SRV challenge rate[46,69].

RCS isolation:

- Diversity in isolation concepts. (See Figure B-7.)

Recirculation pump seals:

- Number of recirculation pumps -- BWR-2 designs have 5 while newer reactors have 2 pumps (the number of pumps could affect the leak rate).

(3) Possible sensitivities

Sensitivity	Applicable Configurations
SRV design	New BWRs only
No. of SRV challenges during blackout	New BWRs only
RCS isolation requires AC	All BWRs
No. of recirculation pumps	Older BWRs
Extent of seal failure	All BWRs

c. Major Fault Modes

See Figure B-16.

3. Emergency High Pressure Injection (BWR-2,3 With Isolation Condenser)

a. Introduction

Injection capability at high primary system pressure is supplied by three systems on the older BWRs. These consist of the Control Rod Drive (CRD) system, the Feedwater Coolant Injection (FWCI) system (only on some plants), and the High-Pressure Coolant Injection (HPCI) system (only on some plants). These systems would provide RCS coolant makeup and cooling capability immediately following station blackout if the RCS remains at high pressure. Since the CRD system requires AC power and is of relatively low capacity, no further examination of this system has been conducted and no credit is given for this system. Specifics regarding the HPCI system are discussed in Section C.5 of this appendix.

b. System Description

(1) Base configuration -- there is no single configuration most commonly used. See below.

(2) Significant alternate configurations

(a) Configuration A-1 -- only a CRD system; no credit given for emergency high-pressure injection.

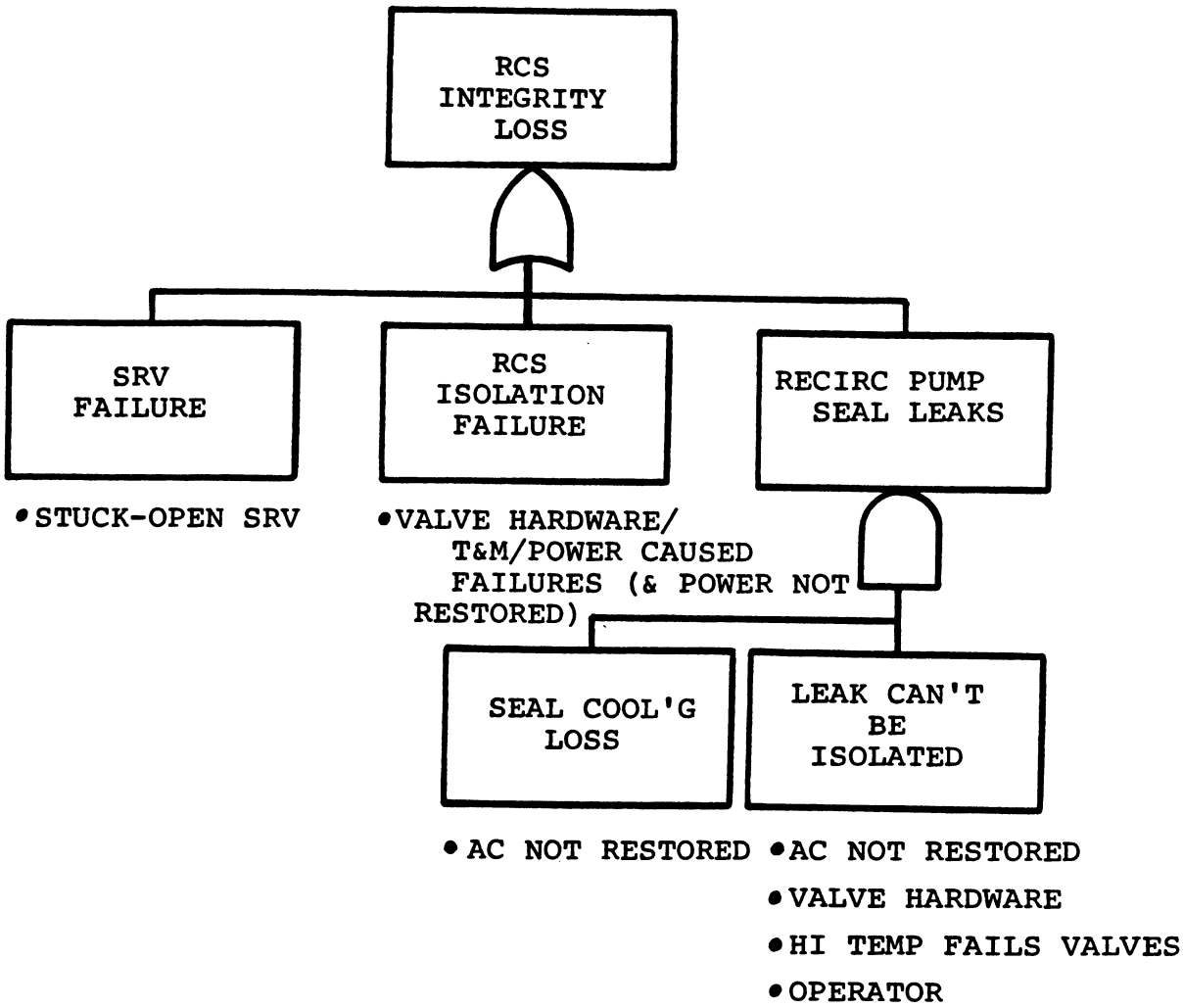

FIGURE B-16. RCS INTEGRITY MAJOR FAULT MODES

(b) Configuration A-2 -- CRD and manual FWCI system. (See Figure B-17).

- Single train system utilizing a diesel-driven fire pump and the normal feedwater injection lines.
- Appears sufficient even under small-LOCA makeup requirements (2500 gpm @125 psig).
- Manual operations include inserting a quick-connect spool piece, opening isolation valves, and starting a diesel-driven fire pump.
- Independent of station AC/DC systems.
- Assumed that the primary system must be depressurized using safety/relief valves.
- Water supply is unlimited.

(c) Configuration A-3 -- CRD and automatic FWCI system. (See Figure B-18.)

- 2-train system using normal feedwater trains on emergency power (gas turbine).
- 1 complete train sufficient for success.
- Auto start on low reactor water level or high drywell pressure.
- Auto throttling on reactor water level.
- Can be operated manually from control room.
- Needs AC power (offsite or gas turbine) for pumps and CST valve; DC power for control logic.
- Can operate with condenser at atmospheric and reactor pressure between atmospheric and relief valve pressure.
- Condenser hotwell water source would last 2 hours. By that time, must provide water from CST.

(d) Configuration A-4 -- CRD and automatic HPCI (Refer to Section C.5 of appendix.)

(3) Possible sensitivities

Some sensitivities are applicable to HPCI system. Refer to Section C.5 of this appendix.

c. Major Fault Modes

Figures B-19A, B-19B, and B-24 depict the potential dominant failure modes for FWCI and HPCI.

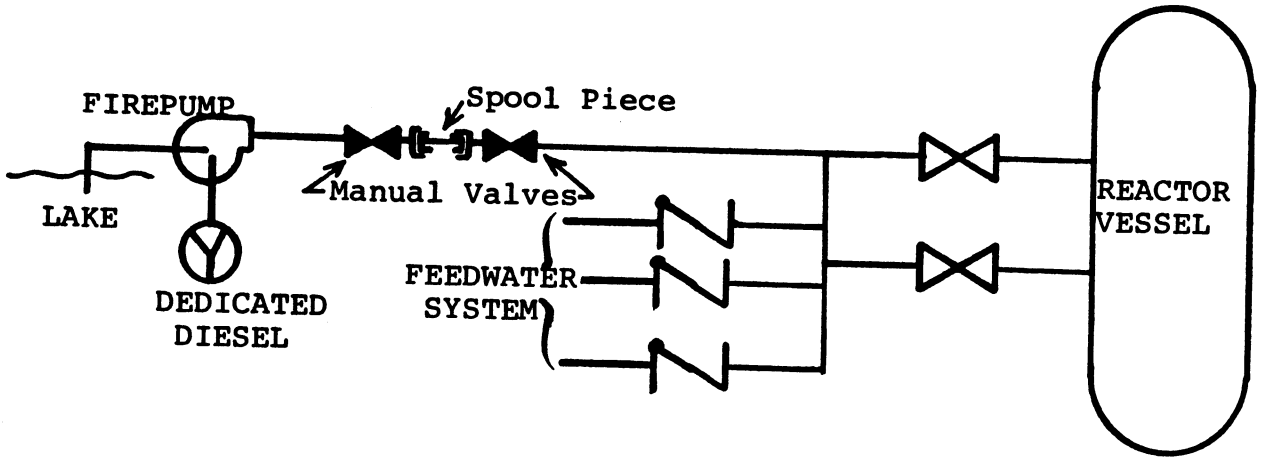

FIGURE B-17. SIMPLIFIED DIAGRAM OF MANUAL FEEDWATER COOLANT INJECTION SYSTEM

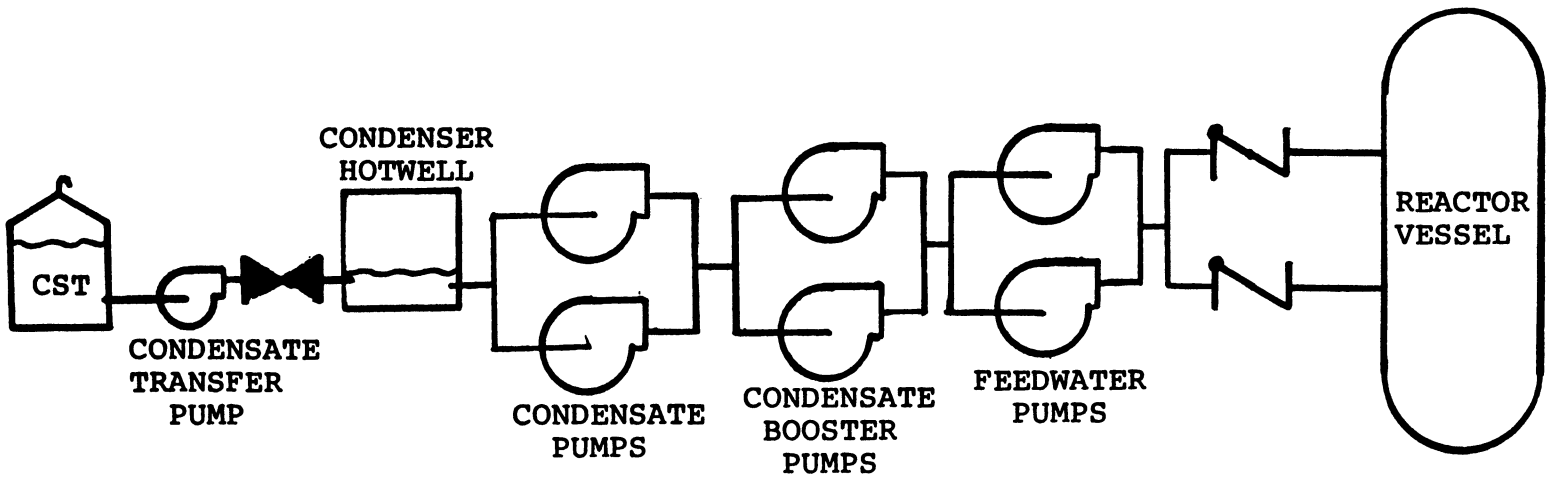

FIGURE B-18. SIMPLIFIED DIAGRAM OF AUTO FEEDWATER COOLANT INJECTION SYSTEM

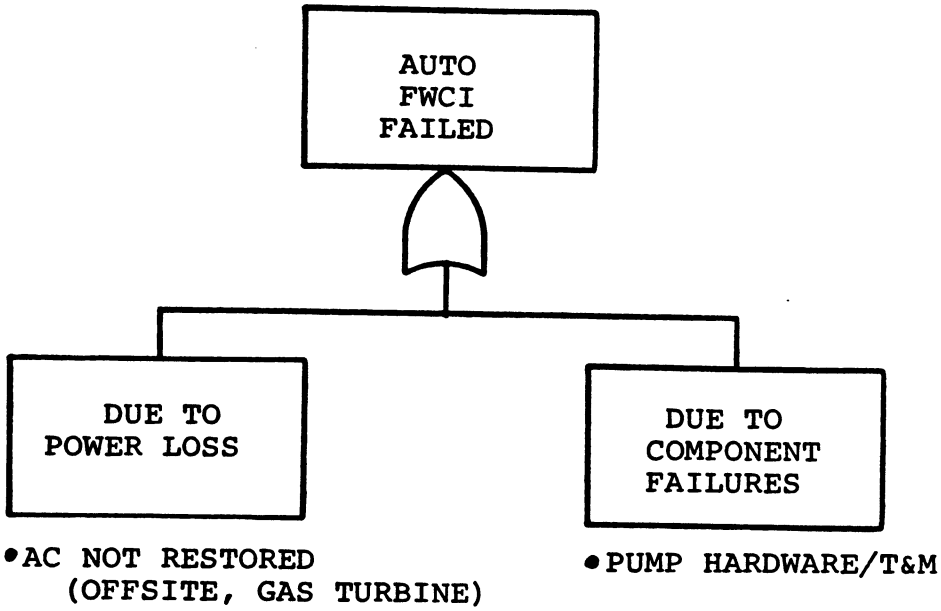

FIGURE B-19A. AUTO FWCI MAJOR FAULT MODES

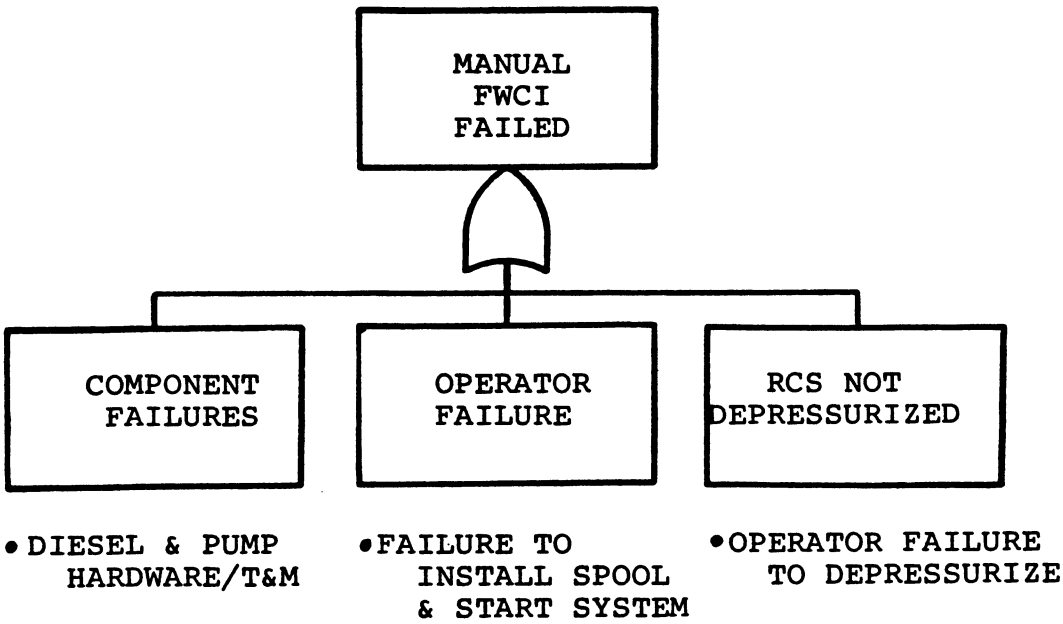

FIGURE B-19B. MANUAL FWCI MAJOR FAULT MODES

4. Isolation Condenser (BWR-2,3 Designs)

a. Introduction

The isolation condenser in older BWR designs serves as the primary heat removal system whenever the PCS is isolated or otherwise unavailable. The isolation condenser is a passive system in that it operates by natural circulation. Opening of a single condensate return valve and a continued shell side water supply are required to initiate and maintain operation of the condenser system. Figure B-20 represents the possible variations in isolation condenser designs.

b. System Description

(1) Base configuration

- 1 condenser train.
- Auto start on high reactor pressure or low reactor water level opens DC return-line valve.
- Can be operated manually from the control room.
- Initially needs only DC power to operate.
- For continuous operation, needs shell-side water in ~1 hour after the initiating event.
- Shell-side water comes from CST transfer pump (on emergency AC) or dedicated diesel-driven fire pump with indefinite water supply.
- May not adequately operate under stuck-open SRV conditions.
- Plants are allowed to operate when condenser is unavailable at reduced power for extended periods.

(2) Significant alternate configurations

(a) Configuration A-1

- 2 isolation condensers.
- Either condenser sufficient for success.

(b) Configuration A-2

- 2 isolation condensers.
- Additional gravity feed tanks.
- Either condenser sufficient for success.

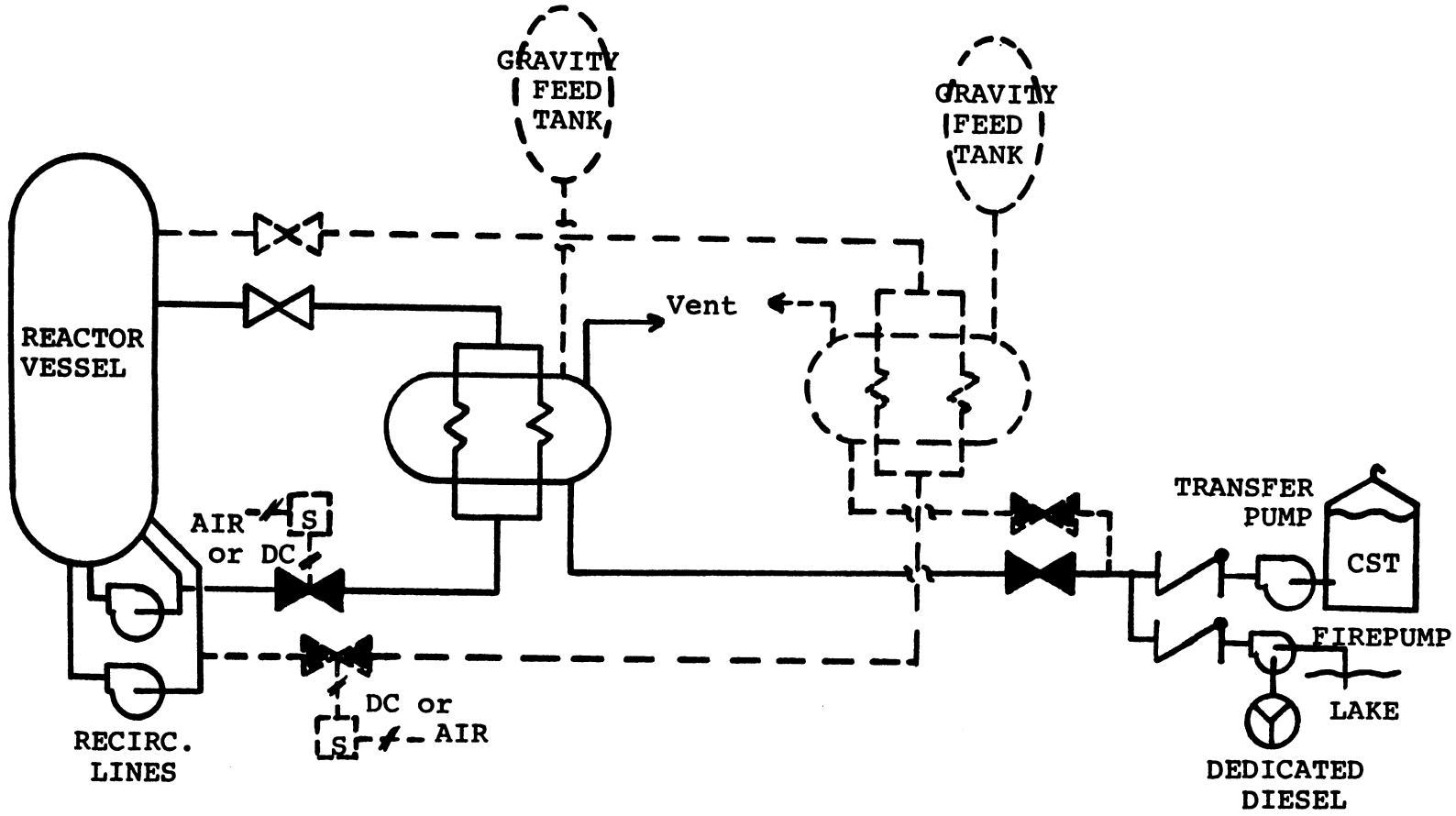

FIGURE B-20. SIMPLIFIED DIAGRAM OF TYPICAL ISOLATION CONDENSER DESIGN
(Dotted lines indicate major alternate designs)

(3) Possible sensitivities

Sensitivity	Applicable Configurations
DC return valves, motor or air operated: air fail open on loss of DC power	All
1 or 2 fire pumps	Base, A-1
AC or DC shell-side water valves	Base, A-1
Shell-side water availability:	
1/2 to 1-1/2 hrs. (in each condenser)	Base, A-1
7 hrs.	A-2
CST supply, 8-40 hrs.	All

c. Major Fault Modes

See Figure B-21.

5. High-Pressure Core Cooling (BWR 3-6 Designs)

a. Introduction

The HPCI and RCIC systems make up the high-pressure core cooling function for most of the modern BWR designs while the HPCS/RCIC combination represents the latest design for BWR-5s and 6s. In addition, the CRD system is capable of a relatively small amount of RCS cooling and makeup, but is not considered in our analyses for the reasons previously expressed. These systems can supply both interim cooling (by removing heat from the core to the suppression pool) and RCS makeup. HPCI and RCIC both work on a steam-driven principle while HPCS is motor-operated using its own dedicated diesel and DC supply for control. Figures B-22 and B-23 schematically represent these systems.

b. System Description

(1) Base configuration

(a) HPCI/RCIC systems

- Each system is a single train with a turbine-driven pump.
- Either system sufficient for success.
- Flow capacities ~5000 gpm for HPCI and ~600 gpm for RCIC.

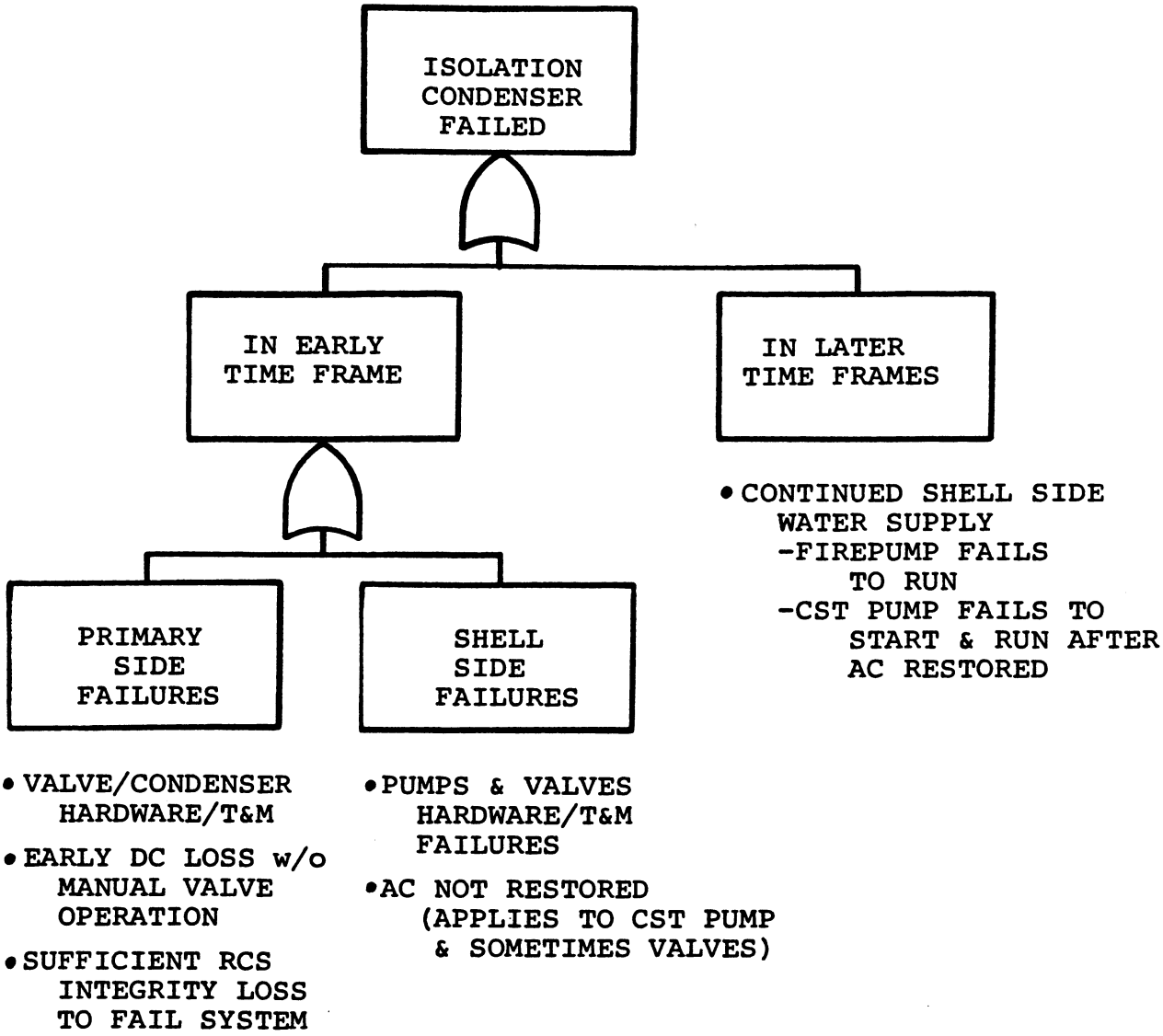

FIGURE B-21. ISOLATION CONDENSER MAJOR FAULT MODES

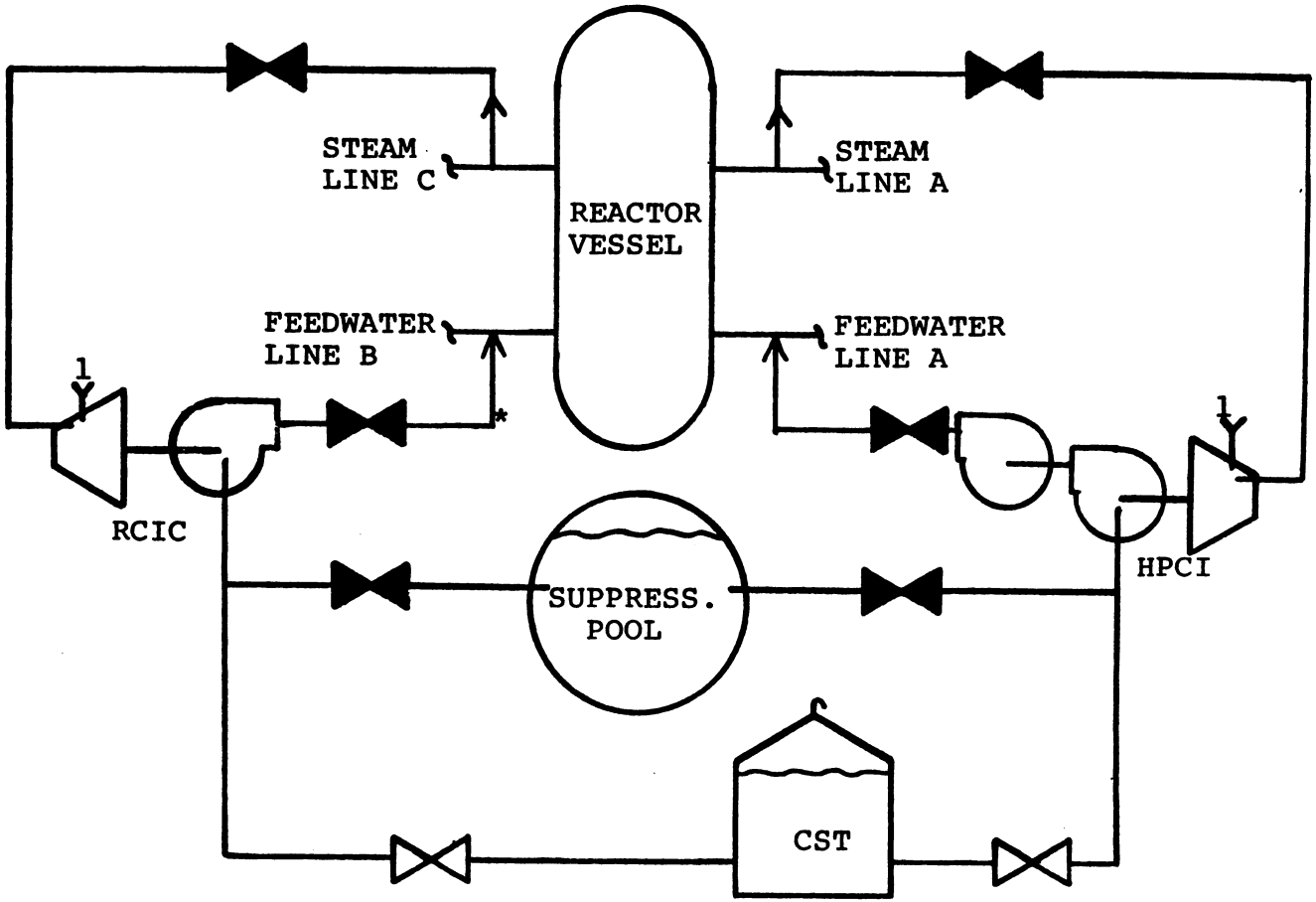

1 Pump Room Ventilation (AC)

* Could go to sparger on BWR 5s & 6s

FIGURE B-22. SIMPLIFIED DIAGRAM OF TYPICAL HPCI/RCIC SYSTEMS

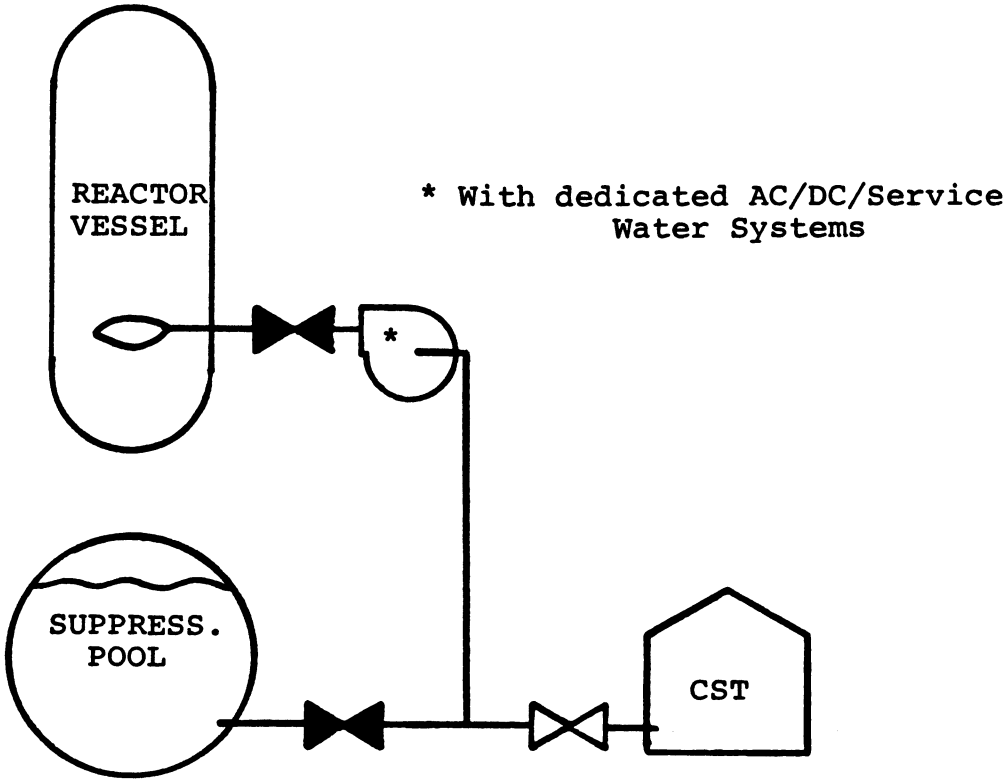

FIGURE B-23. SIMPLIFIED DIAGRAM OF HPCS

- HPCI automatically operates on low reactor water level or on high drywell pressure. RCIC automatically operates on low water level.
- Both systems can be manually operated from the control room.
- Each system needs only DC power to operate. HPCI and RCIC are on different DC buses.
- Pumps are self-cooled and lubricated.
- Both systems use the CST as first water source and then the suppression pool when CST level is low.
- Pump rooms appear to require ventilation by the intermediate time frame to avoid system isolation on high temperature.
- Pumps have a number of typical trips: high reactor water level, high room temperature, low steam pressure, high steam flow or pressure spike, high turbine discharge pressure.
- RCIC systems used to require manual actions for restarts and switching over to the suppression pool (HPCI is automatic). Based on References 29, 37, and 52, these functions will be automatic in the future.
- Based on Reference 52, design changes are being made to decrease the susceptability to high steam flow trips when systems first start.

(b) HPCS/RCIC systems

- RCIC is the same as above except that it may use a spray sparger.
- HPCS is a motor-driven system using dedicated diesel, service water cooling, and DC power systems.
- If a high drywell pressure signal exists, HPCS does not trip on high reactor water level; HPCS requires manual shutdown.
- HPCS is similar to HPCI except that it is not vulnerable to steam system trips nor apparently to a room ventilation problem.

(2) Significant alternate configurations

None.

(3) Possible sensitivities

Sensitivity	Applicable Configurations
Systems do or do not operate after ~ 2 hours with stuck-open SRV	HPCI, RCIC
Systems do or do not trip due to room ventilation effects	HPCI, RCIC
Vary the timing for ventilation or DC power loss effects	HPCI, RCIC
System can or cannot be run manually (locally) even after DC power loss	HPCI, RCIC
Systems throttled vs. not throttled (can affect no. of demands)	HPCI, RCIC, HPCS
CST water supply failure times	HPCI, RCIC, HPCS
Pumps do or do not fail on transfer to suppression pool	HPCI, RCIC, HPCS
Systems are or are not normally transferred to suppression pool manually before required.	HPCI, RCIC, HPCS

c. Major Fault Modes

Figures B-24 and B-25 show the potential dominant failure modes for HPCI, RCIC, and HPCS.

6. Automatic Pressure Relief (BWR 2-3) and Automatic Depressurization (BWR 3-6) Systems

a. Introduction

The APRS and ADS are different names for essentially the same type of system. These systems consist of the SRVs and the associated DC control logic for automatic or manual depressurization of the primary system whenever high pressure injection fails to maintain adequate cooling

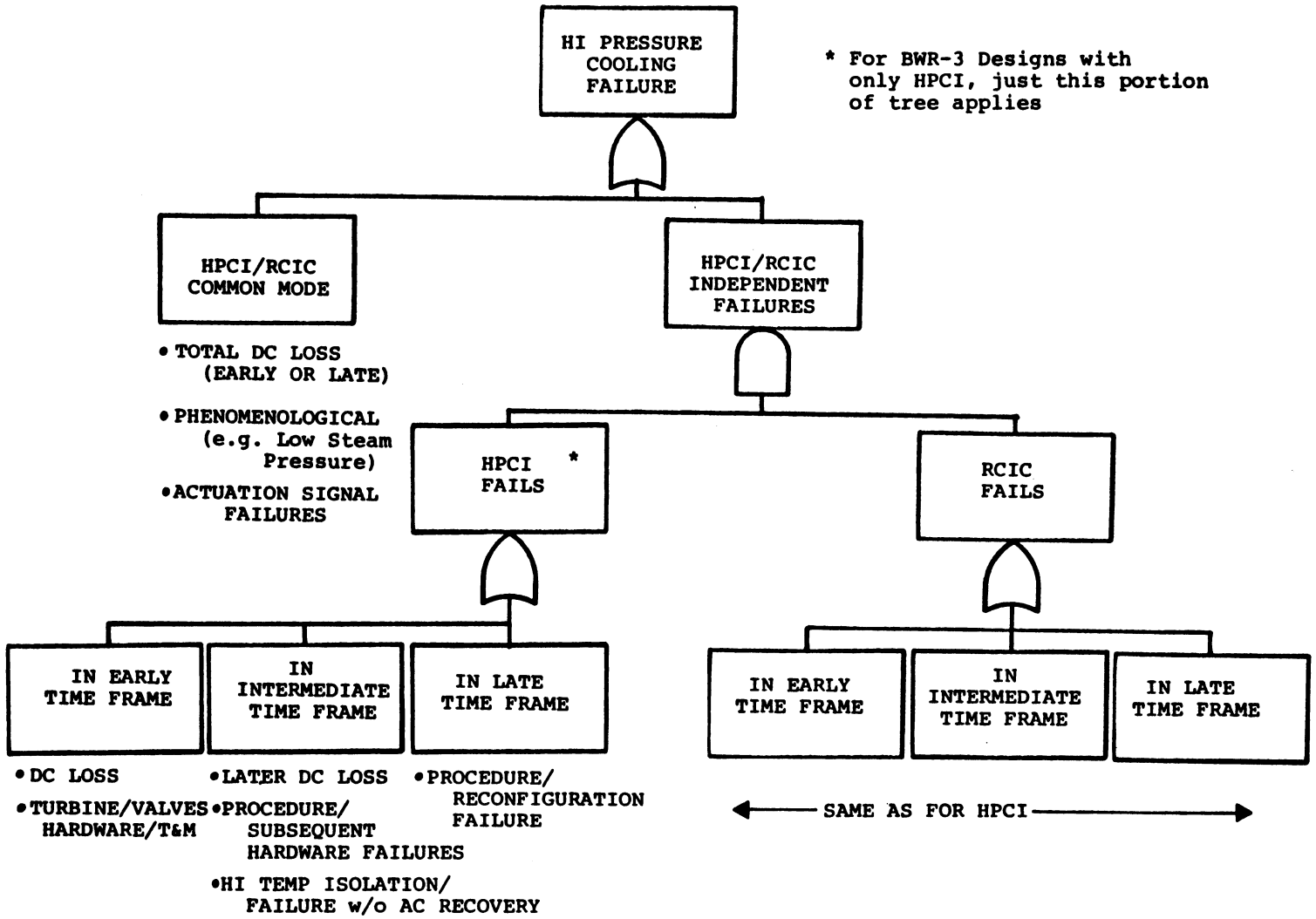

FIGURE B-24. HPCI/RCIC MAJOR FAULT MODES

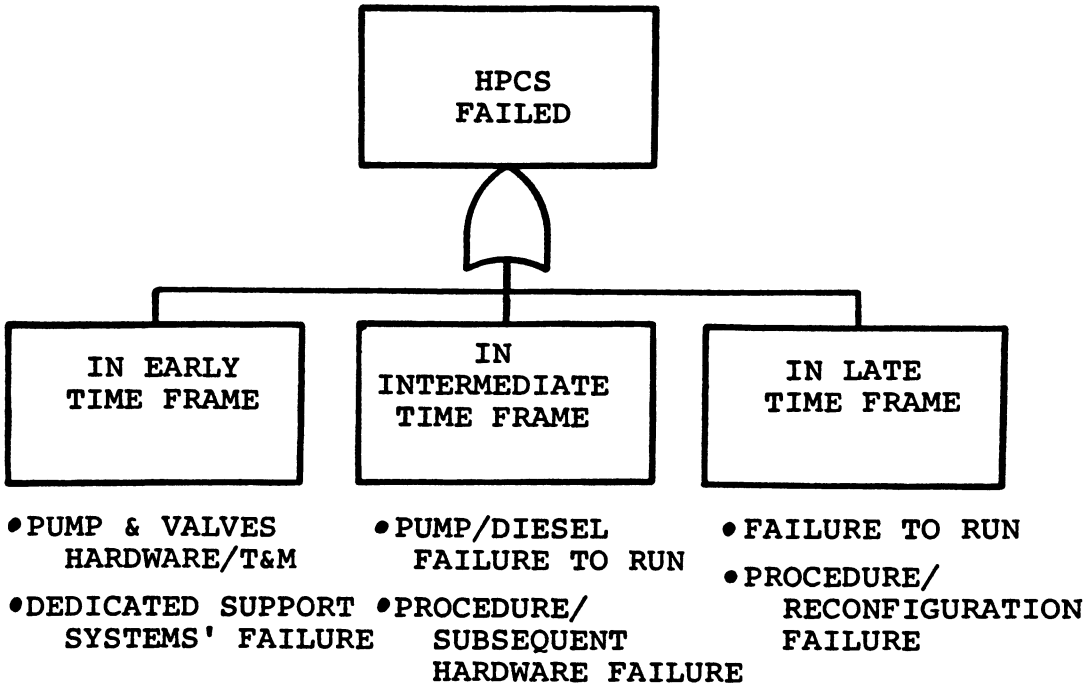

FIGURE B-25. HPCS MAJOR FAULT MODES

and/or inventory makeup. Such action allows operation of low pressure cooling systems. Typically, only a few of the available APRS/ADS valves are required to open for success. Figure B-26 represents a typical APRS/ADS valve arrangement.

It should be noted that in the case of a station blackout event, operation would most likely require manual action since conditions would not be right for successful automatic initiation. This is because automatic initiation requires a low-low water level signal concurrent with a high drywell pressure and a low-pressure pump running. Even with AC power restored in order to run a low-pressure pump, in a slowly depressurizing or non-depressurizing event such as station blackout, automatic initiation could come too late to prevent core uncovery and possible core damage. Thus, only manual action within 10-30 minutes following loss of high-pressure cooling appears to be a successful mode of operation. Changes have been suggested which avoid the need for such manual action[29,69] but as of now, there is no indication that such changes are actually planned to be implemented.

b. System Description

(1) Base configuration

- Multi-valve design.
- Air accumulator capacity allows for ~5 valve operations.
- Operates automatically on low reactor water level and high drywell pressure and a low pressure system running.
- Remote-manual operation capability from control room.
- Either of two DC buses sufficient for system operation.

(2) Significant alternate configurations

None.

(3) Possible sensitivities

- High temperature environment in containment (~300°F) does or does not fail SRVs in the long term.

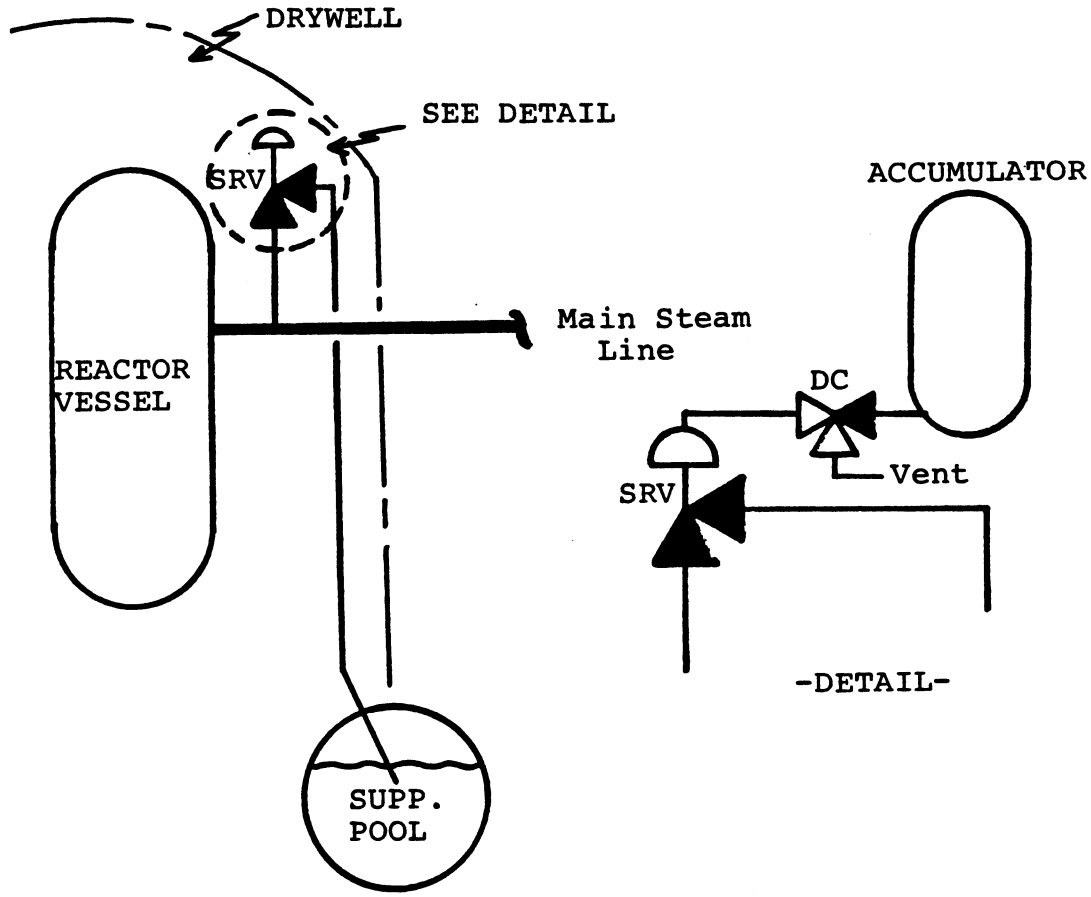

FIGURE B-26. SIMPLIFIED DIAGRAM OF TYPICAL APRS/ADS VALVE ARRANGEMENT

c. Major Fault Modes

See Figure B-27.

7. Low Pressure Core Cooling

a. Introduction

For the purposes of this study, the low-pressure, core cooling function encompasses those systems which can supply interim heat removal and makeup to the core, but cannot, by themselves, be used to remove heat to the ultimate heat sink. Primary system pressure must be less than ~250 psig in order for these systems to operate.

A number of configurations are used depending on plant vintage and design variations. Figures B-28 through B-31 summarize these configurations.

b. System Description

(1) Base configuration

(a) LPCS only (Figure B-28-BWR 2 design)

- 4-100% trains each with 2 pumps.
- Any 1 train sufficient for success.
- Auto start on low water level or high drywell pressure with low RCS pressure.
- Remote-manual start capability from control room.
- Logic is DC power while pump and valve power are offsite/emergency AC.
- Support systems such as pump cooling and room ventilation use same AC/DC power.

(b) LPCS/LPCI combination (Figures B-29, B-30-BWR 3 through 5 designs)

- 4 to 6-100% trains (2 for LPCS with 1 or 2 pumps each and 2 or 4 for LPCI with 1 or 2 pumps each).
- Any 1 train sufficient for success.
- Other features like LPCS described above.

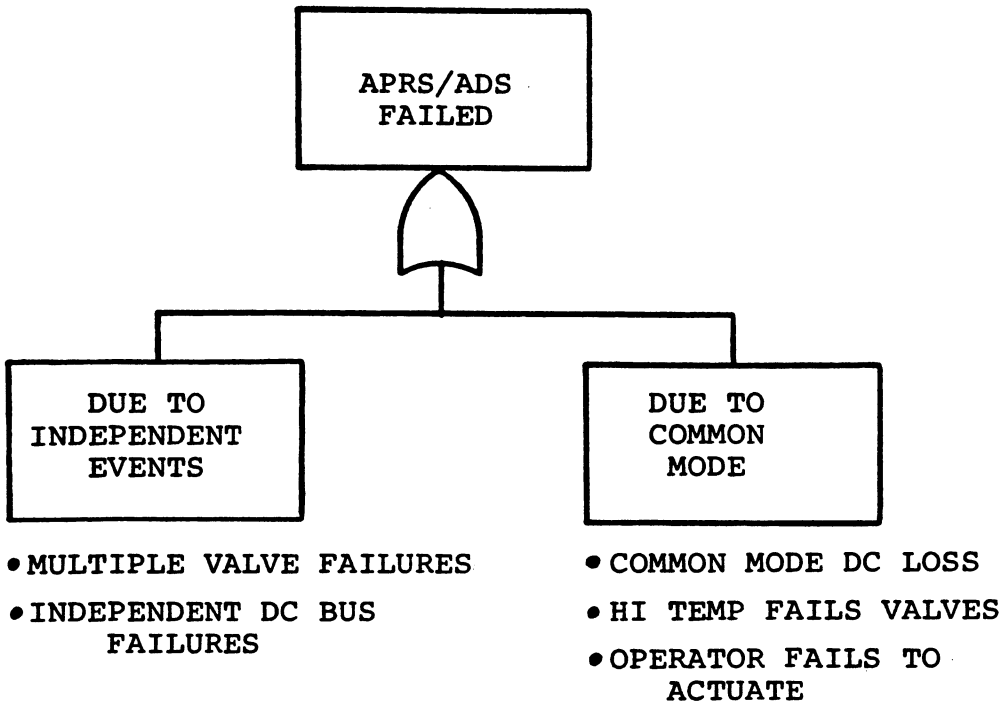

FIGURE B-27. APRS/ADS MAJOR FAULT MODES

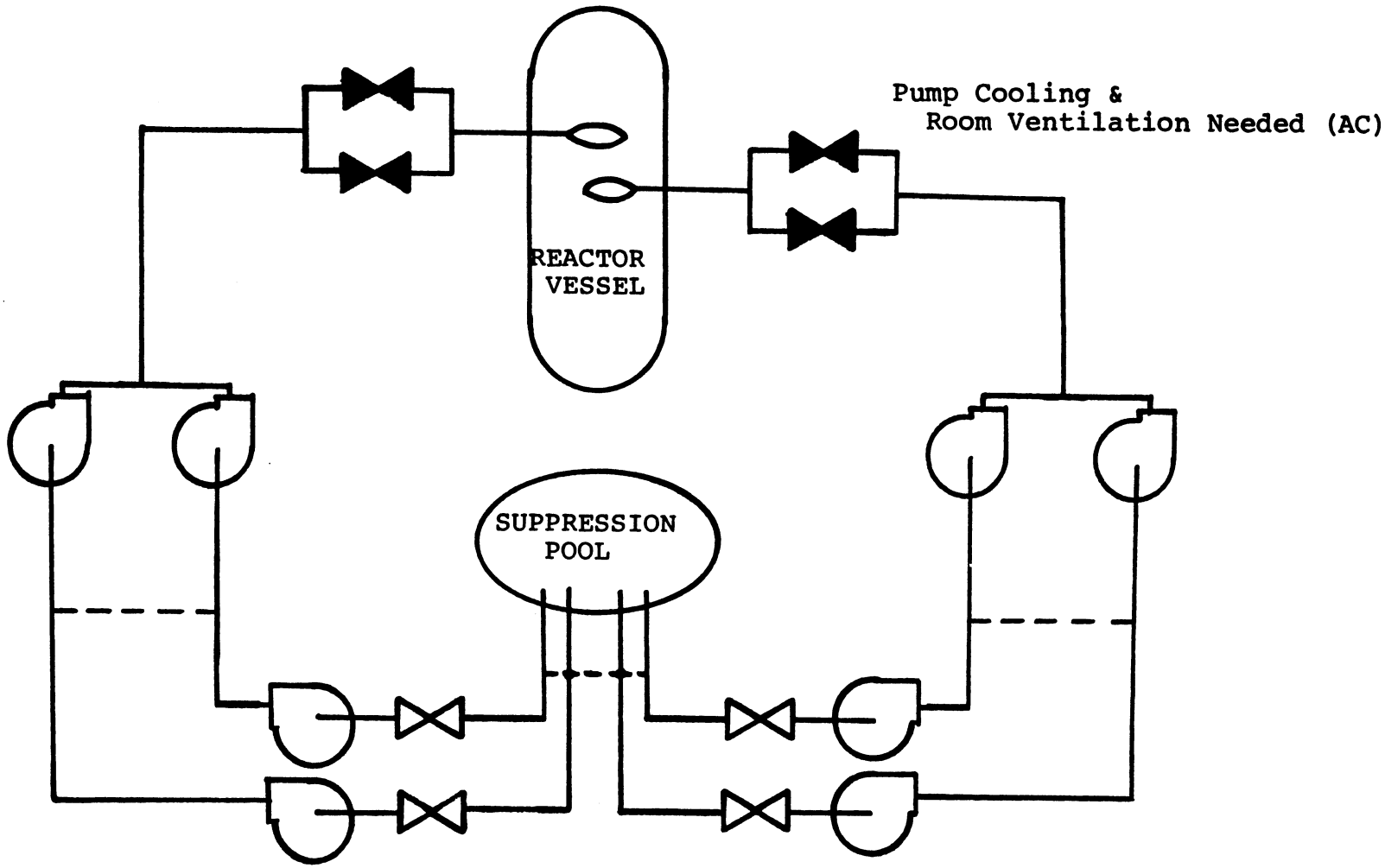

FIGURE B-28. SIMPLIFIED DIAGRAM OF TYPICAL LPCS (EARLY DESIGNS)
(Dotted lines indicate cross-ties in some designs)

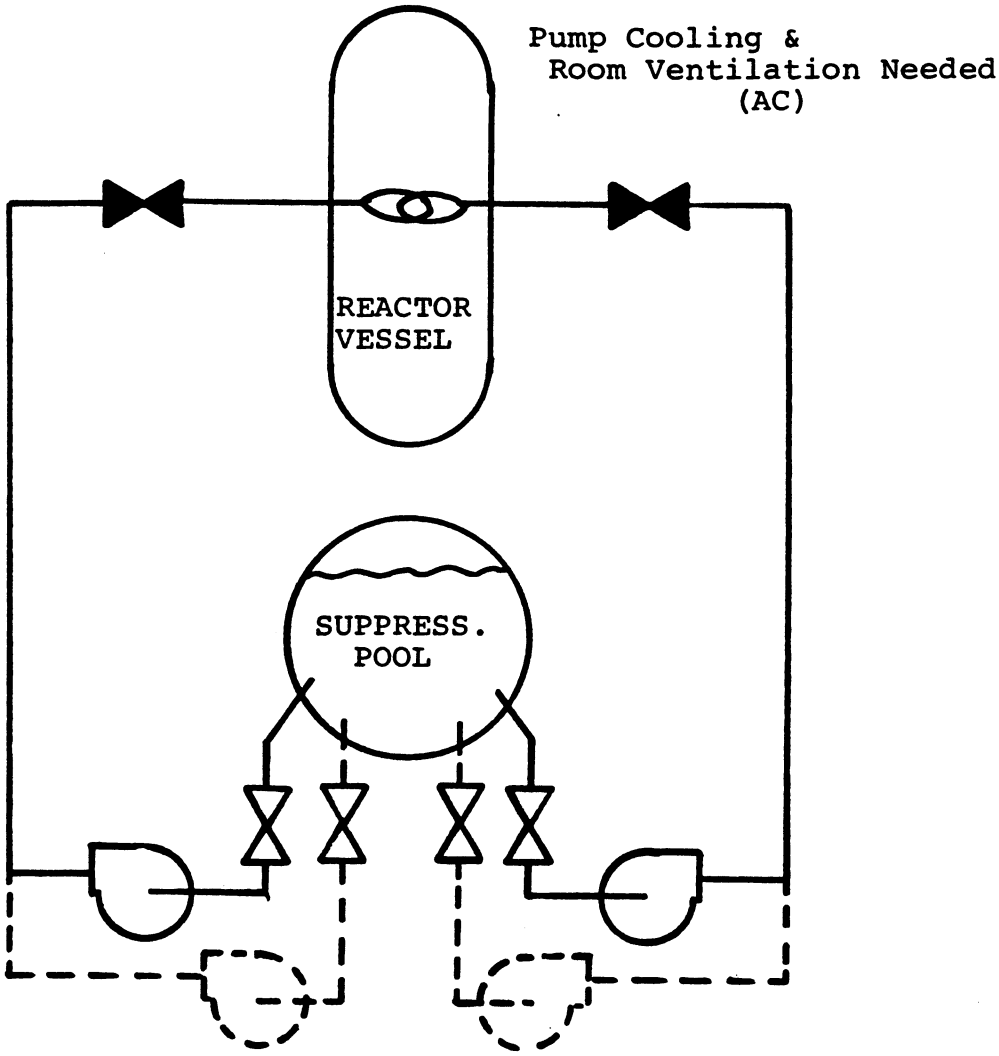

FIGURE B-29. SIMPLIFIED DIAGRAM OF TYPICAL LPCS (LATER DESIGNS)

(Dotted portions indicate possible additional trains on some plants)

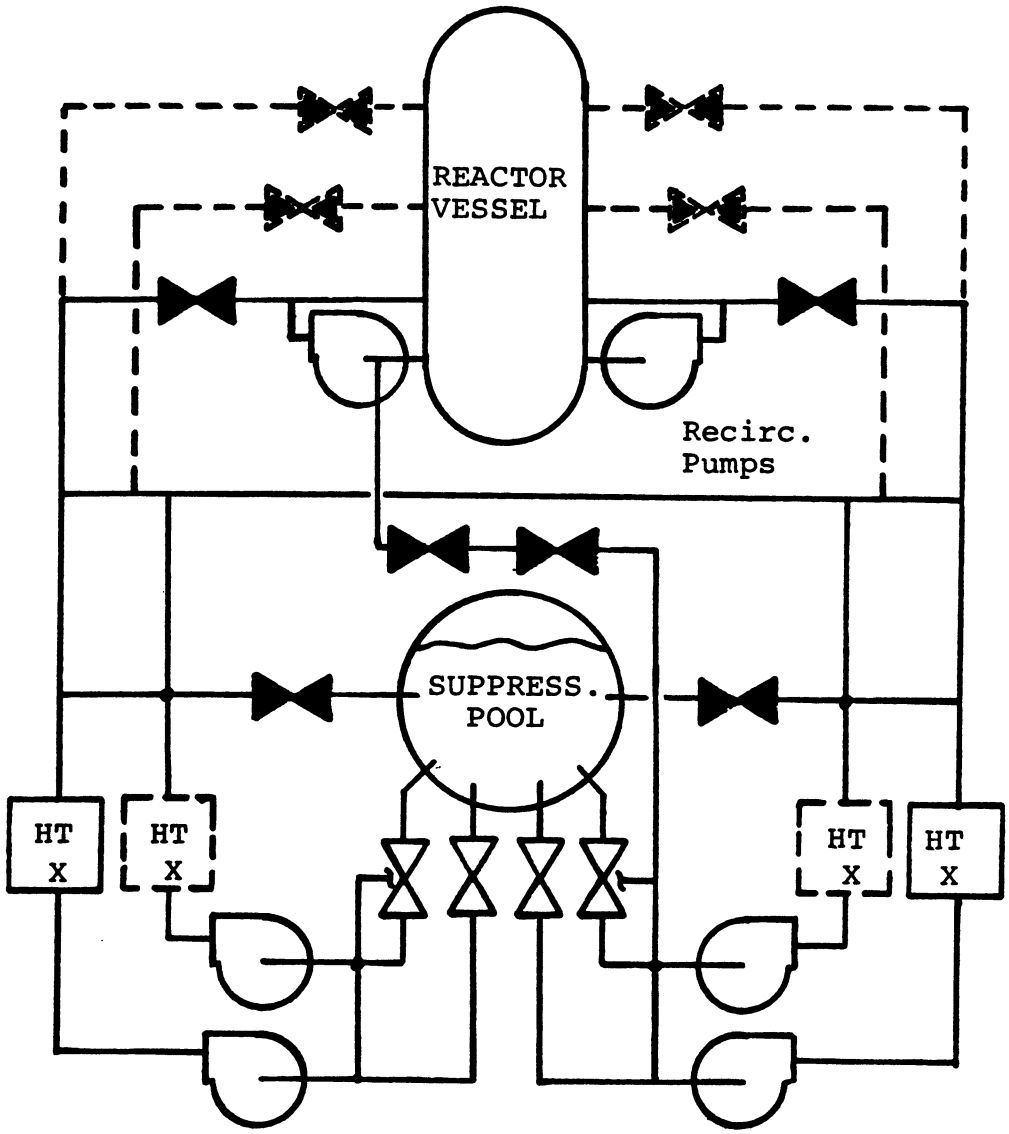

-Pump Cooling & Room Ventilation Needed (AC)
-Service Water also Needed for Heat Exchangers (AC)
(LPCRS mode)

FIGURE B-30. SIMPLIFIED DIAGRAM OF TYPICAL LPCI/LPCRS
(Dotted portions indicate major alternate designs)

(c) LPCS/LPCI combination (Figure B-31-BWR 5 and 6 design)

- 4-100% trains (1 for LPCS and 3 for LPCI).
- Any 1 train sufficient for success.
- Other features like LPCS described above.

(2) Significant alternate configurations

(a) LPCS only design

- There may exist a cross-connect to a dedicated diesel fire pump which injects through LPCS lines (the point of connection is unknown so it is not shown on Figure B-28); we believe the connection is upstream of the isolation valves and thus requires manual valve operation).

(b) LPCS/LPCI combinations (all BWRs)

- Total number of pumps and flow paths do vary. However, in all cases, at least 2 pumps and independent flow paths exist even if only 1 division of AC power is restored. Therefore, no significant variations appear to exist since recovery of AC power will most likely dominate ability to operate these systems.

(3) Possible Sensitivities

None.

c. Major Fault Modes

See Figure B-32.

8. <u>Ultimate Heat Removal and/or Makeup</u>

a. Introduction

This function is covered by those low pressure systems that, in conjunction with a cooling water supply through heat exchangers, can remove decay heat to the ultimate heat sink. All are low pressure systems which operate at a primary system pressure of less than 250 psig.

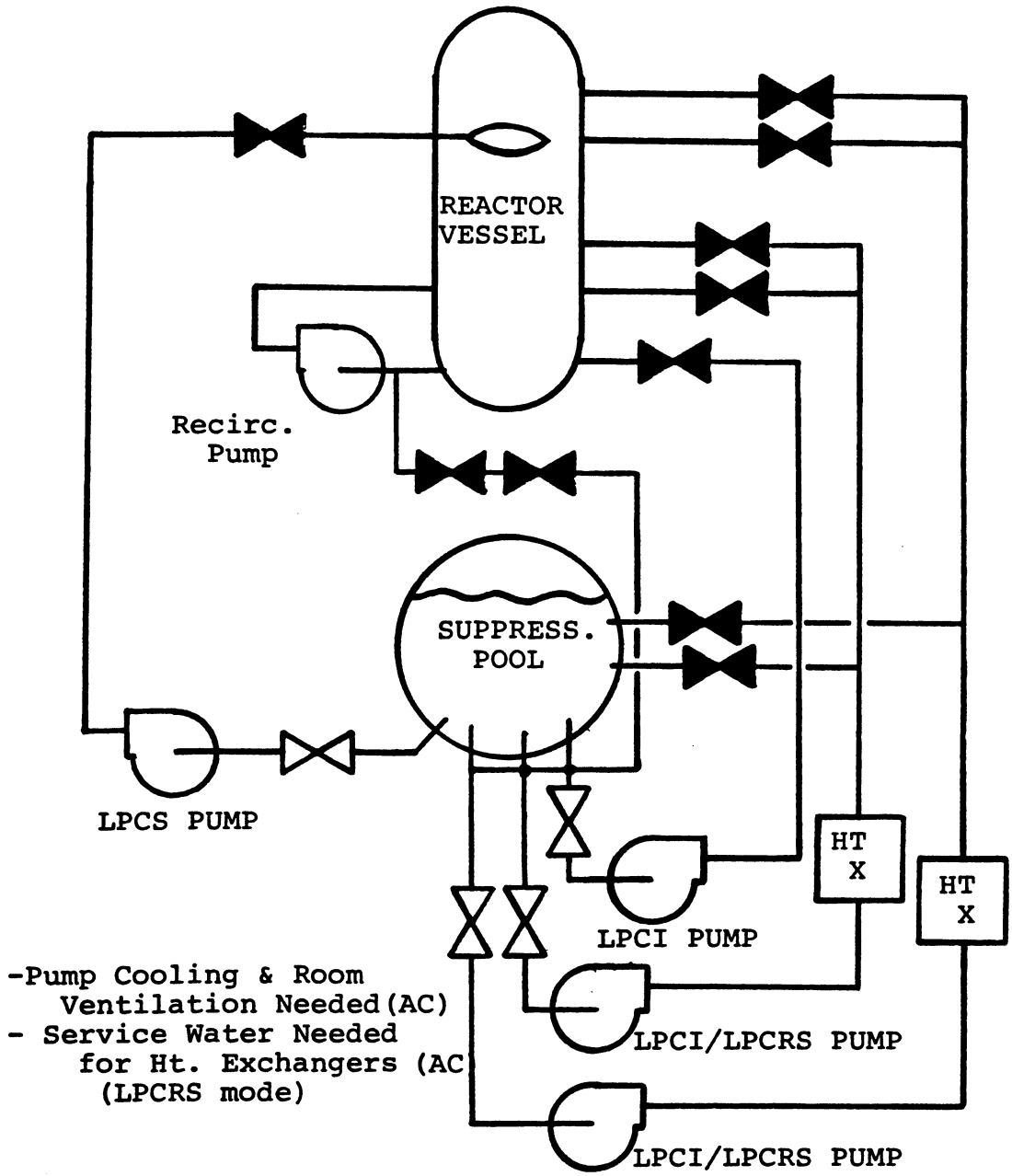

FIGURE B-31. SIMPLIFIED DIAGRAM OF TYPICAL LPCS/LPCI/LPCRS FOR BWR 5s & 6s

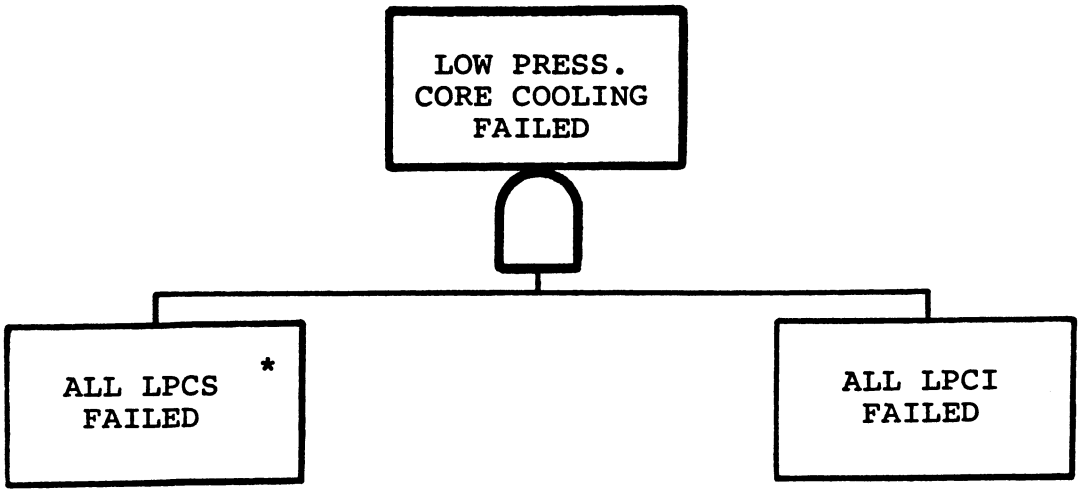

- AC NOT RESTORED
- COMBINATIONS OF HARDWARE/ T&M/POWER FAILURES IN LPCS OR ITS SUPPORT SYSTEMS

- LIKE LPCS

* For plants with LPCS only, just this portion of tree applies

FIGURE B-32. LPCS/LPCI MAJOR FAULT MODES

Figures B-30, B-31, B-33, and B-34 represent the possible systems and design configurations that are described below.

b. System Description

(1) Base configuration

(a) Containment spray/cooling system and 3-train SDCS combination (Figures B-33 and B-34-BWR 2 designs).

- 5-100% trains (3 for SDCS and 2 for spray system, each with 2 pumps and 2 heat exchangers.
- Any 1 train sufficient for success.
- SDCS manual only.
- Systems need a cooling water supply that is AC powered for heat removal to ultimate heat sink.
- All other features like LPCS described earlier.

(b) LPCRS and SDCS combination (Figures B-30 and B-34 for some BWR-3 designs)

- 4 or 5-100% trains (2 or 3 for SDCS and 2 for LPCRS, each with 2 pumps and 2 heat exchangers).
- Any 1 train sufficient for success.
- SDCS and LPCRS are manually configured.
- Other features like (a) above.

(c) LPCRS only (Figure B-30 for BWR 3&4 designs)

- 2 or 4-100% trains with either 1 or 2 pumps and 1 or 2 heat exchangers in each train.
- Any 1 train sufficient for success.
- LPCRS manually aligned.
- Other features like above.

(d) LPCRS only (Figure B-31 for BWR 5&6 designs)

- 2-100% trains with 1 pump and 1 heat exchanger per train.
- Any 1 train sufficient for success.
- LPCRS manually aligned.
- Other features like above.

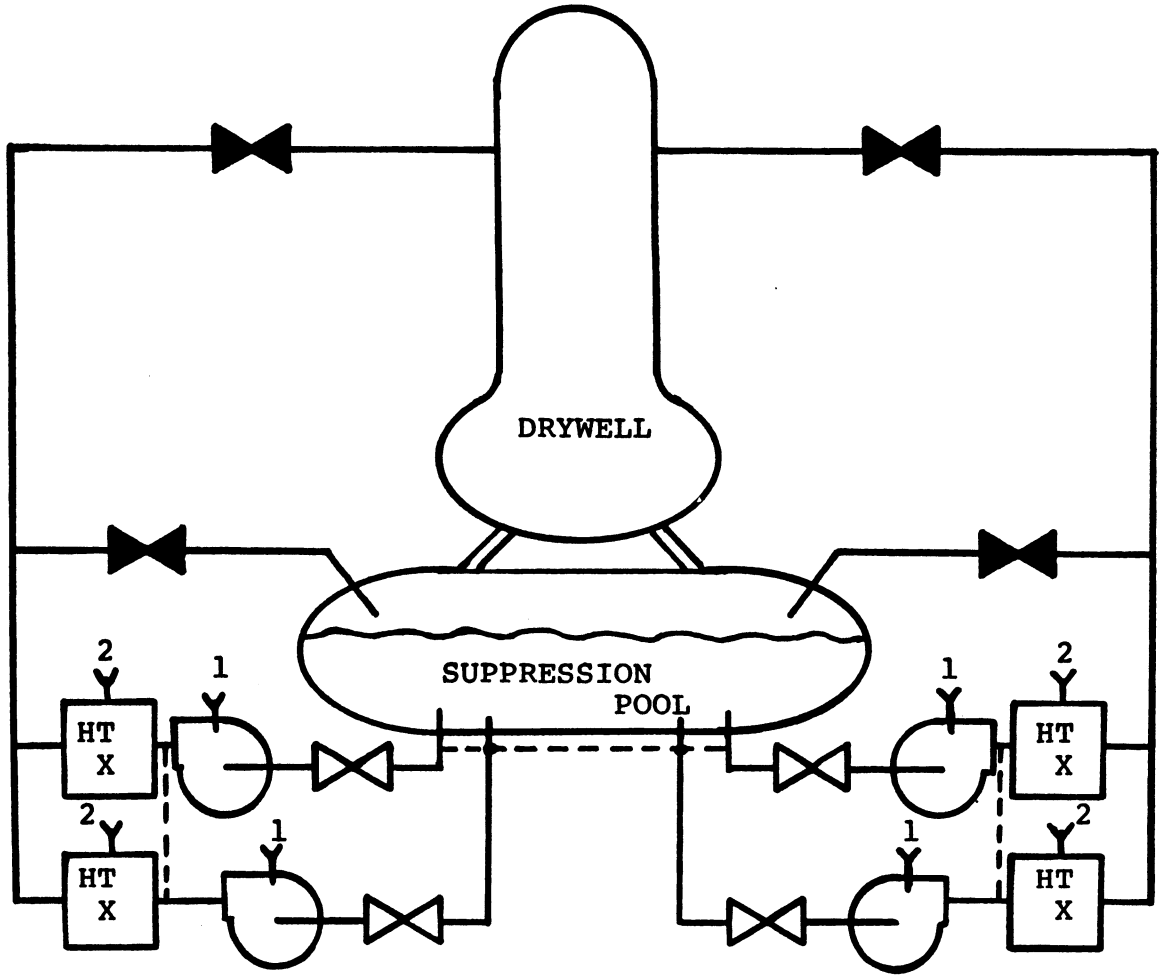

1 Pump & Room Cooling (AC)
2 Service Water (AC)

FIGURE B-33. SIMPLIFIED DIAGRAM OF TYPICAL CONTAINMENT SPRAY/COOLING SYSTEM

(Dotted lines indicate cross-ties in some designs)

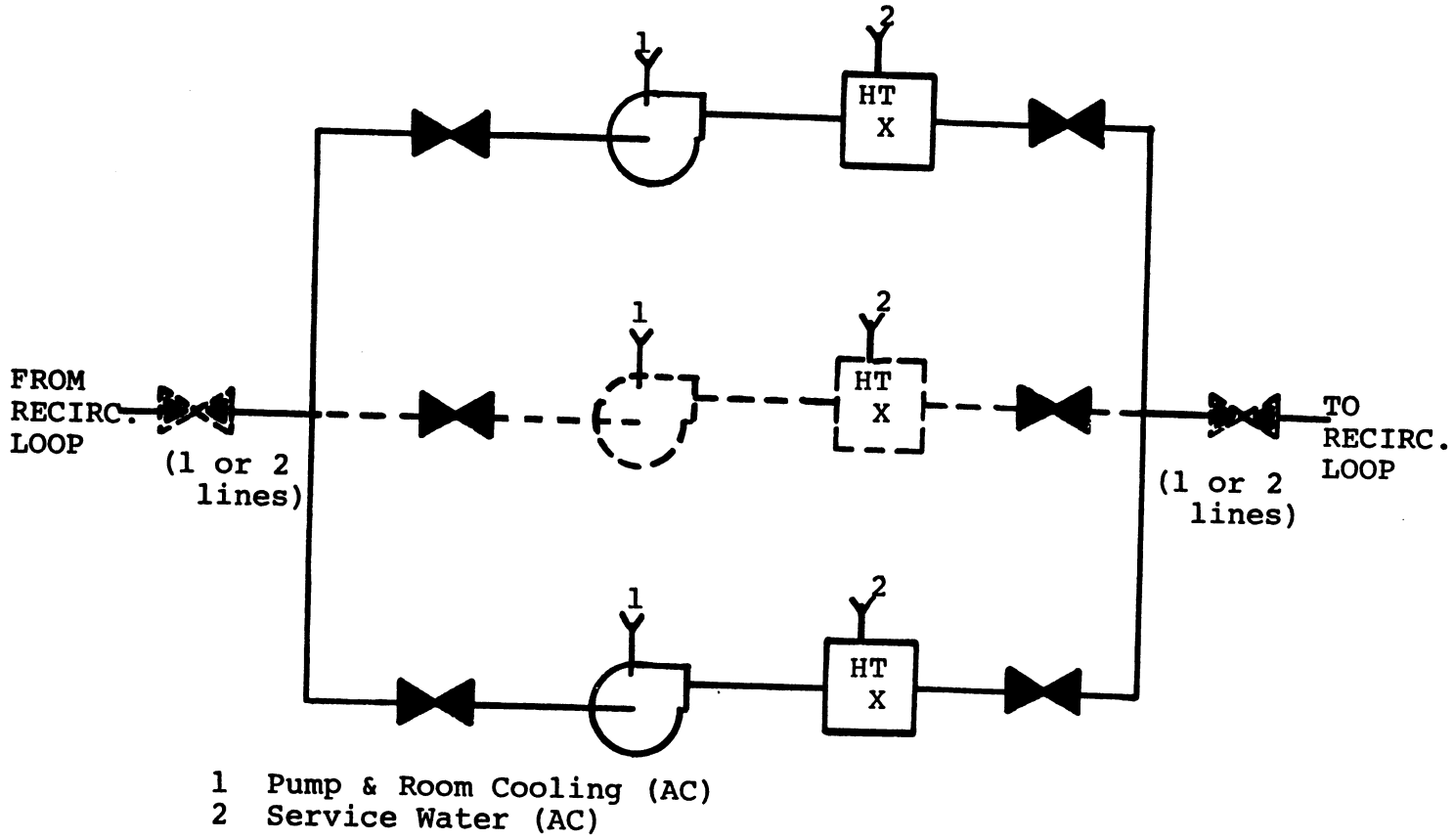

FIGURE B-34. SIMPLIFIED DIAGRAM OF TYPICAL SHUTDOWN COOLING SYSTEM
(Dotted portions indicate major alternate designs)

(2) Significant alternate configurations

- In all cases, the number of pumps, heat exchangers, and flow paths do vary. In the newer plants with "LPCRS only," cases exist where it will be possible to recover only 1 train of heat removal if only 1 division of AC power is restored. This represents the most limiting case; other configurations provide greater redundancy.

(3) Possible sensitivities

None.

c. Major Fault Modes

Figure B-35 depicts the potential dominant failure modes for SDCS, LPCRS, and containment spray/cooling.

9. Support Systems

These systems support almost all other systems and have been grouped together here.

a. Power

(1) Components may be on AC, DC, or AC/DC power. This power may be emergency or normal.

(2) In general, the components in the following systems are on emergency power: Isolation Condenser, FWCI, HPCI, RCIC, HPCS, ADS/APRS, LPCS, LPCI, Containment Spray, LPCRS, isolation, ventilation, lubrication and cooling for these systems. SDCS can also be put on emergency power in most cases.

(3) AC power

- AC power configurations are being modeled explicitly by ORNL as part of the station blackout program.
- Offsite -- treated with a certain probability of recovery per unit time.
- Emergency Diesel Generators -- feed two or more trains of emergency power. Configurations covered in work done by ORNL.

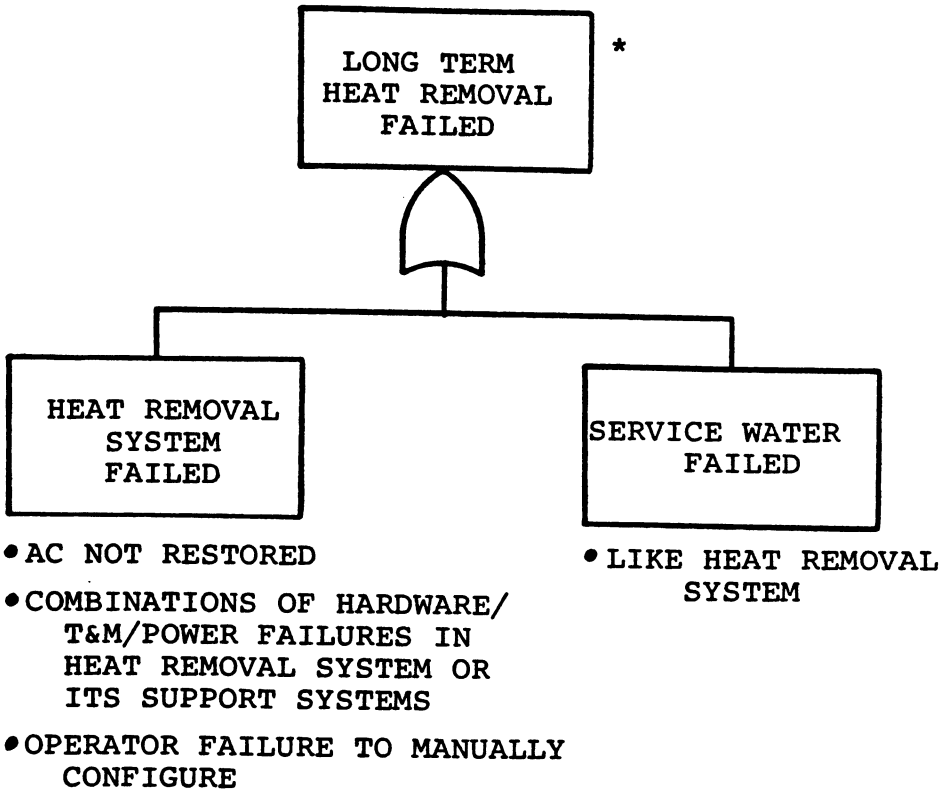

* Tree applies to Containment spray/cooling System, LPCRS, and Shutdown Cooling System. All trains of all systems for a specific plant design must fail.

FIGURE B-35. LONG-TERM HEAT REMOVAL MAJOR FAULT MODES

(4) DC power

- Typically, two batteries feed two trains.
- There may be additional batteries dedicated to particular systems such as diesel generators, gas turbines, or HPCS.
- Partial or total failure of the DC power system may be the cause of the station blackout.
- Unless AC power is recovered, the battery will be depleted within a few hours; with appropriate load stripping this might be extended considerably.
- The batteries could fail due to overheating of the battery room without any AC-powered ventilation. Limited available information suggests that adequate ventilation may be achieved by opening the doors for natural circulation.

b. Ventilation

With the possible exceptions of HPCI, RCIC, ADS, and battery rooms, ventilation does not appear crucial during the blackout. When AC power is restored, most likely ventilation will be restored also. For those systems which will be operating during the blackout, the ventilation requirements are discussed under their descriptions. Ventilation does not appear to be a problem for areas such as the control room, switchgear room, logic cabinet spaces, and sensor locations. Natural circulation appears adequate in these areas, especially when enhanced by opening doors, etc.

c. Cooling Water

The cooling water (or service water) systems vary considerably in design, but can be modeled (on the average) like any other typical AC system utilizing several motor pumps and multiple paths. This system is required for operation of such systems as LPCS, LPCI, LPCRS, Containment Spray, and long-term ventilation.

d. Lighting

There appears to be adequate DC lighting in all important areas; this lighting will last as long as the batteries.

e. Indications

Under blackout conditions, and in light of requirement I.D.2 in NUREG-0737[37] as well as observations made

on plant visits and in other studies, it appears that for as long as DC power lasts, adequate instrumentation, indication, and alarm status will exist for the operator to determine plant and system status. Such indications would include RCS level and pressure, emergency cooling flow, CST level, suppression pool temperatures, among others.

f. Miscellaneous

Based on plant visits and extensive review, it appears at least one train of support features is always on the same AC/DC division as the corresponding safety system which they support. For example, AC Division 1 LPCI pump uses cooling water from the AC Division 1 cooling system. This type of design has been assumed in our analyses.

Appendix C

Fault Trees

Figures

			Page
C-1	PWR:	High Pressure Makeup Fault Tree.....	168
C-2	PWR:	RCS Integrity Loss Fault Tree.....	182
C-3	PWR:	Auxiliary Feedwater Fault Tree.....	188
C-4	PWR:	RCS Integrity Loss Fault Tree.....	185
C-5	BWR:	Isolation Condenser Fault Tree.....	189
C-6	BWR:	HPCI/RCIC Fault Tree.....	205
C-7	BWR:	APRS/ADS Fault Tree.....	209
C-8	BWR:	Auto FWCI Fault Tree.....	210
C-9	BWR:	Manual FWCI Fault Tree.....	212

This appendix contains simplified representations of the detailed fault trees used to model the various systems important to the station blackout issue. The data discussed in Appendix E was applied to the primary events of these fault trees in order to quantify the various accident sequences.

It should be noted that the level of detail in the fault trees is usually down to the "train" level since this was sufficient in most cases for this study. Power dependencies, support features, and phenomenological concerns are separated out while all other hardware and test and maintenance contributions to failure are typically combined together. The reason for separating out these three is that they show up as: (1) common modes between systems, (2) common modes between systems and the initiating event, and/or (3) they may be sequence dependent. The other failure modes are local and sequence independent; so we generated typical failure probabilities for a train of a system in order to encompass design variations which were determined not to be significant in the analysis. Important human actions are also explicitly incorporated in the trees.

The trees presented here are somewhat simplified since they do not show the continued development of all the branches of the trees. Also, the AC-related events were actually further developed into offsite and onsite branches with DC power and service water support needs handled by substituting ORNL's AC failure equations into the events representing non-recovery of AC power.

Figure C-1

PWR
HIGH PRESSURE MAKEUP
(SHEET 1)

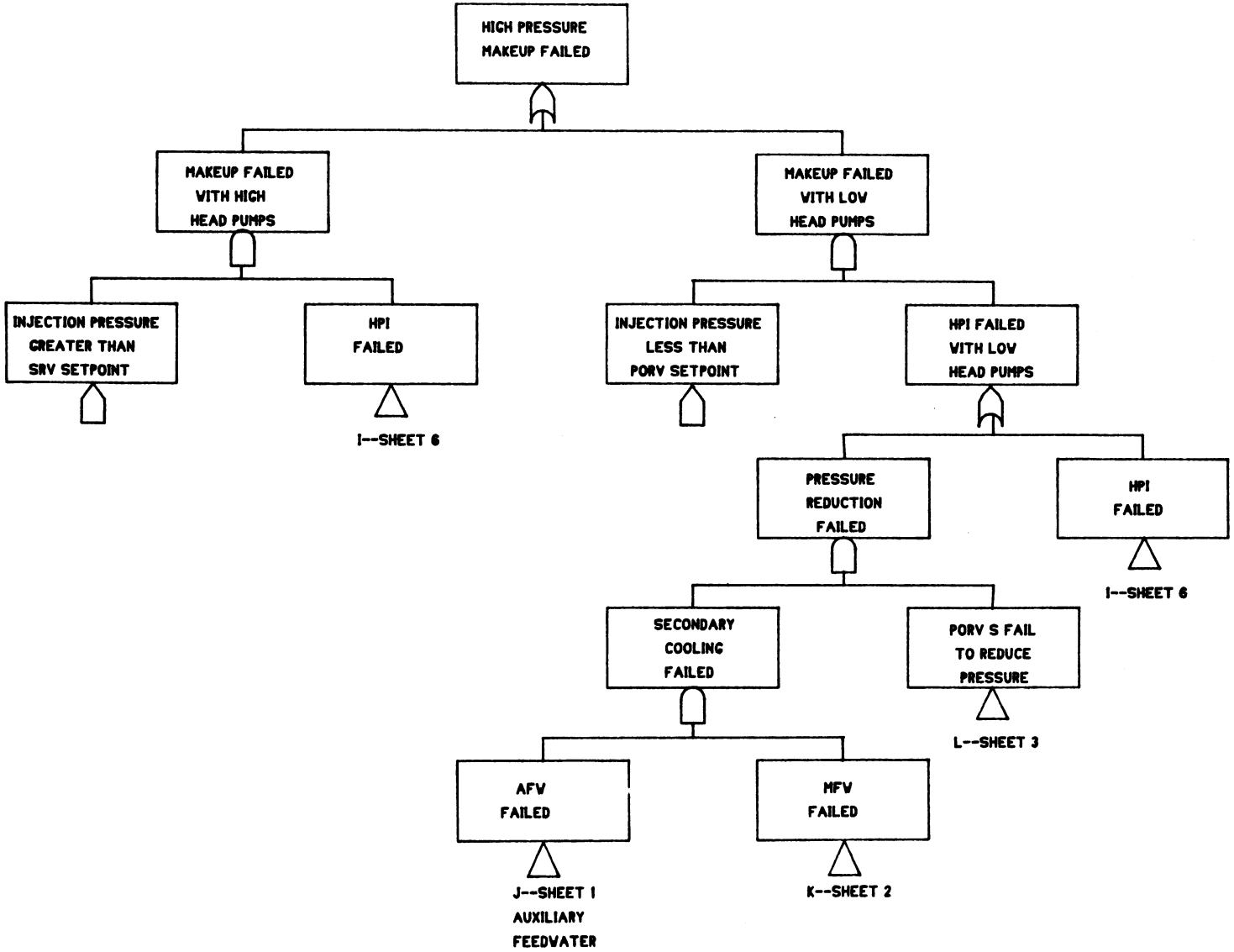

Figure C-1

PWR
HIGH PRESSURE MAKEUP
(SHEET 2)

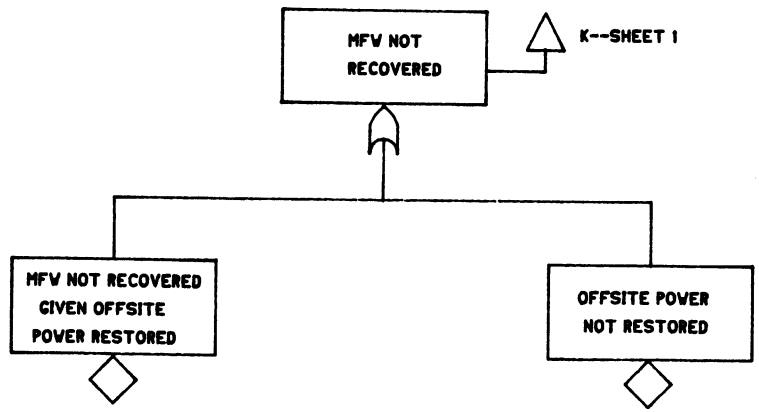

Figure C-1

PWR
HIGH PRESSURE MAKEUP
(SHEET 3)

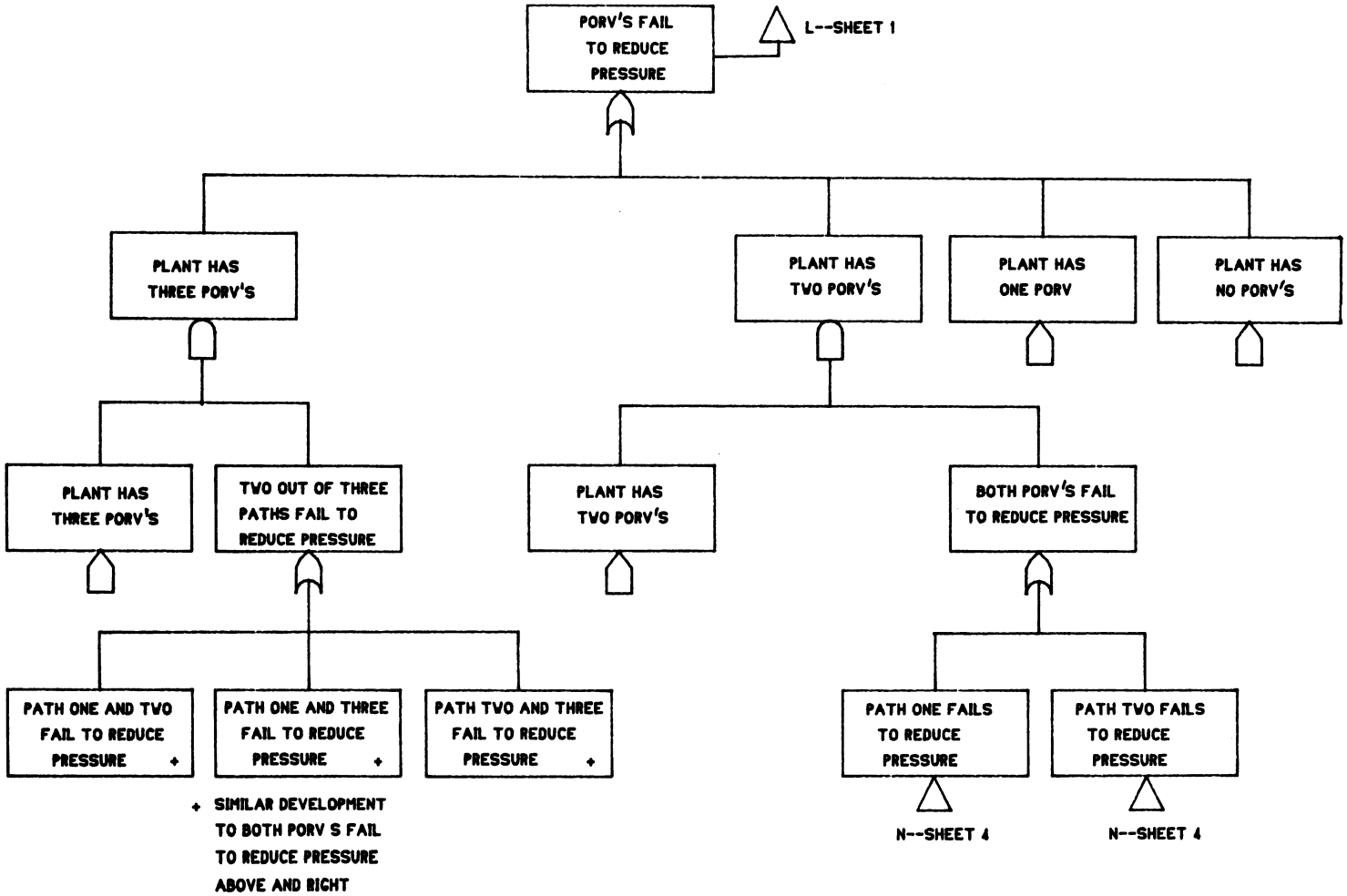

Figure C-1

PWR
HIGH PRESSURE MAKEUP
(SHEET 4)

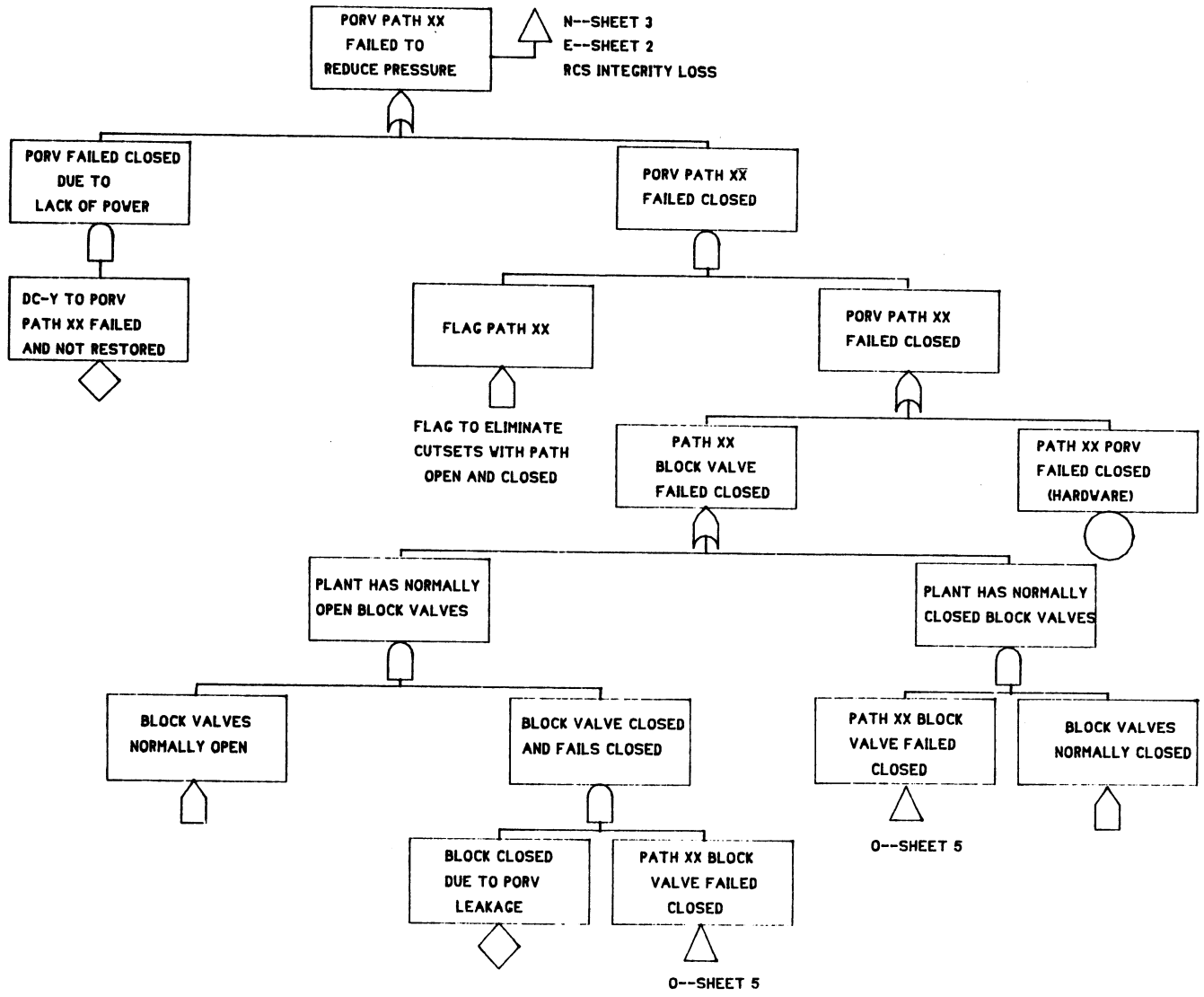

Figure C-1

PWR
HIGH PRESSURE MAKEUP
(SHEET 5)

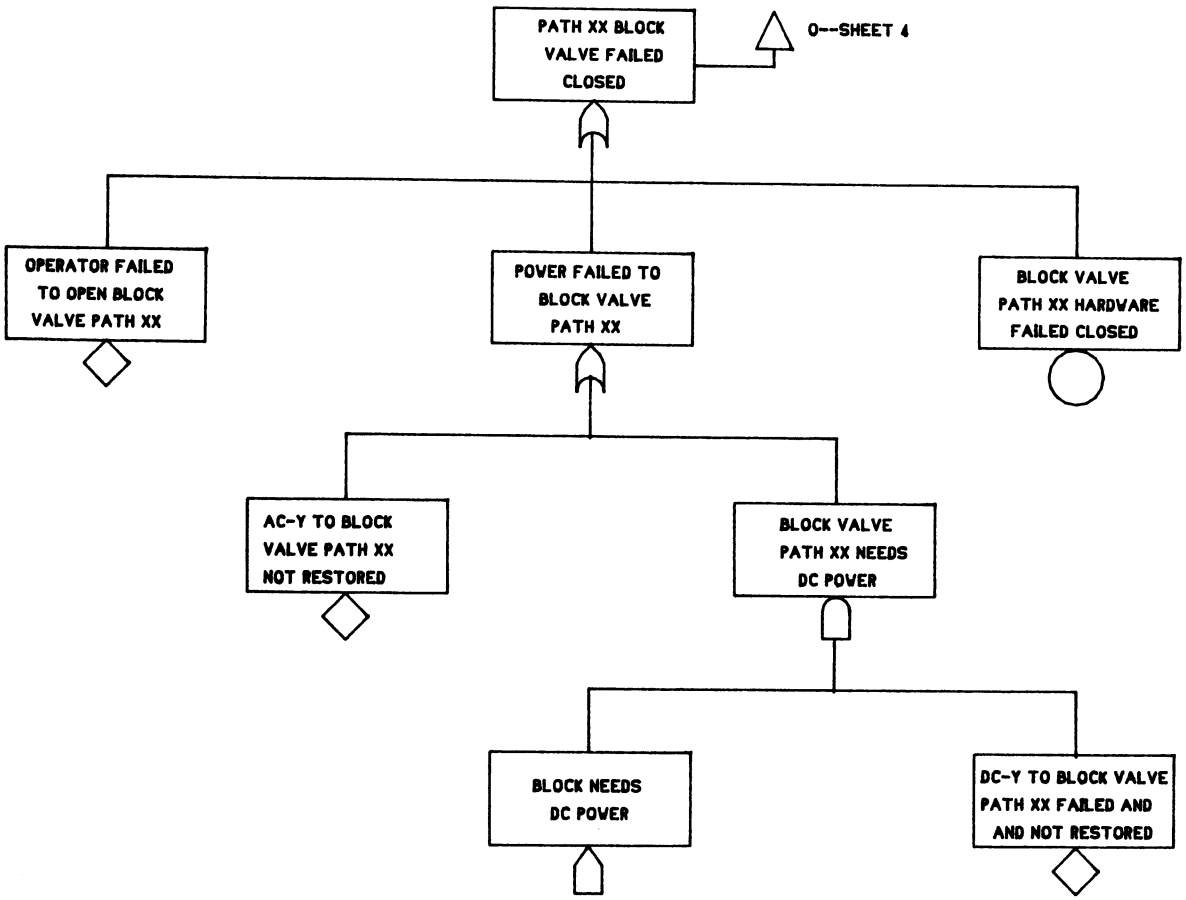

Figure C-1

PWR
HIGH PRESSURE MAKEUP
(SHEET 6)

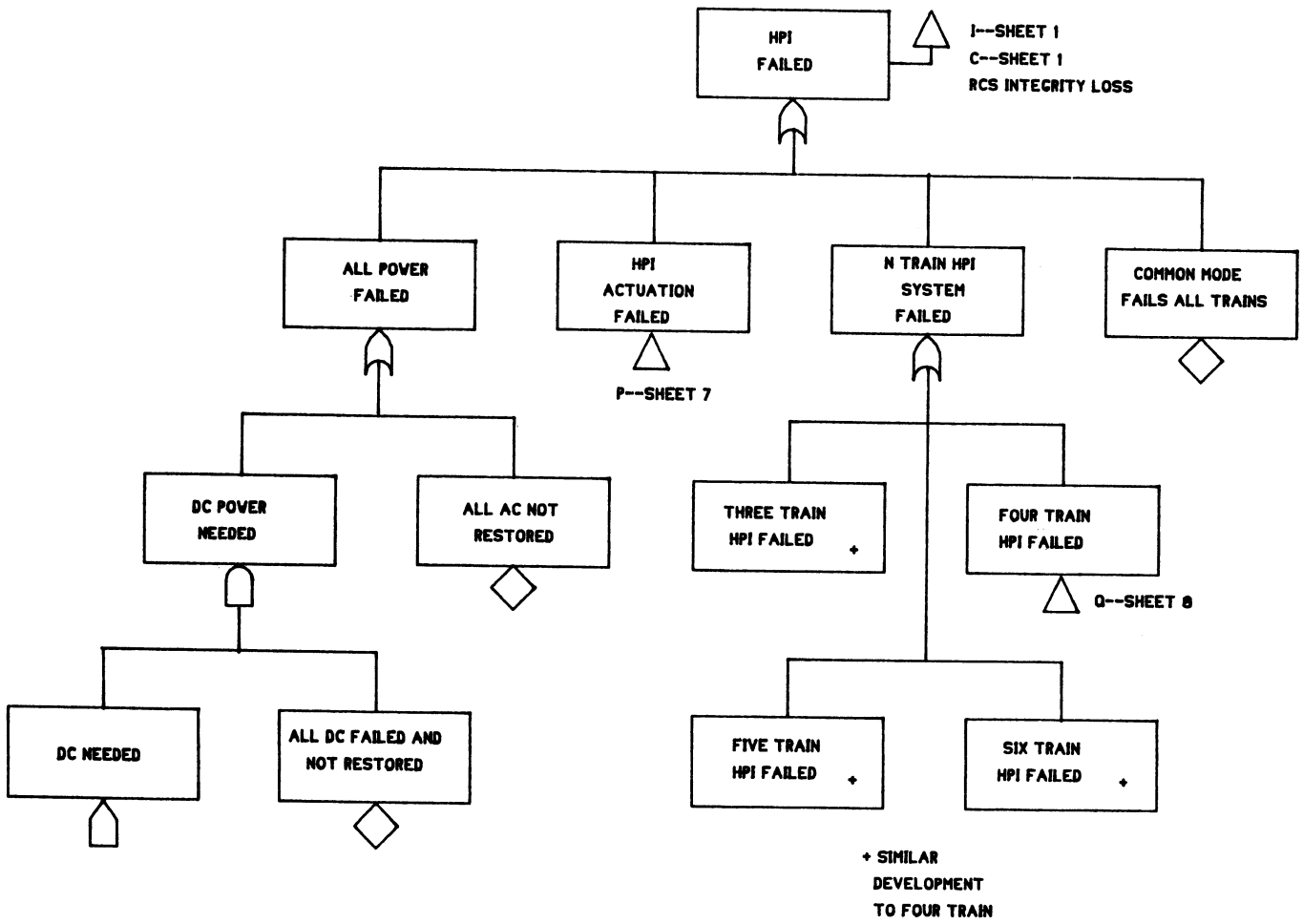

Figure C-1

PWR
HIGH PRESSURE MAKEUP
(SHEET 7)

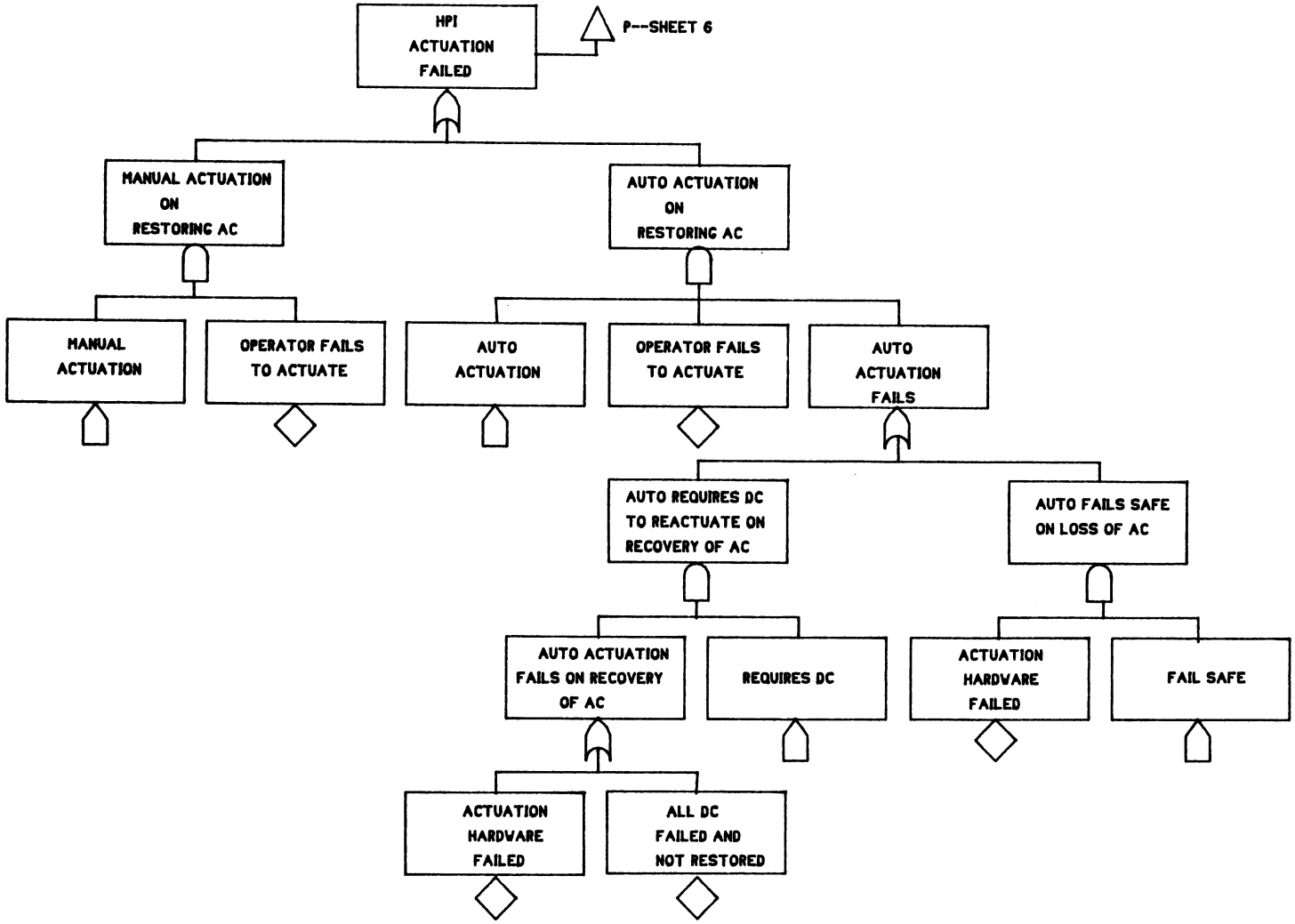

Figure C-1

PWR
HIGH PRESSURE MAKEUP
(SHEET 8)

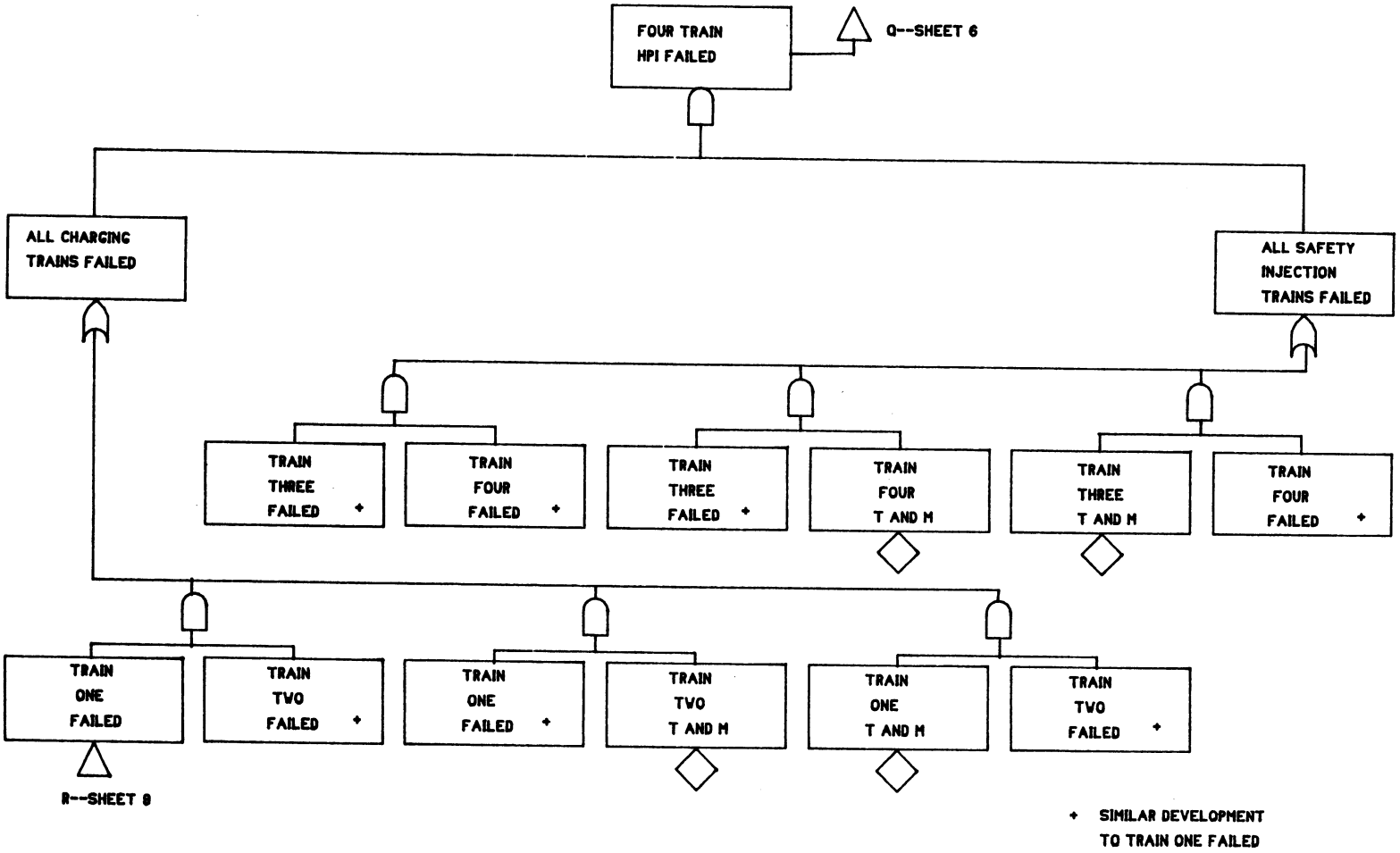

Figure C-1

PWR
HIGH PRESSURE MAKEUP
(SHEET 9)

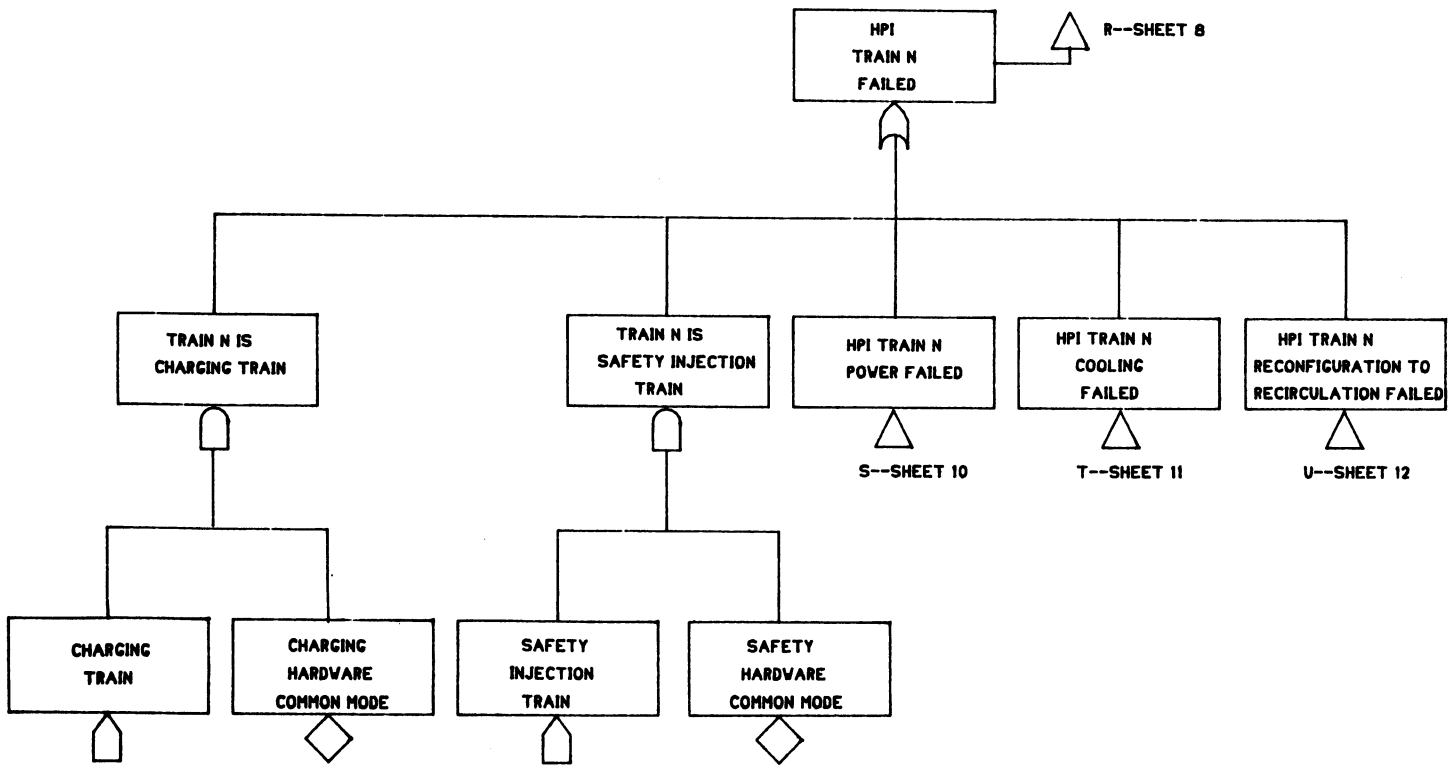

Figure C-1

PWR
HIGH PRESSURE MAKEUP
(SHEET 10)

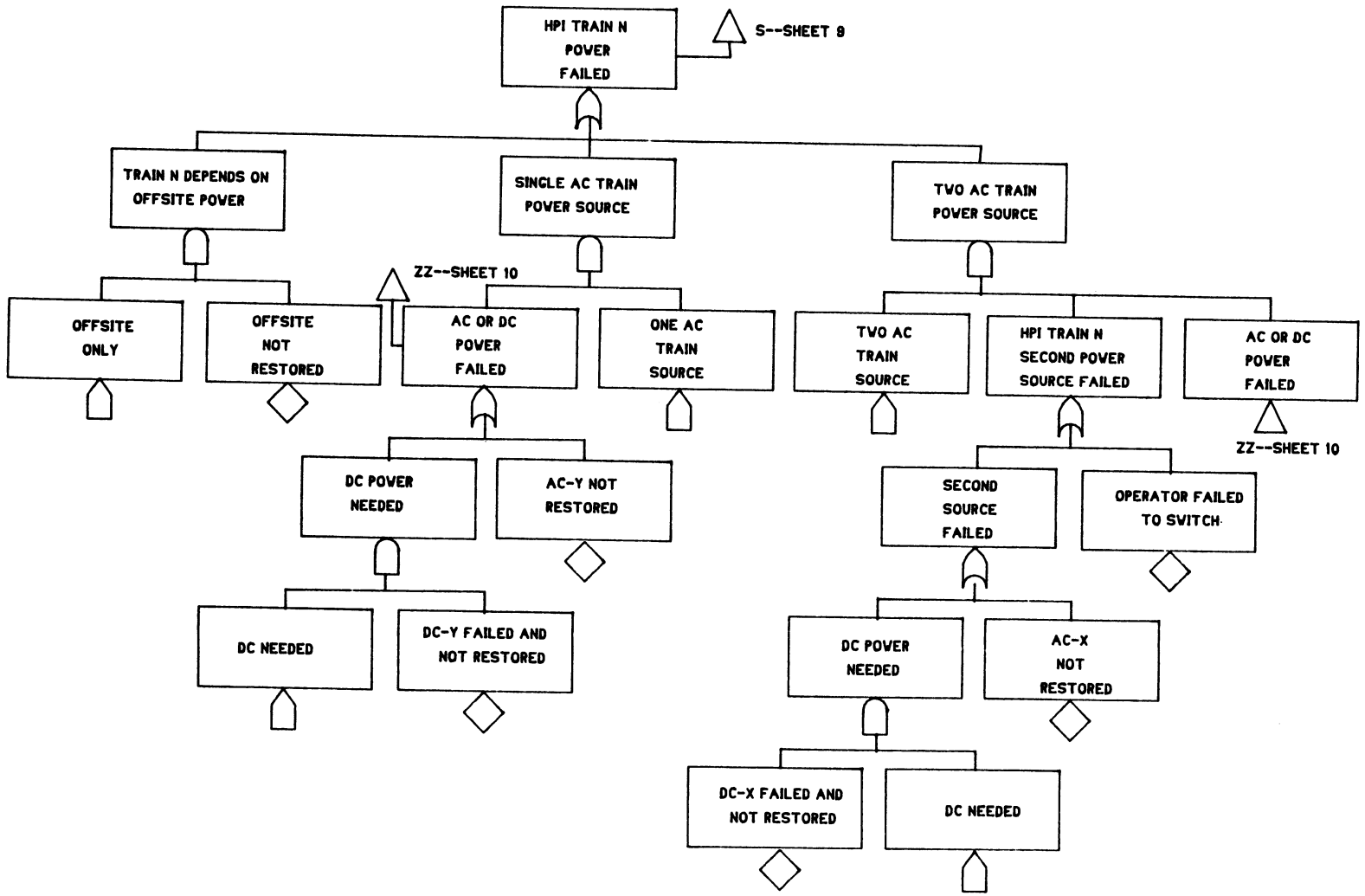

Figure C-1

PWR
HIGH PRESSURE MAKEUP
(SHEET 11)

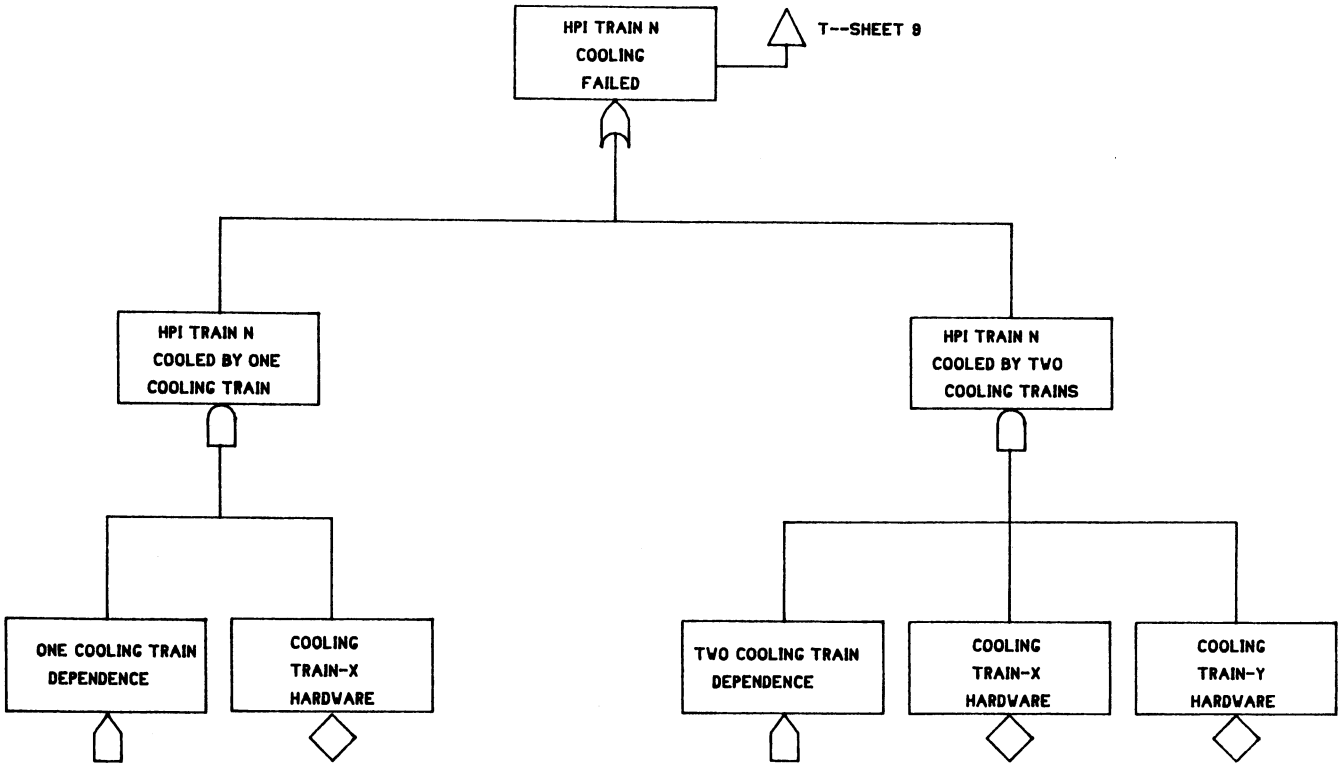

Figure C-1

PWR
HIGH PRESSURE MAKEUP
(SHEET 12)

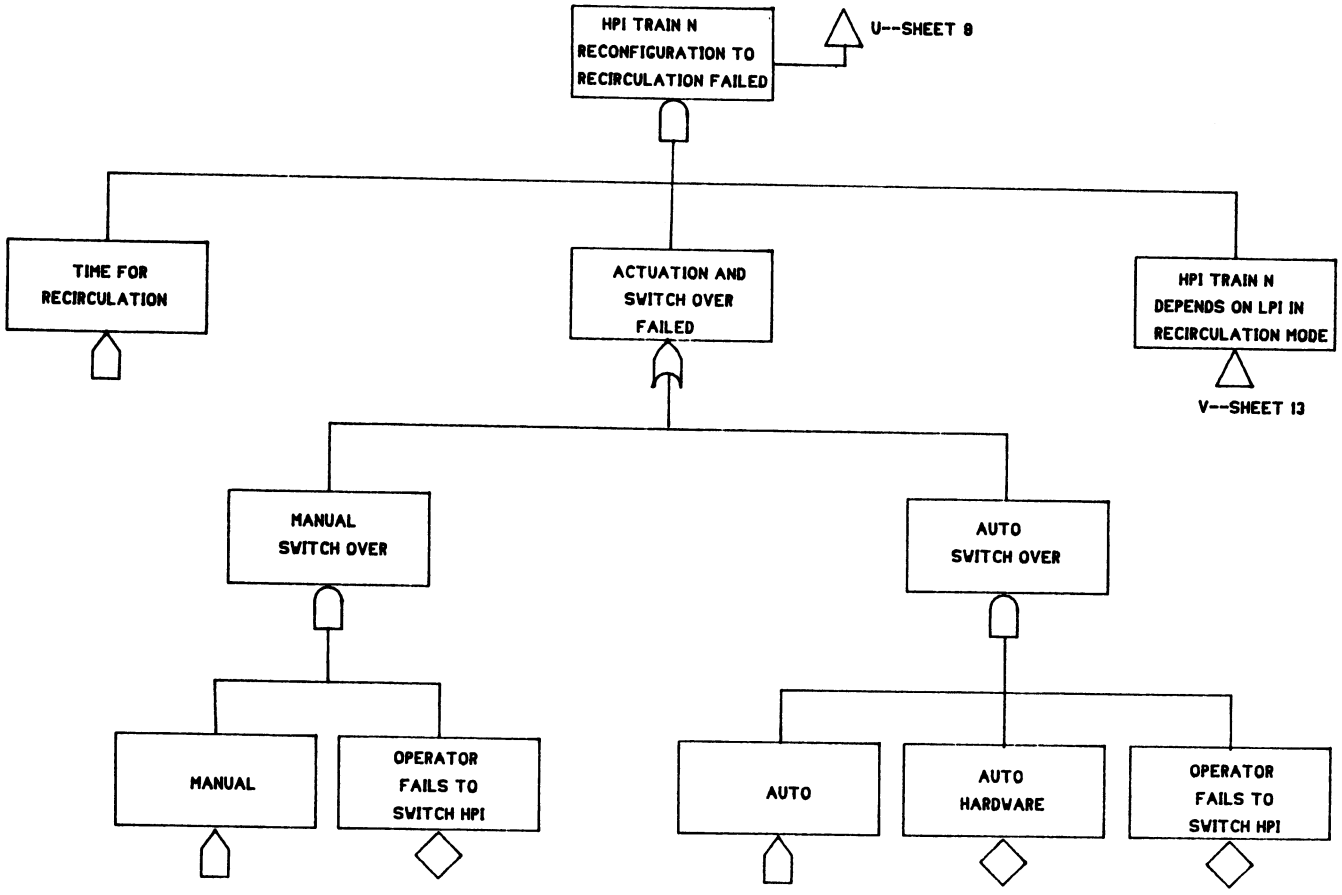

Figure C-1

PWR
HIGH PRESSURE MAKEUP
(SHEET 13)

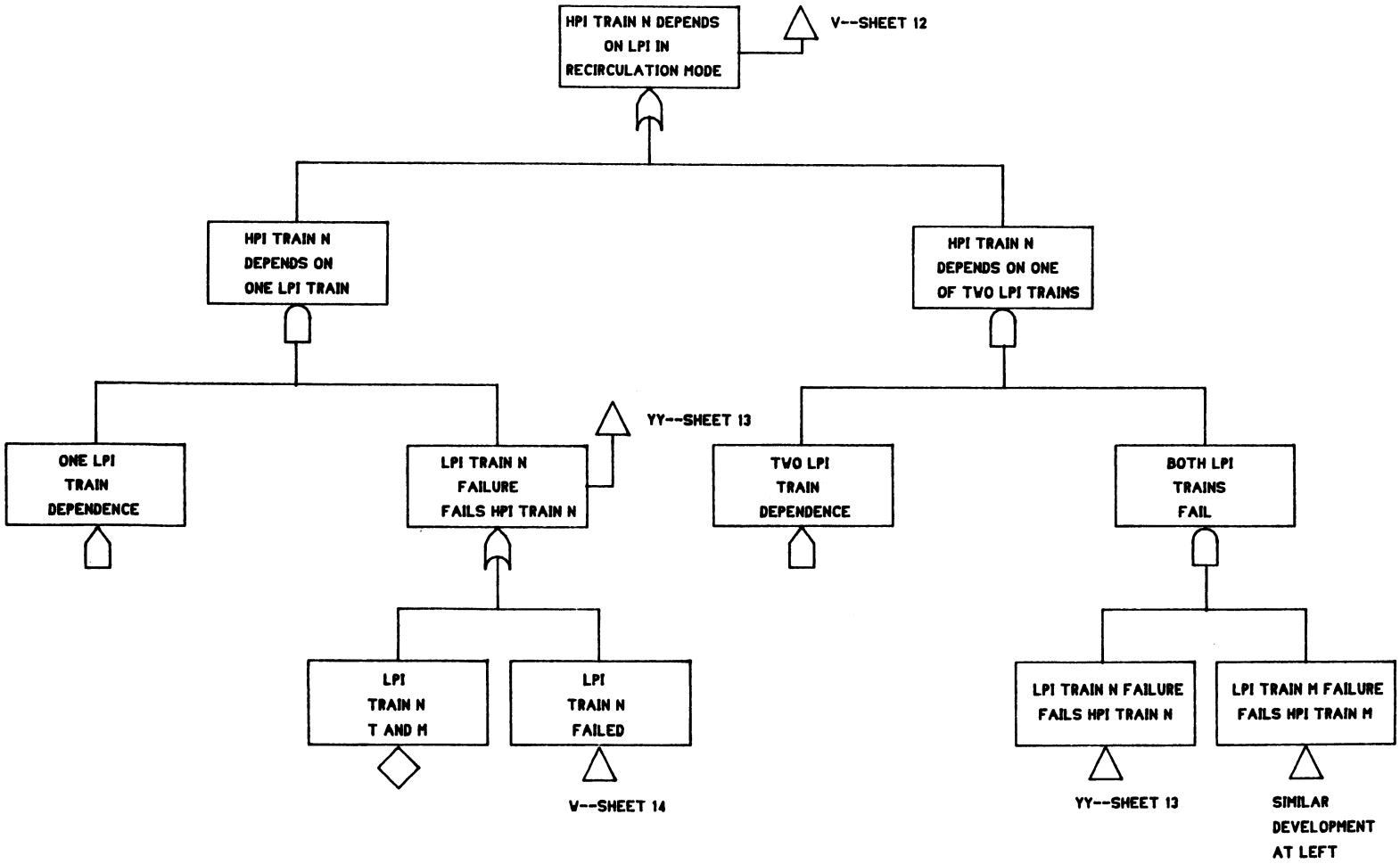

Figure C-1

PWR
HIGH PRESSURE MAKEUP
(SHEET 14)

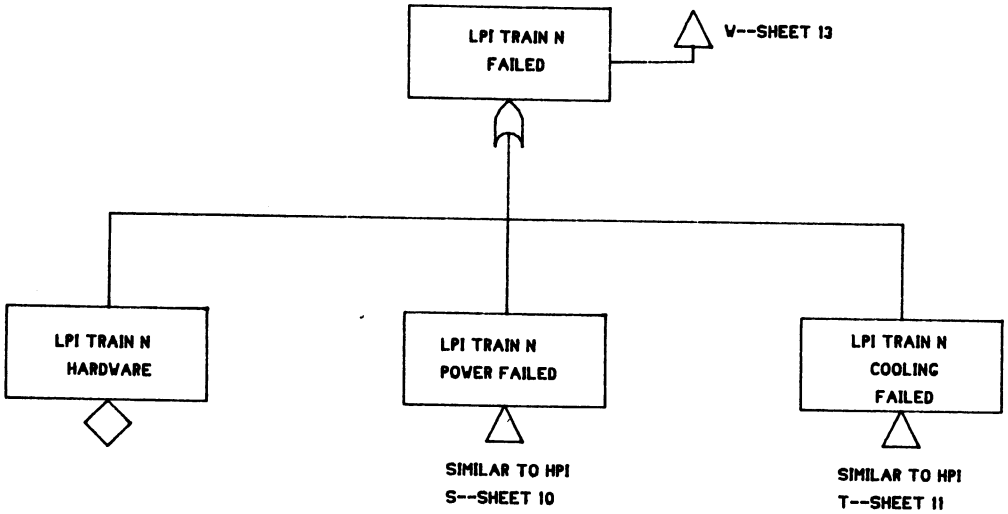

Figure C-2

PWR
RCS INTEGRITY LOSS
(SHEET 1)

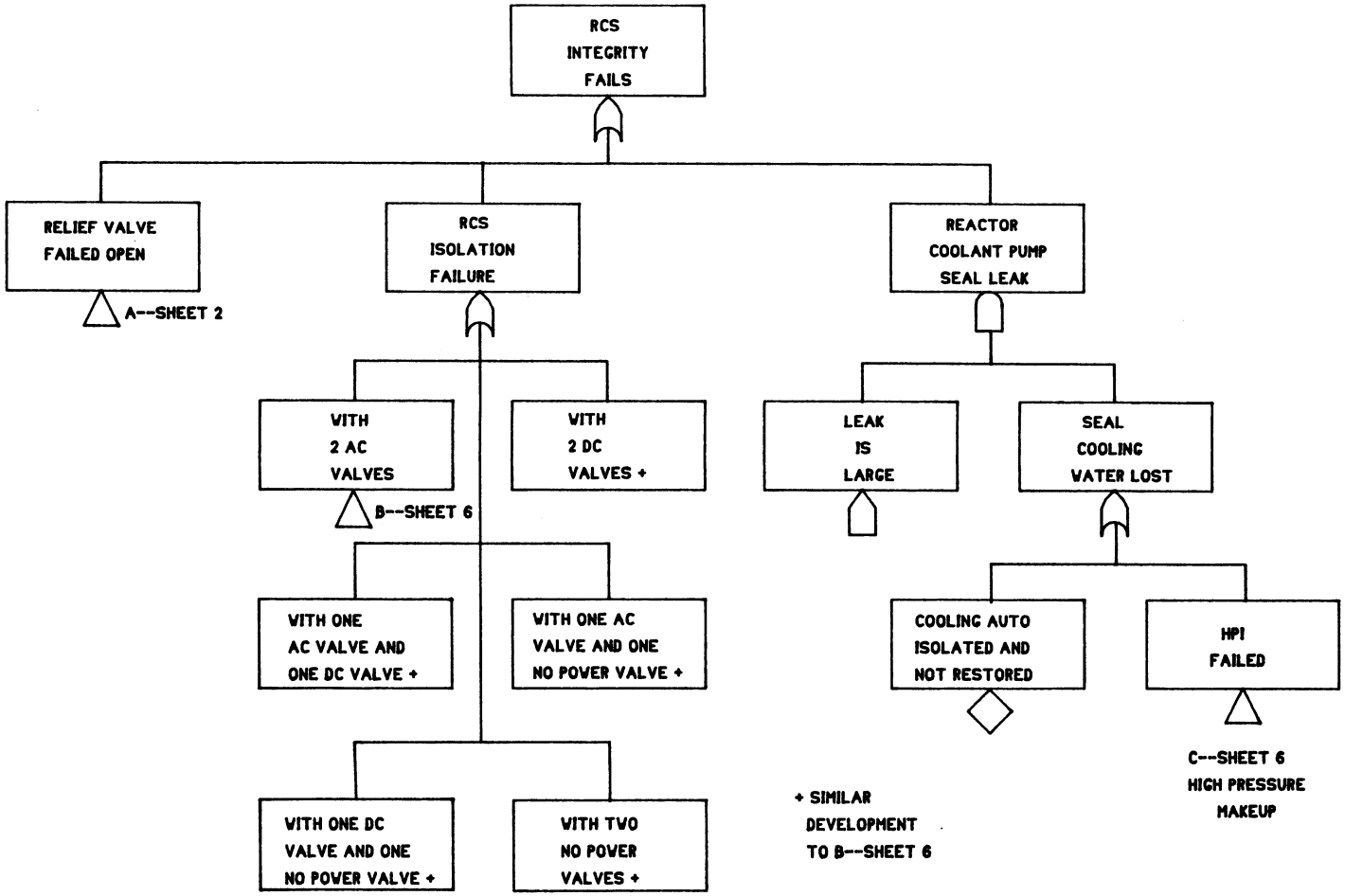

Figure C-2

PWR
RCS INTEGRITY LOSS
(SHEET 2)

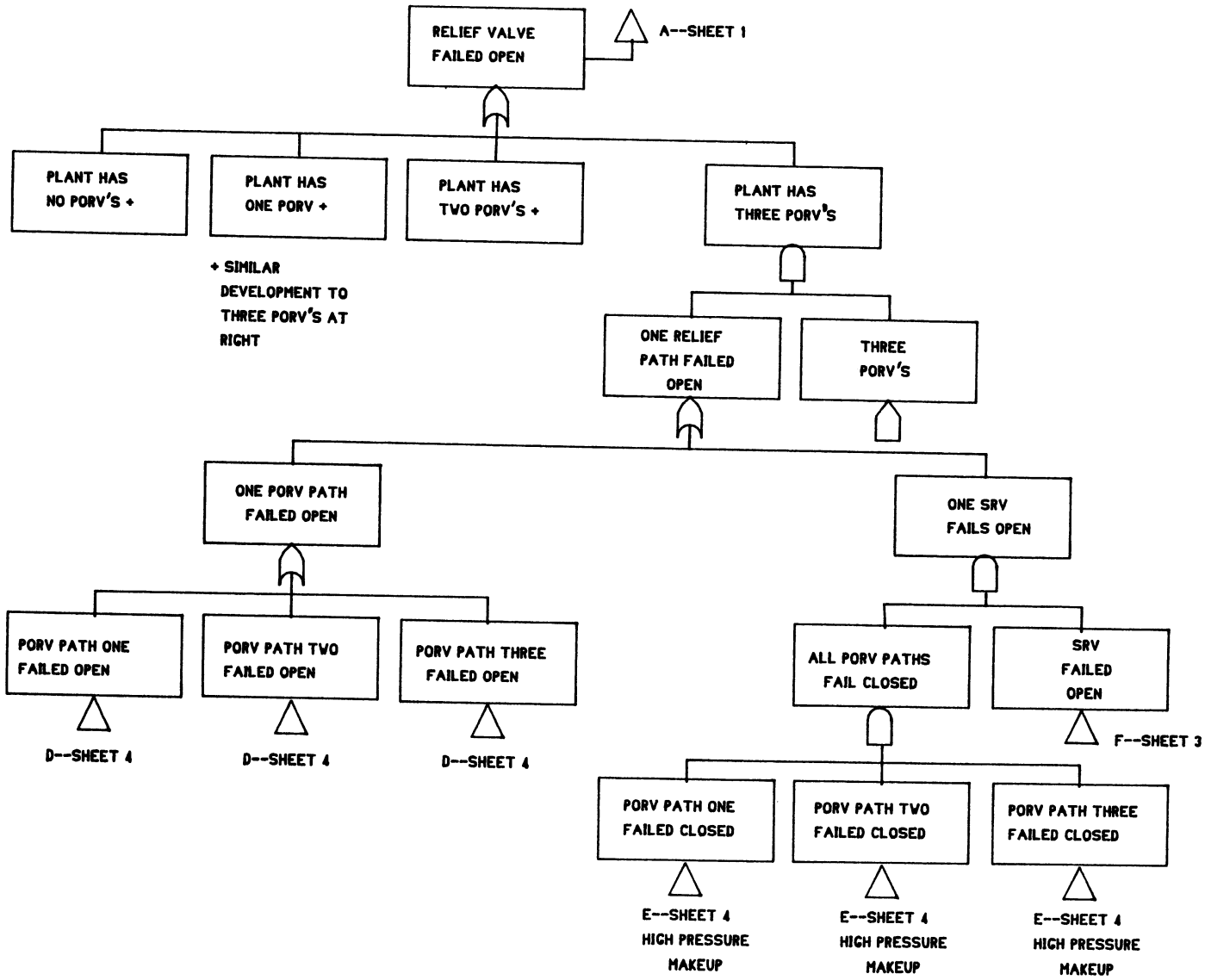

Figure C-2

PWR
RCS INTEGRITY LOSS
(SHEET 3)

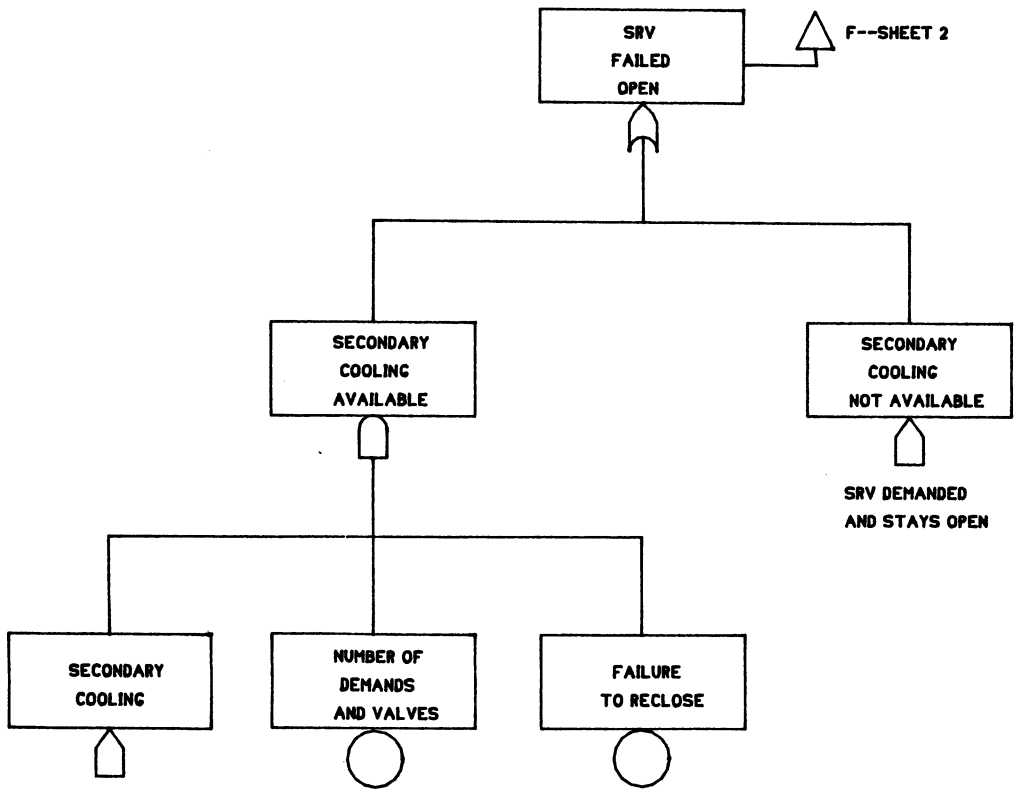

Figure C-2

PWR
RCS INTEGRITY LOSS
(SHEET 4)

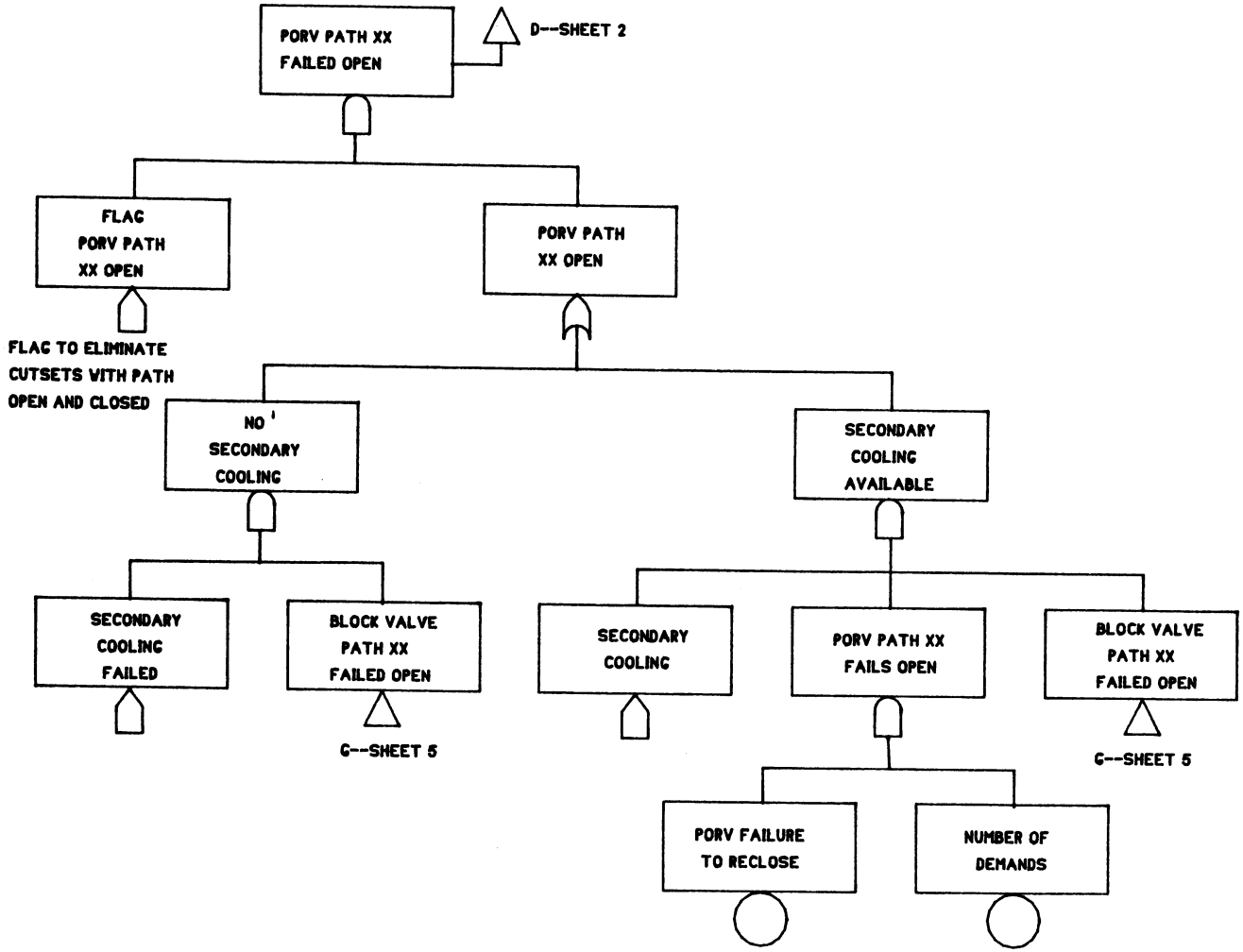

Figure C-2

PWR
RCS INTEGRITY LOSS
(SHEET 5)

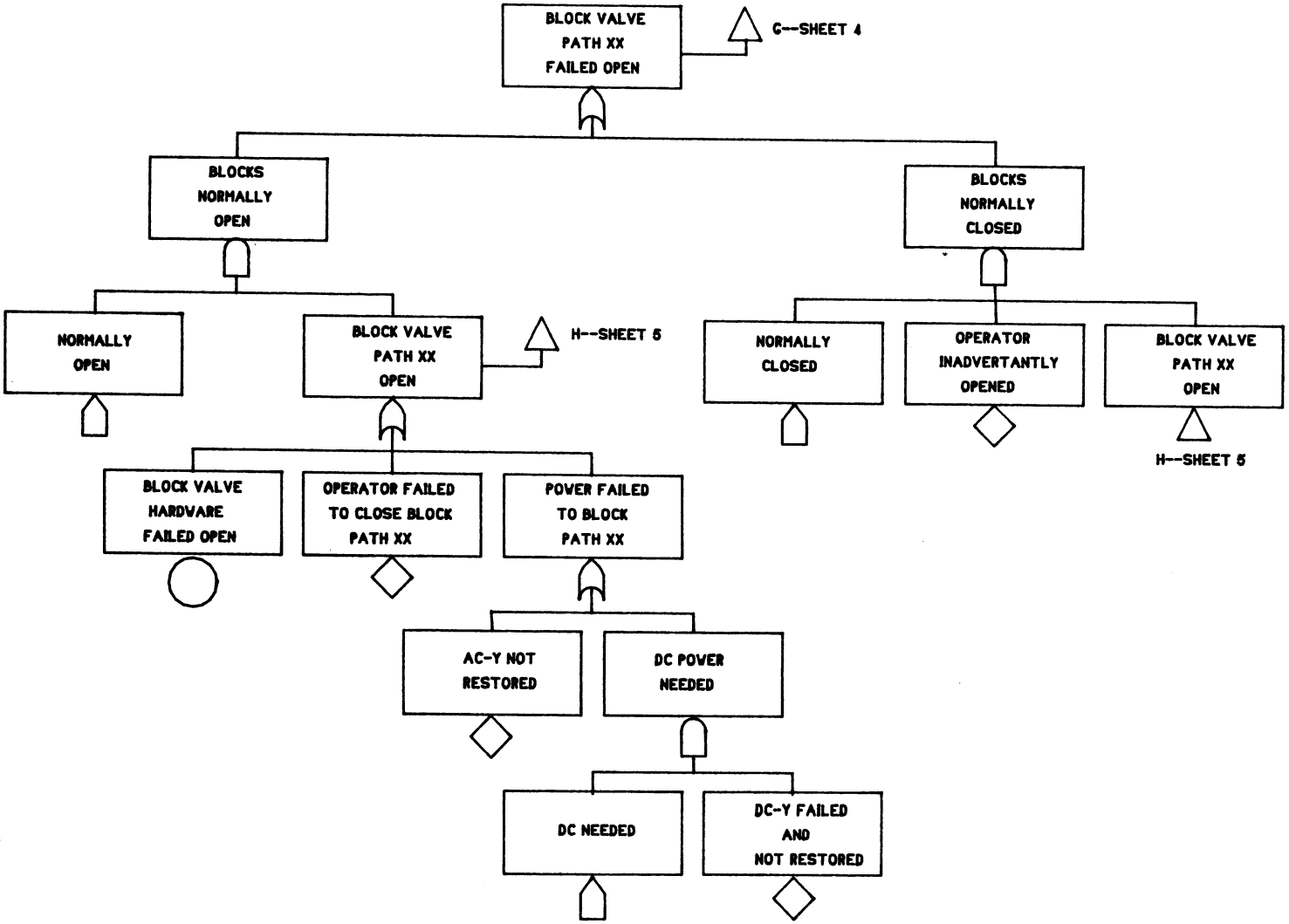

Figure C-2

PWR
RCS INTEGRITY LOSS
(SHEET 6)

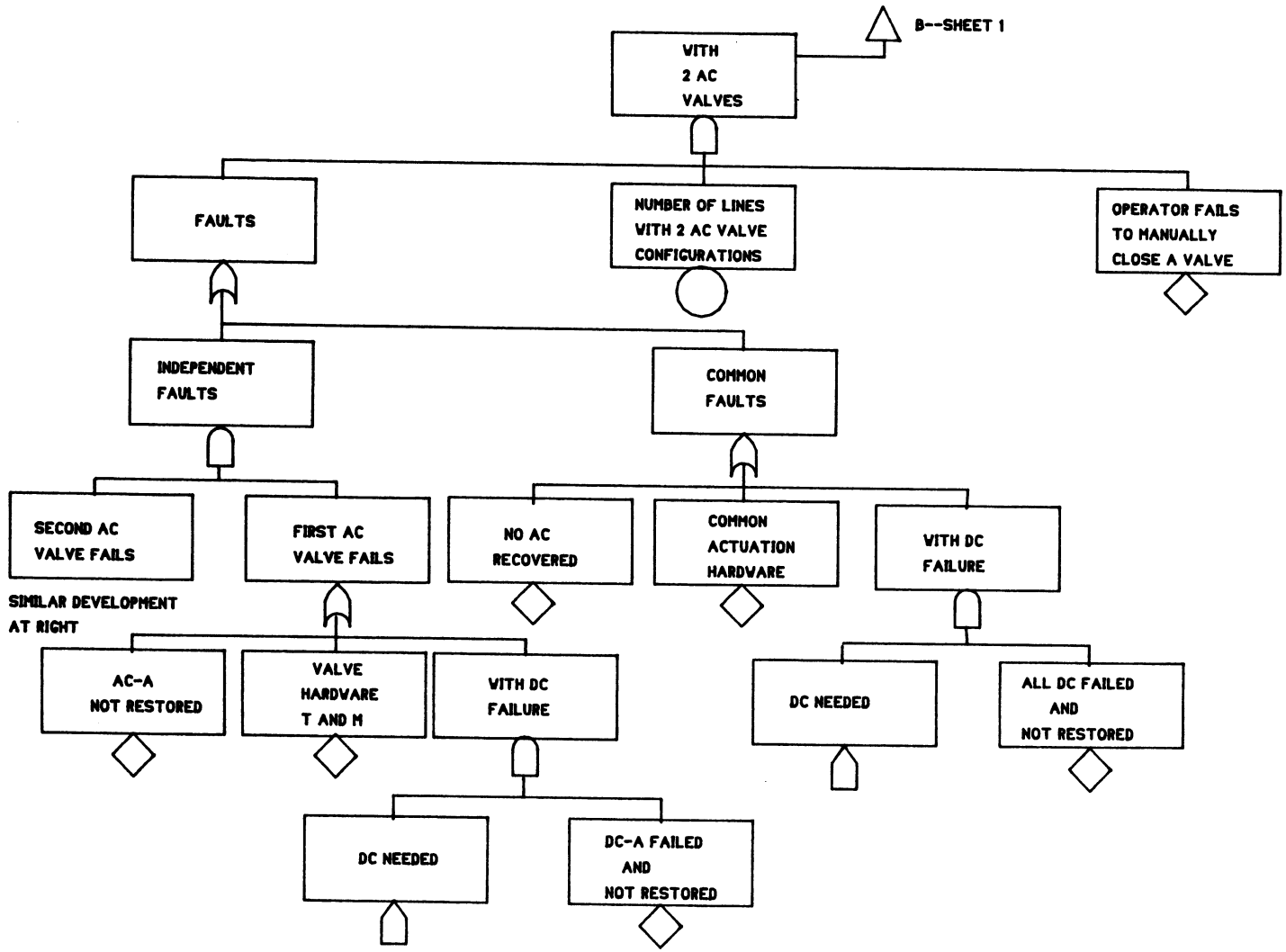

Figure C-3

PWR
AUXILIARY FEEDWATER
(SHEET 1)

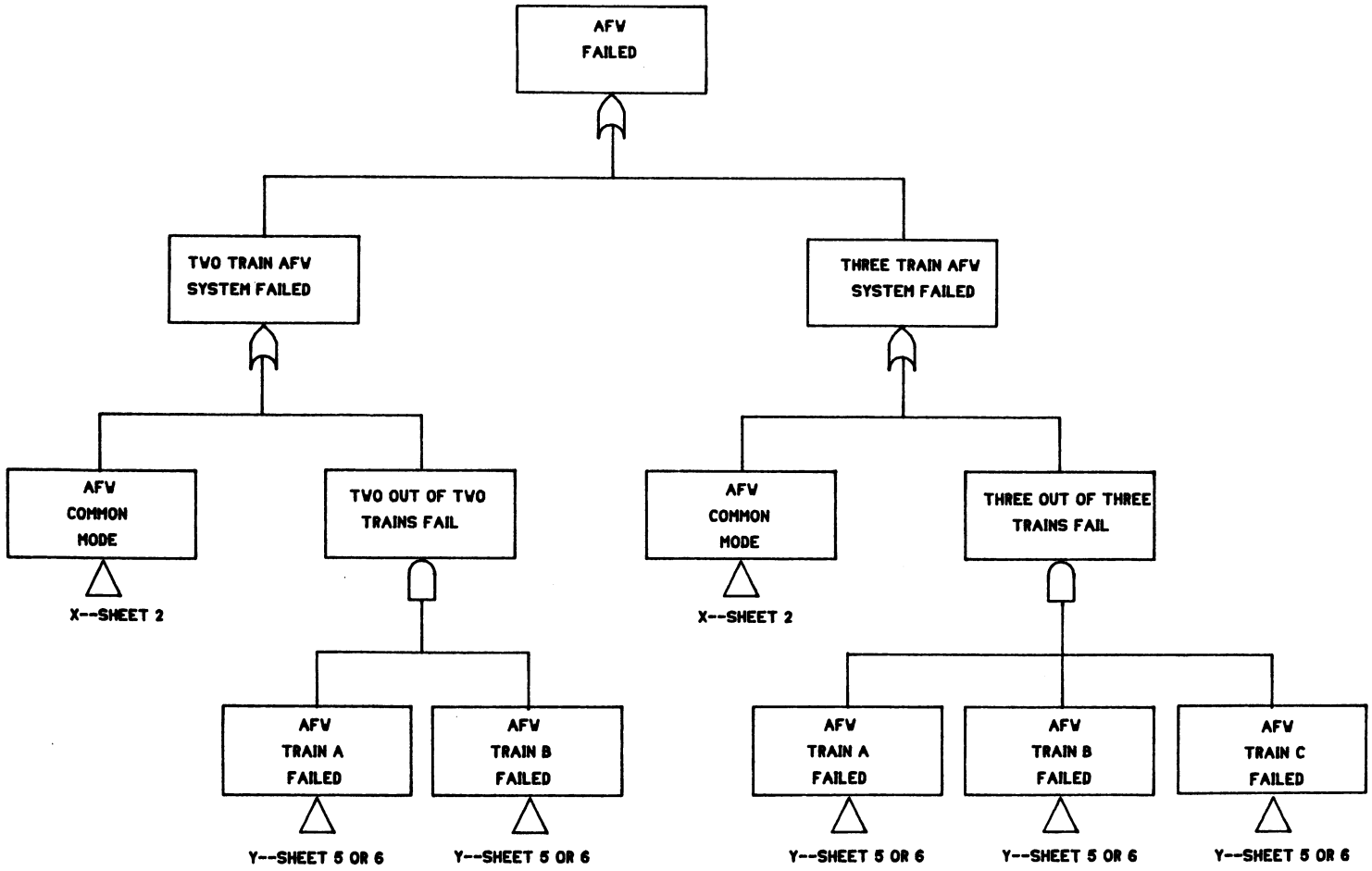

Figure C-3

PWR
AUXILIARY FEEDWATER
(SHEET 2)

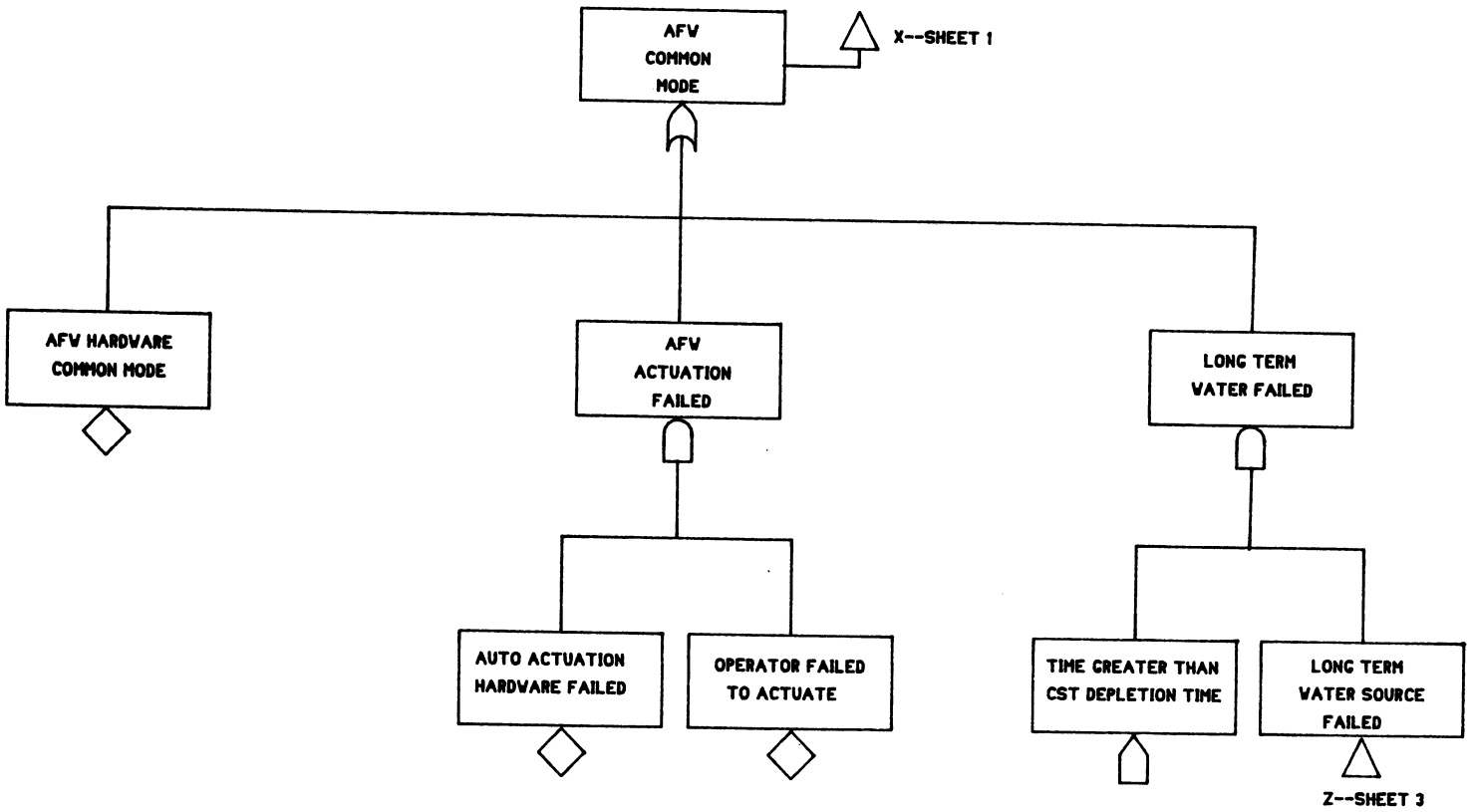

Figure C-3

PWR
AUXILIARY FEEDWATER
(SHEET 3)

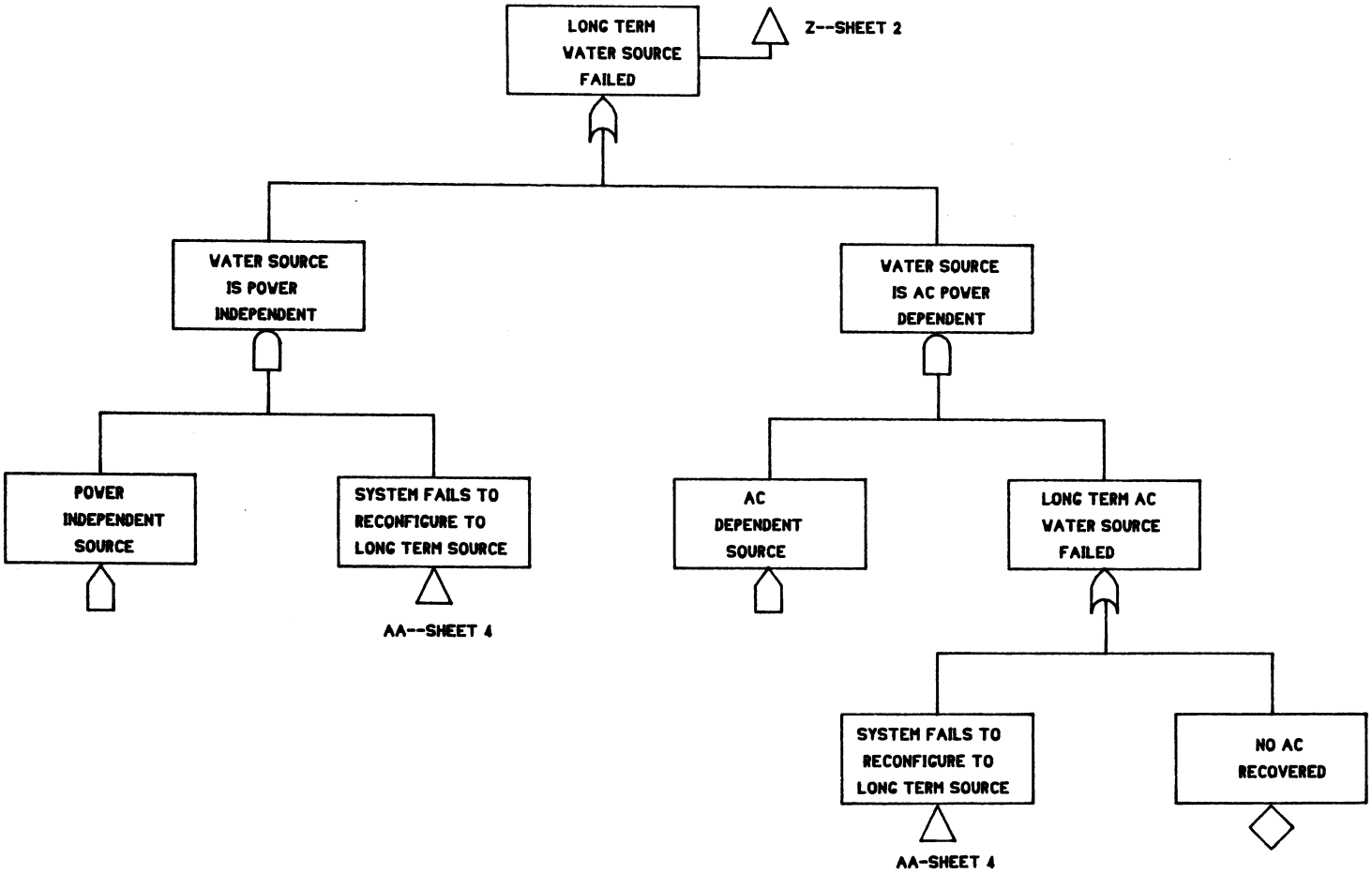

Figure C-3

PWR
AUXILIARY FEEDWATER
(SHEET 4)

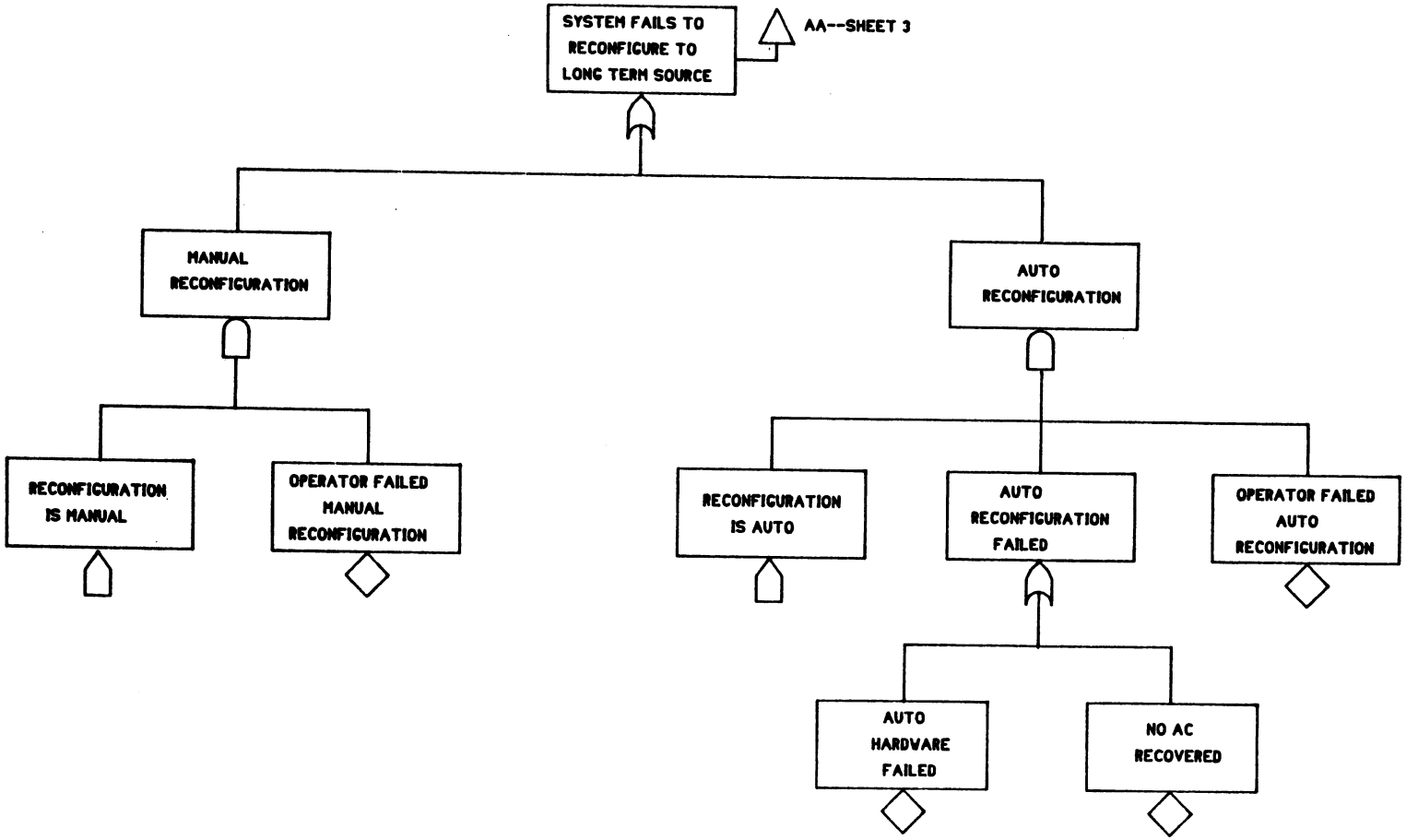

Figure C-3

PWR
AUXILIARY FEEDWATER
(SHEET 5)

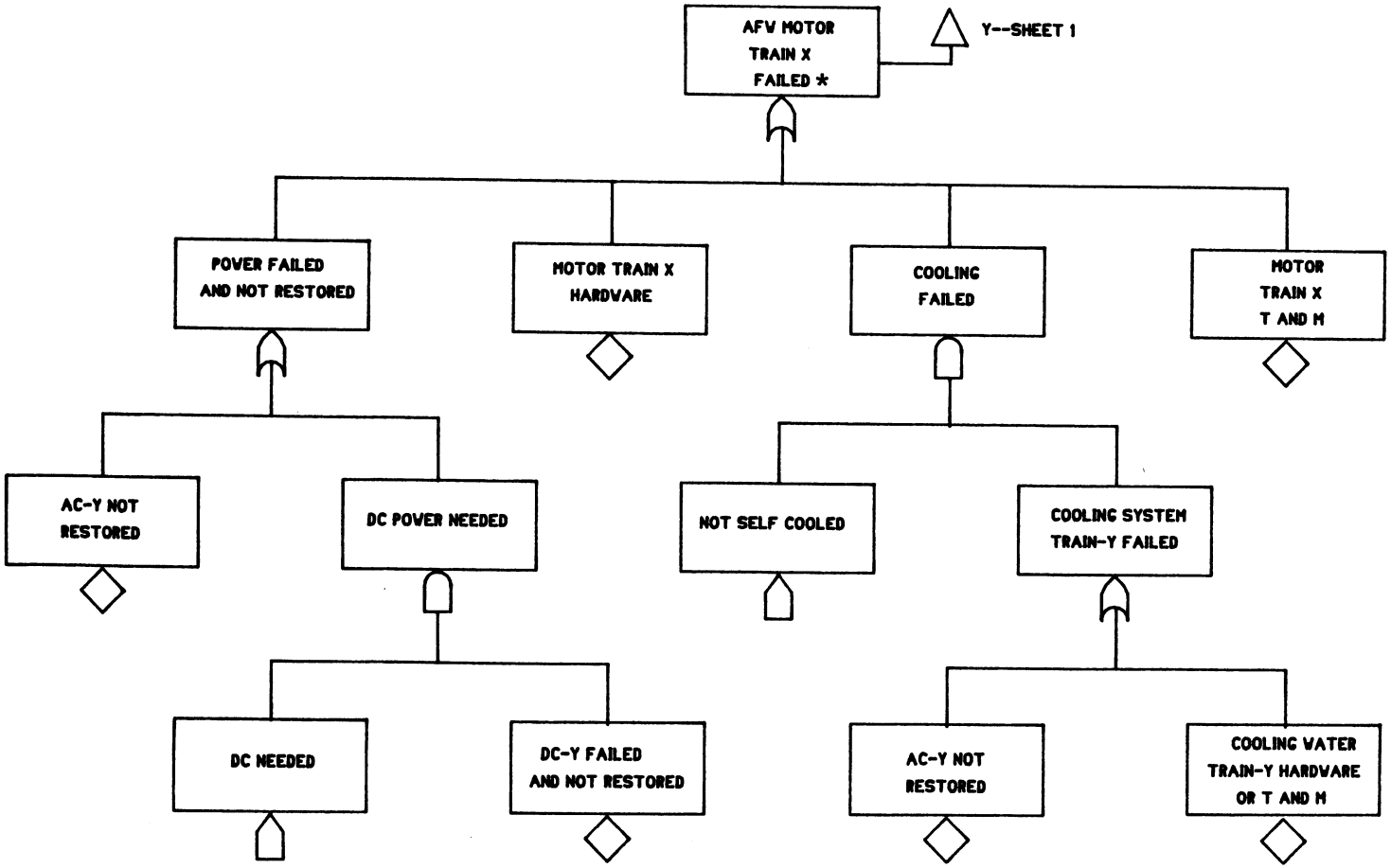

*Similar development for diesel train except include ventilation failure and no direct power failure since it is self powered (local battery for starting).

Figure C-3

PWR
AUXILIARY FEEDWATER
(SHEET 6)

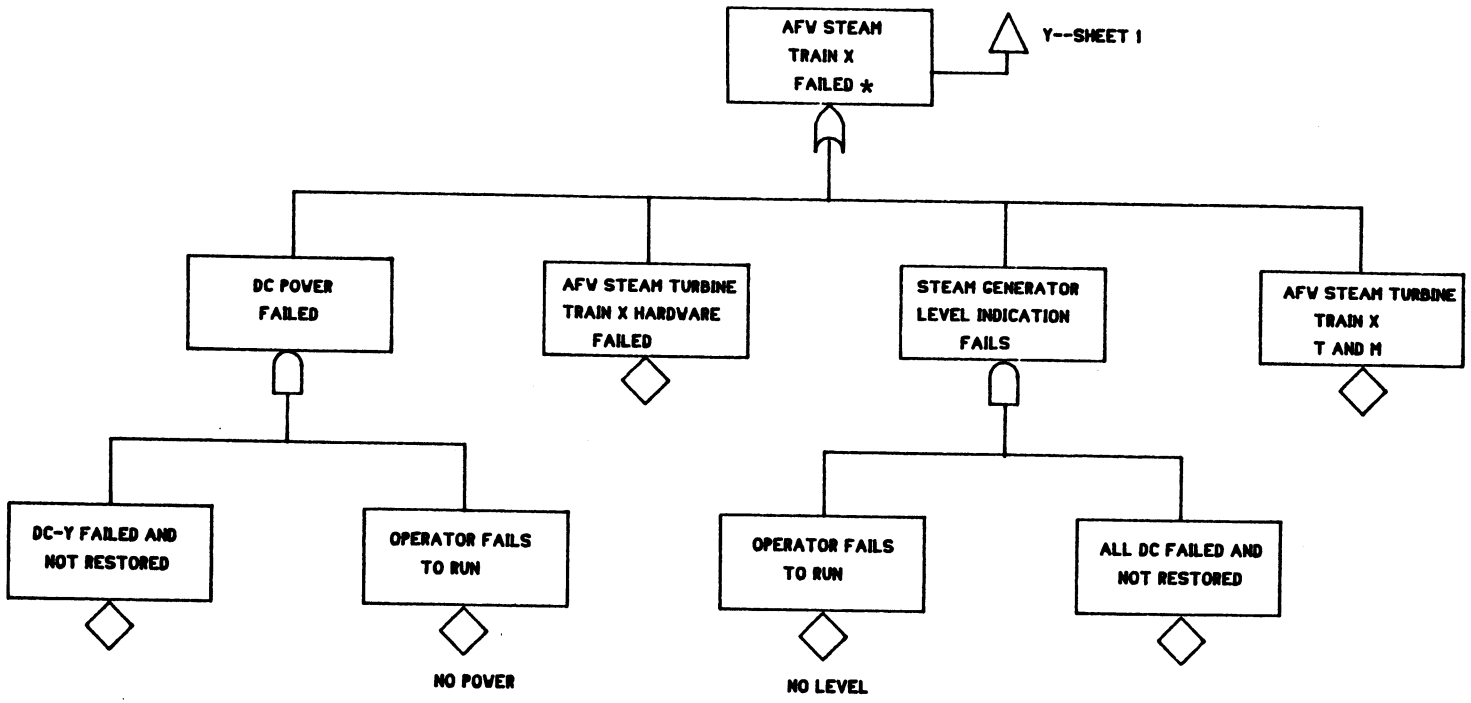

*This development is for a single DC train power source. A similar development for (1) dedicated battery power (turbine and/or level) (see BB-sheet 7) or (2) turbine switchable to other DC TR.

Figure C-3

PWR
AUXILIARY FEEDWATER
(SHEET 7)

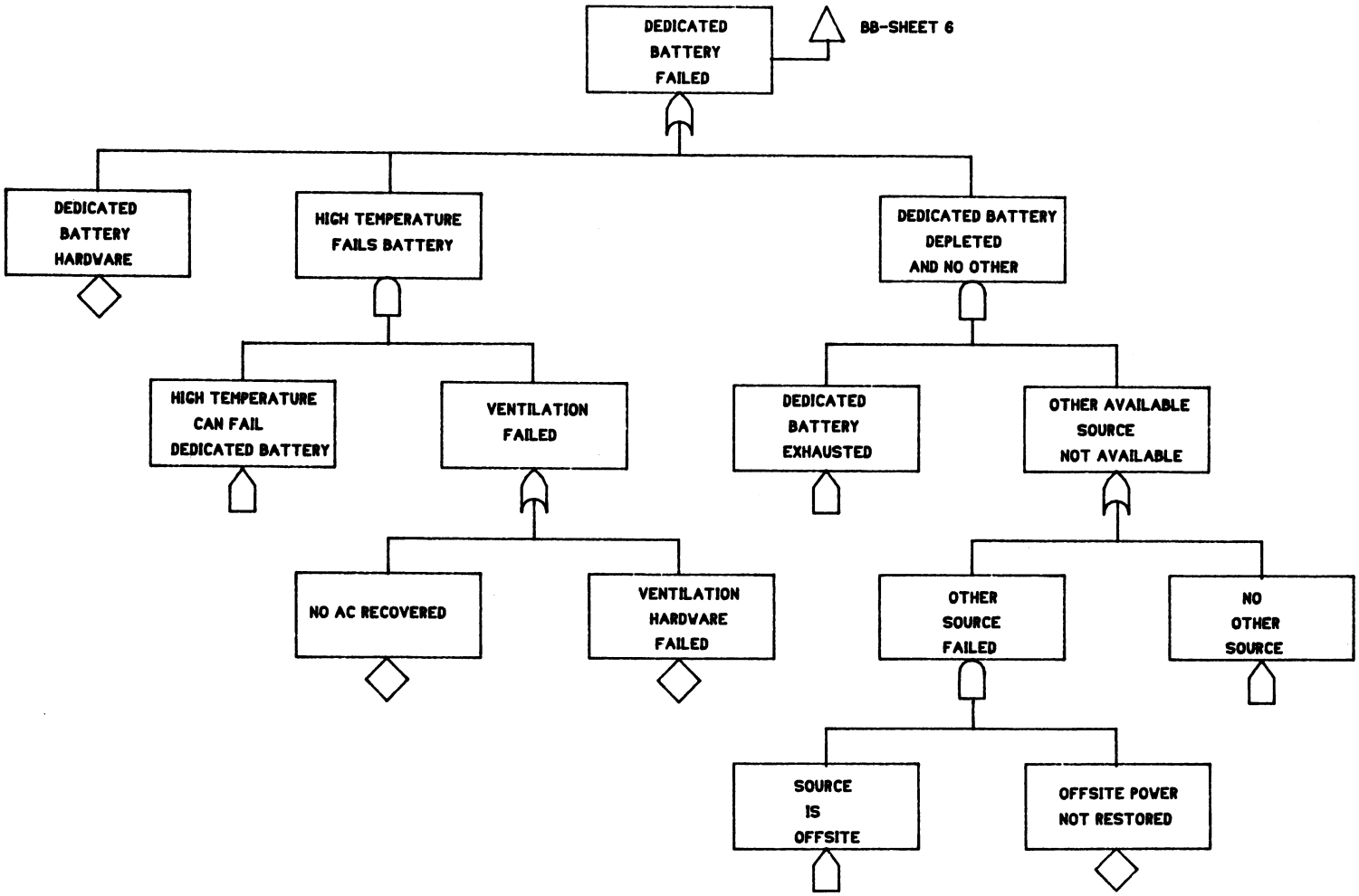

Figure C-4

BWR
RCS INTEGRITY LOSS
(SHEET 1)

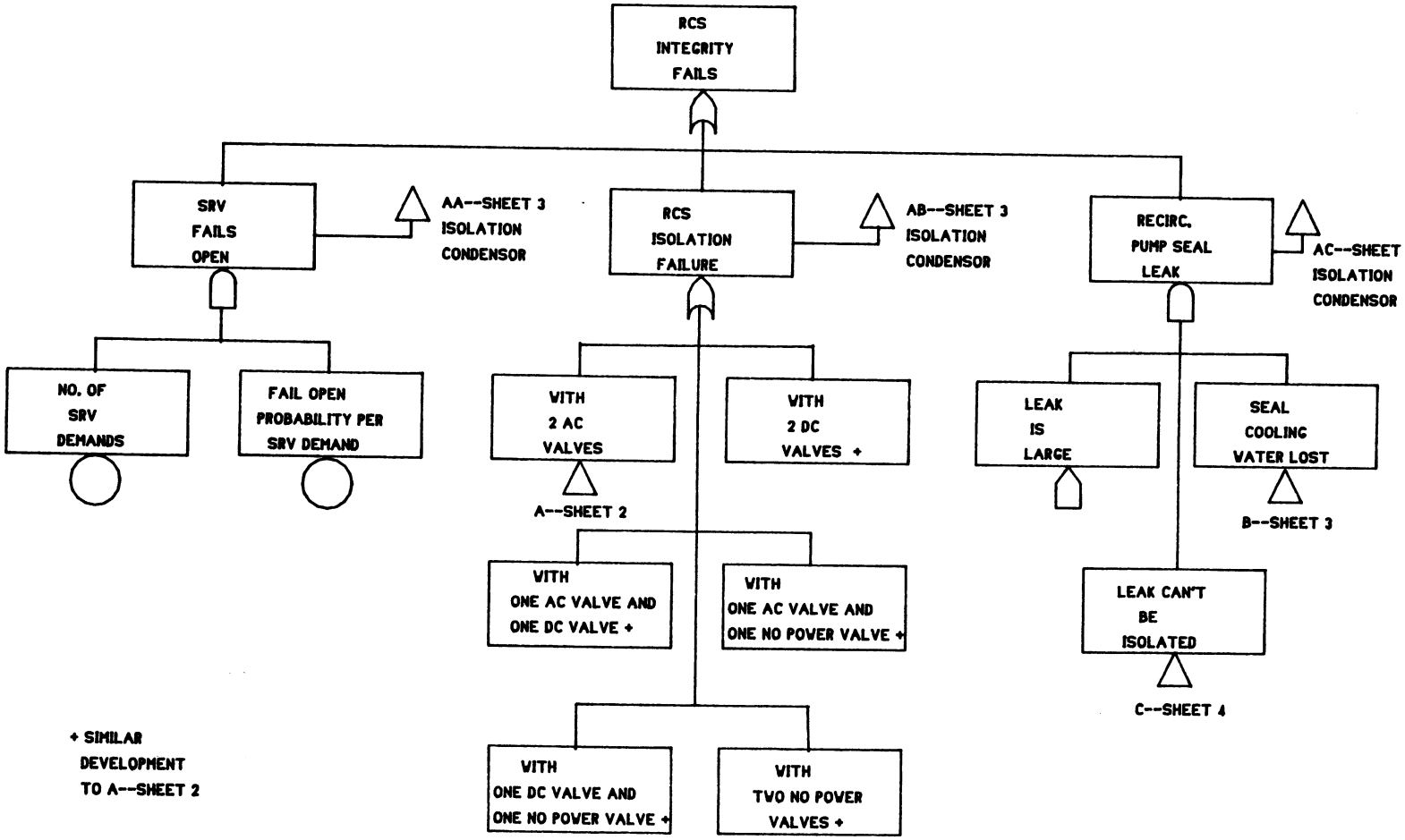

Figure C-4

BWR
RCS INTEGRITY LOSS
(SHEET 2)

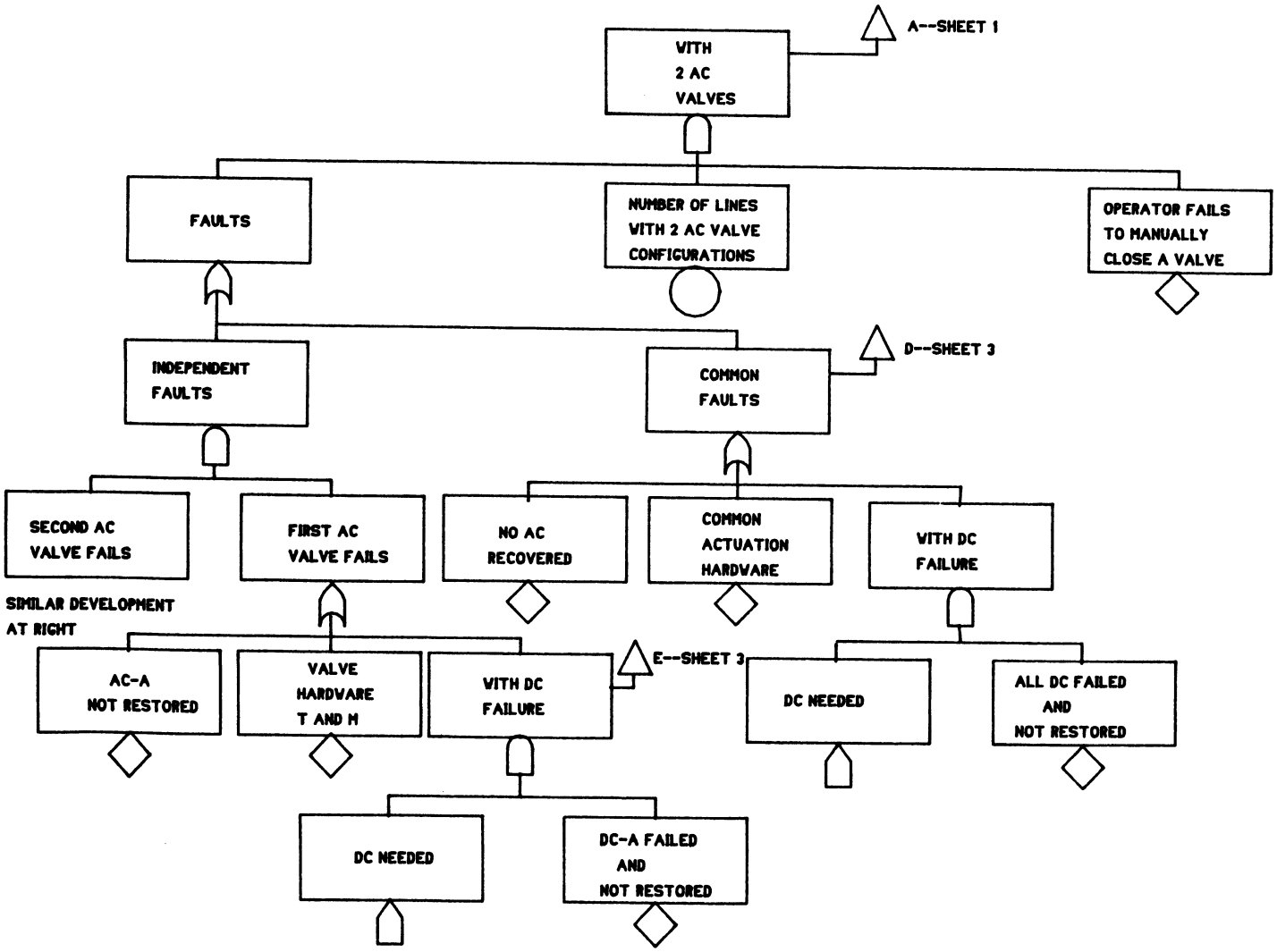

Figure C-4

BWR
RCS INTEGRITY LOSS
(SHEET 3)

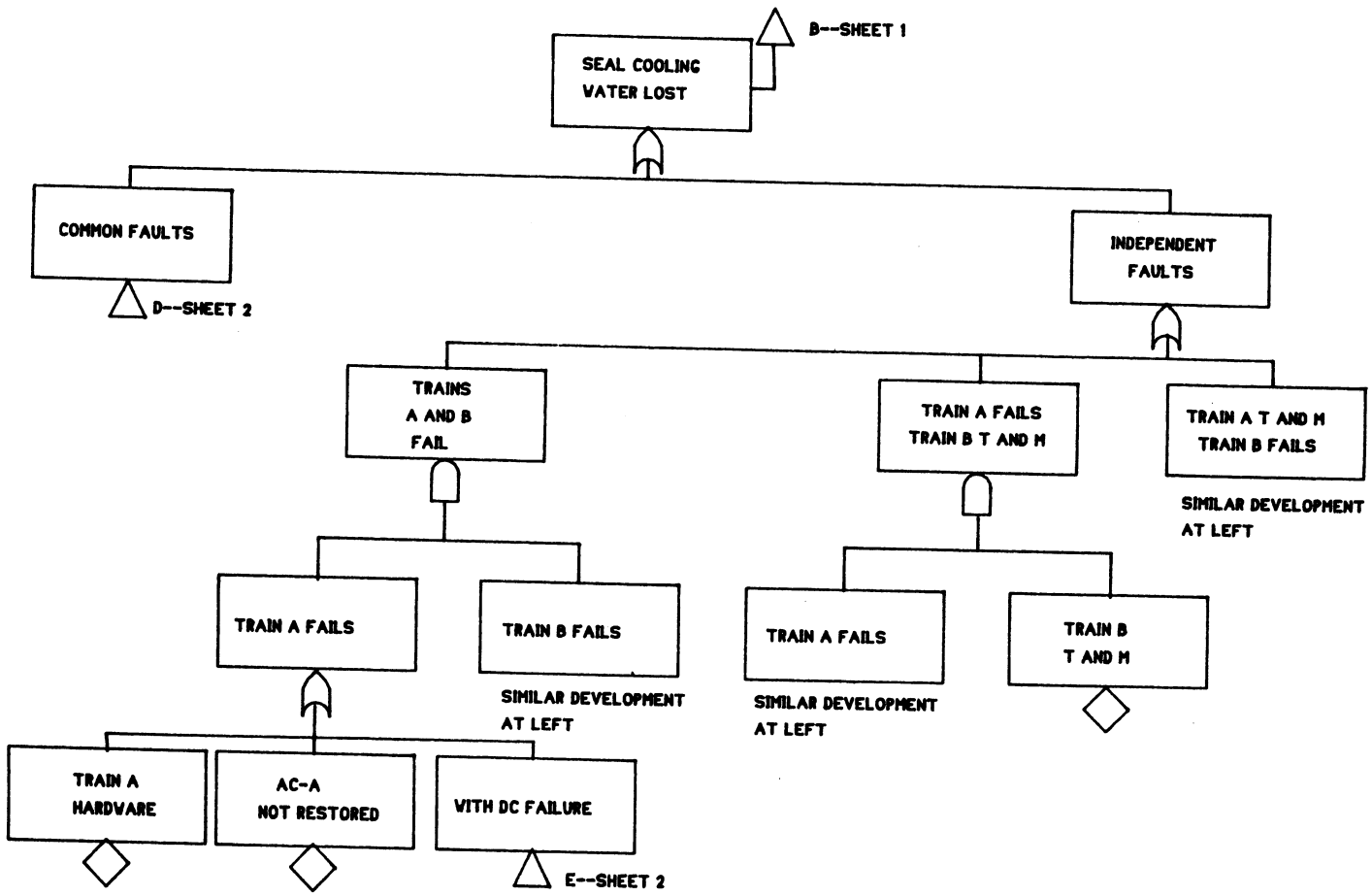

Figure C-4

BWR
RCS INTEGRITY LOSS
(SHEET 4)

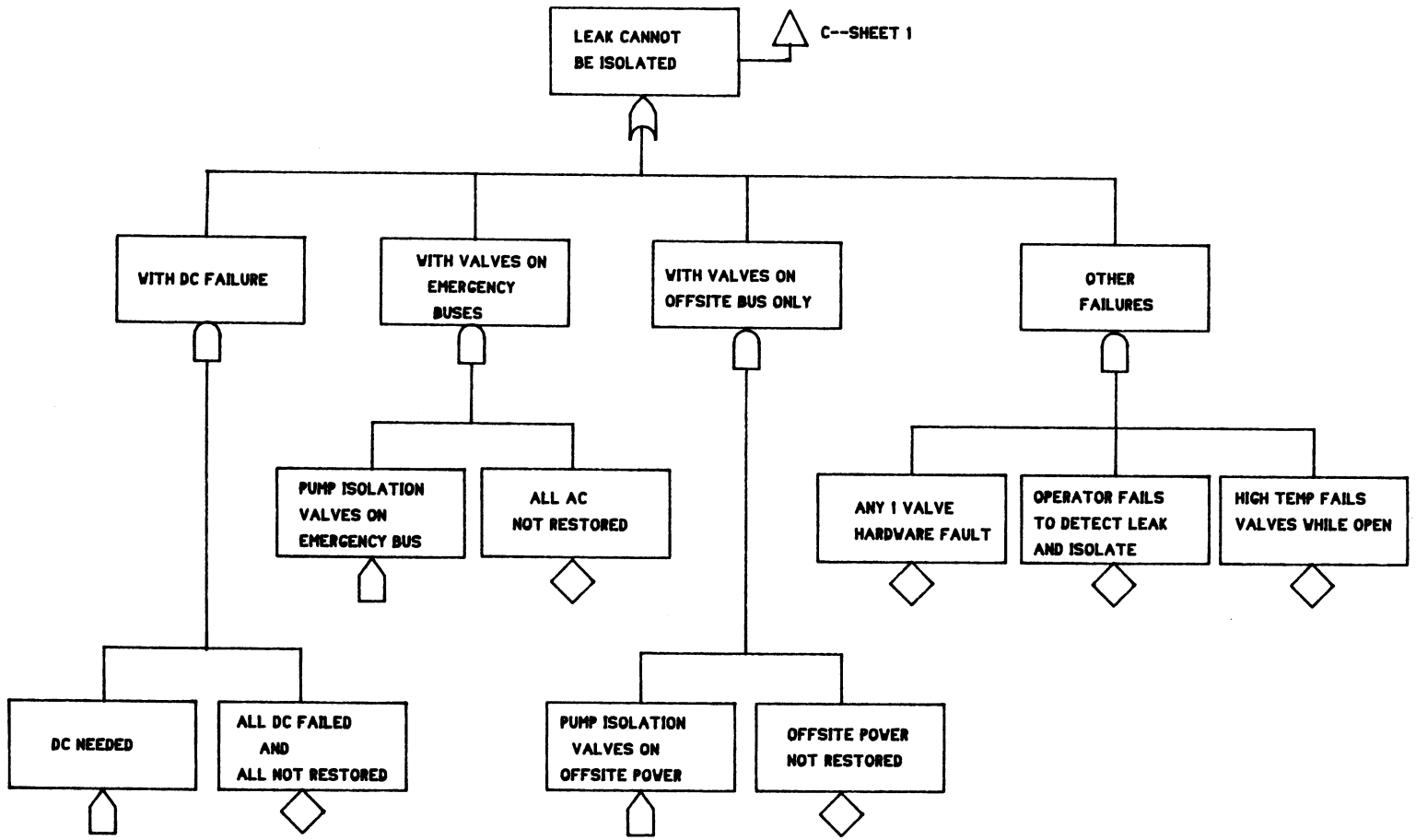

Figure C-5

BWR -- ISOLATION
CONDENSOR FAILURE
(SHEET 1)

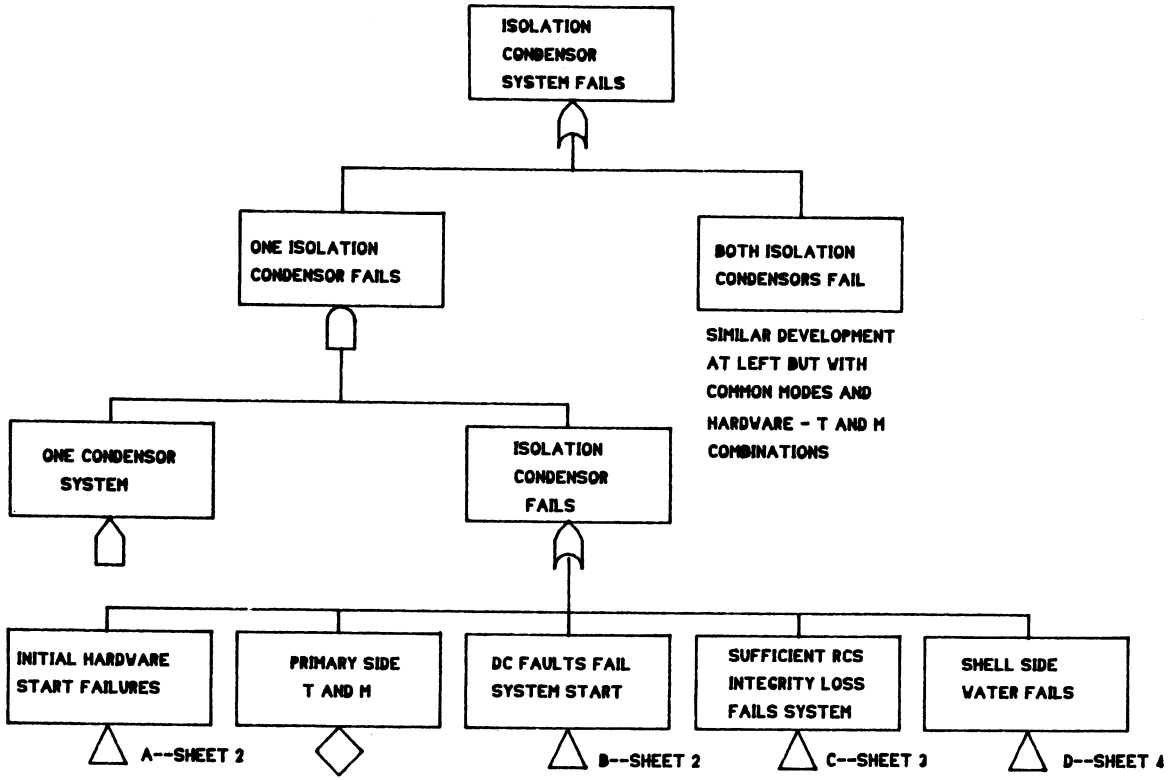

Figure C-5

BWR--ISOLATION
CONDENSOR FAILURE
(SHEET 2)

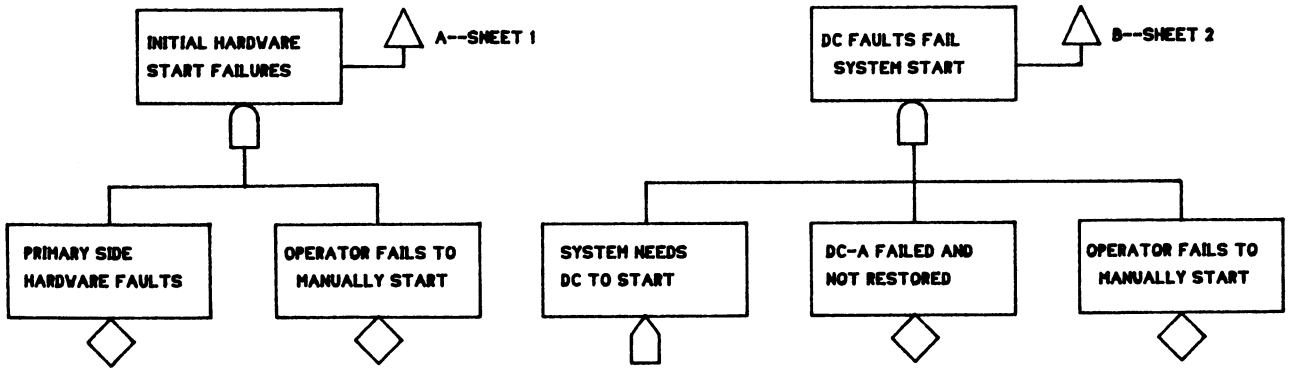

Figure C-5

BWR--ISOLATION
CONDENSOR FAILURE
(SHEET 3)

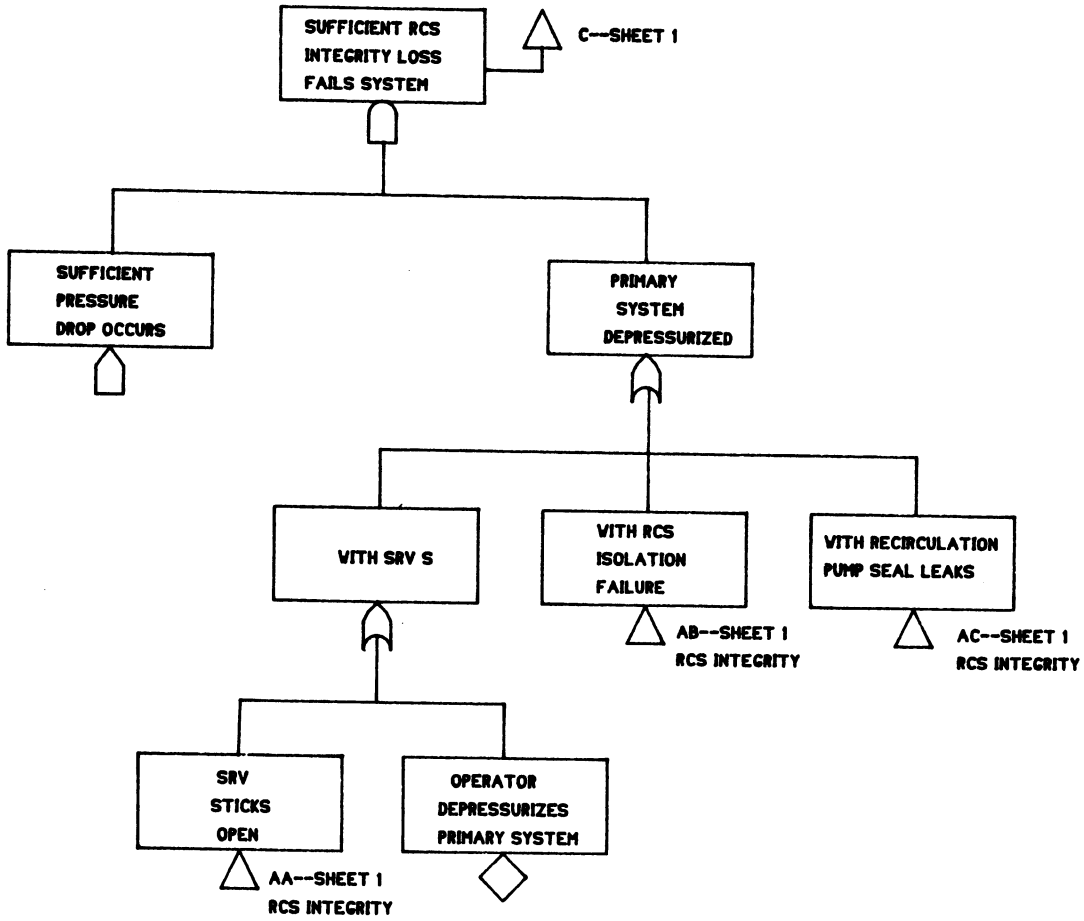

Figure C-5

BWR--ISOLATION
CONDENSOR FAILURE
(SHEET 4)

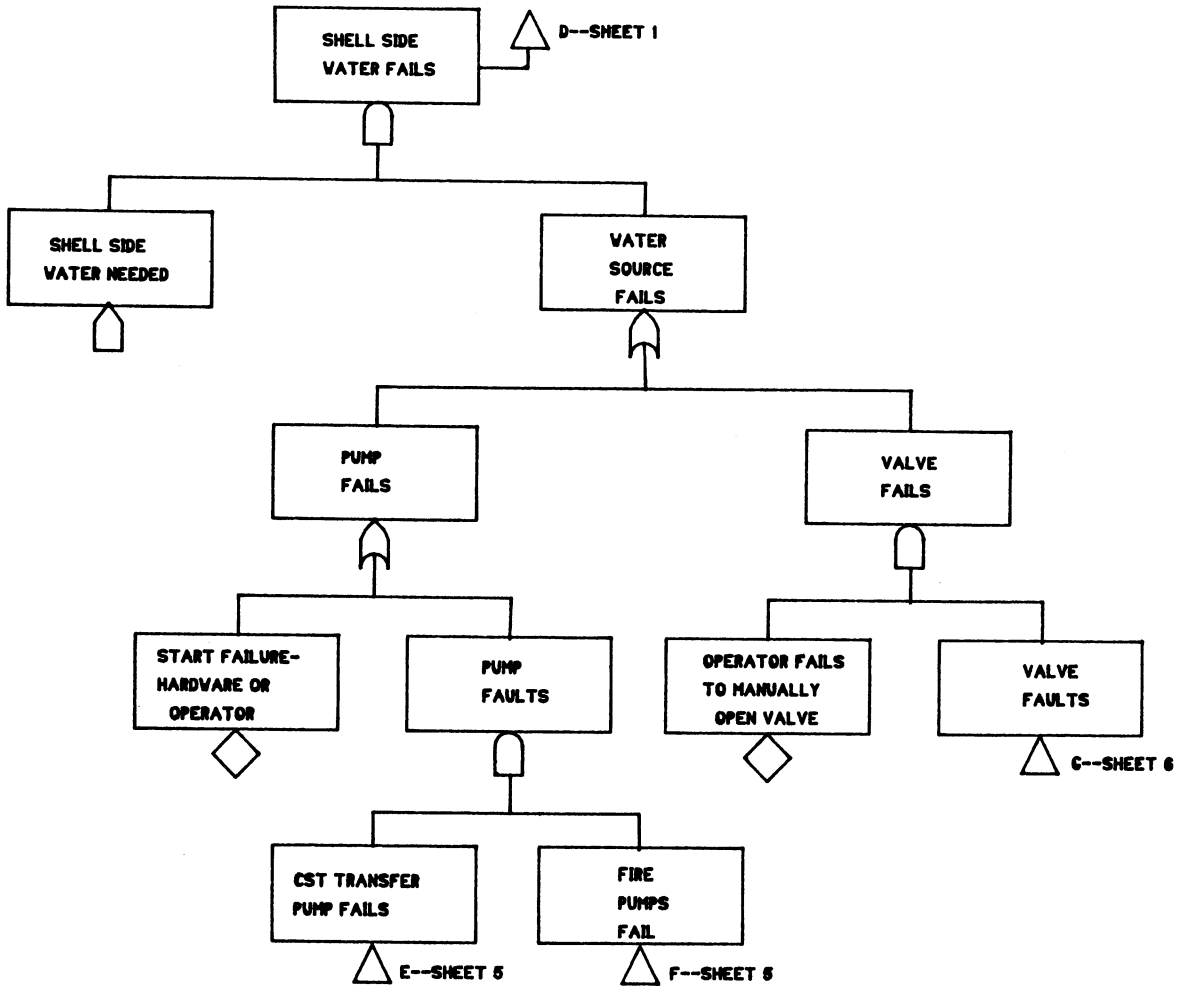

Figure C-5

BWR--ISOLATION
CONDENSOR FAILURE
(SHEET 5)

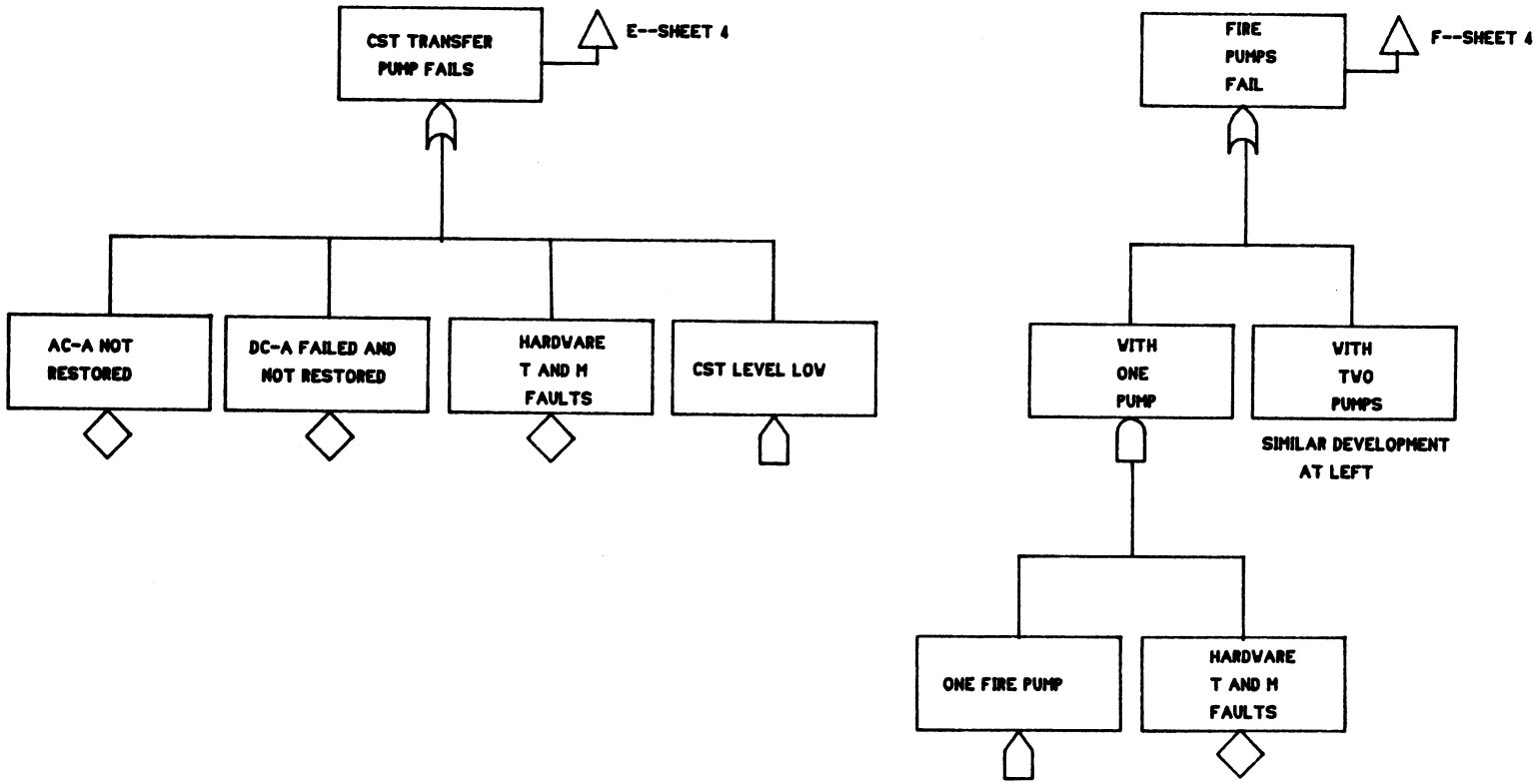

Figure C-5

BWR--ISOLATION
CONDENSOR FAILURE
(SHEET 6)

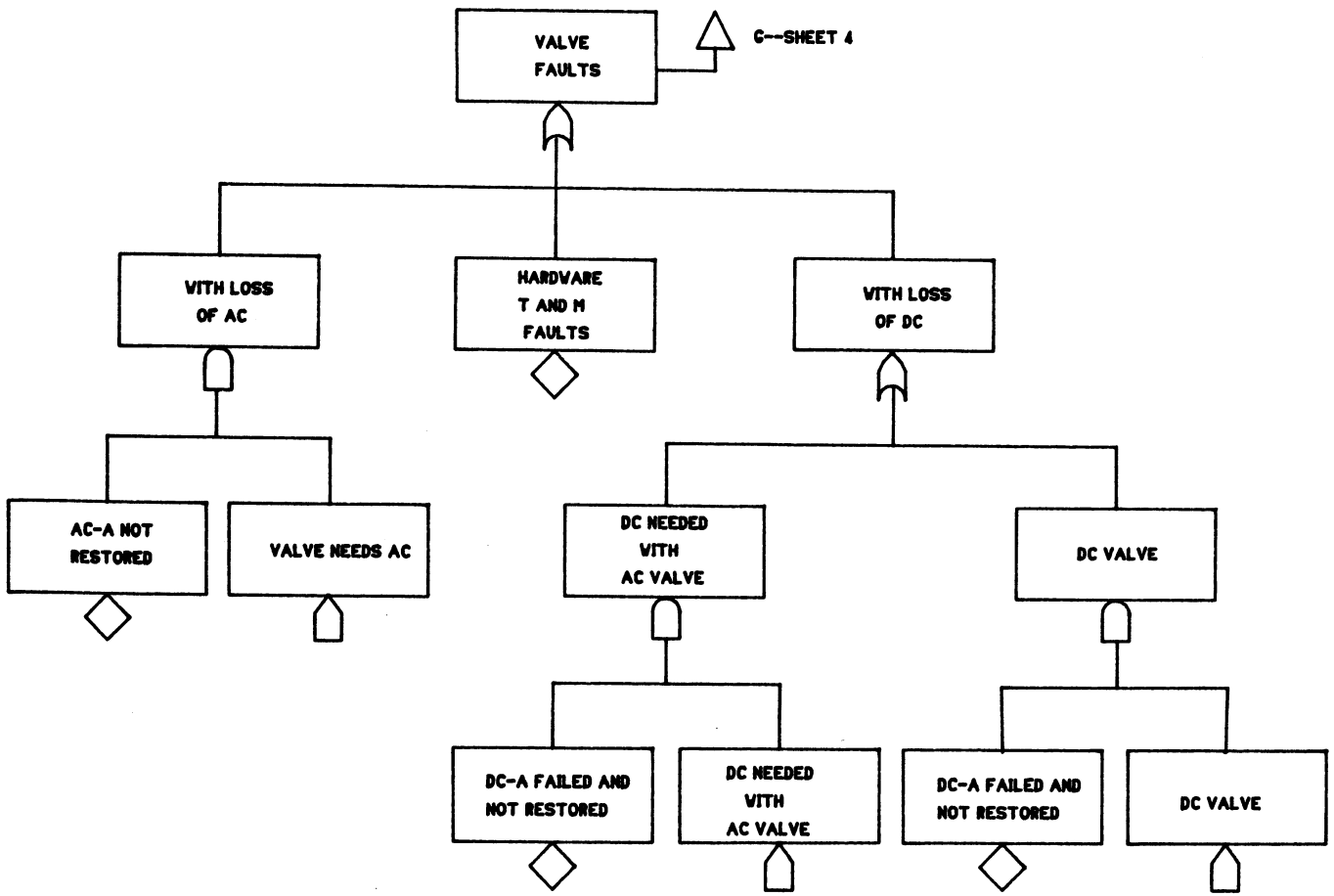

Figure C-6

BWR--HPCI / RCIC
FAILURE
(SHEET 1)

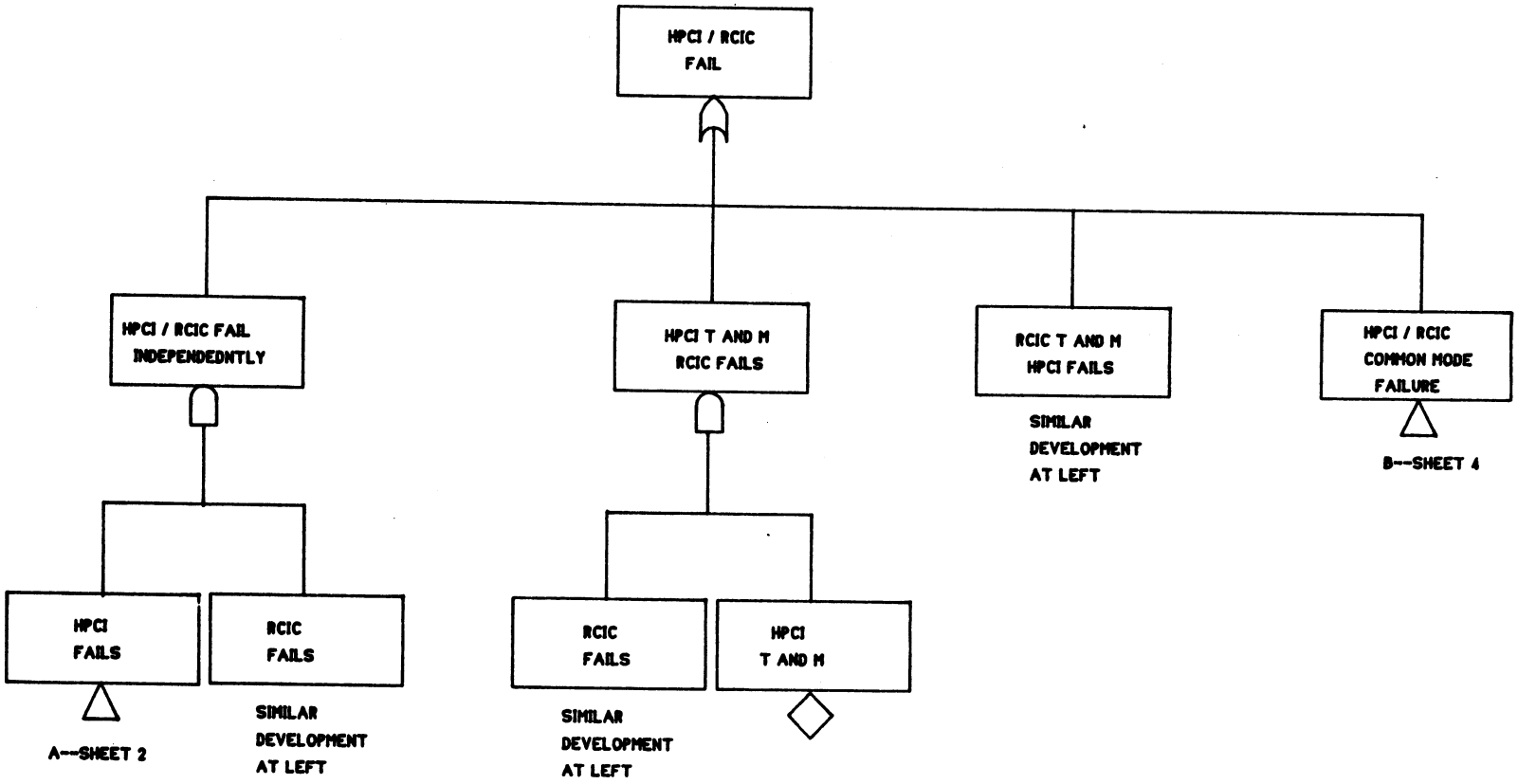

HPCS - DEVELOPMENT LIKE HPCI BUT ACCOUNTING FOR THIRD DEDICATED AC/DC/SERVICE WATER DIVISION AND W/O "RCS INTEGRITY LOSS" EFFECTS.

Figure C-6

BWR--HPCI / RCIC
FAILURE
(SHEET 2)

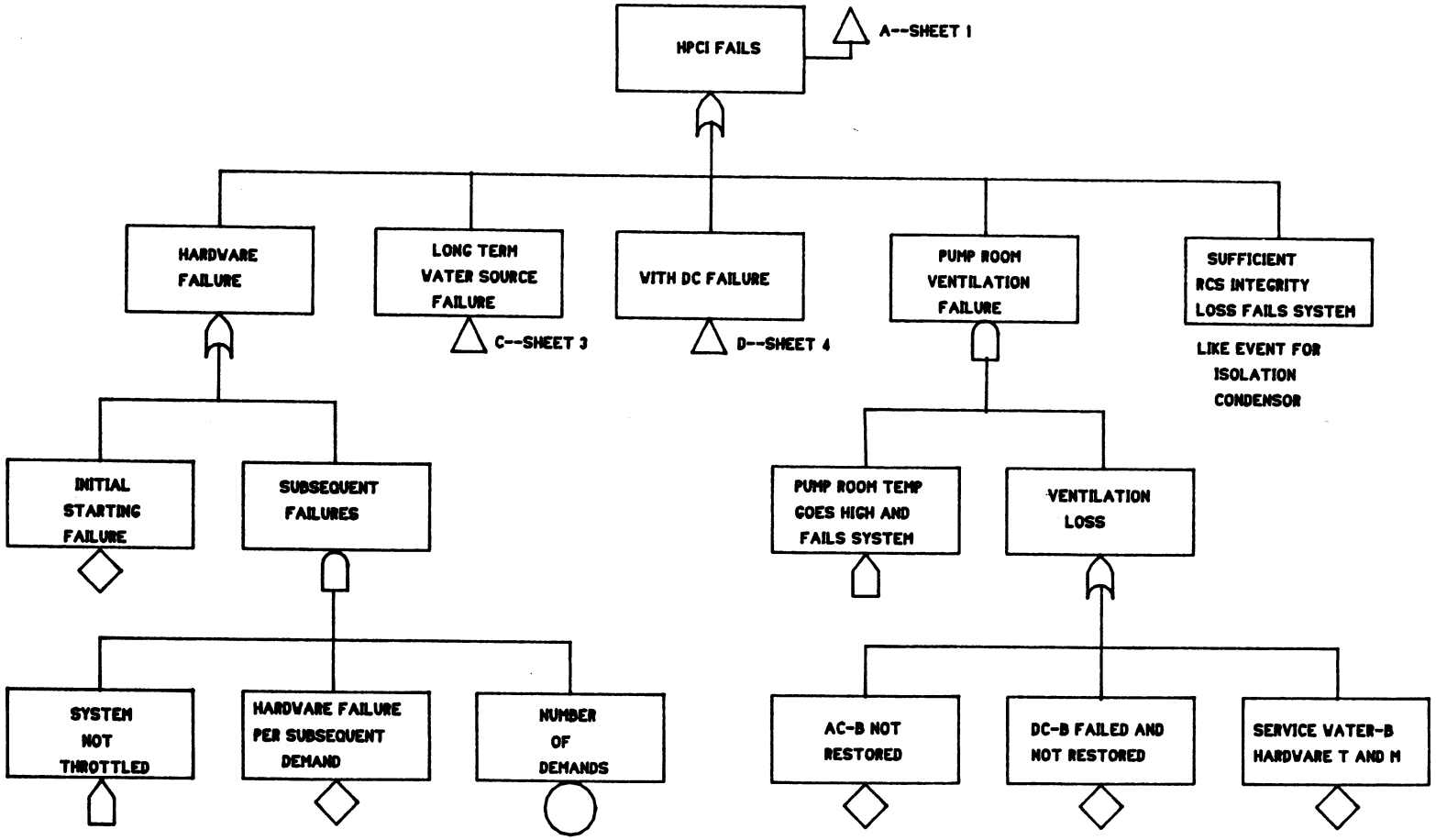

Figure C-6

BWR--HPCI / RCIC
FAILURE
(SHEET 3)

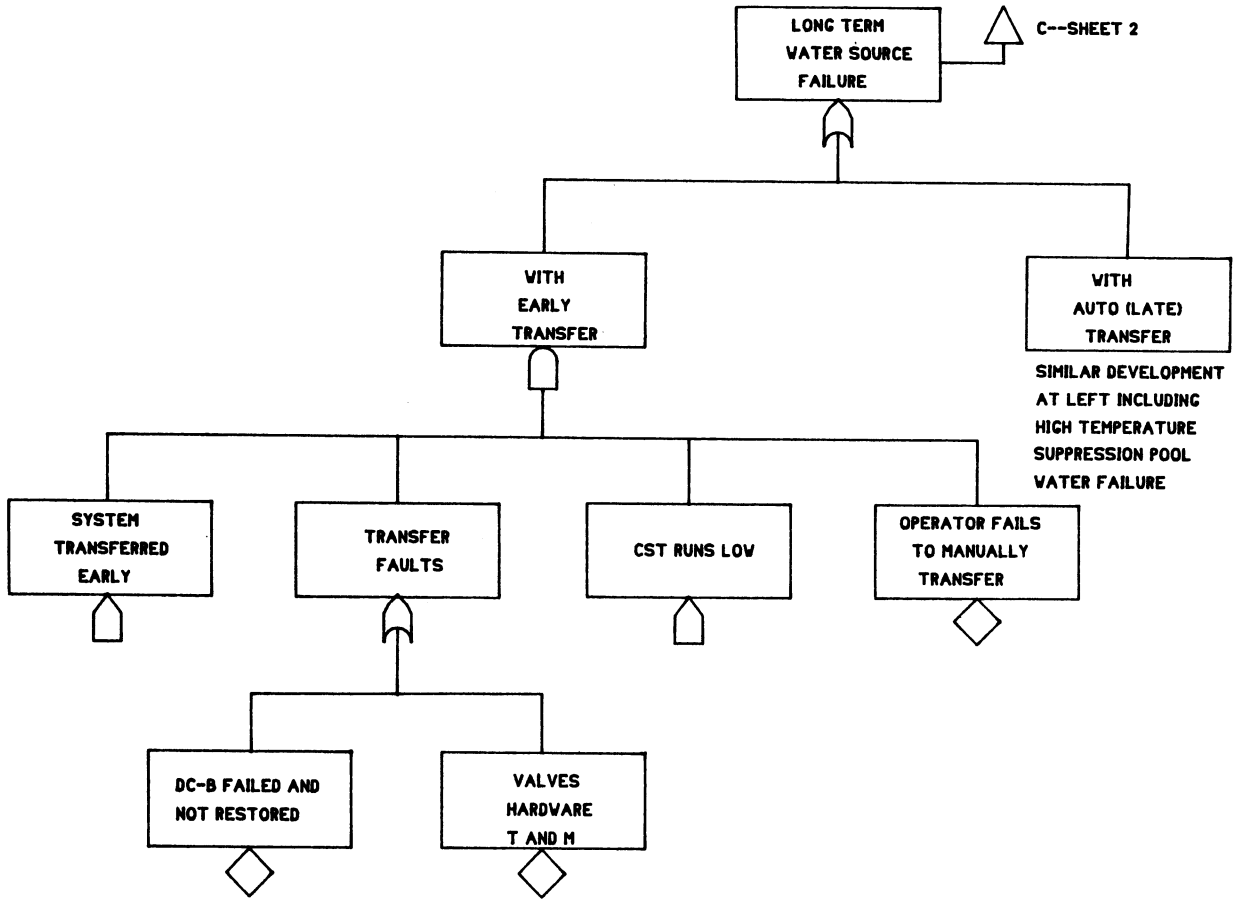

Figure C-6

BWR--HPCI / RCIC
FAILURE
(SHEET 4)

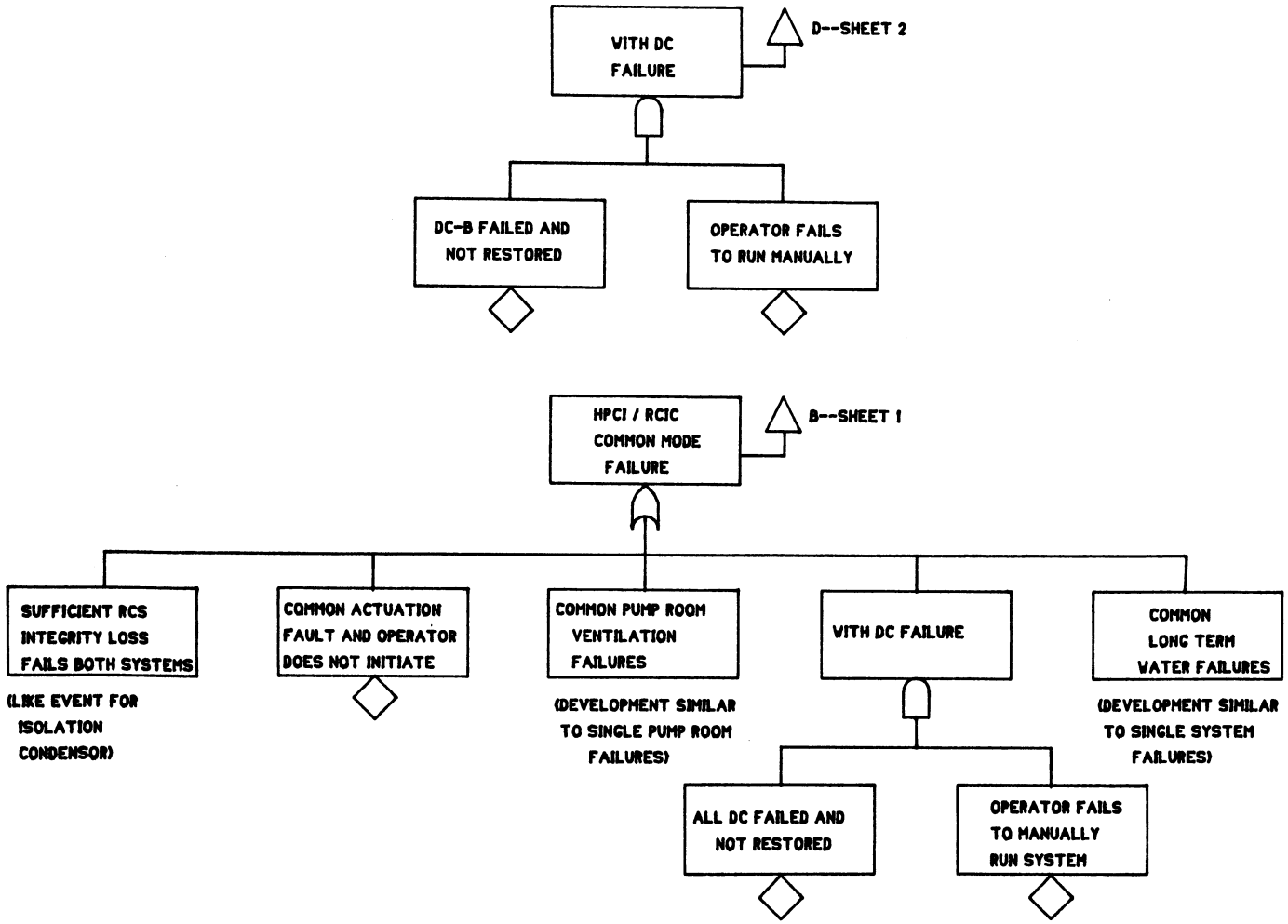

Figure C-7

BWR--APRS /ADS
FAILURE
(SHEET 1)

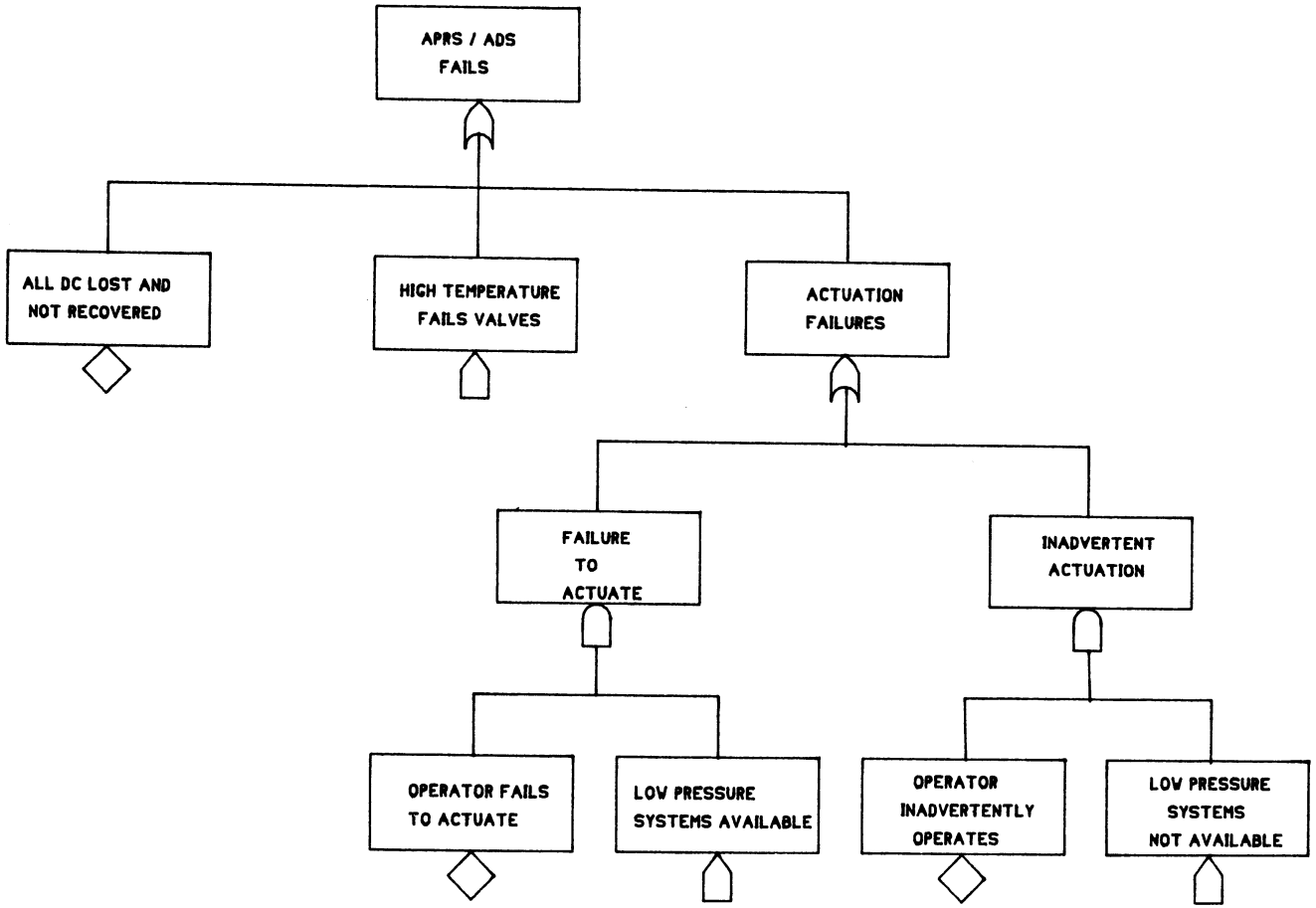

Figure C-8

BWR
AUTO FWCI FAILURE
(SHEET 1)

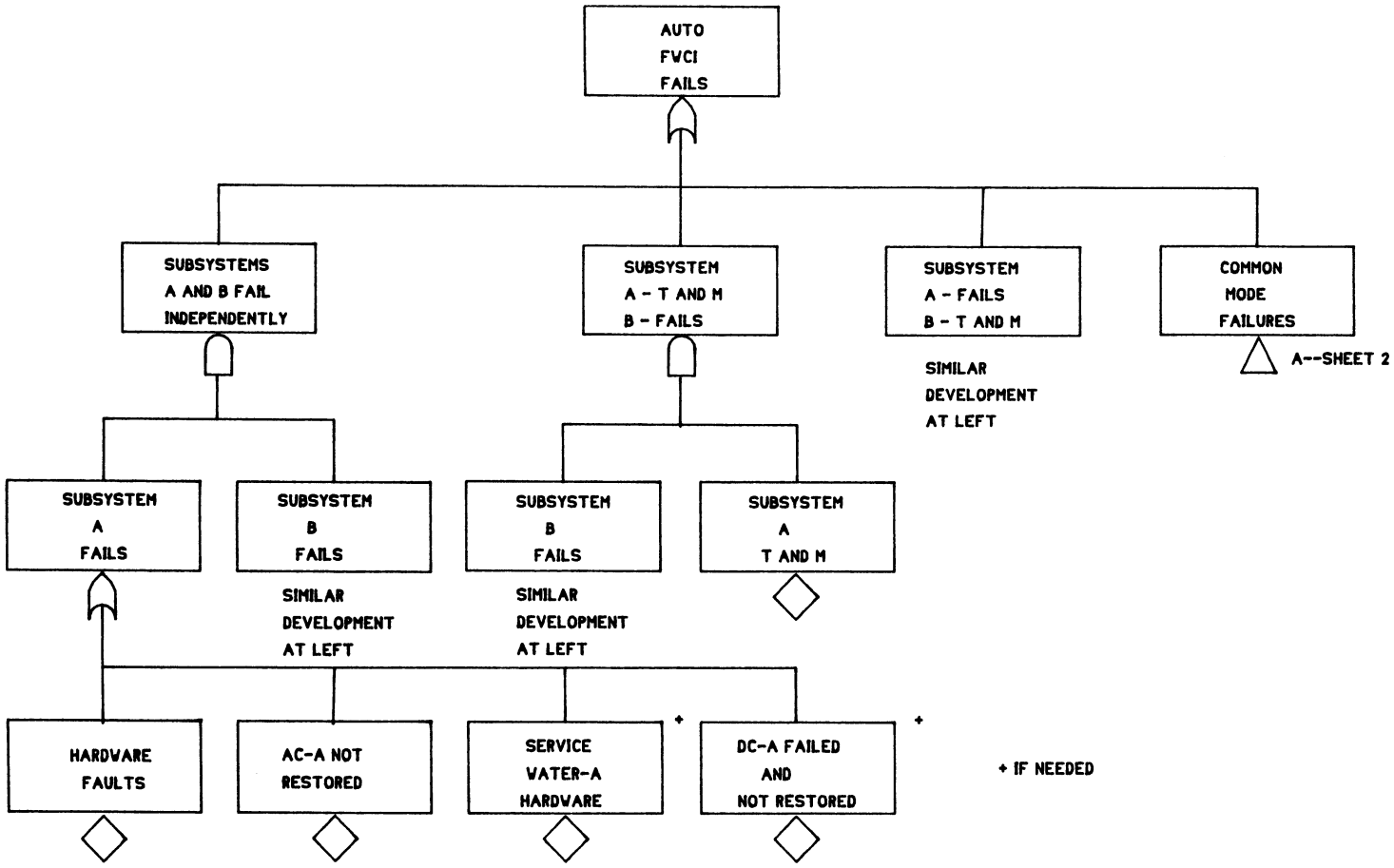

CONTAINMENT SPRAY, LPCS, LPCI, LPCRS - DEVELOPMENTS FOR THESE SYSTEMS LIKE THAT FOR AUTO FWCI.

Figure C-8

BWR
AUTO FWCI FAILURE
(SHEET 2)

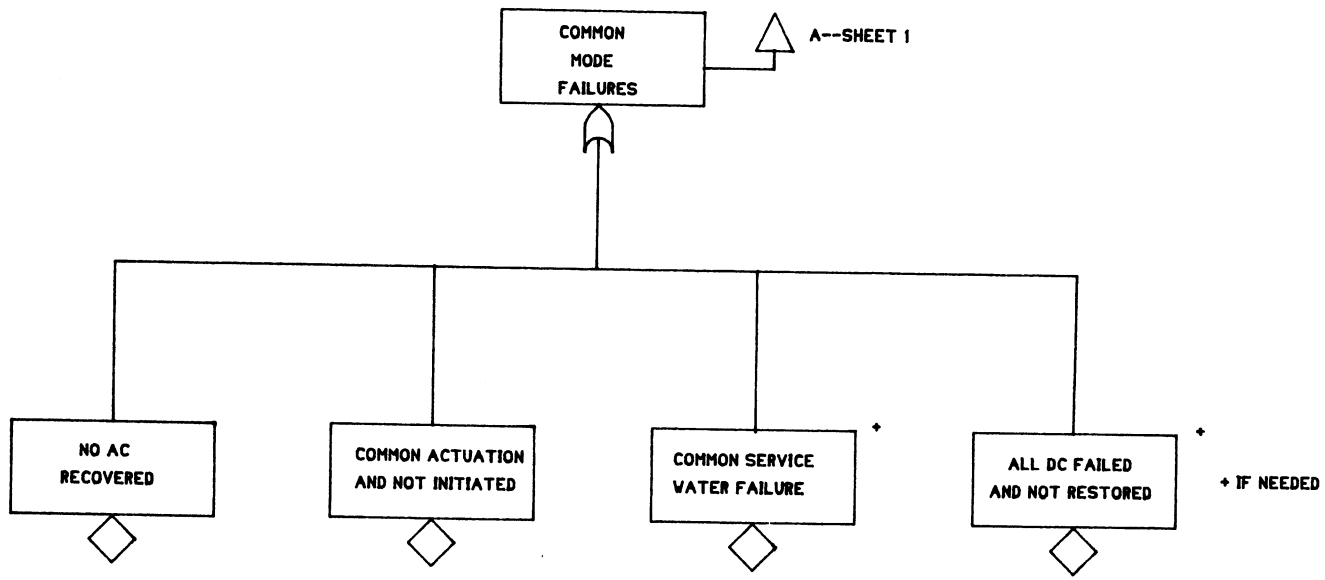

Figure C-9

BWR
MANUAL FWCI FAILURE
(SHEET 1)

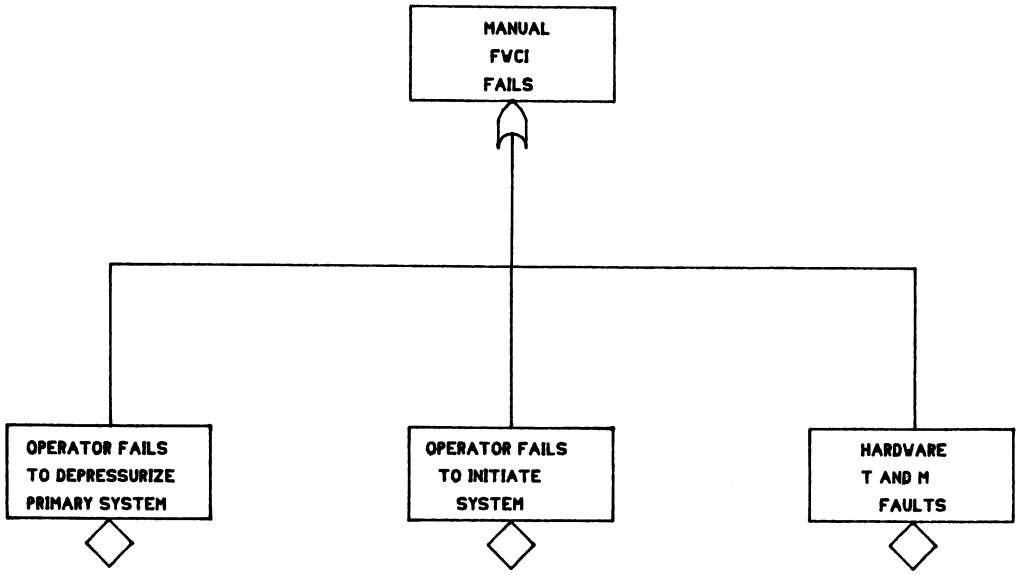

Appendix D

"Base" Plant Configuration Descriptions

This appendix contains a compilation of pertinent information regarding the "base" plant configurations referred to in the report. The information herein lists the system configurations and important dependencies used to model the major plant system configurations upon which the generic results and observations of this study are based. The configurations were formed using appropriate portions of the fault trees previously presented in Appendix C.

The fault trees in Appendix C allow many different system configurations to be modeled (e.g., we determined that there were about 15 different AFW systems). In order to minimize the amount of work necessary, a typical configuration was selected for each system. This configuration was chosen on the basis of: (1) the number of plants having similar configurations, and (2) if sensitivities could easily be done later to cover the other significantly different designs.

PWR Base Configuration Description

System	AC Power: Offsite	AC Power: Emergency Div. A	AC Power: Emergency Div. B	DC Power: Div. A	DC Power: Div. B	Self-Actuating	Other Factors
MFWS	X			X	X		
AFWS							
• Train A (steam turbine & valves)				X			
• Train B (motor pump & valves)	X		X		X		
HPIS							
• Train A (motor pump & valves)	X	X		X			Needs cooling water for pump & room cooling off same respective buses. Train C initially on "A" but switchable to "B"
• Train B (motor pump & valves)	X		X		X		
• Train C (motor pump)	X	X	X	X	X		
LPIS							
• Train A (motor pump & valves)	X	X		X			As above
• Train B (motor pump & valves)	X		X		X		

PWR Base Configuration Description

System	AC Power: Offsite	AC Power: Emergency Div. A	AC Power: Emergency Div. B	DC Power: Div. A.	DC Power: Div. B	Self-Actuating	Other Factors
CCW							
• Train A (motor pumps & valves)	X	X		X			Lumped CCW & service water system for simplicity. Assumed, therefore, self-cooled
• Train B (motor pumps & valves)	X		X		X		
RCS Isolation	X	X	X	X	X	X	Combinations of Dependencies Included
R_x Coolant Pump Seals	Assumed cooled using HPIS, but may be either CCW or HPIS						
PORVs							
1 Valve				X		X	
Block Valve	X	X					
SRVs							
2 Valves						X	
Emergency AC System							
• DG-A flashing & breakers				X			With & without CCW
• DG-B flashing & breakers					X		
DC System							Batteries: Possible Depletion or Temperature Degradation in ~5 hrs. w/o AC.
• Div. A, Charger(s)	X	X					
• Div. B, Charger(s)	X		X				
• Batteries							

BWR Configuration 1A Description

System	AC Power: Offsite	AC Power: Emergency Div. A	AC Power: Emergency Div. B	DC Power: Div. A	DC Power: Div. B	Self-Actuating	Other Factors
PCS	X			X	X		
SRVs (3 stage valves)				X	X	X	Some on Div. A & Some on B for Manual Operation
RCS Isolation	X	X	X	X	X	X	Combinations of Dependencies Included
Recirc. Pump Seals							
• Seal Cooling Water (2 sources)							
Train A	X	X		X			
Train B	X		X		X		
• Pump Isolation Valves	X			X			
Isolation Condenser (2 Condensers)							No Gravity Feed Tanks - Need Shell Side Water in 1 hr.
• Condensate Valve for Condenser A				X			
• Condensate Valve for Condenser B					X		
• Shell H_2O Valve A	X	X		X			
• Shell H_2O Valve B	X		X		X		
• CST Pump	X	X		X			
• 1 Fire Pump							Firepump: Dedicated Diesel and DC System
APRS				X	X		Either DC Train Sufficient

BWR Configuration 1A Description

System	AC Power Offsite	AC Power Emergency Div. A	AC Power Emergency Div. B	DC Power Div. A.	DC Power Div. B	Self-Actuating	Other Factors
LPCS/Cont't Cooling System							
• Train A (2 pumps & inject valves	X	X		X			Needs Service Water for Pump & Room Cooling (& heat exchangers for containment cooling) Off Same Buses as Respective Trains
•Train B (2 pumps & inject valves	X		X		X		
Service Water							
•Train A (1 pump & valves)	X	X		X			
•Train B (1 pump & valves)	X		X		X		
Emergency AC System							
•DG-A flashing & breakers				X			With & Without Need for Service Water for Cooling
•DG-B flashing & breakers					X		
DC System							
•Div. A, Charger(s)	X	X					
•Div. B, Charger(s)	X		X				
•Batteries							Batteries: Possible Depletion or Temp. Degradation Effects in ~5 Hours w/o AC.

BWR Configuration 1B Description

System	AC Power: Offsite	AC Power: Emergency Div. A	AC Power: Emergency Div. B	DC Power Div. A	DC Power Div. B	Self-Actuating	Other Factors
PCS	X			X	X		
SRVs (3-stage valves)				X	X	X	Some on Div. A & Some on B for Manual Operation
RCS Isolation	X	X	X	X	X	X	Combinations of Dependencies Included
Recirc. Pump Seals							
•Seal Cooling Water (2 Sources)							
Train A	X	X		X			
Train B	X		X		X		
•Pump Isolation Valves	X			X			
Isolation Condenser (1 Condenser)							No Gravity Feed Tanks-Need Shell Side Water in 1 Hour
•Condensate Valve				X			
•Shell H_2O Valve	X	X		X			
•CST Pump	X	X		X			
•1 Fire Pump							Firepump: Dedicated Diesel and DC System
APRS				X	X		Either DC Train Sufficient

BWR Configuration 1B Description

System	AC Power Offsite	AC Power Emergency Div. A	AC Power Emergency Div. B	DC Power Div. A	DC Power Div. B	Self-Actuating	Other Factors
LPCS							
Train A (1 Pump & Valves)	X	X		X			Needs Service Water for Pump & Room Cooling Off Same Buses as Respective Trains
Train B (1 Pump & Valves)	X		X		X		
LPCI/LPCRS							
Train A (2 Pumps & Valves)	X	X		X			As Above (& for Heat Exchangers in LPCRS Mode)
Train B (2 Pumps & Valves)	X		X		X		
Service Water							
•Train A (1 Pump & Valves)	X	X		X			
•Train B (1 Pump & Valves)	X		X		X		
Emergency AC System							
•DG-A flashing & breakers				X			With & Without Need for Service Water for Cooling
•DG-B flashing & breakers					X		
DC System							
•Div. A, Charger(s)	X	X					
•Div. B, Charger(s)	X		X				
•Batteries							Batteries: Possible Depletion or Temp. Degradation Effects in ~5 Hours w/o AC.

BWR Configuration 2 Description

System	AC Power Offsite	AC Power Emergency Div. A	AC Power Emergency Div. B	DC Power Div. A	DC Power Div. B	Self-Actuating	Other Factors
PCS	X			X	X		
SRVs (3 stage valves)				X	X	X	Some on Div. A & Some on B for Manual Operation
RCS Isolation	X	X	X	X	X	X	Combinations of Dependencies Included
Recirc. Pump Seals							
•Seal Cooling water (2 Sources)							
Train A	X	X		X			
Train B	X		X		X		
RCIC				X			Needs Ventilation (Service Water-A) ~5 Hours
HPCI					X		Needs Ventilation (Service Water-B) ~5 Hours
ADS				X	X		Either DC Train Sufficient
LPCS							
•Train A (1 Pump & Valves)	X	X		X			Needs Service Water for Pump & Room Cooling Off Same Buses as Respective Trains
•Train B (1 Pump & Valves)	X		X		X		
LPCI/LPCRS							
•Train A (2 Pumps & Valves)	X	X		X			As Above (& for Heat Exchangers in LPCRS Mode
•Train B (2 Pumps & Valves)	X		X		X		

BWR Configuration 2 Description

System	AC Power Offsite	AC Power Emergency Div. A	AC Power Emergency Div. B	DC Power Div. A	DC Power Div. B	Self-Actuating	Other Factors
Service Water							
•Train A (1 Pump & Valves)	X	X		X			
•Train B (1 Pump & Valves)	X		X		X		
Emergency AC System							
•DG-A flashing & breakers				X			With & Without Need for Service Water for Cooling
•DG-B flashing & breakers					X		
DC System							
•Div. A, Charger(s)	X	X					
•Div. B, Charger(s)	X		X				
•Batteries							Batteries: Possible Depletion or Temp. Degradation Effects ~5 Hours w/o AC.

BWR Configuration 3 Description

System	AC Power Offsite	AC Power Emergency Div. A	AC Power Emergency Div. B	DC Power Div. A	DC Power Div. B	Self-Actuating	Other Factors
PCS	X			X	X		
SRVs (Crosby/Dikkers Valves)				X	X	X	Some on Div. A & Some on B for Manual Operation
RCS Isolation	X	X	X	X	X	X	Combinations of Dependencies Included
Recirc. Pump Seals							
•Seal Cooling Water (2 Sources)							
Train A	X	X		X			
Train B	X		X		X		
RCIC				X			Needs Ventilation (service water-A) 5 Hours
HPCS							Has Dedicated 3rd Train of AC, DC, Cooling...
ADS				X	X		Either DC Train Sufficient
LPCS Only 1 Train (1 Pump & Valves)	X	X		X			Needs Service Water for Pump & Room Cooling Off Division A
LPCI							
•Train A (1 Pump & Valves)	X	X		X			As Above for Respective Trains
•Train B (2 Loops; 1 Pump & Valves in Each Loop)	X		X		X		

BWR Configuration 3 Description

System	AC power: Offsite	AC power: Emergency Div. A	AC power: Emergency Div. B	DC Power Div. A	DC Power Div. B	Self-Actuating	Other Factors
LPCRS							
•Train A (1 Pump & Valves)	X	X		X			As Above (Also Need Service Water for Heat Exchangers)
•Train B (1 Pump & Valves)	X		X		X		
Service Water							
•Train A (1 Pump & Valves)	X	X		X			
•Train B (1 Pump & Valves)	X		X		X		
•Dedicated "C" Division	X						Used for HPCS
Emergency AC System							
•DG-A flashing & breakers				X			With and Without Need for Service Water for Cooling
•DG-B flashing & breakers					X		
•Dedicated "C" Division							Used for HPCS
DC System							
•Div. A, Charger(s)	X	X					
•Div. B, Charger(s)	X		X				
•Batteries (Div. A&B)							Batteries: Possible Depletion or Temp. Degradation Effects ~5 Hours w/o AC.
•Dedicated "C" Division							Used for HPCS

Appendix E

Data

Tables

Table		Page
E-1	Basic Component Data	228
E-2	PWR Approximate System Hardware Unavailability on Demand	230
E-3	PWR Approximate System T&M Unavailability on Demand	231
E-4	BWR Approximate System Hardware Unavailability on Demand	232
E-5	BWR Approximate system T&M Unavailability on Demand	233

INTRODUCTION

This appendix contains a summary of the data used in the station blackout study in order to quantify the various accident sequences. To the extent possible, data information already available was used in this program. However, past data was closely examined to determine applicability of the data considering post-TMI changes to design and operation. As a result, for example, some prior failure modes contributing to the data were either discarded or subjectively lessened in probability of occurrence when the station blackout program data base was derived.

In the following tables are lists of the data information sources from which the station blackout data base was derived. Using this information as well as other sources noted, considering post-TMI improvements, and using some engineering judgment, the station blackout data base was formed as listed. It is felt the values represent reasonable judgments as to generic values for the items shown. For the data which was found to contribute significantly to the dominant accident sequences, uncertainty bounds were assigned assuming the original data was a median. It should be noted that the uncertainty bounds represent more than just statistical variations in the data; implicitly included are variations due to subtle design and/or operational differences from plant to plant. (For example, pump maintenance may be done differently at two plants, and this would be reflected as a difference in pump unavailability due to maintenance.)

The data collection was done in several parts. First, generic component data from PRAs, generic feedwater studies, the DC Power Study, NRC Data Summaries, and utility responses to NUREG-0737 were obtained (References 3-10, 26-29, 35, 52-55,63). This data is listed in Table E-1 and includes both hardware and test and maintenance unavailabilities. The generic value used in this report is shown in the last column. (Note: Because we did not know exactly what kind of data we would need, we gathered more data than necessary, and so not all values were actually used in the final analysis of the station blackout models.)

Second, in Tables E-2 through E-5, PWR and BWR system data is summarized regarding approximate hardware and T&M unavailabilities on a per train basis with support system contributions removed. Similarly, the generic values used in this study are shown. Where common mode hardware failures (failures that would make more than one train of the system unavailable) appeared potentially significant, these are also summarized.

Third, the Severe Accident Sequence Analysis (SASA) program sponsored by Nuclear Regulatory Commission (NRC) has provided a considerable amount of data[31-34] particularly in the area of accident sequence timing which supplements information available in PRAs and FSARs. Specific station blackout associated sequences were run for use in this program. The types of sequences run include: (a) all heat removal and makeup failed, RCS integrity

intact; (b) AC-independent heat removal operating, RCS integrity failed; and (c) all heat removal makeup failed, RCS integrity failed. Variables included such items as plant design, initial RCS leak rate, time of RCS integrity failure, and time of AC-independent heat removal failure. This data, as well as insights provided by the other sources of information indicated, was used for much of the sequence timing data required for the analyses in this program. (A summary of the SASA data is given on the pages following the data tables under "timing" for both PWRs and BWRs.)

Fourth and last, miscellaneous data not already covered is required for the fault trees. For the generic cases, the data used is listed below for PWRs and BWRs separately and comes primarily from a review of the references noted in each case. For the human-related errors, it should be noted that the specific cases of concern are not necessarily covered in the handbook[56]. However, the handbook was used to provide general guidance as to an appropriate value to be used.

Table E-1

Basic Component Data (Approximate Values for Hardware and T&M)

Component \ Source	WASH-1400 and Sequoyah	Oconee	Zion	CR-3	Limerick	Grand Gulf	Big Rock Point	Generic Feedwater Study	NRC LER Data Summary	DC Power Study	PWR NUREG -0737-	BWR NUREG -0737-	Value Used in This Study
	← PRAs →												
A. Standby Pumps													
1. Motor Pumps													
Start	1E-3/D	3E-3/D	7E-4/D 6E-3/D (AFW)	1E-3/D	3E-3/D	2E-3/D	5E-4/D	5E-3/D	1E-2/D** 8-3E-3/D*	---	---	---	2E-3/D
Run	3E-5/hr 1E-3/hr (extreme)	3E-5/hr	15-1E-6/hr 1E-4/hr (AFW)	3E-5/hr	9E-6/hr	3E-5/hr	4E-6/hr	2E-4/hr	3-2E-5/hr** 10-8E-6/hr*	---	---	---	2E-5/hr
2. Turbine Pumps													
Start	1E-3/D	9E-2/D	1E-2/D	2E-2/D	---	5E-3/D	---	5E-3/D	9-5E-2/D** 6-3E-2/D*	---	---	---	2E-2/D
Run	3E-5/hr 1E-3/hr (extreme)	3E-5/hr	8E-6/hr	3E-5/hr	1E-5/hr	3E-5/hr	2E-5/hr	2E-4/hr	3-2E-4/hr** 20-9E-5/hr*	---	---	---	5E-5/D
3. Diesel Pumps													
Start	1E-3/D	---	4-3E-3/D	---	---	---	1E-2/D	---	8-5E-2/D** 4E-2/D*	---	---	---	2E-2/D
Run	3E-5/hr 1E-3/hr (extreme)	---	---	---	---	---	2E-5/hr	---	2-1E-4/hr** 2E-4/hr*	---	---	---	1E-4/hr
B. Valves (Operate)													
1. Manual	1E-4/D	1E-4/D	---	1E-4/D	1E-4/D	1E-4/D	1E-4/D	1E-4/D	2E-3/D	---	---	---	5E-4/D
2. Air-Operated	3E-4/D	7E-3/D	1E-3/D	3E-4/D	3E-4/D	7E-3/D	3E-4/D	3E-4/D	2E-2/D	---	---	---	3E-3/D

*Without Control Faults
**With Control Faults

Table E-1 (Continued)

Component \ Source	WASH-1400 and Sequoyah	Oconee	Zion	CR-3	Limerick	Grand Gulf	Big Rock Point	Generic Feedwater Study	NRC LER Data Summary	DC Power Study	PWR NUREG -0737-	BWR NUREG -0737-	Value Used in This Study
	← PRAs →												
3. Motor Operated	1E-3/D	7E-3/D	2E-3/D	1E-3/D	3-1E-3/D	1E-3/D	7E-3/D	3E-3/D	9E-3/D	---	---	---	3E-3/D
4. Solenoid Operated	1E-3/D	---	---	1E-3/D	1E-3/D	---	1E-3/D	1E-3/D	2E-2/D	---	---	---	5E-3/D
5. Check Valves	1E-4/D	1E-4/D	4E-3/D 1E-4/D	1E-4/D	2E-6/hr	1E-4/D	1E-4/D	1E-4/D	6E-3/D	---	---	---	1E-3/D
6. All Valves Plugged	1E-4/D	1E-4/D	60-2E-5/D	1E-4/D	1E-4/D	1E-4/D	1E-4/D	1E-4/D	1E-7/hr	---	---	---	1E-4/D
D. Battery	1E-3/D 3E-6/hr	---	3E-5/D 8E-8/hr	3E-6/hr	3E-6/hr	1E-3/D	3E-6/hr	---	---	1E-4/D*	---	---	1E-4/D
E. Battery Charger	---	---	6E-7/hr	---	---	---	---	---	---	4E-6/hr	---	---	2E-6/hr
F. T&M													
1. Valves	Monthly 3E-3/D Quarterly 3E-3/D	2E-3/D	3E-4	1E-3/D	---	6E-3/D	40-6E-5/D	Monthly 3E-3/D Quarterly 3E-3/D	---	---	1E-3/D (7E-3- 1E-5)	2E-3/D (2E-2 -<E-4)	1E-3/D
2. Pumps	Monthly 8-4E-3/D	2E-3/D	7E-4/D	5E-4/D				Monthly 8-4E-3/D			4E-3/D (7E-2-E-5)	6E-3/D (5E-2 -<E-4)	
Motors	Quarterly 6-3E-3/D	6E-3/D (AFW)	1E-2/D (AFW)	3E-3/D (AFW)	---	6E-3/D	70-1E-4/D	Quarterly 6-3E-3/D	---	2E-3/D	7E-3/D (AFW) (E-2-2 E-4)		5 E-3/D
Turbine	---	6E-3/D	4E-2/D	3E-3/D	---	6E-3/D	---	---	---	8E-3/D	3E-2/D (5E-2/- 3E-3)	9E-3/D (4xE-2 -<E-4)	5E-3/D

*With Improvements as Recommended

Table E-2

PWR Approximate System Hardware Unavailability on Demand (One Train and Common Mode)

System \ Source	WASH-1400 (Surry)	Sequoyah	Oconee	Zion	CR-3	Value Used in This Study
1. AFW						
Turbine Train	8E-3	5E-3	1E-1	1E-2	2E-2	2E-2
Motor Train	1E-2	2E-3	1E-2	6E-3	4E-3	5E-3
Common Mode	1E-4	3E-3	< 1E-6	< 1E-6	1E-5	1E-4
2. LPI						
One Train	1E-2	4E-3	8E-3	9E-4	1E-2	3E-3
Common Mode	3E-3	1E-3	4E-4	8E-5	1E-5	2E-4
3. HPI						
One Train	3E-2	3E-2	2E-2	5E-3	5E-2	2E-2
Common Mode	5E-5	<1E-6	4E-4	4E-5	3E-4	5E-5
4. CCW						
One Train	2E-3	2E-3	1E-2	8E-4	3E-3	2E-3
Common Mode	6E-3	1E-5	< 1E-6	< 1E-6	< 1E-6	8E-5

Table E-3

PWR Approximate System T&M Unavailability on Demand (One Train)

System \ Source	WASH-1400 (Surry)	Sequoyah	Oconee	Zion	CR-3	NUREG-0737 Responses Average and Range	Value Used in This Study
1. AFW							
Turbine Train	1E-2	1E-2	1E-2	4E-2	7E-3	3E-2 (5E-2-9E-3)	2E-2
Motor Train	8E-3	1E-2	1E-2	1E-2	6E-3	6E-3 (2E-2-2E-4)	5E-3
2. LPI	4E-3	2E-3	1E-2	4E-3	9E-3	2E-3 (7E-3-2E-4)	2E-3
3. HPI	2E-2	2E-3	4E-3	5-1E-3	1E-3	2E-3 (7E-3-6E-5)	2E-3
4. CCW	6E-3	6E-3	8E-3	---	2E-3	1E-3 (5E-3-6E-5)	2E-3

Note (1) For operating systems we know that at least one train cannot be down for T&M.

(2) Possible common mode T&M contribution for two trains from NUREG-0737 responses: HPI-5E-4, CCW-2E-5.

Table E-4

BWR Approximate System Hardware Unavailability on Demand

System \ Source	WASH-1400	Grand Gulf	Limerick	Big Rock Point[2]	Estimate Based on Component Data[4]	Value Used in This Study
Auto FWCI 1 Train	---	---	---	---	1E-2	1E-2
Manual FWCI	---	---	---	(1) 1E-2, 3E-3	2E-2[1]	1E-2
Isolation Condenser						
1 Condenser only	---	---	---	1E-3, 2E-2	3E-3	3E-3
2 Condensers -- each train	---	---	---	---	3E-3	3E-3
HPCI	2E-2	---	6E-2	---	---	3E-2
RCIC	1E-2	1E-2	7E-2	---	---	3E-2
HPCS	---	4E-2	---	---	4E-2	4E-2[6]
ADS/APRS[3]	2E-3	2E-3	2E-3	---	---	5E-3
LPCS (BWR-2s) Cont't Spray 1 Train	---	---	---	---	1E-4	1E-4
LPCS (later designs) 1 Train	1E-3	5E-3	?	---	---	2E-3
LPCI 1 Train	1E-3	5E-3	?	---	---	2E-3
LPCRS -- 1 Train						
RHR	< 1E-4	3E-3	?	---	---	5E-4
Serv. Water	2E-4	1E-2	?	---	---	2E-3
SDCS -- 1 Train					8E-3	8E-3
-- Common Mode					1E-2	1E-2

Notes:
(1) Based on diesel fire pump.
(2) Generic vs. PRA data shown as reported in PRA.
(3) Operator failure to actuate.
(4) Used where 1 or less data sources exist.
(5) Common hardware faults between trains of a given system all appear insignificant except for SDCS.
(6) Includes dedicated diesel and service water contribution.

Table E-5

BWR Approximate System T&M Unavailability on Demand

System \ Source	Average (Range) NUREG-0737 Responses	WASH-1400	Grand Gulf	Limerick	Big Rock Point	Estimate Based on[3] Component Data	Value Used in This Study
Auto FWCI 1 Train	3E-3 (3E-3)	---	---	---	---	5E-3	3E-3
Manual FWCI	<1E-4[1] (<1E-4)	---	---	---	1E-4[1]	---	1E-4
Isolation Condenser							
1 Condenser only	2E-3 (Note 2)	---	---	---	1E-2	---	2E-3
1 of 2 Condensers	2E-3 (Note 2)	---	---	---	---	3E-3	2E-3
HPCI	2E-2 (7E-2-<1E-3)	8E-2	---	1E-2	---	---	1E-2
RCIC	3E-2 (9E-2-5E-3)	7E-2	4E-2	1E-2	---	---	2E-2
HPCS	---	---	3E-2	---	---	1E-2	2E-2[4]
ADS/APRS	negl.	negl.	negl.	negl.	---	---	negl.
Cont't Spray 1 Train	3E-4 (9E-4-<1E-4)	---	---	---	---	3E-3	5E-4
LPCS -- 1 Train							
BWR -- 2s	4E-3 (9E-3-<1E-4)	---	---	---	---	3E-3	3E-3
Later BWRs	1E-3 (3E-3-<1E-4)	4E-2	3E-2	2E-3	---	---	2E-3
LPCI 1 Train	5E-3 (2E-2-2E-4)	2E-2	2E-2	4E-3	---	---	5E-3
LPCRS -- 1 Train							
RHR	6E-3	<1E-4	1E-2	4E-3	---	---	5E-3
Serv. wtr.	(2E-2-3E-4)	<1E-4	4E-2	2E-3	---	---	2E-3
SDCS -- 1 Train						2E-3	2E-3
-- Common Mode						1E-3	1E-3

Notes:
(1) Based on diesel fire pump data.
(2) Counting unusually long outages, have been .07 and 0.51 respectively.
(3) Used where only one other data source exists.
(4) Includes dedicated diesel and service water contribution.

PWR

Timing [3-6,10,12,14-19,26-28,31,32,47,48,50,52,63]:

- Early core damage sequences occur in 1/2 to 1-1/2 hours depending on the plant and whether a LOCA exists. (See dominant sequence discussions in the main report.)
- Battery depletion or temperature effects occur in 5 hours.
- System failure in 5 hours leads to core damage in ~1 to 3 more hours (@ 6-8 hours).
- System failure or long-term water depletion in 8 hours leads to core damage in ~2 to 4 more hours (@ 10-12 hours).

Human errors [3-14,26-28,56,63]:

- Early failures of semi-routine steps such as failure to actuate AFWS given auto start failure assessed as 1E-2 - 1E-3.
- Long-term failures such as switching to alternate water source assessed as 1E-3 (long-term expected events).
- Failure to operate AFWS without AC/DC power - @ 0.5.

Auto start signal failures [3-14,26-28,63]: 1E-3

PORVs, SVs, Block Valves [26-28,31,32,43-45]:

- PORV demand probability in 15-200 seconds with AFWS success is 0.1.
- PORVs virtually open if AFWS fails.
- PORV fail-open probability is 2E-2.
- PORV fail-closed probability is 5E-3.
- SVs demanded in 1000-4000 seconds only with no AFWS and PORVs closed.
- SV fail-open probability is 1E-3.
- Block valve fail-open or fail-closed probability is 3E-4.
- At least 2 PORVs needed to perform "feed and bleed" without AFWS cooling for plants with low head pumps.
- Block valves are closed nearly 100 percent of the time on about 50 percent of the plants.

Failure to close unisolated RCS line(s) [11-14,56]:

1/2 hr - 0.5
1 hr - 0.25
2 hr - 3E-2
>2 hr - 3E-3

BWR

Timing [3,7-9,11,13,20-25,29,33,34,47,50,52]:

- Early core damage sequences occur in 1/4 hour to 2 hours depending on plant and whether a LOCA exists. (See dominant sequence discussion in main report.)
- Battery depletion or temperature effects occur in 5 hours.
- System failure in 5 hours leads to core damage in ~2 to 3 more hours (@ 7 to 8 hours)
- System failure or long-term water depletion in 8 hours leads to core damage in ~3 to 4 more hours (@ 11 to 12 hours).
- Isolation condenser shell-side water needed in about 1 hour - failure leads to core damage in 1-1/2 to 2 hours.

HPCS, HPCI, RCIC [3,7,8,11,20,21,25,29,33,34,47,50,52,69]:

- RCIC normally throttled; HPCS, HPCI not throttled.
- All systems not normally transferred early from CST to suppression pool; 1E-2 failure probability on transfer to pool due to sudden temperature change.
- Number of subsequent HPCI demands in 8 hours following early failure of RCIC is 10 with failure probability of 1E-2 per demand. Number of subsequent HPCI demands in 3 more hours following RCIC failure in ~5 hours is 3 with same failure probability. Number of HPCI demands in 4 more hours following RCIC failure in ~8 hours is 1 with same failure probability. Same applies to HPCS but with failure set at 8E-3 per demand.
- Pump room temperature isolates HPCI/RCIC by 5 hours when one system is used while the other is unavailable or at 8 hours if both systems are used.
- Operator failure to transfer from CST to suppression pool after auto transfer fails - 0.5 (little time).
- Sufficient pressure drop occurs to isolate system in ~3 to 12 hours:

RCIC - 0.05
HPCI - 0.1

- Operator fails to manually (local) run HPCI/RCIC:

<1 hour - 1.0
after battery depletion - 0.5 (adverse temperature environment).

Isolation condenser human actions [13,56]:

- Operator fails to manually start system if auto failure occurs - 5E-3 (expected; well-trained).
- Operator fails to initiate shell-side water pump and/or open shell-side water valve - 5E-3 (expected; well-trained).

ADS [3,7,8,34,56]:

- High temperature (~300°F) will fail valves.
- Operator fails to actuate - 5E-3 (expected but some reluctance).
- Operator inadvertently actuates - ε.

Manual FWCI [24,47,52,56]:

- Operator fails to initiate manual FWCI in time - 0.05 (somewhat expected but also unusual practice).

Common modes (between systems and trains of a system) [3-14]:

- Primary reason assessed as auto signal failure. Operator fails to start a system - 5E-4.

SVs [29,34,46,69]:

- Fail open probability (initial demands):
  - 3 stage - 1.6E-2
  - 2 stage - 8E-3
  - Dresser - 4E-3
  - Crosby/Dikkers - 2E-3
- Fail-open probability (subsequent demands): 0.1 x value above.
- Demands:
  - Isolation condenser plant - 1
  - Newer BWRs - 5 initial demands and 5 subsequent demands before injection starts.

RCS isolation failure [3-14,56]:

- Common signal failure - 1E-3
- Failure to close unisolated lines (like PWR).

RCS pump seal related data [34,56]:

- Pump isolation valves on offsite power.
- High temperature (~300°F) fails valves while open.
- Operator fails to detect leak and initiate isolation once the power is restored - 1E-2.

Key AC system inputs (based on input from ORNL):

Offsite power loss - .092 (local) + .026 (area-wide)

DG common mode - 5.4E-5+5.2E-4 (air-cooled)
(hardware and 1.4E-4+5.2E-4 (water-cooled)
human error)

DG-hardware/T&M - 2.5E-2/6.0E-3

DC single bus failure - 1.0E-4
(battery unavailable)

DC common mode - 1.0E-5
(batteries unavailable)

Non-recovery of AC components (see below)

Time (hrs)	1/2	1	2	4	6	8	12
Offsite	.68	.45	.35	.21	.18	.12	.098
DG common mode	.95	.91	.82	.67	.55	.45	.30
DG-hardware	.96	.93	.87	.76	.67	.60	.49
DG-T&M	.97	.95	.91	.82	.74	.66	.55
DC single bus failure	.78	.61	.37	.14	.05	.01	.002
DC common mode	.97	.96	.88	.77	.67	.59	.45
SW (CCW) - T&M	.93	.87	.75	.57	.42	.32	.19

For those items found to be important to the dominant accident sequences (see Section 5 of the main report), the following categories of range factors* were used for the Monte Carlo uncertainty runs discussed in Section 4.3 of the main report.

All AC components and associated systems: as indicated in ORNL report[1]

Offsite power loss and nonrecovery: 3

All values assigned as 0.5: 2

Pressure drop failures of HPCI/RCIC: 3

Single train system hardware failures: 3 or 5

Common mode system hardware failures: 10 or 20

*Factor which is used to multiply and divide the median probability value in order to get the upper and lower range for that value.

Valve & single component hardware/T&M failures (e.g., stuck-open valve, fire pump failures): 10

Human actions (other than those assigned as 0.5): 10

RCIC - T&M: 5

HPCS - T&M: 3

Other system T&M: 10 or 20

Switchover failures to hot suppression pool: 10

APPENDIX F

Comparisons with Proposed Safety Goals and Past PRAs

Tables

Table		Page
F-1	Summary of Past PRA Information	241
F-2	Comparison of Sequence Estimates Between PRAs and This Study	244
F-3	Comparison of Core Damage Probability Per Year Due to Station Blackout for "Base" Plant Configuration with Proposed Safety Goals	245

INTRODUCTION

This appendix contains a brief comparison of the generic base plant results of this study with the results of most of the past published PRAs regarding station blackout. In addition, a comparison is made between the generic results and the proposed safety goal[73] regarding core damage probability. Although both qualitative and quantitative comparisons are made, the quantitative comparisons should not be strictly interpreted since it must be recognized that differing methodologies, data, and design and operational features do exist between the plants indicated and the analyses of this report.

Table F-1 is a summary of information regarding station blackout accident sequences from those PRA studies specifically reviewed[3-10]. A number of observations can be made when one compares these assessments with the generic results of this study.

1) For the PWR, all of the studies shown conclude that the TML_1B_1 sequence dominates the station blackout related core damage sequences. However, it should be noted that these studies apparently did not include or only superficially include those core damage sequences resulting from failures in the 2-12 hour or greater time frames.

   For the BWR, the Peach Bottom and Grand Gulf studies identified two types of sequences (TMU_1B_1 & TMB_3) as the dominant station blackout related core damage sequences. Again, it should be noted that these two studies apparently did not review in detail the core damage scenarios resulting from failures in the 2-12 hour time frame. The Limerick study did review the effects of failures in all three time periods depicted in the event trees for this program. The results of the Limerick PRA indicate that failures in the 2-12 hour time frame, dominate the station blackout related core damage sequences (TMU_2B_2) for BWRs.

   In comparison, the results of this study indicate that the later (2-12 hour time frame) system failures involving a prolonged station blackout can be just as important, if not more important, than the early system failure sequences for both reactor types. It should be noted that PRAs presently ongoing (such as the IREP studies) are the attempting to analyze the later system failures of concern.

2) Based on the past PRAs, the higher risk blackout sequences appear to involve containment failure primarily by overpressure or hydrogen burn in both reactor types with such sequences typically placed in Reactor Safety Study[3] equivalent release categories 2 and 3.

TABLE F-1. SUMMARY OF PAST PRA INFORMATION

Study	Plant	Dominant Blackout Sequences in Study(2)	Corresponding Blackout Sequence in This Study(3)	Containment Failure Mode & Release Category(4)	Approximate Probability	Approximate Probabilities of All Dominant Sequences(5)	←-----STATION BLACKOUT-----→ Approximate Percentage of Total Core Damage Probability(6)	Approximate Percentage of Total Risk(7)
IREP	Crystal River-3	$T_{2A}T_{10}$	TML_1B_1	δ -2 ε -6	$3x10^{-5}$ $3x10^{-5}$	$4x10^{-4}/2x10^{-4}$	15%	15%
RSS	Surry	TMLB'	TML_1B_1	α -1 γ -2 δ -2 ε -6	$3x10^{-8}$ $7x10^{-7}$ $2x10^{-6}$ $6x10^{-7}$	$5x10^{-5}/1x10^{-5}$	15%	30%
		TML(partial)	TML_1B_1	α -3 ε -7	$5x10^{-8}$ $5x10^{-6}$			
RSSMAP	Sequoyah(1)	$T_1B_3MLB'_{13}$	TML_1B_1	γ -2} δ -3}	$4x10^{-7}$	$6x10^{-5}/4x10^{-5}$	<1%	1%
RSSMAP	Oconee	$T_1(B_3)MLU$	TML_1B_1	γ -3 -7	$1x10^{-6}$ $1x10^{-6}$	$8x10^{-5}/4x10^{-5}$	3%	3%
Industry	Zion	11bTE	TML_1B_1	δ -2R	$2x10^{-7}$	$4.5x10^{-5}/6x10^{-6}$	<1%	3%
RSS	Peach Bottom-2,3	TW(partial)	TMB_3	α -1 γ'-2 γ -3	negligible $4x10^{-8}$ $2x10^{-7}$	$2.5x10^{-5}/2.5x10^{-5}$	1%	1%
		TQUV(partial)	TMU_1B_1	α -1 γ'-2 γ -3	negligible $1x10^{-8}$ $3x10^{-8}$			
RSSMAP	Grand Gulf	T_1PQI(partial)	TMQ_1B_3	α -1 δ -2	negligible $1x10^{-7}$	$3.5x10^{-5}/3.5x10^{-5}$	3%	3%
		T_1QW(partial) T_1QUV(partial)	TMB_3 TMU_1B_1	δ -2 γ -3 δ -4	$1x10^{-6}$ $5x10^{-8}$ $5x10^{-8}$			
Industry	Limerick	T_gUV	TMU_2B_2	(8)	$2x10^{-6}$ (high risk) $2x10^{-6}$ (low risk)	$1.5x10^{-5}/7.5x10^{-6}$	25%	25%
Industry	Big Rock Point	PQEFC, PQEFL, PQIFC, PQIFL	TMU_1B_1	β -3 Others	$1x10^{-6}$ $3x10^{-6}$	$1x10^{-3}/4x10^{-4}$	<1%	<1%

Notes are given on following page.

Table F-1 (Cont'd)

Notes:

(1) Study did not examine AC system in detail.

(2) Station blackout sequences identified in the study. "Partial" indicates that only part of the total sequence probability is station blackout. That part which is blackout is shown in the 6th column of the table.

(3) Column 4 shows the sequence nomenclature for the sequences identified in these PRAs in the corresponding notation used in this study. Our sequences and nomenclature can be found in Figures 1, 2, and 3 of the main report and are discussed in detail in Appendix A.

(4) The containment failure mode-release category are shown respectively. Refer to individual studies for more information. Abbreviations include:
α - steam explosion
β - leakage (failure to isolate)
δ - overpressure (PWR)
γ - hydrogen burn (PWR); overpressure (BWR)
γ' - overpressure (direct release-BWR)
ε - basemat melt-through
- Grand Gulf study uses (PWR) symbology

(5) Total core damage probability for all sequences in all core damage release categories/total core damage probability for all sequences in only the first three release categories. (See note 6.)

(6) Σ of all blackout sequence probabilities ÷ total core damage probability for all release categories.

(7) As a first-order approximation, nearly all the risk from accident sequences is estimated to result from only the first three release categories with nearly equal value from each category. Thus, the blackout contribution to risk is approximated by of all blackout sequence probabilities in first three release categories ÷ total core damage probability for all sequences in first three release categories.

(8) Refer to the Limerick PRA[8] for the containment failure modes identified in study. Release categories were not specifically assigned. Values shown in Columns 6&7 of the table are based on the estimate that steam explosions, hydrogen burn, drywell failure, and overpressure (no leakage) involve high-risk sequences while other containment failure modes involve low-risk sequences.

Current engineering judgment would suggest that these two failure modes are indeed the most likely containment failure modes in a station blackout. This is true even though more is now known regarding possible specific failure scenarios and timing of the failures. (See Section 5.2 in the main text.)

3) Table F-2 compares the results of the past PRAs with the results from this study. These results are modified only for the AC system configuration. Again, direct comparisons should not and cannot be made between the plant since adjustments for other system/operational features have not been considered; the values shown do approximate our own estimates of the various sequence probabilities for the plants identified. Comparisons are made for only those sequences identified in each PRA since other sequences for other time periods were not necessarily covered by the PRAs.

Table F-3 compares the results of this study (using the "base" plant configuration) with the proposed safety goal values. Shown are the point estimate and median values for the total core damage probability due to station blackout as compared to the safety goal. It should be noted that other plant configurations do exist which differ from the generic "base" plant configurations. Most all other plant configurations should be better (lesser core damage probabilities) than those whose results are displayed in Table F-3 with the possible exception of plants requiring two out of three diesels to start. In all other ways, designs most susceptible to failure under station blackout were generally used to establish the characteristics of each "base" plant configuration. Therefore, most specific plant results should compare favorably with the generic "base" plant configuration results displayed here or should have a lesser core damage probability than that shown.

Table F-2. Comparison of Sequence Estimate Between PRAs and The Base Case Used in This Study

Sequence*	PRA Plant	Sequence Estimate** Using This Study	Sequence Estimate in PRA	Comments
TML_1B_1	Crystal River-3	5E-6	5.5E-5	a) PRA LOP and DC values considerably higher b) PRA gave no credit for AFWS operation w/o DC
TML_1B_1	Surry	8E-6	9E-5	PRA used high DG common mode (10^{-2})
TML_1B_1	Sequoyah	4E-6	4E-7	Detailed analysis not done in PRA
TML_1B_1	Oconee	Can't be compared because hydros are used instead of diesels		
TML_1B_1	Zion	1E-6	2E-7	LOP and non-recovery of LOP lower in PRA
TMB_3	Peach Bottom	$\lesssim$1E-7	2.5E-7	
TMU_1B_1	Peach Bottom	7E-7	<1E-7	No DC common mode in PRA
TMQ_1B_3	Grand Gulf	$\lesssim$1E-7	1E-7	
TMB_3	Grand Gulf	$\lesssim$1E-7	1E-6	This report gives credit for extra-ordinary power recovery beyond 24 hours
TMU_1B_1	Grand Gulf	5E-7	1E-7	
TMU_2B_2	Limerick	1.5E-6	4E-6	
TMU_1B_1	Big Rock Point	Not compared; plant has unique features.		

*Sequence identified using nomenclature of this report. To get corresponding sequence identifier used in original PRA, refer to Table F-1.

**Onsite system values adjusted for diesel configuration and success criteria as well as for other sources of power recovery (peaking units, etc.). If specific plant was reviewed by ORNL, plant values for the onsite AC system were used, otherwise generic values were used.

Table F-3. Comparison of Core Damage Probability Per Year Due to Station Blackout for "Base" Plant Configurations With Proposed Safety Goals

"Base" Plant Configuration	Pt. Estimate (Internal Events)	Median Value (Internal Events)	External Events	Safety Goal (All Internal Accident Sequences and External Events)
PWR B&W	3.5E-5	6.6E-5	1E-4-1E-6 or lower*	1E-4
PWR W/CE	2.5E-5	3.9E-5	↓	↓
BWR #1A/1B	2.5E-5	5.4E-5	↓	↓
BWR #2	2.5E-5	5.3E-5	↓	↓
BWR #3	1.5E-6	3.5E-6	↓	↓

*Depends on plant age, design, and plant susceptability to seismic, fire, and other events.

APPENDIX G

Discussion on RCS Pump Seal Failure During Station Blackout

The issue of reactor coolant system pump seal failure is of particular interest in station blackout scenarios. In addition, the results of this study show that for some plant designs, the importance of station blackout accident sequences may depend, in part, on the pump seal question. This appendix serves to summarize much of the pump seal rupture-related information as applicable to the station blackout issue.

Because of a total loss of AC power during station blackout, pump seal cooling to the reactor coolant pumps in PWRs and to the primary system recirculation pumps in BWRs is also lost. Analyses suggest that this loss of pump seal cooling, if sufficiently long, can cause significant pump seal degradation such that primary coolant leakage past the degraded pump seals creates a "small LOCA." Particularly for those plant designs requiring AC power for RCS makeup to offset this loss of primary coolant, station blackout could result in a small LOCA condition with an inability to provide makeup.

Pump seal failures have recently been recognized as a potentially significant portion of the small LOCA probability. References 38 and 70 summarize much of the NRC work on pump seal failure and References 38 and 72 called for work in this area to be addressed in the resolution of the station blackout issue. In addition, NUREG-0737[37] required utilities to assess the effects of pump seal failures.

This study has investigated one aspect of the pump seal failure concern: station blackout-induced pump seal failure due to loss of seal cooling. It does not address, specifically, pump seal failure as an initiating event or due to other failure modes related to such reasons as mechanical failure, wear, or poor maintenance.

Pump seal designs differ somewhat but probably not significantly with regard to the loss of seal cooling. Bingham, Byron Jackson, and Westinghouse currently supply the RCS pumps used in nuclear power plants in the United States. Bingham and Byron Jackson use hydrodynamic (mechanical) seals while Westinghouse uses hydrodynamic and hydrostatic seals. The number of seal stages usually ranges from 2 to 3 with the gap between the hydrostatic seals larger than the hydrodynamic.

From the information available for review in this study[10, 38-42,63,69,70]* there is general agreement that the high primary coolant temperatures and pressures, as would exist in station blackout, could induce seal degradation. This seal degradation could begin in ~1/4 hour or less when the seals reach 250°F-300°F after the loss of seal cooling with a non-rotating pump. The degradation could continue to worsen to some unknown limit as time

*The authors understand there are also a number of private industry communications on this subject.

goes on. The bottom line concerning this limit reported in the references consists of:

1) Little leakage ranging from ~1 gpm to ~20 gpm per pump.

2) A maximum of ~70 gpm per pump in BWRs if seal cooling loss could eventually result in such warping, cracking, and breaking away of seal pieces that the seal is virtually lost.

3) A maximum of ~300 gpm per pump (reference concerned Westinghouse pumps), if it is possible to virtually lose the seals due to a minor steam spike within the seal cavity.

In all cases, this worst-case limit is expected to be reached within ~1-2 hours (or even less in case "3") following the loss of seal cooling.

Limited experience and/or testing is available to shed more light on this limit. References 38 and 41 discuss a pump seal test with a "non-degraded" seal on a Byron Jackson pump under primary system pressure and temperature conditions. In that test, seal leakage did not increase beyond ~1 gpm even after 56 hours. On a Bingham BWR pump test in 1973, loss of seal cooling for 5 hours resulted in a maximum leakage rate under 5 gpm. Another test of a Bryon Jackson Pump in 1978 for 30 minutes resulted in a leak rate of 2-3 gpm[69]. Actual operating experience is oftentimes unclear as to whether seal damage has occurred due to high temperatures in the seal cavities or for other reasons[70].

The above limited experience would suggest that an upper bound limit of ~20 gpm per pump is reasonable. While this may be, the authors of this study feel that the importance of the seal problem during a station blackout as well as being a potential small LOCA initiator, suggests that more work may be warranted in this area. In the main text of this report, the effects of the loss of seal cooling on the station blackout core damage probabilities are treated as a sensitivity.

APPENDIX H

Human Error Rate Discussion

Appendix H

I. Introduction

In this appendix we list important human actions,* probability values, error factors for these probability values, and a short discussion of the reasoning used to derive these values,**

II PWR Human Actions

Human Action	Value Used	Rationale
	Median (error factor)	
Operator fails to locally manually run AFW steam turbine with no power	0.5 (2)	- Action is difficult and requires unusual operator actions - High temperature in pump room may hinder operator -Some turbines with mechanical governors will continue to run with no DC power - Some turbines with electro-mechanical governors may fail on overspeed trip and not be recoverable
Operator fails to isolate RCS by closing one AC valve (local manual operation)	.5 hr.-0.5(2) 1 hr. - 0.25(2)	- Plants may not have station blackout procedures - Plants with AC valves may or may not have valve closure in procedures - Time period is fairly short and in a high stress situation

*These human actions include recovery actions concerning AC/DC and service water components which come from experience reported in the ORNL report [1].
**The values used come from Appendix E.

Human Action	Value Used	Rationale
Operator fails to manually actuate HPI given AC is restored	1E-3 (10)	- Operator has had a long time, about 5 hours, to consider actions necessary on recovery of AC power - Simple operation done in the control room

III. BWR Human Actions

BWRs With Isolation Condensers (Base Configurations 1A and 1B)

Human Action	Value Used	Rationale
	Median (error factor)	
Operator fails to initiate isolation condenser shell side water and/or local manually operate AC shell side valves	5E-3/Demand (10)	- Equipment available outside containment - Has 1.5-2 hours to perform action - Plant procedures reviewed typically show this as an anticipated step for loss of all AC conditions - Table 20-25 of Swain [56] next to last entry-"1E-2" but this is not a high stress situation so more credit was given. (See pages 20-35)

BWRs with HPCI-RCIC (Base Configuration 2)

Human Action	Value Used	Rationale
	Median (error factor)	
Operator fails to local manually operate HPCI or RCIC in 0.5 hours with all DC failed	1.0	- Short time available and must leave control room

		- Actions involve removing some equipment covers and jacking throttle valve (some difficulty)
Operator fails to local manually operate HPCI or RCIC after battery depletion in five hours	0.5(2)	- Some difficulty as referred to above - Adverse environment in pump rooms (150° F or higher) - Reluctance to enter area when all core injection is potentially lost and all power is lost
Operator does not override high temperature isolation signal on HPCI/ RCIC which stops pump operation in 5 hours (implied by assuming isolation takes place in analysis)	1.0	- Have not seen addressed in procedures - Looked at as a sensitivity
Operator allows for primary pressure to drop HPCI/RCIC isolation in 5 hours occurs with probability shown	HPCI-0.1(3) RCIC-0.05(3)	- Depressurization may be an advantageous procedure based on SASA results - Engineering judgment on operator failure to keep pressure above setpoints

<u>BWRs with HPCS-RCIC (Base Configuration 3)</u>

Same actions, values, and rationale for RCIC as applied to Base Configuration 2.

Note: For all BWR plants, no other human actions (even if underestimated by factors of 10-50) cause other cutsets to become appreciably important (so these are no-never-minds).

APPENDIX I

List of Basic Assumptions Used in This Analysis

Appendix I

In this appendix is a list of general, PWR, and BWR specific assumptions used in performing this analysis. These assumptions should be verified for the particular plant of interest, or alternate characteristics (if they exist) should be reviewed for their effect on the analyses herein.

A. General Assumptions

- Station Blackout environmental conditions are judged not to be worse than LOCA conditions. Equipment is assumed qualified for such conditions.

- Sufficient natural circulation can be obtained in battery rooms, switchgear rooms, control room, and logic cabinet areas so as to avoid equipment failure by overheating without AC ventilation.

- AC equipment and associated logic is expected to perform satisfactorily once AC power is recovered. At least one event has occurred where offsite power was not immediately, but instead the offsite grid suffered slow degradation and quick resurgence of voltage before offsite power was finally lost entirely. This caused fuses to blow in a number of control system circuits which later had to be replaced. Such an occurrence would prevent the affected AC dependent systems from restarting once AC power was restored. Though such a scenario was not quantitatively analyzed in the analyses discussed in this report, the importance of being aware of such a possibility cannot be overstressed.

- The evidence is that only one train of heat removal/RCS makeup is required for station blackout even up to small LOCA conditions.

- All necessary support system trains are on the same division as the heat removal/makeup system (e.g., Division A service water serves Division A heat removal systems). Otherwise, additional diesels may be needed.

- System function adequacy is assumed, e.g., if a system is designed to provide sufficient water makeup for a stuck-open relief valve, the system is assumed to be able to provide such makeup.

- AC power restoration is assured beyond 24 hours. (This time period allows for extraordinary actions.) Credit for extraordinary actions before 24 hours was not included in this analysis.

- At least two valves are used on RCS lines for isolation; otherwise, failure to isolate would be more important.

- DC lighting will last as long as station DC power for equipment operation, and lighting is sufficient to obtain access throughout control building and vital system areas.

- DC powered-instrumentation (even just one division) is sufficient (without any AC power) to provide the operator with plant status and system controls necessary to safely shutdown the plant (as long as the DC power lasts).

- It is possible that the plant security systems could hamper recovery efforts in a station blackout accident. In some cases, it may be impossible to open doors. In others, people could be delayed to the point where their recovery acions would be meaningless. Because of the highly sensitive nature of this subject, it is difficult to get any information. To the best of our knowledge, however, most systems are DC or vital AC and it appears can be operated even without power.

  An analysis of security systems is not attempted in this study, but it would appear that utilities should determine if failure of electrical power could render their security systems inoperable in such a way that recovery actions would be extremely difficult if not impossible. This is particularly important in the station blackout case.

- Loss of power (AC and/or DC) will not significantly affect communications among plant personnel who can use portable self-powered devices.

- As a result of the larger amount of radioactive material being stored on site, the contribution of spent fuel pools to nuclear accidents may require another look.

  During a station blackout event, the spent fuel pool would be heating up over a period of several hours and would start to boil off. This boiloff would result in the melting and release of radioactive material. This event appears to occur in the 1/2 - 1 day time frame depending on the size of the pool and amount of fuel stored. Another failure mode which has been mentioned is the failure of the floor slab as the temperature increases resulting in a leak which drains the pool faster[62]. This failure would probably not occur until after the pool reaches 212°F.

  Due to the relatively low fission product inventory (as compared to the core) and the timing of fuel pool boiling, spent fuel pools are not analyzed in this study. However, this could be an additional long-term problem which would also require operator attention.

- In any accident where primary or secondary cooling has failed and then has been restored, there is the potential problem of thermal shock resulting in excessive stress and subsequent

failure of the reactor vessel, primary or secondary piping, steam generator tubes, or the steam generator shell. This problem is currently being studied elsewhere.

- In the station blackout sequences where cooling fails (either initially or later), the possibility of recovering AC power and then successfully cooling the core must be considered. In this study, it was concluded that upon recovery of AC power before core uncovery, most likely cooling could be restored. It has been assumed that if this is done before core damage results (using the times given by SASA[31,34] then the core can be saved and the accident brought to a successful conclusion. We have, therefore, assumed that any resulting thermal shock will <u>not</u> result in failure of such a magnitude as to cause core damage.

- The use of turbine runback has not been considered because of the high unreliability under total loss of load. Turbine runback would affect all sequences by changing the initiating event probability by a factor equal to the unreliability of the turbine runback itself.

- One of the unresolved phenomenological questions is: "When is the core damaged to such an extent that recovery is impossible?" Our conservative assumption in this study is that recovery is possible only up to the time that we can prevent core uncovery. However, some of the more recent PRAs are trying to determine the time at which the core becomes uncoolable; this may involve considerable partial melting of the core. The difference in time (perhaps 1/2 - 3 hours) does not appear to be long enough to change the recovery probabilities significantly. As a result, the conservative times to core uncovery generated by the SASA [32-34[program are used. It should be noted that late recovery actions could cause steam generator or isolation-condenser tube failures, or the reactor vessel thermal shock problem that is currently being studied.

B. PWR Assumptions

- The SASA[31-34] runs done for this program and information from the Loft program [71] and the TMI-2 incident indicates (a) two-phase flow is usually initiated before core uncovery occurs in sequences where cooling has failed; and (b) that on recovery of secondary cooling or primary system makeup before a certain time, it is possible to cool the core using two-phase flow, to prevent core uncovery, and to recover from the two-phase flow region.

- The phenomenology of two-phase flow is still uncertain at this time and potentially conservative values for the last

time at which secondary cooling or makeup can be successfully initiated given in the SASA[31-34] reports are used in this program.

- For plants with high pressure injection pumps with shutoff heads less than the PORV setpoints either secondary cooling or operation of at least two PORVs is assumed necessary to reduce the pressure sufficiently for high pressure injection to provide makeup water.

- AFW steam turbine pumps are assumed qualified to run without AC ventilation. Due to natural ventilation obtained by opening of the pump room doors, the temperature in the long term will not go above the equipment qualification temperature.

C. BWR Assumptions

- BWR isolation condenser designs. Shell side water supply to condenser is virtually limitless (24 hours or longer) and is supplied by a fire pump that does not require station AC.

- Plant AC power loss has no effect on the operation of the fire pump for isolation condenser shell side water, since the fire pump can be controlled locally. (It has its own power sources.)

- BWRs with HPCI and/or RCIC. These pump rooms will eventually heat up to beyond design basis conditions under extended blackout.

- BWRS with HPCI and/or RCIC. Current research is looking into the effects of chugging once the suppression pool reaches 200°F which could cause containment failure in the order of 8-12 hours. However, since best estimates are that this will not occur, we will assume that the containment will not fail until about 48 hours for the applicable sequences. [74]

APPENDIX J

External Events

INTRODUCTION

In this appendix, we will discuss the effect of external events on the station blackout issue.

SEISMIC EVENTS

It appears that many seismic events which potentially result in core damage could manifest themselves as a station blackout. Based on generic data[57] and PRAs[9,10,63], the seismic contribution to core damage has been estimated as $\leq$ 5E-6/RYR although perhaps as high as 1E-4/RYR at older plants.

In addition to inducing a loss of offsite power, two areas of the plant appear to be susceptible to seismic events. The first is the diesel generator building. Collapse of this building or other nearby structures could result in severe damage to AC generating equipment. The second is the control room building. Collapse of this building could result in the death of all the operators or the loss of all control functions.

The specialized analyses and large scope of work which would be required to adequately model, on a generic level, the seismic event and then make recommendations to possibly reduce the core damage probability would be a major effort far beyond the scope of this study. In any event, any "changes" would have to be seismic ones and not necessarily AC power-related.

FIRE [57-61,63]

While fire appears to be a potential, significant, initiating event leading to core damage, most analyses point to damage to instrumentation and control functions as the dominant cause of loss of shutdown capability. These fires would most likely occur in switchgear rooms, cable-spreading rooms, or the control room. None of these fires necessarily lead to a station blackout.

The probability of one fire causing a station blackout depends upon all the power cables for both offsite and diesel generators, or the loads, passing through the same or nearby rooms and the likelihood of a fire of sufficient size to destroy a sufficiently large set of these cables. For most plants, the cables are dispersed and would require multiple independent fires for which the probability is considered to be <1E-6. However, there are some plants for which it appears that one fire could cause a loss of all AC power because these plants do not have their cables dispersed and the fire initiated core damage due to the resulting station blackout could be of the order of 1E-4/RYR. This result would be highly plant specific.

The obvious solution is to disperse power and control functions to several rooms so that multiple independent fires would be required to cause damage. As a result of the Browns Ferry fire, recommendations such as dispersing and, if that's not possible, using fire walls to

isolate redundant trains have been made and the general feeling is that fires which could knock out all electrical power are much less likely to occur under the new regulations.

WEATHER-INDUCED BLACKOUT [10,63]

In addition to severe weather inducing a loss of offsite power, it may also be possible to cause a concurrent loss of onsite power resulting in station blackout. The mechanism for the loss of onsite power could be the failure of the diesel generator building or other nearby structures due to high winds generated in hurricanes or tornados. This would be particularly difficult to recover from due to the possible severe damage to the AC generating equipment.

In the referenced PRAs which have attempted to cover such phenomena, the frequency of core melt ranges from 5E-5 - <1E-8. The upper bound arises in an older plant where the diesel generator building and other buildings have been shown to have a considerable failure probability for wind speeds in excess of 150 mph. Again, as with the seismic event, this is not really an AC-system design problem and "changes" would not necessarily be AC power-related.

SUMMARY

In summary, we can see that a plant's susceptibility to external events depends critically on plant siting and design. Below is a table of possible plant weaknesses for the important external effects.

Event	Plant "Weaknesses"
Seismic	Switchyard, control, non-seismically qualified equipment
Fire	Areas with multiple divisions
Wind	Grid towers, switchyard, tall structures

The core damage probability from all of the above can range from 1E-4 to less than 1E-6. Other events such as flood, volcanos, toxic gases, air crashes, etc. appear to be less likely.

GLOSSARY OF ABBREVIATIONS AND ACRONYMS

ADS	Automatic Depressurization System
AFW, AFWS	Auxiliary Feedwater System
APRS	Automatic Pressure Relief System
BWR	Boiling Water Reactor
B&W	Babcock & Wilcox
BIT	Boron Injection Tank
BWST	Borated Water Storage Tank
CCW	Component Cooling Water
CE	Combustion Engineering
CHRS	Containment Heat Removal System
CRD, CRDS	Control Rod Drive System
CSIS	Containment Spray Injection System
CSRS	Containment Spray Recirculation System
CST	Condensate Storage Tank
CVCS	Chemical and Volume Control System
EFWS	Emergency Feedwater System
FSAR	Final Safety Analysis Report
FWCI	Feedwater Coolant Injection System
GE	General Electric
HPCI	High Pressure Coolant Injection
HPCS	High Pressure Core Spray
HPI, HPIS	High Pressure Injection System
ICS	Integrated Control System
IREP	Interim Reliability Evaluation Program
LER	Licensee Event Report

LOCA	Loss of Coolant Accident
LPCI	Low Pressure Coolant Injection
LPCRS	Low Pressure Coolant Recirculation System
LPCS	Low Pressure Core Spray
LPI, LPIS	Low Pressure Injection System
MFW, MFWS	Main Feedwater System
MSIV	Main Steam Isolation Valve
MOV	Motor Operated Valve
NRC	Nuclear Regulatory Commission
ORNL	Oak Ridge National Laboratory
PCS	Power Conversion System
PORV	Pilot Operated Relief Valve
PRA	Probabilistic Risk Assessment
PWR	Pressurized Water Reactor
RCIC	Reactor Core Isolation Cooling
RCS	Reactor Coolant System
RHR, RHRS	Residual Heat Removal System
RSS	Reactor Safety Study (WASH-1400)
RSSMAP	Reactor Safety Study Methodology Applications Program
RWST	Refueling Water Storage Tank
Rx	Reactor
SASA	Severe Accident Sequence Analysis Program
SDC, SDCS	Shutdown Cooling System
SNL	Sandia National Laboratories
SRV	Safety/Relief Valve
T&M	Test and Maintenance
TMI-2	Three Mile Island - Unit 2
VSS	Vapor Suppression System
W	Westinghouse

REFERENCES

(1) Reliability of Emergency AC Power Systems at Nuclear Power Plants, R. E. Battle and D. J. Campbell, NUREG/CR-2989, ORNL/TM-8545, to be published.

(2) U. S. Nuclear Regulatory Commission memorandum from Bernero and Mattson to Denton, "Approval of Task Action Plan A-44, Station Blackout," July 14, 1980.

(3) U. S. Nuclear Regulatory Commission, "Reactor Safety Study," NRC Report, WASH-1400, October 1975 (Surry and Peach Bottom).

(4) A. A. Garcia, et al., "Crystal River-3 Safety Study," Science Applications, Inc., NUREG/CR-2515, SAND81-7229, Vols. 1 and 2, March 1982.

(5) D. D. Carlson, et al., "Reactor Safety Study Methodology Applications Program: Sequoyah #1 PWR Power Plant," Sandia National Laboratories and Battelle Columbus Laboratories, NUREG/CR-1659/1 of 4, SAND80-1897/1 of 4, February 1981.

(6) G. J. Kolb, et al., "Reactor Safety Study Methodology Applications Program: Oconee #3 PWR Power Plant," Sandia National Laboratories and Battelle Columbus Laboratories, NUREG/CR-1659/2 of 4, SAND80-1897/2 of 4, Revision 1, May 1981.

(7) S. W. Hatch, et al., "Reactor Safety Study Methodology Applications Program: Grand Gulf #1 BWR Power Plant," Sandia National Laboratories and Battelle Columbus Laboratories, NUREG/CR-1659/4 of 4, SAND80-1897/4 of 4, October 1981.

(8) "Probabilistic Risk Assessment: Limerick Generating Station," Philadelphia Electric Co., Revision 1, August 1981.

(9) "Big Rock Point Plant PRA," Consumers Power Company, March 1981.

(10) "Zion Probabilistic Safety Study," Commonwealth Edison Co., Fall 1981.

(11) IREP Status Reports on Browns Ferry PRA, EG&G Idaho Inc.

(12) IREP Status Reports on ANO-1 PRA, Sandia National Laboratories and Science Applications, Inc. (Albuquerque, New Mexico).

(13) IREP Status Reports on Millstone-1 PRA, Science Applications, Inc. (Bethesda, MD).

(14) IREP Status Reports on Calvert Cliffs PRA, Science Applications, Inc. (Bethesda, MD).

(15) "Calvert Cliffs Nuclear Power Plant - Units 1 and 2 Final Safety Analysis Report," Baltimore Gas & Electric Co.

(16) "Crystal River Nuclear Generating Plant Unit 3 Final Safety Analysis Report," Florida Power Corporation.

(17) "Sequoyah Nuclear Plant Final Safety Analysis Report," Tennessee Valley Authority.

(18) "Zion Station Final Safety Analysis Report," Commonwealth Edison Co.

(19) "Indian Point Nuclear Generating Units 2 and 3 Final Safety Analysis Report," Consolidated Edison Co. of New York, Inc.

(20) "Limerick Generating Station Units 1 and 2 Final Safety Analysis Report," Philadelphia Electric Company.

(21) "Browns Ferry Nuclear Plant Units 1 and 2, and 3 Final Safety Analysis Report," Tennessee Valley Authority.

(22) "Millstone Nuclear Power Station - Unit 1 Final Safety Analysis Report," Connecticut Light and Power Co. and Hartford Electric Light Co.

(23) "Oyster Creek Nuclear Generating Station Final Safety Analysis Report," Jersey Central Power and Light Co.

(24) "Nine Mile Point - Unit 1 Final Safety Analysis Report," Niagara Mohawk Power Corp.

(25) "Dresden - Units 2 and 3 Final Safety Analysis Report," Commonwealth Edison Co.

(26) U. S. Nuclear Regulatory Commission, "Staff Report on Generic Assessment of Feedwater Transients in Pressurized Water Reactors designed by the Babcock & Wilcox Company," NUREG-0560, May 1979.

(27) U. S. Nuclear Regulatory Commission, "Generic Evaluation of Feedwater Transients and Small Break Loss-of-Coolant Accidents in Westinghouse-Designed Operating Plants," NUREG-0611, January 1980.

(28) U. S. Nuclear Regulatory Commission, "Generic Evaluation of Feedwater Transients and Small Break Loss-of-Coolant Accidents in Combustion Engineering-Designed Operating Plants," NUREG-0635, January 1980.

(29) U. S. Nuclear Regulatory Commission," Generic Evaluation of Feedwater Transients and Small Break Loss-of-Coolant Accidents in GE-Designed Operating Plants and Near-Term Operating License Applications," NUREG-0626, January 1980.

(30) W. W. Weaver, R. W. Dorman, R. S. Enzinna, "Auxiliary Feedwater Systems Reliability Analyses, "Babcock & Wilcox, BAW-1584, December 1979, and Plant Specific Analyses from Oconee, Rancho Seco-1, ANO-1, David Besse-1, TMI-1.

(31) C. D. Fletcher, "A Revised Summary of PWR Loss of Offsite Power Calculations," EG&G Idaho, Inc., EGG-CAAD5593, September 1981.

(32) F. E. Haskin, et al., "Analysis of a Hypothetical Core Meltdown Accident Initiated by Loss of Offsite Power for the Zion-1 PWR," Sandia National Laboratories, NUREG/CR-1988, SAND81-0503, November 1981.

(33) Presentation by D. D. Yue and W. A. Condon, "Analysis of Browns Ferry Complete Station Blackout Sequences," Oak Ridge National Laboratory, January 21, 1981.

(34) S. A. Hodge, et al., "Station Blackout at Browns Ferry Unit One - Accident Sequence Analysis," Oak Ridge National Laboratory, NUREG/CR-2182, ORNL/NUREG/TM-455, Volume 1, November 1981, and related letters from B. Saffel (EG&G) to R. Tiller (DOE), dated 11/3/81 & 1/15/82 and B. Saffel (EG&G) letter to J. Solecki (DOE) dated 4/8/82.

(35) P. W. Baranowsky, A. M. Kolaczkowski, M. A. Fedele, "A Probabilistic Safety Analysis of DC Power Supply Requirements for Nuclear Power Plants," U. S. Nuclear Regulatory Commission, Sandia National Laboratories, Evaluation Associates, Inc., NUREG-0666, April 1981.

(36) G. E. Apostolakis, J. Chun, "On the Probability of Loss of DC Power Following AC Failure in a Nuclear Power Plant," University of California at Los Angeles, UCLA-ENG-76112, December 1976.

(37) U. S. Nuclear Regulatory Commission, "Clarification of TMI Action Plan Requirements," NUREG-0737, November 1980.

(38) U. S. Nuclear Regulatory Commission memorandum from T. E. Murley to D. G. Eisenhut (Draft), "Reactor Coolant Pump Seal Failure," 1981 and references.

(39) Letter from D. C. Trimble (Arkansas Power & Light Co.) to R. W. Reide (NRC), "Small Break LOCA Information," May 23, 1980.

(40) Letter from W. O. Parker, Jr. (Duke Power Co.) to H. R. Denton (NRC), "Response to Request for Additional Information on Small Break LOCA," December 28, 1979.

(41) U. S. Nuclear Regulatory Commission memorandum from J. J. Zudans to Z. R. Rosztoczy, "St. Lucie-2, Reactor Coolant Pump Seal Hot Standby Test," September 19, 1980.

(42) Letter from D. B. Waters (BWR Owners Group) to D. G. Eisenhut (NRC), "BWR Owners' Group Evaluation of NUREG-0737 Item II. K. 3.25, Effect of Loss of Alternating Current Power on Pump Seals," BWROG-8142, May 22, 1981.

(43) "Report on Power-Operated Relief Valve Opening Probability and Justification for Present System and Setpoints," Babcock & Wilcox, Doc. #12-1122779, 1981.

(44) "PORV Failure Reduction Methods - Final Report," CE Power Systems, CEN-145, December 1980.

(45) "Probabilistic Analysis and Operational Data in Response to NUREG-0737 Item II.K.3.2 for Westinghouse NSS Plants," Westinghouse Electric Corp., WCAP-9804, February 1981.

(46) Letter from D. B. Waters (BWR Owners Group) to D. G. Eisenhut (NRC), "BWR Owners' Group Evaluations of NUREG-0737 Requirements II.K.3.16 and II.K.3.18," BWROG-8134, March 31, 1981.

(47) Various plant station blackout procedures in response to NRC generic letter 81-04 regarding "Emergency Procedures & Training for Station Blackout Events," February 25, 1981, (approximately 20 responses).

(48) "Station Blackout Analysis for St. Lucie Unit 2 - Appendix 15C-4," Florida Power and Light, enclosures to letter - date unknown.

(49) F. A. Heddleson, "Summary Report on a Survey of LWR Safety Systems," (PWR/BWR Plant Data Files), NUREG/CR-2069, ORNL/NSIC-181, October 1981.

(50) Plant Visits: Browns Ferry Units 1, 2, and 3 - March 24, 1981; Crystal River-3 - June 8-9, 1981; Millstone Units 1 and 2 - July 14, 1981; St. Lucie Unit 1 - March 3-4, 1982.

(51) Various plant technical specifications, procedures, and review of LERs.

(52) Various plant responses to items in NUREG-0737, "Clarification of TMI Action Plan Requirements," November 1980 (approximately 40 responses).

(53) W. H. Sullivan, J. P. Poloski, "Data Summaries of Licensee Event Reports of Pumps at U. S. Commercial Nuclear Power Plants," EG&G Idaho, Inc., NUREG/CR-1205, January 1980.

(54) W. H. Hubble, et al., "Data Summaries of Licensee Event Reports of Valves at U. S. Commercial Nuclear Power Plants," EG&G Idaho, Inc., NUREG/CR-1363, May 1980.

(55) Plant availability data from Nuclear Safety, January 1975 thru December 1980.

(56) A. D. Swain, H. E. Guttmann, "Handbook of Human Reliability Analysis with emphasis on Nuclear Power Plant Applications," Sandia National Laboratories, NUREG/CR-1278, October 1980.

(57) "PRA Procedures Guide," Office of Nuclear Regulatory Research, American Nuclear Society, Institute of Electrical and Electronics Engineers, NUREG/CR-2300, Review Draft, September 28, 1981.

(58) R. H. Gallucci, "A Methodology for Evaluating the Probability for Fire Loss of Nuclear Power Plant Safety Functions," PhD Thesis, Rensselear Polytechnic Institute, May 1980.

(59) A. G. Sideris, et al., "Nuclear Plant Fire Incident Data File," Nuclear Safety - Vol. 20, No. 3, May - June 1979.

(60) S. H. Hanauer, et al., "Recommendations Related to Browns Ferry Fire," U. S. Nuclear Regulatory Commission, NUREG-0550, February 1976.

(61) 10 CFR Part 50 - Fire Protection Program for Operating Nuclear Power Plants - Final Rule, Federal Register Vol. 45, No. 225, November 19, 1980.

(62) Letter from P. R. Clark (JCP&L) to H. R. Denton (NRC), "Oyster Creek Nuclear Generating Station Emergency Procedures and Training for Station Blackout Events," August 5, 1981.

(63) Indian Point Probabilistic Safety Study," Power Authority of the State of New York and Consolidated Edison Company of New York, Inc., Spring 1982.

(64) M. P. Sherman, et al., "The Behavior of Hydrogen During Accidents in Light Water Reactors," Sandia National Laboratories and Energy Inc., NUREG/CR-1561, SAND80-1495, August 1980.

(65) R. G. Spulak, Jr., "The Effect of Containment Failure Pressure on Risk," Sandia National Laboratories, SAND82-0822, July 1982.

(66) U. S. Nuclear Regulatory Commission, "Anticipated Transients Without Scram for Light Water Reactors," NUREG-0460, April 1978.

(67) R. B. Worrell and D. W. Stack, "A SETS User's Manual for the Fault Tree Analyst," NUREG/CR-0465, SAND77-2051, November 1978.

(68) M. D. Olman, "Quantitative Fault Tree Analysis Using the SET Evaluation program (SEP)," Draft (to be published).

(69) Letter from S. J. Stark (GE) to A. M. Kolaczkowski (SNL), "Responses to SNL Questions, dated 12/18/81," February 18, 1982.

(70) U. S. Nuclear Regulatory Commission memorandum from R. Riggs to E. Adensam, "Status on Reactor Coolant Pump Seal Degradation Review," December 9, 1980.

(71) LOFT Highlights, "Natural Circulation: Maintaining Secondary Heat Sink is Vital for Effective Core Cooling in a Very Small Break LOCA," EGG-LOFT-5664, April 1982.

(72) Memorandum from R. Fraley (ACRS) to W. Dirks (NRC), "256th ACRS Meeting Actions, Agreements, Assignments, and Requests," December 16, 1981.

(73) U. S. Nuclear Regulatory Commission memorandum from M. Ernst to S. Hanauer, et al., "Draft Safety Goal Implementation Plan," April 8, 1982.

(74) "Suppression Pool Temperature Limits for BWR Containments," T. M. Su, NUREG-0783, November 1981. "Safety Relief Valve Quencher Loads; Evaluation for BWR Mark 2 and 3 Containments,", T. M. Su, NUREG-0802, October 1982.

NRC FORM 335 (11-81)

U.S. NUCLEAR REGULATORY COMMISSION

BIBLIOGRAPHIC DATA SHEET

1. REPORT NUMBER (Assigned by DDC)
NUREG/CR-3226
SAND82-2450

4. TITLE AND SUBTITLE (Add Volume No., if appropriate)
Station Blackout Accident Analyses
(Part of NRC Task Action Plan A-44)

2. (Leave blank)

3. RECIPIENT'S ACCESSION NO.

7. AUTHOR(S)
Alan M. Kolaczkowski
Arthur C. Payne, Jr.

5. DATE REPORT COMPLETED
MONTH: April YEAR: 1983

9. PERFORMING ORGANIZATION NAME AND MAILING ADDRESS (Include Zip Code)
Nuclear Fuel Cycle System Safety
Division 9412
Sandia National Laboratory
Albuquerque, New Mexico 87185

DATE REPORT ISSUED
MONTH: May YEAR: 1983

6. (Leave blank)

8. (Leave blank)

12. SPONSORING ORGANIZATION NAME AND MAILING ADDRESS (Include Zip Code)
U. S. Nuclear Regulatory Commission
Division of Safety Technology and
Division of Risk Analysis
Washington, DC 20555

10. PROJECT/TASK/WORK UNIT NO.
USI A-44

11. FIN NO.
A-1302

13. TYPE OF REPORT
Technical (Final Report)

PERIOD COVERED (Inclusive dates)

15. SUPPLEMENTARY NOTES
None

14. (Leave blank)

16. ABSTRACT (200 words or less)

This report presents the results of the accident sequence analysis portion of Task Action Plan A-44, "Station Blackout." Along with a companion report by ORNL on onsite AC power systems, a technical basis for the resolution of Task A-44 is provided.

Probabilistic analysis techniques are used to define and quantify possible accident sequences and identify combinations of failure modes which lead to core melt.

For the dominant sequences, sensitivity analyses are done to show the effects on both individual sequence and total core melt frequency of changing various plant parameters. Many changes were found to be effective in reducing total core melt frequency.

17. KEY WORDS AND DOCUMENT ANALYSIS

17a. DESCRIPTORS

Station Blackout
USI A-44
Loss of AC power at nuclear power plants

17b. IDENTIFIERS/OPEN-ENDED TERMS

18. AVAILABILITY STATEMENT
Unlimited availability

19. SECURITY CLASS (This report)
Unclassified

20. SECURITY CLASS (This page)
Unclassified

21. NO. OF PAGES
280

22. PRICE
$

NRC FORM 335 (11-81)

UNITED STATES
NUCLEAR REGULATORY COMMISSION
WASHINGTON, D.C. 20555

OFFICIAL BUSINESS
PENALTY FOR PRIVATE USE, $300

FOURTH-CLASS MAIL
POSTAGE & FEES PAID
USNRC
WASH. D. C.
PERMIT No. G-67