Figure 3E.1-18—Section View Cut Through Critical Section

Figure 3E.1-19—Plan View Cut Through Critical Section

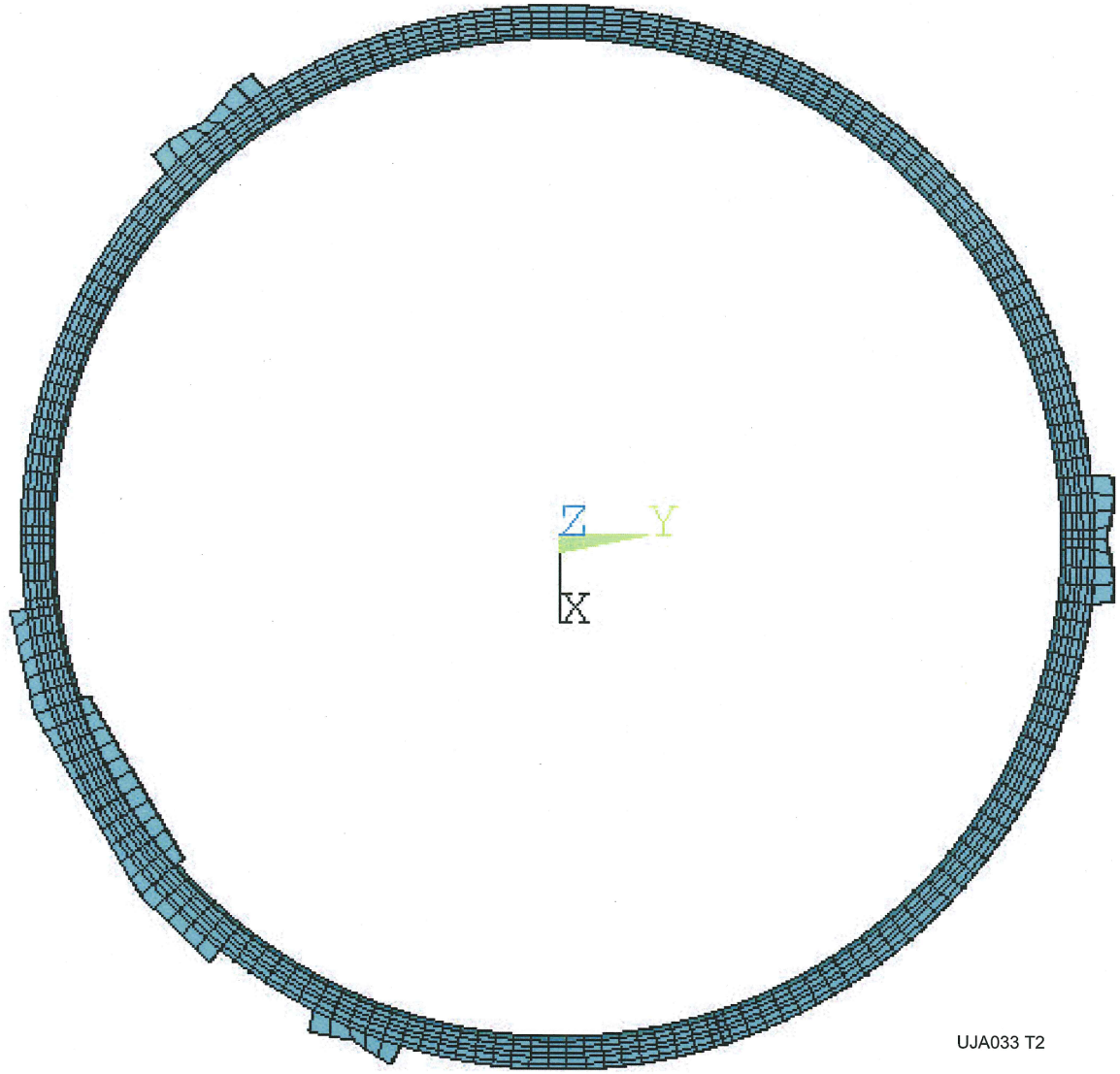

Figure 3E.1-20—Elevation View of Buttress 3

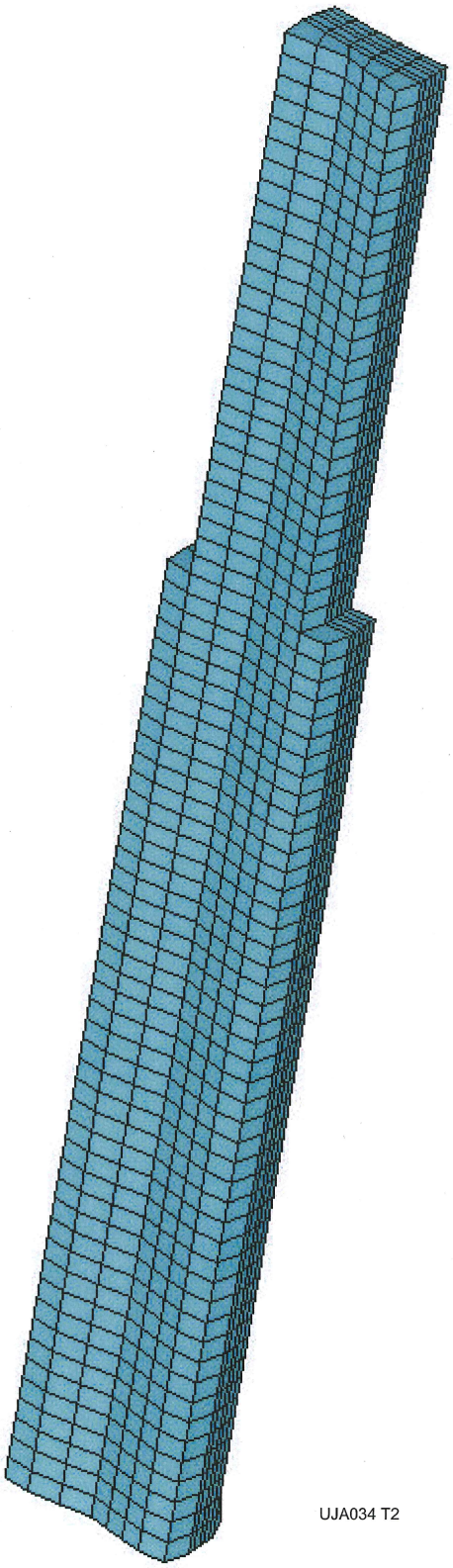

Figure 3E.1-21—Plan View Cut Through Typical Narrow Buttress

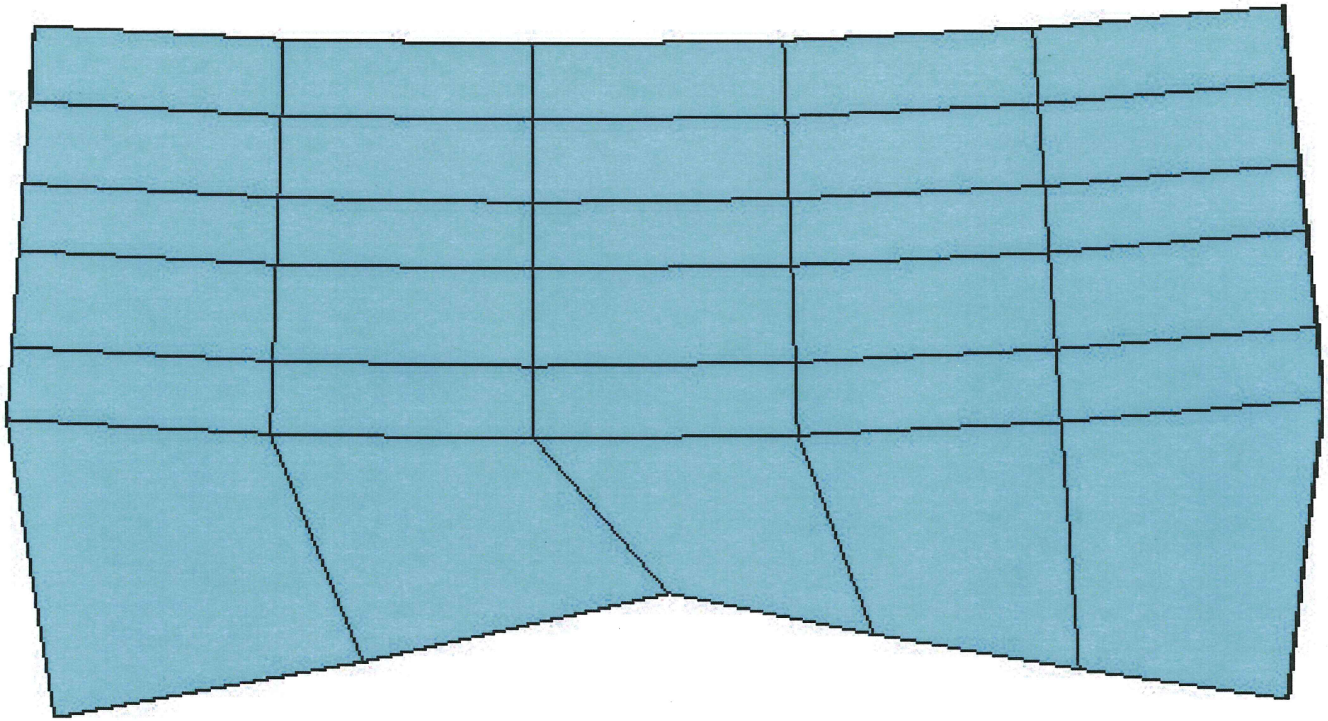

UJA035 T2

Figure 3E.1-22—Plan View Cut Through Typical Wide Buttress

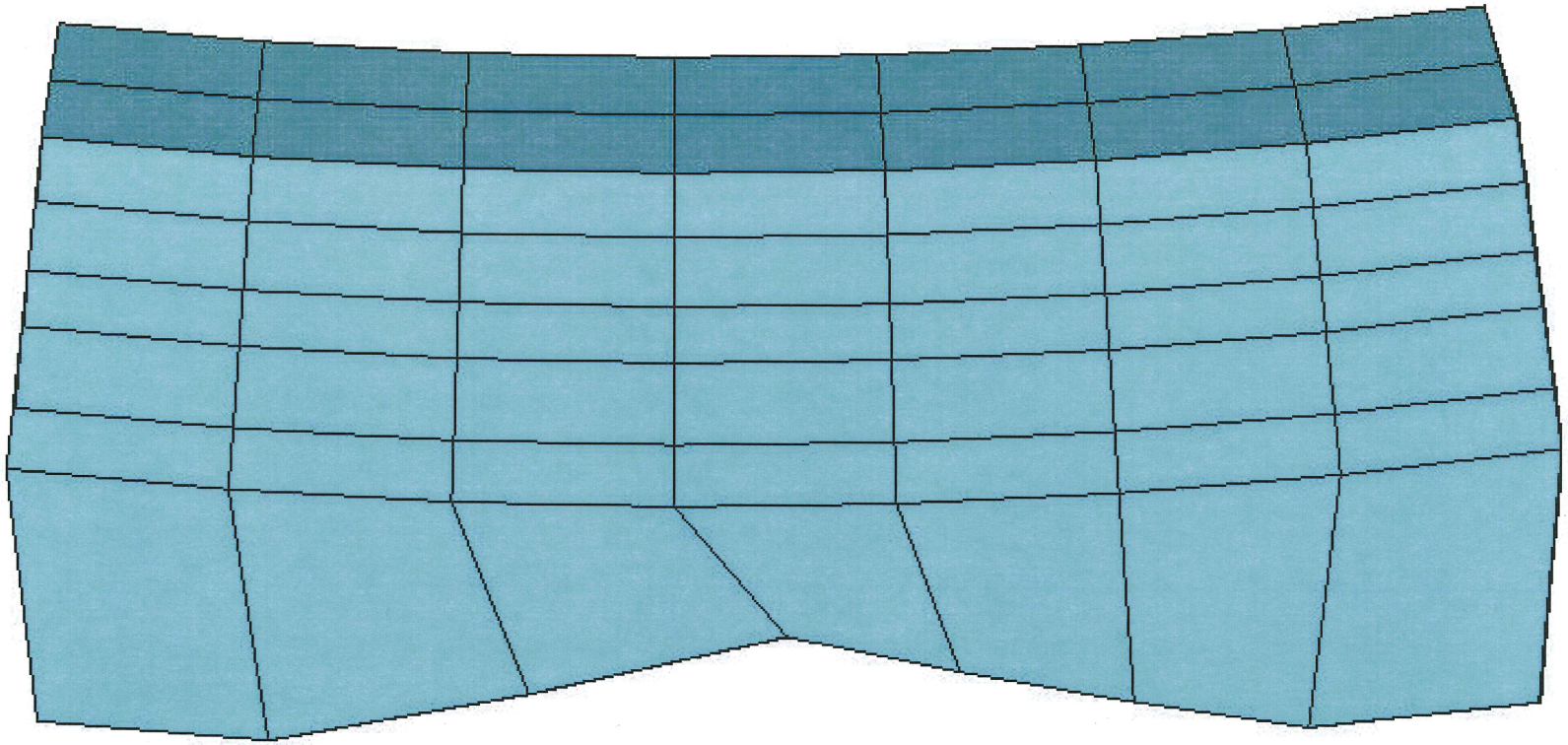

UJA036 T2

Figure 3E.1-23—Containment Wall Reinforcement (Typical Section)

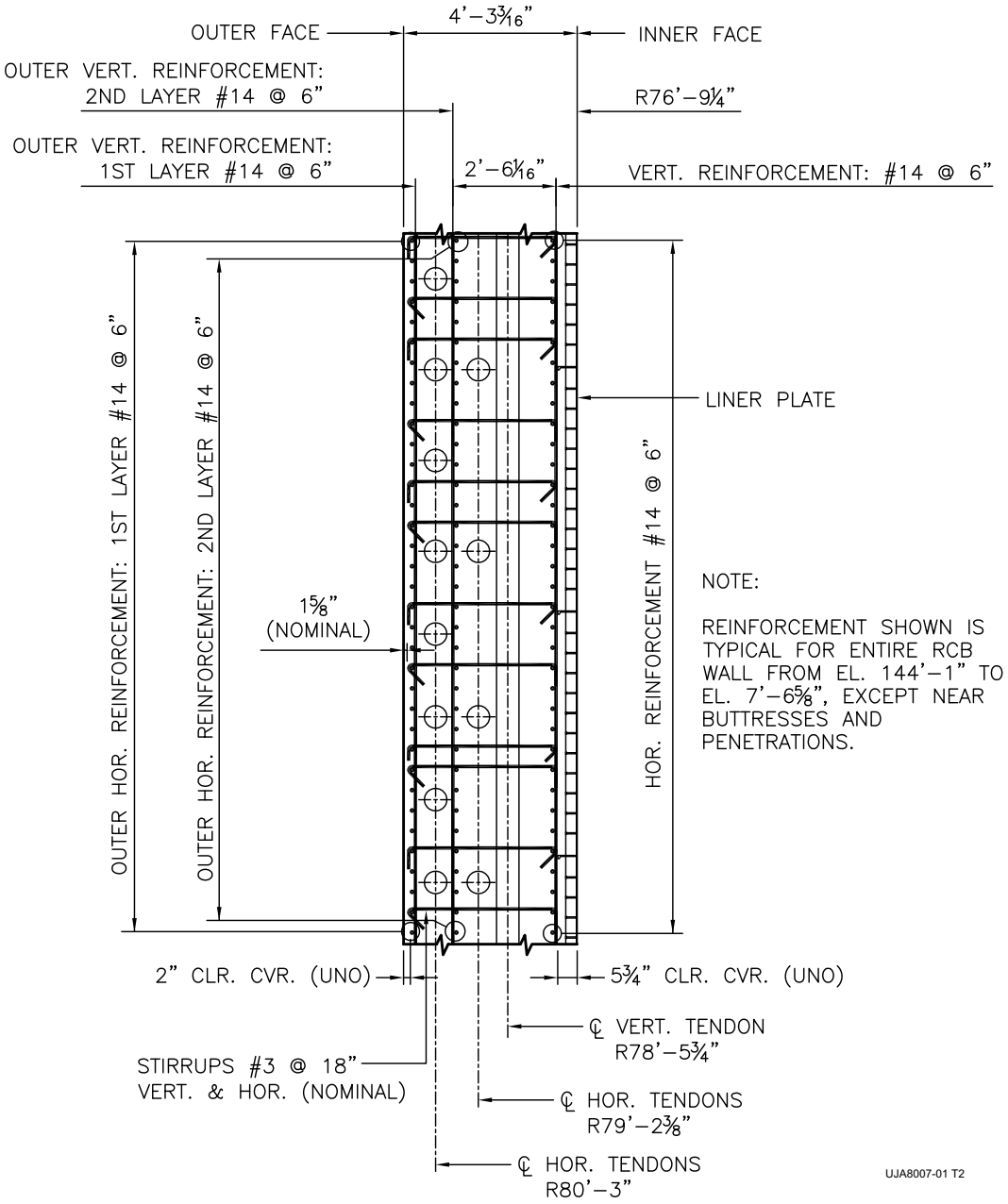

Figure 3E.1-24—Containment Buttress Reinforcement (Typical Narrow Section)

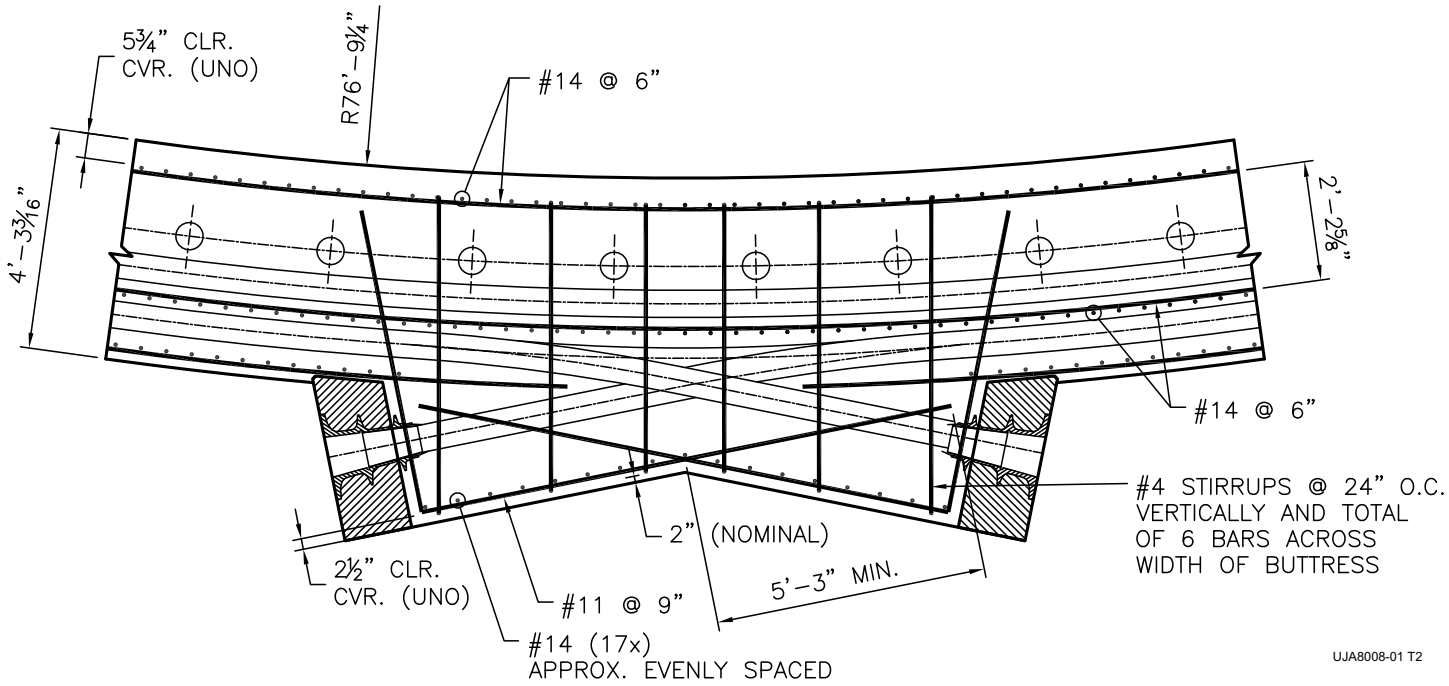

Figure 3E.1-25—Containment Buttress Reinforcement (Typical Wide Section)

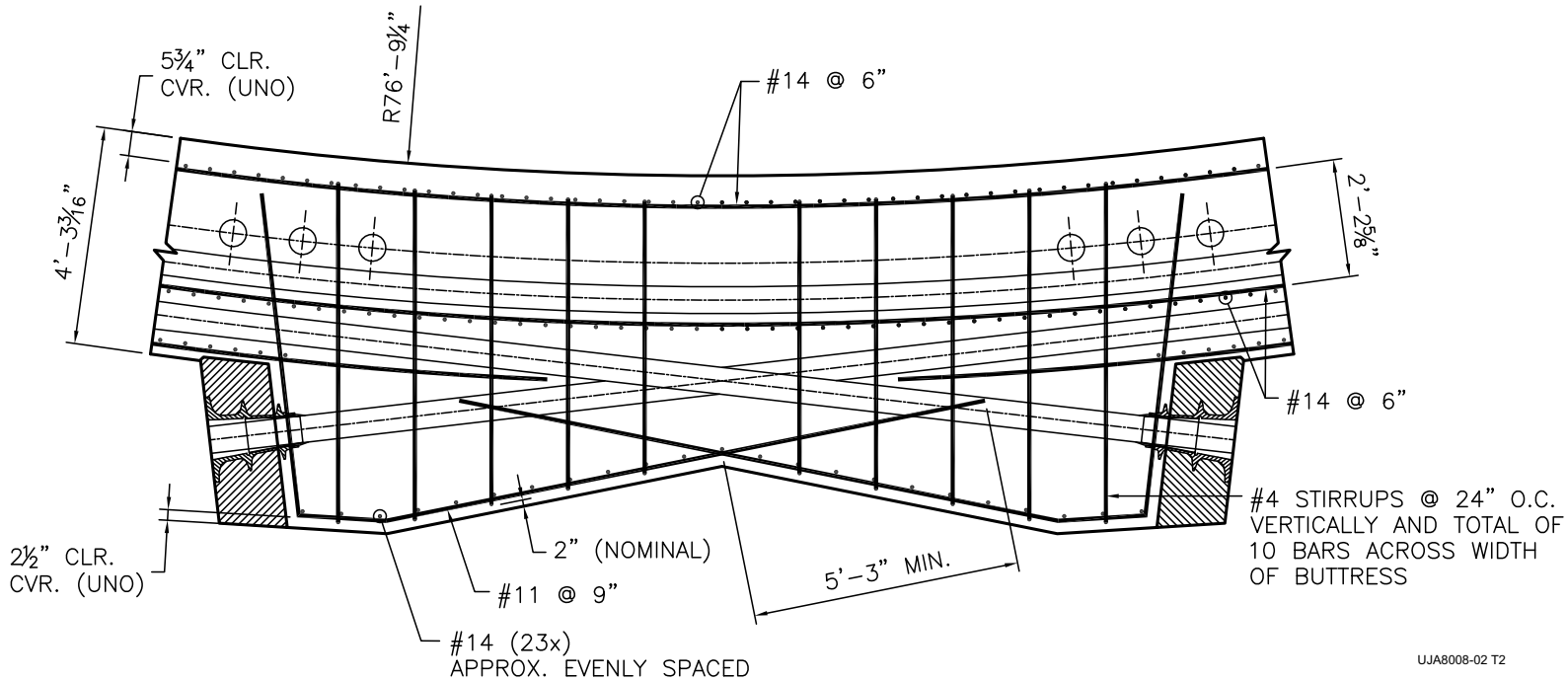

Figure 3E.1-26—Floor Slab Plan View at Elevation 4'-11 1/16"

Figure 3E.1-27—Typical Cavity Walls Plan View

Figure 3E.1-28—Isolated View of FEM For Floor Slab and SG/RCP Wing Wall

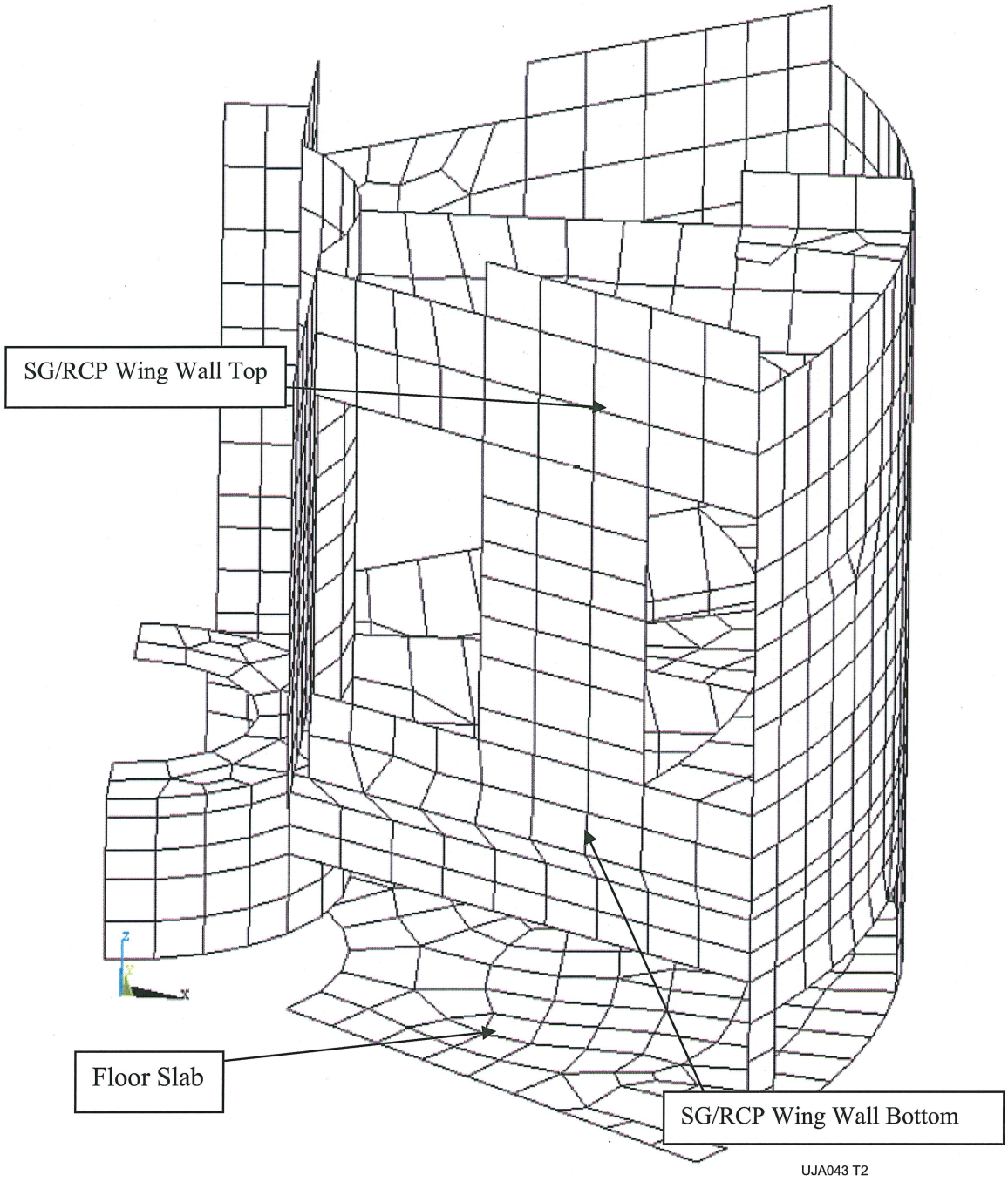

Figure 3E.1-29—Isolated View of FEM For Floor Slab and SG/RCP Separation Wall

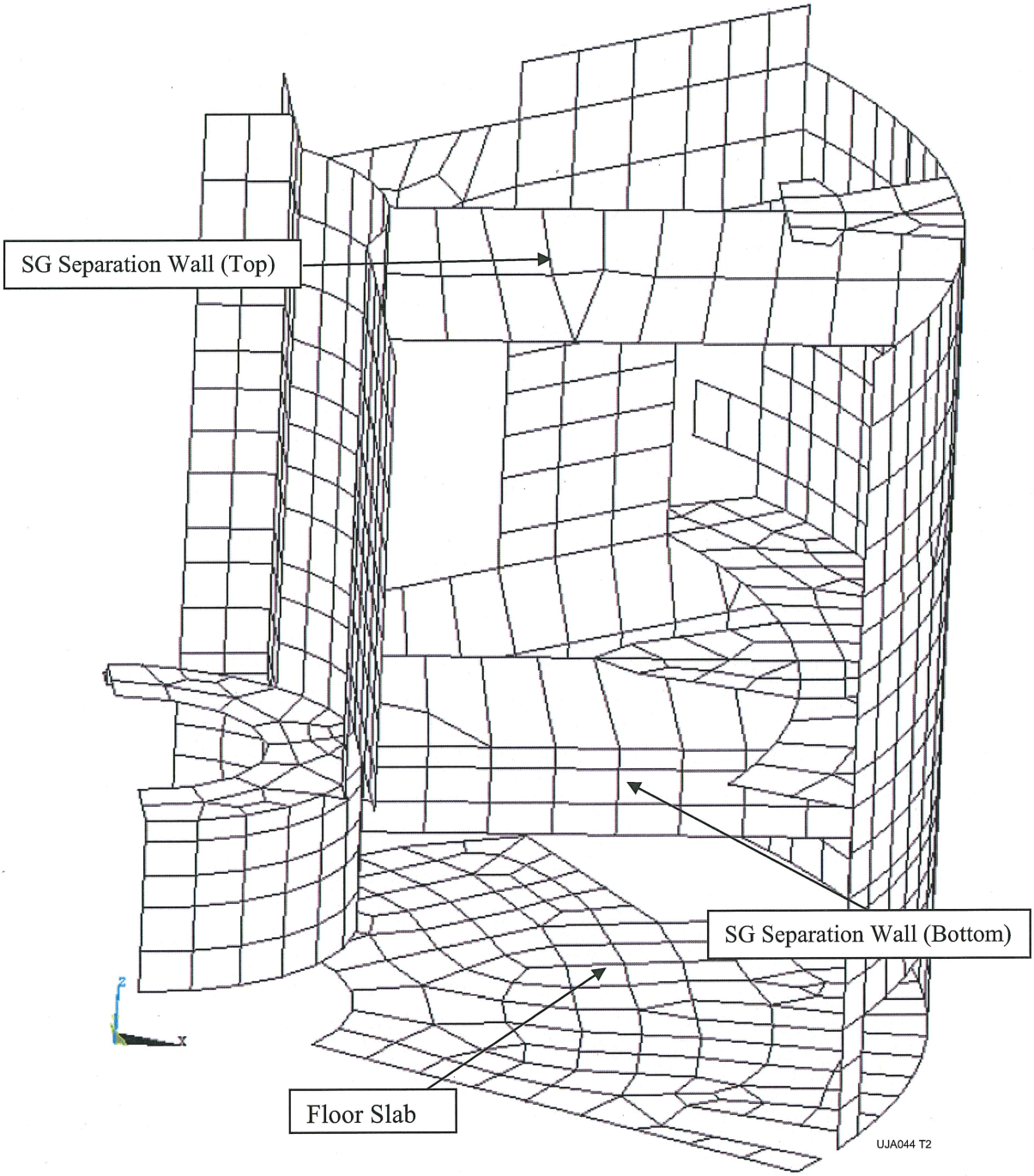

Figure 3E.1-30—Area of Detail for Floor Slab at Elevation 4'-11 1/16" with Thickness 6'-6 3/4”

Figure 3E.1-31—Reinforcement of Floor Slab at Elevation 4'-11 1/16", Section 1-1

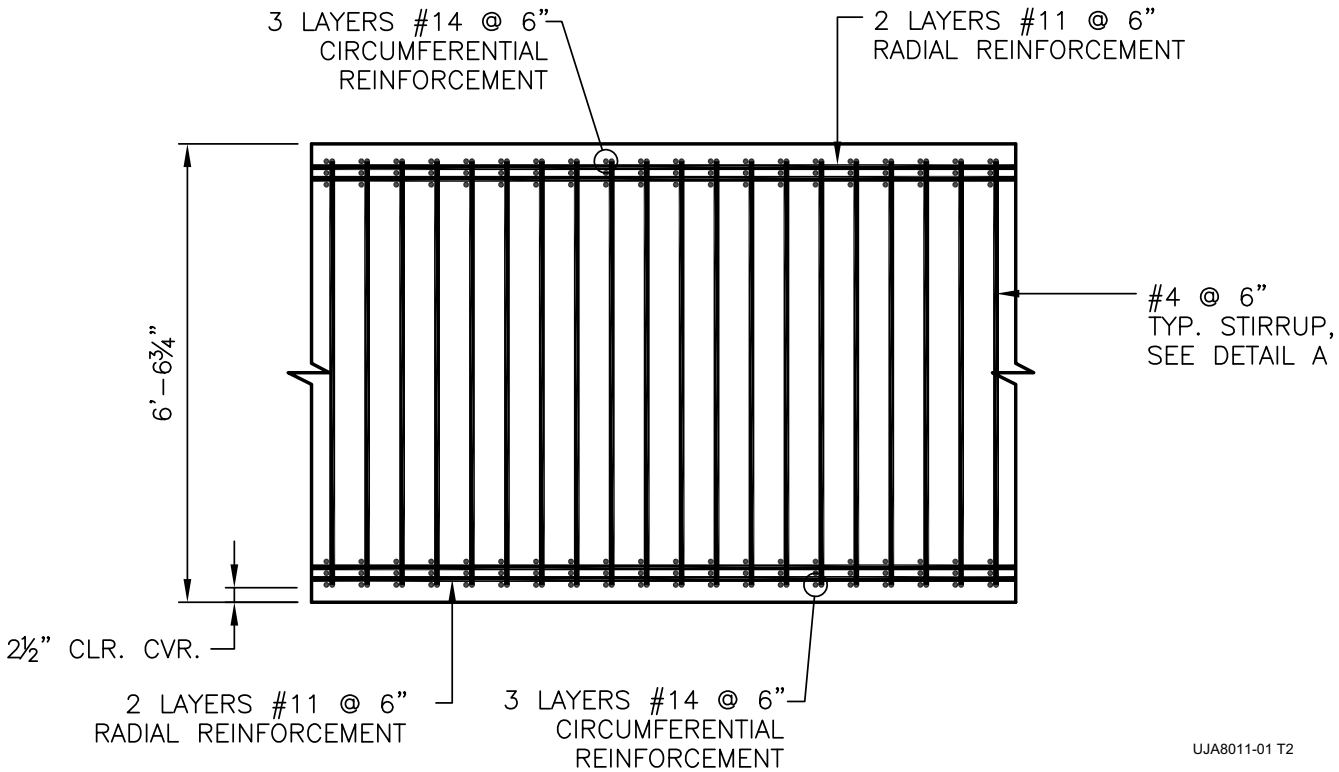

Figure 3E.1-32—Area of Detail for Floor Slab at Elevation 4'-11 1/16" with Thickness 3'-3 3/8"

Figure 3E.1-33—Reinforcement of Floor Slab Section 3-3

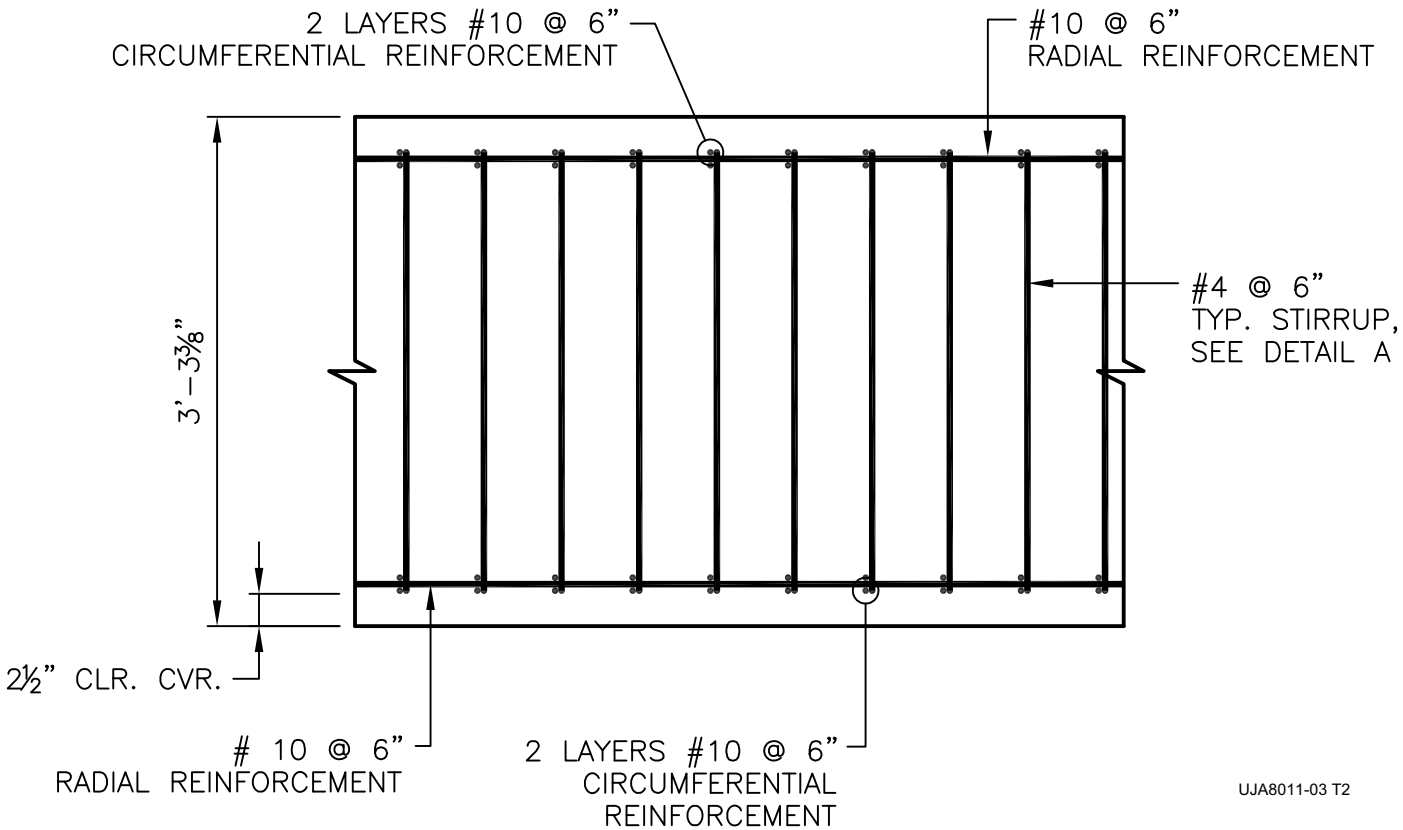

Figure 3E.1-34—Reinforcement of Floor Slab Section 2-2

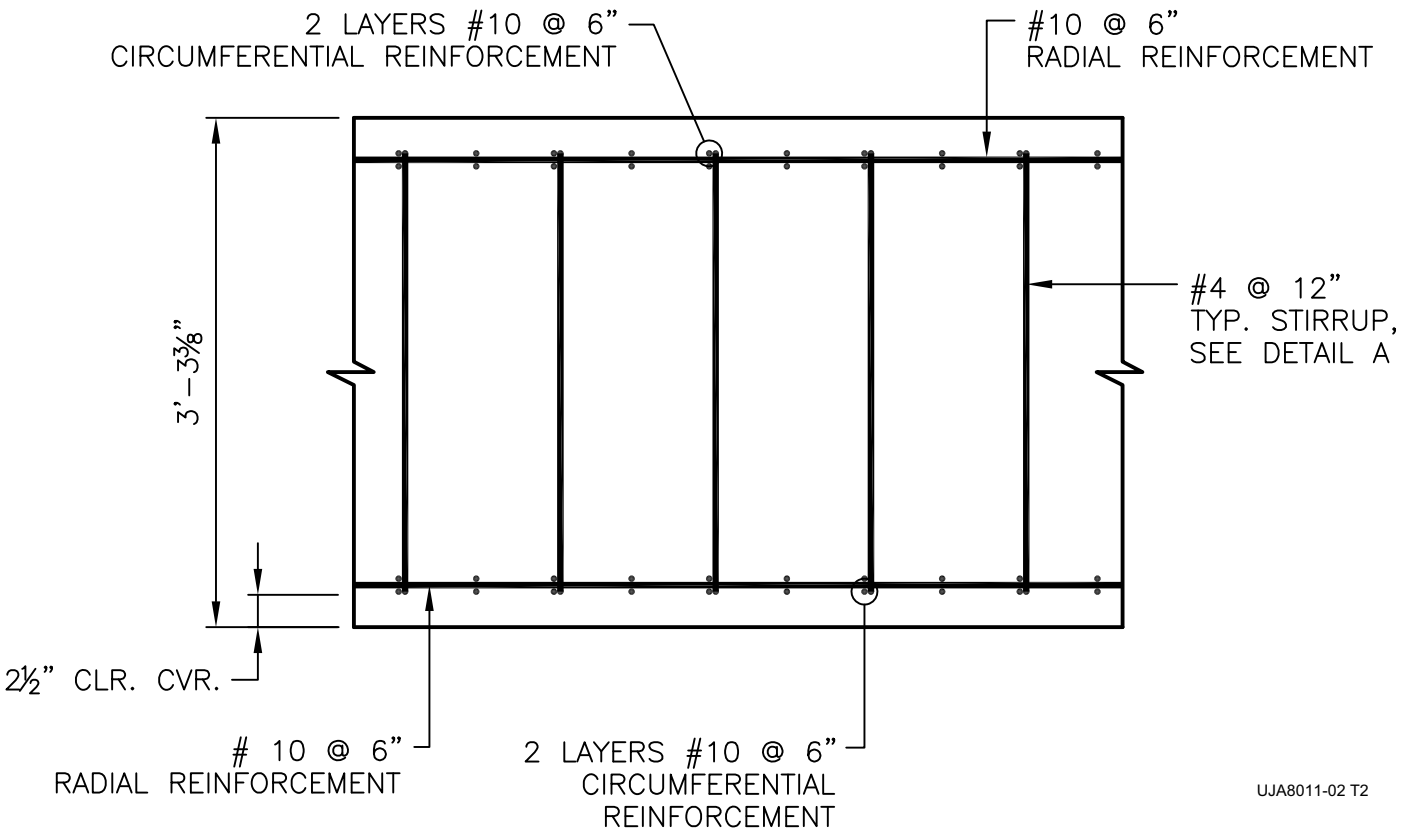

Figure 3E.1-35—Area of Detail for SG/RCP Wing Wall Bottom

Figure 3E.1-36—SG/RCP Wing Wall Bottom Reinforcement

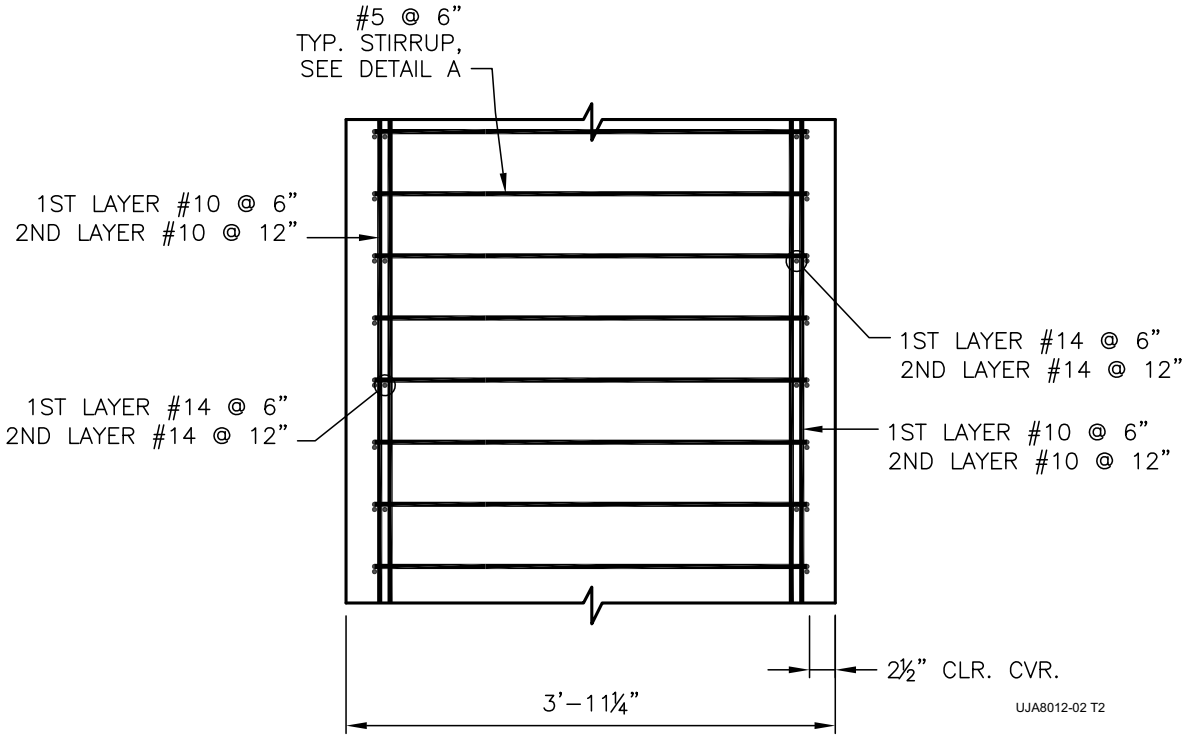

Figure 3E.1-37—Area of Detail for SG/RCP Wing Wall Top

Figure 3E.1-38—SG/RCP Wing Wall Top Reinforcement

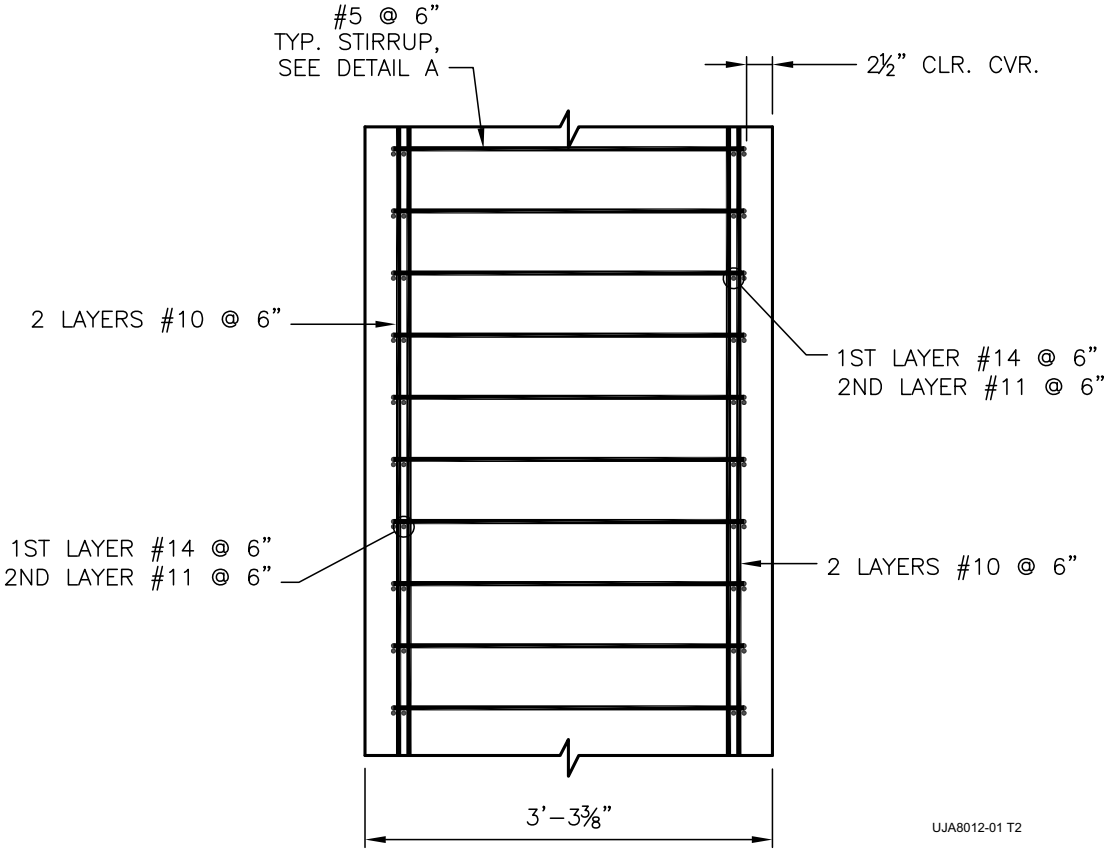

Figure 3E.1-39—Area of Detail for SG Separation Wall Bottom

Figure 3E.1-40—SG Separation Wall Bottom Reinforcement

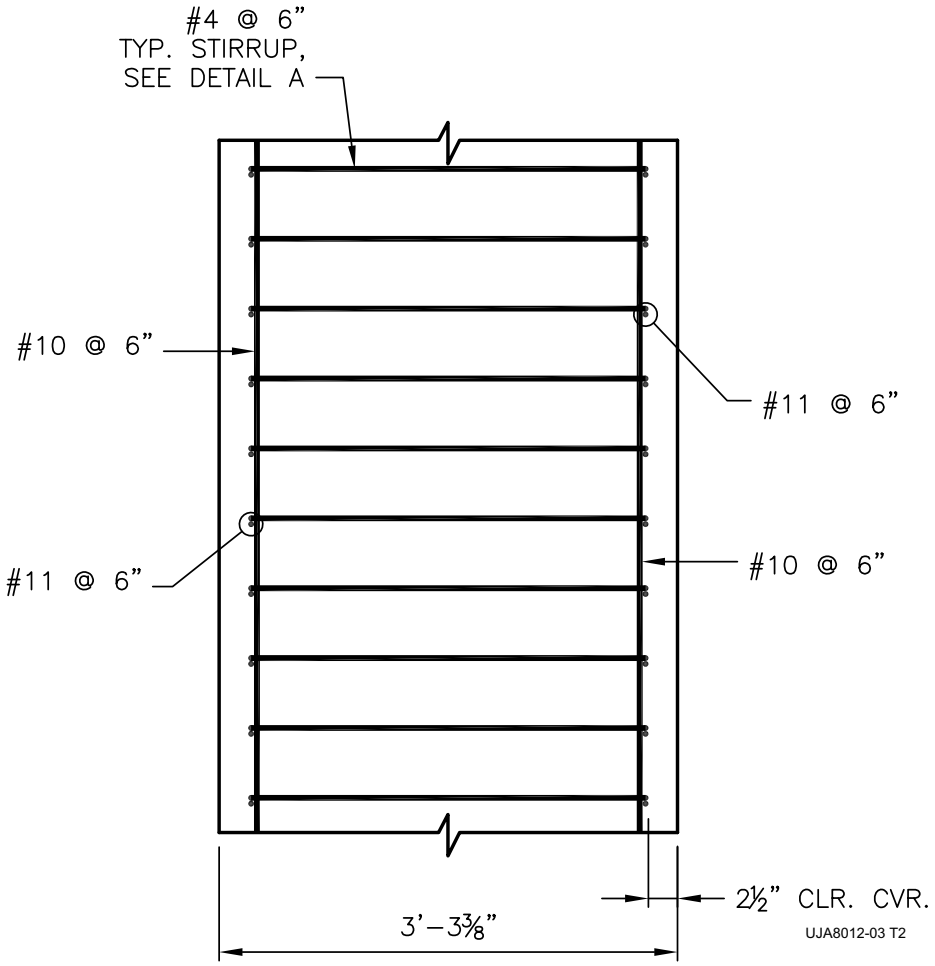

Figure 3E.1-41—Area of Detail for SG Separation Wall Top

Figure 3E.1-42—SG Separation Wall Top Reinforcement

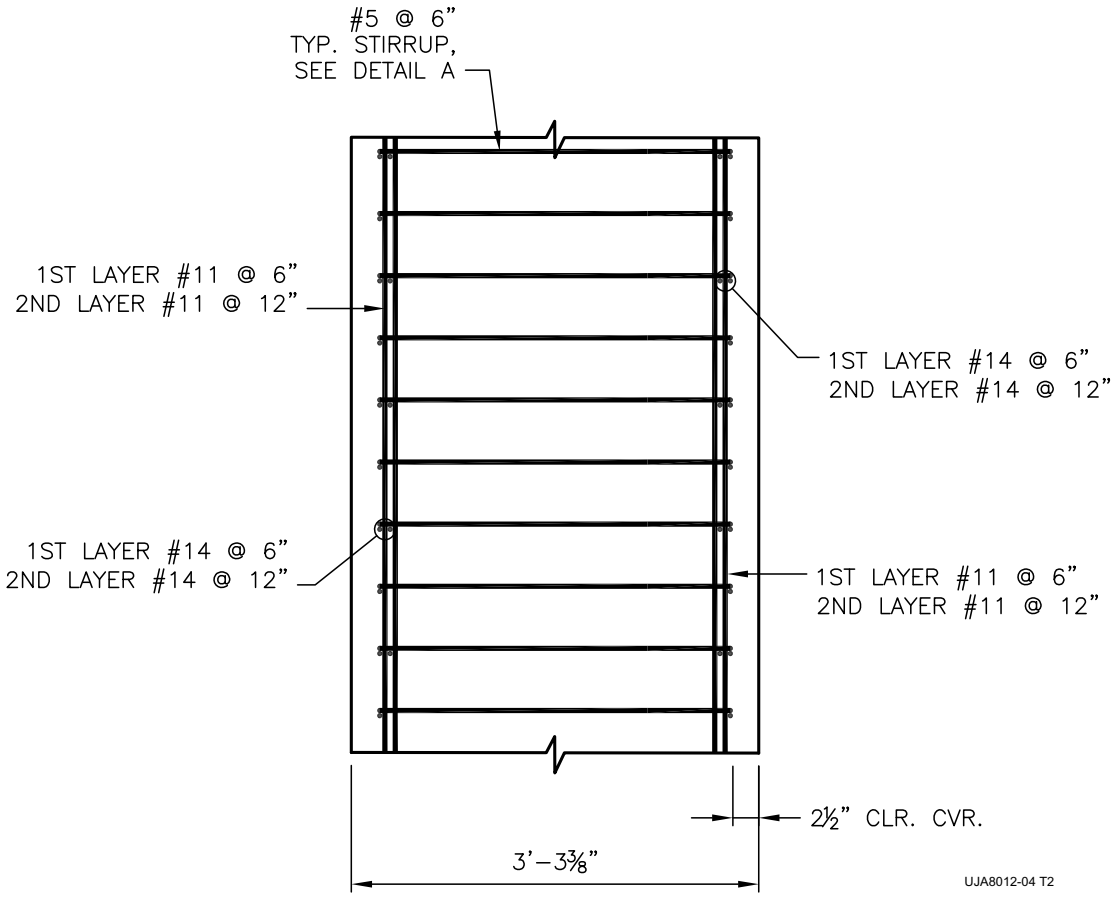

Figure 3E.1-43—Location of PZR Cubical

Figure 3E.1-44—PZR Isometric View Showing Support Locations

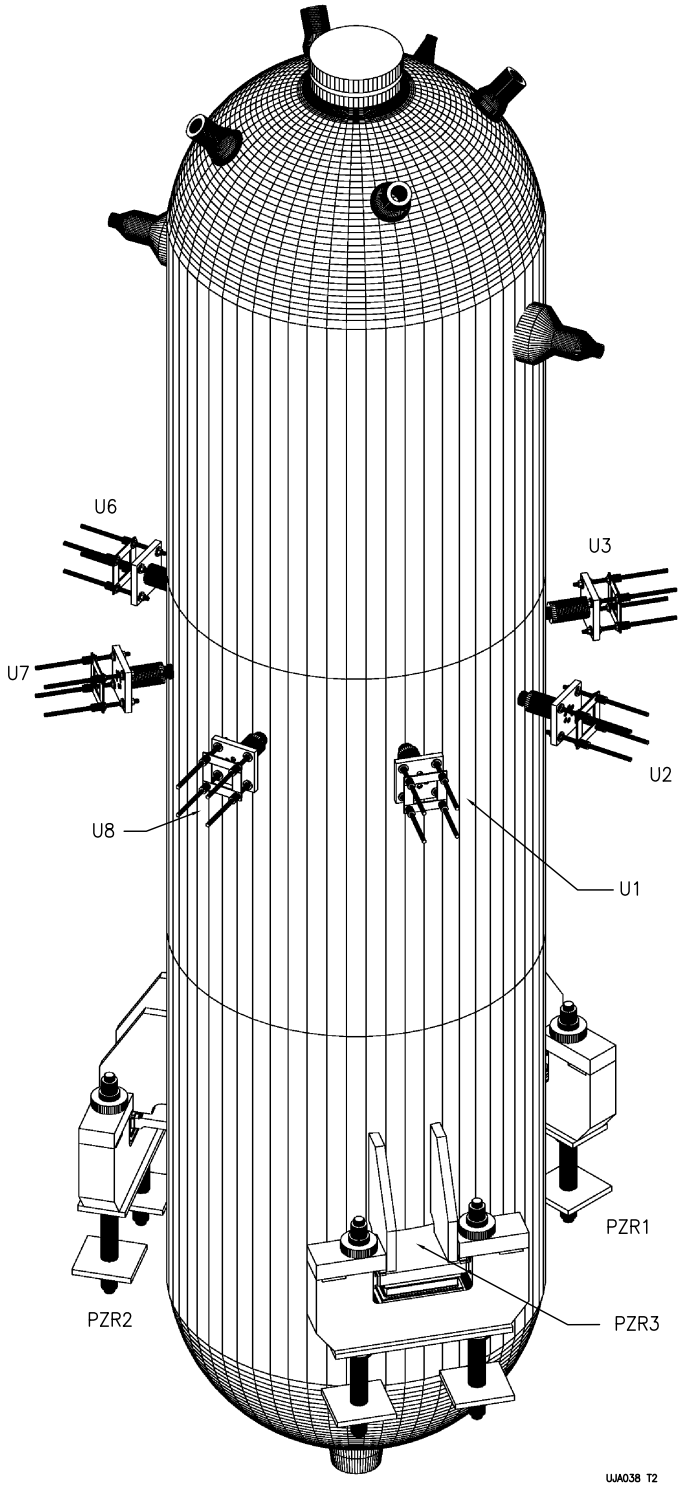

Figure 3E.1-45—Plan View of FEM for Floor Slab of PZR Cubical

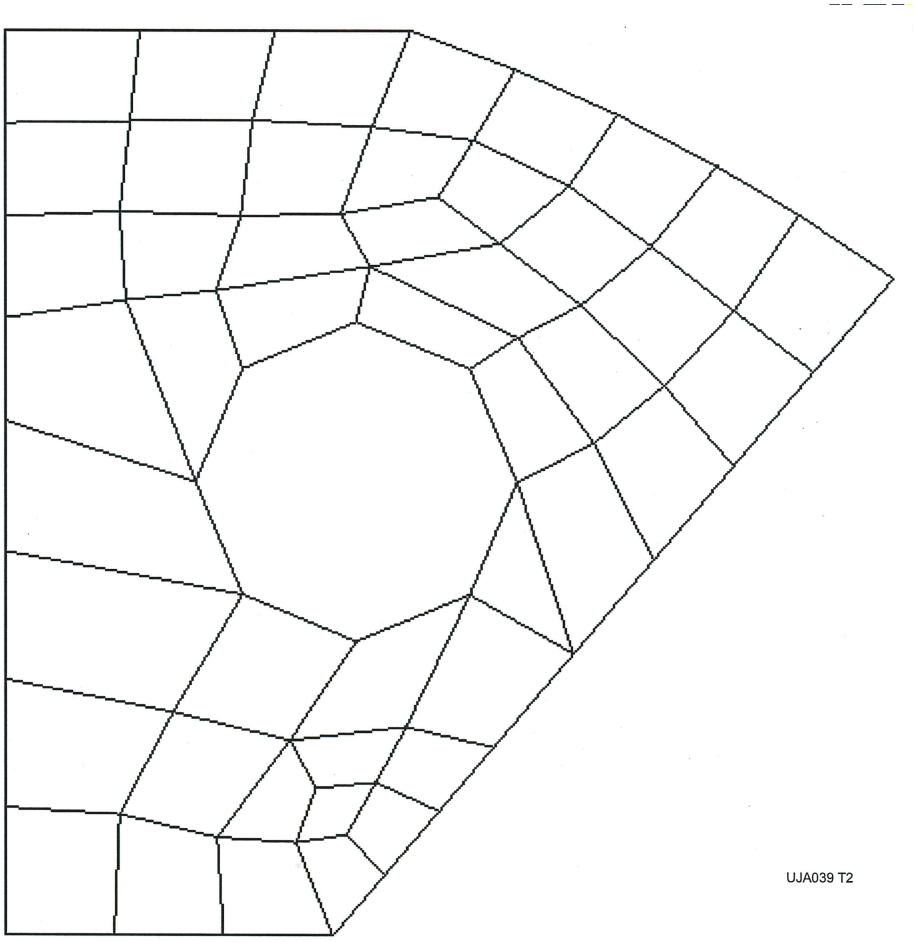

Figure 3E.1-46—Elevation View of FEM for Wall Section of PZR Cubical

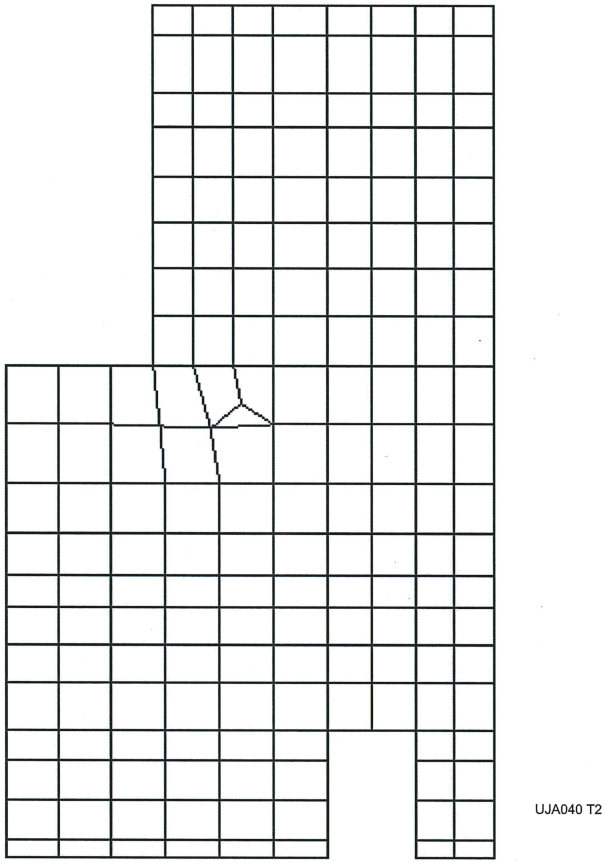

Figure 3E.1-47—PZR Floor Slab Section - Reinforcement at Support

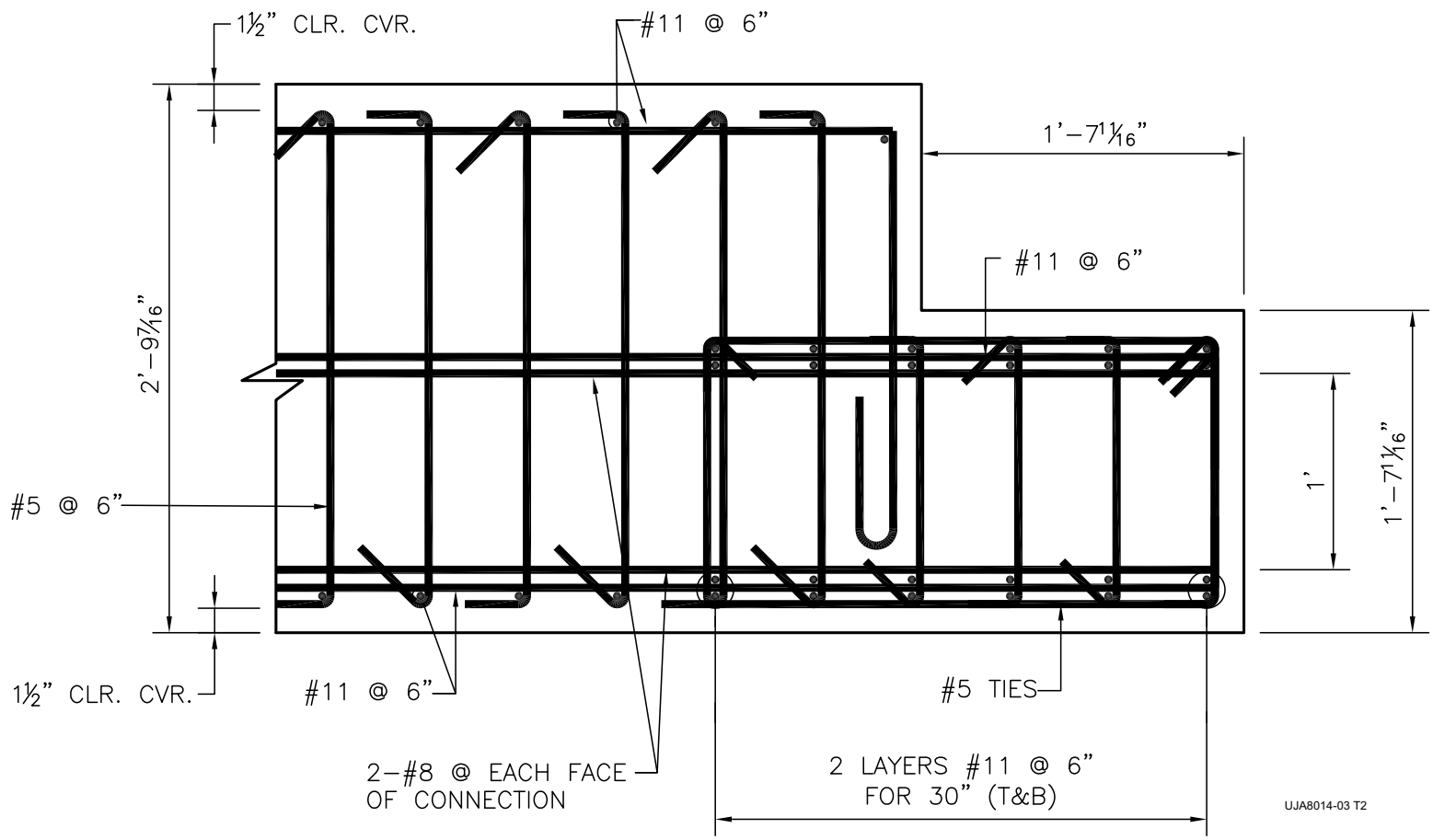

Figure 3E.1-48—PZR Wall Section - Typical Reinforcement

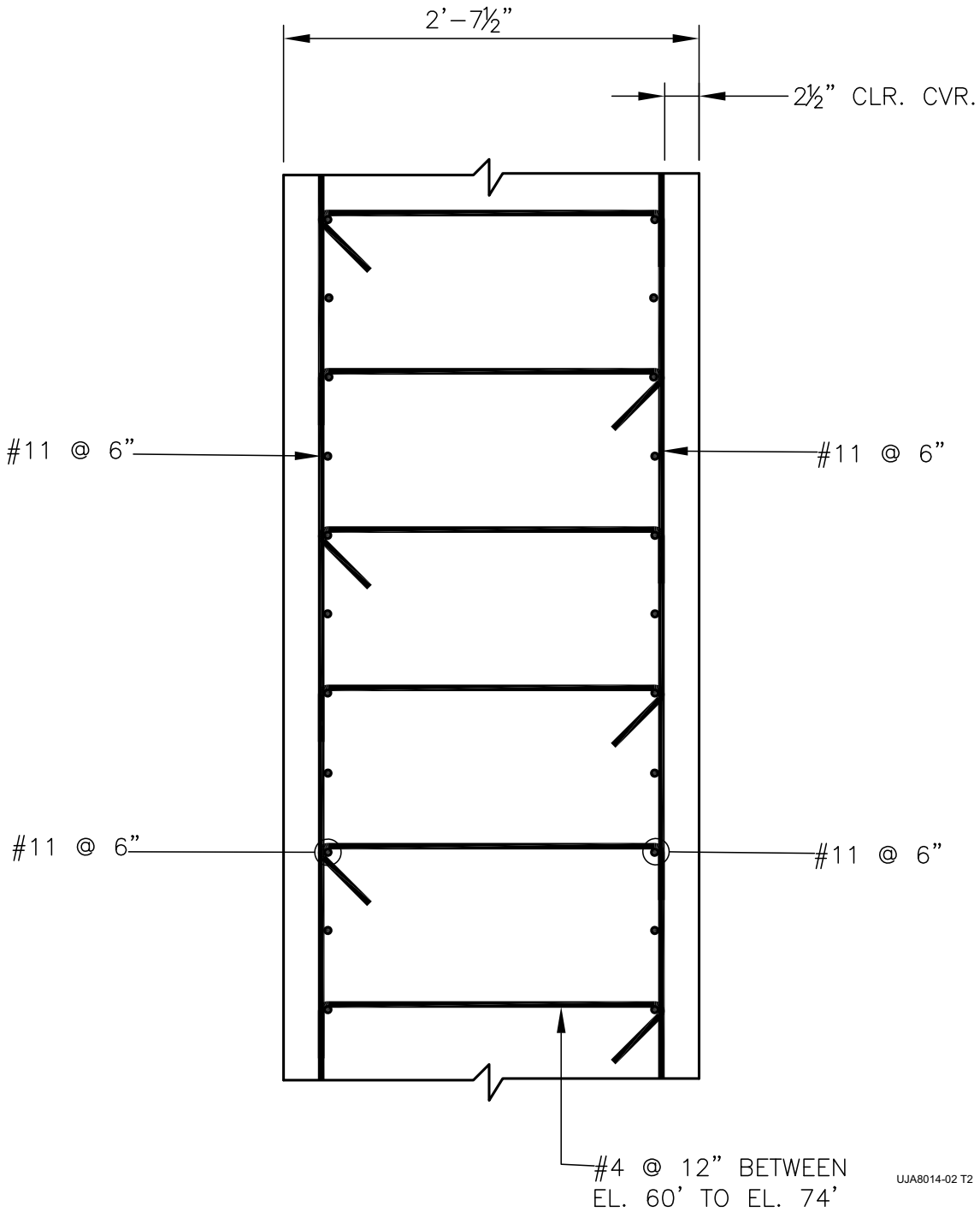

Figure 3E.1-49—RB Operating Floor - Elevation 63'-11 11/16" Showing Section Locations

Figure 3E.1-50—Plan View of RB Operating Floor Showing Rooms

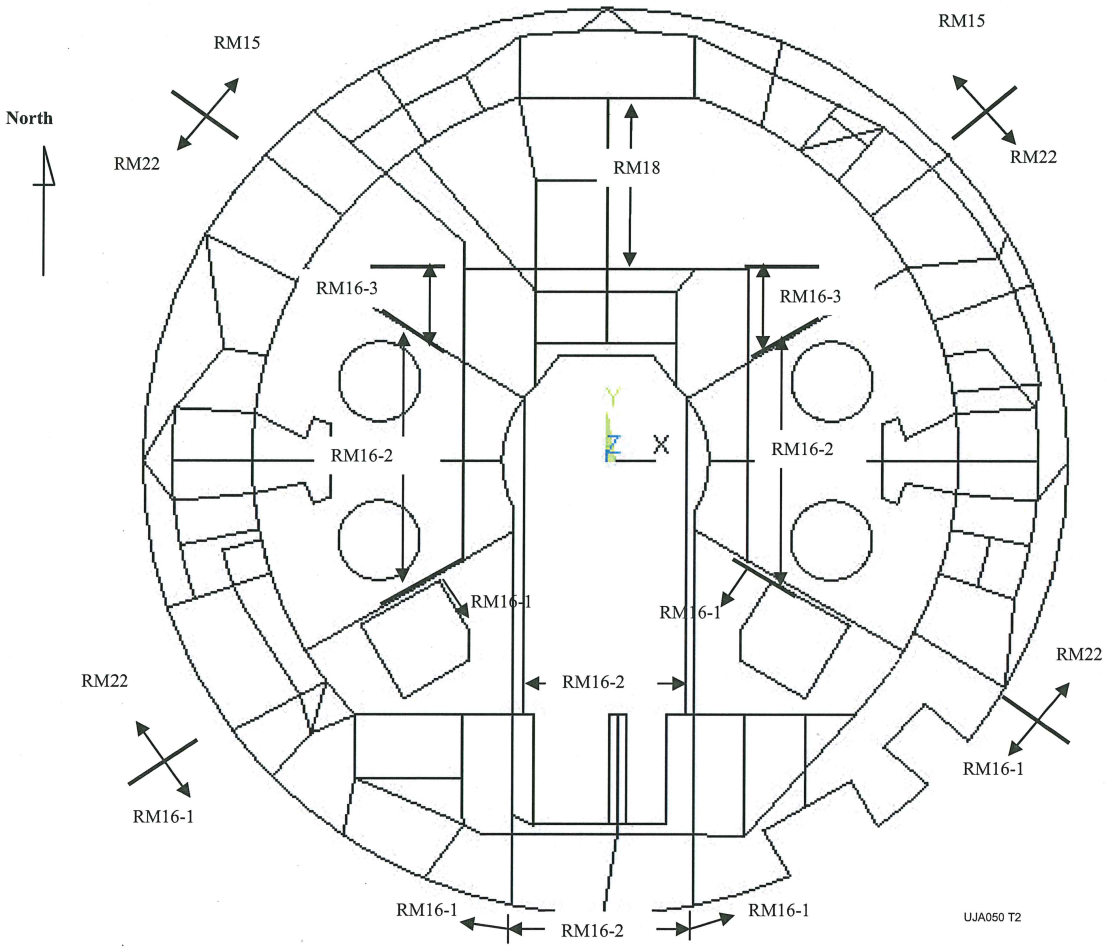

Figure 3E.1-51—RB Operating Floor Reinforcement - Section 1-1

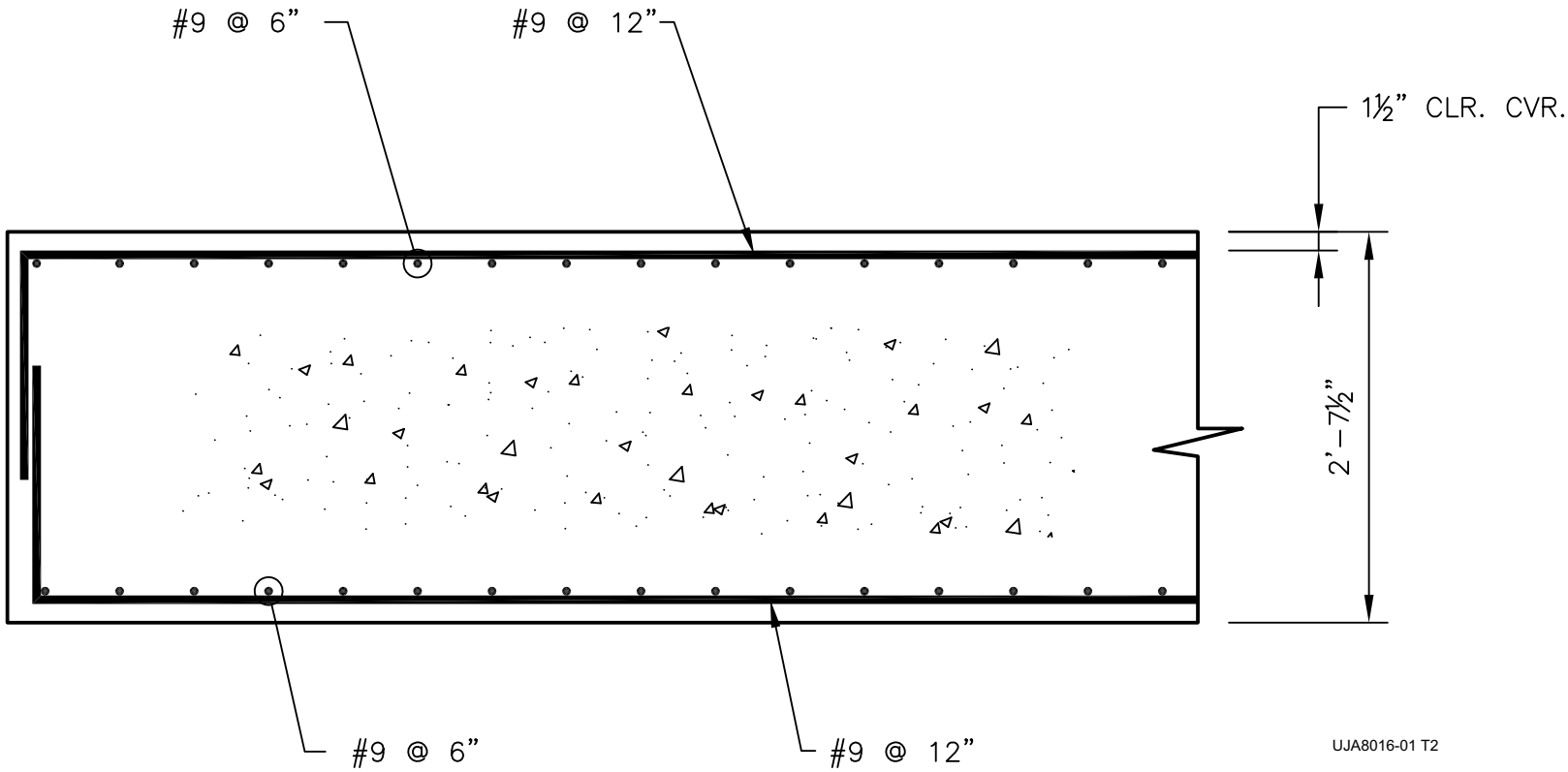

Figure 3E.1-52—RB Operating Floor Reinforcement - Section 2-2

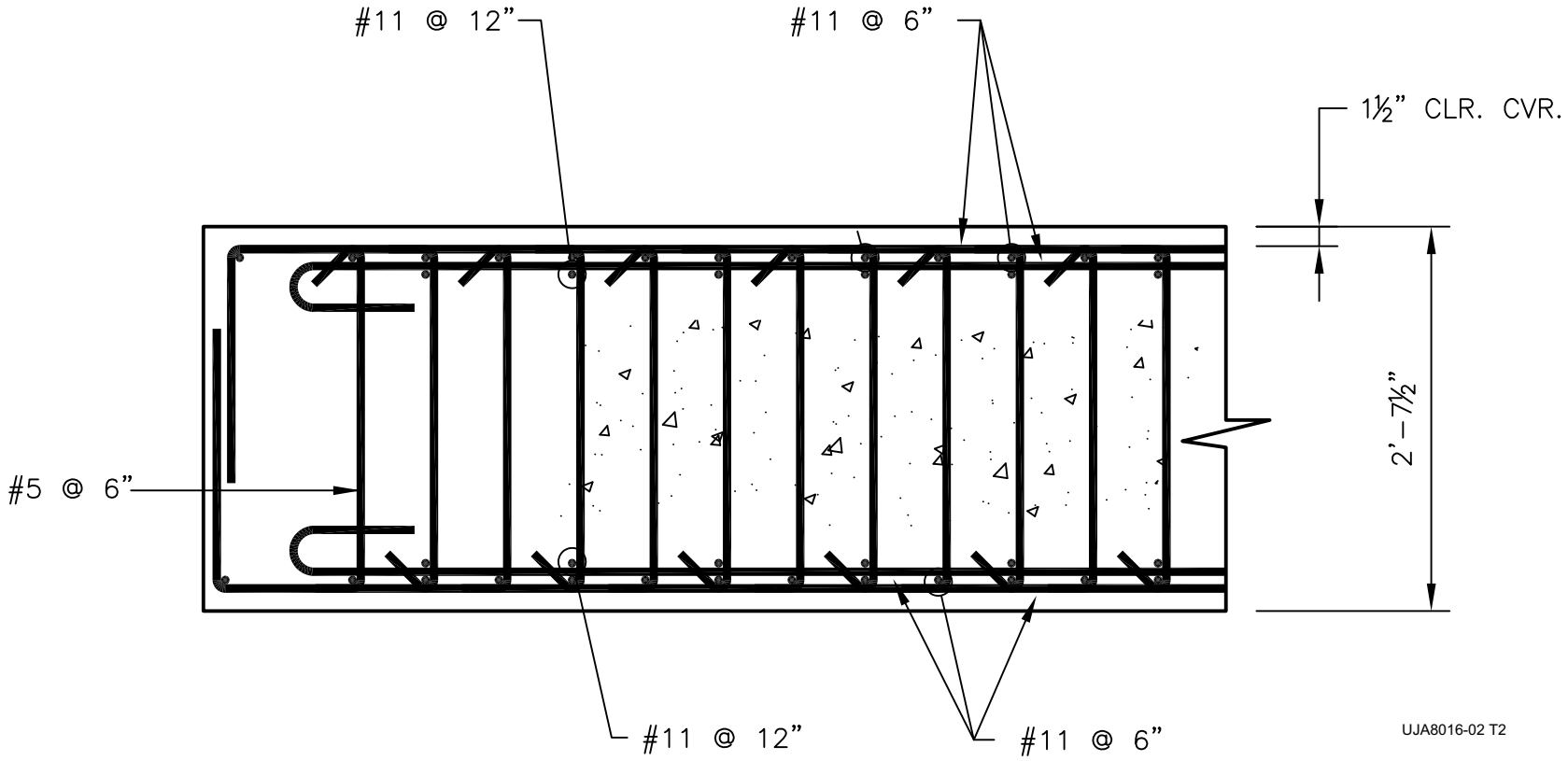

Figure 3E.1-53—RB Operating Floor Reinforcement - Section 3-3 and 4-4

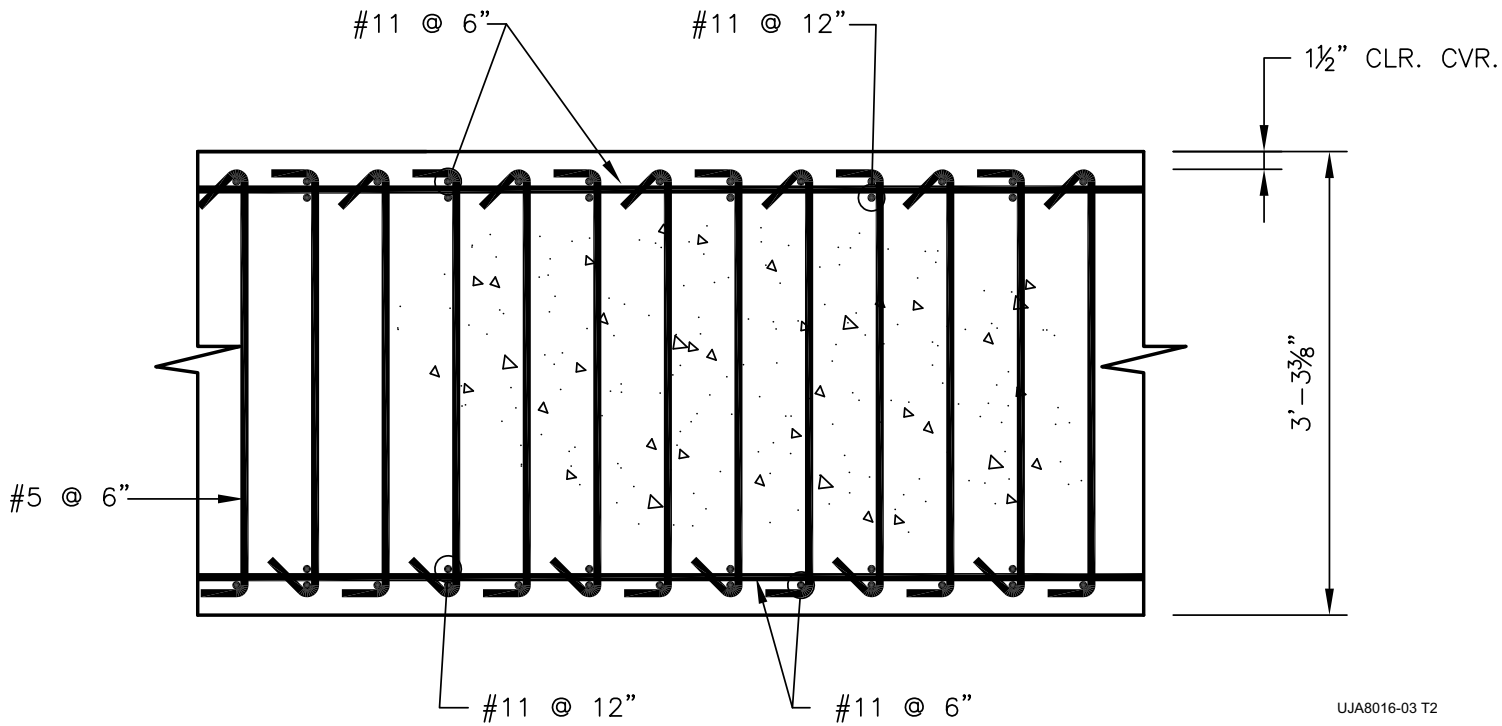

Figure 3E.1-54—RB Operating Floor Reinforcement - Section 5-5

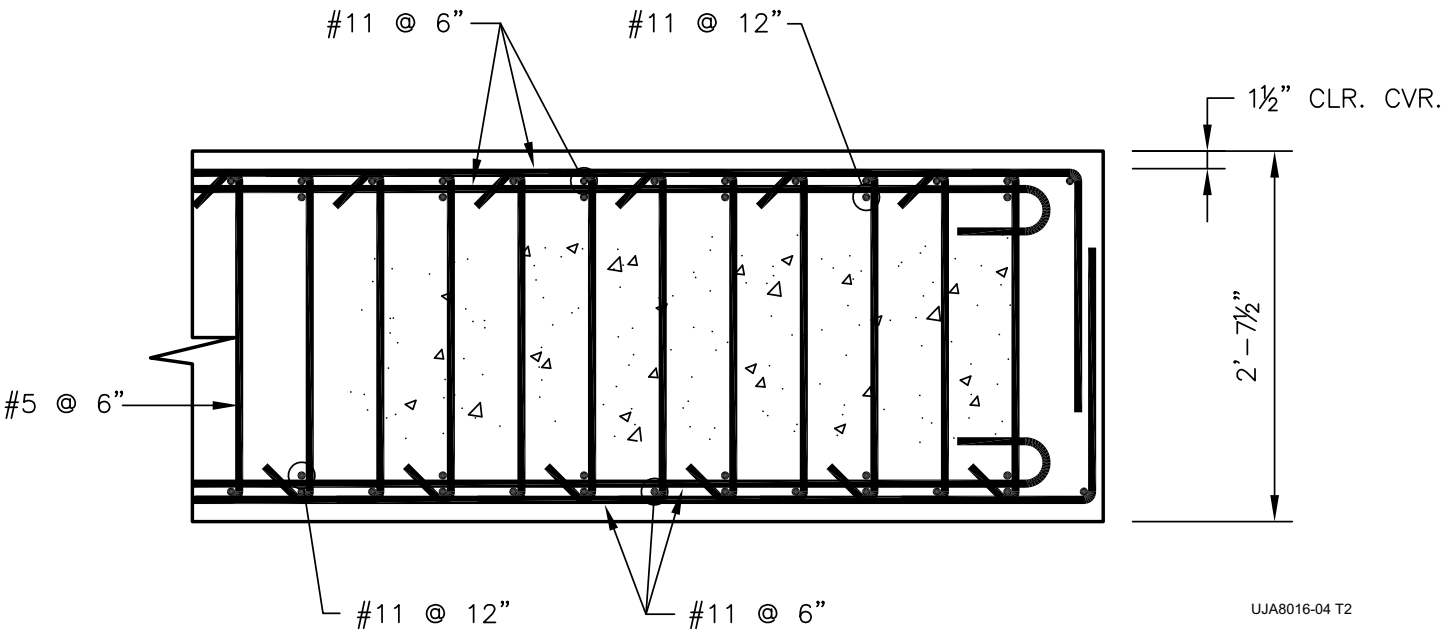

Figure 3E.1-55—RB Operating Floor Reinforcement - Section 6-6

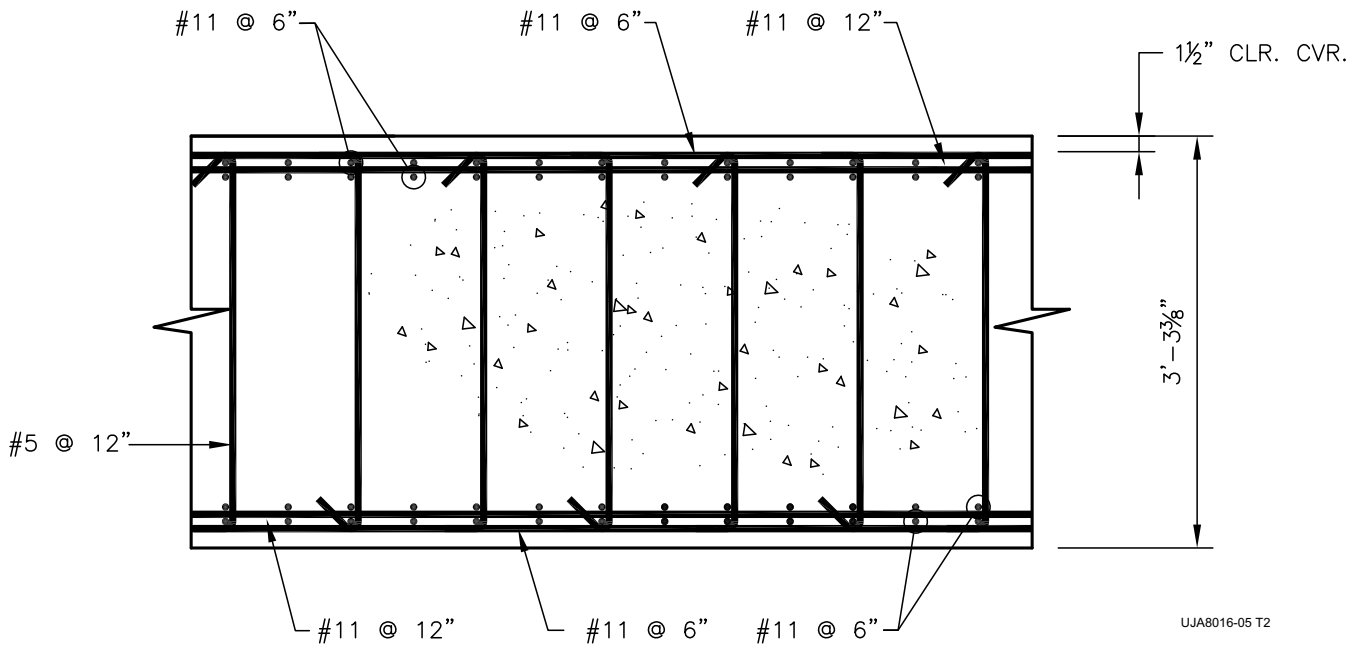

Figure 3E.1-56—RB Operating Floor Reinforcement - Section 7-7

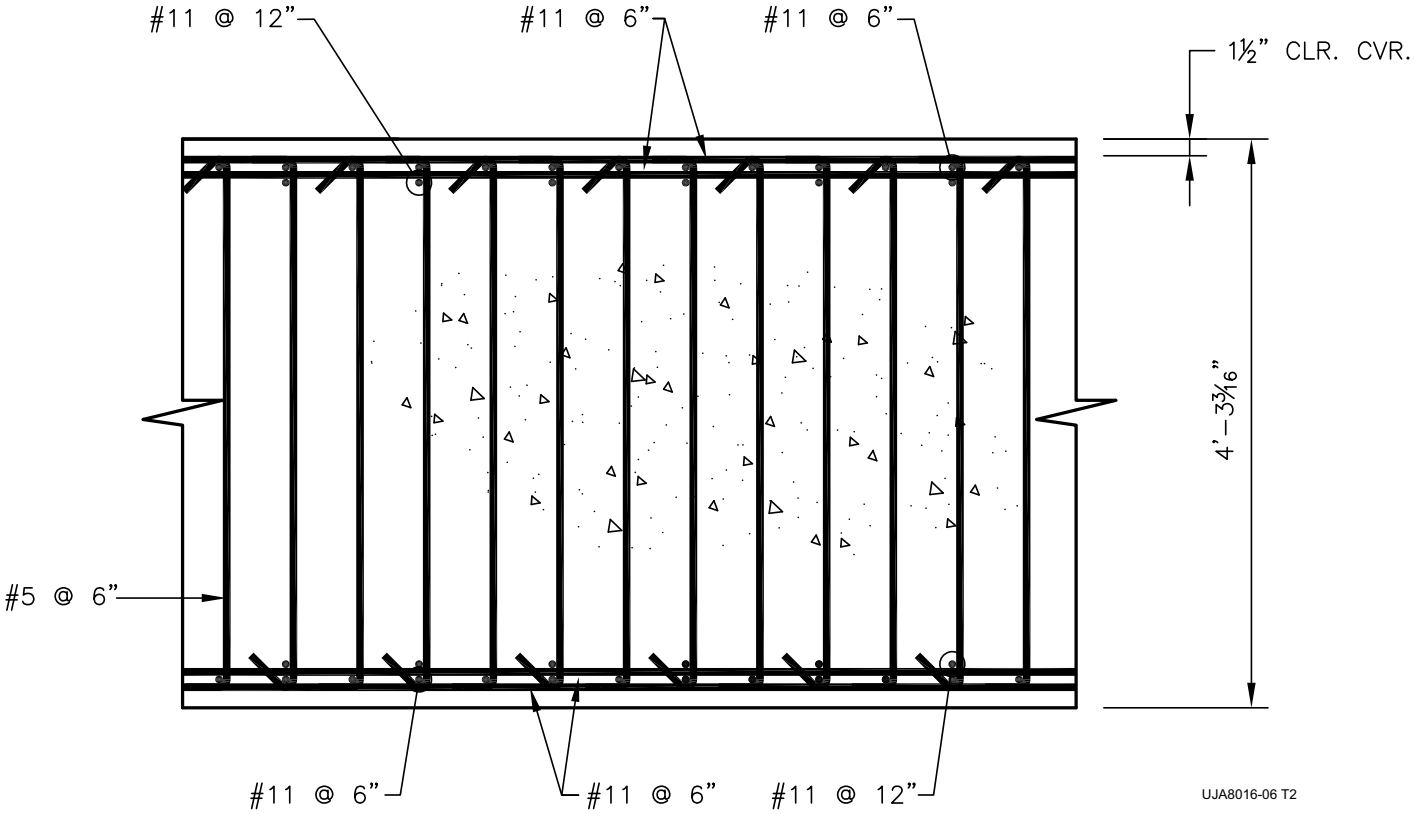

Figure 3E.1-57—RB Operating Floor Reinforcement - Section 8-8

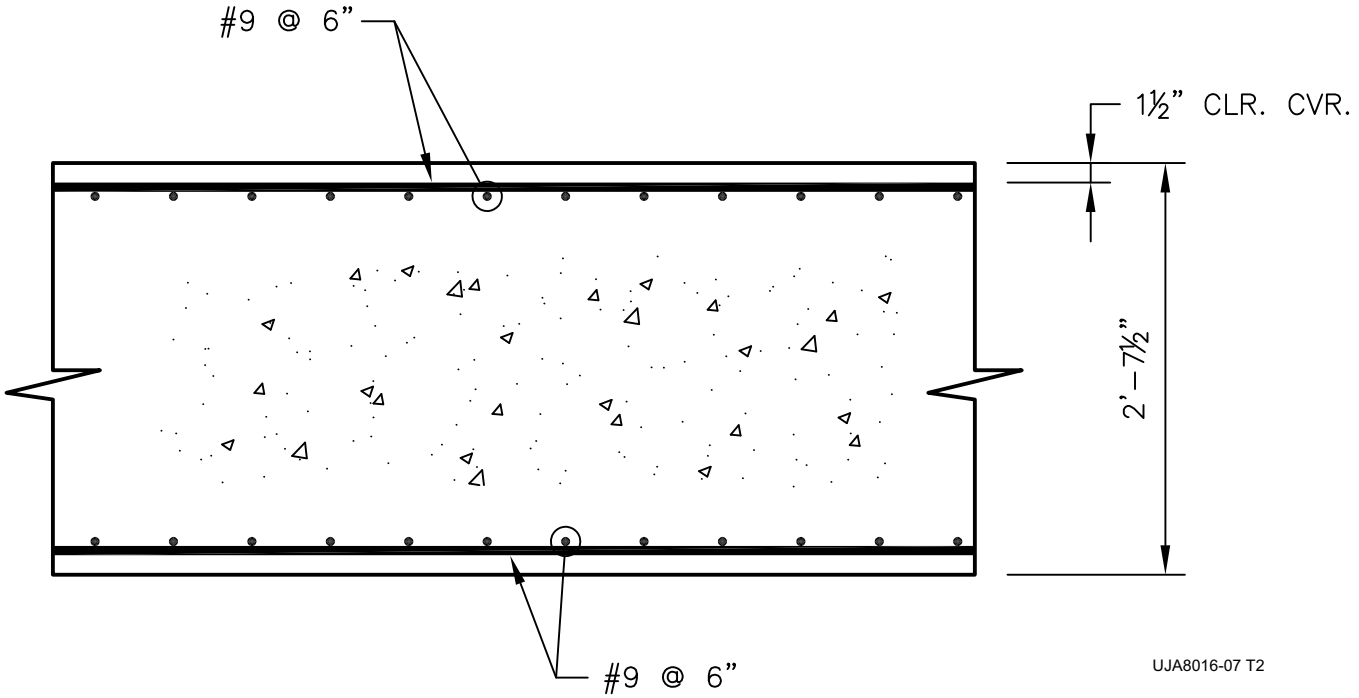

Figure 3E.1-58—RSB Wall Vertical Design Boundaries

Figure 3E.1-59—FB Roof and RSB Wall Design Boundaries

Figure 3E.1-60—SB 2&3 Roof and RSB Wall Design Boundaries