APPENDIX VI

PUBLIC SUMMARY

APPENDIX VI

PUBLIC SUMMARY

Nuclear fission in power reactors produces a large amount of energy which has been harnessed for the production of electricity. Fission also creates radioactive products which are contained in fuel rod pins in nuclear fuel assemblies. Therefore, spent nuclear fuel is very radioactive when first removed from a reactor, but will decay and become less radioactive over time. People are understandably concerned when spent fuel is moved in trucks and by rail over public roads and railroads. Thirty-five years ago the United States Nuclear Regulatory Commission (NRC) responded to this concern by estimating what the radiological impact of transporting radioactive materials, including spent fuel, would be. The result was the Final Environmental Statement on the Transportation of Radioactive Material by Air and Other Modes, NUREG-0170, published in 1977. NUREG-0170 was an environmental impact statement (EIS) for transportation of all types of radioactive material by road, rail, air, and water, and concluded:

- The average radiation dose to members of the public from routine transportation of radioactive materials is a fraction of their background dose[1].
- The radiological risk from accidents in transporting radioactive materials is very small compared to the non-radiological risk from accidents involving large trucks or freight trains.

On the basis of this EIS, NRC regulations in 1981 were considered "adequate to protect the public against unreasonable risk from the transport of radioactive materials." However, the adequacy of these regulations continued to be questioned in part because the EIS was based on estimates of radiation dose and accident rates, for which not much data or information had been available. Questions about "reasonable" risk and about accident consequences ("what if the accident does happen?") have also been raised. The present work uses advanced models, risk assessment methods, and updated data to provide a current assessment of the risks and consequences of transporting spent nuclear fuel.

All commodities that are transported by truck or rail can be involved in accidents. Trucks and railcars carrying spent nuclear fuel transportation casks are no exception. The NRC recognizes this, and requires that spent fuel casks be designed and built to withstand severe transportation accidents. NUREG-0170 and later studies of casks have considered accident conditions more severe than the regulations require for cask certification. A 1987 study applied actual accident statistics to projected spent fuel transportation (Fischer et al., 1987). This "Modal Study" also recognized that accidents could be described in terms of the strains they produced in the cask (for impacts) and the increase in cask temperature (for fires). Like NUREG-0170, the 1987 study based risk estimates on models because the limited number of accidents that had occurred involving spent fuel shipments was not sufficient to support projections or predictions. The Modal Study's refinement of modeling techniques and use of accident frequency data resulted in smaller assessed risks than had been projected by NUREG 0170.

[1] The background dose is the average dose any individual will receive over the period of a year while conducting routine, everyday activities (3.6 millisieverts)

A 2000 study of two generic truck casks and two generic rail casks analyzed the cask structures and response to accidents using computer modeling techniques (Sprung et al., 2000). Semi-trailer truck and rail accident statistics for general freight shipments were used because even though more than a thousand spent fuel shipments had been completed in the U. S. by 2000, and many thousands more completed safely internationally, there had been too few accidents involving spent fuel shipments to provide statistically valid accident rates.

The release of radioactive material from a cask in an accident and its subsequent dispersion has also been modeled with increasing refinement in the series of risk assessments. NUREG-0170 assumed that most very severe accidents would result in release of all of the releasable cask contents to the environment; this engineering judgment overstated the release but was nevertheless used because analytical capabilities at the time did not permit a more accurate assessment. The 2000 study analyzed the physical properties of spent fuel rods in a severe accident, and revised estimates of material released to one percent or less of the NUREG-0170 estimates (NRC, 1977). Accordingly, risk estimates were revised downward. The 2000 study also verified that an accidental release of radioactive material could only be through the seals at the end of the cask where the lid is attached. In other words, an accident could cause seal failure, but would not breach the cask body (Sprung et al., 2000).

The present study models certified cask designs (rather than generic casks) and the commercial spent nuclear fuel that these casks are certified to transport. Two rail casks and a truck cask are evaluated.

Almost all spent fuel casks are shipped without incident. However, even this routine, incident-free transportation causes radiation exposures because all loaded spent fuel casks emit some external radiation. The radiation dose rates for spent fuel shipments are measured before each shipment and must be maintained within regulatory limits. The radiation dose from this external radiation to any member of the public during routine transportation, including stops, is barely discernible compared to the public's natural background radiation. Figure VI-1 shows an illustration of a rail cask and the way the radiation to a member of the public is modeled.

Comment [MF1]: There is a continuing lack of uniformity in the reference to NUREG-0170, sometimes the – is present others it is not. Surely a technical editor will fix this but I would assume an editor has already seen this document and it hasn't been fixed.

Comment [MF2]: Appendix VI, p. VI-4, 2nd para, 2nd sentence: NUREG-0170 assumed "release of all the releasable cask contents to the environment". I will re-state my comment from earlier draft: I think this statement deserves a better explanation for the public. What are the "releasable" cask contents? Why wouldn't all of the "releasable" contents be released? Perhaps another sentence indicating that many, but not all, of the radioactive products (e.g., those in gas form) in SNF can potentially migrate and be released from the fuel matrix under certain pressure and temperature conditions. Then next sentence could note that -0170 used simple assumption that conditions would exist such that all releasable radioactive products would be released.

Comment [MF3]: The last sentence describing Figure VI-1 needs to discuss the 1 m dose location since it is shown on the Figure but not discussed.

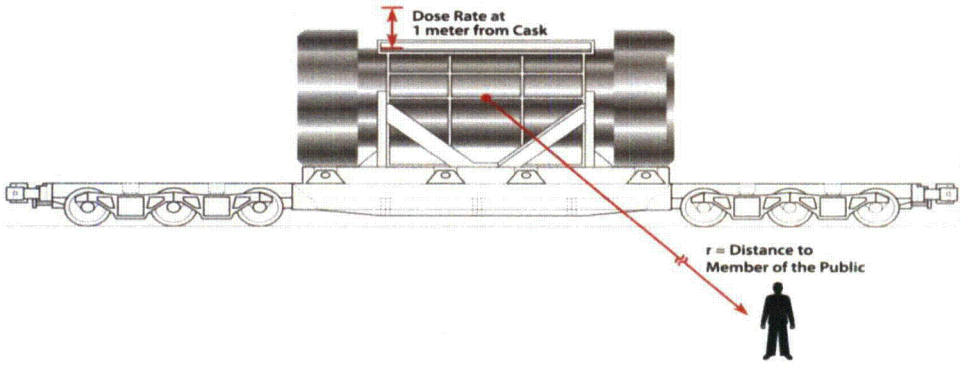

Figure VI-1. Model of a spent fuel cask in routine, incident-free transportation and radiation dose to a member of the public. Relative sizes of the cask and member of the public are approximately to scale.

The external radiation from the spent fuel cask results in a very small dose to each member of the public along the route traveled by the cask. The collective dose from routine transportation is the sum of all of these doses. For this study, several example transportation routes were examined. These routes were selected as being representative of possible cross-country transport. No actual spent fuel transport has occurred, or is planned to occur, on the routes shown. Table PS-1 and Figure PS-2 show the possible total dose in person-sieverts (person-Sv) to all of the would-be exposed workers and members of the public for one of these routes, the truck shipment from the Maine Yankee Nuclear Power Plant to Oak Ridge National Laboratory (ORNL). The background radiation dose to exposed workers and members of the public during the time of the shipment is included in Table VI-1 and Figure VI-2.

Table VI-1. Collective dose from routine transport for the truck route from Maine Yankee Nuclear Power Plant to Oak Ridge National Laboratory (person-Sv)

Exposed Population	Rural	Suburban	Urban	Urban Rush Hour	Total
Residents near route	5.0×10^{-6}	8.9×10^{-5}	2.0×10^{-6}	4.5×10^{-7}	9.6×10^{-5}
Traffic on the route	1.3×10^{-4}	2.4×10^{-4}	5.4×10^{-5}	5.0×10^{-6}	4.2×10^{-4}
Residents near truck stops	5.6×10^{-7}	1.2×10^{-5}	*	*	1.2×10^{-5}
Truck Crew	5.9×10^{-4}		7.6×10^{-5}		6.7×10^{-4}
Escort	4.7×10^{-8}		4.3×10^{-9}		5.1×10^{-8}
Inspectors (10 inspections)					1.2×10^{-3}
People at truck stops					4.4×10^{-4}
Truck stop workers					1.3×10^{-5}
	Total Dose from Spent Fuel Shipment				2.9×10^{-3}
Background					7.56

*Most truck stops are located in rural or suburban areas.

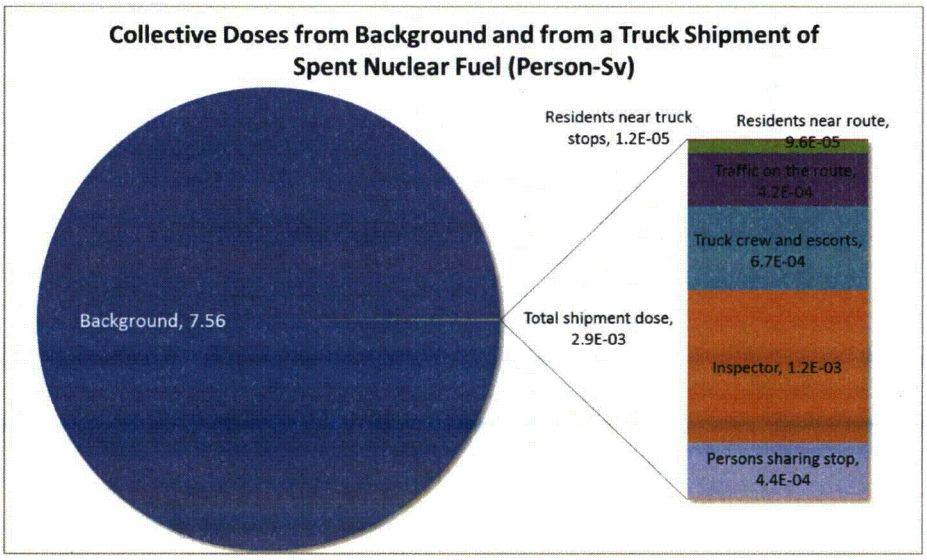

Figure VI-2. Collective doses from background and from a truck shipment of spent nuclear fuel (person-Sv).

The collective doses calculated for routine transportation are higher for this study than for either NUREG/CR-6672 or NUREG 0170 (Sprung et al., 2000). Figure VI-3 shows a comparison of the collective doses from truck transportation from the three studies. In NUREG 0170, the analysis was for a single route, in NUREG/CR-6672, the analysis was for 200 representative routes (Sprung et al., 2000), and in this study the analysis is for 16 truck routes (also for 16 rail routes). The collective average dose in the present study is larger than the NUREG/CR-6672 result because present populations are generally larger, particularly along rural routes, the number of vehicles sharing the highways with the spent fuel transport is now much larger (see Chapter 2), and the number and length of refueling stops is much greater. These increases were somewhat offset by the greater vehicle speeds used in the present study.

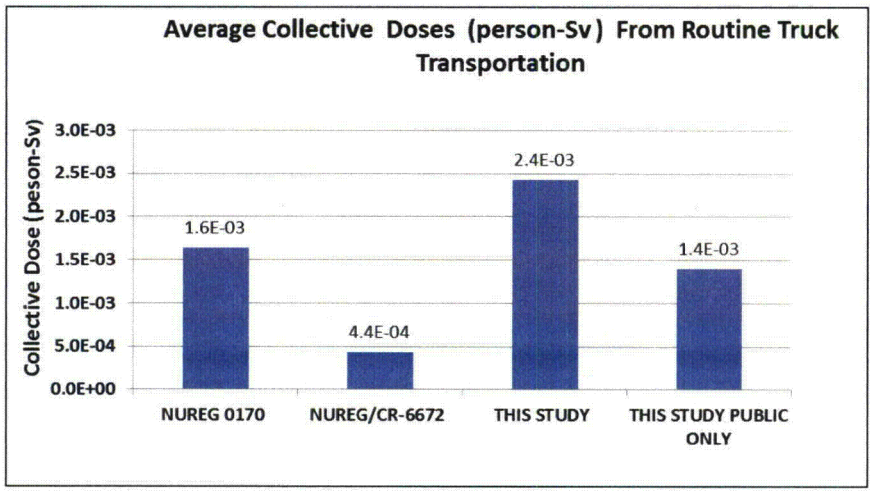

Figure VI-3. Collective doses (person-Sv) from routine truck transportation.

This study uses current (1991 to 2007) truck and rail accident statistics to determine the probability of an accident and the severity of that accident. Detailed analyses are performed to evaluate how the casks would respond to the accident scenarios. Figure VI-4 shows a cask response to one impact scenario, a 97 kilometer per hour (kph), or 60 mile per hour (mph) corner impact onto a rigid target, and the resulting deformations. Almost all of the deformation is in the impact limiter, a device that is added to the cask to absorb energy, much like the bumper of a car. Similar analyses were performed for impacts at 48, 97,145, and 193 kph—equal to 30, 60, 90, and 120 mph—in end-on (lid down), corner, and side-on orientations for two cask designs. These impact speeds encompass all accidents for truck and rail transportation.

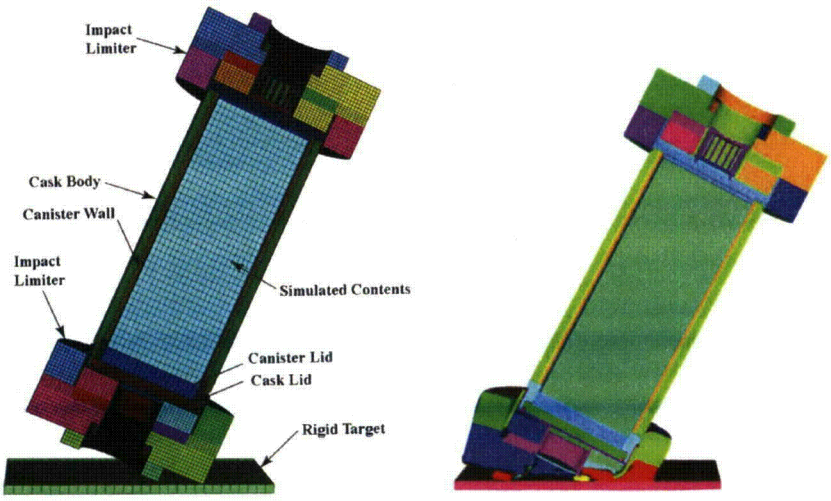

Figure VI-4. Corner impact onto a rigid target at 97 kph (60 mph) accident scenario for a spent fuel cask and the deformations produced by the impact.

Figure VI-5 shows one fire scenario, a three-hour engulfing fire, and the resulting temperature distribution in the cask. Additional simulations were performed with the fire offset from the cask. These fires include all fire-related accidents in rail transportation. The longest duration for an engulfing fire during truck transportation is one hour, due to the amount of fuel that is carried on board a tanker truck.

The detailed impact simulations were performed for two spent fuel casks that are intended for transportation by railroad, the NAC-STC and the HI-STAR 100. In addition, the results for a third cask, the GA-4, which is intended for transportation by truck, are inferred from earlier analyses. Detailed fire simulations were performed for all three casks.

Figure VI-5. Engulfing fire scenario and the temperature contours in the rail cask following a three-hour fire duration. The transparency of the flames has been increased so the cask can be seen. In the actual fire simulation, and in a real fire, the flames are opaque.

The impact and thermal analysis results indicate that no accident involving the truck transportation cask would result in release of radioactive material or reduction in the effectiveness of the gamma shielding. The only radiological consequence of an accident would be exposure to external radiation from the cask because of the long duration stop associated with the accident. The stop needs to be long enough for responders to clear the accident scene and to arrange for shipment resumption. During this stop emergency responders could be fairly close to the cask. Because there is no loss in effectiveness of the gamma shielding, the radiation dose to these responders would be a small fraction of the allowed occupational dose.

For rail transport of spent fuel that is in an inner welded canister, this study shows that there would be no release of radioactive material. For casks using lead gamma shielding, the most severe accidents evaluated led to reduction in the effectiveness of that shielding, which resulting in an elevated external radiation level. In addition, for rail transport of spent fuel that is not in an inner welded canister, some radioactive material is released following exceptionally severe and improbable accidents.

The calculated collective dose risk from accidents has decreased with each successive risk assessment. Figure VI-6 shows a comparison of average collective doses from releases and loss of lead shielding from the three studies (NUREG 0170 did not calculate loss of lead shielding (LOS)). This study also considered accident doses from a source that was not analyzed in the prior studies, the dose that results from accidents in which there is neither release nor loss of lead shielding, but there is increased exposure to a cask that is stopped for an extended period of time.

Average collective doses for this scenario for the three casks studied are shown in Figure VI-7. This scenario is important because more than 99.999 percent of all accident scenarios do not lead to either release of radioactive material or loss of shielding.

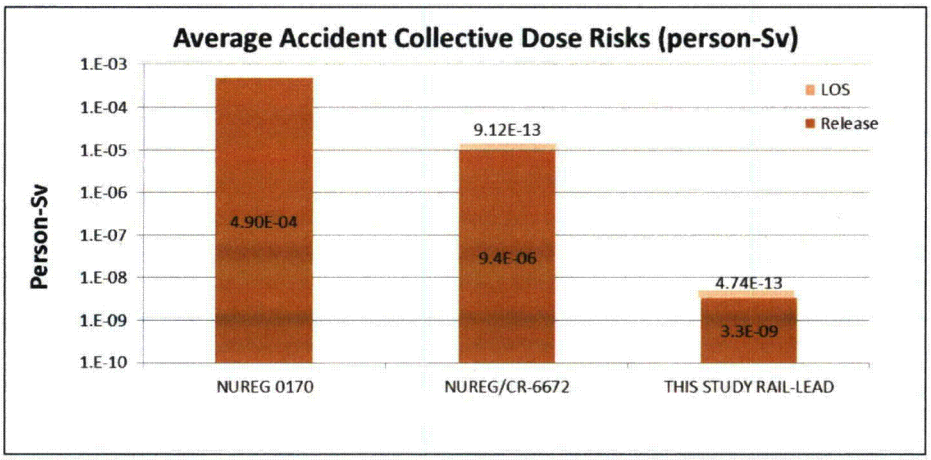

Figure VI-6. Accident collective dose risks from release and LOS accidents. The LOS bars are not to scale.

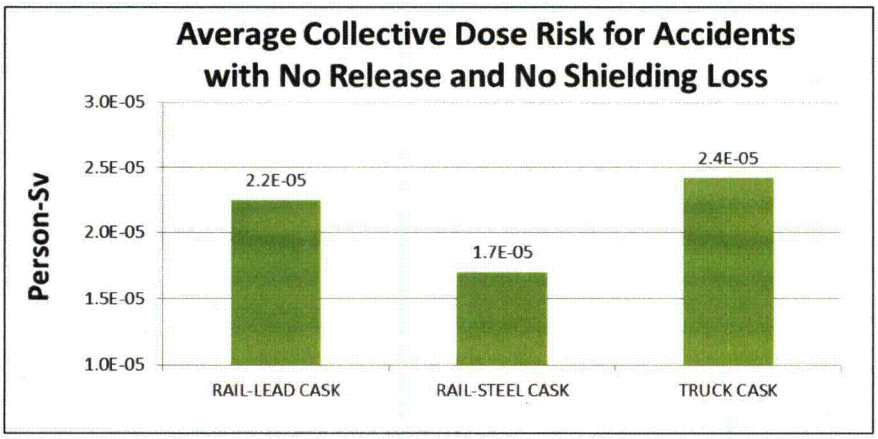

Figure VI-7. Average collective dose from accidents that have no impact on the cargo.

A final point of comparison between the studies is the maximum consequence of an accident. For NUREG-0170 this was about 110 person-Sv, for NUREG/CR-6672 it was about 9000 person-Sv, and for this study it is 2.2 person-Sv. The reduction in consequence is the result of using the

actual spent fuel being shipped, a smaller release fraction, and improvements in the RADTRAN model. This study also includes an estimate of the maximally exposed individual (a theoretical person located at the point of highest concentration of potentially released radioactive material for 10 hours) dose of 1.6 Sv, about the same dose that is received in a single radiotherapy session by a cancer patient.

As noted above, the purpose of this analysis was to reproduce (and, in some cases, extend) risk analyses previously considered in NUREG 0170, the Modal Study, and NUREG/CR-6672, using updated models and methods. The following findings are reached from this study:

- The collective dose risks from routine transportation are vanishingly small. Theses doses are about four to five orders of magnitude less than collective background radiation dose.
- The routes selected for this study adequately represent the routes for spent nuclear fuel transport, and there was relatively little variation in the risks per kilometer over these routes.
- Radioactive material would not be released in an accident if the fuel is contained in an inner welded canister inside the cask.
- Only rail casks without inner welded canisters would release radioactive material, and only then in exceptionally severe accidents.
- If there were an accident during a spent fuel shipment, there is only about one in a billion chance the accident would result in a release of radioactive material.
- If there were a release of radioactive material in a spent fuel shipment accident, the dose to the maximum exposed individual would be less than 2 Sv, about the dose given in a single radiotherapy treatment to cancer patients.
- The collective dose risks for the two types of extra-regulatory accidents (accidents involving a release of radioactive material and loss of lead shielding accidents) are negligible compared to the risk from a no-release, no-loss of shielding accident.
- The risk of loss of shielding from a fire is negligible.
- None of the fire accidents investigated in this study resulted in a release of radioactive material.

Based on these findings, this study reconfirms that radiological impacts from spent fuel transportation conducted in compliance with NRC regulations are low. In fact this study's radiological impact estimates are generally less than the already low estimates reported in earlier studies. Accordingly, with respect to spent fuel transportation, the previous NRC conclusion that the regulations for transportation of radioactive material are adequate to protect the public against unreasonable risk is also reconfirmed by this study.