APPENDIX II

DETAILS OF RISK ANALYSIS OF ROUTINE, INCIDENT-FREE TRANSPORTATION

I-8

TABLE OF CONTENTS

List of Figures....199

List of Tables....199

II.1 Introduction....201

II.2 The RADTRAN Model of Routine Transportation....201
- II.2.1 Description of the RADTRAN program....201
- II.2.2 The RADTRAN Software....205

II.3 RADTRAN Input Parameters....206
- II.3.1 Vehicle-specific Input Parameters....206
- II.3.2 Route-Specific Input Parameters....207
- II.3.3. Other parameters....208

II.4. Routes....209

II.5 Results....212
- II.5.1 Maximally exposed resident in-transit dose....212
- II.5.2 Unit risk: rail routes....212
- II.5.3 Unit risk: truck routes....213
- II.5.4 Doses along selected routes....214
  - II.5.4.1 Collective doses to receptors along the route....214
  - II.5.4.2 Doses to occupants of vehicles sharing the route....225
  - II.5.4.3 Doses from stopped vehicles....232
  - II.5.4.4 Occupational Doses....236

II.6 Interpretation of Collective Dose....236

List of Figures

Figure II- 1. RADTRAN model of the vehicle in routine, incident-free transportation 202
Figure II-2. Diagram of a truck route as modeled in RADTRAN. 204
Figure II-3. Diagram of truck stop model 205
Figure II-4. RADCAT vehicle screen. 206
Figure II-5. WebTRAGIS map of truck routes from INL. 212

List of Tables

Comment [JRC1]: Check font size

Table II-1. Vehicle-specific parameters 207
Table II-2. Route parameters for unit risk calculation (USDOT 2004a, b) 208
Table II-3. Parameter values in the RADTRAN 6 analysis 209
Table II-4. Specific routes modeled 210
Table II-5. Population multipliers 211
Table II-6 Maximum individual doses 212
Table II-7. Average doses to various receptors, rail routes. 213
Table II-8. Average doses to various receptors, truck routes. 213
Table II-9. Collective doses (person-μSv) from rail transportation; shipment origin INL 215
Table II-11. Collective doses (person-Sv) rail transportation; shipment origin Kewaunee 217
Table II-12. Collective doses (person-Sv) from rail transportation; shipment origin Maine Yankee -- continued 219
Table II-13. Collective doses (person-Sv) from truck transportation (Truck-DU); shipment origin Maine Yankee 220
Table II-13. Collective doses (person-Sv) from truck transportation (Truck-DU); shipment origin Maine Yankee -- continued 221
Table II-14 Collective doses (person-Sv) from truck transportation (Truck-DU); shipment origin Indian Point. 222
Table II-15. Collective doses (person-μSv) from truck transportation (Truck-DU); shipment origin INL 223
Table II-16. Collective doses (person-μSv) from truck transportation (Truck-DU); shipment origin Kewaunee. 224
Table II-17. Collective doses (person-Sv) to occupants of trains sharing the route. 226
Table II-18. States comprising the ten EPA regions 226
Table II-19. Collective doses (person-Sv) from truck transportation (Truck-DU); shipment origin Maine Yankee 228
Table II-19. Collective doses (person-Sv) from truck transportation (Truck-DU); shipment origin Maine Yankee -- continued 229
Table II-20. Collective doses (person-Sv) from truck transportation (Truck-DU); shipment origin Indian Point. 230
Table II-21. Collective doses (person-Sv) from truck transportation (Truck-DU); shipment origin INL 231
Table II-22. Collective doses (person-Sv) from truck transportation (Truck-DU); shipment origin Kewaunee. 232
Table II-23. Example of rail stops on the Maine Yankee-to-Hanford rail route 233
Table II-23. Doses at rail stops on the Maine Yankee-to-Hanford rail route 234

Table II-24 Collective doses to residents near truck stops 235
Table II-25 summarizes the occupational doses. 236
Table II-25. Occupational doses per shipment from routine incident-free transportation.....236

APPENDIX II

DETAILS OF RISK ANALYSIS OF ROUTINE, INCIDENT-FREE TRANSPORTATION

II.1 Introduction

NUREG-0170 (NRC, 1977) documented estimates of the radiological consequences and risks associated with the shipment by truck, train, plane, or barge of about 25 different radioactive materials, including power reactor spent fuel. The estimates were calculated using Version 1 of the RADTRAN code (Taylor and Daniel, 1977), which was developed for the NRC by Sandia National Laboratories specifically to support the conduct of the NUREG-0170 study. RADTRAN Version 6, integrated with the input file generator RADCAT, (Neuhauser, et al[1], 2000; Weiner, et al, 2009) is the computational tool used in this study.

Comment [JRC2]: Check, but I don't think "the" is used.

The basic risk assessment method employed in the RADTRAN code is widely accepted. Changes to the code are tracked by a software quality assurance plan that is consistent with American National Standards Institute guidelines. The incident-free module of an earlier version of RADTRAN, RADTRAN 5.25, was validated by measurement (Steinman, et al, 2002); this module is the same in RADTRAN 6.0, the version used in the current study. Verification and validation of RADTRAN 6.0 are documented in Dennis, et al (2008).

II.2 The RADTRAN Model of Routine Transportation

II.2.1 Description of the RADTRAN program

RADTRAN calculates the radiological consequences and risks associated with the shipment of a specific radioactive material in a specific package along a specific route. Shipments that take place without the occurrence of accidents are routine, incident free shipments, and the radiation doses to various receptors are called "incident-free doses." Since the probability of routine, incident-free shipment is essentially equal to one, RADTRAN calculates a dose rather than a risk for such shipments. The dose from a routine shipment is based on the external dose from the part of the vehicle carrying the radioactive cargo, referred to as the "vehicle" in this discussion of RADTRAN. Doses to receptors from the external radiation from the vehicle depend on the distance between the receptor and the radioactive cargo being transported and the exposure time. Exposure time is the length of time the receptor is exposed to external emissions from the radioactive cargo. The doses in routine transportation depend only on the external dose rate from the cargo and not on the radioactive inventory of the cargo.

Comment [JRC3]: Does RADTRAN calculate "incident-free doses", even for those shipments that are not incident free, i.e., the incident free portion of shipments during which an accident occurs?

Comment [JRC4]: The inventory generates the dose rate?

RADTRAN 6.0, integrated with the input file generator RADCAT, (Neuhauser, et al, 2000; Weiner, et al, 2009) is the version used in this study. The incident-free module of RADTRAN, the model used for the analysis in this chapter, was validated by measurement (Steinman, et al, 2002), and verification and validation of RADTRAN 6.0 are documented in Dennis, et al (2008).

Comment [JRC5]: This sentence is a duplicate (see top of page).

Comment [JRC6]: Another near repeat from above.

[1] Neuhauser, et al (2000) is the technical manual for RADTRAN 5, and is cited because the basic equations for the incident-free analyses in RADTRAN 6 are the same as those in RADTRAN 5 and the technical manual for RADTRAN 6 is not yet available.

RADTRAN models the vehicle as a spherical radiation source traveling along the route. The source strength is the transport index (TI), one percent of the dose rate in mSv/hour[2] at 1 m from the cask. which is treated as an isotropically radiating virtual source at the center of the sphere, as shown in Figure II-1.

Comment [JRC7]: Misspelling in footnote. Spell check entire document.

Comment [JRC8]: Can you manage a semi-transparent shaded sphere?

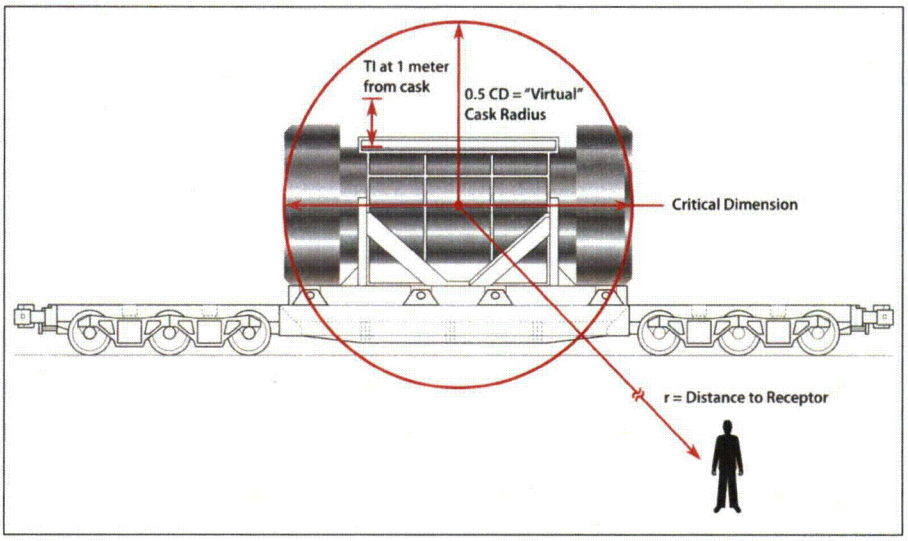

Figure II- 1. RADTRAN model of the vehicle in routine, incident-free transportation

When the distance to the receptor r is much larger than the critical dimension, RADTRAN models the dose to the receptor as proportional to $1/r^2$. When the distance to the receptor r is similar to or less than the critical dimension, as for crew or first responders, RADTRAN models the dose to the receptor as proportional to $1/r$. The TIs for the Rail-Pb and the Rail-Steel casks, were calculated from the dose rates at 2 meters as reported in the Safety Analysis Reports of these casks (Holtec International, 2004, NAC international, 2004) and are shown in Table II.3-1.

Comment [JRC9]: Lead is only 2 letters longer.

The basic equation for calculating incident-free doses to a population along a transportation route is Equation II-1:

$$D(x) = \frac{Qk_0 DR_v}{V} \int_{-\infty}^{\infty} \int_{x\min}^{x\max} \left\{ \frac{(\exp(-\mu r))(B(r))}{r\sqrt{r^2 - x^2}} \right\} dx dr \qquad \text{(II-1)}$$

where x is the distance between the receptor and the source, perpendicular to the route

[2] One mSv = 100 mrem. Thus, 1% of the doe rate in mSv at one meter from the package is equivakent to the dose rate in mrem.hr.

Formatted: Font: 10 pt, Highlight

Q includes factors that correct for unit differences
k_0 is the package shape factor
DR_v is the vehicle external dose rate: the TI
V is the vehicle speed
μ is the radiation attenuation factor
B is the radiation buildup factor
r is the distance between the receptor and the source along the route

Details of the application of this and similar equations may be found in Neuhauser et al (2000).

External radiation from casks carrying used nuclear fuel includes both gamma and neutron radiation. For calculating doses from gamma radiation, RADTRAN uses Equation II-2,

(II.2) $$(e^{-\mu r}) * B(r) = 1$$

for conservatism. For calculating doses from neutron radiation, RADTRAN uses Equation II-3

(II-3) $$(e^{-\mu r}) * B(r) = (e^{-\mu r}) * (1 + a_1 r + a_2 r^2 + a_3 r^3 + a_4 r^4)$$

where the coefficients are characteristics of the material. The default coefficients in RADTRAN are those for steel.

Collective (population) doses are calculated by integrating over the band along the route where the population resides (the x integration in Equation II-1) and then integrating along the route from minus to plus infinity ($-\infty$ to ∞) along the route (the r integration in Equation II-1). This is illustrated for a truck route in Figure II-2. The x integration limits in Figure II-2 are not to scale: *xmin* is usually 30 m. and *xmax* is usually 800 m. Integration of x to distances greater than 800 results in risks not significantly different from integration to 800 meters, since the decrease in dose with distance is exponential.

Comment [JRC10]: How so?

Comment [JRC11]: Implies not conservative?

Deleted: on the other hand,

Comment [JRC12]: That are modified in the case of a lead-shielded cask?

Comment [JRC13]: An Figure for this band as applied to a rail right-of-way and an Interstate would be useful.

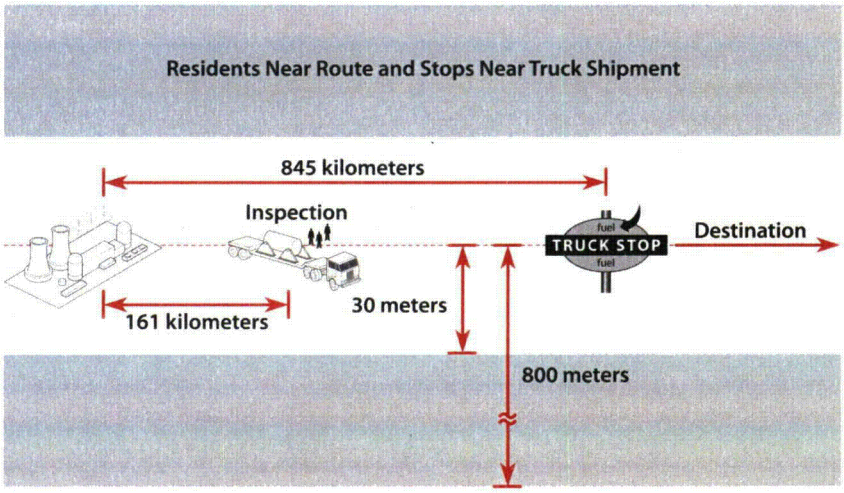

Figure II-2. Diagram of a truck route as modeled in RADTRAN; 845 km is the average distance a very large truck travels on half of its fuel capacity. The 161 km (100 miles) is the distance between spent fuel shipment inspections required by regulation (DOE, 2002).

Comment [JRC14]: CFR citation?

Variants of Equation II-1 are used to calculate doses to members of the public at stops, to vehicle crew members and other workers, to occupants of vehicles that share the route with the vehicle carrying the radioactive cargo, and to any other receptor identified. Figure II-3 is a diagram of the model used to calculate doses at truck stops. The inner circle defines the area occupied by people who are between the spent fuel truck and the building, and who are not shielded from the truck's external radiation. The dimensions of this circle and the average number of people who occupy it, along with the method used to determine these, are found in Griego et al (1996).

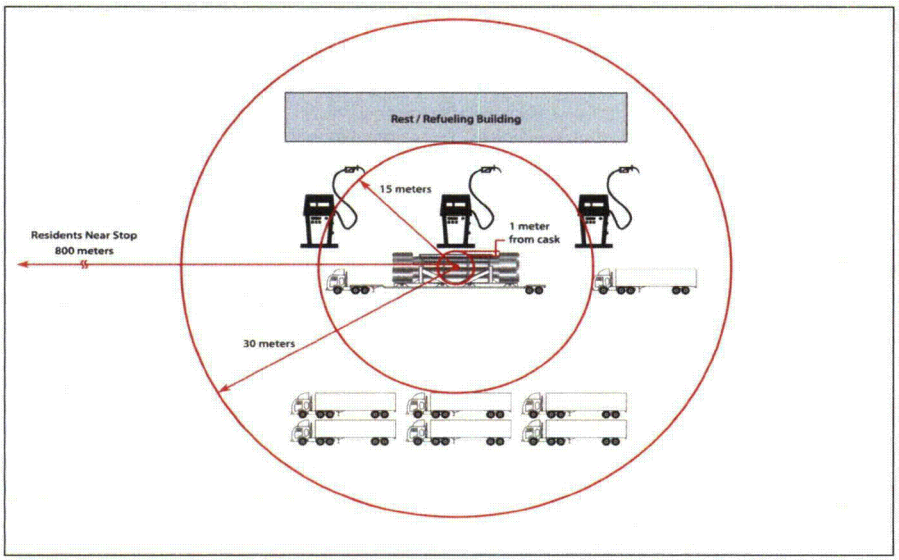

Figure II-3. Diagram of truck stop model

II.2.2 The RADTRAN Software

This section is a brief description of the RADTRAN software program. A full description of the software and how to use it may be found in the RADCAT User Guide (Weiner, et al, 2009).

The equations that RADTRAN uses, variants of Equation II-1, are programmed in FORTRAN 95. RADTRAN reads in

- an input text file that contains the input parameters as defined by the RADTRAN user,
- a text file that contains an internal library of 148 radionuclides with their associated dose conversion factors and half-lives,
- a binary file that contains the societal ingestion doses for one curie of each radionuclide in the internal radionuclide library,
- dilution factors and isopleths areas for several weather patterns.

Only the first of these is used in calculating doses from incident-free transportation; the other three are used in the accident analysis and will be discussed in Appendix V.

The input text file can be written directly using a text editor, or can be constructed using the input file generator RADCAT. RADCAT, programmed in XML and running under Java Webstart, provides a series of screens that guide the user in entering values for RADTRAN input parameters. Figure II-4 shows a RADCAT screen.

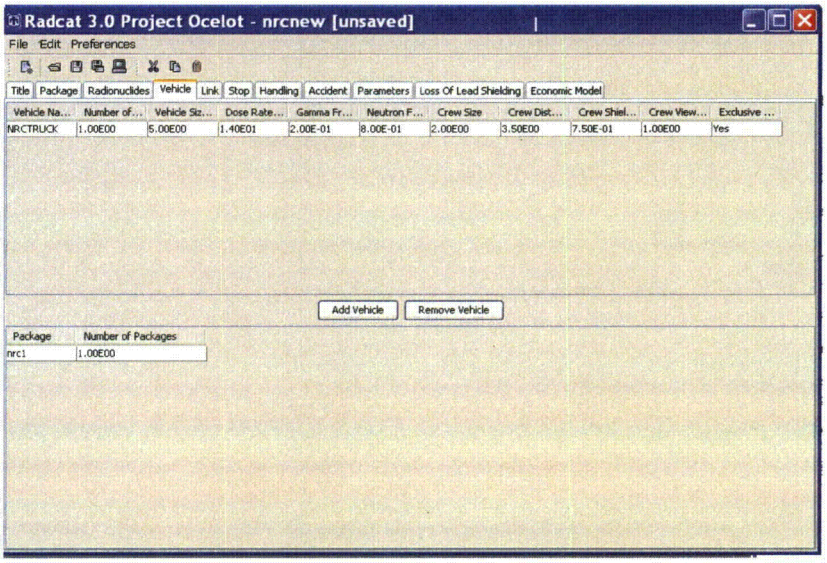

Figure II-4. RADCAT vehicle screen.

RADTRAN output is a text file that can be saved as text or as a spreadsheet.

II.3 RADTRAN Input Parameters

II.3.1 Vehicle-specific Input Parameters

RADTRAN does not allow for the offset of the package from the trailer edge, so the physical dimensions of the package are considered the physical dimensions of the vehicle. Table II-1 shows the vehicle-specific input parameters to RADTRAN and shows the parameter values used in this analysis. The Rail-Steel is modeled transporting canistered fuel; the Rail-Steel-Pb is modeled transporting uncanistered fuel. The Truck-DU is a truck cask. In this analysis, the Truck-DU is assumed to be transported by truck; the Rail-Steel-Pb and the Rail-Steel, by rail.

Deleted: ; the other two are rail casks

Table II-1. Vehicle-specific parameters

	Truck-DU	Rail-Steel-Pb	Rail-Steel
Transportation mode	highway	rail	Rail
Length (critical dimension)	5.94 m	4.90m	5.08 m
Diameter ("crew view")	2.29 m	2.5 m	3.2 m
Distance from cargo to crew cab	3.5 m	150 m	150 m minimum
TI	14	14.02	10.34
Gamma fraction	0.77	0.89	0.90
Neutron fraction	0.23	0.11	0.10
Number of packages per vehicle	1 per truck	1 per railcar	1 per railcar
Number of crew	2	3	3
Exclusive use?	yes	NA	NA
Dedicated rail	NA	no	No
17 x 17 PWR assemblies	4	26	24

Comment [JRC15]: What is this?

Comment [JRC16]: This distance is from the center of the cargo?

Comment [JRC17]: Provide explanation when term is first used.

Comment [JRC18]: Provide explanation when term is first used.

II.3.2 Route-Specific Input Parameters

Route-specific input parameters are shown in Table II-2 for a unit risk calculation. These are the common input parameters for the sixteen specific routes analyzed. The vehicle density for rail assumes that only one car of a freight train carries a spent fuel cask.

Comment [JRC19]: Provide explanation when term is first used.

Deleted: he

Deleted: ,

Comment [JRC20]: Correct?

Table II-2. Route parameters for unit risk calculation (USDOT 2004a, b)

Parameter	Interstate Highway	Freight Rail
Vehicle speed (U.S. average kph)		
Rural	108	40.4
Suburban	102	40.4
Urban	97	24
Vehicle density (U.S. average vehicles/hr)		
Rural	1119	17[a]
Suburban	2464	17
Urban	5384	17
Persons per vehicle	1.5	2
Farm fraction	0.5	0.5
Stops		
Minimum distance from nearby residents (m)	30	200
Maximum distance from nearby residents (m)	800	800
Stop time for classification (hours)	NA	27
Stop time in transit for railroad change (hours)	NA	0.5
Stop time for truck inspections (hours)	0.75	NA
Stop time at truck stops (hours)	0.83	NA
Average number of people sharing the stop	6.9[b]	NA
Minimum distance to people sharing the stop (m)	1[b]	NA
Maximum distance to people sharing the stop (m)	15[b]	NA
Truck stop worker distance from cask (m)	15	NA
Truck stop worker shielding factor	0.018	NA
Truck crew shielding factor (no regulatory limit)[c]	0.377	NA
Escort distance from cask (m)	4	16

[a]Railcars per hr [b]Griego et al, 1996. [c] From crew doses with and without the regulatory limit.

II.3.3. Other parameters

RADTRAN includes a set of parameters whose values are not generally known by the user and which have been used routinely in transportation risk assessments. RADTRAN contains default values for these parameters, but all default values can be changed by the user. Table II-3 lists the parameter values used in the incident-free analysis.

Table II-3. Parameter values in the RADTRAN 6 analysis

Parameter	Value
Shielding factor for residents (fraction of energy impacting the receptor): R= rural, S=suburban, U=urban	R=1.0
	S=0.87
	U=0.018
Fraction of outside air in urban buildings	0.25
Fraction of urban population on sidewalk	0.48
Fraction of urban population in buildings	0.52
Ratio of non-residents to residents in urban areas	6
Distance from in-transit shipment for maximum exposure in m. (RMEI exposure)	30
Vehicle speed for maximum exposure in km/hr. (RMEI exposure)	24
Distance from in-transit shipment to nearest resident in rural and suburban areas, m	30
Distance from in-transit shipment to nearest resident in urban areas, m	27
Population bandwidth m	800
Distance between vehicles (trains), m	3.0
Minimum number of rail classification stops	1

Additional input parameters are rural, suburban, and urban route lengths and population densities, characteristics of stops along a route and the TI of the package.

II.4. Routes

This study analyzes both the per-km doses from a single shipment on rural, suburban, and urban route segments and doses to receptors from a single shipment on 16 representative routes, chosen to represent a range of route lengths and a variety of populations. The actual truck and rail routes were selected for a number of reasons. The combination of four origins and four destinations represent a variety of route lengths and population densities and both private and government facilities, a large number of states, and includes origins and destinations that were included in the analyses of NUREG/CR-6672.

Power reactor spent fuel (SNF) and high-level radioactive waste (HLW) are currently stored at 77 locations in the U.S.(67 nuclear generating plants, five storage facilities at sites of decommissioned nuclear plants, and five DOE defense facilities). The origin sites (Table II-1) include two nuclear generating plants (Indian Point and Kewaunee) a storage site (Maine Yankee) and a National Laboratory (Idaho National Laboratory). The destination sites include the two proposed repository sites not characterized (Deaf Smith County, TX and Hanford, WA) (DOE, 1986), the site of the proposed Private Fuel Storage facility (Skull Valley, UT), and a National Laboratory site (Oak Ridge, TN). The routes modeled are shown in Table II-4. Both truck and rail versions of each route are analyzed.

Table II-4. Specific routes modeled

Origin	Destination
Maine Yankee site, ME	Hanford, WA
	Deaf Smith County, TX
	Skull Valley, UT
	Oak Ridge, TN
Kewaunee NP, WI	Hanford, WA
	Deaf Smith County, TX
	Skull Valley, UT
	Oak Ridge, TN
Indian Point NP, NY	Hanford, WA
	Deaf Smith County, TX
	Skull Valley, UT
	Oak Ridge, TN
Idaho National Lab, ID	Hanford, WA
	Deaf Smith County, TX
	Skull Valley, UT
	Oak Ridge, TN

Route segments and population densities are provided by WebTRAGIS (Johnson and Michelhaugh (2003). WebTRAGIS uses census data from the 2000 census. Updated population data to 2006 were provided in the 2008 Statistical Abstract (U.S. Census Bureau 2008). Table 13 of U.S. Census Bureau (2008) shows the percent increase in population for each of the 50 states of the United States, as well as for the U. S. as a whole, and Table 21 shows the percent increase in population for the 50 largest metropolitan areas in the U.S. Data from these two tables were combined to give population multipliers for states along routes for which the collective dose and the population increase were significant enough to make a correction.

The population multipliers used are shown in Table II-5. "Significant" was taken to mean that the population difference was more than 1% (i.e., multipliers between 0.99 and 1.01 were not considered significant). The state-specific multiplier was applied to rural and suburban routes through the state, and the multiplier for the largest metropolitan area in that state was applied to the urban routes. The U.S. multiplier was applied to ingestion doses.

Comment [JRC21]: Range is not clear?

Comment [JRC22]: This is not a factor in incident-free analysis?

Table II-5. Population multipliers

State	Rural, Suburban, Urban Designation	Population Multiplier	State	Rural, Suburban, Urban Designation	Population Multiplier
Arizona	Rural, Suburban	1.202	Nevada	Rural, Suburban	1.249
	Urban	1.242		Urban	1.292
Arkansas	Rural, Suburban	1.051	New Mexico	Rural, Suburban	1.075
	Urban	1.051		Urban	1.075
California	Rural, Suburban	1.076	Oklahoma	Rural, Suburban	1.037
	Urban	1.15		Urban	1.07
Colorado	Rural, Suburban	1.105	Pennsylvania	Rural, Suburban	1.013
	Urban	1.105		Urban	1.025
Georgia	Rural, Suburban	1.144	Oregon	Rural, Suburban	1.082
	Urban	1.21		Urban	1.109
Idaho	Rural, Suburban	1.133	Tennessee	Rural, Suburban	1.061
	Urban	1.133		Urban	1.109
Illinois	Rural, Suburban	1.033	Texas	Rural, Suburban	1.127
	Urban	0.959		Urban	1.175
Maryland	Rural, Suburban	1.037	Utah	Rural, Suburban	1.142
	Urban	1.041		Urban	1.102
Missouri	Rural, Suburban	1.044	Virginia	Rural, Suburban	1.08
	Urban	1.044		Urban	1.103

Parameters like population density and route segment lengths, that are specific to each route, were developed using WebTRAGIS. Figure II-5 is a WebTRAGIS output map showing highway routes from Idaho National Laboratory (INL) to the four destinations in Table II-4.

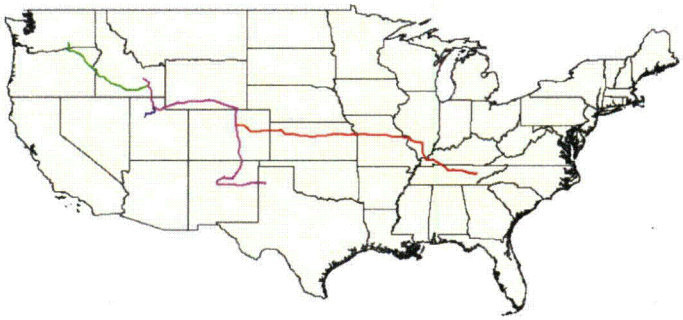

Figure II-5. WebTRAGIS map of truck routes from INL.

Comment [JRC23]: Unlabeled? Useful?

II.5 Results

II.5.1 Maximally exposed resident in-transit dose

The largest dose from a moving vehicle to an individual member of the public is sustained when that individual is 30 meters (a conservative estimate of the interstate right-of-way) from the moving vehicle, and the vehicle is moving at the slowest speed it would be likely to maintain. This speed is 24 kph (16 mph) for both rail and truck. Table II-6 shows the maximum individual dose, in Sv, for each package. These doses are directly proportional to the external dose rate (TI) of each package. For comparison, a single dental x-ray delivers a dose of 4×10^{-5} Sv (Stabin, 2009), about 7000 times the doses shown in Table II-6.

Table II-6 Maximum individual doses.

Package	Dose in Sv
Rail-Steel-Pb (rail)	5.7×10^{-9}
Rail-Steel (rail)	4.3×10^{-9}
Truck-DU (truck)	6.7×10^{-9}

II.5.2 Unit risk: rail routes

The doses to railyard workers along the route, to residents and others along the route, and to occupants of vehicles that share the route from a single shipment (one rail cask) traveling one km past a population density of one person/km^2 are shown in Table II-7. The dose units are person-Sv. The doses are calculated assuming one cask on a train, because railcar-km is the unit usually used to

Comment [JRC24]: Just crew?

Deleted:

describe freight rail transport. The data in this table may be used to calculate collective doses along routesas follows:

- Multiply the railyard crew dose by the kilometers of each type of route traveled. This is a conservatively calculated dose that assumes that the railyard crew receives 1.8 percent of the classification yard dose, per km of travel, when the train stops. The classification yard occupational collective dose (Wooden, 1980), assuming a 30-hour classification stop, is integrated into RADTRAN. The dose was adjusted to reflect the 27-hour stop (Table II-3) (DOT, 2004b).

- The area of the band occupied by the population along the route is equal to the kilometers traveled multiplied by, e.g., 1.6 for a band width of 800 m on each side of the route. Therefore, multiply the "population along route" dose by this area and the appropriate population density (obtained from a routing code like WebTRAGIS).

Table II-7. Average individual doses ("unit risks") to various receptors, rail routes. The units of the average dose to the residents near the yard, Sv-km^2/hour (mrem-km^2/hour), reflect the output of the RADTRAN stop model, which incorporates the area occupied.

Cask and route type	Resident along route, Sv	Resident near yard Sv-km^2/hour	Occupants of vehicles sharing the route person-Sv
Rail-Steel-Pb rural	7.3E-10	3.5E-07	6.5E-09
Rail-Steel-Pb suburban	6.3E-10	3.5E-07	6.5E-09
Rail-Steel-Pb urban	2.2E-10	3.5E-07	9.1E-08
Rail-Steel rural	5.6E-10	2.7E-07	4.9E-09
Rail-Steel suburban	4.8E-10	2.7E-07	4.9E-09
Rail-Steel urban	1.7E-11	2.7E-07	1.4E-08

II.5.3 Unit risk: truck routes

The doses to truck crew, residents and others along the route, and to occupants of vehicles that share the route from a single shipment (one truck cask) traveling one kilometer past a population density of one persom/km^2 are shown in Table II-8. The dose units are person-Sv. Rural, suburban, and urban doses to residents living near stops are calculated by multiplying the appropriate stop dose (truck stops are not typically located in urban areas) by the appropriate population density (obtained from a routing code like WebTRAGIS). The number of stops on each route segment is calculated by dividing the length of the route segment by 845 km (average distance between refueling stops for a large semi-detached trailer truck (DOE, 2002, Appendix J). The area of the band occupied by the population along the route is equal to the kilometers traveled multiplied by, e.g., 1.6 for a band width of 800 m on each side of the route the same as for rail routes described above.

Deleted:

Comment [JRC25]: Unclear.

Comment [JRC26]: Unclear.

Comment [JRC27]: These are dose-rate, not dose, units? Couldn't this be converted to Sv?

Deleted:

Comment [JRC28]: Individual dose in person-Sv seems odd.

Deleted: -

Table II-8. Average individual dose ("unit risk") to various receptors, truck routes.

	Resident near stops Sv-km²/hour	Resident along route Sv	Occupants of vehicles sharing route
Truck-DU rural	3.26E-06	3.1E-10	1.2E-07
Truck-DU suburban	2.84E-06	2.7E-10	2.7E-07
Truck-DU urban	N/A	5.2E-12	6.0E-07
Truck-DU urban rush hour	N/A	1.2E-12	5.5E-07
6.9 people sharing stop (person-rem)	2.3E-04	N/A	N/A

II.5.4 Doses along selected routes.

Doses to receptors along the routes shown in Table II-5 are presented below.

II.5.4.1 Collective doses to receptors along the route

Using route data from Web TRAGIS, collective doses from incident-free transportation were calculated. For rural and suburban route segments, collective doses calculated were doses sustained by the resident population. Non-resident populations were included with residents as receptors along the urban segments of the routes. Tables II-9 to II-12 show collective doses along rail routes and Tables II-13 to II-116, along highway routes. Blank cells in the tables indicate that no route miles or population was present in those cells.

Table II-9. Collective doses to residents along the route (person-Sv) from rail transportation; shipment origin INL

DESTINATION AND ROUTE	Rail-Pb			Rail-Steel		
	Rural	Suburban	Urban	Rural	Suburban	Urban
ORNL						
Colorado	2.1E-07	9.3E-07		1.6E-07	7.1E-07	
Idaho	2.8E-06	1.2E-05	5.5E-06	2.1E-06	9.3E-06	4.2E-07
Illinois	2.8E-06	2.7E-05	7.2E-06	2.8E-06	2.7E-05	5.5E-07
Indiana	2.7E-06	1.3E-05	2.9E-06	2.1E-06	1.0E-05	2.2E-07
Kansas	2.0E-06	1.1E-05	2.5E-06	1.6E-06	8.1E-06	1.9E-07
Kentucky	4.2E-06	3.4E-05	1.4E-05	3.2E-06	2.6E-05	1.0E-06
Missouri	3.8E-06	3.6E-05	1.8E-05	2.9E-06	2.7E-05	1.4E-06
Nebraska	5.6E-06	2.0E-05	5.6E-06	4.3E-06	1.5E-05	4.2E-07
Tennessee	2.0E-06	1.3E-05	6.7E-07	1.5E-06	9.6E-06	5.1E-08
Wyoming	2.3E-06	1.4E-05	3.3E-06	1.7E-06	1.1E-05	2.5E-07
DEAF SMITH						
Colorado	5.2E-06	6.6E-05	3.0E-05	2.7E-05	5.1E-05	2.1E-06
Idaho	2.8E-06	1.2E-05	6.0E-06	5.5E-06	9.3E-06	4.2E-07
Oklahoma	1.7E-07	2.9E-07	0.0E+00	1.3E-07	2.2E-07	0.0E+00
Texas	6.5E-07	5.4E-06	9.4E-07	5.0E-07	4.1E-06	7.1E-08
Wyoming	1.8E-06	9.6E-06	2.4E-06	2.4E-06	7.3E-06	1.8E-07
HANFORD						
Idaho	6.0E-06	2.6E-05	9.6E-06	9.6E-06	4.0E-06	7.3E-07
Oregon	2.3E-06	1.5E-05	3.5E-06	3.5E-06	1.5E-06	2.7E-07
Washington	1.9E-07	7.0E-06	4.2E-06	4.2E-06	1.2E-07	3.2E-07
SKULL VALLEY						
Idaho	2.3E-06	1.0E-05	5.3E-06	5.3E-06	1.5E-06	4.1E-07
Utah	2.6E-06	3.0E-05	1.8E-05	1.8E-05	2.3E-05	1.4E-06

Comment [JRC29]: For all result tables: Why are there no route totals?

Comment [JRC30]: How does this differ from no entry at top of this column.

Table II-10. Collective doses to residents along the route (person-Sv), rail transportation, shipment origin Indian Point

DESTINATION	Rail-Steel-Pb			Rail-Steel		
	Rural	Suburban	Urban	Rural	Suburban	Urban
ORNL						
Delaware	2.0E-08	1.2E-05	1.3E-05	1.5E-08	8.9E-06	1.0E-06
Washington DC	5.1E-09	1.4E-06	7.3E-06	3.9E-09	1.1E-06	5.5E-07
Maryland	1.1E-06	3.6E-05	3.2E-05	8.4E-07	2.7E-05	2.4E-06
New Jersey	6.5E-07	1.9E-05	2.2E-05	4.9E-07	1.5E-05	1.7E-06
New York	4.9E-08	2.6E-06	5.4E-05	3.7E-08	2.0E-06	4.1E-06
Pennsylvania	7.9E-08	1.4E-05	5.1E-05	6.0E-08	1.0E-05	3.9E-06
Tennessee	3.6E-06	4.9E-05	1.0E-05	2.7E-06	3.7E-05	8.0E-07
Virginia	6.5E-06	9.4E-05	3.9E-05	5.0E-06	7.2E-05	2.7E-06
DEAF SMITH						
Illinois	2.4E-06	4.3E-05	3.9E-05	1.8E-06	3.3E-05	2.9E-06
Indiana	3.3E-06	1.8E-05	8.6E-06	2.5E-06	1.4E-05	6.6E-07
Iowa	4.7E-07	1.0E-06	5.0E-07	3.6E-07	7.6E-07	3.8E-08
Kansas	3.2E-06	2.9E-05	1.3E-05	2.5E-06	2.2E-05	9.6E-07
Missouri	1.9E-06	1.1E-05	3.8E-06	1.5E-06	8.6E-06	2.9E-07
New York	8.7E-06	9.8E-05	7.9E-05	6.6E-06	7.4E-05	6.0E-06
Ohio	3.9E-06	5.1E-05	3.7E-05	3.0E-06	3.9E-05	2.8E-06
Oklahoma	7.2E-07	6.4E-06	8.3E-07	5.5E-07	4.9E-06	6.3E-08
Pennsylvania	6.6E-07	1.5E-05	7.8E-06	5.0E-07	4.4E-07	4.0E-07
Texas	1.2E-06	8.2E-06	2.0E-06	8.9E-07	6.2E-06	1.5E-07
HANFORD						
Idaho	1.6E-06	1.1E-05	1.5E-06	1.2E-06	1.0E-06	2.9E-07
Illinois	2.1E-06	3.2E-05	3.7E-05	1.6E-06	1.4E-06	8.6E-07
Indiana	3.4E-06	1.8E-05	8.6E-06	2.9E-06	2.2E-06	4.8E-07
Minnesota	5.1E-06	4.7E-05	1.9E-05	3.9E-06	3.4E-06	1.3E-06
Montana	0.0E+00	2.1E-05	2.2E-06	0.0E+00	0.0E+00	5.6E-07
New York	8.7E-06	9.8E-05	7.9E-05	6.6E-06	7.4E-05	6.0E-06
North Dakota	1.6E-06	1.3E-05	4.1E-06	1.2E-06	1.1E-06	3.5E-07
Ohio	3.9E-06	5.1E-05	3.7E-05	3.0E-06	3.9E-05	2.8E-06
Pennsylvania	6.6E-07	1.5E-05	7.8E-06	5.0E-07	4.4E-07	4.0E-07
Washington	1.8E-06	2.2E-05	1.0E-05	1.4E-06	1.2E-06	5.7E-07
Wisconsin	2.7E-06	1.3E-05	6.0E-06	2.0E-06	1.8E-06	3.5E-07
SKULL VALLEY						
Colorado	2.1E-07	9.3E-07	0.0E+00	1.6E-07	7.1E-07	0.0E+00
Illinois	2.1E-06	3.3E-05	4.3E-05	1.6E-06	2.5E-05	3.3E-06
Indiana	3.3E-06	1.8E-05	8.6E-06	2.5E-06	1.4E-05	6.6E-07
Iowa	6.4E-06	2.9E-05	5.5E-06	6.4E-06	2.9E-05	6.0E-06
Nebraska	6.7E-06	3.2E-05	9.9E-06	5.1E-06	2.4E-05	7.5E-07
New York	8.7E-06	9.8E-05	7.9E-05	6.6E-06	7.4E-05	6.0E-06
Ohio	3.9E-06	5.1E-05	3.7E-05	3.0E-06	3.9E-05	2.8E-06
Pennsylvania	6.6E-07	1.5E-05	7.8E-06	5.0E-07	4.4E-07	4.0E-07
Utah	2.0E-06	2.9E-05	1.8E-05	1.6E-06	1.4E-06	7.4E-07
Wyoming	2.2E-06	1.5E-05	3.7E-06	1.6E-06	1.4E-06	4.0E-07

Comment [JRC31]: No rural dose in Montana, but there is Suburban and Urban dose? Unclear.

Deleted: 0

Table II-11. Collective doses to residents along the route (person-Sv) rail transportation; shipment origin Kewaunee

DESTINATION AND ROUTES	Rail-Steel-Pb			Rail-Steel		
	Rural	Suburban	Urban	Rural	Suburban	Urban
ORNL						
Illinois	3.8E-07	3.3E-05	4.0E-05	2.9E-07	2.5E-05	3.0E-06
Indiana	3.3E-06	1.8E-05	8.6E-06	2.5E-06	1.4E-05	6.6E-07
Kentucky	5.1E-06	2.6E-05	1.1E-05	3.9E-06	2.0E-05	8.6E-07
Ohio	3.5E-06	4.8E-05	2.3E-05	2.6E-06	3.6E-05	1.7E-06
Tennessee	1.2E-06	7.9E-06	6.5E-07	9.0E-07	6.1E-06	5.0E-08
Wisconsin	3.1E-06	4.0E-05	2.4E-05	6.0E-08	1.0E-05	1.8E-06
DEAF SMITH						
Illinois	2.6E-06	5.6E-05	4.8E-05	2.0E-06	4.3E-05	3.7E-06
Iowa	4.7E-07	1.0E-06	5.0E-07	3.6E-07	7.6E-07	3.8E-08
Kansas	3.2E-06	2.9E-05	1.3E-05	2.5E-06	2.2E-05	9.6E-07
Missouri	1.9E-06	1.1E-05	4.5E-06	1.5E-06	8.6E-06	2.9E-07
Oklahoma	6.7E-07	6.0E-06	7.3E-07	5.1E-07	4.6E-06	5.6E-08
Texas	1.2E-06	8.2E-06	2.0E-06	8.9E-07	6.2E-06	1.5E-07
Wisconsin	3.1E-06	4.0E-05	2.4E-05	6.0E-08	1.0E-05	1.8E-06
HANFORD						
Idaho	1.4E-06	1.1E-05	1.5E-06	1.2E-06	1.0E-06	1.2E-07
Minnesota	5.3E-06	4.8E-05	1.5E-05	4.0E-06	3.5E-06	1.1E-06
Montana	0.0E+00	2.1E-05	2.2E-06	0.0E+00	1.6E-05	1.7E-07
North Dakota	1.6E-06	1.3E-05	4.1E-06	1.2E-06	1.1E-06	3.5E-07
Washington	1.8E-06	2.2E-05	1.0E-05	1.4E-06	1.2E-06	7.9E-07
Wisconsin	5.7E-06	3.5E-05	1.4E-05	4.3E-06	3.8E-06	1.1E-06
SKULL VALLEY						
Colorado	2.1E-07	9.3E-07		1.6E-07	7.1E-07	
Illinois	2.3E-06	4.3E-05	4.4E-05	1.7E-06	3.3E-05	3.4E-06
Iowa	6.4E-06	2.9E-05	5.5E-06	4.9E-06	2.2E-05	4.2E-07
Nebraska	6.7E-06	3.2E-05	9.9E-06	5.1E-06	2.4E-05	7.5E-07
Utah	2.0E-06	2.9E-05	1.8E-05	1.6E-06	1.4E-06	1.4E-06
Wisconsin	3.1E-06	4.0E-05	2.4E-05	6.0E-08	1.0E-05	1.8E-06
Wyoming	2.2E-06	1.5E-05	3.7E-06	1.6E-06	1.4E-06	2.8E-07

Table II-12. Collective doses to residents along the route (person-Sv) rail shipment origin Maine Yankee

DESTINATION AND ROUTES	Rail-Steel-Pb			Rail-Steel		
	Rural	Suburban	Urban	Rural	Suburban	Urban
ORNL						
Kentucky	5.1E-06	2.6E-05	1.1E-05	3.9E-06	2.0E-05	8.6E-07
Maine	1.5E-06	2.5E-05	9.9E-06	1.1E-06	1.9E-05	7.5E-07
Massachusetts	2.1E-06	4.6E-05	2.8E-05	1.6E-06	3.5E-05	2.2E-06
New Hampshire	6.1E-07	1.2E-05	4.0E-06	4.6E-07	9.2E-06	3.1E-07
New York	7.7E-06	8.3E-05	2.9E-05	5.9E-06	6.3E-05	2.2E-06
Ohio	5.7E-06	7.8E-05	5.2E-05	4.4E-06	6.0E-05	3.9E-06
Pennsylvania	6.7E-07	1.5E-05	8.1E-06	5.1E-07	1.1E-05	6.2E-07
Tennessee	1.2E-06	7.9E-06	6.5E-07	9.0E-07	6.1E-06	5.0E-08
Vermont	1.1E-07	8.3E-07		8.1E-08	6.3E-07	
DEAF SMITH						
Illinois	2.4E-06	4.3E-05	3.9E-05	1.8E-06	3.3E-05	2.9E-06
Indiana	3.3E-06	1.8E-05	8.6E-06	2.5E-06	1.4E-05	6.6E-07
Iowa	4.7E-07	1.0E-06	5.0E-07	3.6E-07	7.6E-07	3.8E-08
Kansas	3.2E-06	2.9E-05	1.3E-05	2.5E-06	2.2E-05	9.6E-07
Maine	1.5E-06	2.5E-05	9.9E-06	1.1E-06	1.9E-05	7.5E-07
Massachusetts	2.1E-06	4.6E-05	2.8E-05	1.6E-06	3.5E-05	2.2E-06
Missouri	1.9E-06	1.1E-05	3.8E-06	1.5E-06	8.6E-06	2.9E-07
New Hampshire	6.1E-07	1.2E-05	4.0E-06	4.6E-07	9.2E-06	3.1E-07
New York	7.7E-06	8.3E-05	2.9E-05	5.9E-06	6.3E-05	2.2E-06
Ohio	3.9E-06	5.1E-05	3.7E-05	3.0E-06	3.9E-05	2.8E-06
Oklahoma	6.9E-07	6.2E-06	7.8E-07	5.3E-07	4.7E-06	5.9E-08
Pennsylvania	6.6E-07	1.5E-05	7.8E-06	5.0E-07	1.1E-05	5.9E-07
Texas	1.2E-06	8.2E-06	2.0E-06	8.9E-07	6.2E-06	1.5E-07
Vermont	1.1E-07	8.3E-07		8.1E-08	6.3E-07	

Table II-12. Collective doses to residents along the route (person-Sv) from rail transportation; shipment origin Maine Yankee -- continued

DESTINATION	Rail-Steel-Pb			Rail-Steel		
	Rural	Suburban	Urban	Rural	Suburban	Urban
HANFORD						
Idaho	1.6E-06	1.1E-05	1.5E-06	1.2E-06	8.2E-06	1.2E-07
Illinois	2.2E-06	3.3E-05	3.5E-05	1.7E-06	2.5E-05	2.7E-06
Indiana	3.3E-06	1.8E-05	8.6E-06	2.5E-06	1.4E-05	6.6E-07
Maine	1.5E-06	2.5E-05	9.9E-06	1.1E-06	1.9E-05	7.5E-07
Massachusetts	2.1E-06	4.6E-05	2.8E-05	1.6E-06	3.5E-05	2.2E-06
Minnesota	5.1E-06	4.7E-05	1.9E-05	3.9E-06	3.6E-05	1.4E-06
Montana	3.5E-06	2.1E-05	2.2E-06	2.7E-06	1.6E-05	1.7E-07
New Hampshire	6.1E-07	1.2E-05	4.0E-06	4.6E-07	9.2E-06	3.1E-07
New York	7.7E-06	8.3E-05	3.5E-05	5.9E-06	6.3E-05	2.2E-06
North Dakota	1.6E-06	1.3E-05	4.1E-06	1.2E-06	1.0E-05	3.2E-07
Ohio	3.9E-06	5.1E-05	3.7E-05	3.0E-06	3.9E-05	2.8E-06
Pennsylvania	6.6E-07	1.5E-05	7.8E-06	5.0E-07	1.1E-05	5.9E-07
Vermont	1.1E-07	8.3E-07		8.1E-08	6.3E-07	
Washington	1.8E-06	2.2E-05	1.0E-05	1.4E-06	1.2E-06	5.7E-07
Wisconsin	2.7E-06	1.3E-05	6.0E-06	2.0E-06	1.0E-05	4.6E-07
SKULL VALLEY						
Colorado	1.0E-06	4.3E-05	2.0E-05	7.8E-07	3.2E-05	1.5E-06
Illinois	3.2E-06	2.6E-05	8.2E-06	2.4E-06	1.9E-05	6.0E-07
Indiana	3.2E-06	2.7E-05	7.8E-06	2.4E-06	2.1E-05	5.9E-07
Iowa	7.2E-06	2.6E-05		5.5E-06	2.0E-05	
Maine	1.5E-06	2.6E-05		1.2E-06	2.0E-05	
Massachusetts	1.0E-06	4.5E-05		7.9E-07	3.4E-05	
Nebraska	7.6E-06	2.1E-05	5.9E-06	5.8E-06	1.6E-05	4.5E-07
New Hampshire	1.8E-07	5.9E-06	7.8E-07	1.4E-07	4.5E-06	5.9E-08
New York	7.7E-06	8.3E-05	2.9E-05	5.9E-06	6.3E-05	2.2E-06
Ohio	3.9E-06	5.1E-05	3.7E-05	3.0E-06	3.9E-05	2.8E-06
Pennsylvania	7.8E-07	1.8E-05	9.5E-06	6.0E-07	1.3E-05	7.2E-07
Utah	2.0E-06	2.9E-05	1.8E-05	1.6E-06	1.4E-06	1.4E-06
Vermont	1.1E-07	8.3E-07		8.1E-08	6.3E-07	
Wyoming	2.2E-06	1.5E-05	3.7E-06	1.6E-06	1.4E-06	2.8E-07

Table II-13. Collective doses to residents along the route (person-Sv) from truck transportation (Truck-DU); shipment origin Maine Yankee

DESTINATION	ROUTES	Rural	Suburban	Urban	Urban Rush Hour
ORNL	**Connecticut**	4.5E-07	2.4E-05	1.6E-08	3.6E-10
	Maine	6.3E-07	1.2E-05	1.9E-09	4.2E-11
	Maryland	5.4E-08	2.1E-06	3.9E-10	8.6E-12
	Massachusetts	4.3E-07	1.9E-05	5.8E-09	1.3E-10
	New Hampshire	7.6E-08	2.4E-06	2.1E-10	4.7E-12
	New Jersey	2.9E-07	1.0E-05	8.9E-09	2.0E-10
	New York	3.4E-09	2.6E-06	8.9E-09	2.0E-10
	Pennsylvania	1.8E-06	2.1E-05	4.6E-09	1.0E-10
	Tennessee	1.2E-06	1.5E-05	2.3E-09	5.1E-11
	Virginia	2.8E-06	3.1E-05	3.6E-09	8.0E-11
	West Virginia	1.8E-07	4.2E-06	2.1E-10	4.6E-12
DEAF SMITH	Connecticut	4.6E-07	2.4E-05	1.6E-08	3.6E-10
	Maine	6.4E-07	1.1E-05	1.1E-09	2.4E-11
	Maryland	5.4E-08	2.1E-06	3.9E-10	8.6E-12
	Massachusetts	4.3E-07	1.9E-05	5.8E-09	1.3E-10
	New Hampshire	7.6E-08	2.4E-06	2.1E-10	4.7E-12
	New Jersey	3.9E-07	1.4E-05	5.0E-09	1.1E-10
	New York	3.8E-08	6.8E-06	5.8E-09	1.3E-10
	Oklahoma	2.6E-06	1.3E-05	3.2E-09	7.0E-11
	Pennsylvania	1.5E-06	1.7E-05	3.8E-09	8.5E-11
	Tennessee	4.7E-06	4.0E-05	1.1E-08	2.5E-10
	Texas	6.3E-07	3.6E-06	2.7E-09	6.1E-11
	Virginia	2.7E-06	3.0E-05	3.5E-09	7.8E-11
	West Virginia	1.8E-07	4.2E-06	2.1E-10	4.6E-12

Table II-13. Collective doses to residents along the route (person-Sv) from truck transportation (Truck-DU); shipment origin Maine Yankee -- continued

	ROUTES	Rural	Suburban	Urban	Urban Rush Hour
HANFORD	Connecticut	4.3E-07	1.8E-05	8.6E-09	1.9E-10
	Idaho	2.2E-06	1.1E-05	2.8E-09	6.1E-11
	Illinois	1.3E-06	1.0E-05	3.5E-09	7.8E-11
	Indiana	1.3E-06	1.1E-05	3.3E-09	7.4E-11
	iowa	3.0E-06	1.1E-05	1.7E-09	3.7E-11
	Maine	6.4E-07	1.1E-05	1.1E-09	2.4E-11
	Massachusetts	4.5E-07	2.0E-05	6.0E-09	1.3E-10
	Nebraska	3.2E-06	8.6E-06	2.5E-09	5.6E-11
	New Hampshire	7.6E-08	2.4E-06	2.1E-10	4.7E-12
	New York	4.4E-07	9.1E-06	1.4E-09	3.2E-11
	Ohio	2.0E-06	2.0E-05	4.9E-09	1.1E-10
	Oregon	1.3E-06	4.6E-06	7.6E-10	1.7E-11
	Pennsylvania	3.2E-06	1.8E-05	2.4E-09	5.3E-11
	Utah	1.0E-06	6.4E-06	5.2E-10	1.2E-11
	Washington	1.4E-07	1.3E-06	1.4E-09	3.2E-11
	Wyoming	1.5E-06	5.7E-06	1.0E-09	2.2E-11
SKULL VALLEY	Connecticut	4.3E-07	1.8E-05	8.6E-09	1.9E-10
	Illinois	1.3E-06	1.0E-05	3.5E-09	7.8E-11
	Indiana	1.3E-06	1.1E-05	3.3E-09	7.4E-11
	Iowa	3.0E-06	1.1E-05	1.7E-09	3.7E-11
	Maine	6.4E-07	1.1E-05	1.1E-09	2.4E-11
	Massachusetss	4.3E-07	1.9E-05	5.8E-09	1.3E-10
	Nebraska	3.2E-06	8.6E-06	2.5E-09	5.6E-11
	New Hampshire	7.6E-08	2.4E-06	2.1E-10	4.7E-12
	New York	4.4E-07	9.1E-06	1.4E-09	3.2E-11
	Ohio	2.0E-06	2.0E-05	4.9E-09	1.1E-10
	Pennsylvamia	3.2E-06	1.8E-05	2.4E-09	5.3E-11
	Utah	8.2E-07	7.4E-06	5.9E-09	1.3E-10
	Wyoming	1.5E-06	5.7E-06	1.0E-09	2.2E-11

Table II-14 Collective doses to residents along the route (person-Sv) from truck transportation (Truck-DU); shipment origin Indian Point.

DESTINATION	ROUTES	Rural	Suburban	Urban	Urban Rush Hour
ORNL	Maryland	5.4E-08	2.1E-06	3.9E-10	8.3E-12
	New Jersey	3.9E-07	1.4E-05	5.0E-09	1.1E-10
	New York	7.5E-08	7.0E-06	6.3E-09	1.4E-10
	Pennsylvania	1.5E-06	1.7E-05	3.8E-09	8.3E-11
	Tennessee	1.3E-06	1.6E-05	1.9E-09	3.8E-11
	Virginia	2.7E-06	3.0E-05	3.5E-09	7.8E-11
	West virginia	1.8E-07	4.2E-06	2.1E-10	4.6E-12
DEAF SMITH	Arkansas	2.3E-06	1.6E-05	2.8E-09	6.2E-11
	Maryland	5.4E-08	2.1E-06	3.9E-10	8.6E-12
	New Jersey	3.9E-07	1.4E-05	5.0E-09	1.1E-10
	New York	7.5E-08	7.0E-06	6.3E-09	1.4E-10
	Oklahoma	2.7E-06	1.4E-05	3.3E-09	6.6E-11
	Pennsylvania	1.5E-06	1.7E-05	3.8E-09	8.3E-11
	Texas	6.3E-07	3.6E-06	2.7E-09	5.2E-11
	Virginia	2.7E-06	3.0E-05	3.5E-09	7.8E-11
	West Virginia	1.8E-07	4.2E-06	2.1E-10	4.6E-12
HANFORD	Idaho	2.2E-06	1.1E-05	2.8E-09	5.4E-11
	Illinois	1.3E-06	1.0E-05	3.6E-09	8.1E-11
	Indiana	1.4E-06	1.1E-05	3.3E-09	7.4E-11
	Iowa	3.0E-06	1.1E-05	1.7E-09	3.7E-11
	Nebraska	3.2E-06	8.6E-06	2.5E-09	5.6E-11
	New Jersey	4.2E-07	1.1E-05	4.1E-09	9.1E-11
	New York	7.5E-08	7.0E-06	6.3E-09	1.4E-10
	Ohio	2.0E-06	2.0E-05	4.9E-09	1.1E-10
	Oregon	1.4E-06	5.1E-06	7.6E-10	1.7E-11
	Pennsylvania	2.9E-06	1.4E-05	1.1E-09	2.3E-11
	Utah	1.0E-06	6.4E-06	5.2E-10	1.2E-11
	Washington	1.4E-07	1.3E-06	1.4E-09	3.2E-11
	Wyoming	1.5E-06	5.7E-06	1.0E-09	2.2E-11
SKULL VALLEY	Illinois	1.3E-06	1.0E-05	3.5E-09	7.8E-11
	Indiana	1.3E-06	1.1E-05	3.3E-09	7.4E-11
	Iowa	3.0E-06	1.1E-05	1.7E-09	3.7E-11
	Nebraska	3.2E-06	8.6E-06	2.5E-09	5.6E-11
	New Jersey	4.2E-07	1.1E-05	4.1E-09	9.1E-11
	New York	7.5E-08	7.0E-06	6.3E-09	1.4E-10
	Ohio	2.0E-06	2.0E-05	4.9E-09	1.1E-10
	Pennsylvania	2.9E-06	1.4E-05	1.1E-09	2.3E-11
	Utah	8.2E-07	7.4E-06	5.9E-09	1.3E-10
	Wyoming	1.5E-06	5.7E-06	1.0E-09	2.2E-11

Table II-15. Collective doses to residents along the route (person-Sv) from truck transportation (Truck-DU); shipment origin INL

DESTINATION	ROUTES	Rural	Suburban	Urban	Urban Rush Hour
ORNL	Colorado	1.7E-06	7.4E-06	4.0E-09	8.8E-11
	Idaho	1.0E-06	4.3E-06	7.1E-10	1.4E-11
	Illinois	1.4E-06	9.7E-06	5.6E-10	1.3E-11
	Kansas	2.6E-06	1.1E-05	3.3E-09	7.3E-11
	Kentucky	9.2E-07	3.7E-06	5.3E-11	1.2E-12
	Missouri	1.9E-06	2.4E-05	9.0E-09	2.0E-10
	Tennessee	2.2E-06	1.4E-05	3.3E-09	7.3E-11
	Utah	1.1E-06	6.7E-06	5.2E-10	1.2E-11
	Wyoming	1.3E-06	4.0E-06	7.1E-10	1.6E-11
DEAF SMITH	Colorado	2.0E-06	2.5E-05	1.3E-08	2.8E-10
	Idaho	1.0E-06	4.3E-06	7.1E-10	1.6E-11
	New Mexico	1.9E-06	8.9E-06	5.3E-09	1.2E-10
	Texas	8.4E-08	1.5E-07	0.0E+00	0.0E+00
	Utah	9.6E-07	6.1E-06	5.0E-10	1.1E-11
	Wyoming	1.3E-06	4.1E-06	7.4E-10	1.6E-11
HANFORD	Idaho	2.7E-06	1.4E-05	3.2E-09	7.1E-11
	Oregon	1.3E-06	4.7E-06	7.3E-10	1.6E-11
	Washington	1.4E-07	1.3E-06	1.4E-09	3.2E-11
SKULL VALLEY	Idaho	1.0E-06	4.3E-06	7.1E-10	1.6E-11
	Utah	9.6E-07	1.2E-05	7.0E-09	1.5E-10

Comment [JRC32]: Should be blank for consistency with previous tables?

Table II-16. Collective doses to residents along the route (person-Sv) from truck transportation (Truck-DU); shipment origin Kewaunee.

DESTINATION	ROUTES	Rural	Suburban	Urban	Urban Rush Hour
ORNL	Illinois	3.4E-07	1.6E-05	1.0E-08	2.4E-10
	Indiana	2.1E-06	1.9E-05	5.8E-09	1.3E-10
	Kentucky	1.9E-06	1.7E-05	3.7E-09	8.3E-11
	Ohio	9.5E-08	1.3E-06	3.1E-10	7.0E-12
	Tennessee	5.8E-07	9.9E-06	2.3E-09	4.5E-11
	Wisconsin	1.6E-06	1.2E-05	1.0E-08	2.2E-10
DEAF SMITH	Illinois	1.2E-06	5.2E-06	3.5E-10	8.2E-12
	Iowa	2.3E-06	1.2E-05	1.8E-09	4.0E-11
	Kansas	1.7E-06	1.1E-05	4.6E-09	1.0E-10
	Missouri	1.0E-06	9.7E-06	1.8E-09	3.2E-11
	Oklahoma	1.7E-06	9.6E-06	2.7E-09	6.0E-11
	Texas	6.3E-07	3.6E-06	1.8E-09	5.2E-11
	Wisconsin	2.0E-06	1.2E-05	8.0E-09	1.8E-10
HANFORD	Idaho	3.3E-07	6.6E-06	1.7E-09	3.4E-11
	Minnesota	2.7E-06	4.4E-06	3.8E-10	8.3E-12
	Montana	3.3E-06	1.3E-05	2.9E-09	6.4E-11
	South Dakota	2.3E-06	6.2E-06	8.9E-10	2.0E-11
	Washington	1.6E-06	1.5E-05	5.9E-09	1.3E-10
	Wisconsin	3.3E-06	1.8E-05	7.8E-09	1.7E-10
	Wyoming	8.9E-07	2.6E-06	6.3E-10	1.4E-11
SKULL VALLEY	Illinois	1.2E-06	5.2E-06	3.5E-10	8.2E-12
	Iowa	3.0E-06	1.1E-05	1.7E-09	3.7E-11
	Nebraska	3.2E-06	8.6E-06	2.5E-09	5.6E-11
	Utah	8.2E-07	7.4E-06	5.9E-09	1.2E-10
	Wisconsin	2.0E-06	1.2E-05	8.0E-09	1.8E-10
	Wyoming	1.5E-06	5.7E-06	1.0E-09	2.2E-11

Collective dose is best used in making comparisons; e.g., in comparing the risks of routine transportation along different routes. All collective doses modeled are of the order of 10^{-5} person-Sv or less. The tables show that, in general, urban residents sustain a slightly larger dose from rail transportation than from truck transportation on the same state route, even though urban population densities are similar; e.g., for the Maine urban segment of the Maine Yankee-to-ORNL route,

Comment [JRC33]: Almost 100 times larger is slightly?

- the truck route urban population density is 2706 persons/km^2 and the collective dose is 1×10^{-7} person-Sv
- the rail route urban population density is 2527 persons/km^2, but the collective dose is 9.9×10^{-4} person-Sv from the Rail-Steel-Pb cask is almost 100 times larger than the dose from the Truck-DU cask, even though the external dose rates from the two casks are nearly the same.

Doses from rail transportation through urban areas are larger than those from truck transportation because train transportation was designed, and train tracks were laid, to go from city center to city

center. Trucks carrying spent fuel, on the other hand, are required to use the interstate highway system, and to use bypasses around cities where such bypasses exist. In the example presented, the truck traverses 5 km of urban route while the train traverses 13 urban km. In addition, the average urban train speed is 24 km/hour (15mph) while the average urban truck speed is 102 km/hour (63.4 mph). A truck carrying a cask through an urban area at about four times the speed of a train carrying a similar cask will deliver ¼ the dose of the trail cask.

Comment [JRC34]: Why are truck suburban doses about 1,000-10,000 times greater than truck urban doses?

II.5.4.2 Doses to occupants of vehicles sharing the route

Rail

The dose to occupants of trains other than the train carrying the radioactive cargo is provided in Table II-17. The vehicle occupancies used to calculate the table, one person on rural and suburban segments, and five people on urban segments, have been used historically in RADTRAN since 1988. The occupancy is consistent with the following considerations:

Comment [JRC35]: Primarily crew of other cargo trains?

Comment [JRC36]: train

Comment [JRC37]: So the train occupancy changes based on segment population?

- Freight trains carry a crew of three, but all but one or two of the 60 to 120 cars on a freight train are unoccupied.
- Urban track carries almost all passenger rail traffic.
- Dose is calculated for one cask on a train, and rail statistics are per railcar, not per train.

The net dose to occupants of other trains depends on train speed and the external dose rate from the spent fuel cask. Train speeds are available only for the entire U.S., not for each state. Therefore the doses to occupants of trains that share the route with either a loaded Rail-Steel-Pb cask or a loaded Rail-Steel cask are shown in Table II-17 for rural, suburban, and urban segments of each entire route. The rural and about half of the suburban collective doses may be unrealistically large.

Comment [JRC38]: Rationale?

Table II-17. Collective doses (person-Sv) to occupants of trains sharing the route.

SHIPMENT ORIGIN	SHIPMENT DESTINATION	Rail Steel-Pb CASK			Rail Steel CASK		
		Rural	Suburban	Urban	Rural	Suburban	Urban
MAINE YANKEE	ORNL	5.3E-06	1.6E-05	1.1E-04	4.0E-06	1.2E-05	7.6E-06
	DEAF SMITH	1.0E-05	1.8E-05	1.4E-04	7.7E-06	1.4E-05	9.9E-06
	HANFORD	1.5E-05	2.2E-05	1.5E-04	1.2E-05	1.7E-05	1.1E-05
	SKULL VALLEY	1.3E-05	2.4E-05	1.2E-04	9.9E-06	1.9E-05	8.5E-06
KEWAUNEE	ORNL	3.7E-06	9.4E-06	8.5E-05	2.8E-06	7.1E-06	5.9E-06
	DEAF SMITH	6.4E-06	7.0E-06	7.4E-05	4.8E-06	5.3E-06	5.2E-06
	HANFORD	6.7E-06	9.0E-06	4.1E-05	5.0E-06	6.9E-06	2.8E-06
	SKULL VALLEY	9.4E-06	1.0E-05	8.5E-05	7.2E-06	7.9E-06	5.9E-06
INDIAN POINT	ORNL	2.5E-06	1.1E-05	1.4E-04	1.9E-06	8.2E-06	9.7E-06
	DEAF SMITH	9.8E-06	1.4E-05	1.4E-04	7.4E-06	1.1E-05	9.6E-06
	HANFORD	1.2E-05	1.9E-05	1.5E-04	8.8E-06	1.5E-05	1.1E-05
	SKULL VALLEY	5.9E-06	4.2E-05	7.1E-05	4.4E-06	3.2E-05	2.7E-05
INL	ORNL	4.0E-06	5.3E-05	5.5E-05	3.0E-06	4.0E-05	3.8E-06
	DEAF SMITH	7.3E-06	4.4E-06	2.7E-05	5.6E-06	3.3E-06	1.9E-06
	HANFORD	4.1E-06	2.3E-06	1.4E-05	3.1E-06	1.8E-06	9.4E-07
	SKULL VALLEY	1.5E-06	2.0E-06	1.7E-05	1.1E-06	1.5E-06	1.2E-06

Truck

Vehicle density data for large semi-detached trailer trucks traveling U.S. interstates and primary highways is available and well qualified. Every state records traffic counts on major (and most minor) highways, and publishes these routinely. Average vehicle density data from each of the 10 EPA regions was used (Weiner,et al. 2009, Appendix D). The EPA regions were used because they include all of the "lower 48" U.S. states (Alaska and Hawaii are included in EPA Region 10 but are not considered in this risk assessment). Table II-18 shows the 10 EPA regions.

Table II-18. States comprising the ten EPA regions

Region	States Included in Region
1	Connecticut, Massachusetts, Maine, New Hampshire, Rhode Island, Vermont
2	New Jersey, New York
3	Delaware. Maryland, Pennsylvania, Virginia, West Virginia
4	Alabama, Florida, Georgia, Kentucky, Mississippi, North Carolina, South Carolina, Tennessee
5	Illinois, Indiana, Michigan, Minnesota, Ohio, Wisconsin
6	Arkansas, Louisiana, New Mexico, Oklahoma, Texas
7	Iowa, Kansas, Missouri, Nebraska
8	Colorado, Montana, North Dakota, South Dakota, Utah, Wyoming
9	Arizona, California, Nevada
10	Idaho, Oregon , Washington

The calculation of doses to occupants sharing the highway route with the radioactive materials truck is complex in that vehicles traveling in both directions are considered (the equations that describe this calculation are Equations 28 and 34 of Neuhauser et al, 2000). Figure II-6 is the diagram accompanying these equations and shows the parameters used in the calculation. Parameter values are in Table II-1.

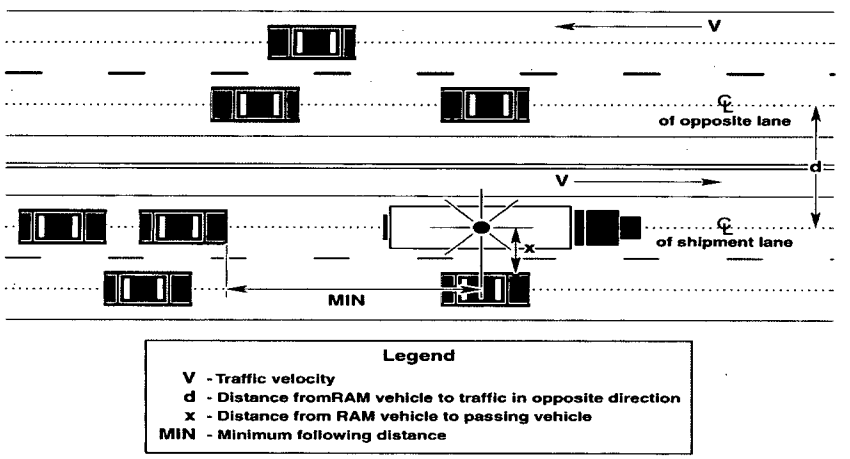

Figure II-6. Parameters for calculating doses to occupants of highway vehicles sharing the route with the radioactive shipment (From Figure 3-2 of Neuhauser, et al, 2000).

Tables II-19 to II-22 show the doses to individuals in vehicles sharing the highway route with the truck carrying a loaded Truck-DU cask.

Table II-19. Collective doses to persons sharing the route (person-Sv) from truck transportation (Truck-DU); shipment origin Maine Yankee

DESTINATION	ROUTES	Rural	Suburban	Urban	Urban Rush Hour
ORNL	Connecticut	1.9E-06	9.1E-06	9.1E-06	8.5E-07
	Maine	2.9E-06	6.7E-06	1.1E-06	1.0E-07
	Maryland	1.3E-06	4.9E-06	9.0E-07	8.3E-08
	Massachusetts	1.7E-06	8.7E-06	3.4E-06	3.2E-07
	New Hampshire	3.7E-07	1.4E-06	1.9E-07	1.8E-08
	New Jersey	5.1E-06	1.2E-05	9.2E-06	8.5E-07
	New York	1.8E-07	2.1E-06	1.3E-05	1.2E-06
	Pennsylvania	3.0E-05	4.8E-05	7.0E-06	6.5E-07
	Tennessee	1.7E-05	3.2E-05	4.2E-06	3.9E-07
	Virginia	6.4E-05	9.3E-05	6.2E-06	5.7E-07
	West Virginia	2.8E-06	1.2E-05	4.5E-07	4.1E-08
DEAF SMITH	Connecticut	3.1E-05	2.1E-05	2.8E-06	2.6E-07
	Maine	2.0E-06	9.2E-06	9.2E-06	8.5E-07
	Maryland	2.9E-06	6.8E-06	7.3E-07	6.8E-08
	Massachusetts	1.3E-06	4.9E-06	9.0E-07	8.3E-08
	New Hampshire	4.2E-06	2.9E-05	8.7E-06	8.0E-06
	New Jersey	9.5E-07	4.8E-06	4.8E-07	4.4E-07
	New York	4.5E-06	1.6E-05	6.6E-06	6.1E-07
	Oklahoma	7.5E-07	6.8E-06	6.9E-06	6.4E-07
	Pennsylvania	4.2E-05	1.6E-05	2.8E-06	2.6E-07
	Tennessee	3.0E-05	4.8E-05	7.0E-06	6.5E-07
	Texas	7.8E-05	8.6E-05	2.0E-05	1.8E-06
	Virginia	2.2E-05	3.1E-06	2.4E-06	2.2E-07
	West Virginia	6.4E-05	9.3E-05	6.2E-06	5.7E-07

Table II-19. Collective doses to persons sharing the route (person-Sv) from truck transportation (Truck-DU); shipment origin Maine Yankee -- continued

DESTINATION	ROUTES	Rural	Suburban	Urban	Urban Rush Hour
HANFORD	Connecticut	1.7E-06	8.0E-06	5.1E-06	4.7E-07
	Idaho	4.4E-05	2.3E-05	4.6E-06	4.2E-07
	Illinois	2.4E-05	2.0E-05	5.0E-06	4.6E-07
	Indiana	1.8E-05	2.6E-05	4.6E-06	4.3E-07
	iowa	4.0E-05	1.7E-05	1.4E-06	1.3E-07
	Maine	2.9E-06	6.8E-06	7.3E-07	6.8E-08
	Massachusetts	1.7E-06	8.7E-06	3.4E-06	3.2E-07
	Nebraska	6.7E-05	1.3E-05	1.9E-06	1.8E-07
	New Hampshire	3.7E-07	1.4E-06	1.9E-07	1.8E-08
	New York	2.5E-06	4.6E-06	1.1E-06	9.9E-08
	Ohio	8.7E-05	6.9E-05	4.0E-06	3.7E-07
	Oregon	3.7E-05	9.5E-06	1.4E-06	1.3E-07
	Pennsylvania	8.7E-05	6.9E-05	4.0E-06	3.7E-07
	Utah	1.6E-05	1.1E-05	6.2E-07	5.7E-08
	Washington	7.6E-06	2.1E-06	2.6E-06	2.4E-07
	Wyoming	7.5E-05	1.0E-05	2.1E-06	2.0E-07
SKULL VALLEY	Connecticut	1.7E-06	8.0E-06	5.1E-06	4.7E-07
	Illinois	2.4E-05	2.0E-05	5.0E-06	4.6E-07
	Indiana	1.8E-05	2.6E-05	4.6E-06	4.3E-07
	Iowa	4.0E-05	1.7E-05	1.4E-06	1.3E-07
	Maine	2.9E-06	6.8E-06	7.3E-07	6.8E-08
	Massachusetss	1.7E-06	8.7E-06	3.4E-06	3.2E-07
	Nebraska	6.7E-05	1.3E-05	1.9E-06	1.8E-07
	New Hampshire	9.5E-07	4.8E-06	4.8E-07	4.4E-07
	New York	5.8E-06	1.3E-05	2.1E-06	1.9E-07
	Ohio	8.7E-05	6.9E-05	4.0E-06	3.7E-07
	Pennsylvamia	8.7E-05	6.9E-05	4.0E-06	3.7E-07
	Utah	1.8E-05	8.1E-06	6.1E-06	5.6E-07
	Wyoming	7.5E-05	1.0E-05	2.1E-06	2.0E-07

Table II-20. Collective doses to persons sharing the route (person-Sv) from truck transportation (Truck-DU); shipment origin Indian Point.

DESTINATION	ROUTES	Rural	Suburban	Urban	Urban Rush Hour
ORNL	Maryland	1.3E-06	4.9E-06	9.0E-07	8.3E-08
	New Jersey	4.5E-06	1.6E-05	6.6E-06	6.1E-07
	New York	1.3E-06	6.5E-06	7.6E-06	7.0E-07
	Pennsylvania	3.0E-05	4.8E-05	7.0E-06	6.5E-07
	Tennessee	1.7E-05	3.4E-05	3.8E-06	3.5E-07
	Virginia	6.4E-05	9.3E-05	6.2E-06	5.7E-07
	West Virginia	6.4E-05	1.2E-05	4.5E-07	4.1E-08
DEAF SMITH	Arkansas	3.1E-05	2.1E-05	2.8E-06	2.6E-07
	Maryland	1.3E-06	4.9E-06	9.0E-07	8.3E-08
	New Jersey	4.5E-06	1.6E-05	6.6E-06	6.1E-07
	New York	1.3E-06	6.5E-06	7.6E-06	7.0E-07
	Oklahoma	4.2E-05	1.6E-05	2.8E-06	2.6E-07
	Pennsylvania	3.0E-05	4.8E-05	7.0E-06	6.5E-07
	Texas	7.8E-05	8.6E-05	2.0E-05	1.8E-06
	Virginia	2.2E-05	3.1E-06	2.4E-06	2.2E-07
	West Virginia	6.4E-05	9.3E-05	6.2E-06	5.7E-07
HANFORD	Idaho	2.8E-06	1.2E-05	4.5E-07	4.1E-08
	Illinois	4.4E-05	2.3E-05	4.6E-06	4.2E-07
	Indiana	2.4E-05	2.0E-05	5.0E-06	4.6E-07
	Iowa	1.8E-05	2.6E-05	4.6E-06	4.3E-07
	Nebraska	4.0E-05	1.7E-05	1.4E-06	1.3E-07
	New Jersey	6.7E-05	1.3E-05	1.9E-06	1.8E-07
	New York	4.8E-06	1.3E-05	5.6E-06	5.2E-07
	Ohio	1.3E-06	6.5E-06	7.6E-06	7.0E-07
	Oregon	1.5E-06	7.6E-06	8.1E-06	7.4E-07
	Pennsylvania	3.7E-05	9.5E-06	1.4E-06	1.3E-07
	Utah	8.0E-05	5.7E-05	2.2E-06	2.0E-07
	Washington	1.6E-05	1.1E-05	6.2E-07	5.7E-08
	Wyoming	7.6E-06	2.1E-06	2.6E-06	2.4E-07
SKULL VALLEY	Illinois	7.5E-05	1.0E-05	2.1E-06	2.0E-07
	Indiana	2.4E-05	2.0E-05	5.0E-06	4.6E-07
	Iowa	1.8E-05	2.6E-05	4.6E-06	4.3E-07
	Nebraska	4.0E-05	1.7E-05	1.4E-06	1.3E-07
	New Jersey	6.7E-05	1.3E-05	1.9E-06	1.8E-07
	New York	5.6E-06	1.5E-05	5.9E-06	5.5E-07
	Ohio	1.5E-06	7.6E-06	8.1E-06	7.4E-07
	Pennsylvania	2.8E-05	4.1E-05	7.3E-06	6.7E-07
	Utah	8.0E-05	5.7E-05	2.2E-06	2.0E-07
	Wyoming	1.7E-05	8.1E-06	6.1E-06	5.6E-07

Table II-21. Collective doses to persons sharing the route (person-Sv) from truck transportation (Truck-DU); shipment origin INL

DESTINATION	ROUTES	Rural	Suburban	Urban	Urban Rush Hour
ORNL	Colorado	3.1E-05	1.1E-05	4.0E-06	3.7E-07
	Idaho	2.2E-05	8.0E-06	1.3E-06	1.2E-07
	Illinois	2.5E-05	2.4E-05	1.1E-06	1.0E-07
	Kansas	6.2E-05	1.4E-05	2.7E-06	2.5E-07
	Kentucky	1.8E-05	1.1E-05	1.2E-07	1.2E-08
	Missouri	2.5E-05	2.3E-05	7.2E-06	6.7E-07
	Tennessee	3.3E-05	3.5E-05	5.2E-06	4.8E-07
	Utah	1.3E-05	1.1E-05	6.2E-07	5.7E-08
	Wyoming	7.0E-05	7.6E-06	1.5E-06	1.4E-07
DEAF SMITH	Colorado	3.9E-05	3.6E-05	1.9E-05	1.8E-05
	Idaho	2.2E-05	8.0E-06	1.3E-06	1.2E-07
	New Mexico	6.4E-05	9.8E-06	4.8E-06	4.4E-07
	Texas	7.7E-06	1.7E-07	0.0E+00	0.0E+00
	Utah	1.3E-05	1.1E-05	6.2E-07	5.7E-08
	Wyoming	7.0E-05	7.6E-06	1.5E-06	1.4E-07
HANFORD	Idaho	5.5E-05	6.3E-05	5.4E-06	5.0E-07
	Oregon	3.7E-05	2.0E-05	1.4E-06	1.31E-07
	Washington	7.6E-06	2.1E-06	2.6E-06	2.4E-07
SKULL VALLEY	Idaho	2.2E-05	8.0E-06	1.3E-06	1.2E-07
	Utah	1.5E-05	1.5E-05	7.2E-06	6.6E-07

Table II-22. Collective doses to persons sharing the route (person-Sv) from truck transportation (Truck-DU); shipment origin Kewaunee.

DESTINATION	ROUTES	Rural	Suburban	Urban	Urban
ORNL	Illinois	3.7E-06	2.0E-05	1.4E-05	1.3E-06
	Indiana	3.3E-05	3.8E-05	8.3E-06	7.7E-07
	Kentucky	2.7E-05	4.3E-05	7.2E-06	6.7E-07
	Ohio	1.4E-06	2.5E-06	5.4E-07	5.0E-08
	Tennessee	1.1E-05	1.8E-05	4.4E-06	4.1E-07
	Wisconsin	2.0E-05	2.1E-05	1.3E-05	1.2E-06
DEAF SMITH	Illinois	2.0E-05	1.2E-05	5.9E-07	5.4E-08
	Iowa	3.2E-05	1.6E-05	1.6E-06	1.4E-07
	Kansas	2.9E-05	1.2E-05	3.5E-06	3.2E-07
	Missouri	1.4E-05	1.1E-05	1.3E-06	1.2E-07
	Oklahoma	3.4E-05	1.1E-05	2.8E-06	2.6E-07
	Texas	2.2E-05	3.1E-06	2.4E-06	2.2E-07
	Wisconsin	2.5E-05	2.3E-05	9.8E-06	9.0E-07
HANFORD	Idaho	9.3E-06	1.1E-05	3.0E-06	2.8E-07
	Minnesota	5.2E-05	1.3E-05	5.4E-07	5.0E-08
	Montana	9.6E-05	3.0E-05	5.4E-06	5.0E-07
	South Dakota	5.3E-05	1.2E-05	1.0E-06	9.5E-08
	Washington	4.6E-05	3.0E-05	1.1E-05	1.0E-06
	Wisconsin	4.6E-05	4.0E-05	9.9E-06	9.2E-07
	Wyoming	4.0E-05	4.1E-06	1.4E-06	1.3E-07
SKULL VALLEY	Illinois	2.0E-05	1.2E-05	5.9E-07	5.4E-08
	Iowa	4.0E-05	1.7E-05	1.4E-06	1.3E-07
	Nebraska	6.7E-05	1.3E-05	1.9E-06	1.8E-07
	Utah	2.4E-05	1.0E-05	8.8E-06	8.1E-06
	Wisconsin	2.5E-05	2.3E-05	9.8E-06	9.0E-07
	Wyoming	7.5E-05	1.0E-05	2.1E-06	2.0E-07

II.5.4.3 Doses from stopped vehicles

Rail

Trains are stopped in classification yards at the origin and destination of the trip. The usual length of these classification stops is 27 hours. The collective dose to the railyard workers at these classification stops from the radioactive cargo is calculated internally by RADTRAN and is based on calculations of Wooden (1986) which authors of this document have verified. This "classification yard dose" for the two rail casks studied is:

- For the Rail-Steel-Pb: 1.5×10^{-5} person-Sv
- For the Rail-Steel: 1.1×10^{-5} person-Sv

- These collective doses include doses to the train crew while the train is in the yard.

The collective dose to people living near a classification yard is calculated by multiplying the average dose from the rail cask to an individual living near a classification yard, as shown in Table II-7, by the population density between 200 and 800 meters from the rail yard. The population density is obtained from WebTRAGIS, and the integration from 200 to 800 meters (Table II-2) is performed by RADTRAN.

Most train stops along any route are shown in the WebTRAGIS output for that route. The stops on the rail route from Maine Yankee to Hanford are shown in Table II-23 as an example.

Table II-23. Example of rail stops on the Maine Yankee-to-Hanford rail route

Stop	Reason	Route type (R, S, U)[a] and State	Time (hours)
1	Railroad transfer (short line to ST)	S, ME	4.0
2	Railroad transfer (ST to CSXT)	R, NY	4.0
3	Railroad transfer (CSXT to IMB)	S, IL	4.0
4	Railroad transfer (IMB to BNSF)	S, IL	0
5	Railroad transfer (BNSF to UP)	S, WA	0

[a]Determined by the user from the WebTRAGIS output

Railyard worker collective doses can then be calculated for Stops 1, 2, and 3 in Table II-23. Parametr values are from Table II-23 and page 36.:

Comment [JRC40]: Was spell check performed?

Dose: $(4/27)*(1.5 \times 10^{-5}) = 2.2 \times 10^{-6}$ person- Sv for the Rail-Pb cask.

Dose: $(4/27)*(1.1 \times 10^{-5}) = 1.6 \times 10^{-6}$ person-Sv for the Rail-Steel cask.

The factor of 4/27 is in the equation because the classification stop doses are calculated by RADTRAN for activities lasting a total of 27 hours, and the in-transit stops are for only four hours.

The average dose to an individual living 200 to 800 meters from a classification yard, as calculated by RADTRAN, is

- 3.5×10^{-7} Sv from the Rail-Pb cask.
- 2.7×10^{-7} Sv from the Rail-Steel cask.

Collective doses to residents near a yard (a classification yard or railroad stop) are then calculated from the general expression:

(II-4) Dose (person-Sv) = (Population density)*(Dose/hr to resident near yard)*(Stop time)

Thus, for a rural population density of 13.2 persons/km^2 (the average along the Maine Yankee-to-Hanford route) living near Stop 1 in Table II-23,

Dose = (13.2 persons/km^2)*(3.5×10^{-7} Sv-km^2/hour)*(4 hours) = 1.9×10^{-5} person-Sv.

Results for the stops are in Table II-24.

Table II-24. Doses at rail stops on the Maine Yankee-to-Hanford rail route

Stop	Route type (R, S, U)[a]	Time (hours)	Railyard worker dose (person-Sv)		Residents near stop (person-Sv)	
			Rail-Pb	Rail-Steel	Rail- Pb	Rail-Steel
1	S, ME	4.0	2.16E-06	1.61E-06	3.42E-06	2.59E-06
2	R, NY	4.0	2.16E-06	1.61E-06	9.15E-07	6.94E-07
3	S, IL	2.0	1.08E-06	8.05E-07	1.24E-05	9.37E-06

[a]Determined by the user from the WebTRAGIS output

Truck

Doses at truck stops are calculated differently. There are two types of receptors at a truck stop, in addition to the truck crew: residents who live near the stop and people who share the stop with the refueling truck. Griego, et al (1996) conducted some time and motion studies at a number of truck stops. They found that the average number of people at a stop between the gas pumps and the nearest building was 6.9, the average distance from the fuel pump to the nearest building was 15 meters, and the longest refueling time for a large semi-detached trailer truck was 0.83 hour (50 minutes). With these parameters, the collective dose to the people sharing the stop would be 2.3 x 10^{-4} person-Sv (Table II-8). The relationship between the collective dose and the number of receptors is not linear in this case. If there are more people sharing the stop, the analysis should be repeated using RADTRAN.

Comment [JRC42]: During?

Comment [JRC43]: What is the impact of this non-linearity?

Comment [JRC44]: User guide type text not appropriate here?

The collective dose to residents near the stop is calculated in the same way as for rail transportation, using data in Table II-8, the population density of the region around the stop, and the stop time.

(II-5) Dose (person-Sv) = (Population density)*(Dose/hr to resident near stop)*(Stop time)

Thus, for a rural population density of 15.1 persons/km^2 (the average along the Maine Yankee-to-Hanford route):

Deleted:

Dose = (15.1 persons/km^2)*(3.3 x 10^{-6} Sv-km^2/hour)*(0.83 hours) = 4.1 x 10^{-5} person-Sv.

The population density used in the calculation is the density around the truck stop; appropriate residential shielding factors are used in the calculation. Unlike a train, the truck will stop several times on any truck route to fill the fuel tanks. Very large trucks generally carry two 80-gallon tanks each and stop for fuel when the tanks are half empty. A semi carrying a Truck-DU cask can travel an average of 845 km (DOE, 2002) before needing to refuel. The number of refueling (and rest) stops depends on the length of each type of route segment. The following equations are used in this calculation

(II-6) Route segment length (km)/(845 km/stop) = stops/route segment

(II-7) Dose (person-Sv) = (population/km^2)*(dose to resident near stop(Sv-km^2/hr))*

(stops/route segment)*(hours/stop)

Table II-25 shows the collective doses to residents near stops for the rural and suburban segments of the 16 routes in Table II.4.1. Trucks carrying Truck-DU casks of spent fuel are unlikely to stop in urban areas.

Table II-25. Collective doses to residents near truck stops

Origin	Route	Type	Persons/ km²	Average number of stops	Person-Sv
Maine Yankee	ORNL	Rural	19.9	1.73	1.1E-06
		Suburban	395	2.09	2.3E-05
	Deaf Smith	Rural	18.6	2.47	1.5E-06
		Suburban	371	1.6	1.7E-05
	Hanford	Rural	15.4	4.33	2.2E-06
		Suburban	325	1.5	1.4E-05
	Skull Valley	Rural	16.9	3.5	1.9E-06
		Suburban	332.5	1.3	1.2E-05
Kewaunee	ORNL	Rural	19.8	0.81	5.2E-07
		Suburban	361	0.59	0.0E+00
	Deaf Smith	Rural	13.5	2.0	6.0E-06
		Suburban	339	0.52	8.6E-07
	Hanford	Rural	10.5	3.4	5.0E-06
		Suburban	316	0.60	1.2E-06
	Skull Valley	Rural	12.5	2.6	5.4E-06
		Suburban	324.5	0.44	1.1E-06
Indian Point	ORNL	Rural	20.5	0.71	4.1E-06
		Suburban	388	0.71	4.7E-07
	Deaf Smith	Rural	17.1	2.3	7.8E-06
		Suburban	370	1.2	1.3E-06
	Hanford	Of stops	13.0	4.1	1.3E-06
		Suburban	338	1.1	1.8E-06
	Skull Valley	Rural	14.2	3.3	1.1E-05
		Suburban	351	0.93	1.5E-06
INL	ORNL	Rural	12.4	3.1	9.3E-06
		Suburban	304	0.72	1.3E-06
	Deaf Smith	Rural	7.8	2.3	6.3E-06
		Suburban	339	0.35	5.8E-07
	Hanford	Rural	6.5	0.43	3.4E-06
		Suburban	200	0.57	9.0E-08
	Skull Valley	Rural	10.1	0.42	3.2E-06
		Suburban	343	0.11	1.4E-07

[a]The number of stops is the kilometers of the route segment divided by 845 km, the distance between stops, so that it may be a fraction. Retaining the fraction allows the calculation to be repeated.

Comment [JRC46]: Unclear.

The rural and suburban population densities in Table II-25 are the averages for the entire route. An analogous calculation can be made for each state traversed. However, in neither case can one determine beforehand exactly where the truck will stop to refuel. In some cases (e.g., INL to Skull Valley) the truck may not stop at all; the total distance from INL to the Skull Valley site is only 466.2 km. The route from Indian Point to ORNL illustrates another situation. This route is 1028 km long, and would thus include one truck stop, which could be in either a rural or a suburban area.

Comment [JRC47]: Do you suggest each state should be calculated?

Comment [JRC48]: Does this explain the 0.0 value in the table?

Comment [JRC49]: OK, but what is the significance here?

II.5.4.4 Occupational Doses

Occupational doses from routine, incident-free radioactive materials transportation include doses to truck and train crew, railyard workers, inspectors, and escorts. Workers who handle spent fuel containers in storage, loading and unloading casks from vehicles or during intermodal transfer are not addressed in this analysis. Truck refueling stops in the U.S. no longer have attendants who refuel trucks.[3] Gas station and truck stop workers are in concrete or brick buildings and would be shielded from the radiation with the same shielding as in urban housing (83% shielded).

Table II-26 summarizes the occupational doses.

Table II-26. Occupational doses per shipment from routine incident-free transportation

Comment [JRC50]: Why shift from route based results to unit factor (shipment) results?

Cask and route type	Train crew : 3 people; person-Sv	Truck crew 2 people; person-Sv	Escort: Sv/hour	Inspector: Sv/hour per inspection	Truck stop worker: Sv per shipment	Rail classification yard workers: person-Sv
Rail-Pb rural/suburban	5.4E-09		5.8 E-06			1.5E-05
Rail-Pb urban	9.1E-08		5.8 E-06			
Rail-All Steel rural/suburban	4.1E-09		4.4 E-06			1.1E-05
Rail-All Steel urban	6.8E-09		4.4 E-06			
TRUCK - DU rural/suburban		3.8E-09	3.2E-09	3.2E-09	2.0E-09	
TRUCK - DU urban		3.6E-09	3.2E-09			

II.6 Interpretation of Collective Dose

Collective dose is essentially the product of an average radiation dose and the number of people who receive that average dose. Together with the linear non-threshold theory (BEIR VII, 2006, p.16), collective dose provides a method to estimate the number of "health effects," cancer in particular, that will occur in a group of people. The following example – a state suburban segment on a particular route – is typical of all routes in all states; only the specific numbers change.

[3] The State of Oregon still requires gas station attendants to refuel cars and light duty vehicles, but heavy truck crews do their own refueling.

Deleted: crew do

The following parameters characterize a particular segment of the Maine Yankee-to-Hanford truck route: the suburban segment through Illinois:

- Route segment length: 73 km
- Suburban population density: 324 persons/km^2
- Area occupied by population along route: 0.800 km x 2 x 73 = 116.8 km^2
- Total suburban population exposed to the shipment = 37,800 people
- From Table II-13, the collective radiation dose to that population, from routine, incident-free transportation, is 1.0×10^{-5} person-Sv.
- U.S. background is 0.0036 Sv per year or 4.1×10^{-7} Sv per hour. At an average speed of 108 kph, the population is exposed for 0.675 hour.

The background dose sustained by each member of this population is 2.8×10^{-7} Sv for a total collective dose of 0.11 person-Sv. The total collective dose is thus 0.11001 person-Sv with the shipment , and 0.11 person-Sv without the shipment. Estimates of the collective radiation risk from shipments of spent fuel are only valid when compared to the collective risk to the particular population when there is no shipment.

Deleted: that

Comment [JRC51]: Isn't the estimate valid whether there is any comparison or not?