Applicant Response

In response to, 1c. Interpretation/Diagnosis – Understanding (comment pg. 12)

The applicant entered 18001 – C, Section C and performed all steps with the exception of directing pressurizer heaters to be placed in automatic. As quoted in the comment on page 12: "When the applicant reached step C8b to place heater in automatic, she stated that they were going to wait to place heaters in automatic". The examiner does not include that prior to the pressurizer pressure channel failure that letdown isolated due to a letdown line break that required excess letdown to be placed in service. With letdown isolated this will cause pressurizer level to rise until some form of letdown is placed back in service. Once excess letdown was in service pressurizer **level** was trending back to program. Although level was trending downward to program, pressurizer level still had a greater than 5% deviation. When pressurizer **level** is greater than 5% the pressurizer level system causes the heaters to energize (to preheat any cold water entering the pressurizer- anticipating an insurge of cold water).

This is an example of the NRC examine teams issues with the timing of the simulator malfunctions, if the intent was to grade the applicant on completing the AOP actions and returning systems to automatic control (must conclude that this was the objective since points were deducted) then more time must be allowed. When time compression is used to complete the required simulator scenarios then individual actions that may be altered due to this compression should not be used to penalize a candidate(*).

When the crew received the pressurizer pressure channel failure, 18001-C was entered. Step C4 which is a continuous action step – states to: Control PZR pressure using heaters and sprays - Between 2220 and 2250 psig. If the applicant would have directed the heaters to be returned to automatic it would cause the heaters to energize (Due to PZR level deviation) causing the crew to have a parameter outside the requirements of the procedure ***(note; that based on the NRC examiners logic related to the point deduction for T_{avg} control he would have again deducted points either way leaving no correct response for the candidate)***. Although spray would also energize they would not respond until 2260 psig which is 10 psig greater than the procedures guidance. The applicant explained to the examiner that the heaters were impacted by two systems that were currently applicable. The applicant was concerned about staying within the bounds of procedure guidance. Because pressurizer level would soon be within 5% the crew would wait until that time to return the heaters to automatic. Per 18001-C when all steps are completed to select an unaffected channel the procedure does not lead the performer to return to the procedure step in effect until the failure is repaired and surveillances are complete. This means that the procedure is still in progress and the continuous action step is still in effect.

In addition, it should be noted that with CVCS letdown isolated and VCT makeup in progress it is preferred to energize the Pressurizer heaters for mixing to establish the required conditions in the event of a out-surge from the Pressurizer. The action to manually energize the Pressurizer heaters should be considered a positive as opposed to negative action under these circumstances. These actions would be covered by the following procedure all which would be applicable in this condition (all of which were part of the frozen references in the exam package provided to the NRC testing team).

LACK OF ABILITY/KNOWLEDGE

The applicant understood the pressurizer **pressure** control system as well as the impact of the pressurizer **level** control system. It is unclear how the applicant is penalized for taking into consideration that two systems impacted the heaters.

(*) As stated below in APPENDIX D , NRC "SIMULATOR TESTING GUIDELINES"

(1) A well-crafted scenario should flow from event to event, giving the operators sufficient time in each event to analyze what had happen, evaluate the consequences of their action (or inaction), and assign a priority to the event given the existing plant conditions.

(2) Each event description should include when it is to be initiated (e.g. <u>BY SIGNAL OF THE LEAD EXAMINER/EVALUATOR</u>, timeline, or plant parameter). Discussion with the simulator operators during the NRC exam revealed that option number one above was utilized BY SIGNAL OF THE LEAD EXAMINER / EVALUATOR in each of the scenarios. In addition, the pace at which malfunctions are entered can adversely affect the way an operator or crew responds. Too short a time between malfunctions may mask the effects of a particular malfunction and divert the operator's attention. <u>This cuts short the observers ability to evaluate the operators response to the earlier malfunction and may be prejudicial to a fair evaluation.</u>

Unit Operating Procedure 12004-C:

> NOTE
>
> This Section is to be used for controlling PRZR pressure during Pressurizer heater testing, Chemistry sampling and RCS Borations/Dilutions.

4.3.5 PRZR Manual Pressure Control for Testing, Sampling and Cb Adjustments

4.3.5.1 **Trend** PRZR pressure using IPC point UV-0481. _____

4.3.5.2 **Verify** PRZR SPRAY VALVE 1/2PIC-455B AND 1/2PIC-455C in AUTO _____

> NOTE
>
> The effects on PRZR pressure are faster acting when heaters are de-energized than when heaters are energized.

> **CAUTION**
>
> Due to the effects on Reactivity, at or near 100% Rx power PRZR pressure should be maintained as close as possible to 2235 psig.

4.3.5.3 As PRZR heaters are **energized** AND **de-energized, maintain** PRZR pressure 2235 ±10psig using 1/2PIC-455A PRZR PRESS CONT (Master Controller)

a. **Energize** AND **de-energize** PRZR backup heaters as applicable for the evolution being performed:

PRZR HTR BACK-UP GR A	1/2HS-10469A	_____
PRZR HTR BACK-UP GR B	1/2HS-10470A	_____
PRZR HTR BACK-UP GR D	1/2HS-10472	_____

b. **Maintain** PRZR pressure _____

To **lower** PRZR pressure use the up arrow.

To **raise** PRZR pressure use the down arrow.

c. **Return** 1/2PIC-455A to AUTO after each adjustment. _____

4.3.5.4 WHEN **directed** by the SS to **return** PRZR pressure control to normal configuration, **verify**:

a. All backup heaters are in AUTO.

- 1/2HS-10469A _____
- 1/2HS-10470A _____
- 1/2HS-10472 _____

b. All backup heaters have GREEN lights LIT.

- 1/2HS-10469A _____
- 1/2HS-10470A _____
- 1/2HS-10472 _____

c. **Verify** 1/2PIC-455A PRZR PRESS CONT (Master Controller) is at ≈25% demand. _____

d. **Verify** PRZR Pressure is stable at 2235 psig. _____

e. **Verify** 1/2-PIC-455A in AUTO. _____

Standard Operating Procedure 13009-1

4.6.2.24 **Operate** the Pressurizer Back-up Heaters as necessary to equalize C_b between the RCS and the Pressurizer. _____

WINDOW C01

ORIGIN	SETPOINT	
1-LT-0459 1-LT-0461	5% above level program	PRZR CONTROL HI LEVEL DEV AND HEATERS ON

1.0 PROBABLE CAUSE

1. Pressurizer Level Control System malfunction.
2. Charging-Letdown System malfunction.
3. Rapid reduction in secondary steam demand.

2.0 AUTOMATIC ACTIONS

Pressurizer Backup Heaters energize.

3.0 INITIAL OPERATOR ACTIONS

Check pressurizer level using 1-LR-0459 recorder and if a Pressurizer Level Control System malfunction is indicated, **initiate** 18001-C, "Primary Systems Instrumentation Malfunction".

4.0 SUBSEQUENT OPERATOR ACTIONS

IF Pressurizer Level Control System is not correcting level, **take manual control** and **adjust** as required.

5.0 COMPENSATORY OPERATOR ACTIONS

NONE

C. FAILURE OF PRZR PRESSURE INSTRUMENTATION

ACTION/EXPECTED RESPONSE	RESPONSE NOT OBTAINED
IMMEDIATE OPERATOR ACTIONS	
__C1. Check RCS pressure - STABLE OR RISING.	C1. Perform the following: __• Close spray valves. __• Close affected PRZR PORV. __• Operate PRZR heaters as necessary.
SUBSEQUENT OPERATOR ACTIONS	

CAUTION

Failure of the controlling channel may saturate the Master Pressure Controller and cause inadvertent operation of the spray valves during recovery.

__C2. Check controlling channel - OPERATING PROPERLY.	C2. Perform the following: __a. Place HS-455A in close. __b. Place PRZR spray valve controllers in manual.
__C3. Initiate the Continuous Actions Page.	
__*C4. **Control PRZR pressure using heaters and sprays - BETWEEN 2220 AND 2250 PSIG.**	
__C5. Check PIC-455A Pressurizer Master Pressure Controller - IN AUTO WITH OUTPUT SIGNAL APPROXIMATELY 25%.	__C5. Place PIC-455A in manual and adjust controller output to approximately 25%.

C. FAILURE OF PRZR PRESSURE INSTRUMENTATION

ACTION/EXPECTED RESPONSE	RESPONSE NOT OBTAINED
__C6. Check affected channel selected on PS-455F PRZR PRESS CNTL SELECT.	__C6. Go to Step C8.
__C7. Select unaffected channels on PS-455F:	

Failed Channel	Select
P455	CH457 / 456
P456	CH455 / 458
P457	CH455 / 456
P458	CH455 / 456

C8. Perform the following:	
__a. Check PRZR pressure - STABLE AT APPROXIMATELY 2235 PSIG.	__a. Adjust PRZR pressure to approximately 2235 psig using PRZR heaters and sprays.
__b. Place PRZR heaters in AUTO.	
__c. Place PRZR spray valve controllers in AUTO.	
__C9. Place PORVs in AUTO and verify proper operation.	C9. Perform the following:
	__a. Close any open PORV.
	__b. Return to Step C8.
__C10. Return PRZR pressure Master Controller to AUTO.	
__C11. Select same channel on PS-455G PRZR PRESS REC SEL as selected on PS-455F.	

C. FAILURE OF PRZR PRESSURE INSTRUMENTATION

ACTION/EXPECTED RESPONSE	RESPONSE NOT OBTAINED
__C12. Check P-11 status light on BPLB indicates correctly for plant condition within one hour.	
__C13. Notify I&C to initiate repairs.	
__C14. Bypass the affected instrument channel using 13509-C, BYPASS TEST INSTRUMENTATION (BTI) PANEL OPERATION, if desired.	
__C15. Trip the affected channel bistables and place the associated MASTER TEST switches in TEST position per TABLE C1 within 72 hours. (TS 3.3.1 & 3.3.2)	
C16. Initiate the applicable actions of: __• TS 3.3.1 __• TS 3.3.2 __• TS 3.4.1	
__*C17. **Check repairs and surveillances - COMPLETE.**	*C17. Perform the following: __a. WHEN repairs and surveillances are complete, THEN perform step C18. __b. Return to procedure and step in effect.

C. FAILURE OF PRZR PRESSURE INSTRUMENTATION

ACTION/EXPECTED RESPONSE — RESPONSE NOT OBTAINED

C18. Perform the following:

__a. Return tripped bistables to NORMAL position.

__b. Return MASTER TEST switch to NORMAL position.

__c. Return PS-455F to desired position (CH455/456 normal position).

__d. Select PS-455G to controlling channel (per PS-455F position).

__C19. Return to procedure and step in effect.

° END OF SUB-PROCEDURE TEXT

FIGURE 1

Sheet 1 of 1

PRESSURIZER PRESSURE CONTROLLER BAND

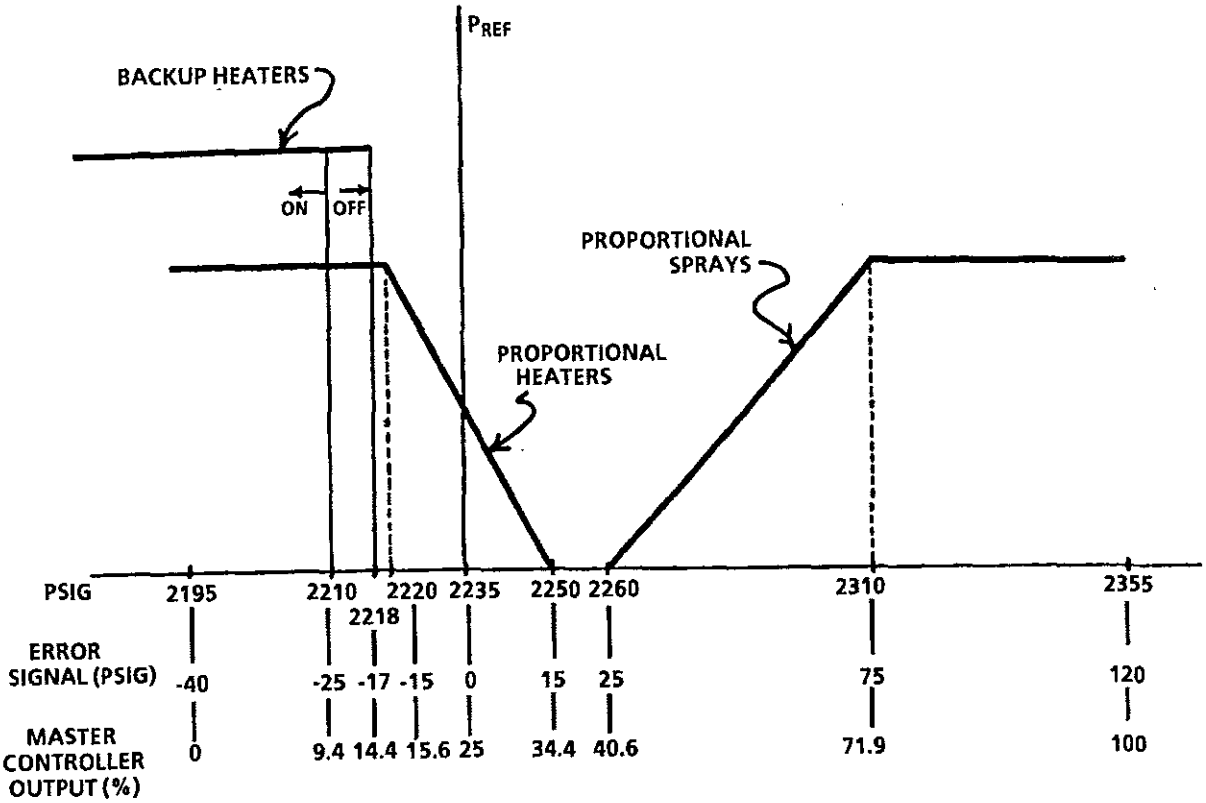

Pg. 12 response:

Carla (SRO) directed me (RO) to place heaters in Auto per step C8.b. I discussed with Carla that this would take pressure out of the band established in the continuous action step C4 due to pressurizer level being greater than 5% of program level which would cause all of the backup heaters to energize:

C4. Control PRZR pressure using heaters <u>and</u> sprays - BETWEEN 2220 AND 2250 PSIG.

After a discussion Carla instructed me to maintain pressurizer pressure IAW the continuous action step while allowing pressurizer level to return to program. Pressurizer level was out of band due to a previous failure and subsequently placing excess letdown in service. Pressurizer level was trending slowly to program at this time.

CHAPTER 16

PRIMARY SYSTEMS

TABLE OF CONTENTS

SECTION L DIGITAL METAL IMPACT MONITORING SYSTEM

LCO 3.3.1 Function 10b. **Reactor Coolant Low Flow Two Loops (Rx Trip)**

3 channels per loop are required to be operable.

Applicability: Mode 1 above P-7 interlock (10% power)

Bases:

The Reactor Coolant Low Flow (two loops) trip function ensures that protection is provided against violating the DNBR limit due to low flow in two or more RCS loops. Below the P-7 interlock all reactor trips on low flow are automatically blocked because power is not high enough to cause a DNB concern.

REFERENCES

- P&ID 1X4DB111
- FSAR Chapter 7
- Technical Specification

SECTION H

PRESSURIZER LEVEL CONTROL

16-56 CONTROL FUNCTIONS AND INTERLOCKS

The function of the Pressurizer Level Control System is to maintain a constant mass in the RCS for all operating conditions (Tavg 557°F to 586.4°F). Since the volume of coolant increases as Tavg increases, the programmed level set point rises from 25% at no load Tavg of 557°F, to 60% for Tavg of 588.4°F. Since program level is based on Auctioneer high Tavg, at 100% power, program level is set to 57.8%, due to full load Tavg being 586.4°F. The Pressurizer Level Protection System protects the pressurizer from becoming water solid or from completely draining during plant operation.

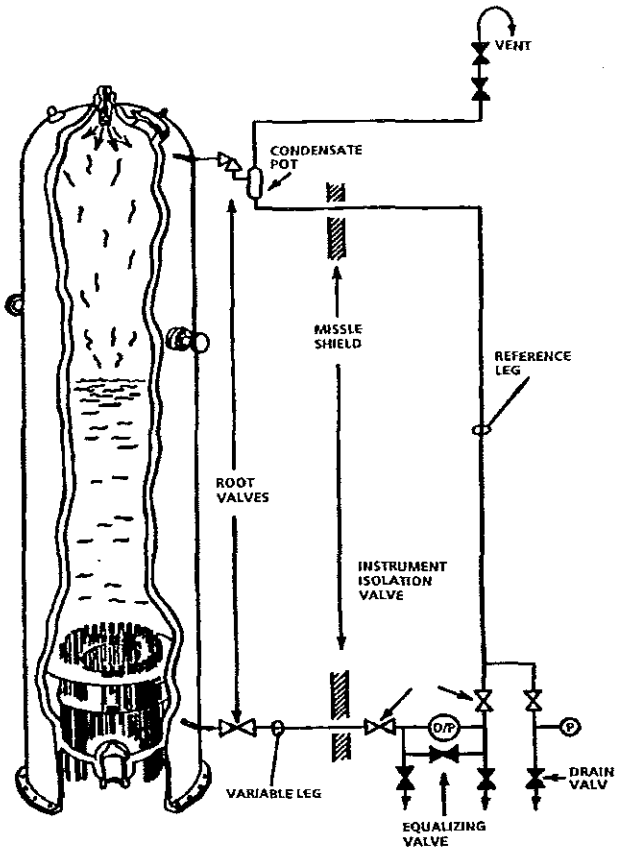

16-57 Pressurizer Level Instrumentation

The Pressurizer System uses four differential pressure (ΔP) transmitters to sense water level in the pressurizer. The transmitters send a level signal to control room indicators, alarms, and protection and control circuits. All four pressurizer level detectors use the same principle of operation.

Each level instrument is made up of a closed reference leg, a differential pressure (ΔP) transmitter, and a condensing pot. The ΔP transmitter compares water level pressure of the reference leg to the water level pressure in the pressurizer. The condensing pot is located on top of the reference leg and acts as a collection point for condensation. The condensing pot, which is located on the top of the reference leg, ensures that under normal steady state conditions the reference leg remains full of water in order to correctly indicate pressurizer level. The steam from the pressurizer enters the reference leg condensing pot. The condensing pot is not insulated which causes the steam to condense when cooled by containment ambient temperature. The condensate pot also seals the reference leg from the hydrogen gas in the pressurizer vapor space, which might give erroneous level indications if allowed to mix with the water in the reference leg. To minimize the penetrations made in the pressurizer, the reference legs are shared by other instruments. Unwanted actuations could occur if proper planning is not performed before draining the common reference legs. (Reference drawing 1X4DB112)

During normal operation and when the plant is in hot standby condition, Level Transmitters LT-459, LT-460 and LT-461 are used to provide pressurizer level information. These three instruments are known as "hot calibrated instruments". These transmitters are calibrated for the normal operational conditions and take into consideration the fact that the reference leg water temperature is close to the containment ambient temperature of 90°F, and the pressurizer liquid temperature of 653°F. These temperatures produce a relatively constant difference in density, and therefore different head pressures felt by the detectors. As the plant is cooled down, however, the level indicated by these instruments becomes less accurate and appears to be higher than the actual level. Level Transmitter LT-462 is calibrated for cold plant conditions and is used when heating up or cooling down the plant. Unlike the hot calibrated level instruments, the cold calibrated level instrument is calibrated assuming that the water in the pressurizer is at a lower temperature and more dense. When the water is cooler, it exerts more force (pressure) on the level transmitter than an equal level of water in the pressurizer under high temperature conditions.

It is important to understand the principles of operation and the limitations of these levels transmitters.

ΔP type level transmitters that are calibrated for normal operating conditions may be inaccurate under abnormal conditions such as a LOCA or steam line break in the containment. Specifically, the reference leg piping and condensing pots are exposed to the containment atmosphere. At elevated containment temperatures, the reference leg pipe and the water it contains will heat up, decreasing the density of the reference leg. This causes the indicated level to be greater than the actual level. As the reference leg is heated up, the volume of the water in the reference leg increases and forces some of the liquid from the reference leg. The pressure that the reference exerts on the level transmitter is less than the pressure that the water exerted prior to being heated up. The result is an indicated change in level (increase) although the actual level may not have changed. The severity of the error will depend on the actual containment conditions. Redundant level channels of the pressurizer may uniformly present inaccurate indications and, under such conditions, must be considered unreliable. Other conditions that may affect pressurizer level indication are reference leg leaks or partial draining due to instrument calibration or other maintenance activities, and a phenomena caused by hydrogen gas coming out of solution in the reference leg. Since the reference leg temperature is cooler than the pressurizer, it has a higher affinity for absorbing hydrogen gas. The hydrogen gas could come out of solution during transients. The results from all of the above mention would be reduction in the ΔP. This reduction in ΔP would cause the pressurizer level indication being higher than actual.

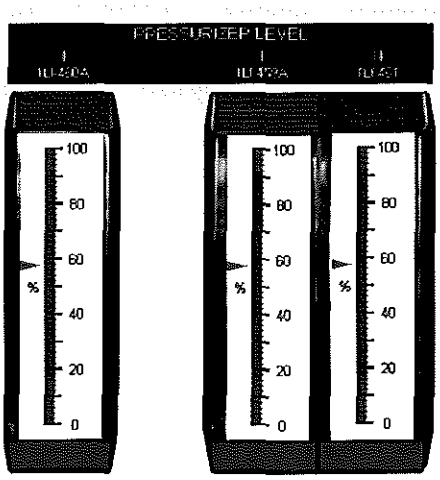

16-58 Pressurizer Level Control System

The Pressurizer Level Control System utilizes three hot calibrated level channels (LT-459, LT-460, and LT-461) for control. Two of these channels are selected at any given time by a three-position selector switch (LS-459D). The possible combinations are: Channels LT-459 and LT-460, Channels LT-461 and LT-460, or Channels LT-459 and LT-461. Only channels LT-459 and LT-461 can be selected for primary level control and only channels LT-460 and LT-461 can be selected for secondary control. The pressurizer level control uses the primary channel input to compare its value to the calculated level set point to control pressurizer level. The secondary channel is used for protection only. A three-position recorder selector switch (LS-459E) is provided to select the actual level to be recorded along with the program level on LR-459.

The reference level signal is generated by auctioneered high Tavg (No-load Tavg 557°F, to 100% Full Power Tavg of 586.4°F) which generates a program level of 25% to 57.8%, which corresponds to the difference between No-load Tavg and full load Tavg. The program level is compared to one of the selected level channels, LT459 or LT461, to produce a level error signal.

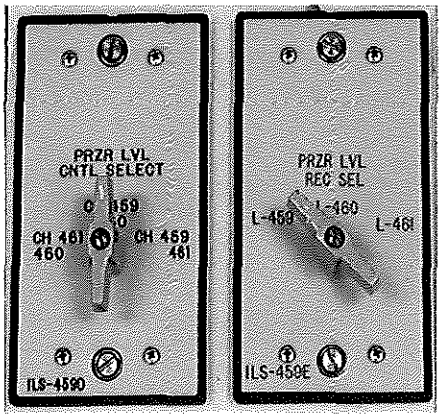

The level error produced is used as input by the master level controller. The master controller is sensitive to both the magnitude of the difference and the time duration that the difference is present. A large level error will result in a large controller output. The integral portion of the controller will also produce a high output for small errors that are present for long time durations. To change the level in the pressurizer, either the temperature or the mass balance of the RCS must change. The master controller responds to level errors by changing CVCS charging flow.

During steady state operation with no pressurizer level change, CVCS letdown flow is equal to CVCS charging. If charging flow changes and letdown flow remains constant, then the mass balance of the RCS will change. Pressurizer level control operates on this principal. Charging flow is varied by controlling the position of the flow control valve (FCV-121).

The demand signal from the level master controller (LIC-459) is sent to the charging flow controller (FIC-121). The charging flow controller compares demand flow from the pressurizer level master controller with actual flow. If there is a difference between the two, the controller will position FCV-121 accordingly to correct the error. Both controller MANUAL/AUTO stations are located on the "C" panel in the control room.

The Pressurizer Level Control System will automatically isolate CVCS letdown when pressurizer level decreases to 17%. Both letdown isolation valves, LV-459 and LV-460, close as well as the letdown orifice isolation valves. This prevents draining the pressurizer if a leak occurs in CVCS system. Damage would occur if the heaters were energized and not fully immersed in water. Therefore, the level control system also de-energizes the pressurizer heaters when the water level decreases to 17%. This prevents damage to the wall of the pressurizer vessel due to overheating and to the heaters themselves. The heaters would be exposed if the pressurizer level decreased below 14%. (See Pressurizer Level Control Logic Drawing) The pressurizer Level control system is designed to accommodate the following without a reactor trip:

a. Ramp unloading rate of 5% per minute with auto rod control.

b. Instantaneous load reduction of 10% with auto rod control.

c. Step load reduction of 50% with both auto rod control and steam dump control.

Level control selector switch LS-459D

To further explain its operation the following example is given:

Level transmitter 459/460 is selected on LS-459D

LT-459 is selected as the primary channel for the master level control. If the level that is sensed by LT-459 drops to ≤ 17% it will cause the following to occur:

a. CVCS Charging Flow increases by opening FCV-121

b. All pressurizer heaters will automatically trip.

c. CVCS Letdown Isolation valve LV-459 will automatically close.

d. All three CVCS Letdown Orifice Isolation valves will automatically close.

LT-460 is selected for the secondary channel. If level sensed by LT-460 drops to ≤ 17% it will cause the following to occur:

a. All Pressurizer heaters will automatically trip.

b. CVCS Letdown Isolation valve LV-460 will automatically close.

c. All three CVCS Letdown Orifice Isolation valves will automatically close.

If the primary level control channel sense pressurizer level ≥ 5% above program pressurizer level, a signal is generated that energizes the pressurizer backup heaters. Alarm ALB11-C01 "Przr Hi Level Dev and heaters on" annunciates. The purpose for this design is to heat the in surge of water to saturation in anticipation of a possible sudden out surge to maintain pressurizer pressure. Typical pressurizer temperatures are as follows:

- Pressurizer Surge Line Temperature ~ 645°F
- Pressurizer Liquid Temperature ~ 650°F
- Pressurizer Steam Space Temperature ~ 650-655°F

This example applies to all possible selections on LS-459D.

16-59 Pressurizer Level Protection System

The Pressurizer Level Protection System also utilizes the same level transmitters as the Control System. The level indications provide the information to the Reactor Protection System (RPS). The Reactor Protection System will automatically trip the reactor if the pressurizer level reaches a high level set point of 92% when the reactor is above 10% power. This function however looks at all three level channels and is not based on the switch position of LS-459D. Reactor trip will occur if two out of the three level transmitters are indicating ≥92%. This Reactor trip function protects the RCS from the over pressurization

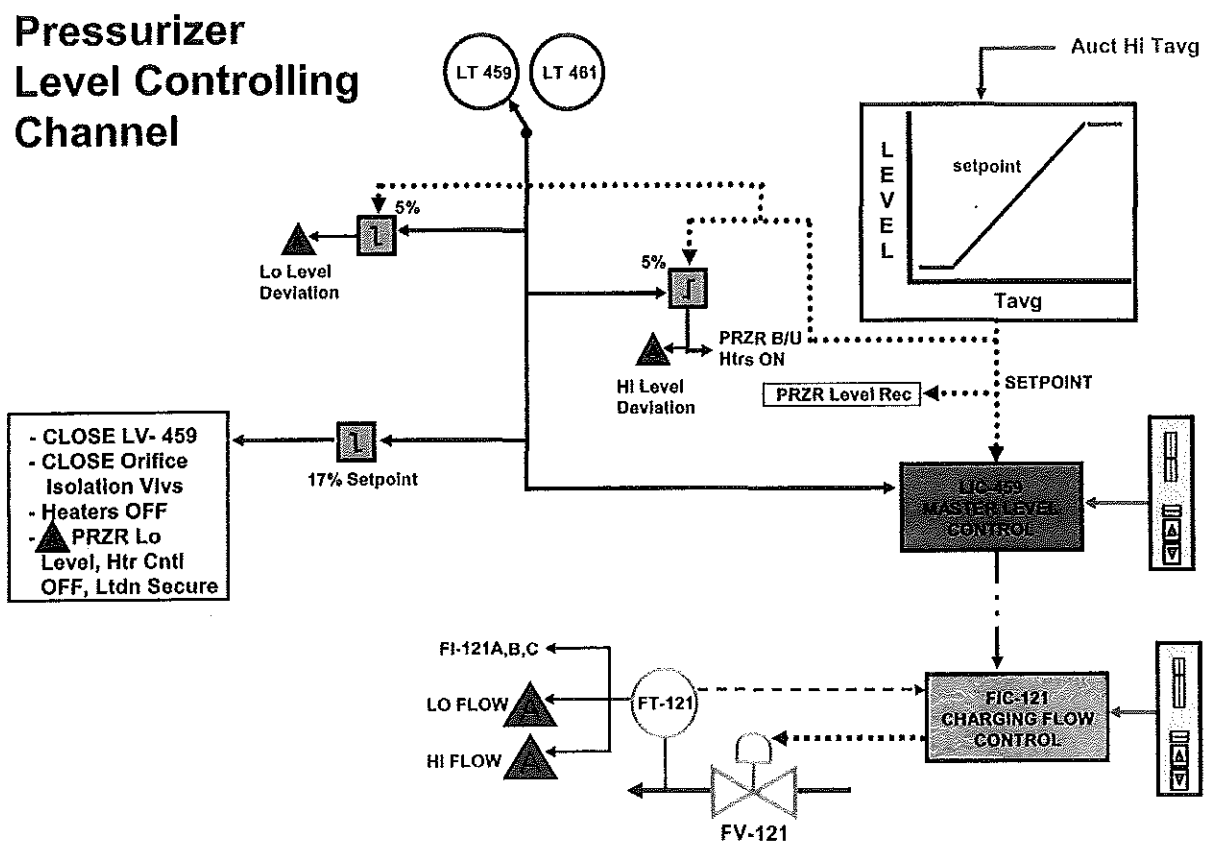

that might occur if the pressurizer were to go water solid (Loss of bubble). When the plant is shut down, the pressurizer is cooled down and is allowed to go water solid. The high level trip is automatically disabled by the RPS trip permissive P-7, which happens when the reactor power decreases to <10%.

SECTION I

PRESSURIZER PRESSURE CONTROL AND PROTECTION

16-60 Pressurizer Pressure Control System

The purpose of the Pressurizer Pressure Control System is to maintain RCS pressure at 2235 psig for normal power operation. This prevents the reactor coolant from boiling in the RCS and limits the transient fluctuations of pressure so that the pressure does not exceed the design limitations of the system. The pressurizer pressure control system is designed to respond to both under pressure and over pressure conditions that may occur.

The pressurizer pressure control system uses four narrow-range pressure channels (PT-455, PT-456, PT-457, and PT-458) for control. The transmitters for these pressure channels use the same reference legs as the level channels.

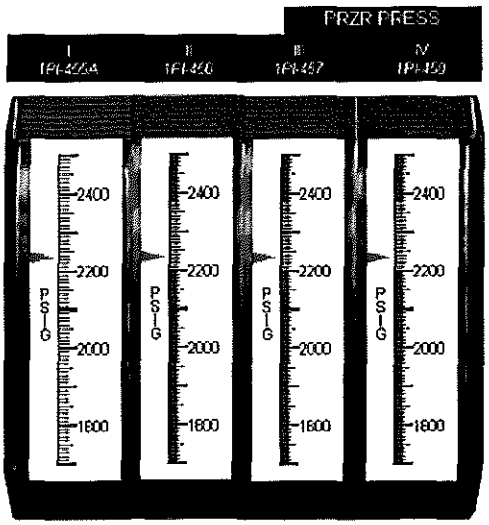

Two channels are selected at any given time using a three-position selector switch (PS-455F). The possible switch selections are as follows:

- channels PT-455 and PT-456 or
- channels PT-457 and PT-456 or
- channels PT-455 and PT-458

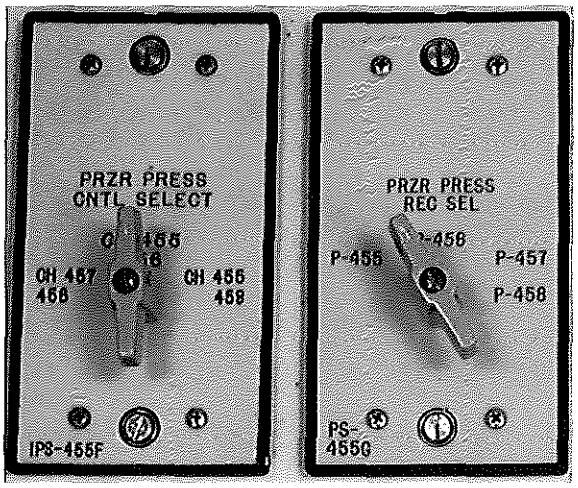

During plant operations, the pressurizer has a mixture of saturated water and steam. Approximately 60% of the total pressurizer volume is water and approximately 40% is steam at 100% reactor power. The pressurizer has heaters with a total heating capacity of 1800 kW. Backup heaters contain 1400 kW of the total capacity while the proportional heaters make up the remaining 400 kW. The backup heaters only have the capability of 0% or 100% output (i.e. on or off). However, the proportional heaters have a variable output range of 0 kW to 400 kW. The heaters are broken up into four groups depending on the power supply for each. They are supplied with 480 volts AC. Groups "A," "B," and "D" are identified as the "backup heaters". Group "C" is the proportional heaters. The backup heaters are used for large pressure changes in the pressurizer.

A decrease in RCS average temperature will result in an out surge from the pressurizer. As the water volume decreases the steam bubble expands to maintain pressure. The control heater current will increase as pressure decreases to add energy to the water and halt the pressure decrease. If pressure continues to decrease, the larger capacity backup heater banks will energize to add additional energy to the pressurizer water. This increase in energy to a saturated water volume will convert some of the water at the water-steam interface to steam. Remember, the specific volume of saturated steam is greater than that of the same temperature water. Since the steam volume expands faster than the water volume decreases, the net effect is to stop the pressure decrease. The heaters will continue to add energy to the water to return pressurizer pressure to normal conditions. As pressure rises, the backup heaters will turn off. As pressure continues to increase, control heater current will decrease to stabilize pressure at 2235 psig.

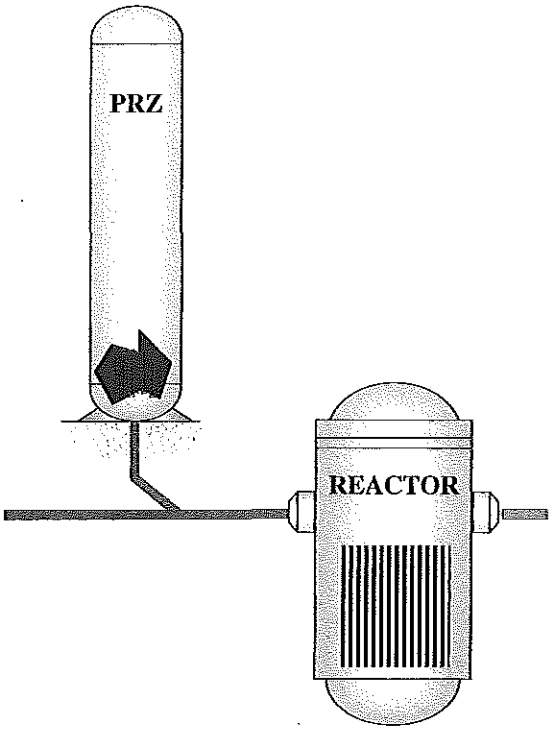

In surges into the pressurizer are more complex. An increase in RCS average temperature will cause an insurge into the pressurizer. This insurge will increase the pressure by compressing the steam bubble. This compression will cause some of the steam to condense. Since water has smaller specific volume than steam the pressure increase should be arrested. In addition, as pressure rises above 2235 psig, control group heater current decreases to reduce heat input into the pressurizer water. If the pressure increase continues, spray valves will open to spray cold leg water into the steam volume. This water, almost 100°F cooler than the pressurizer steam space temperature, will quench more of the steam bubble causing its volume to decrease rapidly. Since the steam volume decreases faster than the water volume increases from the insurge, pressurizer pressure will decrease. As pressure decreases, the spray valve will close and control group heater current will increase to stabilize pressure at 2235 psig. On large insurges, the relatively cooler water from the hot leg will decrease the pressurizer water temperature. This will tend to cool the water volume causing it to contract retarding the pressure increase. As the sprays respond to the increase in pressure caused by the insurge, the decrease in steam temperature coupled with the decrease in water temperature can result in pressure decreasing faster than the control and backup heaters can respond to arrest the decrease (there is a significant delay in the heat input from the heaters after they energize). To prevent large pressure decreases from an insurge, the backup heaters will energize if pressurizer level rises significantly. This action, in anticipation of the cool down expected from the insurge, reduces the time to feel the impact of the heaters in effect limiting the size of the pressure reduction.

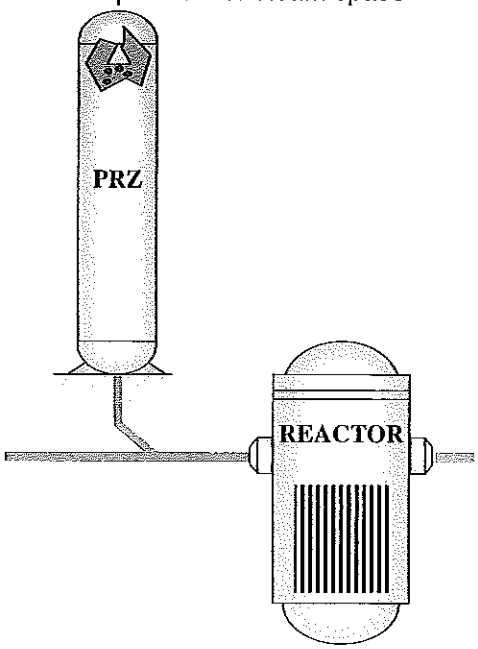

If the pressure transients exceed the capability of the pressurizer sprays, two power-operated relief valve (PORVs) will open. The PORVs are solenoid piloted steam operated valves that relieve to the PRT.

The pressurizer pressure control uses a master controller that compares actual pressurizer pressure from one of the selected pressure channels to the reference pressure of 2235 psig. If there is a difference, the

controller will energize the heaters or open the pressurizer spray. The master controller is a proportional plus integral controller. Because of this, its output is dependent on the magnitude of the difference and the integrated time that the difference is present.

Normally, the master controller has an output of approximately 25%, controlling pressure at 2235 psig. At 25% controller output, the proportional heaters are approximately 50% (200 kW) energized. This is necessary to account for the depressurizing effects from pressurizer bypass spray and ambient heat losses. As pressurizer pressure increases to 2250 psig, control heater power gradually decreases turning the proportional heaters off. As the error increases to 2260 psig, a controller output of 40.6%, pressurizer spray valves begin to open. If pressurizer pressure continues to increase, the spray valves will be fully open at 2310 psig with a controller output of 71.9%. Pressurizer pressure can be lowered manually by depressing the up arrow on PIC-455A (Pressurizer Master Pressure Controller) which will increase the controller output. This produces the same responses as the automatic control.

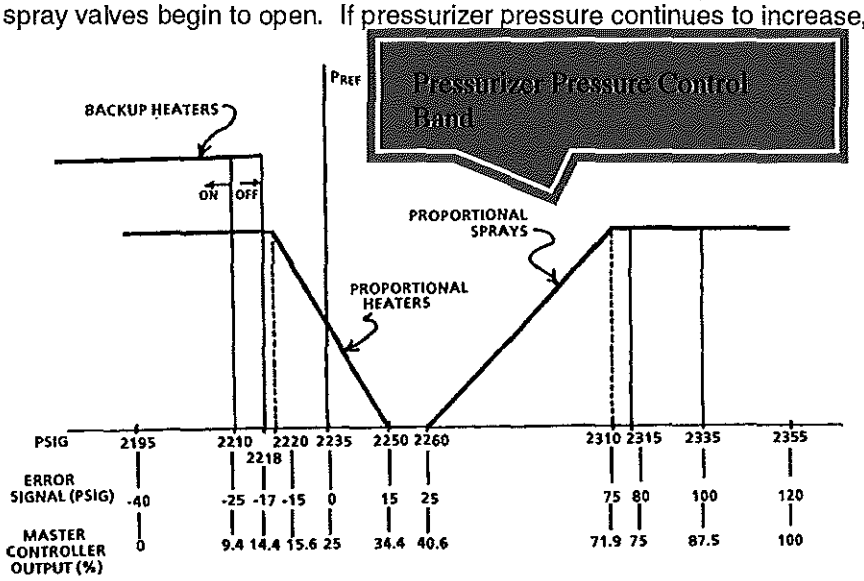

The controller output will decrease as pressurizer pressure decreases. As pressure decreases below 2235 psig, the controller output decreases below 25%. More power is supplied to the proportional heaters until they are fully energized at 2220 psig (controller output at 15.6%). If pressure continues to decrease, the backup heaters will energize at 2210 psig (9.4% output). When pressure returns to 2218 psig (14.4 percent output), the backup heaters de-energize. Pressurizer pressure can be raised manually by depressing the down arrow on 1-PIC-455A (Pressurizer Pressure Controller) to lower the controller output.

It is important to remember that the pressure set points discussed above may not be the exact set points that the respective pressurizer pressure control component will actuate. The integral portion of the master controller will modify the output signal for as the pressure error signal integrates (builds up). As the difference between the set point and actual pressure persists, the output of the controller continues to increase. In anticipation of the possible pressure transient that may occur, the pressurizer pressure controller actuates heaters and sprays before the pressure set points are reached.

Note that PORV PV-455 and PV-456 are not controlled by the master controller. PORV PV-455 responds to the primary pressure channel selected by PS-455F, (either PT-455 or PT-457). PORV PV-455 opens at 2345 psig and closes at 2325 psig. PORV PV-456 uses the secondary channel, (either PT-456 or PT-458) selected by PS-455F. PORV PV-456 opens at 2335 psig and closes at 2315 psig. However, it is important to note that the pressurizer control components will always energize or de-energize at the controller outputs discussed above. The master controller is also selected to control from PT-455 or PT-457 using hand switch PS-455F.

The pressurizer spray valves have separate controllers, one for each valve. These "slave controllers" are a proportional only controller and receive input from the master controller. The MANUAL/AUTO stations are located on the QMCB. Pressurizer Spray Valves can also be controlled from Shutdown Panel "A".

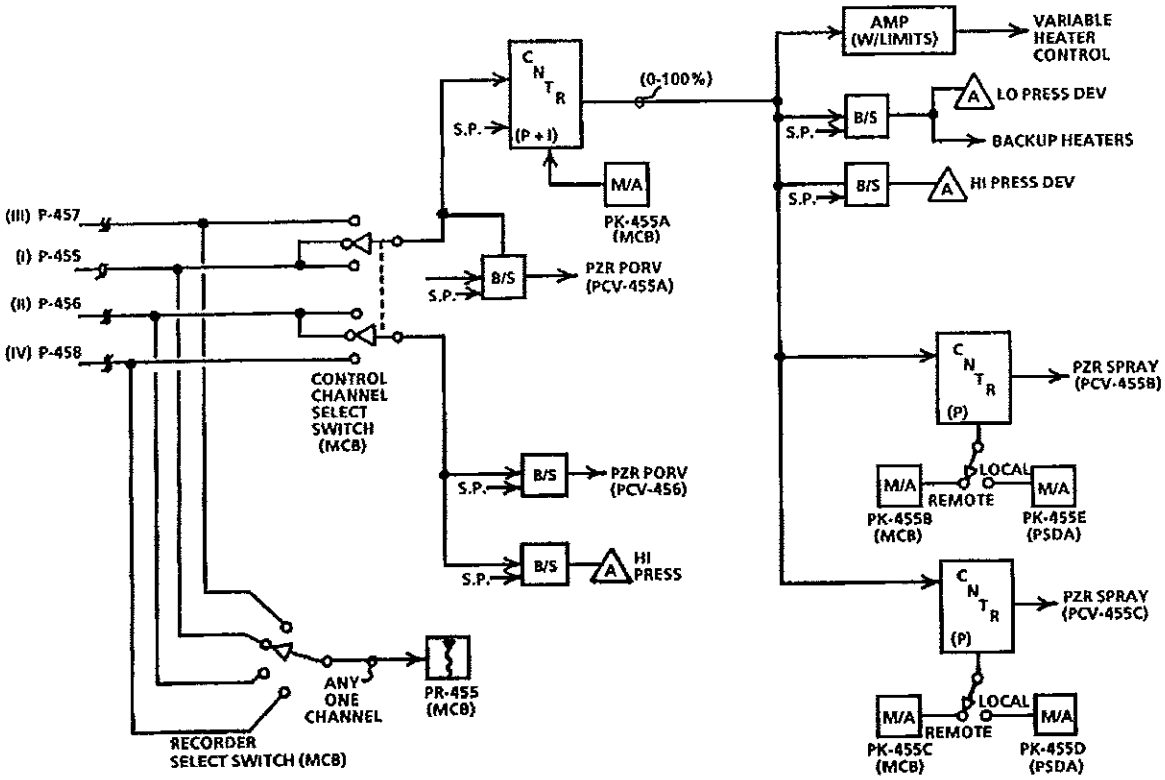

16-61 Pressurizer Pressure Protection System

The Pressurizer Pressure Protection System is designed to protect the pressurizer and RCS from overpressure and under pressure transients that the Pressurizer Pressure Control System is unable to correct.

The Pressurizer Pressure Protection System uses the same pressure channels as the Pressurizer Pressure Control System but is independent of the PS-455F. Pressurizer pressure information is supplied to the Reactor Protection System (RPS). The RPS will take appropriate safeguard actions to protect the plant when conditions warrant it. The RPS will not, however, take safeguard action based on one pressure channel. At least two channels must supply the same information before the RPS will act.

Pressurizer Pressure Protection System provides the following safeguard actions:

1. Pressurizer High Pressure Reactor Trip - 2/4 channels ≥ 2385 psig.

2. Pressurizer Low Pressure Reactor Trip - 2/4 channels ≤ 1960 psig > P-7 (> 10% power)

3. Pressurizer Low Pressure Safety Injection - 2/4 channels ≤ 1870 psig.

The pressurizer low pressure safety injection signal can be blocked (P-11) to allow for cool down and depressurization following a plant shutdown. This requires manual blocking at the P-11 set point of 2000 psig sensed by 2/3 channels. The permissive is automatically unblocked when pressure increases above 2000 psig and also sends a signal to open the SI accumulator outlet valves.

The pressurizer pressure protection system includes an interlock to close the PORVs and the block valves when 2/4 channels indicate a low pressure ≤ 2185 psig. This prevents depressurization from a failed open PORV.

INDICATIONS AND ALARMS

ALARM	SETPOINT
Przr. Heater Overload Trip (ALB11F03)	Breaker Trip
Przr. Vapor Hi Temp (ALB11E03)	667.5°F
Przr. Liquid High Temp (ALB11E05)	667.5°F
Przr. Surge Line Low Temp. (ALB11E05)	578°F
Przr. Spray Line Low Temp. (ALB11F05)	542°F
Przr. Relief Discharge High Temp (ALB12E01)	192 F
Przr. Safety Relief Discharge High Temp (ALB12F01)	192 F
Przr. Heaters In Local Control (ALB11F04)	CS-LR-Local
Przr. Lo Press SI Alert (ALB11A02)	1870 psig (1/4)
Przr. Lo Press and heaters on	2210 psig (1/2)
Przr. Rel Tank Hi Pressure (ALB12E02)	(8 psig)
Przr. Rel Tank Hi/Low Level (ALB12F02)	High 88% Low 57%
Przr. Rel Tank Hi Temp (ALB12E03)	115 F
Pressurizer Proportional Heater Trouble	Alarm Relay

Examiner's Comments

CROSS REFERENCE:

1.c: Interpretation/Diagnosis – Understanding

SCENARIO/EVENT:

Scenario 6, Event 4: Controlling Pressurizer Level Transmitter (LT-459) Failed Low

EXPECTED ACTION/RESPONSE:

The applicant, as Senior Reactor Operator (SRO), was expected to understand the impact of the LT-459 failure on charging flow and direct the crew to place the charging flow controller, FIC-0121, to manual prior to selecting an unaffected pressurizer level channel in accordance with procedure 18001-C, Section D, Failure of Pressurizer Level Instrumentation. Placing FIC-0121 to manual was necessary to avoid a rapid lowering of charging flow because pressurizer level had been above setpoint for several minutes due to the LT-459 failure, thereby causing the controller output signal (*i.e.* which would be "saturated") to demand less charging flow. It was expected that FIC-0121 remain in manual until the controller output signal would maintain charging flow at an acceptable level (*i.e.* until the controller "unsaturated"). Placing it back to automatic too soon would result in a rapid lowering of charging flow.

APPLICANT ACTION/RESPONSE:

The applicant initially directed placing the charging flow controller to manual prior to selecting an unaffected pressurizer level channel. However, after the Reactor Operator (RO) selected an unaffected pressurizer level channel, the applicant directed the RO to place FIC-0121 back to automatic before the controller was able to control charging flow at a rate that would provide adequate flow through the regenerative heat exchanger. Subsequently, charging flow rapidly lowered, at which time the RO placed FIC-0121 back to manual. The Unit Operator (UO) informed the applicant that he believed that FIC-0121 was failed. After the scenario, the examiner asked the applicant if there was a problem with FIC-0121. The applicant stated that the charging control valve was closing and that it should not have closed because pressurizer level was on program. The applicant was downgraded in this competency because she did not understand that charging flow would lower due to the controller's response to a high pressurizer level over several minutes.

The applicant made two non-critical errors in this rating factor; therefore, a score of "1" was assigned.

LACK OF ABILITY/KNOWLEDGE:

The applicant displayed a weakness in understanding plant system and component interaction.

POTENTIAL CONSEQUENCES:

The potential consequences of this error include flashing of letdown line fluid from liquid to steam due to the loss of cooling caused by the loss of charging flow. Flashing of the letdown line could lead to loss of letdown inventory via the relief valves and "water hammer" damage to the letdown piping system.

K/A (SRO IMPORTANCE RATING): 004K1.01 (4.0)

10CFR55.45(a)(2): Manipulate the console controls as required to operate the facility between shutdown and designated power levels.

Applicant Response

In response to, 1c INTERPRETATION/DIAGNOSIS – Understanding (comment page 14)

APPLICANT ACTION/RESPONSE

The examiner wrote in the EXPECTED ACTION/RESPONSE that the applicant was expected to:

1. Understand the LT 459 failure on charging flow
2. Direct the crew to place charging flow controller FIC-121 to manual prior to selecting the unaffected channel
3. Maintain FIC- 121 in manual until the controller output signal was "unsaturated"

The examiner writes in the APPLICANT ACTION/RESPONSE that the applicant directed placing the charging flow controller to manual prior to selecting an unaffected channel. He also states the applicant afterward directs the RO to place FIC -121 to automatic. The event description does not identify that when FIC-121 was initially placed in manual that the applicant identified to the crew members(prior to placing to manual) the impact of the controller staying in auto while selecting an unaffected channel and the response that would occur if the controller was not taken to manual ie, the lowering of the charging flow. This supports that the applicant understood the impact of the LT 459 failure on charging flow and that she directed the crew to place FIC-121 to manual prior to selecting an unaffected channel. The event description as written implies that the controller was immediately placed in automatic. The controller remained in manual for several minutes. The crew entered 18001-C, Section D and performed all the steps prior to placing the level control system back to auto. The applicant at that time (while FIC-121 was still in manual), called a crew briefing to discuss the current failure as well as the previous failure. (This was the second crew briefing performed -first briefing covered the first two failures). In fact, for evidence that this briefing occurred, see the comment on page 23 (Communication) – Where the applicant briefed the crew on the current status of FIC- 121. After the briefing FIC-121 was directed to be placed in **automatic** and another failure occurred at the same time (PT 508) on the secondary side. Note the timing of the failure.
The crew responded to the next failure at which time FIC-121 was closing. The applicant quickly directed that the crew place FIC 121 **back to manual** (which was the next step in the 18001-C procedure.

1. Step D9 in 18001-C states: Return PZR level control in Auto.
2. Step D10 IN 18001-C states: Check PZR level is maintained at program by auto control. If it is not the RNO states: **Maintain PZR level at program using manual control.**

FIC 121 was taken back to manual at which time it was under the control of the RO. The applicant then addressed the secondary failure. The events following this were entries into the AOP and EOP network, where any further discussions concerning FIC 121 were not likely to occur as the scenario was moving at a faster pace. After the scenario the examiner asked a question about FIC-121. The applicant describe what occurred, the examiner did not ask any follow-up questions to imply that he was looking for more details or that particular detail.

It is important to note that to determine when a controller with a 9000 second (15 minutes) time constant becomes unsaturated is always a try-and-see approach. As seen in the plant and simulator all the operator can do is establish the required control conditions, place the controller in automatic then monitor the controller response, this may take several attempts. It's also important to consider that the timing of the PT-508 failure may have distracted the crew and prevented the initial verification of the 1-FIC-0121 response.

LACK OF ABILITY/KNOWLEDGE

The applicant did not make an error in this scenario to justify a comment. Placing FIC-121 back to auto is directed per 18001-C. If it is not identified at the time that the controller is saturated the procedure's next step ensures that FIC-121 is operating properly. If, it is not operating properly (ie,.... saturated), The RNO ensures that it is taken back to manual.

Supporting Documentation

CROSS REFERENCE:

4.a: Communications – Clarity

SCENARIO/EVENT:

Scenario 6, Event 4: Controlling Pressurizer Level Channel LT-459 Failed Low

EXPECTED ACTION/RESPONSE:

The applicant, as Senior Reactor Operator (SRO), was expected to accurately state the status of FIC-0121 during the crew brief that was performed following plant stabilization.

APPLICANT ACTION/RESPONSE:

In response to LT-459 failing low, the applicant directed the Reactor Operator (RO) to place FIC-0121 in manual to control pressurizer level. However, approximately one minute later, the applicant stated during a crew brief that FIC-0121 was in automatic. The RO quickly corrected the communication error. The applicant was downgraded due to not clearly and accurately communicating the status of FIC-0121 to the crew.

The applicant made three non-critical errors in this rating factor; therefore, a score of "1" was assigned.

LACK OF ABILITY/KNOWLEDGE:

The applicant demonstrated a weakness in her ability to correctly communicate the status of FIC-0121 to the crew during a brief.

POTENTIAL CONSEQUENCES:

The potential consequences of not correctly communicating component status to the crew include incorrect operator actions and confusion as to actions that may be required.

K/A (SRO IMPORTANCE RATING): G2.1.17 (4.0)

10CFR55.45(a)(13): Demonstrate the applicant's ability to function within the control room team as appropriate to the assigned position, in such a way that the facility licensee's procedures are adhered to and that the limitations in its license and amendments are not violated.

D. FAILURE OF PRZR LEVEL INSTRUMENTATION

ACTION/EXPECTED RESPONSE	RESPONSE NOT OBTAINED
__D1. Initiate the Continuous Actions Page.	
__*D2. **Check PRZR level - TRENDING TO PROGRAM LEVEL.**	*D2. IF PRZR level instrument fails high, THEN perform the following as necessary: __ Adjust charging to prevent letdown from flashing. -OR- __ Isolate letdown. __ IF PRZR level instrument fails low, THEN maintain charging flow approximately 10 gpm greater than total seal injection flow.
__*D3. **Maintain Seal Injection flow to all RCPs - 8 TO 13 GPM.**	
__D4. Select an unaffected channel on LS-459D PRZR LVL CNTL SELECT.	
__D5. Select same channel on LS-459E PRZR LVL REC SEL as selected on LS-459D.	

D. FAILURE OF PRZR LEVEL INSTRUMENTATION

ACTION/EXPECTED RESPONSE	RESPONSE NOT OBTAINED
__*D6. **Restore letdown flow by initiating 13006, CHEMICAL AND VOLUME CONTROL SYSTEM, if required.**	*D6. Perform the following: __a. Establish Excess Letdown by initiating 13008, CHEMICAL AND VOLUME CONTROL SYSTEM EXCESS LETDOWN. __b. IF Excess Letdown can NOT be established, THEN initiate 18007-C, CHEMICAL AND VOLUME CONTROL SYSTEM MALFUNCTION. __c. Control charging to maintain PRZR level.
D7. Check if PRZR heaters should be restored to service: __PRZR level controlling channel - FAILED LOW.	__D7. Go to Step D9.
D8. Restore PRZR heaters to service: __a. Restore Control Heaters by placing HS-10471 in ON. b. Reset Back-up Heaters by placing control switches in OFF, then in AUTO: __• HS-10469A __• HS-10470A __• HS-10472	
__D9. Return PRZR level control to AUTO.	

Applicant performed crew Briefing at this point.

D. FAILURE OF PRZR LEVEL INSTRUMENTATION

ACTION/EXPECTED RESPONSE	RESPONSE NOT OBTAINED
__*D10. **Check PRZR level is maintained at program by auto control.**	__*D10. Maintain PRZR level at program using manual control.
__D11. Notify I&C to initiate repairs.	
__D12. Bypass the affected instrument channel using 13509-C, BYPASS TEST INSTRUMENTATION (BTI) PANEL OPERATION, if desired.	
__D13. Trip affected channel bistable and place associated MASTER TEST switch in TEST position per TABLE D1 within 72 hours. (TS 3.3.1)	
__D14. Initiate the applicable actions of Technical Specification 3.3.1.	
__*D15. **Check repairs and surveillances - COMPLETE.**	*D15. Perform the following: __a. WHEN repairs and surveillances are complete, THEN perform step D16. __b. Return to procedure and step in effect.

Step requiring manual Pressurizer control.

D16. Perform the following:

__a. Return tripped bistables to NORMAL position.

__b. Return MASTER TEST switch to NORMAL position.

__c. Return LS-459D to the desired position. (CH459/460 normal position.)

* Step 16 continued on next page

D. FAILURE OF PRZR LEVEL INSTRUMENTATION

ACTION/EXPECTED RESPONSE	RESPONSE NOT OBTAINED
__d. Select LS-459E to the controlling channel (per LS-459D position).	
__D17. Return to procedure and step in effect.	

˚END OF SUB-PROCEDURE TEXT

Control Board Operations

Results: Control Board Operations

Competency		weight	scores		grades	total	comment page No	
Control Board Operations						1.99		
	a. Locate and manipulate	0.34	1		0.34		pg 18, 19. 20	
	b. Understanding	0.33	3		0.99			
	c. Manual Control	0.33	2		0.66		pg 21	

Examiner's Comments

CROSS REFERENCE:

3.a: Control Board Operations – Locate & Manipulate

SCENARIO/EVENT:

Scenario 7, Event 1: Raise Power in Accordance With 12004-C, Power Operation (Mode 1)

EXPECTED ACTION/RESPONSE:

The applicant, as Reactor Operator (RO), was expected to make the required reactivity adjustments to maintain Tave within 2°F of Tref during a power ascension from 29%.

APPLICANT ACTION/RESPONSE:

Prior to commencing the power ascension, the Senior Reactor Operator (SRO) directed the applicant to maintain Tave within 2°F of Tref. However, the applicant allowed Tave to drop approximately 2.3 °F below Tref after the power ascension was suspended. Tave trended downward for approximately 40 minutes before reaching the maximum deviation of 2.3 °F, at which time the applicant withdrew control rods and brought Tave back within the directed control band. After the scenario, the applicant was asked to state the Tave/Tref control band provided by the SRO. The applicant stated 2 °F. The applicant was also asked to state the maximum difference between Tave and Tref prior to the reactor trip. The applicant stated 2.3 °F. The applicant was downgraded in this competency because her reactivity manipulations were not timely enough to maintain the control band provided by the SRO.

The applicant made three non-critical errors in this rating factor; therefore, a score of "1" was assigned.

LACK OF ABILITY/KNOWLEDGE:

The applicant demonstrated a weakness in her ability to make timely reactivity changes to maintain Tave within 2 °F of Tref as directed by the SRO.

POTENTIAL CONSEQUENCES:

The potential consequences of not maintaining parameters within control bands directed by the SRO could result in alarms and unnecessary operator actions that could distract the operator.

K/A (SRO IMPORTANCE RATING): 001A4.03 (3.7)

10CFR55.45(a)(3): Identify annunciators and condition-indicating signals and perform appropriate remedial actions where appropriate.

Applicant Response

In response to, 3a. Control Board Operation – Locate and Manipulate (comment on page 18)

APPLICANT ACTION/RESPONSE:

SRO directed the applicant to maintain T_{avg} within 2°F of T_{ref} for power ascension. Comment written by examiner states that the applicant allowed T_{avg} to drop approximately 2.3° F below T_{ref} after power ascension was suspended. The comment also stated that there was a downward trend for approximately 40 minutes before being corrected.

The description of the event does not identify that the applicant attempted on **two** occasions to adjust the deviation prior to reaching 2.3°F. Each time the applicant requested to withdraw control rods and was granted permission, a failure occurred (Malfunction was requested by the NRC Examiners) causing the SRO to suspend the rod withdrawal (Note; the timing of each failure is directed completely by the NRC lead examiner(*) with the concurrence of the other examiners and they are in direct communication with the simulator operator, if the intent was to remove grading points in this case a reasonable amount of time must be given to control RCS temperature and certainly giving direction to insert the next failure to prevent this control would not be appropriate). The first attempt was interrupted by the failure of the NSCW fan tripping and the second attempt to adjust the deviation was interrupted by a failure of a Pressurizer pressure channel (this failure resulted in the crew exiting Unit Operating Procedure and entering 18001 section C to address the condition. Each time the SRO identified that the failure would be addressed **first and once addressed the rod withdrawal would commence** (Note; below that NMP-OS-001 states all reactivity manipulations must be first approved by the SRO). It is also important to note that the applicant continued to update the SRO on the status of the temperature deviation. Once the failure was evaluated according to the Annunicator Response Procedure, Technical Specifications and Abnormal Operating Procedures the applicant was granted permission to adjust the deviation. The applicant at no time give any indication that she did not know the operating limits and how to properly make the required adjustment and would have performed the correct actions if given adequate time to respond as is required per the NRC testing guidelines in Appendix D.

NMP-OS-001

Station Standard (Procedure included in the frozen references sent to the NRC Examiners)

The SS will approve each reactivity manipulation.

(*) As stated below in APPENDIX D , NRC "SIMULATOR TESTING GUIDELINES"

(1) A well-crafted scenario should flow from event to event, giving the operators sufficient time in each event to analyze what had happen, evaluate the consequences of their action (or inaction), and assign a priority to the event given the existing plant conditions.

(2) Each event description should include when it is to be initiated (e.g. <u>BY SIGNAL OF THE LEAD EXAMINER/EVALUATOR</u>, timeline, or plant parameter). Discussion with the simulator operators during the NRC exam revealed that option number one above was utilized BY SIGNAL OF THE LEAD EXAMINER / EVALUATOR in each of the scenarios. In addition, the pace at which malfunctions are entered can adversely affect the way an operator or crew responds. Too short a time between malfunctions may mask the effects of a particular malfunction and divert the operator's attention. <u>This cuts short the observers ability to evaluate the operators response to the earlier malfunction and may be prejudicial to a fair evaluation.</u>

ABILITY/KNOWLEDGE

Applicant understood requirements to maintain 2 F t_{avg}/t_{ref} deviation. However applicant could not make adjustment with additional failures in progress as this would result in the SRO addressing simultaneous conditions that could lead to a potential human performance error. In addition positive Rx manipulations are not permitted without the permission of the SS or the use of a peer check.

POTENTIAL CONSEQUENCES

There were no consequences associated with the deviation because the SRO was updated on the status of the parameter and the crew did not receive a T_{avg}-T_{ref} Deviation alarm (setpoint was at 3F).

Supporting Documentation

6.3.3 As a minimum, the Specific Reactivity Management Practices contained in Attachment 2 will be followed.

6.3.4 Except when a Reactivity Management SRO is stationed per 6.4 of this procedure, the SS shall maintain direct supervisory oversight of reactivity manipulations. The SS will approve each reactivity manipulation, with the exceptions of transient conditions described in step 6.3.8 or when a Reactivity Management SRO is stationed per 6.4.

6.3.5 A reactivity brief shall take place at the beginning of each shift in modes 1 and 2. The reactivity brief should include expected reactivity manipulations during the shift needed to maintain current plant conditions or in the case of planned startups, shutdowns or power maneuvers the brief should include a discussion of reactivity changes that would be required to execute these power changes. In addition to this, the reactivity brief should include a discussion of pertinent current core reactivity parameters and any planned work activities that could potentially affect reactivity. The reactivity briefing sheet or OATC turnover sheet shall contain a list of degraded or out of service reactivity manipulation equipment.

6.3.6 When power reduction is necessary, only steam flow adjustments will be effective in reducing and maintaining reactor power below limits. While control rod insertion may appear to provide some immediate relief from high power conditions, the effects are temporary without reducing total steam flow and will only reduce nuclear instrument accuracy due to the resultant cooldown. Turbine load adjustments must be made to reduce and control reactor power, with control rods used primarily to maintain Tave on program during the power reduction. (PWR Only)

6.3.7 Peer checks will be used for reactivity changes, with the exception of conditions described in step 6.3.8.

6.3.8 During some plant operations, one or more of the various indications of reactor power may not be accurate. Therefore, control room operators should always monitor all indications of reactor power and maintain it within licensed limits.

6.3.9 Transient Conditions

6.3.9.1 During transient conditions that require a rapid reduction in reactor power, operators may take actions to insert negative reactivity that are outside the amounts discussed in the reactivity brief and without SS concurrence. Peer checking reactivity manipulations under these conditions is preferred but not required if there are no other licensed operators available during the manipulation. The SS shall be briefed as soon as possible on the amount of negative reactivity added (number of steps of rod insertion, amount of boron added (PWR Only), Recirculation Pump speed adjustments (BWR Only), etc.

6.3.9.2 The control room team shall not immediately dilute or withdraw control rods in an attempt to restore RCS Tavg/Tref deviations caused by a secondary plant transient. Attempts to immediately restore RCS Tavg/Tref deviations caused by a secondary plant transient can be aggravated by withdrawing control rods or reducing boron concentration with reactor power rising. . For the PWRs, once turbine load has been stabilized and RCS Tavg has been restored to within 3 degrees of Tref, positive reactivity can be added by withdrawing control rods.

6.3.9.3 The control room team shall not immediately withdraw control rods or raise Recirculation Flow in an attempt to restore reactor power or turbine throttle pressure caused by a secondary plant transient. Attempts to immediately restore reactor power or turbine throttle pressure caused by a secondary plant transient can be aggravated by withdrawing control rods or raising Recirculation Flow when reactor power is rising (BWR only).

6.3.9.4 During transients, independent methods of determining reactor power shall be used and correlated to validate accuracy. Following the transient condition, the SS and shift NPOs will evaluate the reactivity control status, discuss a recovery plan, and if possible consult other resources to determine an appropriate course of action. The recovery plan should include expected communication updates on reactivity conditions and reactor power/temperature management.

6.3.9.5 If at any time the reactor becomes sub critical unintentionally, as indicated by a -1/3 dpm startup rate or - 78 second period, the reactor should be shutdown. (Reference SOER 07-01, Recommendation 1)

6.3.10 Control Rod Movement

6.3.10.1 With the exception of transient conditions described above, rod manipulations shall be peer checked. The peer check should include a verbal confirmation of rod movement direction.

6.3.10.2 For plant Hatch, control rod movement will be in accordance with Hatch procedure 34GO-OPS-065-0.

6.3.10.3 For Farley and Vogtle:

When withdrawing control rods in MODE 1, the OATC shall stop rod withdrawal at least every three steps and check for expected response on NI's, DRPI, and reactor coolant temperature (i.e. pull and wait). This requirement may be suspended during evolutions that have adequate procedural direction and oversight during the withdrawal of the control rods (i.e. recovery of a dropped rod, rod control surveillances). It should be noted that many of the fuel-damaging events in the industry have resulted from misoperation of control rods. Careful monitoring of the rod control system is essential.

Peer check for rod manipulations should confirm placement of hand on rod motion switch in a manner that allows physical confirmation of intended direction of rod motion.

6.4 Reactivity Management SRO

6.4.1 During a plant start-up, at approximately 2% power, an additional active licensed SRO shall be dedicated to provide direct and intrusive oversight of reactivity manipulations allowing the SS to maintain the overall perspective of unit operation. A reactivity management SRO may also be stationed at the request of the Shift Supervisor during power maneuvers involving frequent reactivity manipulations.

Pg. 18 response:

During the scenario Carla (RO) kept me (SRO) informed of the TAVE/TREF Deviation and recommended several times to withdraw control rods beginning at a deviation of 1.7F. During those times there were failures present that I decided to prioritize over withdrawing control rods to maintain Tave in the established band. My responsibilities as Shift Supervisor require ensuring that there are no transients going on during reactivity manipulations and mitigating those transients prior to reactivity manipulations being performed, with the exception of maintaining Thermal Power within the licensed limit. Carla (RO) was not allowed to make any positive reactivity manipulation without approval from me (SS), and met station expectations through keeping me informed of the deviation and its trend while recommending withdrawing control rods.

NMP-OS-001 (Reactivity Management Program):

> 6.3.4: Except when a Reactivity Management SRO is stationed per 6.4 of this procedure, the SS shall maintain direct supervisory oversight of reactivity manipulations. The SS will approve each reactivity manipulation, with the exceptions of transient conditions described in step 6.3.8 or when a Reactivity Management SRO is stationed per 6.4.

Examiner's Comments

CROSS REFERENCE:

3.a: Control Board Operations – Locate & Manipulate

SCENARIO/EVENT:

Scenario 7, Event 6: RWST Sludge Mixing Line Pipe Break with Failure to Automatically Isolate

EXPECTED ACTION/RESPONSE:

The applicant, as Reactor Operator (RO), was expected to know the location of the RWST sludge mixing isolation valves' (1-LT-0991 & 1-LT-0990) handswitches, which were located on the control room back panel QPCP. As a result, the applicant was expected to assist the crew in locating and closing the sludge mixing isolation valves in a timely manner following annunciation of ALB06-E04, RWST LO LEVEL. The applicant was the RO, therefore, it was not expected that she leave her control boards to close the valves. However, it was expected that she recommend to the crew that those valves were located in the control room (and also modeled in the simulator) and that the automatic actions for those valves to close on low RWST level needed to be ensured.

APPLICANT ACTION/RESPONSE:

After receipt of ALB06-E04, the applicant did not recommend to the crew that they needed to ensure that the sludge mixing isolation valves, were closed. During this event the Unit Operator (UO) stated to the applicant that the sludge mixing valves should have closed on low RWST level, but the applicant did not recommend that the crew ensure that those control room handswitches be checked closed. The entire crew, including the applicant, allowed the RWST leak to continue for approximately 19 minutes when the only action required to isolate the leak was closing the control room handswitches for the sludge mixing isolation valves, which should have been verified closed as part of performing the alarm response procedure associated with ALB06-E04.

The applicant made three non-critical errors in this rating factor; therefore, a score of "1" was assigned.

LACK OF ABILITY/KNOWLEDGE:

The applicant demonstrated a weakness in locating the sludge mixing isolation valves' handswitches.

POTENTIAL CONSEQUENCES:

The potential consequences of not closing sludge mixing isolation valves was a reduction in RWST inventory available to cool the core following a safety injection, including a potential inability to achieve cold leg recirculation due to the depletion of RWST inventory.

K/A (SRO IMPORTANCE RATING): 006K4.24 (3.0)

10CFR55.45(a)(3): Identify annunciators and condition-indicating signals and perform appropriate remedial actions where appropriate.

Applicant Response

In response to, 3 a. Control Board Operations – Locate and Manipulate (comment on page 20)

APPLICANT ACTION/RESPONSE

Applicant acknowledged ALB06-E04 (RWST Lo level), and was directed by the SRO to monitor Reactivity while the UO responded per the annunicator response procedure. (Note; that assigning the OATC to monitor reactivity while the remainder of the operating crew are distracted by other plant conditions is of the highest importance, this is not just an empty statement but is intended to establish responsibilities during crew responses). If it is expected by the NRC examiner that OATC is to be burdened with the additional responsibility of considering and recommending actions to the crew related to the problem or failure you would weaken this focus on core reactivity and thereby render this assigned task useless. In addition, in the past the station has been complemented by INPO and the NRC on this approach to transient response. The applicant to the extent possible did assist the UO and SRO by monitoring trends and updated the SRO on the status. Prior to the UO and SRO determining that the sludge mixing valves were open the applicant did ask if there were any manual valves that could be manipulated downstream if the air operated valves were isolated and leaking by. In addition, the examiner's written report states that the UO directed a communication to the applicant that the sludge mixing valves should have closed on low RWST level, this is in error and supported by the other candidates because this information was reported to the SRO, NOT the applicant (why would this communication be directed to the OATC, this is not logical).

The SRO and UO were aware that the sludge mixing valves did not isolate and that they were located on the QPCP. Other crews **where all the candidates passed** had issues with determining the location of the hand switches to close the valves, but this was not the case for our crew. The SRO and UO were looking for the correct procedure guidance to isolate the sludge mixing valves (activities performed directly by procedure guidance as opposed to knowledge based actions are always recommended and encouraged by the station, if this is not considered an appropriate approach to the safe operation of the station the NRC should maybe make some change recommendations). Isolating the sludge mixing valves per the SOP would protect plant equipment to ensure the pumps associated with the sludge mixing were properly stopped.

LACK OF ABILITY/KNOWLEDGE

The applicant could not recommend to the crew to isolate the sludge mixing valves because they were already aware. The applicant ensured that she notified the SRO on the status of the RWST so that the SRO could assess the level of urgency in finding the correct procedure. The grading criteria utilized, is not listed as an expected action or behavior on the Required Operator Actions on Form ES-D-2 (See supporting documents). In addition it is unrealistic to identify that the applicant made an error because she did not make a recommendation to the crew. If all crew members were heavily involved in diagnosing and response to the failure, no one would be adequately monitoring reactivity.

Supporting Documentation

Pg. 20 response:

When ALB06-E04 was received, Charlissa (RO) silenced and announced the alarm. I (SS) directed Charlissa to continue to monitor reactivity and directed [redacted] to pull the ARP for the alarm and investigate actions to be taken. [redacted] informed me, by name, not Charlissa of the automatic action that did not take place. There was never any confusion as to where the hand switches were located by either [redacted] or me. I made a conscious decision to isolate the sludge mixing system by use of the SOP 13105-1 Step 4.2.7.3. This decision was based on not isolating the system with the pump running. The delay of 19 minutes was incurred while reviewing the P&ID for the RWST and finding the correct procedure and step to isolate the sludge mixing system. My expectation for Charlissa was for her to monitor reactivity and critical parameters of the reactor. Charlissa getting involved with troubleshooting and diagnosis would have taken away from the duties I directed her to do.

[redacted]

Pg. 20 response:

[redacted] directed me to pull the ARP for ALB06-E04 while Charlissa (RO) was directed to monitor reactivity. After reviewing the ARP, I informed [redacted] that the automatic action of the valves going shut should have occurred. I waited on direction from [redacted] to shut the valves. There was no confusion on where the valves were located. [redacted] discussed with me procedural guidance for shutting the valves and directed me to find the SOP for removing the sludge mixing system from service. I agreed with this action so that challenging the automatic action of the pump tripping would not be challenged; not challenging automatic actions of systems is an expectation of both Operations and Operations Training being reinforced throughout license training.

[redacted]

Examiner's Comments

CROSS REFERENCE:

3.c: Control Board Operations – Manual Control

SCENARIO/EVENT:

Scenario 7, Event 3: Loss of Cooling to Letdown Heat Exchanger (TE-0130 Failed Low)

EXPECTED ACTION/RESPONSE:

The applicant, as Reactor Operator (RO), was expected to diagnose the failure of TE-0130, Letdown Heat Exchanger Outlet Temperature, and manually control TV-0130 using controller 1TIC-130, LETDOWN HX OUTLET TEMP.

APPLICANT ACTION/RESPONSE:

When TE-0130 failed low, the applicant acknowledged the associated alarms (ALB07-F04 & ALB07-B04), but did not take any actions to manually control letdown temperature, and also did not recommend to the Senior Reactor Operator (SRO) that she could manually control letdown temperature. Approximately seven minutes after the first alarm annunciated, the applicant made the statement, "The only thing we can do is call C&T [Clearance & Tagging] to get the TE fixed." Approximately one minute later, the SRO directed the applicant to take manual control of 1TIC-130 and monitor the VCT outlet temperature. When the applicant began manipulating 1TIC-130, she initially pressed the up arrow, and the SRO immediately informed her that the controller raises and lowers temperature and that the arrows are not indicative of opening and closing the valve. After the incorrect manipulation and specific direction from the SRO, the applicant gained control of letdown temperature. After the scenario, the applicant was asked to explain her response to the malfunction. She stated that she initially pressed the up pushbutton, and then corrected her actions and pushed the down pushbutton.

The applicant had seven minutes to understand that the automatic function of controlling letdown temperature could be accomplished manually. Instead of making this recommendation to the SRO, she stated that the only option was to call C&T to get the TE repaired. Furthermore, she demonstrated a weakness in taking manual control of an automatic function by her incorrect manipulation of 1TIC-130. The applicant was downgraded in this competency due to not demonstrating the ability to manually control an automatic function.

The applicant made one non-critical error in this rating factor; therefore, a score of "2" was assigned.

LACK OF ABILITY/KNOWLEDGE:

The applicant demonstrated a weakness in her ability to take manual control of an automatic function. Specifically, this was demonstrated by the applicant not taking manual control of letdown temperature or recommending manual control for approximately seven minutes before the SRO finally directed manual control. Furthermore, she demonstrated a weakness in ability to take manual control of an automatic function by incorrectly manipulating 1TIC-130 until being corrected by the SRO.

POTENTIAL CONSEQUENCES:

The potential consequences of not correctly controlling letdown temperature include a challenge to the interlock that protects the demineralizers from high temperatures as well as reactivity effects resulting from letdown temperature changes.

K/A (SRO IMPORTANCE RATING): 006K4.24 (3.0)

10CFR55.45(a)(3): Identify annunciators and condition-indicating signals and perform appropriate remedial actions where appropriate.

Applicant Response

In response to, 3c. Control Board Operation – Locate and Manipulate (comment on page 21)

APPLICANT ACTION/ RESPONSE

The examiner writes that when TE – 130 failed low, that the applicant acknowledged the associated alarms but did not take any actions to take manual control of letdown temperature and also did not recommend to the SRO that she could manually control letdown temperature The event description does not identify that the applicant acknowledged the alarms and was immediately told to go back to the C panel and monitor reactivity (Note; that in previous NRC administered exams circumstances are established to make the applicant respond to the condition if this is the intent (example, have the UO performing actions on the back panels), the NRC examiners could have easily controlled this situation by a simply direction of "WE WOULD LIKE FOR YOU TO RESPOND TO THIS FAILURE WHILE THE UO ASSUMES THE REACTIVITY RESPONSIBILITY", not giving this type of cue or direction could be interpreted by the candidate that the NRC desires that the UO is to perform this function as part of the simulator testing plan .

When the UO was directed to address the alarm and respond to the failure (with no disagreement from the NRC exam team) all the NRC grading and point reduction related to the OATC response would appear not to be appropriate. At that time the applicant was not assigned to diagnose or respond to the failure. The applicant assisted the crew and identified to the SRO that TIC-130 was closed. In determining that the Temperature Element had failed low, the applicants' statement was to notify the SRO that there was no associated AOP entry with the failure and that it could only be fixed by contacting C&T (implying that the actual repair of the component would require maintenance, note to contact C&T and request a work order, condition report, and notify operations management of the problem should have been consistently observed by the NRC testing team). The SRO directed the applicant to open the valve (TI-130) and the applicant did push the up arrow first. The error had no negative impact and was quickly corrected when the down arrow was pressed and the temperature was controlled and monitored for the duration of the scenario. Initial thought was to open the valve but the TIC-130, located in the Control Room is not a direct indication of valve position. It is representative of controlling the temperature by using the up arrow to raise temperature and the down arrow to lower temperature.

After the scenario the examiner did ask questions about the incorrect manipulation, and the applicant explained in detail how the valve works. Applicant identified that the controller is used to control temperature and that you must understand what direction the valve, TI-130, moves based on the how temperature is controlled. If the up arrow is pressed then you are trying to raise temperature, then the valve (TI-130) would close (TI-130 controls the amount of cooling water that goes through the letdown heat exchanger). Because the TE-130 failed the controller thought that temperature lowered and closed the valve to decrease the amount of cooling water that went through the heat exchanger to try to raise temperature. This was all explained to the examiner.

Initially the controller was operated in the wrong direction and there was no impact because the valve was already in the closed position. In addition I would like for the review team to evaluate the categorization of this comments. If the evaluator's main comments was that "the valve was initially operated in the wrong direction". Then would it be more appropriate that this be placed under "Locate and Manipulate" versus "Manual Control". This is a similar description to what was described in comment # 19 in which the PORV was operated in the wrong direction (see supporting documents for a copy of the comment). The applicant did manually control the parameter once the valve was open. The applicant trended the program and notified the SRO when the parameter was back in specification.

When reviewing consider the following:

1. The applicant was assigned to monitor Reactivity , UO was designated to diagnose the failure
2. The applicant is the crew member that identified the failure to the SRO
3. Once the valve was turned back over to the applicant, she controlled the parameter until back in spec.
4. Was this comment categorized correctly
5. The valve was already closed, so there were no consequences

Supporting Documentation

CROSS REFERENCE:

3.a: Control Board Operations – Locate & Manipulate

SCENARIO/EVENT:

Scenario 7, Event 5: Pressurizer (PRZR) Pressure Transmitter (PT-456) Failed High causing PORV to Open, PORV Block Valve Failed to Automatically Close

EXPECTED ACTION/RESPONSE:

The applicant, as Reactor Operator (RO), was expected to diagnose a failure of PT-456, and correctly perform the immediate operator actions of procedure 18001-C, "Systems Instrumentation Malfunction," Section C, which included:

- closing pressurizer spray valves
- closing the affected PORV, and
- operating heaters as necessary to restore pressure.

The applicant was expected to complete these Immediate Operator Actions without requiring assistance from other crew members.

APPLICANT ACTION/RESPONSE:

The applicant correctly diagnosed that PT-456 failed high and immediately closed the pressurizer spray valves. However, she did not immediately close the affected PORV, or its associated PORV Block Valve, and PRZR pressure continued to lower. Approximately 30 seconds after initiation of the failure, the Senior Reactor Operator loudly directed, "Shut that valve!" The applicant then closed the PORV to halt the pressure decrease. After the scenario, the applicant was asked to explain her response to the PT-456 failure. The applicant stated that she had initially manipulated the PORV switch in the wrong direction. The applicant was downgraded in this competency because she did not manipulate the PORV handswitch in an accurate manner.

The applicant made three non-critical errors in this rating factor; therefore, a score of "1" was assigned.

LACK OF ABILITY/KNOWLEDGE:

The applicant demonstrated a weakness in her ability to accurately operate the PORV handswitch.

POTENTIAL CONSEQUENCES:

The potential consequences of not closing either the PORV or its associated block valve include an unnecessary reactor trip due to the vapor space loss of coolant accident through the open PORV.

K/A (SRO IMPORTANCE RATING): 010A2.03 (4.2)

10CFR55.45(a)(3): Identify annunciators and condition-indicating signals and perform appropriate remedial actions where appropriate.

Pg. 21 response:

Charlissa (RO) was the first to recognize that TE-0130 was the failed component. I directed [redacted] to pull and investigate the appropriate ARPs. The statement Charlissa made about contacting C&T was to reinforce the fact that there was no AOP entry to be made (for loss of letdown). This statement was not stand-alone and was taken out of context for the situation. When operating TIC-130 there was no consequential action in pressing the up arrow and the crew immediately self corrected as is the expectation of Operations Training and Operations for the control room team.

[redacted]

Communication

CROSS REFERENCE:

4.a: Communications – Clarity

SCENARIO/EVENT:

Scenario 6, Event 4: Controlling Pressurizer Level Channel LT-459 Failed Low

EXPECTED ACTION/RESPONSE:

The applicant, as Senior Reactor Operator (SRO), was expected to accurately state the status of FIC-0121 during the crew brief that was performed following plant stabilization.

APPLICANT ACTION/RESPONSE:

In response to LT-459 failing low, the applicant directed the Reactor Operator (RO) to place FIC-0121 in manual to control pressurizer level. However, approximately one minute later, the applicant stated during a crew brief that FIC-0121 was in automatic. The RO quickly corrected the communication error. The applicant was downgraded due to not clearly and accurately communicating the status of FIC-0121 to the crew.

The applicant made three non-critical errors in this rating factor; therefore, a score of "1" was assigned.

LACK OF ABILITY/KNOWLEDGE:

The applicant demonstrated a weakness in her ability to correctly communicate the status of FIC-0121 to the crew during a brief.

POTENTIAL CONSEQUENCES:

The potential consequences of not correctly communicating component status to the crew include incorrect operator actions and confusion as to actions that may be required.

K/A (SRO IMPORTANCE RATING): G2.1.17 (4.0)

10CFR55.45(a)(13): Demonstrate the applicant's ability to function within the control room team as appropriate to the assigned position, in such a way that the facility licensee's procedures are adhered to and that the limitations in its license and amendments are not violated.

Response:

It was mention more than once that the controller was in manual during this briefing. In one sentence the word "automatic" was used. This was a **briefing** and nothing was directed to be performed during the briefing. This is the example of a comment that would not have any impact. The status of the controller was discussed in the briefing and the discussion centered around the crew taking the controller back to automatic once the briefing was over.

CROSS REFERENCE:

4.a: Communications – Clarity

SCENARIO/EVENT:

Scenario 6, Event 4: Controlling Pressurizer Level Channel LT-459 Failed Low

EXPECTED ACTION/RESPONSE:

The applicant, as Senior Reactor Operator (SRO), was expected to enter the correct procedure (18001-C) and begin performing the steps to address the failure of LT-459. The applicant was not expected to direct the Unit Operator (UO) to perform Immediate Operator Actions because there were no Immediate Operator Actions associated with this failure.

APPLICANT ACTION/RESPONSE:

The applicant, in response to LT-459 failing low, directed the UO to perform Immediate Operator Actions. The UO responded that no Immediate Operator Actions existed. The applicant then proceeded to enter the correct procedure and perform steps in the correct section of that procedure. After the scenario, the applicant was asked what Immediate Operator Actions she had intended the UO to perform after the associated alarms were received. The applicant stated that she had "misspoke" when providing that direction. The applicant was downgraded in this competency because she did not communicate in a clear, accurate, and easily understood manner when she provided direction to the UO to perform Immediate Operator Actions that did not exist for the failure of LT-459.

The applicant made three non-critical errors in this rating factor; therefore, a score of "1" was assigned.

LACK OF ABILITY/KNOWLEDGE:

The applicant demonstrated a weakness in her ability to communicate in a clear, accurate, and easily understood manner when she provided direction to the UO to perform Immediate Operator Actions that did not exist.

POTENTIAL CONSEQUENCES:

The potential consequences of incorrectly directing immediate operator actions include creating confusion surrounding the correct diagnosis of plant conditions.

K/A (SRO IMPORTANCE RATING): G2.1.17 (4.0)

10CFR55.45(a)(13): Demonstrate the applicant's ability to function within the control room team as appropriate to the assigned position, in such a way that the facility licensee's procedures are adhered to and that the limitations in its license and amendments are not violated.

Response:

Directing the operator to perform Immediate Operator Actions did not in any way hinder the performance of the Abnormal Operating Procedure entry. The applicant identified that she misspoke. At no time was there any confusion as to what was expected to occur. After the correction, the correct AOP was entered and the failure was addressed. No consequences could occur, nor did this have any effect on the diagnosis of the event.

CROSS REFERENCE:

4.a: Communications – Clarity

SCENARIO/EVENT:

Scenario 7, Event 7: MFRV #3 Failed Shut Requiring Reactor Trip, Three Stuck Rods

EXPECTED ACTION/RESPONSE:

The applicant, as Reactor Operator (RO), was expected to state that pressurizer pressure was not less than 1870 psig in accordance with procedure 19000-C, "E-0 Reactor Trip or Safety Injection," Step 4 RNO.

APPLICANT ACTION/RESPONSE:

When the Senior Reactor Operator (SRO) directed the applicant to "check if SI is required," the applicant initially checked steam generator pressures, and then incorrectly informed the SRO that pressurizer pressures were 1020 psig and stable. The SRO did not correct the communication, nor did the applicant correct the false information. The SRO did not direct any incorrect actions based on the communication error. The applicant was downgraded in this competency because she did not communicate in an accurate manner when a determination was being made on whether safety injection was required.

The applicant made three non-critical errors in this rating factor; therefore, a score of "1" was assigned.

LACK OF ABILITY/KNOWLEDGE:

The applicant demonstrated a weakness in her ability to correctly communicate information to the SRO when checking to see if a safety injection was required.

POTENTIAL CONSEQUENCES:

The potential consequences of providing an incorrect pressurizer pressure include making the wrong decision on whether safety injection is required.

K/A (SRO IMPORTANCE RATING): G2.1.17 (4.0)

10CFR55.45(a)(13): Demonstrate the applicant's ability to function within the control room team as appropriate to the assigned position, in such a way that the facility licensee's procedures are adhered to and that the limitations in its license and amendments are not violated.

CROSS REFERENCE:

4.b: Communications – Crew & Others Informed

SCENARIO/EVENT:

Scenario 3, Event 1: Steam Generator (SG) #4 NR LT-554 Failed High

EXPECTED ACTION/RESPONSE:

The applicant, as Senior Reactor Operator (SRO), was expected to request the Shift Manager's permission prior to placing 1-FIC-540 (SG #4 FRV) back to automatic after selecting the unaffected SG level control channel. Procedure NMP-OS-007-001, Version 9.0, "Conduct of Operations Standards and Expectations," Step 6.29.2.1, states, in part, "When a system or component has been placed in manual due to a transient caused by an automatic control malfunction, SM permission is required prior to returning the system or component to automatic control following stabilization from the transient and correction of the malfunction."

APPLICANT ACTION/RESPONSE:

The applicant incorrectly directed the Unit Operator (UO) to place 1-FIC-540 back to automatic without first getting permission from the Shift Manager. After the applicant gave the direction to the UO, the Reactor Operator (RO) whispered to the applicant that she needed to get the Shift Manager's permission prior to going to automatic. The applicant then instructed the UO to wait to place 1-FIC-540 back to automatic until the Shift Manager's permission was obtained. The applicant obtained the Shift Manager's permission, and then correctly directed the UO to place 1-FCI-540 back to automatic. The applicant was downgraded due to not keeping the Shift Manager informed as required by NMP-OS-007-001. It was only the correction by the RO that allowed the communication requirement to be met.

The applicant made two non-critical errors in this rating factor; therefore, a score of "1" was assigned.

LACK OF ABILITY/KNOWLEDGE:

The applicant demonstrated a weakness in her ability to keep other crew members informed by not getting permission from the Shift Manager prior to placing 1-FIC-540 back to automatic.

POTENTIAL CONSEQUENCES:

The potential consequences of not keeping all crew members informed in accordance with plant administrative procedures is that incorrect decisions could be made, or a delay in actions or response could be incurred while that information is conveyed at a later time.

K/A (SRO IMPORTANCE RATING): G2.1.17 (4.0)

10CFR55.45(a)(13): Demonstrate the applicant's ability to function within the control room team as appropriate to the assigned position, in such a way that the facility licensee's procedures are adhered to and that the limitations in its license and amendments are not violated.

CROSS REFERENCE:

4.b: Communications – Crew & Others Informed

SCENARIO/EVENT:

Scenario 3, Event 4: Controlling Pressurizer Pressure Channel PT-455 Failed High

EXPECTED ACTION/RESPONSE:

The applicant, as Senior Reactor Operator (SRO), was expected to request the Shift Manager's permission prior to placing the pressurizer master pressure controller back to automatic following the selection of an unaffected pressurizer channel. Procedure NMP-OS-007-001, Version 9.0, "Conduct of Operations Standards and Expectations," Step 6.29.2.1, states, in part, "When a system or component has been placed in manual due to a transient caused by an automatic control malfunction, SM permission is required prior to returning the system or component to automatic control following stabilization from the transient and correction of the malfunction."

APPLICANT ACTION/RESPONSE:

The applicant incorrectly directed the Unit Operator (UO) to place the pressurizer master pressure controller back to automatic without first getting permission from the Shift Manager. The applicant was downgraded due to not keeping the Shift Manager informed as required by NMP-OS-007-001.

The applicant made two non-critical errors in this rating factor; therefore, a score of "1" was assigned.

LACK OF ABILITY/KNOWLEDGE:

The applicant demonstrated a weakness in her ability to keep other crew members informed by not getting permission from the Shift Manager prior to placing the pressurizer master pressure controller back to automatic.

POTENTIAL CONSEQUENCES:

The potential consequences of not keeping all crew members informed in accordance with plant administrative procedures is that incorrect decisions could be made, or a delay in actions or response could be incurred while that information is conveyed at a later time.

K/A (SRO IMPORTANCE RATING): G2.1.17 (4.0)

10CFR55.45(a)(13): Demonstrate the applicant's ability to function within the control room team as appropriate to the assigned position, in such a way that the facility licensee's procedures are adhered to and that the limitations in its license and amendments are not violated.

Response:

This is new standard that was recently incorporated. Two comments were identified in this area and in each comment it states that the applicant **directed/instructed** the Operator to place a component back in automatic. Each time the crew corrected and ensured that the SM was notified (No actions were performed). The crew is expected to function as team. If the component were placed in automatic, there are no actions that would occur that would affect the outcome of the scenario or the event.

CROSS REFERENCE:

4.c: Communications – Receive Information

SCENARIO/EVENT:

Scenario 6, Event 1: ACCW Pump #1 Locked Rotor with Failure of the Standby ACCW Pump to Automatically Start

EXPECTED ACTION/RESPONSE:

The applicant, as Senior Reactor Operator (SRO), was expected to acknowledge communication of technical data in accordance with the three-way communication standards stated in procedure 00004-C, "Plant Communications," Revision 9.5. Specifically, during this event when the Unit Operator (UO) stated that alarms were consistent with the failure of the ACCW pump malfunctions, it was expected that the applicant repeat the information and the UO complete the communication by stating that the repeated information was correct.

APPLICANT ACTION/RESPONSE:

The UO clearly stated to the applicant that the alarms were consistent with the ACCW pump malfunctions, but the applicant did not repeat the information. Also, the UO did not ensure that the SRO correctly received the information.

The applicant made one non-critical error in this rating factor; therefore, a score of "2" was assigned.

LACK OF ABILITY/KNOWLEDGE:

The applicant demonstrated a weakness in her ability to correctly receive verbal technical information.

POTENTIAL CONSEQUENCES:

The potential consequences of not receiving information in accordance with plant administrative procedures is that incorrect decisions could be made, or a delay in actions or response could be incurred while that information is conveyed at a later time.

K/A (SRO IMPORTANCE RATING): G2.1.17 (4.0)

10CFR55.45(a)(13): Demonstrate the applicant's ability to function within the control room team as appropriate to the assigned position, in such a way that the facility licensee's procedures are adhered to and that the limitations in its license and amendments are not violated.

Response:

This comment is focusing on a portion of the communications that was repeated back - Evaluator identifies the applicant doesn't repeat back that the "alarms are consistent with the failure" although it has already been identified that the pump tripped.