Entergy

Entergy Operations, Inc.
17265 River Road
Killona, LA 70057-3093
Tel 504 739 6001
gpierce@entergy.com

Glenn M. Pierce
Manager, Training and Development
Waterford 3

10CFR 55

October 16, 2012

W3F1-2012-0089

Mr. Elmo E. Collins, Jr.
USNRC, Region IV,
1600 E. Lamar Blvd.,
Arlington, TX 76011-4511

Subject: Operator Initial License Examination Post Examination Materials
Waterford Steam Electric Station, Unit 3 (Waterford 3)
Docket No. 50-382
License No. NPF-38

Dear Mr. Collins:

In accordance with guidance provided in NUREG-1021, ES-501, "Initial Post-Examination Activities," Entergy hereby submits post examination materials from the NRC initial license examination administered at Waterford 3 on October 10, 2012. The enclosed materials include the following:

- Applicant examination coversheets and graded answer sheets.
- Clean copies of the applicants answer sheets.
- Written examination and key.
- Written examination seating chart.
- ES-403-1 written examination grading quality checklist.
- Written examination performance analysis.
- Original Form(s) ES-201-3, "Examination Security Agreement," with a pre- and post-examination signature by every individual who had detailed knowledge of any part of the examination before it was administered.

There were no substantive questions asked by the applicants during conduct of the exam. There were post exam comments made by the applicants on 2 questions. Recommended changes for the grading of 2 questions are included with this submittal.

There are no new commitments contained in this submittal.

Please withhold the examination from public disclosure for 24 months in order to allow its utilization for subsequent operator licensing program audit examinations.

If you have any questions pertaining to the contents of the enclosure, please contact Mr. John Signorelli, Simulator and Support Training Superintendent, at (504) 739-6032. For any questions or concerns pertaining to regulatory compliance, please contact Michael E. Mason, acting Licensing Manager, at (504) 739-6673.

Sincerely,

John Signorelli

John Signorelli, Acting Training Manager

Manager, Training & Development

GMP/JVS/JDW

Enclosure: Operator Initial License Examination Post Examination Materials

(w/o Enclosure)

cc: NRC Region IV Operator Licensing Assistant
Laura.Hurley@nrc.gov

Chief Examiner, NRC Region IV Operator Licensing
Brian.Larson@nrc.gov

NRC Senior Resident Inspector
Waterford Steam Electric Station Unit 3
Marlone.Davis@nrc.gov

NRC/NRR Project Manager for Waterford 3
Kaly.Kalyanam@nrc.gov

Enclosure

W3F1-2012-0089

Operator Initial License Examination Post Examination Materials

ATTACHMENT 9.5 CERTIFICATION REFERENCE FORM

Sheet 1 of 1

{Typical}

Letter Number: **WF3F1-2012-0089**

Subject: **Operator Initial License Examination Post Examination Materials**

Certifiable Statement(s): Use one of the following methods to identify certifiable statements in the table below:

1 Identify location in submittal (e.g., page3, para 2, sentence 1) OR,
2 Paste in the exact words of the statement(s) OR,
3 State "see attachment" and attach a copy of the correspondence with the certifiable statements indicated (e.g., by redlining, highlighting, or underlining, etc.).

Each statement or section of information being certified should be uniquely numbered to correspond with the supporting documentation listed below.

Objective Evidence or Basis of Peer Review: List the supporting documents in the table below and attach a copy of the documents OR give basis of peer review. Large documents need not be attached. Peer review is used when objective evidence is not available or the objective evidence does not clearly substantiate the statements

Certifiable Statement(s)	Objective Evidence or Basis of Peer Review
1 All statements on page 1 of cover-letter identifying the compliance with NUREG-1021, ES-501 and accurate description of contents in the enclosure.	1 Using NUREG-1021, ES-501, C.1.a instruction to identify and verify inclusion of appropriate exam related contents, and excluding those not appropriate. Also, EN-TQ-105 guidance in 5.13 and Att. 9.11 is followed to ensure compliance NUREG-1021.
2	2

Individual certifying the statement(s): (Certification may be documented using electronic mail (e-mail), telecom, "sign off" sheet, or inter-office memorandum. The form of documentation should specifically identify the information being certified.)

	Training	10/16/12
Name	Department	Date

Peer Review: (Indicate "N/A" if not used.)

N/A	N/A	
Name	Department	Date

ATTACHMENT 9.4 NRC SUBMITTAL REVIEW

Sheet 1 of 2 *{Typical}*

Letter #: W3F1-2012-0089 **Response Due:** 10/16/2012

Subject: Operator Initial License Examination Post Examination Materials **Date Issued for Review:** 10/15/2012

Correspondence Preparer / Phone #: Joe Williams / (504) 739-6693

Section I **Letter Concurrence and Agreement to Perform Actions**

POSITION / NAME	Action (concurrence, certification, etc.)	Signature (sign, interoffice memo, e-mail, or telecom)
Training Supt. / J. Signorelli	Certification documentation complete	
COMMENTS		
None		

Section II **Correspondence Screening**

Does this letter contain commitments? **If "yes," identify the commitments with due dates in the submittal and in Section III. When fleet letters contain commitments, a PCRS LO (e.g., LO-LAR, LO-WT) should be initiated with a CA assigned to each applicable site to enter the commitments into the site's commitment management system.**	Yes No	☐ ☒
Does this letter contain any information or analyses of new safety issues performed at NRC request or to satisfy a regulatory requirement? **If "yes," reflect requirement to update the UFSAR in Section III.**	Yes No	☐ ☒
Does this letter require any document changes (e.g., procedures, DBDs, FSAR, TS Bases, etc.), if approved? **If "yes," indicate in Section III an action for the responsible department to determine the affected documents. (The Correspondence Preparer may indicate the specific documents requiring revision, if known or may initiate an action for review.)**	Yes No	☐ ☒
Does this letter contain information certified accurate? **If "yes," identify the information and document certification in an attachment. (Attachment 9.5 must be used.)**	Yes No	☒ ☐

Section III **Actions and Commitments**

Required Actions *Note: Actions needed upon approval should be captured in the appropriate action tracking system*	**Due Date**	**Responsible Dept.**
none	n/a	n/a
Commitments	**Due Date**	**Responsible Dept.**
none	n/a	n/a

ATTACHMENT 9.4 NRC SUBMITTAL REVIEW

Sheet 2 of 2 *{Typical}*

Section IV Final Document Signoff for Submittal

Correspondence Preparer	Joe Williams (via email)	Date: 10/15/2012
Reviewer	J. Signorelli	Date:
Training & Development Mgr	(see coverletter)	Date: n/a

2012 NRC Written Exam Item Analysis

The following questions were missed by ≥ 50% of the applicants:

RO Question 9 - 8/13 = 61.5%

Six of eight applicants missing this question selected B. .Selection B has been determined to also be correct. This reduces the number of incorrect responses to 2/13 or 15.4%. See Justification for Exam Changes for additional information.

Two of eight applicants selected A. The CEDM MG Set Supply breakers would remain closed. These breakers will trip on overcurrent or on undervoltage on the respective 32 bus. This would only occur if the DRT pushbuttons were not successful. In that case the operator would open the 32 bus feeder breakers to create an undervoltage situation which would trip the CEDM MG Set Supply breaker. The 32 Bus breakers would then be re-closed 5 seconds later to allow restoration of pressurizer heaters post trip. Since the stem stated that DRT was successful, this action would not be taken. Therefore, selection A is incorrect.

RO Question 27 - 8/13 = 61.5%

Eight of eight applicants missing this question selected C. The question asked if the minimum criteria for natural circulation were met. In accordance with OP-902-003, Loss of Offsite Power/Loss of Forced Flow Recovery, at least one Steam generator must meet the criteria. Steam Generator 1 parameters given in the stem met natural circulation criteria, Steam Generator 2 did not. Since one SG met the criteria, minimum criteria are met. Therefore, C is an incorrect selection. The question is correct as written.

RO Question 54 - 7/13 = 53.8%

Seven out of seven applicants missing this question selected B. IA-123 automatically opens to bypass a malfunctioning air dryer (plugged desiccant, valve lineup problem, etc.) if Instrument Air receiver pressure drops below setpoint. After pressure recovers IA-123 does not automatically re-close to place a faulty air dryer back in service. Operator action is required at the local panel to place an air dryer back in service. Therefore, selection B is incorrect. The question is correct as written.

RO Question 55 - 9/13 = 69.2%

Nine out of nine applicants missing this question selected A. In accordance with SD-CB, Containment Building, CVR-101 and 201 automatically open but require operator action to close the valves from CP-18 in the Control Room. Therefore part 2 of selection A is incorrect. The question is correct as written.

2012 NRC Written Exam Item Analysis

RO Question 64 - 11/13 = 84.6%

Eleven of eleven applicants missing this question selected B. In accordance with OP-903-007, Turbine Inlet Valve Cycling Test, Steam Bypass Control is controlled in manual during the setup for testing. Therefore, selection B is incorrect. The question is correct as written.

RO Question 74 - 8/13 = 61.5%

Three of eight applicants missing this question selected B. The EOPs are not exited until such time as exit conditions have been met and an another approved procedure such as OP-010-005, Plant Shutdown is implemented. Therefore, selection B is incorrect.

Five of eight applicants missing this question selected C. The Control Room crew does not implement the SAMGs. This is part of the TSC function. The Control Room supports the TSC by implementing specific EOP steps in support of the SAMGs. Therefore, selection C is incorrect.

This question is correct as written.

SRO Question 12 - 5/8 = 62.5%

Four of five applicants missing this question selected C and one applicant selected A. TS 2.2.1 and 3.3.1 do not need to be entered because the reactor trip function for Steam Generator Lo Level is only applicable in MODES 1 and 2. the initial conditions in the stem stated that the plant was in MODE 3. Additionally for selection A only the affected Steam Generator DP needs to be placed in bypass, in accordance with TS 3.3.2. Therefore, selections A and C are incorrect. This question is incorrect as written.

SRO Question 17 - 4/8 = 50%

Four of 4 applicants missing this question selected D. D has been determined to also be correct. This changes the number of incorrect responses to 0/8 or 0%. See Justification for Exam Changes for additional information.

2012 Waterford RO SPO Written Exam Analysis

RO Q#														Percent Missed
1														0.0%
2	1													7.7%
3		1				1								15.4%
4										1	1			15.4%
5														0.0%
6			1				1	1			1			30.8%
7														0.0%
8		1	1									1		23.1%
9	1	1	1	1					1	1		1	1	61.5%
10														0.0%
11														0.0%
12														0.0%
13														0.0%
14		1												7.7%
15														0.0%
16														0.0%
17														0.0%
18						1								7.7%
19														0.0%
20														0.0%
21	1											1		15.4%
22														0.0%
23					1									7.7%
24			1		1									15.4%
25		1	1											15.4%
26	1				1		1			1				30.8%
27			1	1	1	1	1		1	1			1	61.5%
28	1		1							1		1		30.8%
29														0.0%
30														0.0%
31											1			7.7%
32		1		1	1			1		1				38.5%
33							1				1			15.4%
34										1				7.7%
35		1								1	1	1		30.8%
36														0.0%
37														0.0%
38				1	1									15.4%
39						1								7.7%

2012 Waterford RO SRO Written Exam Analysis

RO Q#	1	2	3	4	5	6	7	8	9	10	11	12	13	Percent Missed
40														0.0%
41														0.0%
42	1	1		1			1		1					38.5%
43	1													7.7%
44												1		7.7%
45														0.0%
46														0.0%
47						1		1	1			1		30.8%
48					1									7.7%
49							1	1		1		1		30.8%
50	1		1	1							1	1		38.5%
51							1							7.7%
52							1							7.7%
53							1		1	1		1		30.8%
54						1	1		1	1	1	1	1	53.8%
55	1	1	1	1	1		1			1	1	1		69.2%
56														0.0%
57						1								7.7%
58														0.0%
59											1			7.7%
60			1											7.7%
61		1								1		1		23.1%
62				1										7.7%
63														0.0%
64	1		1	1	1	1	1	1	1		1	1	1	84.6%
65														0.0%
66														0.0%
67								1					1	15.4%
68	1		1								1	1		30.8%
69	1	1		1			1			1			1	46.2%
70														0.0%
71		1								1				15.4%
72														0.0%
73														0.0%
74	1	1	1		1	1	1			1	1			61.5%
75														0.0%
RO Score	82.67	82.67	82.67	86.67	86.67	88.00	81.33	92.00	90.67	78.67	84.00	80.00	92.00	

2012 Waterford RO SRO Written Exam Analysis

RO Q#													Percent Missed
SRO Q#													
1													0.0%
2							1				1		25.0%
3					1								12.5%
4							1						12.5%
5								1	1				25.0%
6							1					1	25.0%
7													0.0%
8					1				1		1		37.5%
9								1	1			1	37.5%
10													0.0%
11													0.0%
12					1		1		1		1	1	62.5%
13													0.0%
14													0.0%
15							1						12.5%
16													0.0%
17							1		1		1	1	50.0%
18													0.0%
19													0.0%
20								1			1	1	37.5%
21													0.0%
22													0.0%
23													0.0%
24									1				12.5%
25													0.0%
SRO Score					88.00		76.00	96.00	92.00	76.00	100.00	80.00	80.00
Overall Score					88.00		80.00	93.00	91.00	78.00	88.00	80.00	89.00

RO Question 9

RO question 9 was written for Generic Emergency Plant Evolution 029, Anticipated Transient Without Scram. The write up that follows is to request a change to the answer key to allow both selections B and D to be correct. The basis for this request is that the question stem did not provide all the necessary information, allowing 2 choices to be technically correct.

The question provided than an event occurs and the automatic reactor trip fails. No data is given related to the cause of the trip. The question also provides that the manual reactor trip at CP-2 fails and that a manual Diverse Reactor Trip is successful. The question then asks for the positions of 2 sets of breakers.

The CEDM MG Set Supply Breakers remain closed in this event. The Diverse Reactor Trip system functions to open the CEDM MG Set load contactors. The CEDM MG Set supply breakers do not receive a trip signal.

The other set of breakers in the question were the Reactor Trip breakers. In the answer key, the correct answer was for the Reactor Trip breakers to remain closed. This was based on a failure of the pushbutton on CP-2 and a failure of the automatic trip. For the pushbutton on CP-2, those buttons are assumed to fail on the panel and they will not operate any breakers. No further discussion on these buttons is warranted. For the automatic trip failure, the question stem did not give any specifics on the nature of the failure. The Waterford Plant Protection system (PPS) consists of an initiation logic and an actuation logic. Both are independent of each other and both are required to accomplish an automatic Reactor trip.

If the assumption is made that the PPS system generated and transmitted an initiation and actuation signal, and the reactor did not trip, then the Reactor Trip breakers would remain closed as the answer key suggests. If the PPS initiation logic functioned but the actuation logic failed, then the Reactor Trip breakers would remain closed. If, however, the PPS initiation logic was the source of the failure, then the Reactor Trip breakers could open in this event.

A low steam generator level will be used to illustrate this example. If steam generator level lowers to below the trip setpoint but the PPS initiation components for the low steam generator level did not change state, the matrix relays would not change state. The system description for PPS, Figure 4 has a dashed line depicting the portion of the circuit that functions as initiation and the portion that functions as actuation. In this example, there would be no PPS actuation and the Reactor Trip breakers would stay closed.

Continuing with this example, subsequent to the actuation of Diverse Reactor Trip, all CEAs would drop into the core. This is sensed by the Core Protection Calculators as a CEA out of sequence condition, and a DNBR trip signal would be transmitted from the CPCs to PPS. If the initiation failure mentioned above was specific to the low steam generator water level and the low DNBR initiation components functioned as designed, then the Matrix Trip Relays would deenergize and an actuation signal would be generated and the Reactor Trip breakers would open.

As shown on system description figure 8, the Trip Matrix ladder would deenergize if any one bistable contact opened. If the K101 contact for low steam generator level failed to change state (or any other card or relay in the generation of the low steam generator level signal), there would be no actuation in PPS. If the low DNBR K101 contact subsequently changed state, an actuation signal would be generated.

Control wiring diagram 5 shows the Reactor Trip breaker wiring. The push buttons on CP-2 are displayed in the top center of the diagram. The K1 relay contacts in the bottom center portion, located in CP-10, are the contacts operated by the PPS actuation relays shown at the bottom of figure 4.

Comments were raised by the applicants during and after the exam related to this concept. The applicants also reported that they were exposed to this condition in ATWS scenarios in the simulator during their training. The Waterford simulator is capable of modeling an ATWS where the trip breakers fail closed and remain closed and it is also capable of failing PPS such that the Reactor Trip breakers would trip after the CEAs drop into the core.

Performance on this question was that of the 13 applicants that took the RO exam, 5 got the question correct (38%). Of the 8 applicants that got the question wrong, 6 picked the distractor with the Reactor Trip breakers opening and the CEDM MG Set Supply breakers remaining closed.

For the reasons cited above, we request a change to the answer key to allow both selections B and D to be correct. The basis for this request is that the question stem did not provide all the necessary information, allowing 2 choices to be technically correct.

RO Question 9

FIG. 04 RPS SIMPLIFIED DIAGRAM

REF. TM 45700086

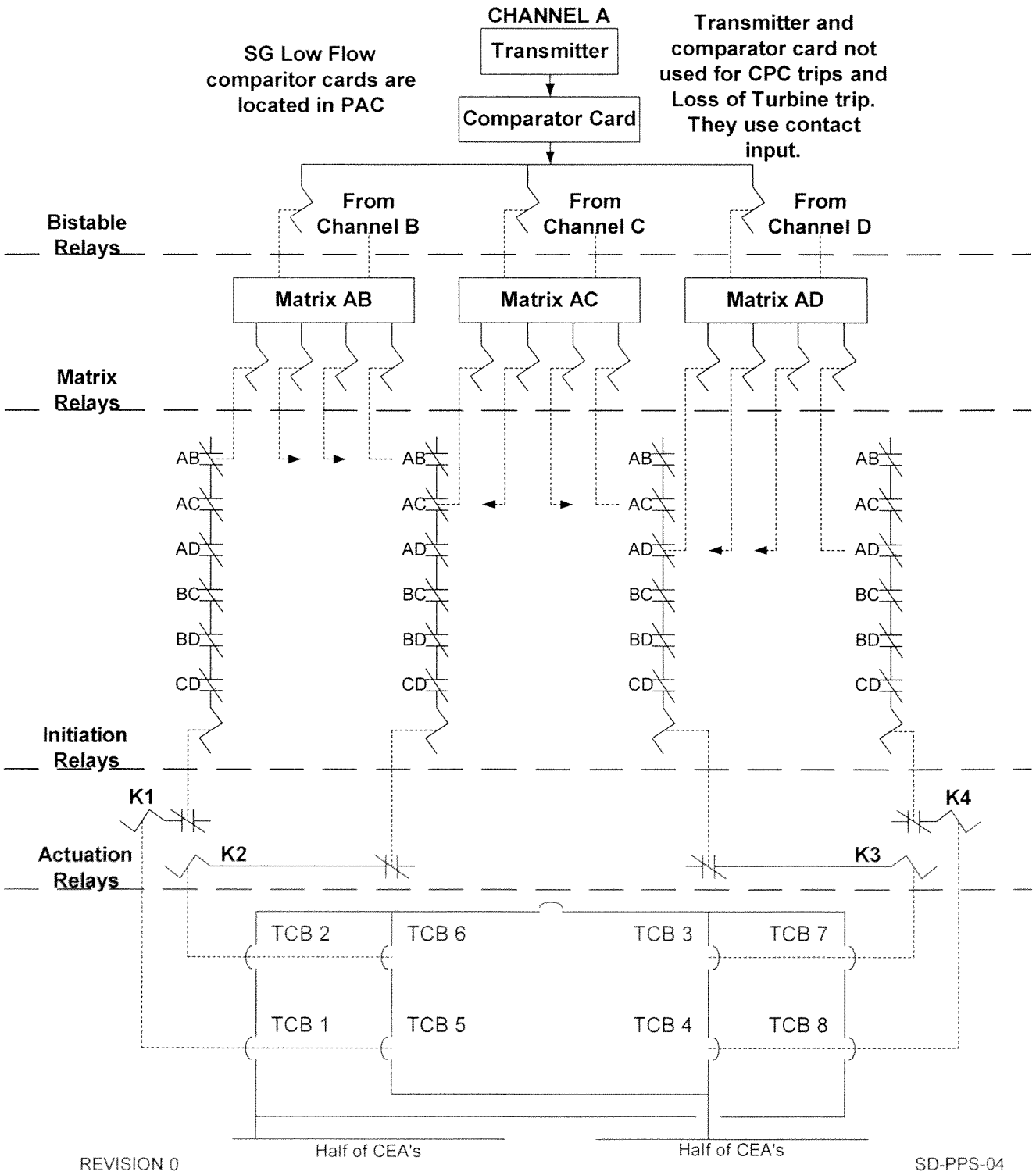

RO Question 9

FIG. 08 RPS TRIP MATRICES

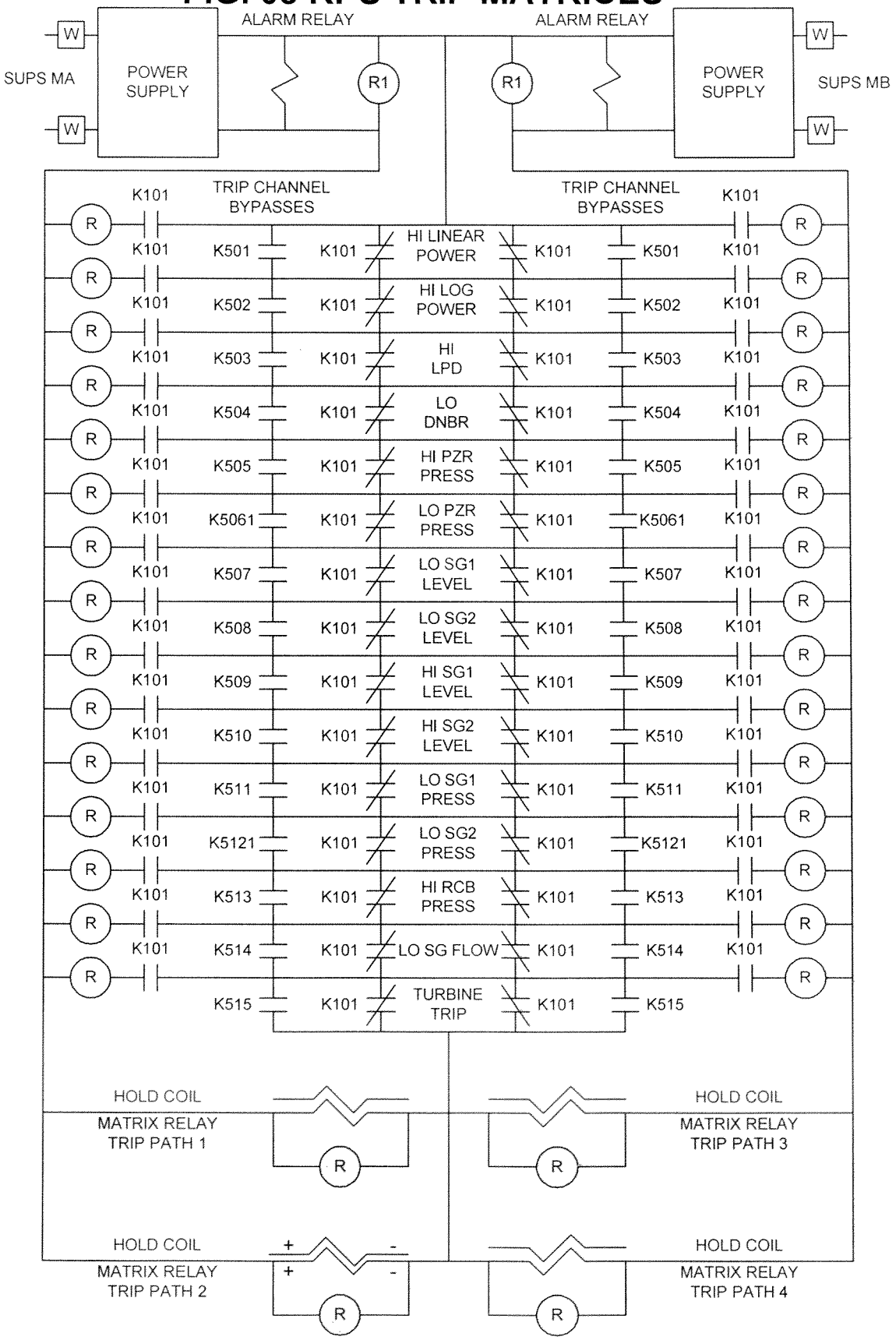

CIRCUIT SHOWN IN NORMAL, NOT TRIPPED CONDITION.

PPS Interconnections

Figure 2 shows the interconnections with the Plant Protection system and other plant control systems. RPS and ESFAS share some input signals and for some of the input signals they share bistable comparator cards. Table 10 lists the inputs, outputs, and functions of the PPS signals, and indicates which inputs are common or share comparators.

RPS System Description

The RPS functions are (1) to initiate automatic protective action to assure that acceptable Reactor Coolant System (RCS) and fuel design limits are not exceeded during AOOs and (2) to initiate automatic protective action during accident conditions to aid the ESFAS in limiting the consequences of accidents. The trip setpoints of the RPS are selected to ensure that AOOs do not violate the LHR and DNBR SAFDLs. Reactor trip also assists ESFAS in mitigating the consequences of DBAs, which are expected to occur once during the life of several plants and which include arbitrary combinations of unplanned events and degraded systems that are never expected to occur.

The LHR and DNBR SAFDLs are intended to meet the principal thermal hydraulic design basis of avoiding thermally induced fuel damage during steady state and transient operations. The thermal hydraulic design limits are a minimum DNBR of 1.26 and a PEAK FUEL CENTERLINE TEMPERATURE of 5080°F (decreasing by 58°F per 10,000 MWD/MTU). The LHR SAFDL of 21 KW/ft (steady state operation) is specifically intended to prevent fuel centerline melting.

RPS Subsystem Overview

Refer to Figure 4. The RPS uses transmitters for various key plant parameters. Each transmitter monitors a selected plant parameter and sends the status of that parameter to the RPS. This information is compared to a setpoint in a bistable comparator card. There are four separate transmitters for each parameter. These transmitters are identified as channels A, B, C, and D respectively. Channel A is represented in Figure 4. The CPC and Loss of Turbine trips use contact inputs instead of transmitters.

When a transmitter signal exceeds a trip setpoint, the bistable comparator card will de-energize its associated bistable relays. Each bistable comparator card drives several bistable relays. Three of the bistable relays are shown on Figure 4 for a typical bistable comparator card. Bistable relays are normally energized and will de-energize to trip the reactor. The bistable relays open contacts in their associated matrix circuit whenever they are de-energized.

There are six matrices AB, AC, AD, BC, BD, and CD respectively. Only matrices AB, AC, and AD are shown in Figure 4. Matrix AB receives inputs from RPS channels A and B. Matrix AB will keep its matrix relays energized as long as either A or B bistable relays are energized. Matrix relays are normally energized and will de-energize to trip the reactor. Whenever the A and B bistable relays are de-energized at the same time, the AB matrix relays will drop out. De-energizing any single matrix will lead to a reactor trip. It can be seen that de-energizing any two of the four bistable channels (A and B in this example) will de-energize a matrix and cause a reactor trip. Each matrix contains four matrix relays. These matrix relays operate contacts in the initiation circuit.

There are four separate initiation paths. Each path consists of several initiation relays. For simplicity, only one initiation relay is shown for each path in Figure 4. These initiation relays are maintained energized by six contacts, one for each matrix circuit. When any matrix circuit is de-energized, the associated matrix relays will open contacts in each of the initiation paths. All initiation relays will be de-energized when one or more matrices are de-energized. De-energizing all four paths of initiation relays will lead to a reactor trip. Initiation relays are used to operate actuation relays.

There are four separate actuation paths. Each path consists of several actuation relays. For simplicity, only the actuation relays that operate reactor trip breakers are shown in Figure 4. The actuation relays in the RPS are typically referred to as K relays. These actuation relays are maintained energized by initiation relay contacts. When an initiation path is de-energized, the initiation relays will open contacts in the associated actuation path. Each actuation relay operates two reactor trip breakers. De-energizing actuation relays in any of the following combinations will open the respective reactor trip breakers and lead to a reactor trip:

- K1 and K3
- K1 and K4
- K2 and K3
- K2 and K4

Figures 5 and 6 show the RPS mimics on CP-7 and CP-10 respectively. The layout of trip path 3 on Figure 6 has been modified from the mimic to show the actual circuit configuration. Solid state relays SSR1, SSR3, and SSR4 are the initiation relays. The red actuation lights shown in trip path 3 are located on the associated channel of CP-10 (see Figure 10 upper right corner). Normally energized, the lights will become dim when the initiation relays used to operate the K relays are de-energized. Observing that both actuation lights go dim will verify that both initiation relays, SSR3 and SSR4 operated properly. This observation is made during performance of OP-903-107, PPS functional test.

<u>Reactor Trip Breaker Operation</u>

The RPS trip actuation devices are the Reactor Trip Switchgear circuit breakers. Figure 6 includes a one-line diagram of the reactor trip switchgear (RTSG). The RTSG and CEDM MG sets are located in the RAB (+21). These non-class-1E CEDM MGs have a flywheel between the motor and generator to maintain a sufficient MG speed to keep the CEA's energized during a one-second interruption in power to the MG set motors.

The MG set outputs are connected to two buses through the reactor trip breakers. Each bus supplies half of the CEA's. CEA subgroups 1-12 receive power via reactor trip breakers 1, 2, 7, and 8, while subgroups 13-23 and CEA No. 1 are supplied through reactor trip breakers 3, 4, 5, and 6. Bus tiebreaker, TCB9, is normally closed. Should TCB9 be opened with a set of the reactor trip breakers having been opened by one of the K relays, the generators would no longer be in parallel. The reactor trip breakers should not be reclosed since there are no provisions for paralleling across the MGs. Paralleling the MGs can only be safely accomplished with the MG set output breakers.

With this arrangement, it is physically possible to have a half trip where only half the CEA's are de-energized and fall into the core. For example, opening reactor trip breakers 1 and 7 would de-energize subgroups 1 through 12 only. However, because the breakers are operated in pairs by the trip path K relays and manual trip pushbuttons, it is extremely unlikely that a half trip would occur. In either case, the CPC's would trip on DNBR due to radial peaking factor penalties added due to CEA out-of-sequence and CEA deviation conditions.

Control Room indication of RTSG status is provided on the CP-10 Reactor Trip Status Panel and on the CP-7 Reactor Trip Status Panel. All reactor trip breakers open on a reactor trip, except bus tie TCB 9. On both status panels, the red TCB breaker CLOSED lamps go off and the green OPEN lamps come on. All the white phase current indicating lamps go off along with the four CEDM undervoltage indicators. The REACTOR TRIP SWITCHGEAR BREAKER OPEN annunciator is also actuated.

In addition, to the reactor trip breakers, the RTSG cabinet also contains current monitoring devices for testing purposes. Four breaker trip pushbuttons at the upper front of the RTSG can be used for a local manual reactor trip in the event the plant must be shutdown from outside the Control Room. Each pushbutton energizes the shunt trip coils and trips the two reactor trip breakers in line with it vertically in a fashion similar to the CP-2 and CP-8 reactor trip pushbuttons. Refer to SD-EPC, Electrical Plant Components System Description, for more details on the reactor trip switchgear.

- Radial Power Shape

DNBR is the ratio of Critical Heat Flux to Actual Heat Flux. Critical heat flux (CHF) is that value of heat flux at which Departure From Nucleate Boiling (DNB) occurs. It is assumed that when DNB occurs the cladding fails, since the DT across the film layer adjacent to the cladding becomes very large.

If the correlation was completely accurate then a DNBR of 1.0 would imply CHF, or a 50/50 probability that the fuel rod is in DNB. However, because of the statistical nature of the correlation a given fuel rod could have a predicted DNBR less than 1.0 and still not experience DNB. DNBR is therefore a measure of the probability that DNB is occurring.

The NRC requires that for normal operation and anticipated operational occurrences the minimum DNBR shall provide a 95% probability with a 95% confidence that DNB does not occur. A DNBR of 1.24 using the CE1 correlation will provide this probability and confidence.

Anticipated Operational Occurrences

Anticipated Operational Occurrences (AOOs) are defined as those conditions of normal operation which are expected to occur one or more times during the life of the nuclear power unit.

This implies that there is better than a 50-50 probability in 40 years. In particular, the occurrences considered include single component or control system failure resulting in transients that would lead to a violation of acceptable plant and fuel design limits if protective action were not initiated.

Major AOOs that were used to determine the design requirement for the DNBR and LPD trip functions are as follows:

- Uncontrolled divergent Axial Xenon Oscillations
- CEA Related Events
  - Insertion or withdrawal of CEA groups including:
    - Uncontrolled sequential withdrawal of CEA groups from critical conditions
    - Out-of-sequence insertion or withdrawal of a single CEA group from critical conditions
    - Excessive insertion of CEA groups

- Insertion or withdrawal of CEA subgroups including:
  - Uncontrolled insertion or withdrawal of a single CEA subgroup from critical conditions
  - Dropping of a single CEA subgroup
  - Static misalignment of CEA subgroups comprising a designated CEA group
- Insertion or withdrawal of a single CEA including:
  - Uncontrolled insertion or withdrawal of a single CEA from critical condition
  - A single dropped CEA
  - A single CEA sticking, with the remainder of the CEAs in that group moving
  - A statically misaligned CEA
- Excess Load (excess heat removal due to secondary plant malfunctions) including:
  - Excess feedwater flow
  - Excess steam flow caused by inadvertent opening of steam bypass valves.
  - Excess steam flow due to inadvertent opening of turbine control valves.
  - Decrease in feedwater enthalpy
- Loss of Load (decrease in heat transfer capability between the secondary and reactor coolant systems) including:
  - Complete loss of main feedwater
  - Loss of external electrical load
- Loss of Forced Reactor Coolant Flow including:
  - Simultaneous loss of electrical power to all reactor coolant pumps at 100% power.
  - Stalling of Reactor Coolant Pump (RCP) motor (does not include sheared or seized shaft).
- Inadvertent Depressurization of the Reactor Coolant System
- Uncontrollable Boron Dilution
- Complete Loss of Offsite AC Power
- Asymmetric Steam Generator Transient Due to an instantaneous closure of an MSIV
- Steam Generator Tube Rupture

CPC channels will monitor one CEA from each subgroup and provide additional protection logic should there be deviations between the subgroups. Figure 4 shows CEA group, subgroup and CEDM assignments. Note that the CEA groups comprise subgroups having 4 CEAs each. Also note that each subgroup has one CEA in each quadrant: that is, one rod from each subgroup is "targeted" to each CPC. CEAs No. 1, 2, and 3 positions are not selected to any CPC; therefore their position cannot be displayed on the CPC channels.

Therefore, if one assumes for the moment that it is impossible for rods in a subgroup to deviate, then the CPCs can "see", in essence, the entire core. Although each CPC sees 1/4 of the core, that quarter of the core encompasses one rod in each subgroup. The rod in the subgroup is typical of the position of the other three rods in the subgroup (based on our assumption that subgroup CEAs are properly aligned) then each CPC "knows" the position of all CEAs in the core. Of course, the assumption that individual rods cannot deviate is invalid, but that shall be addressed shortly.

If our assumption is valid, then exactly what sort of information can be derived from the "Target CEA" scheme employed by the CPCs?

First, and most important, the CPCs use CEA position to derive radial peaking factors (RPFs). RPFs are defined as the ratio of the power in the hottest fuel rod to the average fuel rod in the core. A sharply peaked radial power profile implies that a fuel rod at the top of the peak may be producing a very large amount of power, even though the core average power may be low. Since both DNBR and LPD protection assure that no fuel rod in the core will approach a Specified Acceptable Fuel Design Limit (SAFDL), then a sharply peaked radial power distribution (RPD) could cause a reactor trip, if a SAFDL is in danger of violation. The RPF is derived using a look-up table. That is, the calculation of radial peaking factors (RPFs) is sufficiently time consuming that the CPCs do not have the time to perform a calculation for each rod configuration. These calculations are performed off-line, and previously derived Radial Peaking Factors are stored in a "table". They are purely a function of which CEA groups are inserted in the core. The CPCs assume proper CEA alignment, subgroup alignment (within a group) and group sequencing (per Technical Specifications) in deriving radial peaking factors. If any of these assumptions are invalid, then multiplicative "penalty factors" must be applied to the RPFs to increase their value commensurate with the amount of deviation.

It must be remembered that the CPCs assume proper CEA sequencing and alignment in the RPF lookup table. To assign a radial peaking factor, the CPCs simply check which CEA groups are in each node (or horizontal slice). Each slice uses the same RPF Table, but will get a different multiplier depending on how many groups are inserted in that individual slice. CPCs will calculate a total of 20 RPFs (PID 276 - 295).

A typical RPF lookup Table contains the following information:

CEA Configuration (TARGET CEA's)	Insertion of Regulating Group Only	With Shutdown Group Inserted
ARO	1.55	8.0
GP 6 inserted	1.65	8.0
GP 6 + 5 inserted	2.20	8.0
GP 6 + 5 + 4 inserted	2.55	8.0
GP 6 + 5 + 4 + 3 inserted	3.0	8.0
GP 6 + 5 + 4 + 3 + 2 inserted	3.0	8.0
GP 6 + 5 + 4 + 3 + 2 + 1 inserted	8.0	8.0

For each combination of groups inserted, a different Planar Radial Peaking Factor multiplier is assigned. The value of RPF is always greater than 1.0, as shown, due to the calculation using this as a multiplier.

If Regulating Groups 1 through 6 are withdrawn or inserted out of sequence, or if subgroups are misaligned within a group, then the CPCs (all four) will see these deviations and apply multiplicative penalty factors on the RPFs from the lookup table.

CPC/Control Element Assembly Calculator (CEAC) Interrelationship

The purpose of the Control Element Assembly Calculators (CEACS) is to provide the CPCs with information about individual CEA deviations. That is, the CEACs will look at the four CEAs in a subgroup, and send penalty factors to the CPCs if rods in a subgroup deviate from each other by more than a value of 9.9 inches in the outward direction between the deadband range. This means that CEACs will not generate a penalty factor on a dropped CEA. They will, however, generate a CWP. Figure 5 shows the CPC/CEAC relationship.

There are two CEACs, one per reed switch stack, physically located in Auxiliary Protective Cabinets B and C (CP-22), alongside the CPCs. CEAC #1, in Channel B, receives its input from Reed Switch Position Transmitter (RSPT) #l on all 87 CEAs, and CEAC #2, in Channel C, receives its input from all 87 CEAs via RSPT #2.

Each CEAC looks at all 87 CEAs to determine individual rod related deviations within a subgroup. Only "outward" deviations, or deviations where the individual CEA is <u>higher than its subgroup</u>, are penalized. "Inward" deviations where the individual CEA is

RO Question 9

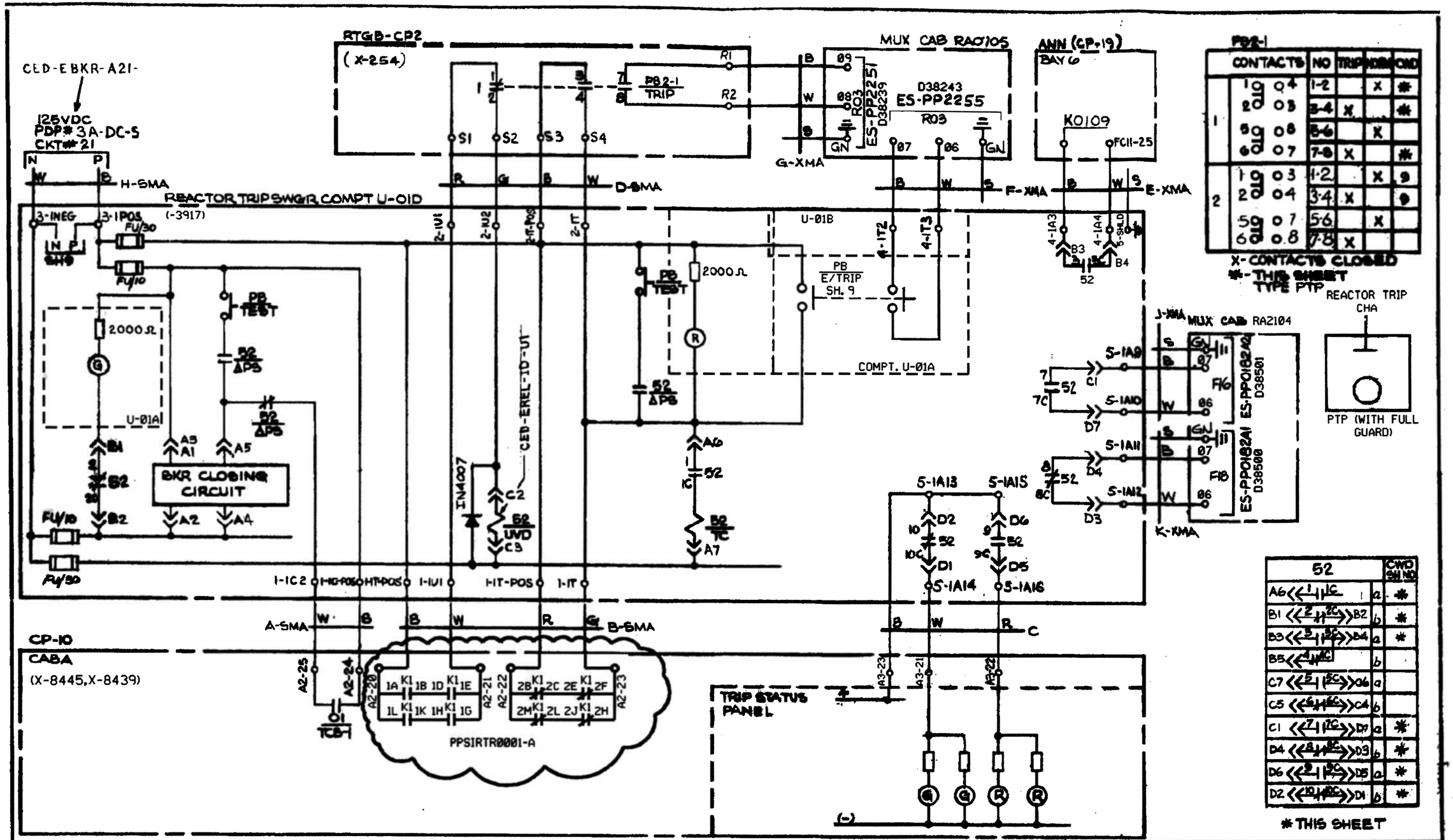

This drawing was used in its entirety to scan and rasterize to produce this revision, REV 11.

(-910,X-7182,X-7183)

REV.	DATE	BY	APPROVAL
15	10-31-97	THS	RJC MS
14	10-6-97	ML	RJC JR
13	7-6-95	ML	RJC N/A

EBASCO SERVICES INCORPORATED
NEW YORK

DIV. X&C DR. REL
SCALE NONE CK. KP
DATE SEP 3, 1 7

LOUISIANA POWER & LIGHT CO.
WATERFORD S.E.S. UNIT No.3
CONTROL WIRING DIAGRAM
REACTOR TRIP BREAKER TCB 1

B424
SHEET 5

filename: 00002880.bwa

INCORP DRN E9702950

SRO Question 17

SRO question 17 was written for system 033, Spent Fuel Pool Cooling. The write up that follows is to request a change to the answer key to allow both selections C and D to be correct. The basis for this request is that the question stem was unclear and confused the applicants, since the distractor used for part 2 of selection D is also correct when considering the water level effect in the Refueling Cavity.

The question provided alarms consistent with a low level in the Spent Fuel Pool, as well as the alarms associated with a Fuel Pool Pump trip. A trip signal is generated for the Fuel Pool Pumps from FS-ILS-2000 at a level of 41 feet 6 inches MSL. The setpoint for the Fuel Pool low level alarm given in the question stem is 43 feet 9 inches. The question also provided that a full core offload was in progress.

With fuel transfer between the Refueling Cavity and the Spent Fuel Pool in progress, FHS-201, Fuel Transfer Tube Isolation, is required to be open. This establishes a connection between the Spent Fuel Pool and the Refueling Cavity. With FHS-201 open, there can be differences between the level in the Spent Fuel Pool and the Reactor Cavity due to differences in the pressure between the Fuel handling Building and the Containment Building. The difference in level due to this pressure difference is minimal. Therefore, in this arrangement, the 2 levels are essentially equal.

Tech Spec 3.9.10.1 states that at least 23 feet of water shall be maintained over the top of the reactor pressure vessel flange. With the Reactor Pressure Vessel flange at 20 feet MSL, the required water level is 43 feet MSL. This Tech Spec is applicable during movement of fuel assemblies within the reactor pressure vessel when either the fuel assemblies being moved or the fuel assemblies seated within the reactor pressure vessel are irradiated. The action statement for this Tech Spec is to suspend all operations involving movement of fuel assemblies within the pressure vessel.

The alarms given in the question established a water level no higher than 41 feet 6 inches. With FHS-201 open and the 2 pools connected, the water level in the Refueling Cavity did not meet the requirements of Tech Spec 3.9.10.1.

Tech Spec definition 1.9 describes core alterations as the movement or manipulation of any component within the reactor pressure vessel with the vessel head removed and fuel in the vessel. Suspension of CORE ALTERATION shall not preclude completion of movement of a component to a safe conservative position.

The recommended change to the SRO Written Exam Worksheet and associated answer key is to accept both answers C and D as correct. With the combination of the water level in the Refueling Cavity less than the requirements in Tech Spec 3.9.10.1, the Tech Spec action to suspend all operations involving movement of fuel assemblies within the pressure vessel, and the definition of core alteration in Tech Spec section 1.9, distractor D is also a correct action for the CRS to carry out. Selections A and B remain incorrect since the temperature alarms given in the question stem are related to the loss of Fuel Pool Cooling flow, not an indication of a Component Cooling Water malfunction. Entering OP-901-510, Component Cooling Water System Malfunction, is incorrect, making distractors A and B incorrect.

Comments were raised by students after the exam related to this concept. They also reported that if filling the position of refueling SRO, they would choose to suspend core alterations on a loss of water event as they received information of uncontrolled water level loss.

Performance on this question was that of the 8 applicants that took the SRO exam, 4 got the question correct. Of the 4 applicants that got the question wrong, all 4 picked the distractor discussed above.

For the reasons cited above, we request a change to the answer key to allow both selections C and D to be correct. The basis for this request is that the question stem was unclear and confused the applicants, since the distractor used for part 2 of selection D is also correct when considering the water level effect in the Refueling Cavity.

SPO Question 17

REFUELING OPERATIONS

3/4.9.10 WATER LEVEL - REACTOR VESSEL

FUEL ASSEMBLIES

LIMITING CONDITION FOR OPERATION

3.9.10.1 At least 23 feet of water shall be maintained over the top of the reactor pressure vessel flange.

APPLICABILITY: During movement of fuel assemblies within the reactor pressure vessel when either the fuel assemblies being moved or the fuel assemblies seated within the reactor pressure vessel are irradiated.

ACTION:

With the requirements of the above specification not satisfied, suspend all operations involving movement of fuel assemblies within the pressure vessel.

SURVEILLANCE REQUIREMENTS

4.9.10.1 The water level shall be determined to be at least its minimum required depth within 2 hours prior to the start of and at least once per 24 hours thereafter during movement of fuel assemblies.

SRO Question 17

CORE ALTERATION

1.9 CORE ALTERATION shall be the movement or manipulation of any component within the reactor pressure vessel with the vessel head removed and fuel in the vessel. Suspension of CORE ALTERATION shall not preclude completion of movement of a component to a safe conservative position.

COLR - CORE OPERATING LIMITS REPORT

1.9a The CORE OPERATING LIMITS REPORT is the Waterford 3 specific document that provides core operating limits for the current operating reload cycle. These cycle-specific core operating limits shall be determined for each reload cycle in accordance with Technical Specification 6.9.1.11. Plant operation within these operating limits is addressed in individual specifications.

DOSE EQUIVALENT I-131

1.10 DOSE EQUIVALENT I-131 shall be that concentration of I-131 (microcuries/gram) which alone would produce the same thyroid dose as the quantity and isotopic mixture of I-131, I-132, I-133, I-134, and I-135 actually present. The thyroid dose conversion factors used for this calculation shall be those listed in ICRP-30, Supplement to Part 1, Pages 192-212, Tables titled, "Committed Dose Equivalent in Target Organs or Tissue per Intake of Unit Activity."

Ē - AVERAGE DISINTEGRATION ENERGY

1.11 Ē shall be the average (weighted in proportion to the concentration of each radionuclide in the reactor coolant at the time of sampling) of the sum of the average beta and gamma energies per disintegration (in MeV) for isotopes, other than iodines, with half-lives greater than 15 minutes, making up at least 95% of the total noniodine activity in the coolant.

ENGINEERED SAFETY FEATURES RESPONSE TIME

1.12 The ENGINEERED SAFETY FEATURES RESPONSE TIME shall be that time interval from when the monitored parameter exceeds its ESF actuation setpoint at the channel sensor until the ESF equipment is capable of performing its safety function (i.e., the valves travel to their required positions, pump discharge pressures reach their required values, etc.). Times shall include diesel generator starting and sequence loading delays where applicable. The response time may be measured by any series of sequential, overlapping, or total steps so that the entire response time is measured. In lieu of measurement, response time may be verified for selected components provided that the components and methodology for verification have been previously reviewed and approved by the NRC.

FREQUENCY NOTATION

1.13 The FREQUENCY NOTATION specified for the performance of Surveillance Requirements shall correspond to the intervals defined in Table 1.1.

volume of 36 ft^3 and is rated at 150 gpm at 15 psid. The function of this unit is to remove ionic matter from the water using a borate form anion resin and a hydrogen form cation resin. A flow distributor located in the inlet to the resin bed prevents channeling of the resin, and a retention element and wye strainer on the outlet of the ion exchanger precludes resin bead discharge to the SFP. Resin fill and flush connections are provided for resin replacement.

Differential pressure instrument FS-IDPI-416 may be lined up to compare the inlet and outlet pressure of the ion exchanger and provide a local indication. This differential pressure is then used to determine ion exchanger loading. FS-IDPI-416 may also be lined up to measure the inlet pressure of the ion exchanger and the outlet pressure of the strainer. This enables the operator to determine the combined pressure drop across the ion exchanger and the strainer.

FUEL POOL PURIFICATION FILTER

The Fuel Pool Purification Filter (Fig 3), located upstream of the ion exchanger, is provided to remove particles larger than 5 microns in size. This filter is a single element resin bonded, glass fiber and polyester cartridge.

Due to the build-up of highly radioactive particles in the filter, the unit is designed and installed to provide removal of the filter element using remotely operated handling equipment. The filter is equipped with drains that drain to a collection header in the Waste Management system.

Differential pressure instrument FS-IDPI-415 measures the pressure drop across the filter and provides a local indication on the west wall of the filter cubicle. This pressure drop is then used to determine filter loading.

SPENT FUEL POOL

The SFP provides storage for 1849 fuel assemblies on fuel racks designed to support the fuel without damage, and maintain adequate spacing to ensure Keff less than 0.95 (The total number of fuel assemblies that can be stored in the SFP, Cask Storage Area and Refueling Canal is 2398). This spacing also allows for sufficient cooling of the fuel assemblies. The SFP volume of 317,814 gallons ensures that the fuel will be covered by at least 23 feet of borated water. Water in the SFP is maintained at a boron concentration of 2050 - 2300 ppm during refueling operations when the SFP and cavity are connected. Table 3 lists the chemistry requirements for the SFP water. If the SFP was flooded with unborated water, Keff would be no greater than .995 due to the use of Boral fabricated into each fuel rack assembly and no greater than .945 if flooded with borated water.

The SFP is provided with a leakage detection system which consists of several tell-tale drains located between the steel pool liner and the concrete foundation at all of the

SRC Question 17

weld seams. Any liner leakage would flow into one of these tell-tale flow channels. The exact leak location can then be determined by pressurizing the leakage channel, and looking for bubbles in the SFP.

SFP temperature is monitored by FS-ITE-2000 input to PAC, which provides a PMC indication, and a FUEL POOL TEMP. HIGH annunciator at 135°F (reset 100°F) on CP-2 in the Control Room. If moving spent fuel and SFP temperature reaches 135°F, Operations department procedures require suspending spent fuel movement and raising the frequency of monitoring SFP temperature. The Fuel Pool Purification Pump should also be secured to prevent resin damage in the Fuel Pool Ion Exchanger.

SFP level is monitored by level switch FS-ILS-2000, which provides a FUEL POOL LEVEL HIGH annunciator at 44'3" (reset 44'1"), and a FUEL POOL LEVEL LO annunciator at 43'9" (reset 43'11") on CP-2. **(FS-ILS-2000 also supplies trip signals to Fuel Pool Cooling Pumps A & B and the Purification Pump if SFP level drops to 41'6").** Reg. Guide 1.13 directs that remote and local alarms are available to indicate the loss of SFP level. The FUEL POOL LEVEL LO annunciator at 43'9" will also actuate a horn and warning lights (the lights are wired in parallel) on local control panel LCP-53 (Figure 5) which is located on the +46 elevation of the FHB North wall. The panel is also equipped with a TEST/SILENCE switch. The TEST position allows operators to test the horn and lights. The SILENCE position will immediately silence the horn if a FUEL POOL LEVEL LO condition exists, but the lights will not extinguish until the low level condition has been cleared for 5 minutes.

A local level plate within the SFP allows an operator to visually inspect pool level to ensure the level remains above 43' which corresponds to 23' above the fuel assemblies.

The design of the Fuel Pool Cooling System is such that the pool can not be inadvertently drained below 40' MSL. This is accomplished by the use of siphon breakers on the return piping of the Fuel Pool Cooling Pumps and the suction piping of the Purification Pump being cut at the +40'6" elevation. The siphon breakers are holes drilled in the fuel pool cooling pipe at elevation 40'6", which will prevent draining the SFP below this level through this line. The fuel pool cooling return piping extends down to 36'6".

SFP SKIMMER

Prior to DCP-3465, SFP Rerack, the SFP skimmer was designed to remove surface debris from the surface of the SFP, which enhances visibility into the pool. The skimmer was nothing more than a trough located at the pool surface. The surface water and debris flowed into the trough and through a strainer to the Purification Pump suction. As part of DCP-3465, the trough was removed from the SFP. A small portion of the skimmer piping was left to provide a means to hook up a portable skimmer to the suction of the Purification Pump.

SRO Question 17

9.5 FUEL MOVEMENT

[P-5838, P-6540]

CAUTION

RX THE FOLLOWING SECTION HAS THE POTENTIAL TO AFFECT CORE REACTIVITY.

[INPO 06-006]

(Initial/Date)

9.5.1 When notified by Refuel Group, then fill Refueling Cavity to approximately 44 feet in accordance with either Attachment 9.20, Raising Refuel Cavity Level Using a LPSI Pump or Attachment 9.22, Raising Refuel Cavity Level Using a HPSI Pump, in preparation for fuel movement. **[P-13421]** _____/_____

NOTE

FHS-201, Fuel Transfer Tube Isolation, is a reverse operated valve. It requires approximately 600 turns to fully stroke valve.

9.5.2 When Refuel Cavity has been filled to approximately 44 feet, then direct Refuel Group to open FHS-201, Fuel Transfer Tube Isolation, by turning the T-Handle in the CLOCKWISE direction. **[P-13527]**

9.5.3 Prior to Core Alterations, ensure Attachment 9.18, Pre Core Alteration Checklist, is complete. _____/_____

9.5.4 Verify Containment Closure Requirements will be met for fuel movement per Attachment 9.12, Containment Closure Requirements. _____/_____