United States Nuclear Regulatory Commission Official Hearing Exhibit
In the Matter of: Entergy Nuclear Operations, Inc.
(Indian Point Nuclear Generating Units 2 and 3)
ASLBP #: 07-858-03-LR-BD01
Docket #: 05000247 | 05000286
Exhibit #: ENT000079-00-BD01 Identified: 10/15/2012
Admitted: 10/15/2012 Withdrawn:
Rejected: Stricken:
Other:

ENT000079
Submitted: March 28, 2012

CSI TECHNOLOGIES, INC.
Consulting Engineers

CALCULATION APPROVAL COVER SHEET

Document Title: Indian Point Unit 3
CHECWORKS SFA Model

Document No.: 0705.100-01

Client: Entergy Nuclear Northeast

Project No.: 0705.100

This calculation has been prepared in accordance with Section 4.3 of the CSI Quality System Manual, Revision 2.

Revision: 0 (For-Use) 1420 pages

Prepared: _____ Date: 11/14/2007
Al A. Sipkovsky (CSI)

Verified: _____ Date: 11/14/2007
David W. Windhorst (CSI)

Approved: _____ Date: 11/14/2007
Daniel R. Poe (CSI)

Approved: _____ Date: _____

Revision Control Sheet

Project Number: **0705**
Project Name: **IPEC 3**
CHECWORKS SFA Model Calibration
Client: **Entergy Nuclear Northeast**
Document Title: **Indian Point Unit 3 CHECWORKS SFA Model**
Document Number: **0705.100-01**

Rev.	Date	Description of Changes	CSI Approval	Client Approval
A	10/07/07	Initial Issue – For Comment	N/A	N/A
0	11/14/2007	Issued For-Use	DRP	

Indian Point Unit 3
CHECWORKS SFA Model

Calculation No. 0705.100-01
Revision 0
Issued For-Use

November 14, 2007

Prepared for:

Entergy Nuclear Northeast
295 Broadway Suite 3
PO Box 308
Buchanan, NY 10511-0308

Prepared by:

CSI TECHNOLOGIES, INC.
1051 E. Main St., Suite 215
East Dundee, IL 60118

Copyright © 2007 CSI Technologies, Inc. All rights reserved.

The information in this document belongs to CSI Technologies, Inc. It may not be used, reproduced, or disclosed without the written approval of CSI Technologies, Inc.

Disclaimer and Limitation of Liability

CSI Technologies, Inc. ("CSI") has made efforts to ensure the accuracy and completeness of the information in this document. However, CSI makes no warranties of any kind (whether express, implied, or statutory) with respect to the information contained herein. CSI assumes no liability to any party for any loss or damage (whether direct or indirect) caused by any errors, omissions, or statements of any kind contained in this document.

Further, CSI assumes no liability arising from the application or use of the product, service, or results described herein and specifically disclaims any representation that the products, services, or results described herein do not infringe upon any existing or future intellectual property rights. Nothing herein grants the reader any license to make, use, or sell equipment or products constructed in accordance with this document. Finally, all rights and privileges related to any intellectual property right described herein are vested in the patent, trademark, or service mark owner, and no other person may exercise such rights without express permission, authority, or license secured from the patent, trademark, or service mark owner.

Trademarks

CSI Technologies, Inc., the CSI logo, and other trademarks, service marks, and logos are registered or unregistered trademarks of CSI and its subsidiaries in the United States and in foreign countries. Other trademarks and service marks in this document are the property of their respective owners.

Table of Contents

1. INTRODUCTION 2

2. PURPOSE 3

3. SCOPE 4

4. ASSUMPTIONS AND MODELING DECISIONS 5

4.1. GLOBAL ASSUMPTIONS AND MODELING DECISIONS 5
4.2. COMPONENT ASSUMPTIONS AND MODELING DECISIONS 7
4.3. UT INSPECTION ASSUMPTIONS AND MODELING DECISIONS 9

5. METHODOLOGY 11

5.1. PLANT GLOBAL DATA 11
5.2. LINE DATA 14
5.3. COMPONENT DATA 15
5.4. UT INSPECTION DATA 20
5.5. NETWORK FLOW ANALYSIS 26
5.6. WATER CHEMISTRY ANALYSIS 26
5.7. WEAR RATE ANALYSIS 26

6. RESULTS 30

6.1. PASS 1 ANALYSIS RESULTS 30
6.2. PASS 2 ANALYSIS RESULTS 30
6.3. DISCUSSION OF RESULTS 30

7. REFERENCES 33

APPENDIX A: CHECWORKS MODEL CHANGE HISTORY
APPENDIX B: PASS 2 WEAR RATE ANALYSIS SUMMARY
APPENDIX C: CHECWORKS GLOBAL DATA
APPENDIX D: CHECWORKS MODELED LINES
APPENDIX E: COMPONENT SUMMARY REPORT UT
APPENDIX F: INSPECTION DATA
APPENDIX G: WATER CHEMISTRY ANALYSIS
APPENDIX H: PASS 1 WEAR RATE ANALYSIS
APPENDIX I: PASS 2 WEAR RATE ANALYSIS

ATTACHMENT A: REFERENCED CORRESPONDENCE AND COMMUNICATIONS

1. Introduction

Flow-Accelerated Corrosion (FAC) is a form of material degradation that results in thinning of the inside pipe wall in carbon steel piping and fittings under certain flow and chemistry conditions. Undetected FAC-induced wall thinning may cause a pipe to leak or rupture, potentially causing injury to plant personnel and/or plant shutdown. For these reasons, and in response to regulatory requirements, Indian Point 3 Nuclear Power Plant (IP3) has developed and implemented a program to monitor and mitigate FAC-induced wall thinning in high energy, large-bore piping systems [7.1].

This report uses plant design and operation information to document the CHECWORKS model for IP3. It documents the CHECWORKS Pass 1 analysis to generate a wear rate prediction for every piping component modeled in CHECWORKS. Component inspection data through the Refuel Outage 14 was imported to the model where available. A Pass 2 analysis was performed on all lines to provide wear predictions calibrated to the inspection data, as well as remaining life based upon measured wear rates for inspected components. The results of these analyses can be used to select components for inspection in order to mitigate pipe deterioration due to FAC.

This calculation replaces all previous CHECWORKS model calculations used to document the IP3 model. Previous CHECWORKS model calculations are listed in the References [7.19].

2. Purpose

The purpose of CHECWORKS FAC is to generate relative rankings by wear rate for piping components within the scope, to generate wear rate predictions calibrated to the inspection data, and to predict remaining life based upon predicted wear rate. The results of the CHECWORKS model predictions can be used to select components for inspection in order to monitor pipe deterioration due to FAC.

The purpose of this calculation is to document the development of the CHECWORKS model. Additionally, this calculation provides the results of the CHECWORKS model Pass 1 and Pass 2 predictions and evaluates the accuracy of the predictions compared to actual measurements.

3. Scope

The large-bore FAC monitoring program has a clearly defined scope and has been in place for several years. The scope of the current FAC inspection program includes the following systems:

- Condensate
- Extraction Steam
- Feedwater
- Heater Drains
- Moisture Preseparator Drains
- Moisture Separator Drains
- Reheater Drains

Selected lines from the above systems are modeled in the IP3 CHECWORKS Model. The lines from these systems that are a part of the CHECWORKS Model scope are listed in Appendix D.

The CHECWORKS model reflects plant design and operation through Refuel Outage 14. All historical records (i.e. inspections, replacements, water chemistry, power levels, etc.) through Refuel Outage 14 were included in this analysis. Note that this model addresses changes due to Appendix K Uprate and Stretch Power Uprate [7.19.1]. Future updates to the FAC program (additional inspections, replacements, chemistry, power uprates, etc.) should be addressed in subsequent revisions of this document.

This analysis was performed using CHECWORKS FAC version 2.2 SP-1 (build 70).

Assumptions and modeling decisions made during this analysis are documented in Section 4. The methodology employed during this analysis is detailed in Section 5. Results obtained are listed in Section 6 and in the Appendices. Finally, Section 7 includes a list of all references used in this analysis.

4. Assumptions and Modeling Decisions

The following assumptions and modeling decisions apply to the Indian Point Unit 3 CHECWORKS model. The assumptions and modeling decisions are categorized below based on the range of their influence. See Appendix A for all historical changes to the model.

4.1. Global Assumptions and Modeling Decisions

4.1.1. In general, when modeling decisions or matters of interpretation arise, the plant is modeled to reflect actual conditions as closely as possible. This information can be obtained from heat balance diagrams, PEPSE models, hydraulic analyses, sample data readings, input from system engineers, etc. This realistic approach results in the most accurate and realistic model possible, not necessarily one that results in a higher predicted wear rate for a particular component. Because the results of the model will be considered when deciding which components to inspect, and because only a finite number of the modeled components will actually be inspected, realistic and accurate modeling is imperative to the decision making process. For instance, entering an unrealistically high flow rate for a particular component will result in a high-predicted wear rate for that component. If the model consisted of only that one component, this could be considered a conservative approach. However, because the model consists of many components, artificially or unrealistically raising the predicted wear rate for one component may cause that component to be selected for inspection at the expense of another with a higher actual wear rate. Therefore, the plant was modeled as realistically as possible. If additional conservatism is needed, it can be built into the FAC program by increasing the size of the inspection sample.

4.1.2. All input information was assumed to be correct from the previously verified CHECMATE model. Where discrepancies were found, engineering judgment was used to model the system as realistically as possible.

4.1.3. Small taps and drains off the main piping that do not significantly affect the flow rate or cause a flow disturbance were not modeled.

4.1.4. Replaced components were added to the model with materials and schedule according to Addendum A to Spec. No. 6604-104-248-4 [7.15]. Replacement dates used were either the first day of the outage in which the work was done or, for work done in 1994, as 1/1/94.

4.1.5. In multiple train systems, when one or more trains are in standby during normal operation, a duty factor is applied to the Wear Rate Analysis runs containing those lines. When one of these trains flow into or out of a header, a duty factor cannot be applied if the time of operation for portions of the header varies, which will usually be the case. Instead of applying a duty factor, flow rate was scaled back and the component was modeled to operate 100% of the time. For each component (or portion of component in the case

of tees), the average flow over time is calculated and entered. In this way, if a particular component experiences a flow of 1.2 Mlb/hr for one-third of the time, and no flow for the other two-thirds, the flow for that component is entered as 0.4 Mlb/hr. This process is the best possible option and is equivalent to the recommendation presented in option 3 of the section entitled "Cyclic Usage of Lines" of the EPRI Advanced CHECWORKS Training Manual [7.6].

4.1.6. Water Treatment for future operating cycles was assumed to match the most recent completed operating cycle. The current water treatment will be updated when the data becomes available.

4.1.7. Parallel trains of equal pipe diameter were assumed to have equal flow unless otherwise indicated.

4.1.8. For a number of lines on the Heat Balance Diagrams [7.18], thermodynamic and flow values (pressure, enthalpy, and flow rate) were listed separately for the steam phase and the water phase or for each train in a parallel train configuration. The overall flow rate, pressure, and enthalpy of these lines were calculated and entered in the CHECWORKS Steam Cycle (see Section 5.1.3). The combined flow rate was calculated as the sum of the liquid and steam flow rates (or the sum of multiple trains), the combined pressure was calculated as the average of all pressures, and the enthalpy was calculated as the weighted average of liquid and steam enthalpy (or the weighted average of multiple trains). These calculations were performed based on EPRI's "Guidelines for Plant Modeling and Evaluation of Component Inspection Data" [7.3].

4.1.9. When hydrazine data was not available at the Steam Generator Outlet and MSR Drain, the "rules of thumb" [7.3] for a Recirculating Steam Generator were applied to all chemistry cycles. Based on the "rules of thumb", the concentration of hydrazine at the Steam Generator Outlet was assumed to be 60% of the final feedwater concentration, while the concentration of hydrazine at the MSR Drain was assumed to be 120% of the final feedwater concentration.

4.1.10. Plant period data was estimated for the cycle where the SPU will occur. Start and end dates were estimated based on anticipated dates [7.19.1]. An estimation of operating hours was calculated from these dates based on calendar days. The model can be updated with actual values for these inputs when this data becomes available.

4.1.11. The CHECWORKS HBD in the input model had the Boiler Feed Pump modeled as an electric pump instead of a steam driven pump. The CHECWORKS HBD was corrected to portray the Boiler Feed Pump as a steam driven pump.

4.1.12. Because the Boiler Feed Pump was remodeled as a steam driven pump, Steam Cycle Data was input for the original power level in addition to the Appendix K and SPU power levels for this location. Flow rate was obtained from the original HBD [7.18.1]. Feed Pump Turbine drain pressure and enthalpy was not shown on the original HBD; therefore, the original pressure and enthalpy was assumed to be equivalent to the SPU pressure and enthalpy as shown on the SPU HBD [7.18.3]. Note that this assumption has little impact on the model as no components in the Feed Pump Turbine drain are modeled.

4.1.13. The flow rate in the Feedwater Pump Recirculation lines was shown as zero on the SPU Heat Balance [7.18.3] and Appendix K Heat Balance [7.18.2]. In general flow through such lines is zero under normal operation, so a heat balance is not a good source for determining this flow. Therefore, an assumption was made that the flow rate under SPU and Appendix K conditions was equivalent to the flow rate under original pre-uprate conditions as defined in the input CHECWORKS model (the as-received model) [7.21]. Note that all components in these lines are constructed with FAC-resistant material, so this assumption has little to no impact on wear rate predictions.

4.2. Component Assumptions and Modeling Decisions

4.2.1. General

4.2.1.1. Replacement dates used the first day of the outage in which the work was done. The replacement date 1/1/94 was used for work done in 1994.

4.2.2. Nozzles

4.2.2.1 In some cases, the imported CHECMATE data listed nozzle material as A234 WPB. When this occurred, the nozzle material was changed in CHECWORKS to A106 Grade B. The change was made because nozzles are generally fabricated from A106 Grade B, a piping material, rather than A234 Grade WPB, a fitting material. When the imported CHECMATE data listed nozzle material as other than carbon steel, the material code was left as-imported.

4.2.2.2 Nozzle materials SA508 CL3 and A240 TP321 were added to the material table.

4.2.2.3 When necessary for the calculation of the length of adjoining pipe, nozzles were assumed to have a length of 1/2 times the nominal pipe size. This has no effect on the predicted wear rate of the nozzle.

4.2.3. Straight Pipes

4.2.3.1. Pipe lengths were imported from the previously verified CHECMATE model when available. Pipe lengths were rounded to the nearest inch.

4.2.4. Valves

4.2.4.1. Valves were modeled with the material, thickness and diameter from the CHECMATE model.

4.2.4.2. When necessary for the calculation of the length of adjoining pipe, valves were assumed to have a length of 1.5 times the nominal pipe size. This has no effect on the predicted wear rate of the valve.

4.2.5. Orifices, Flanges, and Expansion Joints

4.2.5.1. Flow elements were assigned Geometry Code 6 with an orifice diameter equal to 90% of the inside diameter of the pipe. The downstream pipe was assigned Geometry Code 56.

4.2.6. Elbows

4.2.6.1. Elbows were assumed to be standard radius unless otherwise indicated.

4.2.6.2. Per EPRI recommendations [7.3], elbows cut to an angle between 0° and 45° were modeled as 45° elbows.

4.2.6.3. Per EPRI recommendations [7.3], elbows cut to an angle between 46° and 90° were modeled as 90° elbows.

4.2.6.4. Per EPRI recommendations [7.3], elbows cut to an angle between 91° and 180° were modeled as 180° returns.

4.2.7. Tees, Crosses, and Headers

4.2.7.1. All tees were left with the material that is associated to them from the CHECMATE model.

4.2.7.2. In cases where tees were modeled twice in CHECMATE, the branch component was deleted in this model and the associated information entered to the main component.

4.2.7.3. Per EPRI recommendations [7.3], crosses were modeled as type 11 tees with one main and one branch.

4.2.7.4. All tees were assumed to be fabricated when determining

pipe material and schedule.

4.2.8. Piping Material and Schedule

4.2.8.1. Materials A217-C5 and A155 EFW Grade C55 Class 2 were added to the material library.

4.2.9. Design and Operating Conditions

4.2.9.1. The design pressures and temperatures that were imported from the previously verified CHECMATE model were used.

4.3. UT Inspection Assumptions and Modeling Decisions

4.3.1. In cases where there was insufficient information regarding the direction the inspection was taken, it was assumed that the numbers were axial, parallel to flow, and letters were clockwise radial, perpendicular to flow.

4.3.2. Version 1.0F of CHECWORKS did not recognize UT data imported as the downstream extension of nozzles. To compensate for this, the calculated wear was entered as user-specified wear, at that time. This bug was corrected in Version 1.0G of CHECWORKS, and the calculated wear for the downstream extension of nozzles does not have to be user-specified.

4.3.3. Prior to 3RO13, inspections performed online during the final days of an operating cycle were imported to the first day of the following refueling outage. Note that this has a minimal effect on predicted wear rates and service life as the operating hours are off by a small margin.

4.3.4. A number of inspections were performed over a month prior to 3RO13. Because this was an extended period of time, these inspections were imported to Cycle 13, not to the upcoming outage. The operating hours were adjusted accordingly to account for any difference in predicted wear.

4.3.5. In cases where a counterbore was present, the counterbore was excluded from the calculation of lifetime wear. However, the lowest reading from the counterbore area was used for the calculation of time to T_{crit}.

4.3.6. See Appendix F for any changes (excluding points, excluding counterbore rows, etc.) made to the UT data after importation.

4.3.7. For Outage RO14, any measured that was found to be less than .030" or 5% of T_{nom} was excluded in the calculation of the LCF. This check was performed automatically when the data was imported from FAC Manager [7.28] to CHECWORKS SFA. In cases where this occurred, the wear was set to zero in SFA but the wear measurement was maintained in FAC Manager.

4.3.8. For Outage RO14, all inspection dates were set at the first day of the outage (March 7, 2007). This will have no impact on the time remaining to T_{crit} since SFA uses in service hours to calculate remaining life.

4.3.9. For Outage RO14, only components that were found in CHECWORKS SFA were imported from FAC Manager. The other inspections that did not fit these criteria were assumed to not be in the official CHECWORKS model.

4.3.10. Subcomponents with the suffix "BR-DSX" in FAC Manager were imported to the branch extension in SFA.

5. Methodology

The development of the CHECWORKS model included inputting the Plant Global Data, Line Data, Component Data, and UT Inspection data.

5.1. Plant Global Data

CHECWORKS Plant Global Data pertains to the entire model, and includes the Heat Balance Diagram, Plant Power Level Data, Plant Steam Cycle Data, Plant Water Treatment Data, and Plant Period Data.

5.1.1. Heat Balance Diagram

The Indian Point 3 Heat Balance Diagrams were used to create the CHECWORKS Heat Balance Diagram (HBD) [7.18]. Represented on the HBD are all elements necessary to allow Water Chemistry Analysis to accurately calculate hydrazine and other constituent concentrations around the steam cycle. Also, the association of lines to the HBD allows the correct operating conditions to be applied to each line. Note that the CHECWORKS HBD numbering of the Feedwater Heaters, Reheaters, and Extraction Steam Lines proceeds from highest pressure item to lowest pressure item. However, IP3 uses the reverse order of the CHECWORKS HBD for the Feedwater Heaters. Therefore, IP3 items are not the same number as the CHECWORKS items. For example, IP3 #21 Feedwater Heater is the CHECWORKS #6 Feedwater Heater, IP3 #22 Feedwater Heater is the CHECWORKS #5 Feedwater Heater, and so on.

5.1.2. Plant Power Level Data

A Power Level was defined for each power level at which the plant has operated for a significant period of time or for a proposed level of operation. The power level corresponds to main generator output. A brief description of the fields in the CHECWORKS SFA Power Level form follows. The values input to the model and the reference from which the value was obtained is listed in Appendix C.

- **Power Level:** The Power Level can be defined as a percent between 0 and 200. The initial power level that the plant operated at was labeled as 100%. Later power levels were named as a percentage of power output relative to the initial power level. Table 5.1 lists the power levels and the operating cycles they apply to.

Table 5.1 CHECWORKS Power Levels

Power Level (%)	Power (MWt)	Operating Cycles	Notes
100.00	3045.3	Cycles 1-12A	Original Power Level
101.12	3079.0	Cycles12B-13	Appendix K Uprate
104.95	3196.0	Cycle 14 to End of Life	Stretch Power Uprate SPU

Data was entered for the new power levels on the Power Level Form in accordance with the CHECWORKS User's Guide [7.3].

- **Steam Rate:** The steam mass flow rate out of the Steam Generator was taken from the Heat Balance Diagrams [7.18].
- **Steam Generator/Reactor Vessel Pressure:** The pressure at the outlet of the Steam Generator was taken from the Heat Balance Diagrams [7.18].
- **Steam Generator/Reactor Vessel Temperature:** The temperature at the outlet of the Steam Generator was taken from the Heat Balance Diagrams [7.18].
- **Steam Generator Blowdown Rate:** The blowdown rate was taken from the Heat Balance Diagrams [7.18].
- **Carryover:** The carryover percentage was obtained from the Heat Balance Diagrams [7.18].
- **Feedwater Vent Rate:** This field is not used for a PWR plant.
- **Reheater Vent Rate:** This field is not used for a PWR plant.
- **Moisture Separator Carryunder:** This field is not used for a PWR plant.

5.1.3. Plant Steam Cycle Data

The following Steam Cycle Data is used by CHECWORKS to calculate dissolved oxygen concentrations during wear rate analysis. Steam Cycle Data was entered for each Heat Balance Item at each Plant Power Level. The values input to the model and the reference from which the value was obtained is listed in Appendix C.

- **Power Level:** A Power Level is selected from the pull down menu, which includes all of the power levels entered into the Plant Power Level data discussed in Section 5.1.2.
- **Flow Rate:** This is the flow rate taken from the HBD [7.18] in Mlb/hr. Flow rates were entered for the HBD Items when required.
- **Vent Rate:** Vent rates are not entered for PWR plants.
- **Quality:** The steam quality, from the HBD [7.18], was entered in this location as necessary.
- **Enthalpy:** The enthalpy, from the HBD [7.18], is required for the two-phase lines and was entered as necessary in this field in Btu/lb.
- **Temperature:** The temperature, from the HBD [7.18] was entered in this field as necessary in °F.

- **Pressure:** The pressure, from the HBD [7.18], was entered in this field as necessary in psia.

5.1.4. Water Treatment Data

Water Treatment Data in CHECWORKS consists of name & title, cold pH, dissolved oxygen concentration, single amine, complex constituents, boron injection rate, hydrazine, and ammonia. The values input to the model and the reference from which the value was obtained is listed in Appendix C. Data is entered into the following Water Treatment Data fields:

- **Name & Title:** These two fields contain a descriptive name or title that allows the user to identify the chemistry period.
- **Cold pH:** The cold pH of the condensate is entered into this field if simple water chemistry is used.
- **Dissolved Oxygen:** The dissolved oxygen concentration in the condensate is entered into this field.
- **Single Amine:** If a single amine, rather than a combination of amines, is used, the amine type is entered here.
- **Complex Constituents:** If multiple amines are used, the amine type, their sampling locations, and their concentrations are entered here.
- **Boron Injection Rate:** If boron is injected, the injection rate, sampling location, and the concentration are entered here.
- **Hydrazine Treatment:** Separate sampling location and measured concentration data is entered for ammonia and hydrazine. In addition, hydrazine concentrations at the Steam Generator Outlet and MSR Drain are entered (see Section 4.1.10).

5.1.5. Plant Period Data

CHECWORKS divides plant history into two types of periods: operating and maintenance. Whenever a significant change occurs in the power level or water chemistry for the unit, a new operating period should be defined. For any significant period of plant down time, a maintenance period can be created. The values input to the model and the reference from which the value was obtained is listed in Appendix C. For each period, data was entered to the following fields:

- **Period Name:** A user designated name for a Plant Period was entered in this field.
- **Period Begin Date:** The begin date of the Plant Period was entered in this field.
- **Period End Date:** The end date of the Plant Period was entered in this field.

- **Operating Hours:** The calculated operating hours per period were entered here.
- **Water Treatment:** The appropriate water treatment was selected for each period from a list of all water treatments in the CHECWORKS model.
- **Power Level:** The appropriate power level was selected for each period from a list of all power levels in the CHECWORKS model.
- **Period Type:** The appropriate period type, operating or maintenance was selected for each period.

5.2. Line Data

All components in the CHECWORKS model were grouped into lines. Lines containing components with identical thermodynamic and chemistry conditions are linked to the same CHECWORKS Heat Balance Diagram Line. A listing of all lines that appear in the CHECWORKS model can be found in Appendix D.

For full use of the Advanced Run Definition lines were divided where flow rates change. For conservatism, the tee where flow rate changed was associated to the line having the greatest flow rate (see Figure 5.1). Note that this will over predict the wear for some sections of tees (see Section 4.1.8).

Figure 5-1 Diagram of Line Grouping Convention

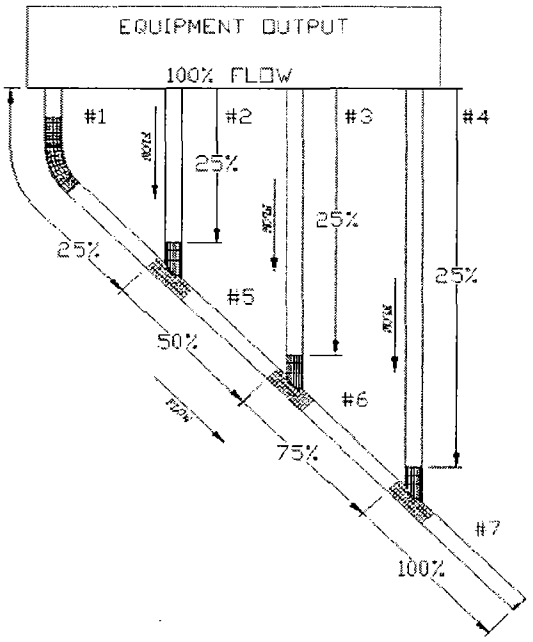

Components were grouped into lines by comparing the input CHECWORKS model [7.21] with FAC isometrics [7.23] and flow diagrams [7.22]. Lines were named according to the naming convention, below.

AA-BB.CC D

AA	= System Abbreviation
BB.CC	= Multi-digit code to identify a plant line or location
D	= Brief line description

Note that the AA-BB.CC portion of the line name corresponds to the plant line name and component name prefix as taken from the flow diagrams [7.22] and FAC isometrics [7.23]. New line names were created as required by CHECWORKS, not where plant line names changed. Therefore, some lines contain components with different component name prefixes, but in general the component prefix and line name agree. Note that if the AA-BB.CC portion of the line name was not unique for CHECWORKS purposes, an underscore followed by a 1, 2, 3 etc. was added to this portion of the line name.

For example, line name "CD-01.1A FWH 31A to FWH 32A" is plant line name CD-01.1A in the Unit 3 Condensate system from Feedwater Heater 31A to Feedwater Heater 32A.

In addition to the line name, the following information was entered in the Line Data From.

- **System:** The name of the system in which the line belongs was entered in this field. This field is optional.
- **Phase:** This is a pull-down menu with three choices: All Water, All Steam, or Wet Steam. This field is optional.
- **Line Group:** This field is used to sort and display the lines. This field is optional.
- **Notes**: A full description of the line and the P&ID that the line is on is entered in this field.
- **Heat Balance Association:** Each modeled line was linked to the appropriate Heat Balance Diagram line, except Z-type lines (see Section 5.7.7). This allows the calculated chemistry, thermodynamic data, and flow rate to be correctly associated to the lines of the model. Please note that this association is not shown on the Line Data Form. Instead, Heat Balance Association appears on the CHECWORKS HBD (see Section 5.1.1).

5.3. Component Data

Component data within CHECWORKS was entered in the Component Data Form,

which contained two tabs: the Main Tab, and the Optional Tab. All component input data is presented in Appendix E.

5.3.1. Component Data Form, Main Tab

The Component Data Form, Main Tab contains key information about the component, including its name, geometry, size, material, operating conditions, and design conditions.

- **Component Name:** Component names are based upon the unique identification system employed at Indian Point 3. The component naming convention includes the system, a numerical identifier, and a letter representing geometry type ("P" for pipe, "T" for tee, "N" for nozzle, etc.). Components in the IP3 model were named according to the convention below:

AA-BB .CC-DDE

AA	Abbreviation of the system (ex: CD = Condensate, EX = Extraction Steam, etc.)
BB	Subsystem Number
CC	Segment Number
DD	Component Number within Segment
E	Component Type Code

Note that there are some exceptions to this naming convention.

- **Geometry**: The geometry was selected from a pull-down menu with a description of the component type (e.g., "STRAIGHT PIPE"). The component type was obtained from isometric drawings [7.23].
- **Geometry Code**: The component type was obtained from the isometric drawings [7.23]. The component geometry code was entered in accordance with the CHECWORKS SFA User's Guide [7.2].
- **Pipe Size**: A pull-down menu contains outside pipe diameter, nominal wall thickness, and schedule. These were determined from piping specifications [7.15].
- **Material**: The material is selected from a pull-down menu containing material choices. Material was determined from piping specifications [7.15]. The material of replacements was taken from the FAC isometrics [7.23] and documentation from IP3 personnel [7.27].
- **Wear Rate Analysis (WRA) Options**: The option selection determines whether or not inspections on the component will be used to calibrate the model. There are four options. "Use Measured Wear for LCF" allows CHECWORKS SFA to use inspection data for the component in the Pass 2 Wear Rate Analysis. "Do Not Use Measured Wear" eliminates the inspection data for the component from the Pass 2 Wear

Rate Analysis. "Exclude From Analysis" eliminates the component itself from Wear Rate Analysis. The option "Use Measured Wear for LCF" is the default option and was selected for the majority of components. Based on the interpretation of inspection data, the option "Do Not Use Measured Wear" was selected if appropriate (see Appendix F). The option "Exclude From Analysis" was generally not used.

Selection of the fourth option "Use D/S Ext. from Prev. Comp" is discussed in Section 5.4.2.2.

- **Operating Data:** Pressure, enthalpy, quality, and temperature can be entered for the component (only two of four required). These values were entered on the component form for cases where operating conditions did not change due to power level changes. See Appendix D for the lines that use the Component Form as the source of operating conditions. The heat balance diagrams (HBD) were used as a first priority [7.18]. When data was not available on the HBD, the flow diagrams were used [7.22].
- **Design Data:** Design pressure and temperature were obtained from the flow diagrams [7.22].
- **Flow Rate** Flow rate was entered on the component form for cases where operating conditions did not change due to power level changes. See Appendix D for the lines that use the Component Form as the source of operating conditions. The heat balance diagrams (HBD) were used as a first priority [7.18]. When data was not available on the HBD, the flow diagrams were used [7.22].
- **Orientation Angle**: Component orientation angle was determined from the isometrics [7.23] in accordance with the CHECWORKS SFA User's Guide [0].
- **Orifice Size**: Orifice size is the inside diameter of the orifice and is entered for all orifices, components modeled as orifices, and for all piping immediately downstream of an orifice. Orifice size was obtained from drawings [7.23] or an assumption was made (see Section 4.2.5).
- **Valve Size and Valve Coefficient**: The valve opening size (Valve Size) and valve flow capacity (Valve Coefficient) is entered in these fields. These fields may be used for lines utilizing Network Flow Analysis (see Section 5.5).
- **Pipe Roughness**: This field specifies the absolute internal roughness for the component. Only lines utilizing NFA use this field (see Section 5.5).
- **Branch or Small End Diameter (Br./S.E. OD)**: Entered in this field is the outside branch diameter for tees, or the small end diameter for

reducers, expanders, reducing elbows, or expanding elbows. This data was obtained from the isometrics [7.23].

- **Branch or Small End Nominal Thickness (Br./S.E. T_{nom})**: Entered in this field is the nominal pipe thickness for the branch of tees, or the small end of reducers, expanders, reducing elbows, or expanding elbows. This data was obtained from piping specifications [7.15].
- **Branch/Bend Angle**: The Branch/Bend Angle may be used to specify the angle between the main run and the branch in the case of a lateral. This data is not used in calculating wear rates and was not entered.

  Elbow R/D: For elbows, the radius to diameter ratio was entered in this field. This data was obtained from the isometrics [7.23] where available. If the Elbow R/D could not be determined from the isometrics, an assumption was made (see Section 4.2.6.1)
- **User Defined Field (1)**: This field was not used.

5.3.2 Component Data Form, Optional Tab

The Optional Tab of the Component Data Form contains information on component size, critical thickness, insulation, location, installation, adjacent equipment, and notes.

- **Length**: The pipe length can be entered in this field. This field is optional for all lines that do not utilize Network Flow Analysis (NFA). For lines utilizing NFA, only the length of straight piping is needed. This data was obtained from the isometrics [7.23].
- **Nominal Thickness**: The nominal thickness of extensions was entered if appropriate. The extension thickness was set equal to the appropriate main component thickness (upstream main, downstream main, or branch). This data is used during UT Analysis wear calculation.
- **Initial Thickness**: The initial thickness was set equal to the nominal thickness.
- **Screening Thickness**: This field can be used to determine color-setting thresholds in the UT Analysis displays. Since this is not used in the prediction of corrosion rate no value was entered.
- **Critical Thickness:** CHECWORKS SFA allows the user to define the Component Critical Thickness (T_{crit}). The T_{crit} field is used to establish the critical thickness criteria for calculating all components' remaining life.

  Since a true engineering calculated T_{crit} value is not available for all components in the CHECWORKS SFA model, generally only for inspected components, engineering calculated values of T_{crit} were not entered into the CHECWORKS SFA model. Instead a uniform method for estimating T_{crit} was established, which would account for both

inspected and non-inspected components. This was done to level the field when ranking components by remaining life to T_{crit}, so that the ranking of inspected components was not skewed compared to the ranking of non-inspected components.

In this model, T_{crit} was set equal to the greatest of T_{long}, an assumed minimum thickness for longitudinal stresses, T_{hoop}, the pipe wall thickness determined from hoop stress allowables, or an administrative limit of 0.100".

T_{hoop} was calculated using the following equations:

$$T_{hoop} = \frac{(D_O \cdot P_D)}{2[S_A + (P_D \cdot Y)]} \qquad [7.8]$$

where:
D_O = Outside Diameter
P_D = Design Pressure
S_A = Allowable Stress
Y = (0.4) constant

T_{long} was an assumed value for the longitudinal stresses. For safety related components it was assumed that T_{long} was equal to 87.5% of the nominal thickness. For non-safety related components, it was assumed that T_{long} was equal to 70% of the nominal thickness.

- **Drawing Name**: This field lists the isometric that the component appears on.
- **Insulation**: The insulation type and insulation thickness fields can be entered for lines utilizing NFA (see Section 5.5).
- **Installation and Replacement Dates:** The dates components are installed or replaced are entered in these fields. When the install date field is empty, the install date is set equal to the plant start date. When the replacement date field is empty, the component is currently in operation.
- **Location and Adjacent Equipment:** Information on component location, and adjacent equipment can be entered in these fields. This information is not required in order to calculate predicted wear rate and was not entered.
- **User Defined Field (2)**: This field was not used.
- **User Defined Field (3)**: This field was not used.
- **Notes**: Comments and notes were entered into this field as appropriate.

5.3.3 Replacements

Replacement records (outage and material) were obtained from the information submitted to CSI from personnel at Indian Point Unit 3 [7.27]. Where replacement material or replacement date was unknown, an assumption was made (see Section 4.1.4).

5.4. UT Inspection Data

UT inspection files may contain grid readings for a main component and extensions. Inspection files for tees may be present in the following subcomponents: main, branch, main downstream extension, main upstream extension, and branch extension. Inspection files for reducers and expanders may be present in the following subcomponents: large end of main, small end of main, main downstream extension, and main upstream extension. For all others, inspection files may be present in the following subcomponents: main, main downstream extension, and main upstream extension.

Once imported to CHECWORKS, the inspection files for the main runs of tees were partitioned into upstream main and downstream main portions. The inspection files for the large end and small end for any reducer or expander are partitioned into large end and small end. All importation was done in accordance with CHECWORKS guidelines [7.3].

Appendix F contains a listing of all UT inspection data that has been imported. UT inspection data was received as UT examination reports [7.25.1] and electronic UT grid files [7.26.1]. For each inspection the following data is listed:

- Line Name
- Component Name
- Period inspection was taken
- Inspection Report Number
- Section of the component that was analyzed
- Wear Method used in analysis
- T_{init} value, or T_{nom} when T_{init} was not defined in CHECWORKS
- Measured Wear
- Whether or not the inspection was used in the calculation of the LCF, and the reason it was not used

Note that in cases where a component or subcomponent has UT data from multiple outages, only one wear value for that component or subcomponent (if any) is used in the calculation of the LCF. The wear data used comes from the most recent inspection available. For example, consider an elbow that was inspected in 2R8 and 2R9, and both inspections were available for use in the LCF. In this case, only the wear from 2R9 would be used. Since the 2R8 inspection is technically still "available" for use in the calculation of the LCF, the decision was made to label the table in Appendix F with "Yes" in the Used in the LCF column for both inspections.

5.4.1. CHECMATE Measured Wear Data

CHECWORKS stores measured data as a grid of wall thickness measurements. However, CHECMATE stores only the initial thickness (T_{init}) and the minimum measured wall thickness (T_{DAT}). During the CHECMATE conversion process, values of measured thickness (T_{DAT}) and initial thickness (T_{init}) were transferred to CHECWORKS. Where CHECMATE had a single field, "T_{nom}", to account for both the initial thickness and the nominal thickness, CHECWORKS has separate fields for both. Therefore, for components with T_{inits} in CHECMATE, the values were imported to the T_{init} field in CHECWORKS, and the nominal wall thickness was entered to the $T_{nom\ field}$. T_{DAT} was converted to measured wear by subtracting T_{DAT} from T_{init}, the resulting value was automatically imported to the "Measured Wear" field in CHECWORKS during importation, and manually checked to ensure accuracy. Inspected components with imported T_{DAT} values are listed in Appendix F.

A potential bug exists in CHECWORKS, for each component where the main component is partitioned into upstream and downstream main portions (i.e., reducers and tees). If user-specified wear (T_{DAT}) is imported to one main portion and not the other for a reducer, or to only 1 out of 3 (U/S main, D/S main, or branch) subcomponents for a tee, CHECWORKS does not recognize this wear in the calculation of the LCF. On the other hand, if user-specified wear (T_{DAT}) is entered to both main portions, or a main and a branch, both values are recognized by CHECWORKS.

5.4.2. UT Inspection Data

UT inspections in the CHECWORKS database were reviewed for correct importation. The grid data manipulation options of transpose, reverse rows, partition, offset, and clockwise/counterclockwise were used to manipulate the CHECWORKS UT grid to match the hardcopy packets as needed. All grid data manipulation techniques were used in accordance with EPRI guidelines [7.3].

5.4.2.1. Upstream and Branch Extensions

In some cases, UT data was taken on an upstream extension or branch extension. Inspection data was imported to the appropriate component section. However, since CHECWORKS FAC does not use these subcomponents in the calculation of an LCF, the "Do Not Use MW" option is not required to be selected for these subcomponents and the data is stored for archival purposes only.

5.4.2.2. Downstream Extensions

Downstream extensions are used in the calculation of an LCF. The fourth WRA option on the Component Data Form, "Use D/S Ext. from Prev. Comp" was selected for instances where both of the

following were true:

- Wear calculation data was available for the downstream pipe extension of a particular main component; and
- The downstream pipe extension is represented in the CHECWORKS FAC model by a piping component immediately following the main component.

This option is selected for the pipe component downstream of the main component containing the UT data.

5.4.3. Single Outage Wear Calculation

Single outage wear is used for components with only one outage of inspection data, for the first outage of components with multiple outage inspection files but no baseline file, for components with multiple outage inspection files without the same grid structure, or based on engineering judgment. The CHECWORKS Wear Calculation Module is accessible from the UT Analysis Form and allows single outage wear to be calculated by three different methods. In the model, single outage wear is calculated by all three available single outage methods. Note, however, that the result of only one of the methods, if any, is used to calculate the LCF during WRA.

5.4.3.1. Band Method

The Band Method calculates the wear for each circumferential band of a component in the range specified. The wear for the entire component is set equal to the maximum value calculated in the range. By default, the range is equal to the entire component, but the range may be altered if regions of the grid are seen to

contain questionable or inaccurate readings. For a particular band, wear is calculated as the difference between the minimum thickness and either the maximum thickness or the initial thickness, whichever is larger. If initial thickness is not entered, the greater of maximum thickness or nominal thickness (T_{nom}) is used.

5.4.3.2. Area Method

The Area Method calculates the wear for a rectangular range specified for a component. The wear for the entire component is set equal to the wear calculated for the area. By default, the area is equal to the entire component, but the range may be altered if regions of the grid are seen to contain questionable or inaccurate readings. For the area, wear is calculated as the difference between the minimum thickness and either the maximum thickness or the initial thickness, whichever was larger. If initial

thickness is not entered, the greater of maximum thickness or nominal thickness (T_{nom}) is used.

5.4.3.3. Blanket Method

The Blanket Method repeatedly calculates the wear for a rectangular region, called a blanket. The blanket is first located at the "upper left" corner of the grid. The blanket is then moved one grid step at a time down the grid. Having reached the bottom of the grid, the blanket returns to the top, one grid step to the right. This motion continues until the entire grid has been blanketed. At each position of the blanket, wear is calculated as the difference between the greater of the average of the two highest readings or T_{init} and the average of the two lowest readings. By default, the blanket size is three grid steps in the longitudinal direction and one third of the component diameter in the circumferential direction. Calculated wear for the component is determined by the greatest blanket wear.

After CHECWORKS calculates component single outage wear using the three methods discussed above, the resulting wear value from just one method was selected as the value to be used by CHECWORKS in the calculation of the LCF. A user-specified value for wear can be chosen instead, or the data can be identified as baseline data by selection of the "Baseline" option. Finally, the option "Do Not Use for LCF" is selected if the wear value for the component will not be included in the calculation of the LCF during Pass 2 WRA. The selection of these options was in accordance with the recommendations made in the EPRI Guidelines [7.3].

5.4.3.4. Method Selection

Selection of the wear calculation method is based upon the component geometry:

Table 5.2 UT Wear Calculation Method Selection

Component Geometry	Single Outage Wear Calculation Method
Elbows, Bends, Reducing Elbows, Expanding Elbows, Eccentric Reducers, Eccentric Expanders, and Forged Tees	Blanket Method
Pipe, Concentric Reducers, Concentric Expanders, and Fabricated Tees	Band Method
All Others	Band Method

The area method is only used based on engineering judgment because it tends to be overly conservative and not as accurate as

the band or blanket methods.

5.4.4. Multiple Outage Wear Calculation

Multiple outage wear, also known as Point-to-Point wear, can be calculated for a component between the inspections from two outages, or between baseline data and the first outage inspection. For components with multiple outage wear calculations, two methods are available in CHECWORKS FAC for calculating the component's lifetime wear. "Max. Point to Point + Past Wear" combines the lifetime wear calculated upon the first selected outage and the maximum measured difference between the two selected outages. "Avg. Point to Point + Past Wear", on the other hand, combines the lifetime wear calculated upon the first selected outage and the average measured difference between the two selected outages. The "Max. Point to Point + Past Wear" method was generally used in multiple outage wear calculations.

The option "Treat Neg. Wear as Zero" was selected to eliminate calculated negative wear caused by variances in measurements.

5.4.5. Exclusion of Measured Wear

The option "Do Not Use MW" or "Do Not Use Measured Wear" was selected given any of the following conditions.

- The component was neither an elbow, bend, reducer, expander, tee, nozzle, nor pipe.
- Measured Wear was less than or equal to 0.030" or 5% of nominal thickness.
- Measured wear was not representative of actual FAC wear.
- The component material was not susceptible to FAC wear.
- Inspection removed based on engineering judgment.
- The component operated at non-susceptible conditions (no flow).
- The component was small bore.
- Inspection was performed on a nozzle or tee and there was not sufficient correlation between these data points and those of components with other geometry types.

Nozzles and tees were examined on a case-by-case basis to determine whether they should be included in the calculation of the LCF. If there is sufficient correlation between these data points and those of components with other geometry types, the measured wear was used. Otherwise, the "Do Not Use Any Measured Wear" option was selected on the Component Data Form.

5.4.6. Minimum Measured Thickness (T_{meas})

The Minimum Measured Thickness (T_{meas}) value is involved in predicting thickness and remaining service life. A lower value results in a shorter remaining service life.

CHECWORKS FAC allows a number of options to determine the value of the minimum measured thickness (T_{meas}) of an inspected component. "Min. Meas Thickness from Region of Max. Wear" (GW) uses the smallest thickness value from the region that has the highest wear. This option is selected by default if the wear calculation uses the band, blanket, or area methods. The second option used, "Minimum Measured Thickness" (MT), uses the smallest thickness value from any region. MT was chosen for subcomponents that had counterbore, for baseline inspections, when wear was calculated using the point-to-point method, and when the MT value was over 0.040" less than the GW value.

Since the MT method uses the minimum reading from the entire UT inspection grid and the GW method uses the minimum reading from the region where wear is maximum, the T_{meas} value calculated by MT will be less than or equal to the value calculated by GW in all cases. Thus MT is the more conservative method. However, conservatism is not always the best option in the CHECWORKS model. Because the CHECWORKS model contains many components, using an overly conservative method to calculate the remaining life of one component may cause that component to be selected for inspection at the expense of another. Therefore, the method used was to model components as realistically as possible. See Section 4.1.1 for further discussion on conservatism in the CHECWORKS model.

For inspected components, the T_{meas} value listed in the "Wear Rate Analysis: Wear Predictions Report" in the Pass 2 Analysis, Appendix I, may not match the measured minimum thickness from the UT readings. In all cases, the T_{meas} values should not conflict by more than 0.040". Note that the "Wear Rate Analysis: Wear Predictions Report" in Appendix I lists the T_{meas} method, MT or GW, that was used.

5.4.7. Pass 2 Wear Rate Analyses (WRA) and Line Correction Factor (LCF)

Pass 2 Wear Rate Analysis was performed on the Wear Rate Analysis Runs as defined with one change: the Analysis Option, "Do Not Use Measured Wear" was deselected. As in Pass 1 WRA, Pass 2 WRA will generate for each component a predicted wear rate, and a predicted remaining service life. During Pass 2 WRA, CHECWORKS also generates a Line Correction Factor (LCF) for each WRA Run in the following way. For each inspected component in the run where the option "Do Not Use for LCF" is not chosen, CHECWORKS generates a ratio of the calculated wear to the predicted wear. The LCF for a run is defined as the median value of these ratios. CHECWORKS multiplies the Pass 1 wear predictions by the LCF to

generate the Pass 2 wear predictions.

The LCF indicates the degree to which CHECWORKS over or under-predicts wear. A reasonable LCF should be between 0.5 and 2.5 [7.3]. An LCF outside this range may be the result of inaccuracies in the model (e.g., incomplete chemistry history) or non-representative inspection data.

5.5. Network Flow Analysis

Network Flow Analysis (NFA) is a module within CHECWORKS that can be used to calculate pressure, flow rate, enthalpy, and quality at each component. If used, the results of the analysis are available for access by CHECWORKS during the Wear Rate Analysis to predict corrosion rates.

NFA should be used where a thermodynamic quantity of interest is unknown or unavailable. For example, if flashing across a control valve or orifice is considered possible; NFA can be used to calculate the steam quality at each component. This is necessary for accurate prediction of the FAC wear rate. For lines where thermodynamic conditions are known and the potential for flashing is small, NFA is not needed because the results would not increase the accuracy of the Wear Rate Analysis.

The Indian Point Unit 3 model does not contain any Network Flow Analysis run definitions.

5.6. Water Chemistry Analysis

Water Chemistry Analysis uses the Plant Global Data (Heat Balance Diagram, Power Level Data, Steam Cycle Data, Water Chemistry Data, and Plant Period Data) to determine the pH levels and constituent concentrations at various locations around the steam cycle. These values strongly affect FAC wear rates.

The Water Chemistry Analysis calculates the pH levels and constituent concentrations, for each line on the Heat Balance Diagram. The appropriate values are then used in the calculation of predicted wear rates for each component through the association of its database line to the HBD.

Water Chemistry Analysis can also be performed independently from Wear Rate Analysis. The resulting chemistry levels around the HBD are the same as they are when calculated as part of the Wear Rate Analysis. However, when the Water Chemistry Analysis is run alone, CHECWORKS also generates a report displaying the water chemistry results, as well as critical global data. A Water Chemistry Analysis was performed on every Water Treatment Period in order to review the results to ensure that they are reasonable; the reports are presented in Appendix G.

5.7. Wear Rate Analysis

Wear Rate Analysis (WRA) calculates a predicted wear rate for each component as well as the predicted time until the component wall thins to T_{crit}. WRA runs automatically takes into account all global input through use of Water Chemistry

Analysis results. Wear Rate Analysis Runs were defined to contain the CHECWORKS lines, and a separate WRA was performed upon each. Wear Rate Analysis Runs are defined by the following inputs:

5.7.1 Run Name and Title

Wear Rate Analysis Runs were given a Name and a Title as listed in Appendix B.

5.7.2 Ending Period

The ending period is used by CHECWORKS to calculate the current wear rates based on current conditions. The ending period selected was the current operating cycle, Cycle 15.

5.7.3 Lines to Analyze

Each run was composed of lines from the CHECWORKS model. Every line was included in a run. The runs and lines defined for this CHECWORKS model are presented in Appendix D.

5.7.4 Analysis Options

The CHECWORKS model allows the user to specify the source of component operating conditions. Component operating conditions can come from one of four locations: the CHECWORKS HBD, the Component form, an NFA, or the ARD. During wear rate analysis, CHECWORKS can use the operating conditions stored at the component level ("COMP"), determine the operating conditions based upon steam cycle data and Advanced Run Definition Flow Factors ("HBD"), use the operating conditions entered on the Advanced Run Definition form only ("ARD"), or to use the operating conditions calculated using an NFA ("NFA"). For all cases, the option "NFA->HBD->ARD->COMP" was selected. This directs CHECWORKS to preferentially use Network Flow Analysis first (if it exists for the line), followed by the ARD (for Z-type lines), the HBD (for all remaining lines), and finally the component.

The option "NFA->HBD->ARD->COMP" was selected for all lines since the model includes multiple power levels.

5.7.5 Duty Factor

The duty factor is used to specify the fraction of the total plant operating hours that a given line was in operation. For full-time lines, the duty factor is 1.0. For part-time lines, the duty factor is set to a value less than one based on operation. For example, if a line has full flow half of the time and zero flow half of the time, then the lines would be modeled with full flow and the duty factor would be set to 0.5. Use of the duty factor is in accordance with the recommendations of the EPRI Guidelines for Plant Modeling and Evaluation of Component Inspection Data [7.3].

Duty factors were taken from the input CHECWORKS model [7.21]. Duty factors for each line appear in Appendix D.

5.7.6. Advanced Run Definition

The Advanced Run Definition (ARD) function allows operating conditions to be entered at different times throughout plant history. Use of this function is necessary for plants operating with more than one power level (see Section 5.1.2). In addition, the ARD allows for entry of operating and chemistry conditions for lines not modeled on the heat balance diagram (COLA and Z-type lines), as well as part-time lines and parallel trains. The operating conditions listed below (flow factors, duty factors, pressure, temperature, enthalpy, quality, flow rate, and chemistry conditions) can change from cycle to cycle.

- **Flow Factor**: On the CHECWORKS SFA HBD level, flow rates are expressed in totals rather than for each train. For example, feedwater flow rate might be entered as 10 million pounds per hour, where each train of a three train system sees 3.33 million pounds per hour. As a result, flow multipliers had to be entered to the lines so that the actual flow rate is used to calculate wear rate at the component level. Thus for each flow segment a flow multiplier, or flow factor, was calculated. The flow factor is used to adjust the CHECWORKS SFA HBD calculated flow rate. The calculated flow factor for each flow segment was entered on the ARD form.

  There are some possible exceptions to the use of flow factors. The first is for lines and flow segments where NFA or the Component form would be used to calculate operating conditions and flow rate. For these the train flow is directly entered in the NFA definitions or the Component form. Therefore, for these lines the assigned flow factor is 1.0. Other exceptions are made for some lines and flow segments where the ARD form is used as the source of operating conditions. If the input source (PEPSE or HBD) already listed flow rate per train, then the flow factor is set to 1.0 and the train flow rate is entered.

  Flow factors were calculated by consulting the CHECWORKS SFA HBD, the plant heat balance diagrams [7.18], and the flow diagrams [7.22].

  If the ARD is not used, the flow factor is 1.0 by default.

- **Duty Factor**: The duty factor is used to specify the fraction of the total plant operating hours the lines in this run were in operation. For full-time lines, the duty factor is 1.0. For part-time lines, the duty factor is set to a value less than one based on operation. For example, if a line has full flow half of the time and zero flow half of the time, then the lines would be modeled with full flow and the duty factor would be set to 0.5. Use of the duty factor is in accordance with the

recommendations of the EPRI Guidelines for Plant Modeling and Evaluation of Component Inspection Data [7.3].

If the ARD is not used, the Global Duty factor is used.

- **Thermodynamic Data**: Thermodynamic data (operating pressure, enthalpy, temperature, and quality) were entered on the ARD form for Z-type lines (see Section 5.7.7) and COLA lines (see Section 5.7.8) only. These fields were left blank for all other cases. Only two out of four values are needed to define the thermodynamic conditions (pressure and enthalpy preferred) [0]. Data entered in these fields is used as a priority over the CHECWORKS SFA HBD.
- **Flow**: Flow rate was entered on the ARD form for Z-type lines (see Section 5.7.7) and COLA lines (see Section 5.7.8) only. These fields were left blank for all other cases. Data entered in this field is used as a priority over the CHECWORKS SFA HBD.
- **Chemistry Data**: Chemistry data (cold pH, oxygen concentration, and hydrazine concentration) was entered for Z-type lines only. These fields were left blank for all other cases. Data entered in this field is used as a priority over chemistry conditions calculated during Water Chemistry Analysis.

5.7.7 Z-Type Lines

Lines not associated to the CHECWORKS SFA heat balance diagram are called Z-type lines. Because they are not associated to the HBD, CHECWORKS SFA cannot automatically calculate chemistry and operating conditions for these lines. Therefore, when using the ARD function, the user must input not only flow factors and duty factors but also thermodynamic conditions, flow rate, and chemistry conditions for each operating cycle.

Z-type lines are used when the site has chemistry data for a specific line that is more accurate than the chemistry data calculated by CHECWORKS SFA.

5.7.8 Chemistry Only Line Association (COLA)

Chemistry Only Line Association (COLA) lines were created due to limitations in the CHECWORKS SFA HBD. In these cases, the computer model does not obtain the data from the correct location on the HBD, or the CHECWORKS SFA program did not allow the correct data to be entered.

COLA lines are associated to the CHECWORKS SFA HBD, like all other non Z-type lines in the model, but this association is to obtain chemistry data only. The values of pressure, temperature, enthalpy, quality, and flow rate were entered on the ARD form directly.

6. Results

6.1. Pass 1 Analysis Results

The results of the Pass 1 WRA are presented in Appendix H. For each WRA Run, the following reports are presented:

- Wear Rates/Input Data Report (sorted by wear rate)
- Wear Rates/Input Data Report (unsorted)
- Thickness/Service Time Report (sorted by remaining life)
- Thickness/Service Time Report (unsorted)

6.2. Pass 2 Analysis Results

A summary of the results of the Pass 2 WRA is presented in Appendix B. The Pass 2 reports appear in Appendix I. For each WRA Run, the following reports are presented:

- Wear Rates/Input Data Report (sorted by wear rate)
- Wear Rates/Input Data Report (unsorted)
- Thickness/Service Time Report (sorted by remaining life)
- Thickness/Service Time Report (unsorted)
- Wear Predictions Report (for runs with inspection data)
- Wear Plot "Comparison of Wear Predictions" (for runs with inspection data)

6.3. Discussion of Results

Certain criteria are used to determine if a run can be considered a properly calibrated Pass 2 analysis. These criteria consist of correlation between measured and predicted wear, the number of inspections, train coverage, the types of geometries inspected within the run, the number of outliers, and the Line Correction Factor. These criteria are used together to determine if the run is calibrated. One factor alone does not produce a calibrated run. However, one factor may require that the results be considered not calibrated.

- **Number of Inspection Locations:** EPRI recommends that at least three to five locations be included in a Pass 2 Analysis to provide reasonable confidence in the results [7.3 & 7.4]. In this context, a "location" is a CHECWORKS component and all of its component sections. Thus an inspection on an elbow and the downstream extension of the elbow would count as a single inspection location, even though two components were inspected. Note that this inspection location would be represented by two points on the Wear Plot, one per section.

The more inspections used in calculating the LCF, the more likely that the run can be considered properly calibrated. For runs in which less than three locations have been included in the calculation of the LCF, the results should be considered preliminary and used with caution because there is insufficient UT data to provide high confidence in the Pass 2 results. Therefore, for all runs identified below as requiring additional inspections, the lines in the run should not be considered properly calibrated Pass 2 models, and the results should be used as relative rankings only. In particular, Time to T_{crit} should not be used as an estimate of remaining life until properly calibrated Pass 2 analyses are complete.

- **Line Correction Factor (LCF) Value:** If perfect agreement between the CHECWORKS Pass 2 predictions and measured wall thickness existed, the analysis of each run would result in an LCF of 1. The range considered reasonable for LCFs is from 0.5 to 2.5 [7.3]. If the LCF is outside this range, additional attention should be paid to the results to understand why there is such a significant difference between predictions and measurements.

- **Wear Plot Correlation:** The plot scatter or the correlation between predicted and measured wear is generally the most important factor when determining calibration status. Good correlation will allow a run with a low number of inspection points and/or a poor LCF to be considered properly calibrated. Generally, a run with a poor LCF should not be considered a properly calibrated Pass 2 analysis. However, a high number of inspection points, a good correlation, and a low percentage of outliers may allow the run to be considered calibrated.

  Poor: *The inspection data exhibits significant scatter that does not adhere to the 45 ° line or a significant number of outliers are present.*

  Moderate: *The inspections points are within the ± 50% wear boundaries with few outliers, but the inspection points do not form tight clusters around the 45 ° LCF line.*

  Good: *The inspection points adhere well to the 45 ° LCF line. There are very few outliers present.*

- **Parallel Train Coverage:** EPRI's "Recommendations for an Effective Flow-Accelerated Corrosion Program" advises that inspections be performed on parallel trains [7.3]. As a consequence, there must be adequate train coverage to categorize a run as calibrated.

- **Inspections on Control Valves and Orifices:** NSAC-202L states that special consideration should be given to locations immediately downstream of orifices and control valves [7.4]. Thus for a line to be calibrated, an inspection must be performed immediately downstream of these locations.

- **Number of Outliers:** The number of outliers (points on the Wear Plot that fall outside the lines 50% above and below the central diagonal) is generally considered on a percentage basis in relation to the number of inspections. If a relatively large percentage of the inspections are outliers, then the CHECWORKS results should not be considered properly calibrated. In general, the number of outliers should not exceed 25%.

- **Geometry Coverage:** Finally, for a run to be considered calibrated, there should be a representative sample of the different geometries in the run. For example, a run that was calibrated with inspections on 90° elbows may correctly predict the wear for other elbows, but it may do a poor job of predicting the wear for a reducer.

The specific results obtained for each Wear Rate Analysis run are discussed in Appendix B. The results of the Pass 2 Analysis should be used to pick inspections for calibrated runs only. Runs not calibrated should use the results of the Pass 1 Analysis to pick inspections based on relative ranking.

7. References

7.1. "Erosion/Corrosion-Induced Pipe Wall Thinning", Generic Letter 89-08, U.S. Nuclear Regulatory Commission (NRC), May 2, 1989.

7.2. "CHECWORKS Steam/Feedwater Application Version 2.2 User Guide", EPRI Product #1013375, EPRI, Palo Alto, CA: 2004. (for information only)

7.3 "CHECWORKS Steam/Feedwater Application, Guidelines for Plant Modeling and Evaluation of Component Inspection Data", Doc. No. 1009599, Final Report, September 2004.

7.4. "Recommendations for an Effective Flow-Accelerated Corrosion Program", EPRI NSAC-202L-R3, TR 1011838, May 2006.

7.5. Flow Accelerated Corrosion Program CHECWORKS Analysis Enhancement", Technical Report No. 00130-TR-001, Volume 1 of 1, Revision 0, December 2000.

7.6. EPRI Advanced CHECWORKS Training Manual, April 1995.

7.7. EPRI Report TR-106611-R1, "Flow-Accelerated Corrosion In Power Plants", Revision 1, Plants, 1998

7.8. Case N-597 of ASME Boiler and Pressure Vessel Code, 3/2/1998.

7.9 New York Power Authority, Indian Point 3 Nuclear Power Plant, Non-Category I, Modification Procedure, MOD-86-03-082-MS, Rev. 0, dated 3/21/87.

7.10. NYPA Minor Modification Package (MMP) MMP-98-3-051, Rev. 0, Generic Pipe Replacement of Non Cat-1, Seismic Class III C.S. Pipe Susceptible to Erosion-Corrosion.

7.11. Nuclear Engineering, Minor Modification Package (MMP) Control Form, Titled No. 36 Extraction Steam Line Replacement, Revision 0, dated 10/22/96.

7.12. New York Power Authority, Piping Wall Thinning Evaluation for 18" EX Pipings, Calculation No. IP3-CALC-EX-03119, Rev. 0, dated 09/29/99.

7.13. New York Power Authority, Indian Point 3 Nuclear Power Plant, Nuclear Safety Evaluation, NSE 86-03-082-MS, Rev. 0, dated 3/24/87.

7.14. Containment Building, Boiler-Feed Piping Plan – Steam Generators No. 33 & 34, Drawing No. 9321-F-25503-7, Revision 7.

7.15. Specification for Material Supply and Fabrication of Piping Systems for Power Authority of the State of New York, Specification No.: 6604-104-248-4, 12/22/77.

7.16. Specification for Material Supply and Fabrication of Piping Systems for Power Authority of the State of New York, Specification No.: 6604-104-248-4, Addendum A, Rev. 2A, 4/9/85.

7.17. Metals & Alloys in the Unified Numbering System, SAE HS-1086 SEP96, 7th Edition.

7.18. Indian Point 3 Heat Balance Diagrams

7.18.1. Original HBD, 3045.3 MWt: New York Power Authority Indian Point 3 Nuclear Power Plant Heat Balance "F", 5/29/90.

7.18.2. Appendix K HBD, 3079.4 MWt: Indian Point 3 Nuclear Power Plant "Benchmark tuned to 3-19-03 Plant Data", Sheets 1-6, Run date 1/10/2005.

7.18.3. Stretch Power Uprate HBD, 3196 MWt: Indian Point 3 Nuclear Power Plant "Uprate 3168 Core Power w/ 0.5% Margin", Sheets 1-6, S&W Calc 59379-HU(S)-001 Rev. 0, Attachment 8.15.

7.19. Indian Point 3 CHECWORKS Models Calculations

7.19.1. "Indian Point Unit 3 CHECWORKS Power Uprate Analysis", CSI Calculation 040711-01, Revision 0, 3/23/2005.

7.19.2. "Indian Point Unit 3 CHECWORKS Global Input", CSI Calculation 94-10.1-05, Revision 3, 5/7/2004.

7.19.3. "Indian Point Unit 3 Condensate CHECWORKS Model", CSI Calculation IP3-RPT-COND-00912, Revision 4, 5/7/2004.

7.19.4. "Indian Point Unit 3 Extraction Steam CHECWORKS Model", CSI Calculation IP3-RPT-EX-0091 1, Revision 4, 5/7/2004.

7.19.5. "Indian Point Unit 3 Feedwater CHECWORKS Model", CSI Calculation IP3-RPT-FW-00984, Revision 4, 5/7/2004.

7.19.6. "Indian Point Unit 3 Heater Drains CHECWORKS Model", Report No. IP3-RPT-HD-00979, Revision 4, 5/6/2004.

7.19.7. "Indian Point Unit 3 Moisture Preseparator Drains CHECWORKS Model", CSI Calculation IP3-RPT-HD-00913, Revision 4, 5/7/2004.

7.19.8. "Indian Point Unit 3 Moisture Separator Drains CHECWORKS Model", Report No. IP3-RPT-MSD-00979, Revision 5, 5/6/2004.

7.19.9. "Indian Point Unit 3 Reheater Drains CHECWORKS Model", CSI Calculation IP3-RPT-HD-01144, Revision 4, 5/7/2004.

7.19.10 Indian Point Unit 3 Chemistry Readings and Plant Period Data for Cycle 14. Information provided by Harry Hartjen via FTP site.

7.20. Indian Point 3 CHECMATE Erosion/Corrosion Analyses

7.20.1. "CHECMATE Erosion/Corrosion Analysis of Condensate System", Utilizing CHECMATE, Report No.: IP3-RPT-FWS-00626, Rev. 0, 1/25/93.

7.20.2. CHECMATE Erosion/Corrosion Analysis of Extraction Steam System, Utilizing CHECMATE, Report No.: IP3-RPT-EX-0091 1, 10/22/93.

7.20.3. CHECMATE Erosion/Corrosion Analysis of Feedwater and Feedwater Recirculation Systems", Utilizing CHECMATE, Report No.: IP3-RPT-FW-00984, Rev. 0, 8/24/94.

7.20.4. CHECMATE Erosion/Corrosion Analysis of Heater Drains System, Utilizing CHECMATE, Report No.: Unknown.

7.20.5. CHECMATE Erosion/Corrosion Analysis of Moisture Separator Drain System, Utilizing CHECMATE, Report No.: IP3-RPT-MSD-01 158, Rev. 1, 3/24/97.

7.20.6. CHECMATE Erosion/Corrosion Analysis of Moisture Preseparator Drain System, Utilizing CHECMATE, Report No.: IP3-RPT-HD-00913, Rev. 0, 10/23/93.

7.20.7. CHECMATE Erosion/Corrosion Analysis of Reheater Drain System, Utilizing CHECMATE, Report No.: IP3-RPT-HD-01 144, Rev. 0, 8/22/94.

7.21. Indian Point 3 CHECWORKS FAC model, the (as-transmitted) SPU update project model, the transmittal date of the model was March 23, 2005, Document No. 0507 14c02.

7.22. Indian Point 3 Erosion Corrosion Inspection Flow Diagrams

Condensate & Boiler Feed Pump Suction, Dwg No. EC-F-20 183 Sh. 1, Rev. 1
Condensate & Boiler Feed Pump Suction, Dwg No. EC-F-20 183 Sh. 2, Rev. 2
Boiler Feedwater, Dwg No. EC-F-20193, Rev. 2
Extraction Steam, Dwg No. EC-F-20203 Sh. 1, Rev. 1
Extraction Steam, Dwg No. EC-F-20203 Sh. 2, Rev. 1
Heater Drains & Vents, Dwg No. EC-F-20223 Sh. 1, Rev. 1
Heater Drains & Vents, Dwg No. EC-F-20223 Sh. 2, Rev. 1
Moisture Separator and Reheater Drains & Vents, Dwg No. EC-F-20233 Sh. 1, Rev. 1
Moisture Separator and Reheater Drains & Vents, Dwg No. EC-F-20233 Sh. 2, Rev. 1

7.23. Indian Point 3 FAC Isometrics and Plan/Section Drawings

Dwg No. EC-H-5000, Rev. 3	Dwg No. EC-H-50038, Rev. 2
Dwg No. EC-H-5001, Rev. 4	Dwg No. EC-H-50039, Rev. 3
Dwg No. EC-H-5002, Rev. 1	Dwg No. EC-H-50040, Rev. 3
Dwg No. EC-H-5004, Rev. 2	Dwg No. EC-H-50041, Rev. 3
Dwg No. EC-H-5005, Rev. 2	Dwg No. EC-H-50042, Rev. 2
Dwg No. EC-H-5006, Rev. 1	Dwg No. EC-H-50045, Rev. 1
Dwg No. EC-H-5007, Rev. 2	Dwg No. EC-H-50046, Rev. 2
Dwg No. EC-H-5008, Rev. 2	Dwg No. EC-H-50047, Rev. 2
Dwg No. EC-H-50061, Rev. 1	Dwg No. EC-H-50048, Rev. 2
Dwg No. EC-H-50062, Rev. 1	Dwg No. EC-H-50060, Rev. 1
Dwg No. EC-H-50064, Rev. 1	Dwg No. EC-H-50072, Rev. 1
Dwg No. EC-H-50071, Rev. 2	Dwg No. EC-H-50074, Rev. 1
Dwg No. EC-H-50081, Rev. 2	Dwg No. EC-H-50075, Rev. 1
Dwg No. EC-H-50082, Rev. 3	Dwg No. EC-H-50076, Rev. 1
Dwg No. EC-H-50082, Rev. 3	Dwg No. EC-H-50077, Rev. 1
Dwg No. EC-H-50009, Rev. 1	Dwg No. EC-F-50078, Rev. 1
Dwg No. EC-H-50010, Rev. 2	Dwg No. EC-H-50079, Rev. 2
Dwg No. EC-H-50011, Rev. 1	Dwg No. EC-H-50080, Rev. 2
Dwg No. EC-H-50012, Rev. 2	Dwg No. EC-H-50084, Rev. 3
Dwg No. EC-H-50014, Rev. 1	Dwg No. EC-H-50085, Rev. 1
Dwg No. EC-H-50015, Rev. 2	Dwg No. EC-H-50086, Rev. 1
Dwg No. EC-H-50016, Rev. 2	Dwg No. EC-H-50087, Rev. 1

Dwg No. EC-H-50017, Rev. 2	Dwg No. EC-H-50088, Rev. 1
Dwg No. EC-H-50018, Rev. 2	Dwg No. A-201862
Dwg No. EC-H-50020, Rev. 2	Dwg No. A-201881
Dwg No. EC-H-50021, Rev. 2	Dwg No. A-202112
Dwg No. EC-H-50022, Rev. 2	Dwg No. A-2021 10
Dwg No. EC-H-50029, Rev. 1	Dwg No. A-2021 13
Dwg No. EC-H-50030, Rev. 1	Dwg No. A-2021 11
Dwg No. EC-H-50031, Rev. 2	Dwg No. A-201869
Dwg No. EC-H-50035, Rev. 2	

7.24. MSD Piping Replacement Isometric Drawings:

7.24.1. Turbine Building & Heater Bay Replace Piping From MSD Tanks 31A&B, 32A&B, and 33A&B Spool Piece Location Isometric From MSD Tank 31A, 32A, & 33A to Heater Drain Tank, NYPA Drawing No. SK-98-3-051-001, Rev. 0.

7.24.2. Turbine Building & Heater Bay Replace Piping From MSD Tanks 31A&B, 32A&B, and 33A&B Spool Piece Location Isometric From MSD Tank 31B, 32B, & 33B to Heater Drain Tank, NYPA Drawing No. SK-98-3-051-002, Rev. 0.

7.25. Ultrasonic Examination Reports

7.25.1. 3RO9 UT Exam Reports, hardcopy reports.

7.25.2. 3RO10 UT Exam Reports, hardcopy reports.

7.25.3. 3RO11 UT Exam Reports, hardcopy reports.

7.25.4. 3RO12 UT Exam Reports, hardcopy reports.

7.25.5. 3RO13 UT Exam Reports, hardcopy reports.

7.26. Ultrasonic Examination Grid Files

7.26.1. 3RO9 UT Exam Electronic Grid Files, electronic text files.

7.26.2. 3RO10 UT Exam Electronic Grid Files, electronic text files.

7.26.3. 3RO11 UT Exam Electronic Grid Files, electronic text files.

7.26.4. 3RO12 UT Exam Electronic Grid Files, electronic text files.

7.26.5. 3RO13 UT Exam Electronic Grid Files, electronic text files.

7.27. Referenced Correspondence and Communications (see Attachment A)

7.27.1. E-mail regarding Moisture Separator Drain Piping Replacement Modification, MMP 98-3-05 1, from James Sherman (NYPA) to Jeffrey Chow dated February 21, 2000, CSI E-mail 94-10.1-79.

7.27.2. Email from Harry Hartjen (IP3) to Daniel R. Poe (CSI Technologies), dated 10/12/2004, regarding SPU implementation dates, CSI Doc. No. 04071111.

7.27.3. Email from Harry Hartjen (IP3) to Daniel R. Poe (CSI Technologies), dated 10/18/2004, regarding operational and configuration changes due to SPU, CSI Doc. No. 04071113.

7.27.4. Email from Ron Macina (IP3) to Brian Trudeau (CSI Technologies), dated 1/10/2005, regarding addition al Heat Balance Diagrams and uprate start dates, CSI Doc. No 04071140

7.27.5. Email from Harry Hartjen (IP3) to Greg R. Lupia (CSI Technologies), dated 8/2/2005, regarding operating hours for Cycle 13 and MOPS/SCRUPS piping replacement, CSI Doc. No. 0507 14c07

7.27.6. Email from Harry Hartjen (IP3) to Greg R. Lupia (CSI Technologies), dated 8/9/2005, regarding replacement operations during Cycle 13, CSI Doc. No. 0507 14c03

7.27.7. Letter from Harry Hartjen (IP3) to Dan Poe (CSI Technologies), dated 7/26/2005, regarding input data for the 3R13 outage, CSI Doc. No. 0507 14c00.

7.27.8. Email from Harry Hartjen (IP3) to Dan Poe (CSI Technologies), dated 10/18/2005, regarding Comments on Revision A of the IP3 R13 Pass 2 Calculation, CSI Doc. No. 050714c11.

7.27.9 Email from Harry Hartjen (IP3) to Al Sipkovsky (CSI Technologies), dated 9/14/2007, regarding questions about recent replacements, CSI Doc. No. 0705.100-03.

7.27.10 Email from Harry Hartjen (IP3) to Al Sipkovsky (CSI Technologies), dated 9/14/2007, regarding questions about recent replacements, CSI Doc. No. 0705.100-04.

7.28. FAC Manager database transmitted by Harry Hartjen (IP3) to CSI Technologies, dated 9/7/2007.

Attachment A
Referenced Correspondence and Communication

Reference 7.27.1

Email from James Sherman (IP3) to Jeff Chow (CSI Technologies), dated 2/21/2000, regarding Moisture Separator Drain Piping Replacement Modification, CSI Doc. No. 04071111.

From: Sherman, James [James.Sherman@nypa.gov]
Sent: Monday, February 21, 2000 6:55 AM
To: Jeffrey Chow
Subject: FW: Moisture Separator Drain Piping Replacement Modification, MMP 98-3-05 1

JEFF:

RESENDING THE FOLLOWING MESSAGE.

JIM SHERMAN

> ----- Original Message ----
> From: Sherman, James
> Sent: Friday, February 18, 2000 2:49 PM
> To: 'jchow @ www.csitechnologies.com'
> Cc: Penny, Robert; Smith, Glenroy; Spataro, William
> Subject: Moisture Separator Drain Piping Replacement Modification,
> MMP 98-3-05 1
>
> Jeff,
>
> In response to your question on the ASTM designation for the replacement
> materials, the following can be used.
>
> Pipe (6" & 8") A-335 Gr P-11
>
> Fittings (6" & 8" Butt Welded Ends) A-182 F-11
>
> Forgings A-234 WP- 11
>
> As I said, the forgings are for welded attachments to pipe or fittings.
> None of these attachment should be in the CHEC WORKS model.
>
> Any questions please contact me.
>
> Jim Sherman

Reference 7.27.2

Email from Harry Hartjen (IP3) to Daniel R. Poe (CSI Technologies), dated 10/12/2004, regarding SPU implementation dates, CSI Doc. No. 04071111.

Dan:

Following are input to the DDIR:

No. 8A SPU operations are expected to be implemented on 11/22/2004 at IP2.

No. 9A SPU operations are expected to be implemented on 04/08/2005 at IP3.

Harry Hartjen

(914) 736-8356

Reference 7.27.3

Email from Harry Hartjen (IP3) to Daniel R. Poe (CSI Technologies), dated 10/18/2004, regarding operational and configuration changes due to SPU, CSI Doc. No. 04071113.

Dan:

Attached is the response from our engineer, the Shaw Group to your request for a listing of all operational and/or configuration changes due to the SPU.
Note that there are no operational and/or configuration changes to IP2/IP3 due to the SPU.
This information was required for DDIR No. 6 and 7.

Per your request, a hard copy set of IP3 FAC isometric drawings will be mailed today to your attention. Note that drawing EC-H-50077 is not yet revised in this mailing. For correct piping configuration, see the information I sent you for the 3R1 2 Checworks update.

Included in this mailing is:

1. Flow Accelerated Corrosion Program Checworks Analysis Enhancement, Technical Report No. 001 30-TR-001 Revision 0 Volume 1 of 1. December, 2000. This report serves as the Unit 2 Checworks Model documentation. In addition to the Checworks Wear Rate Analysis Run Definitions listed in Table 1.0, there are the following two additions:
    a. X-under w/exp joints
    b. CND FWH 22 to FWH 23; this was added due to the SPU.

This information was required for DDIR No. 4

Harry Hartjen

From: Cunningham, Glenn [mailto:glenn.cunningham@shawgrp.com]
Sent: Thursday, October 07, 2004 2:45 PM
To: Hartjen, Harry
Cc: Scanlon, Michael; Chakrabarti, Syamal
Subject: RE: RAI FAC-1

Harry,

There are no operational changes for Steam Plant Systems, such as use of additional trains or use of bypass lines not currently in operation, associated with uprate of IP2 / IP3. Changes due to the uprate which affect FAC are primarily changes in system flowrates and temperatures, which are documented in the Heat Balance calculations. Impact of these changes on piping velocities and temperatures is addressed in the

applicable sections of the BOP Uprate Engineering Reports, forwarded to Entergy for review.

Modifications associated with the uprate of IP2 / IP3 include: (1) MSR internal moisture separation system replacement, (2) HP Turbine rotor replacement, (3) HP turbine interstage drain piping modification, and (4) Relocation of HP turbine 1st stage pressure taps.

Regards, Glenn C.

From: Hartjen, Harry [mailto:HHartje@entergy.com]
Sent: Wednesday, October 06, 2004 1:30 PM
To: Cunningham, Glenn Subject: RE: RAI FAC-1

Glen:
This is to confirm that the wear rate comparison will be completed by 12/31/2004.

As I mentioned to you we are having a contractor perform the update to our Checworks models. One of the inputs I have to provide to them is:
The listing of all Unit 2 and Unit 3 operational and/or configuration changes due to the power uprate (i.e., additional trains in operation, bypass lines operated at full power, etc.)

Do you have this information or can you direct my question to someone who has this information.

Thanks,

Harry Hartjen
(914) 736-8356

Reference 7.27.4

Email from Ron Macina (IP3) to Brian Trudeau (CSI Technologies), dated 1/10/2005, regarding addition al Heat Balance Diagrams and uprate start dates, CSI Doc. No 04071140.

CSI Doc. No. 04071140
Brian,

Please find below the requested Heat Balances/Information.
1) IP3 Pre and Post Appendix K Heat Balances
<<IP3TuningR4 Pre Appendix K (3037 NSS Pwr).pdf>> <<IP3TuningR4 Post Apendix K.pdf>>
2) IP2 Pre Appendix K Heat Balance
<<IP2-TuningR4 Pre Appendix K (3090 NSS Pwr).pdf>>
3) Start Date for IP3 Appendix K uprate was 12/22/02
4) Start Date for IP2 Appendix K uprate was 5/23/03

Thanks,
Ron Macina
914-736-8363

------Original Message----
From: Brian Trudeau [mailto :btrudeau@csitechnologies.com]
Sent: Tuesday, December 28, 2004 3:52 PM
To: Macina, Ron
Subject: Request for Additional HBDs

CSI Doc. No. 04071137

Ron,

Based on our discussion earlier today, it appears that we have some additional work to do on this end. We plan on modeling all three power levels (100% - the Original power level, ~1 01.4% - the Appendix K power level, and 105% - the SPU power level) for each unit. In doing this, we will capture plant conditions at each point in history.

To complete this task, we will need the following input:

(1) Unit 3 PEPSE or HBD at ~1 01.4% power (the Appendix K power uprate)
(2) Unit 2 Original PEPSE or HBD at 100% power (pre-Appendix K)
(3) Unit 3 Start date for the Appendix K Uprate
(4) Unit 2 Start date for the Appendix K Uprate

Please let me know if you have any questions. We will be contacting Harry to inform him of this plan.

Thank you,

Brian Trudeau
CSI Technologies, Inc.
(847) 836-3000 ext. 717
www.csitechnologies.com

Reference 7.27.5

Email from Harry Hartjen (IP3) to Greg M. Lupia (CSI Technologies), dated 8/2/2005, regarding operating hours for Cycle 13 and MOPS/SCRUPS piping replacement, CSI Doc. No. 050714c 02

Greg:

EX-02. 1 3-06R and EX-02.7-02T were replaced with chrome moly. P22.

Harry

---- Original Message----
From: Gregory. M Lupia [mailto:glupia@csitechnologies.com]
Sent: Monday, August 08, 2005 4:50 PM
To: Hartjen, Harry
Subject: RE: Component Replacement Question

Harry,

Do these two components EX-02.1 3-06R and EX-02.7-02T, replaced in RO8, 01/01/1994 also follow the stainless clad pipe spec used during R13?

---- Original Message----
From: Hartjen, Harry [mailto:H Hartje@entergy.com]
Sent: Monday, August 08, 2005 1:58 PM
To: Gregory. M Lupia
Subject: RE: Component Replacement Question

Greg:

Attached is spreadsheet marked up in red. The copmonents were rearranged in flow direction order, and additional as-built components are designated as New. This pipe replacement replaced all the carbon steel pipe with clad pipe upstream of reducer EX-02.13-06R and upstream of the branch of tee EX-02.7-02T.

In answer to your specific questions, EX-02.9-10P was replaced. EX-02.9-7P no longer exists. EX-02.1 3-03P is a pipe and was replaced. EX-02. 1 3-06R is a reducer and it was replaced along with EX-02.7-02T, RO8, 01/01/1994.

If you need anything else, let me know.

Harry Hartjen

---- Original Message----
From: Gregory. M Lupia [mailto:glupia@csitechnologies.com]
Sent: Thursday, August 04, 2005 12:21 PM
To: Hartjen, Harry
Subject: Component Replacement Question

Harry,

Attached is your spreadsheet with the modeled replacement components, to which I have added additional components highlighted in yellow. The yellow components are in a line where the remainder of the components have been replaced, and I suspect these components have been as well. In some cases the yellow components could be extensions of the US components. Could you verify this for me. Call me with questions.

<<Replaced Modeled Components 3R1 3.xls>>

Gregory M. Lupia
CSI Technologies, Inc
(847) 836-3000 ext 728
www.csitechnologies.com
glupia@csitechnologies.com

Reference 7.27.6

Email from Harry Hartjen (IP3) to Greg M. Lupia (CSI Technologies), dated 8/2/2005, regarding operating hours for Cycle 13 and MOPS/SCRUPS piping replacement, CSI Doc. No. 050714c 03

Greg:

The stainless steel clad carbon piping used for the MOPS/SCRUPS piping replacement is as follows:

10" NPS	A-106 Gr. B	STD / Sch. 40 0.365"	
14" NPS	A-106 Gr. B	STD / Sch. 30 0.375"	
18" NPS	A-106 Gr. B	XS / N/A	0.500"

FYI I have also attached a sheet from the modification explaining the change.

Harry

---- Original Message----
From: Gregory. M Lupia [mailto:glupia@csitechnologies.com]
Sent: Tuesday, August 02, 2005 1:39 PM
To: Hartjen, Harry
Subject: RE: Operating hrs for Cycle 13

Thanks Harry

---- Original Message----
From: Hartjen, Harry [mailto:H Hartje@entergy.com]
Sent: Tuesday, August 02, 2005 12:16 PM To:
Gregory. M Lupia
Subject: RE: Operating hrs for Cycle 13

Gregory:

Operating hours for Unit 3 Cycle 13 was 16267.99 hours.

Harry G. Hartjen

---- Original Message----
From: Gregory. M Lupia [mailto:glupia@csitechnologies.com]
Sent: Monday, August 01, 2005 12:49 PM
To: Hartjen, Harry
Subject: Operating hrs for Cycle 13

Harry,

I'm working on IP3, CHECWORKS Model for cycle 13, I'll need to have the operating hours for IP3, operating cycle 13 for input to the model. Thanks.

Gregory M. Lupia
CSI Technologies, Inc
(847) 836-3000 ext 728
www.csitechnologies.com
glupia@csitechnologies.com

Reference 7.27.8

Email from Harry Hartjen (IP3) to Dan R. Poe (CSI Technologies), dated 8/2/2005, regarding Comments on Revision A of the IP3 R13 Pass 2 Calculation, CSI Doc. No. 050714c11

Dan:

I have reviewed the CHECWORKS Pass 2 Analysis for the Indian Point 3, 3R13 refuel outage and have the following three comments:

1. The following two extraction steam nozzles were not listed in Appendix F, UT Inspection Data: EX-05.1 B-01 N (05UT095) and EX-05.2B-01 N (05UT105). These two components have inspection data and should also be included in the model.

2. Components inspected in UT exam RHD-01 .10B-26F (05UT074) were not listed in Appendix F, UT Inspection Data. There is inspection data for two components RHD-01.10B-27P and RHD-01.10B-26E and should also be included in the model.

3. There is a warning for the Pass 2 analysis of component CD-02.8A-03P (Page I-12) indicating a conflict exists in LCF/Measured Wear option selected. This should be resolved in the model or explained in Appendix B.

After resolution of these comments, please issue for use. If you have any questions, just give me a call at 914-271-7239.

As always, CSI has produced a first-rate, high-quality CHECWORKS Pass 2 update for IPEC. Please extend my appreciation for a job well done to your staff.

Harry G. Hartjen
FAC Program Engineer
Indian Point Energy Center

Reference 7.27.9

Email from Harry Hartjen (IP3) to Al Sipkovsky (CSI Technologies), dated 9/14/2007, regarding questions about recent replacements, CSI Doc. No. 0705.100-03

Al:

See responses to your questions below.

I need to look up the info on the second bullet.

I am on an unstable dial-up so I will send you a partial response now and a followup in a few minutes, in case I loose the connection.

Harry

-----Original Message-----
From: Al Sipkovsky [mailto:asipkovsky@csitechnologies.com]
Sent: Thursday, September 13, 2007 11:18 AM
To: Hartjen, Harry G
Subject: IPEC3 Replacement Lists

Harry,

I am currently working on updating your SFA model with the latest plant period, chemistry, replacement, and inspection info. I just need a little clarification on what exactly you want us to do with some of the information that you provided on the FTP site.

- The EXCEL file called REPLACED COMPONENTS.xls contains the components that were replaced in this last outage (RO14). The second component in this list is RHD-02.14B-12T-DS. Does this mean that the pipe on the downstream main of this tee has been replaced? If this is true, the pipe on the downstream main of this tee is not a component that was modeled in SFA. The same is true for component RHD-02.15A-11T-DS. Or did you mean the tee itself?
  Each of these components is a pup piece downstream of the tee, and upstream of the feedwater heater nozzle. Please add these components to the model.
- Component RHD-02.6A-06L in the same spreadsheet is said to have the geometry of a pipe. I just wanted to make sure that the tee was the replaced component and not the downstream pipe. So, which component is the replaced component?
- The component FAC-07-VCD-09 is an SNM component right? I just want to verify that it is not in the official CHECWORKS model.
  Yes this is a SNM component.
- In the other EXCEL spreadsheet called Replaced Modeled Components 3R13 REV1.xls there are components that have their replacements documented in SFA. Tell me if this is right: you just want me to rearrange the components in SFA to how they are listed in that spreadsheet and also to do what the instructions say in the far right column of the sheet? The three isometrics you provided also visually show how the components should be ordered as well, right?
  Yes. The spreadsheet shows the correct component order.

I just want to make sure I'm doing what you are asking us to do. I think I understand, but I just want to hear from you first.

If you have any comments or issues about my questions, please email or call me back at the

number below.

Thanks,

Al Sipkovsky
CSI Technologies, Inc.
847-836-3000 ext. 787

Reference 7.27.10

Email from Harry Hartjen (IP3) to Al Sipkovsky (CSI Technologies), dated 9/14/2007, regarding questions about recent replacements, CSI Doc. No. 0705.100-04

Al:

This second installment should answer the remaining questions.
Please send me back a short email that you received this and of course, let me know if you have any more questions

Harry

-----Original Message-----
From: Al Sipkovsky [mailto:asipkovsky@csitechnologies.com]
Sent: Thursday, September 13, 2007 11:18 AM
To: Hartjen, Harry G
Subject: IPEC3 Replacement Lists

Harry,

I am currently working on updating your SFA model with the latest plant period, chemistry, replacement, and inspection info. I just need a little clarification on what exactly you want us to do with some of the information that you provided on the FTP site.

- The EXCEL file called REPLACED COMPONENTS.xls contains the components that were replaced in this last outage (RO14). The second component in this list is RHD-02.14B-12T-DS. Does this mean that the pipe on the downstream main of this tee has been replaced? If this is true, the pipe on the downstream main of this tee is not a component that was modeled in SFA. The same is true for component RHD-02.15A-11T-DS. Or did you mean the tee itself?
- Component RHD-02.6A-06L in the same spreadsheet is said to have the geometry of a pipe. I just wanted to make sure that the tee was the replaced component and not the downstream pipe. So, which component is the replaced component?
  You are correct. The pipe immediately downstream of RHD-02.6A-06L was replaced, not RHD-02.6A-06L
- The component FAC-07-VCD-09 is an SNM component right? I just want to verify that it is not in the official CHECWORKS model.
- In the other EXCEL spreadsheet called Replaced Modeled Components 3R13 REV1.xls there are components that have their replacements documented in SFA. Tell me if this is right: you just want me to rearrange the components in SFA to how they are listed in that spreadsheet and also to do what the instructions say in the far right column of the sheet?
  The three isometrics you provided also visually show how the components should be ordered as well, right?
  Right. The spreadsheet and iso's show the correct component order. I wanted to make sure you had the correct field configuration to model this area correctly. How the components broken up and are assigned lines, I will leave to your expertise. There were other questions I had reviewing this area in a spreadsheet Presep Component comments.xls. This should be on the ftp site. I will attach a copy here. Mainly deals with components I could not find in the SFA model.

I just want to make sure I'm doing what you are asking us to do. I think I understand, but I just

want to hear from you first.

If you have any comments or issues about my questions, please email or call me back at the number below.

Thanks,

Al Sipkovsky
CSI Technologies, Inc.
847-836-3000 ext. 787

Appendix A

CHECWORKS Model Change History

Table of Contents

Prior to 3RO14: Page
Global A-2
Condensate A-2
Extraction Steam A-3
Feedwater A-8
Heater Drains A-10
Moisture Preseparator Drains A-10
Moisture Separator Drains A-12
Reheater Drains ..... A- 13

Update for 3RO14 ..... A-14

1. Global

1.1 The steam lines between the preseparators and the separators were represented on the CHECWORKS Heat Balance Diagram (HBD) as a dummy high-pressure extraction line, as recommended in [7.3]. The enthalpy for this HBD line was assumed to be the same as the line from the preseparator, as shown on the heat balance diagrams [7.18].

1.2 For MSEP 1 on the HBD, the steam cycle enthalpy was entered as the combination of the preseparator and the separator drains to the drain tank. The steam cycle pressure was taken from the previously verified CHECMATE model, and translated to psia from psig.

1.3 For RHTR 1 on the HBD, the steam cycle pressure was taken from the previously verified CHECMATE model, and translated to psia from psig.

1.4 The blowdown rate for the steam generator operated at 0.1000 Mlb/hr for the majority of plant life. However, after refueling outage 9 the rate was cut to 0.0750 Mlb/hr.

1.5 The blowdown pressure was assumed to be equal to the pressure at the outlet of the steam generator. The blowdown enthalpy was assumed to be the enthalpy of saturated water at this pressure.

1.6 The Steam Generator Moisture Carryover Percentage was left at the default value of 0.25%.

1.7 The Blowdown Tank venting rate was entered as 0% [7.18.1].

1.8 The Heater Drain Tank venting rate was also entered as 0%. This does not necessarily represent actual operating conditions but is used to obtain reasonable oxygen concentration values.

2. Condensate

2.1 For component CD-06.2-01R, the design pressure was reduced to 625 psig. This was done to reduce the value of Tcrit so that it is less than the value for Tnom. This is acceptable since the operating pressure is 156.4 psig.

2.2 The sketch for components CD-02.8B-03P, CD-02.6-03T, and CD-02.8B-02E for the 1997 outage is unclear. It was assumed that these components were inspected in a manner similar to components CD-02.7-02T, CD-02.8A-03P, and CD-02.8A-02E for the 1997 outage, which is of a similar configuration.

2.3 CD-02.5-04T has downstream pipe inspected for the 1992 refueling outage.

However, CD-02.6-01T is a fabricated tee immediately downstream of CD-02.5-04T. Therefore, the first 5 rows of data from file CD254TDP.dat were imported to the main of CD-02.6-01T, and the remaining three rows were imported as its downstream extension. A 180 degree offset was used for the downstream tee since both tees were inspected using the same grid even though their branches are 180 degrees opposed.

2.4 The initial thickness of 0.845 inches imported from CHECMATE for CD-5.1C-10T was significantly greater than the nominal thickness of 0.688 inches. This would have resulted in CHECWORKS over-predicting the wear since CHECWORKS calculates wear based upon initial thickness versus measured thickness. Therefore, this value was removed from the model.

2.5 Point (J,2) was deleted from the refueling outage 9 inspection of CD-02.12-05P (report 97UT101), imported as the D/S extension of CD-02.12-04V, since this point was obviously inaccurate.

2.6 CHECWORKS point (L,4), which corresponds to point (L,9) in report 97UT044, was removed from the branch of CD-02.6-03T for refueling outage 9 since the reading was unrealistically high.

2.7 CD-02.5-04T's branch was not used in the calculation of the LCF since the measurements are not due to actual wear for both refueling outage 8 and 9.

2.8 Point (F,4) was removed from the refueling outage 9 inspection of CD-02.1A-13R (report 97UT053) due to an unrealistically high reading.

2.9 The initial thicknesses of 0.678 and 0.67 1 inches, respectively, imported from CHECMATE for CD-02.8B-02E and CD-02.8C-02E were significantly greater than the nominal thickness of 0.438 inches. This would have resulted in CHECWORKS over-predicting the wear since CHECWORKS calculates wear based upon initial thickness versus measured thickness. Therefore, this value was removed from the model.

2.10 Point (F,1) was deleted from the Cycle 10B inspection of CD-02.1C-12T (report 99UT074), imported as the U/S Main, since this point was determined to be inaccurate by engineering judgment.

3. Extraction Steam

3.1 The orientation angle of component EX-04.1-07P was changed to 180 degrees.

3.2 Expansion joints were modeled as orifices with the component number that was next in the series. An orifice diameter equal to 90% of the inside diameter of the pipe was used. Specifically, the components added were as follows:

EX-03.1A-42X	EX-03.1B-37X	EX-03.1C-41X
EX-04.1-08X	EX-04.8-08X	EX-04. 15-08X
EX-04.2- 10X	EX-04.9-10X	EX-04. 16-10X

3.3 The following components were changed to geometry code 3, 45 degree elbow, and, where applicable, their downstream pipe was changed to geometry code 53:

EX-05. 1A-03E	EX-05. 1B-03E	EX-05.1C-03E
EX-05.2A-03E	EX-05.2B-03E	EX-05.2C-03E
EX-06.4A-02E	EX-06.4B-02E	EX-06.4C-02E

3.4 The following components were changed to geometry code 1, 45 degree elbow:

EX-05.2A-05E	EX-05 .2B-05E	EX-05 .2C-05E

3.5 The following components were changed to long radius elbows:

EX-04.2-07E	EX-04.9-07E	EX-04. 16-07E

3.6 The orientation angle of component EX-01.3-21E was changed to 90 degrees.

3.7 Components EX-02.13-04E, EX-03.1A-20E, and EX-03.1A-24E were assumed to be short radius elbows based on overall line configuration.

3.8 Components EX-02.13-04E, EX-03.1A-20E, and EX-03.1A-24E were assumed to be short radius elbows based on overall line configuration.

3.9 An orientation angle of 90 degrees was added for component EX-01.3-21E

3.10 Components EX-01.5A-03E and EX-01.5A-09E were changed to geometry code 102, 90 degree elbow with counterbore.

3.11 Lines ES: PRESEP 1A TO HDR 35, ES: PRESEP 2A TO HDR 35, ES: PRESEP 1B TO HDR 35, and ES: PRESEP 2B TO HDR 35 were newly installed during refueling outage 5, RO5 [7.24.1] & [7.24.2]. Therefore, the installation date for the components within these lines was set to the start date of RO5, 05/02/87.

3.12 During Refueling Outage 9, all piping between the High Pressure Turbine and the 6 Heaters was replaced with the exception of the turbine exit nozzles, the feedwater heaters inlet nozzles, and all the valves [7.11]. The replacement date used was the first day of Refueling Outage 9 or 5/14/97. The feedwater heaters inlet nozzles were internally weld overlayed with stainless steel material. In order to accurately model the existing weld overlay within CHECWORKS, the feedwater inlet nozzles were

also replaced. The valves and turbine exit nozzles were left as is.

3.13 Components EX-02.16-08E, EX-02.17-05E, and EX-02.18-05E were replaced with carbon steel in 1985. Therefore, the material and WRA Option for these components were changed to A234/WPB and "Use Measured Wear for LCF", respectively.

3.14 Type 12 tees with no flow in the upstream or downstream main were changed to a geometry code of 10 or 13 or 14, respectively. The downstream pipe was changed from a geometry code of 62 to 60 or 63 or 64 as well. The table below lists the component, current geometry code, applicable downstream pipe, and current geometry code for downstream pipe.

Tee Component Name	Current Geometry Code	D/S Pipe Component Name	Current Geometry Code
EX-02.1-06T	10	EX-02.5-01P	60
EX-02.8-08T	10	N/A	N/A
EX-04.1-06T	10	EX-04.3-01P	60
EX-04.8-06T	10	EX-04.10-01P	60
EX-04.15-06T	10	EX-04.17-01P	60

3.15 Components EX-02.4-01T and EX-02.11-01T were removed from the model since the main run of these tees are on non-modeled lines.

3.16 Component EX-01.3-18P was deleted from the model since the 1992 inspection of adjacent components revealed that no pipe actually exists.

3.17 The original material of components EX-01.3-23T and EX-01.4-02T was A234 Grade WPB. This material was changed to A106 Grade B since tees were assumed fabricated.

3.18 Piping specifications were unavailable for LP extraction lines to Heaters 31 and 32. These lines were assumed to have the same design pressure and temperature as well as piping schedule and material as the lines to the 33 Heaters.

3.19 New material A691 EFW Grade 2 ¼ CR Class 22 was added as having 2.25% chrome and 0.70% molybdenum with an allowable stress of 15,000. This material, A691/EFW/22, was used for replaced piping to the 35 Heaters.

3.20 All components that were replaced during Refueling Outage 9 from the HP Turbine to the 6 Heaters have a current material of A-213/TP304L/TP3. This material is comparable in composition to the actual material installed. Since the current material is non-susceptible to FAC, all replaced components were selected as "Do Not Use Any Measured Wear".

3.21 The following components were replaced with chrome-moly during RO11. The replacement date for these components was assumed to be 04/28/01.

EX-02.16-02P	EX-02.16-06E	EX-02.17-03E
EX-02.16-03E	EX-02.16-07P	EX-02.17-04P
EX-02.16-04P		

3.22 Components EX-01.1-03P and EX-01.2-10L had two inspections during RO8. The later of the two was imported.

3.23 Component EX-02.3-03T is not in the model, therefore its RO8 inspection data could not be imported.

3.24 In some cases, inspection data files did not match the hard copies. This data was not imported. Affected components were EX-04.6-05E and, EX-02.14-32T for RO9.

3.25 Data file EX042102.DAT was not imported for RO9 because it is an expanded view of the EX-04.21-04P that is already associated with inspection file EX042 1 00.DAT.

3.26 The following data points were removed from RO8 on component EX-01.1-03P, the downstream extension of EX-01.1-02E, because of high readings: (H,3&4), (I,3&4), (M,3&4), (N,3&4), and (O,3&4).

3.27 For component EX-01.1-08R in RO8 the data point (O,9) was removed from the downstream main section and rows 3 & 4 were excluded from the wear calculation for the upstream main section.

3.28 For component EX-03.1C-13E in RO9 the data point (I,1) was removed from the main section.

3.29 Data file EX 02.16 03EMICR was not imported for RO10 because it is an expanded view of elbow EX-02.16-03E that is already associated with inspection file EX02 1603 .DAT.

3.30 Hot UT inspections taken on components EX-04.4-22T, EX-04.4-21P, and EX-04.6-01R during RO10P were repeated during RO10 to measure the difference between hot versus ambient temperature UT data. The RO10 UT data was not imported due to the lack of inspection data sheets.

3.31 Data file EX 02.17 03E SUP was not imported for R10 because it is an expanded view of elbow EX-02.17-03E that is already associated with inspection file EX021701 .DAT.

3.32 For RO10P inspections of tee branches EX-04.20-16T and EX-04.4-22T blank

UT data columns N-R were deleted and readings were assumed to be taken clockwise against flow (counterclockwise with flow). For component EX-04.4-22T the data point (K,3) was removed from the branch section.

3.33 For component EX-02.16-06E data points (AA,1), (AB,1), (Y,2), and (AB,3) were removed from the downstream extension analysis.

3.34 For component EX-03.1B-05T, the inspection was a partial grid on one section of the main. The grid was imported to CHECWORKS for historical purposes only and was therefore excluded from the calculation of the LCF.

3.35 UT inspection data for component EX-02.7-02T for RO9 was not imported due to questionable readings and the component was only partially gridded.

3.36 A number of inspections revealed piping components that had not been modeled previously. In each case, the component was added to the model in the correct location. The component name was obtained from the inspection packet. Pipe material and schedule was assumed to be identical as other piping components nearby. The following table lists the components that were added to the model.

Component	Inspection Report Number	Location
EX-02.9-07P	03UT141	Upstream of EX-02.9-07E
EX-02.9-10P	03UT141	Downstream of EX-02.9-09E
EX-02.13-03P	03UT086	Downstream of EX-02. 1 3-03E

3.37 The table below lists the components in this system that were replaced during this outage. These replacements are documented in inspection report number 03UT1 51. Line scan readings were performed prior to installation to obtain the minimum and maximum thickness of these components; however, no inspection was imported to the model as line scan readings cannot be used as a baseline exam by CHECWORKS.

EX-02.9-02P	EX-02.9-04P	EX-02.9-06P
EX-02.9-03E	EX-02.9-05E	

3.38 The geometry code of components EX-02.13-04E and EX-02.13-05P was changed to 3 and 53, respectively.

3.39 The nominal thickness of over fifty components was updated based on documentation from the Extraction Steam modification of 1987.

3.40 Component EX-01.1-08R had no file or data for the downstream extension in RO8.

4. Feedwater

4.1 The feedwater heaters inlet nozzles were internally weld over-layed with stainless steel material. In order to accurately model the existing weld overlay within CHECWORKS, the feedwater inlet nozzles were also replaced. The valves and turbine exit nozzles were left as is.

4.2 A straight pipe exists between components FW-03.1C-04B and FW-03.1C-05B. Therefore, components FW-03.1C-16P_1 and FW-03.1C-16P_2 were inserted as type 51 and type 9 respectively between those components.

4.3 Component FW-02.5-05P was deleted from the CHECWORKS database. The inspection report 99UT269 shows that there is no pipe between tees FW-02.4-19T and FW-02.5-01T.

4.4 Components FW-02.8A-25R, FW-02.8B-25R, FW-02.8D-24R, and FW-02.8C-24R were changed from Geometry Code 17 to Geometry Code 7.

4.5 Component FW-03.1A-08B was changed to Geometry Code 4 from Geometry Code 3.

4.6 Component FW-03.1C-05B was changed to Geometry Code 2 from Geometry Code 3.

4.7 Tinit was deleted from component FW-02.8B-22T since it resulted in an unrealistic value for calculated wear.

4.8 Tinit was deleted from the small end of component FW-01.2B-27R since it resulted in an unrealistic value for calculated wear.

4.9 The datasheet for the outage 9 inspection of component FW-01.3-09P listed FW013001.dat as the data file. However, file FW013001.dat was used for component FW-01.3-06E. File FW0130O1.dat was used instead. File FW0130O1.dat was slightly different than the datasheet and was modified to match by moving one data point and deleting another. To summarize, the data files for outage 9 were imported as follows:

Component	DAT File
FW-01.3-06E	FW013001
FW-01.3-05P	FW013002
FW-01.3-09P	FW0130O1
FW-01.3-18P	FW01310B
FW-01.3-08E	FW013O01
FW-01.3-07E	FW013O02

4.10 The first and last bands were excluded from the analysis of component FW-03.1A-08B's outage 9 inspection due to counterbore. Point (I,15) was also removed from this component since it was unrealistically low and provided an unrealistic value for measured wear.

4.11 Tinit was removed from the downstream main of component FW-02.8B-26R since it provided unrealistic calculated wear.

4.12 Point (N,8) was removed from component FW-02.8B-26R's RO9 inspection since it was unrealistically low and provided an unrealistic value for measured wear

4.13 Point (F,7) was removed from component FW-01.3-03E's outage 8 inspection since it was unrealistically low and provided an unrealistic value for measured wear.

4.14 Component FW-02.5-0 1T's branch is actually an elbolet, which is not modeled in CHECWORKS. The outage 10 inspection data was imported to the branch of FW-02.5-01T, however it was not used in the calculation of the LCF.

4.15 The outage 10 sketch for the branch extension of component FW-02.4-19T is unclear as to which end of pipe the rows begin. It was assumed that the inspection rows begin downstream of flow and move towards the tee.

4.16 Tinit was changed to 1.372 for the U/S and D/S Main of tee FW-02.5-01T to match with pipe FW-02.5-05P.

4.17 Inspection report number 03UT123 revealed a piping component that had not been modeled previously. This pipe was named FW-01.6B-07P and was located downstream of FW-01.6B-06E.

4.18 The component name was obtained from the inspection packet. Pipe material and schedule was assumed to be identical as other piping components nearby.

4.19 The initial thickness (Tinit) value of 1.3 12" was deleted for reducers FW-02.8C-25R and FW-02.8C-24R. The Tinit value was approximately 0.5" greater then Tnom. Removal of the Tinit value resulted in a significant reduction in calculated wear, around 0.3" less, and a more realistic calculated wear for the RO11 inspections.

4.20 Component FW-02.4-15E showed high wear due to a cluster of low readings caused by a lamination. These low readings were deleted to give a more accurate wear value and minimum thickness value. The deleted readings were: (C8, 0.513); (C9, 0.539); (C10, 0.668); (C11, 0.815); (D8, 0.582); (D10, 0.751); (D11, 0.837); (D12, 0.906); (E9, 0.759); and (E10, 0.811).

5. Heater Drains

5.1 Components HD-6.1A-35N, HD-6.1A-36N, HD-6.1B-30N, HD-6.1B-31N, HD-6.1C-26N, and HD-6.1C-27N were removed from the model. The isometric drawings change sheets at this location. The continuation symbol was mistakenly labeled as a nozzle.

5.2 The 1997 inspection of component HD-01.2B-01R shows that there is no pipe between the elbow and reducer. Therefore, component HD-01.1B-08P was removed from the model.

5.3 The expansion joints in the heater drain pump suction lines were modeled as orifices with the component number that was next in the series. An orifice diameter equal to 90% of the inside diameter of the pipe was used. Specifically, the components added were HD-10.2A-07X and HD-10.2B-06X.

5.4 The IP3 P&IDs show a "Temporary Strainer" in the heater drain pump suction lines. This was not modeled previously. Therefore, it was assumed that it was not installed and does not significantly affect wear rates.

5.5 Component HD-10.2B-01E was changed to Geometry Code 16 from Geometry Code 4.

5.6 Component HD-12.4-19T was removed from the model since it was previously modeled in the Condensate system as component CD-06.1-01T.

6. Moisture Preseparator Drains

6.1 The following is a list of components that required a material change:

Line Name	Component Name	Old Material	New Material
PD: DRNS FROM PRESEP 1B	PD-01.2-02B	A106/B/B	A53/B/S
	PD-01.2-03P	A106/B/B	A53/B/S
	PD-01.2-05P	A106/B/B	A53/B/S
	PD-01.2-07P	A106/B/B	A53/B/S
	PD-01.2-10O	A106/B/B	A53/B/S
PD: DRNS FROM PRESEP 1A	PD-01.4-02B	A106/B/B	A53/B/S
	PD-01.4-03P	A106/B/B	A53/B/S
	PD-01.4-05P	A106/B/B	A53/B/S
	PD-01.4-07P	A106/B/B	A53/B/S
	PD-01.4-10O	A106/B/B	A53/B/S
PD: DRNS FROM PRESEP 2B	PD-01.6-02B	A106/B/B	A53/B/S
	PD-01.6-03P	A106/B/B	A53/B/S
	PD-01.6-05P	A106/B/B	A53/B/S

Line Name	Component Name	Old Material	New Material
	PD-01.6-07P	A106/B/B	A53/B/S
	PD-01.6-09P	A106/B/B	A53/B/S
	PD-01.6-11P	A106/B/B	A53/B/S
	PD-01.6-14O	A106/B/B	A53/B/S
PD: DRNS FROM PRESEP 2A	PD-01.8-02B	A106/B/B	A53/B/S
	PD-01.8-03P	A106/B/B	A53/B/S
	PD-01.8-05P	A106/B/B	A53/B/S
	PD-01.8-07P	A106/B/B	A53/B/S
	PD-01.8-09P	A106/B/B	A53/B/S
	PD-01.8-11P	A106/B/B	A53/B/S
	PD-01.8-14O	A106/B/B	A53/B/S
PD: DRAINS TO HTR DRN	PD-02.1-01T	A106/B/B	A53/B/S
	PD-02.2-01T	A106/B/B	A53/B/S
	PD-02.4-22T	A106/B/B	A53/B/S
	PD-02.3-01T	A106/B/B	A53/B/S
	PD-02.4-01T	A106/B/B	A53/B/S
	PD-02.4-03P	A106/B/B	A53/B/S
	PD-02.4-05P	A106/B/B	A53/B/S
	PD-02.4-07P	A106/B/B	A53/B/S
	PD-02.4-09P	A106/B/B	A53/B/S
	PD-02.4-1 1P	A106/B/B	A53/B/S
	PD-02.4-13P	A106/B/B	A53/B/S
	PD-02.4-15P	A106/B/B	A53/B/S
	PD-02.4-17P	A106/B/B	A53/B/S
	PD-02.4-19P	A106/B/B	A53/B/S
	PD-02.4-20P	A106/B/B	A53/B/S

6.2 Tinit was removed from component PD-02.4-02E since it provided unrealistic calculated wear. Points (B,13) and (K,6) were also removed from the outage 8 inspection data because they were unrealistically high, and provided an unrealistic calculated wear.

6.3 The table below lists the Preseparator Drain components in line PD: DRAINS TO HTR DRN TANK that were replaced or installed during the RO12 MOPS/SCRUPS Modification DCP 01-3-072.

Component	Status Due to RO12 Design Modification
PD-02.4-02E	Replaced (component ID number re-assigned)
PD-02.4-03P	Replaced (component ID number re-assigned)
PD-02.4-04E	Replaced (component ID number re-assigned)
PD-02.4-05P	Replaced (component ID number re-assigned)
PD-02.4-22E	Initial Installation
PD-02.4-23R	Initial Installation

Component	Status Due to RO12 Design Modification
PD-02.4-24P	Initial Installation
PD-02.4-25T	Initial Installation
PD-02.4-26P	Initial Installation
PD-02.4-27P	Initial Installation
PD-02.4-28E	Initial Installation
PD-02.4-06E	Replaced (component ID number re-assigned)
PD-02.4-29R	Initial Installation
PD-02.4-30V	Initial Installation
PD-02.4-31R	Initial Installation
PD-02.4-32P	Initial Installation

7. Moisture Separator Drains

7.1 The Moisture Separator Drains from the Drain Tanks to the Heater Drain Tank were updated to reflect piping replacements during RFO10. The installation date was entered as 10/1/99. Certain sections of piping were divided to reflect the changes in material. In such cases, the existing component name was changed, with a "_1", "_2", or "_3" suffix added as needed. Piping tolerances were ignored when calculating pipe lengths for use in CHECWORKS.

7.2 The nozzles attached to the Moisture Separators are all at the same elevation according to the isometric drawings. However, the center tee is at a lower elevation than the outside tees. Therefore, a pup piece of pipe was added to the CHECWORKS model between the center nozzle and the center tee to account for this. The component was named with the next sequential number in the series.

7.3 Pipe MSD-01.5B-32P was added to the model to reflect the installation of a new pup piece with the elbow. No length was entered, since the length was unknown.

7.4 The inspection information on the D/S extension of MSD-0 1.1 5A- 1 7E was imported to component MSD-01.15A-18P since the pipe was inspected, replaced, and baselined.

7.5 Tinit for component MSD-01.5A-01E was causing over-calculation of wear and was thus deleted.

7.6 Point (L,11) was removed from the 1994 inspection of component MSD-01.5A-01E. This point was unrealistically high, and was providing inaccurate wear calculations.

7.7 Point (D,1) was removed from component MSD-01.8B-07P's 1997 Refueling Outage inspection, since it was providing an unrealistic value for measured wear.

7.8 Tinit for component MSD-01.15A-01E was removed since it was forcing an over-calculation of measured wear.

7.9 The first and last bands were excluded from the analysis of component MSD-01.7A-01T's Cycle 10B inspection due to counterbore.

7.10 The first and last bands were excluded from the analysis of component MSD-01.8A-01T's Cycle 10B inspection due to counterbore.

7.11 The first and 7th band was excluded from the analysis of component MSD-01.8B-0 1T's Cycle 11 inspection due to counterbore.

8. Reheater Drains

8.1 Component RHD02.5B-02R was replaced during refueling outage 10. Therefore, this component was replaced with an installation date of 10/18/99. This component was inspected during refueling outage 10 and the inspection was assumed to be prior to the replacement.

8.2 Component RHD01.12A-01T, which is actually an elbolet, was modeled as a Type 15 tee in CHECMATE. It was changed to a Type 12 tee, since flow is through the elbolet.

8.3 Points (A,4) and (M,6) were removed from the 1992 Refueling Outage inspection for component RHD01.8A-01R since they were obviously inaccurate.

8.4 Row 3 was excluded from the analysis of the 1997 Refueling Outage inspection on component RHD01.3B-01N since it was obviously a counterbore and provided an unrealistic value of wear.

8.5 Tinit for component RHD02.4B-02E was deleted since it provided an inaccurate value for measured wear using the 1992 Refueling Outage inspection data.

8.6 Column J was removed from the downstream extension of the 1992 Refueling Outage inspection on component RHD02.3B-02R since it provided unrealistic values for measured wear.

8.7 The 1999 Refueling Outage inspection data downstream of pipe RHD01.8A-02P was imported to the U/S Extension of Valve RHD02.3A-01V because the inspection data upstream of component RHD-02.3A-02R was previously imported to the Valve Main.

8.8 Counterbore was excluded from the analysis of the D/S Main of component RHD02.5A-02R in RO11.

8.9 Point P,2 (0.342) was deleted from the U/S Main of RHD-02.5B-02R in RO11. Counterbore was excluded from the analysis of the U/S Main as well.

9. Update for 3RO14

9.1 The model was updated with all information necessary to run Wear Rate Analysis (WRA) for plant conditions through Refuel Outage 14 (3R014), such as updates to the plant period table, water chemical treatments, WRA run definitions, replacements, UT inspection data, etc.

9.2 All 3R014 FAC inspections were imported to the appropriate component from FAC Manager. These inspections are listed in Appendix F. Only those components that were in the official CHECWORKS model were imported from FAC Manager.

9.3 Operating cycle 14 water chemistry was updated to reflect actual measured concentrations. This data appears in Appendix C.

9.4 The plant period table was updated with the actual Operating Cycle 14 start date, end date, and operating hours. Refuel 14 outage actual start and end dates were updated. Operating cycle 15 was updated with the actual start date, estimated end date, operating hours and water chemistry. This data appears in Appendix C.

9.5 The model was updated with the following 3R014 component replacements. The components were all replaced as-is.

System	Component	Geometry	Size
Reheater Drains	RHD02.15A-02E	Elbow	6"
Reheater Drains	RHD02.14B-14P	Pipe	6"
Reheater Drains	RHD02.6A-05P	Pipe	6"
Reheater Drains	RHD02.14B-02E	Elbow	6"
Reheater Drains	RHD02.15A-13P	Pipe	6"
Reheater Drains	RHD02.15A-11T	Tee	6"

In addition, the model was updated with replacements for the following components in RO13:

System	Component	Geometry	Size
Extraction Steam	EX-02.9-10P	Pipe	10"
Extraction Steam	EX-02.13-03P	Pipe	18"

9.6 The following components were added to the model based on an email sent to CSI from Harry Hartjen at Indian Point Unit 3. The email can be found in its entirety in Attachment A. The component data was assumed to be the same as the components found elsewhere in the same flow segment.

Line Name	Component	Geometry	Size
RHD-02.14B B HDR to FWH 36C	RHD02.14B-14P	Pipe	6"
RHD-02.15A A HDR to FWH 36C	RHD02.15A-13P	Pipe	6"

EX-02.4 PSEP2A 14" to 35 HDR	EX-02.4-07P	Pipe	14"
EX-02.11 PSEP1B 14" to 35 HDR	EX-02.11-07P	Pipe	14"
EX-02.8 PSEP 2B 10" to 35 HDR	EX-02.8-09P	Pipe	10"

9.7 The following components had their materials updated to a carbon steel material similar to other components. In the previous outage, the data was incorrectly set and are now set correctly as carbon steel.

EX-02.14-02E	EX-02.14-06E	EX-02.14-08E

9.8 Wear Rate Analysis run HD: HD PMP TO BFP HDR was changed to take advantage of the Advanced Run Definition due to incorrect values obtained from the HBD during analysis. Pressure, temperature and flow information were obtained from the three power level HBDs [7.18].

9.8 The following table displays the lines had their component flow orders changed. It also includes components that were created

Component	Geometry	Size	Isometric Number
Transport steam from Preseparator 2A Xunder			
EX-02.4-02P	PIPE	14	EC-H-50071
EX-02.4-03E	ELBOW	14	EC-H-50071
EX-02.4-04P	PIPE	14	EC-H-50071
EX-02.4-06O	ORIFICE	14	EC-H-50071
EX-02.4-07P	PIPE	14	EC-H-50071
EX-02.4-05T	TEE	14 / 18	EC-H-50071
Transport steam from Preseparator 1B			
EX-02.9--02P	PIPE	10	EC-H-50081
EX-02.9-03E	ELBOW	10	EC-H-50081
EX-02.9-04P	PIPE	10	EC-H-50081
EX-02.9-05E	ELBOW	10	EC-H-50081
EX-02.9-06P	PIPE	10	EC-H-50081
EX-02.9-11O	ORIFICE	10	EC-H-50081
EX-02.9-7P	PIPE	10	EC-H-50081
EX-02.9-07E	ELBOW	10	EC-H-50081
EX-02.9-08P	PIPE	10	EC-H-50081
EX-02.9-09E	ELBOW	10	EC-H-50081
EX-02.9-10P	PIPE	10	EC-H-50081
EX-02.9-10T	TEE	10 / 18	EC-H-50081
Transport steam from Preseparator 2B			
EX-02.8-02E	ELBOW	10	EC-H-50081
EX-02.8-03P	PIPE	10	EC-H-50081
EX-02.8-04E	ELBOW	10	EC-H-50081
EX-02.8-05P	PIPE	10	EC-H-50081
EX-02.8-07O	ORIFICE	10	EC-H-50081
EX-02.8-06E	ELBOW	10	EC-H-50081
EX-02.8-09P	PIPE	10	EC-H-50081

Component	Geometry	Size	Isometric Number
EX-02.8-08T	TEE	10 / 18	EC-H-50081
Transport steam from Preseparator 1B Xunder			
EX-02.11-02P	PIPE	14	EC-H-50081
EX-02.11-03E	ELBOW	14	EC-H-50081
EX-02.11-04P	PIPE	14	EC-H-50081
EX-02.11-06O	ORIFICE	14	EC-H-50081
EX-02.11-07P	PIPE	14	EC-H-50081
EX-02.11-05T	TEE	14 / 18	EC-H-50081
Steam from Preseparator 1B and 2B			
EX-02.12-01P	PIPE	18	EC-H-50082
EX-02.13-01P	PIPE	18	EC-H-50082
EX-02.13-02B	BEND	18	EC-H-50082
EX-02.13-03E	ELBOW	18	EC-H-50082
EX-02.13-03P	ELBOW	18	EC-H-50082
EX-02.13-04E	ELBOW	18	EC-H-50082
EX-02.13-05P	PIPE	18	EC-H-50082
EX-02.13-06R	ELBOW	18	EC-H-50082

Appendix B

Pass 2 Wear Rate Analysis Summary

Pass 2 Wear Rate Analysis Summary

WRA Run Name & Run Note	Is Run Calibrated?	Inspection Locations	Outliers	Correlation (Scatter)	LCF	Geometry Coverage	Parallel Train Coverage	Insp. D/S of CVs & Orifices	Notes
CD: HDR TO BFP	Yes	9	1	Good	1.259	Fair	Fair	Yes	Run can be considered calibrated based on Good correlation between predicted and measured wear and fulfillment of all other criterion. However it is recommended to perform more inspections, which should include elbows. This location corresponds to the Surry failure (Ref. 7.22.9, Ch 1) Future inspections should be done in accordance with FAC program guidelines for Pass 2 runs.
CD: HDR TO HTR 33	Yes	10	4	Moderate	1.260	Good	Good	N/A	Run can be considered calibrated based on moderate correlation between predicted and measured wear and fulfillment of all other criterion. The operating conditions for this Run being single phase and 198°F make it minimally susceptible to FAC. Future inspections should be done in accordance with FAC program guidelines for Pass 2 runs.
CD: HTR 31 TO HTR 32	No	0	N/A	N/A	N/A	N/A	N/A	N/A	There are no inspections for this Run. The operating conditions for this Run being single phase and 157°F make it minimally susceptible to FAC. Therefore it is not recommended to divert inspection resources to this Run.

WRA Run Name & Run Note	Is Run Calibrated?	Inspection Locations	Outliers	Correlation (Scatter)	LCF	Geometry Coverage	Parallel Train Coverage	Insp. D/S of CVs & Orifices	Notes
CD: HTR 32 TO 33 HDR	Yes	8	4	Moderate	1.179	Good	Good	N/A	Run can be considered calibrated based on moderate correlation between predicted and measured wear and fulfillment of all other criterion. The operating conditions for this Run being single phase and 198°F make it minimally susceptible to FAC.
CD: HTR 32 TO HDR	No	3	0	Good	0.990	Fair	Fair	N/A	At least 2 more inspections required preferably elbows or pipes downstream of valves before this Run may be considered for calibration. Note that the operating conditions for this Run being single phase and 198°F, make it minimally susceptible to FAC.
CD: HTR 33 TO HTR 34	Yes	9	0	Good	0.712	Good	Good	N/A	All calibration criterion has been met. Future inspections should be done in accordance with FAC program guidelines for Pass 2 runs.
CD: HTR 34 TO HTR 35	Yes	10	0	Good	0.508	Good	Good	N/A	Run can be considered calibrated based on Good correlation between predicted and measured wear and fulfillment of all other criterion. Future inspections should be done in accordance with FAC program guidelines for Pass 2 runs

WRA Run Name & Run Note	Is Run Calibrated?	Inspection Locations	Outliers	Correlation (Scatter)	LCF	Geometry Coverage	Parallel Train Coverage	Insp. D/S of CVs & Orifices	Notes
CD: HTR 35 TO BFP HDR	No	4	3	N/A	0.803	Good	Good	N/A	Run has only 4 inspection locations, but there remains only one component that has not been inspected. Therefore the number of inspection locations is adequate. This Run is not considered calibrated since there is only moderate correlation between predicted and measured wear, and the LCF is below desired range. Recommend reinspections on components with high wear and low predicted wear. Future inspections should be done in accordance with FAC program guidelines for Pass 2 runs.
CD: HTR 35 TO HDR	Yes	5	0	Good	0.637	Good	Fair	N/A	Run is considered calibrated based on adequate number of inspections, LCF is within the desired range. The correlation between predicted and measured wear is good. Future inspections should be done in accordance with FAC program guidelines for Pass 2 runs.
CD: S/G BLWDN HX IN	No	4	1	N/A	1.815	Fair	Good	Yes	Run needs to have at least one more inspection analyzed before this Run may be considered for calibration. The operating conditions for this Run are single phase and 198°F, which is minimally susceptible to FAC.

WRA Run Name & Run Note	Is Run Calibrated?	Inspection Locations	Outliers	Correlation (Scatter)	LCF	Geometry Coverage	Parallel Train Coverage	Insp. D/S of CVs & Orifices	Notes
CD: S/G BLDWN HX OUT	Yes	7	5	Moderate	3.247	Good	Good	N/A	Run is considered calibrated, however with the operating conditions for this Run being single phase and 198°F, which is minimally susceptible to FAC.
ES: HDR TO 35 HTRS	Yes	9	3	Good	1.144	Good	Good	N/A	Run can be considered calibrated based on the correlation between predicted and measured wear and fulfillment of all other criterion. Note that many components in this run have been replaced with non-susceptible material. Future inspections should be done in accordance with FAC program guidelines for Pass 2 runs.
ES: HDR TO 36 HTRS	No	7	4	Moderate	0.686	Fair	Good	N/A	Note that all components in this Run, except the valves, have been replaced with non-susceptible material. Therefore there is no need for future inspections. Run not considered calibrated based on only moderate correlation between predicted and measured wear, and LCF below the desired range.
ES: HTR 36 HEADER	Yes	10	3	Moderate	0.720	Good	Good	N/A	Run can be considered calibrated. All of the components have been replaced except the Nozzles.
ES: LP TO 31 HEATERS	No	0	0	N/A	N/A	N/A	N/A	N/A	There are no inspections for this run, operating conditions are < 200°F, however it is still a 2-phase fluid. Therefore it is recommended to perform some sort of inspection on these lines to document the level of wear.

WRA Run Name & Run Note	Is Run Calibrated?	Inspection Locations	Outliers	Correlation (Scatter)	LCF	Geometry Coverage	Parallel Train Coverage	Insp. D/S of CVs & Orifices	Notes
ES: LP TO 32 HEATERS	No	2	3	Moderate	0.318	Good	Poor	N/A	Run is not calibrated based on the need for parallel train coverage, and the fact that the LCF is below the desired range.
ES: LP TO 33 HEATERS	No	17	9	Moderate	1.865	Fair	Poor	N/A	Run is not considered calibrated based on the need for better parallel train coverage. Future inspections should be done in accordance with FAC program guidelines for Pass 2 runs.
ES: LP TO 34 HEATERS	Yes	7	0	Good	13.572	Good	Fair	N/A	Run can be considered calibrated based on good correlation between predicted and measured wear and fulfillment of all other criterion. However it is recommended to perform additional inspections on the "A" Train. Future inspections should be done in accordance with FAC program guidelines for Pass 2 runs. LCF change due to conversion of model from CHECWORKS 1.0G to SFA v2.2

WRA Run Name & Run Note	Is Run Calibrated?	Inspection Locations	Outliers	Correlation (Scatter)	LCF	Geometry Coverage	Parallel Train Coverage	Insp. D/S of CVs & Orifices	Notes
ES: PRESEP TO 35 HDR	Yes	24	9	Moderate	2.252	Good	Good	Yes	This run can be considered calibrated based on moderate correlation and fulfillment of all other criterion. The majority of components (including all orifices and d/s piping) have been replaced with FAC-resistant materials, however a number of carbon steel components remain. Future inspections on carbon steel components should be done in accordance with FAC program guidelines for Pass 2 runs.
FW: 36 HTR TO SG HDR	Yes	10	6	Moderate	3.876	Good	Good	N/A	Run can be considered calibrated based fulfillment of all criterion. However the LCF is still higher than the recommended range after more inspections and the correlation is still moderate. Therefore future inspections are recommended and should be done in accordance with FAC program guidelines for Pass 2 runs.
FW: BFP TO 36 HTR	Yes	30	19	Moderate	1.171	Good	Good	N/A	Run can be considered calibrated based on moderate correlation between predicted and measured wear and fulfillment of all other criterion. Future inspections should be done in accordance with FAC program guidelines for Pass 2 runs.

WRA Run Name & Run Note	Is Run Calibrated?	Inspection Locations	Outliers	Correlation (Scatter)	LCF	Geometry Coverage	Parallel Train Coverage	Insp. D/S of CVs & Orifices	Notes
FW: FW RECIRC	No	0	0	N/A	N/A	N/A	N/A	N/A	There are no inspections for the FW recirculating lines, since the lines are CrMo and not considered susceptible to FAC. Future inspections should be done in accordance with FAC program guidelines for Pass 2 runs.
FW: SG HEADERS	No	36	20	Moderate	3.423	Good	Fair	No	Run is not considered calibrated based on the need to perform inspections downstream of flow elements and a large number of outliers. Inspections should be performed downstream of the following components: FW-2.8A-12F, FW-2.8C-13F, and FW-2.8D-13F.
HD: HD PMP TO BFP HDR	Yes	10	3	Moderate	1.127	Good	Good	Yes	Run can be considered calibrated based on fulfillment of all criterion. Future inspections should be done in accordance with FAC program guidelines for Pass 2 runs.
HD: HTR 32 TO HTR 31	No	2	0	Good	1.863	Poor	Poor	Yes	There are few inspections for this Run. The operating conditions for this Run being single phase and 165°F make it minimally susceptible to FAC. Therefore it is not recommended to divert inspection resources to this Run.
HD: HTR 33 TO HTR 32	Yes	11	2	Good	1.045	Good	Good	Yes	Run can be considered calibrated due to good correlation and fulfillment of all other criterion. All piping d/s of controls valves has been inspected. Future inspections should be done in accordance with FAC program

WRA Run Name & Run Note	Is Run Calibrated?	Inspection Locations	Outliers	Correlation (Scatter)	LCF	Geometry Coverage	Parallel Train Coverage	Insp. D/S of CVs & Orifices	Notes
									guidelines for Pass 2 runs.
HD: HTR 34 TO HTR 33	Yes	8	3	Moderate	0.962	Good	Good	Yes	Run can be considered calibrated based on moderate correlation between predicted and measured wear and fulfillment of all other criterion. Future inspections should be done in accordance with FAC program guidelines for Pass 2 runs.
HD: HTR 35 TO HDT	Yes	6	1	Good	1.387	Good	Good	N/A	Run can be considered calibrated based on good correlation between predicted and measured wear and fulfillment of all other criterion. Future inspections should be done in accordance with FAC program guidelines for Pass 2 runs.

WRA Run Name & Run Note	Is Run Calibrated?	Inspection Locations	Outliers	Correlation (Scatter)	LCF	Geometry Coverage	Parallel Train Coverage	Insp. D/S of CVs & Orifices	Notes
HD: HTR 36 TO HDT	No	11	5	Poor	1.405	Good	Good	No	Run can not be considered calibrated based on poor correlation between predicted and measured wear. Inspections downstream of control valve HD-2.1B-01V fulfill the requirement of inspecting d/s of control valves. Future inspections should be done in accordance with FAC program guidelines for Pass 2 runs.
HD: HTR DN TO PUMPS	No	3	0	Moderate	0.597	Fair	Poor	Yes	Run may be considered calibrated after inspections on line HD-10. 1 .B. Future inspections should be done in accordance with FAC program guidelines for Pass 2 runs.
MSD: MS 31 TO HDT	No	14	6	Moderate	2.747	Good	Poor	N/A	Run is not considered calibrated due to lack of parallel train coverage. One inspection is required on lines MSD-1.1A_1, MSD-1.1A_2, or MSD-1.1A_3. Excluded the wear for component MSD-01.1B-06T (BR/SE) due to unrealistic wear. Future inspections should be done in accordance with FAC program guidelines for Pass 2 runs.
MSD: MS 32 TO MSDT	No	11	3	Moderate	13.991	Good	Poor	N/A	Run is not considered calibrated due to lack of parallel train coverage. One inspections is required one line MSD-1.6A_1, MSD-1.6A_2, or MSD-1.6A_3. Future inspections

WRA Run Name & Run Note	Is Run Calibrated?	Inspection Locations	Outliers	Correlation (Scatter)	LCF	Geometry Coverage	Parallel Train Coverage	Insp. D/S of CVs & Orifices	Notes
									should be done in accordance with FAC program guidelines for Pass 2 runs.
MSD: MS 33 TO MSDT	No	6	3	Moderate	11.643	Good	Poor	N/A	Run is not considered calibrated parallel train coverage is poor, 8 of the 10 lines in this Run are not inspected. The LCF is outside of the desired range. Future inspections should be done in accordance with FAC program guidelines for Pass 2 runs.
MSD: MSDT 32 TO HDT	Yes	12	0	Good	4.154	Good	Good	N/A	Run can be considered calibrated based on good correlation between predicted and measured wear and fulfillment of all other criterion, even though the LCF is outside the desired range. Future inspections should be done in accordance with FAC program guidelines for Pass 2 runs.
MSD: MSDT 33 TO HDT	Yes	18	7	Moderate	3.770	Good	Good	N/A	Run can be considered calibrated based on moderate correlation between predicted and measured wear and fulfillment of all other criterion. Future inspections should be done in accordance with FAC program guidelines for Pass 2

WRA Run Name & Run Note	Is Run Calibrated?	Inspection Locations	Outliers	Correlation (Scatter)	LCF	Geometry Coverage	Parallel Train Coverage	Insp. D/S of CVs & Orifices	Notes
									runs.
PD: PRESEPRTR DRAINS	No	7	1	Moderate	3.553	Good	Poor	No	Need inspections on lines PD1.1 and PD1.7, and downstream of valves 1.4-100, 1.6-140 and 1.8-140 before this run can be considered calibrated. Future inspections should be done in accordance with FAC program guidelines for Pass 2 runs.
RHD: RH 31 TO HDR	No	17	9	Moderate	2.284	Good	Poor	Yes	This run is not considered calibrated due to the lack of parallel train coverage. One inspection on line RHD-1.1B is required before this run can be considered calibrated. Future inspections should be done in accordance with FAC program guidelines for Pass 2 runs.
RHD: RH 32A TO HDR	No	10	9	Poor	3.653	Good	Good	Yes	Poor correlation between predicted and measured wear mean this run can not be considered calibrated. Future inspections should be done in accordance with FAC program guidelines for Pass 2 runs

WRA Run Name & Run Note	Is Run Calibrated?	Inspection Locations	Outliers	Correlation (Scatter)	LCF	Geometry Coverage	Parallel Train Coverage	Insp. D/S of CVs & Orifices	Notes
RHD: RH 32B TO HDR	No	19	21	Poor	3.327	Good	Good	Yes	This run is not considered calibrated due to poor correlation between predicted and measured wear. Other criterion appears to have been met. Future inspections should be done in accordance with FAC program guidelines for Pass 2 runs
RHD: RH 33 TO HDR	No	14	9	Moderate	3.474	Good	Poor	Yes	Need to have inspections on line RHD-1. 10A- 1 before this run can be considered calibrated. The LCF is outside of the desired range and there are a relatively large number of outliers. Future inspections should be done in accordance with FAC program guidelines for Pass 2 runs
RHD: RHD HDR TO HTRS	No	21	12	Poor	3.677	Good	Poor	N/A	This run is not considered calibrated since 2 of the lines that make up the run do not have inspections. Future inspections should be done in accordance with FAC program guidelines for Pass 2 runs

Appendix C

Global Data

Table C.1 Original Power Level Input Data

CHECWORKS Field	Power Level 100.0%	Reference
Steam Rate (Mlb/hr)	13.024152	7.18.1
Pressure (psia)	779.0	7.18.1
Temp (F)	515.2	7.18.1
Blowdown Rate (Mlb/hr)	0.100000	7.18.1
Carryover (%)	0.01	7.18.1
Feedwater Vent Rate (%)	x	CW User Guide
Reheater Vent Rate(%)	x	CW User Guide
Moisture Separator Carryunder (%)	x	CW User Guide
Notes: Original Power Level 3045.3 MWt		

x - Field should be left blank for a PWR.

Table C.2 Appendix K Power Level Input Data

CHECWORKS Field	Power Level 101 .1 2%	Reference
Steam Rate (Mlb/hr)	13.186870	7.18.2
Pressure (psia)	774.4	7.18.2
Temp (F)	514.5	7.18.2
Blowdown Rate (Mlb/hr)	0.057785	7.18.2
Carryover (%)	0.08	7.18.2
Feedwater Vent Rate (%)	x	CW User Guide
Reheater Vent Rate(%)	x	CW User Guide
Moisture Separator Carryunder (%)	x	CW User Guide
Notes: Appendix K Uprate. 3079.4 MWt		

x - Field should be left blank for a PWR.

Table C.3 SPU Power Level Input Data

CHECWORKS Field	Power Level 104.95%	Reference
Steam Rate (Mlb/hr)	13.783800	7.18.3
Pressure (psia)	760.4	7.18.3
Temp (F)	512.4	7.18.3
Blowdown Rate (Mlb/hr)	0.057785	7.18.3
Carryover (%)	0.08	7.18.3
Feedwater Vent Rate (%)	x	CW User Guide
Reheater Vent Rate(%)	x	CW User Guide
Moisture Separator Carryunder (%)	x	CW User Guide
Notes: Stretch Power Uprate. 3196.0 MWt		

x - Field should be left blank for a PWR.

Table C.4 Original Power Level Steam Cycle Input Data

HBD Item[1]	Location	Flow Rate (Mlb/hr)	Enthalpy (Btu/lbm)	Pressure (psia)	Temp (F)	Reference
FWHTR 1	Tube side outlet	x	x	x	423.2	7.18.1
FWHTR 2	Tube side outlet	x	x	x	371.6	7.18.1
FWHTR 3	Tube side outlet	x	x	x	293.6	7.18.1
FWHTR 4	Tube side outlet	x	x	x	243.8	7.18.1
FWHTR 5	Tube side outlet	x	x	x	191.8	7.18.1
FWHTR 6	Tube side outlet	x	x	x	155.7	7.18.1
SPUMP 1	Driven steam and drain enthalpy and pressure	0.116701	974.8	1.0	x	7.18.1
MSEP 1	Moist Sep & Moist PreSep Drains[2]	0.942923	364.8	221.9	x	7.18.1
TANK 1	Heater Drain Tank exiting steam	0	x	185.6	x	Note 4
TANK 2	Blowdown tank exiting steam	0	506.1	779.0	x	Note 4
RHTR 1	Reheater Drain	0.795863	495.3	644.7	x	7.18.1
HPEXTLINE 1	Conditions in line (Presep Outlet to FWH 5)[3]	0.929080	1136.9	185.6	x	7.18.1
HPEXTLINE 2	Conditions in line to FWH 6	0.706255	1136.9	340.4	x	7.18.1
LPEXTLINE 1	Conditions in line to FWH 4	0.502856	1177.4	64.98	x	7.18.1
LPEXTLINE 2	Conditions in line to FWH 3	0.475653	1120.6	27.85	x	Note 5
LPEXTLINE 3	Conditions in line to FWH 2	0.408297	815.4	10.72	x	Note 5
LPEXTLINE 4	Conditions in line to FWH 1	0.667055	858.0	5.04	x	Note 5

x = No value entered (not required by CHECWORKS).

(1) The HBD Item name is automatically generated by CHECWORKS. Feedwater heaters are numbered sequentially in reverse flow order. Feedwater Heater 1 is the feedwater heater closest to the steam generator (equivalent to heater 36 at Indian Point 3). Extraction lines are numbered sequentially in order of decreasing pressure.

(2) MSEP 1 represents the conditions in both the moisture separator and moisture pre-separator drain lines as recommended by EPRI Guidelines [7.3].

(3) HPEXTLINE 1 is a fictitious high-pressure extraction line representing the steam lines between the pre-separator and main separator as recommended by EPRI Guidelines [7.3].

(4) Flow rate is for exiting steam flow was entered as zero as recommended by EPRI Guidelines [7.3]. Pressure and enthalpy were obtained from the HBD "F" [7.18.1].

(5) Enthalpy calculated as the weighted average of the steam and liquid phases. Steam phase enthalpy was obtained directly from the PEPSE diagram as the enthalpy after moisture removal in the LP Turbine. Liquid phase enthalpy was calculated as the enthalpy of saturated liquid at the pressure given on the PEPSE diagram. [7. 18.1]

Table C.5 Appendix K Steam Cycle Input Data

HBD Item[1]	Location	Flow Rate (Mlb/hr)	Enthalpy (Btu/lbm)	Pressure (psia)	Temp (F)	Reference
FWHTR 1	Tube side outlet	x	x	x	425.0	7.18.2
FWHTR 2	Tube side outlet	x	x	x	374.7	7.18.2
FWHTR 3	Tube side outlet	x	x	x	296.6	7.18.2
FWHTR 4	Tube side outlet	x	x	x	243.0	7.18.2
FWHTR 5	Tube side outlet	x	x	x	196.4	7.18.2
FWHTR 6	Tube side outlet	x	x	x	155.3	7.18.2
SPUMP 1	Driven steam and drain enthalpy and pressure	0.147147	976.3	1.0	x	7.18.2
MSEP 1	Moist Sep & Moist PreSep Drains[2]	0.922509	355.9	199.8	x	7.18.2
TANK 1	Heater Drain Tank exiting steam	0	338.7	197.7	x	Note 4
TANK 2	Blowdown tank exiting steam	0	502.9	761.2	x	Note 4
RHTR 1	Reheater Drain	0.954357	506.5	623.3	x	7.18.2
HPEXTLINE 1	Conditions in line (Presep Outlet to FWH 5)[3]	0.935949	1148.2	200.9	x	7.18.2
HPEXTLINE 2	Conditions in line to FWH 6	0.751563	1138.6	361.4	x	7.18.2
LPEXTLINE 1	Conditions in line to FWH 4	0.531280	1197.4	74.54	x	7.18.2
LPEXTLINE 2	Conditions in line to FWH 3	0.447417	1075.7	31.29	x	Note 5
LPEXTLINE 3	Conditions in line to FWH 2	0.458881	906.1	12.80	x	Note 5
LPEXTLINE 4	Conditions in line to FWH 1	0.771656	907.0	5.55	x	Note 5

x = No value entered (not required by CHECWORKS).

(1) The HBD Item name is automatically generated by CHECWORKS. Feedwater heaters are numbered sequentially in reverse flow order. Feedwater Heater 1 is the feedwater heater closest to the steam generator (equivalent to heater 36 at Indian Point 3). Extraction lines are numbered sequentially in order of decreasing pressure.

(2) MSEP 1 represents the conditions in both the moisture separator and moisture pre-separator drain lines as recommended by EPRI Guidelines [7.3].

(3) HPEXTLINE 1 is a fictitious high-pressure extraction line representing the steam lines between the pre-separator and main separator as recommended by EPRI Guidelines [7.3].

(4) Flow rate is for exiting steam flow and was entered as zero as recommended by EPRI Guidelines [7.3]. Pressure and enthalpy were obtained from the Appendix K PEPSE model [7.18.2].

(5) Enthalpy was calculated as the weighted average of the steam and liquid phases. Steam phase enthalpy was obtained directly from the PEPSE diagram as the enthalpy after moisture removal in the LP Turbine. Liquid phase enthalpy was calculated as the enthalpy of saturated liquid at the pressure given on the PEPSE diagram [7.18.2].

Table C.6 SPU Steam Cycle Input Data

HBD Item[1]	Location	Flow Rate (Mlb/hr)	Enthalpy (Btu/lbm)	Pressure (psia)	Temp (F)	Reference
FWHTR 1	Tube side outlet	x	x	x	430.4	7.18.3
FWHTR 2	Tube side outlet	x	x	x	377.3	7.18.3
FWHTR 3	Tube side outlet	x	x	x	298.3	7.18.3
FWHTR 4	Tube side outlet	x	x	x	245.2	7.18.3
FWHTR 5	Tube side outlet	x	x	x	198.0	7.18.3
FWHTR 6	Tube side outlet	x	x	x	156.9	7.18.3
SPUMP 1	Driven steam and drain enthalpy and pressure	0.160926	974.8	1.0	x	7.18.3
MSEP 1	Moist Sep & Moist PreSep Drains[2]	1.097732	358.7	207.2	x	7.18.3
TANK 1	Heater Drain Tank exiting steam	0	342.5	203.3	x	Note 4
TANK 2	Blowdown tank exiting steam	0	502.8	760.4	x	Note 4
RHTR 1	Reheater Drain	0.870169	504.5	620.3	x	7.18.3
HPEXTLINE 1	Conditions in line (Presep Outlet to FWH 5)[3]	0.984482	1147.3	208.3	x	7.18.3
HPEXTLINE 2	Conditions in line to FWH 6	0.852604	1155.1	388.6	x	7.18.3
LPEXTLINE 1	Conditions in line to FWH 4	0.548842	1197.6	77.28	x	7.18.3
LPEXTLINE 2	Conditions in line to FWH 3	0.472533	1076.5	32.42	x	Note 5
LPEXTLINE 3	Conditions in line to FWH 2	0.475753	905.9	13.27	x	Note 5
LPEXTLINE 4	Conditions in line to FWH 1	0.790585	905.2	5.76	x	Note 5

x = No value entered (not required by CHECWORKS).

(1) The HBD Item name is automatically generated by CHECWORKS. Feedwater heaters are numbered sequentially in reverse flow order. Feedwater Heater 1 is the feedwater heater closest to the steam generator (equivalent to heater 36 at Indian Point 3). Extraction lines are numbered sequentially in order of decreasing pressure.

(2) MSEP 1 represents the conditions in both the moisture separator and moisture pre-separator drain lines as recommended by EPRI Guidelines [7.3].

(3) HPEXTLINE 1 is a fictitious high-pressure extraction line representing the steam lines between the pre-separator and main separator as recommended by EPRI Guidelines [7.3].

(4) Flow rate is for exiting steam flow and was entered as zero as recommended by EPRI Guidelines [7.3]. Pressure and enthalpy were obtained from the SPU PEPSE model [7.18.3].

(5) Enthalpy was calculated as the weighted average of the steam and liquid phases. Steam phase enthalpy was obtained directly from the PEPSE diagram as the enthalpy after moisture removal in the LP Turbine. Liquid phase enthalpy was calculated as the enthalpy of saturated liquid at the pressure given on the PEPSE diagram [7.18.3].

Table C.7 Cycle 1 Water Treatment Data Input

Species	Sample Location	Concentration	Units	Reference
Dissolved Oxygen	Condensate	15.67	ppb	7.19.2
Ammonia	Final Feed Water	0.680	ppm	7.19.2
Hydrazine	Final Feed Water	20.000	ppb	7.19.2
Hydrazine	SG Outlet	12.000	ppb	7.19.2
Hydrazine	MSR Drain	24.000	ppb	7.19.2

Note: This water treatment was used for Cycle 1
See Assumption 4.1.6 concerning this water treatment.

Table C.8 Cycle 2 Water Treatment Data Input

Species	Sample Location	Concentration	Units	Reference
Dissolved Oxygen	Condensate	16.43	ppb	7.19.2
Ammonia	Final Feed Water	0.480	ppm	7.19.2
Hydrazine	Final Feed Water	20.000	ppb	7.19.2
Hydrazine	SG Outlet	12.000	ppb	7.19.2
Hydrazine	MSR Drain	24.000	ppb	7.19.2

Note: This water treatment was used for Cycle 2
See Assumption 4.1.6 concerning this water treatment.

Table C.9 Cycle 3 Water Treatment Data Input

Species	Sample Location	Concentration	Units	Reference
Dissolved Oxygen	Condensate	11.72	ppb	7.19.2
Ammonia	Condensate	0.760	ppm	7.19.2
Hydrazine	Final Feed Water	25.000	ppb	7.19.2
Hydrazine	SG Outlet	15.000	ppb	7.19.2
Hydrazine	MSR Drain	30.000	ppb	7.19.2

Note: This water treatment was used for Cycles 3
See Assumption 4.1.6 concerning this water treatment.

Table C.10 Cycle 4 Water Treatment Data Input

Species	Sample Location	Concentration	Units	Reference
Dissolved Oxygen	Condensate	9.13	ppb	7.19.2
Ammonia	Final Feed Water	1.260	ppm	7.19.2
Hydrazine	Final Feed Water	40.000	ppb	7.19.2
Hydrazine	SG Outlet	24.000	ppb	7.19.2
Hydrazine	MSR Drain	48.000	ppb	7.19.2

Note: This water treatment was used for Cycle 4
See Assumption 4.1.6 concerning this water treatment.

Table C.1 1 Cycle 5 Water Treatment Data Input

Species	Sample Location	Concentration	Units	Reference
Dissolved Oxygen	Condensate	2.83	ppb	7.19.2
Ammonia	Final Feed Water	1.290	ppm	7.19.2
Hydrazine	Final Feed Water	40.000	ppb	7.19.2
Hydrazine	SG Outlet	24.000	ppb	7.19.2
Hydrazine	MSR Drain	48.000	ppb	7.19.2

Note: This water treatment was used for Cycle 5
See Assumption 4.1.6 concerning this water treatment.

Table C.12 Cycle 6 Water Treatment Data Input

Species	Sample Location	Concentration	Units	Reference
Dissolved Oxygen	Condensate	2.53	ppb	7.19.2
Ammonia	Final Feed Water	1.290	ppm	7.19.2
Hydrazine	Final Feed Water	40.000	ppb	7.19.2
Hydrazine	SG Outlet	24.000	ppb	7.19.2
Hydrazine	MSR Drain	48.000	ppb	7.19.2

Note: This water treatment was used for Cycle 6
See Assumption 4.1.6 concerning this water treatment.

Table C.13 Cycle 7 Water Treatment Data Input

Species	Sample Location	Concentration	Units	Reference
Dissolved Oxygen	Condensate	3.00	ppb	7.19.2
Morpholine	Final Feed Water	4.500	ppm	7.19.2
Hydrazine	Final Feed Water	58.000	ppb	7.19.2
Ammonia	Final Feed Water	0.060	ppm	7.19.2
Hydrazine	SG Outlet	34.800	ppb	7.19.2
Hydrazine	MSR Drain	69.600	ppb	7.19.2

Note: This water treatment was used for Cycle 7
See Assumption 4.1.6 concerning this water treatment.

Table C.14 Cycle 8 Water Treatment Data Input

Species	Sample Location	Concentration	Units	Reference
Dissolved Oxygen	Condensate	4.00	ppb	7.19.2
Morpholine	Final Feed Water	4.500	ppm	7.19.2
Hydrazine	Final Feed Water	190.000	ppb	7.19.2
Ammonia	Final Feed Water	0.200	ppm	7.19.2
Hydrazine	SG Outlet	114.000	ppb	7.19.2
Hydrazine	MSR Drain	228.000	ppb	7.19.2

Note: This water treatment was used for Cycle 8
See Assumption 4.1.6 concerning this water treatment.

Table C.15 Cycle 9 Water Treatment Data Input

Species	Sample Location	Concentration	Units	Reference
Dissolved Oxygen	Condensate	9.00	ppb	7.19.2
Morpholine	Final Feed Water	4.500	ppm	7.19.2
Hydrazine	Final Feed Water	225.000	ppm	7.19.2
Ammonia	Final Feed Water	0.680	ppb	7.19.2
Hydrazine	SG Outlet	135.000	ppb	7.19.2
Hydrazine	MSR Drain	270.000	ppb	7.19.2

Note: This water treatment was used for Cycles 9A-9B See Assumption 4.1.6 concerning this water treatment.

Table C.16 Cycle 10A Water Treatment Data Input

Species	Sample Location	Concentration	Units	Reference
Dissolved Oxygen	Condensate	1.80	ppb	7.19.2
Morpholine	Final Feed Water	4.500	ppm	7.19.2
Hydrazine	Final Feed Water	180.000	ppb	7.19.2
Ammonia	Condensate	2.000	ppb	7.19.2
Hydrazine	SG Outlet	108.000	ppb	7.19.2
Hydrazine	MSR Drain	2 16.000	ppb	7.19.2

Note: This water treatment was used for Cycle 10A See Assumption 4.1.6 concerning this water treatment.

Table C.17 Cycle 10B Water Treatment Data Input

Species	Sample Location	Concentration	Units	Reference
Dissolved Oxygen	Condensate	2.50	ppb	7.19.2
Ethanolamine	Final Feed Water	2.000	ppm	7.19.2
Hydrazine	Final Feed Water	225.000	ppb	7.19.2
Ammonia	Condensate	2.000	ppb	7.19.2
Hydrazine	SG Outlet	135.000	ppb	7.19.2
Hydrazine	MSR Drain	270.000	ppb	7.19.2

Note: This water treatment was used for Cycle 10B See Assumption 4.1.6 concerning this water treatment.

Table C.18 Cycle 11 Water Treatment Data Input

Species	Sample Location	Concentration	Units	Reference
Dissolved Oxygen	Condensate	3.3	ppb	7.19.2
Ethanolamine	Final Feed Water	2.400	ppm	7.19.2
Hydrazine	Final Feed Water	190.000	ppb	7.19.2
Ammonia	Final Feed Water	5.285	ppm	7.19.2
Hydrazine	SG Outlet	114.000	ppb	7.19.2
Hydrazine	MSR Drain	228.000	ppb	7.19.2

Note: This water treatment was used for Cycle 11
See Assumption 4.1.6 concerning this water treatment.

Table C.19 Cycle 12 Water Treatment Data Input

Species	Sample Location	Concentration	Units	Reference
Dissolved Oxygen	Condensate	0.69	ppb	7.19.2
Ethanolamine	Final Feed Water	3.558	ppm	7.19.2
Hydrazine	Final Feed Water	104.657	ppb	7.19.2
Ammonia	Final Feed Water	5.830	ppm	7.19.2
Hydrazine	SG Outlet	62.794	ppb	7.19.2
Hydrazine	MSR Drain	125.589	ppb	7.19.2

Note: This water treatment was used for Cycles 12A-12B
See Assumption 4.1.6 concerning this water treatment.

Table C.20 Cycle 13 Water Treatment Data Input

Species	Sample Location	Concentration	Units	Reference
Dissolved Oxygen	Condensate	3.34	ppb	7.27.7
Ethanolamine	Final Feed Water	3.423	ppm	7.27.7
Hydrazine	Final Feed Water	98.400	ppb	7.27.7
Ammonia	Final Feed Water	4.886	ppm	7.27.7
Hydrazine	SG Outlet	58.100	ppb	7.27.7
Hydrazine	MSR Drain	116.200	ppb	7.27.7

Table C.21 Cycle 14 Water Treatment Data Input

Species	Sample Location	Concentration	Units	Reference
Dissolved Oxygen	Condensate	2.987	ppb	7.19.10
Ethanolamine	Final Feed Water	4.808	ppm	7.19.10
Hydrazine	Final Feed Water	53.730	ppb	7.19.10
Ammonia	Final Feed Water	3.600	ppm	7.19.10
Hydrazine	SG Outlet	33.440	ppb	7.19.10
Hydrazine	MSR Drain	66.880	ppb	7.19.10

Note: This water treatment was used for Cycles 14-15 See Assumption 4.1.6 concerning this water treatment.

Table C.21 Plant Period Input Data

Period	Start Date	End Date	Type	Water Treatment	Power Level	Operating Hours	Reference
Cycle 1	6/27/1976	6/7/1978	Operating	Cycle 1	100	12117.6	7.19.2
RO1	6/7/1978	8/25/1978	Maintenance	----	----	----	7.19.2
Cycle 2	8/25/1 978	9/1 4/1 979	Operating	Cycle 2	100	7874.4	7.19.2
RO2	9/14/1979	2/11/1980	Maintenance	----	----	----	7.19.2
Cycle 3	2/11/1980	3/25/1982	Operating	Cycle 3	100	8944.8	7.19.2
RO3	3/25/1982	6/8/1983	Maintenance	----	----	----	7.19.2
Cycle 4	6/8/1983	6/7/1985	Operating	Cycle 4	100	9854.4	7.19.2
RO4	6/7/1985	10/4/1985	Maintenance	----	----	----	7.19.2
Cycle 5	10/4/1985	5/2/1987	Operating	Cycle 5	100	10012.8	7.19.2
RO5	5/2/1987	9/5/1987	Maintenance	----	----	----	7.19.2
Cycle 6	9/5/1987	2/4/1989	Operating	Cycle 6	100	10461.6	7.19.2
RO6	2/4/1989	6/25/1989	Maintenance	----	----	----	7.19.2
Cycle 7	6/25/1989	9/15/1990	Operating	Cycle 7	100	9463.2	7.19.2
RO7	9/15/1990	12/23/1990	Maintenance	----	----	----	7.19.2
Cycle 8	12/23/1990	4/18/1992	Operating	Cycle 8	100	9916.8	7.19.2
RO8	4/18/1992	7/2/1995	Maintenance	----	----	----	7.19.2
Cycle 9A	7/2/1995	9/14/1995	Operating	Cycle 9	100	1852.2	7.19.2
Winter 1995	9/15/1995	4/13/1996	Maintenance	----	----	----	7.19.2
Cycle 9B	4/14/1996	5/14/1997	Operating	Cycle 9	100	11703.0	7.19.2
RO9	5/14/1997	9/12/1997	Maintenance	----	----	----	7.19.2
Cycle 10A	9/12/1997	3/20/1998	Operating	Cycle 10A	100	3864.0	7.19.2
Cycle 10B	3/20/1998	9/10/1999	Operating	Cycle 10B	100	11841.6	7.19.2
RO10	9/10/1999	10/19/1999	Maintenance	----	----	----	7.19.2
Cycle 11	10/19/1999	4/27/2001	Operating	Cycle 11	100	13113.8	7.19.2
RO11	4/28/2001	5/23/2001	Maintenance	----	----	----	7.19.2
Cycle 12A	5/24/2001	12/21/2002	Operating	Cycle 12	100	13848.0	7.19.2
Cycle 1 2B	12/22/2002	3/28/2003	Operating	Cycle 12	101.12	2328.0	7.19.2
RO12	3/29/2003	4/23/2003	Maintenance	----	----	----	7.19.2
Cycle 13	4/24/2003	3/11/2005	Operating	Cycle 13	101.12	16268.0	7.19.2
RO13	3/11/2005	4/6/2005	Maintenance	----	----	----	7.19.2
Cycle 14	4/7/2005	3/6/2007	Operating	Cycle 14	104.95	16654.0	7.19.2
RO14	3/7/2007	3/31/2007	Maintenance	----	----	----	7.19.10
Cycle 15	4/1/2007	2/28/2009	Operating	Cycle 14	104.95	16900.0	7.19.10

Appendix D

CHECWORKS Modeled Lines

CHECWORKS Line Name	Line Description	Flow Diagram No.	Op Cond Source	Steam Cycle Loc. No.	Flow Factor	Duty Factor	WRA Run Name
CD-01.1A FWH 31A to FWH 32A	Cond: FW Heater 31 A to FW Heater 32A	EC-F-20183 SH. 1	HBD	8	0.333	1	CD: HTR 31 TO HTR 32
CD-01.1 B FWH 31 B to FWH 32B	Cond: FW Heater 31 B to FW Heater 32B	EC-F-20183 SH. 1	HBD	8	0.333	1	CD: HTR 31 TO HTR 32
CD-01.1C FWH 31C to FWH 32C	Cond: FW Heater 31 C to FW Heater 32C	EC-F-20183 SH. 1	HBD	8	0.333	1	CD: HTR 31 TO HTR 32
CD-02.11 SGBD HX3 to FWH HDR	Cond: FW Heaters 32 Outlet Header to SG Blowdown HX 3	EC-F-20183 SH. 2	HBD	7	0.038	1	CD: S/G BLWDN HX OUT
CD-02.1 A FWH 32A to HDR	Cond: FW Heater 32A to Header	EC-F-20183 SH. 1	HBD	7	0.333	1	CD: HTR 32 TO HDR
CD-02.1 B FWH 32B to HDR	Cond: FW Heater 32B to Header	EC-F-20183 SH. 1	HBD	7	0.333	1	CD: HTR 32 TO HDR
CD-02.1 C FWH 32C to HDR	Cond: FW Heater 32C to Header	EC-F-20183 SH. 1	HBD	7	0.333	1	CD: HTR 32 TO HDR
CD-02.2 FWH 32 OUT HDR	Cond: FW Heaters 32 Outlet Header Between 32B Connection and 32C Connection	EC-F-20183 SH. 1	HBD	7	0.667	1	CD: HTR 32 TO 33 HDR
CD-02.3 FWH 32 OUT HDR	Cond: FW Heaters 32 Outlet Header Between 32C Connection and Takeoff to SG Blowdown HX 3	EC-F-20183 SH. 1	HBD	7	1	1	CD: HTR 32 TO 33 HDR
CD-02.4 FWH 32 OUT HDR	Cond: FW Heaters 32 Outlet Header Between Takeoff to SG Blowdown HX 3 and Return from SG Blowdown HX 3	EC-F-20183 SH. 2	HBD	7	0.962	1	CD: HTR 32 TO 33 HDR
CD-02.5 FWH 32 OUT HDR	Cond: FW Heaters 32 Outlet Header Between Return from SG Blowdown HX 3 and 33C Takeoff	EC-F-20183 SH. 2	HBD	7	1	1	CD: HTR 32 TO 33 HDR

CHECWORKS Line Name	Line Description	Flow Diagram No.	Op Cond Source	Steam Cycle Loc. No.	Flow Factor	Duty Factor	WRA Run Name
CD-02.6 FWH 32 OUT HDR	Cond: FW Heaters 32 Outlet Header Between 33C Takeoff and 33B Takeoff	EC-F-20183 SH. 2	HBD	7	0.667	1	CD: HTR 32 TO 33 HDR
CD-02.8A HDR to FWH 33A	Cond: FW Heaters 32 Outlet Header to FW Heater 33A	EC-F-20183 SH. 2	HBD	7	0.333	1	CD: HDR TO HTR 33
CD-02.8B HDR to FWH 33B	Cond: FW Heaters 32 Outlet Header to FW Heater 33B	EC-F-20183 SH. 2	HBD	7	0.333	1	CD: HDR TO HTR 33
CD-02.8C HDR to FWH 33C	Cond: FW Heaters 32 Outlet Header to FW Heater 33C	EC-F-20183 SH. 2	HBD	7	0.333	1	CD: HDR TO HTR 33
CD-02.9 FWH HDR to SGBD HX3	Cond: SG Blowdown HX 3 to FW Heaters 32 Outlet Header	EC-F-20183 SH. 2	HBD	7	0.038	1	CD: S/G BLWDN HX IN
CD-03.1 A FWH 33A to FWH 34A	Cond: FW Heater 33A to FW Heater 34A	EC-F-20183 SH. 2	HBD	6	0.333	1	CD: HTR 33 TO HTR 34
CD-03.1 B FWH 33B to FWH 34B	Cond: FW Heater 33B to FW Heater 34B	EC-F-20183 SH. 2	HBD	6	0.333	1	CD: HTR 33 TO HTR 34
CD-03.1 C FWH 33C to FWH 34C	Cond: FW Heater 33C to FW Heater 34C	EC-F-20183 SH. 2	HBD	6	0.333	1	CD: HTR 33 TO HTR 34
CD-04.1 A FWH 34A to FWH 35A	Cond: FW Heater 34A to FW Heater 35A	EC-F-20183 SH. 2	HBD	5	0.333	1	CD: HTR 34 TO HTR 35
CD-04.1 B FWH 34B to FWH 35B	Cond: FW Heater 34B to FW Heater 35B	EC-F-20183 SH. 2	HBD	5	0.333	1	CD: HTR 34 TO HTR 35
CD-04.1 C FWH 34C to FWH 35C	Cond: FW Heater 34C to FW Heater 35C	EC-F-20183 SH. 2	HBD	5	0.333	1	CD: HTR 34 TO HTR 35
CD-05.1 A FWH 35A to HDR	Cond: FW Heater 35A to Header	EC-F-20183 SH. 2	HBD	4	0.333	1	CD: HTR 35 TO HDR
CD-05.1 B FWH 35B to HDR	Cond: FW Heater 35B to Header	EC-F-20183 SH. 2	HBD	4	0.333	1	CD: HTR 35 TO HDR
CD-05.1 C FWH 35C to HDR	Cond: FW Heater 35C to Header	EC-F-20183 SH. 2	HBD	4	0.333	1	CD: HTR 35 TO HDR

CHECWORKS Line Name	Line Description	Flow Diagram No.	Op Cond Source	Steam Cycle Loc. No.	Flow Factor	Duty Factor	WRA Run Name
CD-05.3 FWH 35 OUT HDR	Cond: FW Heaters 35 Outlet Header Between 35B Connection and 35C Connection	EC-F-20183 SH. 2	HBD	4	0.667	1	CD:HTR 35 TO BFP HDR
CD-05.4 FWH 35 OUT HDR	Cond: FW Heaters 35 Outlet Header Between 35C Connection and Heater Drain Pump Discharge Connection	EC-F-20183 SH. 2	HBD	4	1	1	CD:HTR 35 TO BFP HDR
CD-06.1 FWH 35 OUT HDR	Cond: FW Heaters 35 Outlet Header Between Heater Drain Pump Discharge Connection and Boiler Feed Pump Inlet Tee	EC-F-20183 SH. 2	COLA	3	1	1	CD: HDR TO BFP
CD-06.2A HDR to BFP 31	Cond: FW Heaters 35 Outlet Header to Boiler Feed Pump 31	EC-F-20183 SH. 2	COLA	3	0.5	1	CD: HDR TO BFP
CD-06.2B HDR to BFP 32	Cond: FW Heaters 35 Outlet Header to Boiler Feed Pump 32	EC-F-20183 SH. 2	COLA	3	0.5	1	CD: HDR TO BFP
EX-01.1 HP EXT to FWH 36 HDR	Ext Steam: HP Extraction from HP Turbine to FW Heater 36 Inlet Header (Line 1 of 2)	EC-F-20203 Sh. 1	HBD	17	0.5	1	ES: HTR 36 HEADER
EX-01.2 HP EXT to FWH 36 HDR	Ext Steam: HP Extraction from HP Turbine to FW Heater 36 Inlet Header (Line 2 of 2)	EC-F-20203 Sh. 1	HBD	17	0.5	1	ES: HTR 36 HEADER
EX-01.3 HP EXT FWH 36 HEADER	Ext Steam: HP Extraction Header Between HP Turbine Outlet Tee and FW Heater 36C Takeoff	EC-F-20203 Sh. 1	HBD	17	1	1	ES: HTR 36 HEADER
EX-01.4 HP EXT FWH 36 HEADER	Ext Steam: HP Extraction Header Between FW Heater 36C Takeoff and FW Heater 36B Takeoff	EC-F-20203 Sh. 1	HBD	17	0.667	1	ES: HTR 36 HEADER

CHECWORKS Line Name	Line Description	Flow Diagram No.	Op Cond Source	Steam Cycle Loc. No.	Flow Factor	Duty Factor	WRA Run Name
EX-01.5A HP EX HDR to FWH 36A	Ext Steam: HP Extraction Header to FW Heater 36A	EC-F-20203 Sh. 1	HBD	17	0.333	1	ES: HDR TO 36 HTRS
EX-01.5B HP EX HDR to FWH 36B	Ext Steam: HP Extraction Header to FW Heater 36B	EC-F-20203 Sh. 1	HBD	17	0.333	1	ES: HDR TO 36 HTRS
EX-01.5C HP EX HDR to FWH 36C	Ext Steam: HP Extraction Header to FW Heater 36C	EC-F-20203 Sh. 1	HBD	17	0.333	1	ES: HDR TO 36 HTRS
EX-02.1 PSEP 2A 10" to 35 HDR	Ext Steam: Moist PreSeparator 2A to Feedwater Heater 35 Inlet Header (10-Inch OD Line)	EC-F-20203 Sh. 1	COLA	18	0.25	1	ES: PRESEP TO 35 HDR
EX-02.11 PSEP1 B 14" to 35 HDR	Ext Steam: Moist PreSeparator 1 B to Feedwater Heater 35 Inlet Header (14-Inch OD Line)	EC-F-20203 Sh. 1	COLA	18	0.5	1	ES: PRESEP TO 35 HDR
EX-02.12 PSEP 1 B&2B to 35 HDR	Ext Steam: Moist PreSeparator 1 B and 2B Outlet Tee to Feedwater Heater 35 Inlet Header (Upstream of 14" Connection)	EC-F-20203 Sh. 1	COLA	18	0.5	1	ES: PRESEP TO 35 HDR
EX-02.13 PSEP 1 B&2B to 35 HDR	Ext Steam: Moist PreSeparator 1 B and 2B Outlet Tee to Feedwater Heater 35 Inlet Header (Downstream of 14" Connection)	EC-F-20203 Sh. 1	COLA	18	0.5	1	ES: PRESEP TO 35 HDR
EX-02.14 FWH 35 HEADER	Ext Steam: FW Heater 35 Inlet Header Between Moist PreSeparator Outlets and FW Heater 35C Takeoff	EC-F-20203 Sh. 1	COLA	18	1	1	ES: PRESEP TO 35 HDR
EX-02.15 FWH 35 HEADER	Ext Steam: FW Heater 35 Inlet Header Between FW Heater 35C Takeoff and FW Heater 35B Takeoff	EC-F-20203 Sh. 1	COLA	18	0.667	1	ES: PRESEP TO 35 HDR

CHECWORKS Line Name	Line Description	Flow Diagram No.	Op Cond Source	Steam Cycle Loc. No.	Flow Factor	Duty Factor	WRA Run Name
EX-02.16 HDR 35 to FWH 35A	Ext Steam: FW Heater 35 Inlet Header to Feedwater Heater 35A	EC-F-20203 Sh. 1	COLA	18	0.333	1	ES: HDR TO 35 HTRS
EX-02.17 HDR 35 to FWH 35B	Ext Steam: FW Heater 35 Inlet Header to Feedwater Heater 35B	EC-F-20203 Sh. 1	COLA	18	0.333	1	ES: HDR TO 35 HTRS
EX-02.18 HDR 35 to FWH 35C	Ext Steam: FW Heater 35 Inlet Header to Feedwater Heater 35C	EC-F-20203 Sh. 1	COLA	18	0.333	1	ES: HDR TO 35 HTRS
EX-02.2 PSEP 1A 10" to 35 HDR	Ext Steam: Moist PreSeparator 1A to Feedwater Heater 35 Inlet Header (10-Inch OD Line)	EC-F-20203 Sh. 1	COLA	18	0.25	1	ES: PRESEP TO 35 HDR
EX-02.4 PSEP2A 14" to 35 HDR	Ext Steam: Moist PreSeparator 2A to Feedwater Heater 35 Inlet Header (14-Inch OD Line)	EC-F-20203 Sh. 1	COLA	18	0.5	1	ES: PRESEP TO 35 HDR
EX-02.6 PSEP 1A&2A to 35 HDR	Ext Steam: Moist PreSeparator 1 A and 2A Outlet Tee to Feedwater Heater 35 Inlet Header (Upstream of 14" Connection)	EC-F-20203 Sh. 1	COLA	18	0.5	1	ES: PRESEP TO 35 HDR
EX-02.7 PSEP 1A&2A to 35 HDR	Ext Steam: Moist PreSeparator 1 A and 2A Outlet Tee to Feedwater Heater 35 Inlet Header (Downstream of 14" Connection)	EC-F-20203 Sh. 1	COLA	18	0.5	1	ES: PRESEP TO 35 HDR
EX-02.8 PSEP 2B 10" to 35 HDR	Ext Steam: Moist PreSeparator 2B to Feedwater Heater 35 Inlet Header (10-Inch OD Line)	EC-F-20203 Sh. 1	COLA	18	0.25	1	ES: PRESEP TO 35 HDR
EX-02.9 PSEP 1 B 10" to 35 HDR	Ext Steam: Moist PreSeparator 1 B to Feedwater Heater 35 Inlet Header (10-Inch OD Line)	EC-F-20203 Sh. 1	COLA	18	0.25	1	ES: PRESEP TO 35 HDR

CHECWORKS Line Name	Line Description	Flow Diagram No.	Op Cond Source	Steam Cycle Loc. No.	Flow Factor	Duty Factor	WRA Run Name
EX-03.1 A LP EXT 12 to FWH 34A	Ext Steam: LP Extraction No. 12 from LP Turbine 33 to FW Heater 34A	EC-F-20203 Sh. 2	HBD	21	0.333	1	ES: LP TO 34 HEATERS
EX-03.1 B LP EXT 12 to FWH 34B	Ext Steam: LP Extraction No. 12 from LP Turbine 32 to FW Heater 34B	EC-F-20203 Sh. 2	HBD	21	0.333	1	ES: LP TO 34 HEATERS
EX-03.1 C LP EXT 12 to FWH 34C	Ext Steam: LP Extraction No. 12 from LP Turbine 31 to FW Heater 34C	EC-F-20203 Sh. 2	HBD	21	0.333	1	ES: LP TO 34 HEATERS
EX-04.1 LPEX14 to FWH33A HDR	Ext Steam: LP Extraction No. 14 from LP Turbine 33 to Header Upstream of FW Heater 33A	EC-F-20203 Sh. 2	HBD	22	0.167	1	ES: LP TO 33 HEATERS
EX-04.11 LPEX FWH 33B IN HDR	Ext Steam: LP Extraction Header Upstream of FW Heater 33B	EC-F-20203 Sh. 2	HBD	22	0.333	1	ES: LP TO 33 HEATERS
EX-04.13 LP EXT 32 to FWH 33B	Ext Steam: LP Extraction Header to FW Heater 33B (Line 1 of 2)	EC-F-20203 Sh. 2	HBD	22	0.167	1	ES: LP TO 33 HEATERS
EX-04.14 LP EXT 32 to FWH 33B	Ext Steam: LP Extraction Header to FW Heater 33B (Line 2 of 2)	EC-F-20203 Sh. 2	HBD	22	0.167	1	ES: LP TO 33 HEATERS
EX-04.15 LPEX14 to FWH33C HDR	Ext Steam: LP Extraction No. 14 from LP Turbine 31 to Header Upstream of FW Heater 33C	EC-F-20203 Sh. 2	HBD	22	0.167	1	ES: LP TO 33 HEATERS
EX-04.16 LPEX13 to FWH33C HDR	Ext Steam: LP Extraction No. 13 from LP Turbine 31 to Header Upstream of FW Heater 33C	EC-F-20203 Sh. 2	HBD	22	0.167	1	ES: LP TO 33 HEATERS

CHECWORKS Line Name	Line Description	Flow Diagram No.	Op Cond Source	Steam Cycle Loc. No.	Flow Factor	Duty Factor	WRA Run Name
EX-04.18 LPEX FWH 33C IN HDR	Ext Steam: LP Extraction Header Upstream of FW Heater 33C	EC-F-20203 Sh. 2	HBD	22	0.333	1	ES: LP TO 33 HEATERS
EX-04.2 LPEX13 to FWH33A HDR	Ext Steam: LP Extraction No. 13 from LP Turbine 33 to Header Upstream of FW Heater 33A	EC-F-20203 Sh. 2	HBD	22	0.167	1	ES: LP TO 33 HEATERS
EX-04.21 LP EXT 31 to FWH 33C	Ext Steam: LP Extraction Header to FW Heater 33C (Line 1 of 2)	EC-F-20203 Sh. 2	HBD	22	0.167	1	ES: LP TO 33 HEATERS
EX-04.22 LP EXT 31 to FWH 33C	Ext Steam: LP Extraction Header to FW Heater 33C (Line 2 of 2)	EC-F-20203 Sh. 2	HBD	22	0.167	1	ES: LP TO 33 HEATERS
EX-04.4 LPEX FWH 33A IN HDR	Ext Steam: LP Extraction Header Upstream of FW Heater 33A	EC-F-20203 Sh. 2	HBD	22	0.333	1	ES: LP TO 33 HEATERS
EX-04.6 LP EXT to FWH 33A	Ext Steam: LP Extraction Header to FW Heater 33A (Line 1 of 2)	EC-F-20203 Sh. 2	HBD	22	0.167	1	ES: LP TO 33 HEATERS
EX-04.7 LP EXT to FWH 33A	Ext Steam: LP Extraction Header to FW Heater 33A (Line 2 of 2)	EC-F-20203 Sh. 2	HBD	22	0.167	1	ES: LP TO 33 HEATERS
EX-04.8 LPEX14 to FWH33B HDR	Ext Steam: LP Extraction No. 14 from LP Turbine 32 to Header Upstream of FW Heater 33B	EC-F-20203 Sh. 2	HBD	22	0.167	1	ES: LP TO 33 HEATERS
EX-04.9 LPEX13 to FWH33B HDR	Ext Steam: LP Extraction No. 13 from LP Turbine 32 to Header Upstream of FW Heater 33B	EC-F-20203 Sh. 2	HBD	22	0.167	1	ES: LP TO 33 HEATERS

CHECWORKS Line Name	Line Description	Flow Diagram No.	Op Cond Source	Steam Cycle Loc. No.	Flow Factor	Duty Factor	WRA Run Name
EX-05.1 A LP EXT 16 to FWH 32A	Ext Steam: LP Extraction No. 16 from LP Turbine 33 to FW Heater 32A	EC-F-20203 Sh. 2	HBD	23	0.167	1	ES: LP TO 32 HEATERS
EX-05.1 B LP EXT 16 to FWH 32B	Ext Steam: LP Extraction No. 16 from LP Turbine 32 to FW Heater 32B	EC-F-20203 Sh. 2	HBD	23	0.167	1	ES: LP TO 32 HEATERS
EX-05.1 C LP EXT 16 to FWH 32C	Ext Steam: LP Extraction No. 16 from LP Turbine 31 to FW Heater 32C	EC-F-20203 Sh. 2	HBD	23	0.167	1	ES: LP TO 32 HEATERS
EX-05.2A LP EXT 15 to FWH 32A	Ext Steam: LP Extraction No. 15 from LP Turbine 33 to FW Heater 32A	EC-F-20203 Sh. 2	HBD	23	0.167	1	ES: LP TO 32 HEATERS
EX-05.2B LP EXT 15 to FWH 32B	Ext Steam: LP Extraction No. 15 from LP Turbine 32 to FW Heater 32B	EC-F-20203 Sh. 2	HBD	23	0.167	1	ES: LP TO 32 HEATERS
EX-05.2C LP EXT 15 to FWH 32C	Ext Steam: LP Extraction No. 15 from LP Turbine 31 to FW Heater 32C	EC-F-20203 Sh. 2	HBD	23	0.167	1	ES: LP TO 32 HEATERS
EX-06.1 A LP EXT 19 to FWH 31A	Ext Steam: LP Extraction No. 19 from LP Turbine 33 to FW Heater 31A	EC-F-20203 Sh. 2	HBD	24	0.083	1	ES: LP TO 31 HEATERS
EX-06.1 B LP EXT 19 to FWH 31 B	Ext Steam: LP Extraction No. 19 from LP Turbine 32 to FW Heater 31 B	EC-F-20203 Sh. 2	HBD	24	0.083	1	ES: LP TO 31 HEATERS
EX-06.1 C LP EXT 19 to FWH 31 C	Ext Steam: LP Extraction No. 19 from LP Turbine 31 to FW Heater 31 C	EC-F-20203 Sh. 2	HBD	24	0.083	1	ES: LP TO 31 HEATERS
EX-06.2A LP EXT 17 to FWH 31A	Ext Steam: LP Extraction No. 17 from LP Turbine 33 to FW Heater 31A	EC-F-20203 Sh. 2	HBD	24	0.083	1	ES: LP TO 31 HEATERS

CHECWORKS Line Name	Line Description	Flow Diagram No.	Op Cond Source	Steam Cycle Loc. No.	Flow Factor	Duty Factor	WRA Run Name
EX-06.2B LP EXT 17 to FWH 31 B	Ext Steam: LP Extraction No. 17 from LP Turbine 32 to FW Heater 31 B	EC-F-20203 Sh. 2	HBD	24	0.083	1	ES: LP TO 31 HEATERS
EX-06.2C LP EXT 17 to FWH 31 C	Ext Steam: LP Extraction No. 17 from LP Turbine 31 to FW Heater 31 C	EC-F-20203 Sh. 2	HBD	24	0.083	1	ES: LP TO 31 HEATERS
EX-06.3A LP EXT 20 to FWH 31A	Ext Steam: LP Extraction No. 20 from LP Turbine 33 to FW Heater 31A	EC-F-20203 Sh. 2	HBD	24	0.083	1	ES: LP TO 31 HEATERS
EX-06.3B LP EXT 20 to FWH 31 B	Ext Steam: LP Extraction No. 20 from LP Turbine 32 to FW Heater 31 B	EC-F-20203 Sh. 2	HBD	24	0.083	1	ES: LP TO 31 HEATERS
EX-06.3C LP EXT 20 to FWH 31 C	Ext Steam: LP Extraction No. 20 from LP Turbine 31 to FW Heater 31 C	EC-F-20203 Sh. 2	HBD	24	0.083	1	ES: LP TO 31 HEATERS
EX-06.4A LP EXT 18 to FWH 31A	Ext Steam: LP Extraction No. 18 from LP Turbine 33 to FW Heater 31A	EC-F-20203 Sh. 2	HBD	24	0.083	1	ES: LP TO 31 HEATERS
EX-06.4B LP EXT 18 to FWH 31 B	Ext Steam: LP Extraction No. 18 from LP Turbine 32 to FW Heater 31 B	EC-F-20203 Sh. 2	HBD	24	0.083	1	ES: LP TO 31 HEATERS
EX-06.4C LP EXT 18 to FWH 31 C	Ext Steam: LP Extraction No. 18 from LP Turbine 31 to FW Heater 31 C	EC-F-20203 Sh. 2	HBD	24	0.083	1	ES: LP TO 31 HEATERS
FW-01.1 A BFP 31 to RCIRC T	Feed: Boiler Feed Pump 31 Discharge to Recirculation Takeoff	EC-F-20193	Z-type	2	0.5	1	FW: BFP TO 36 HTR
FW-01.1 B BFP 32 to RCIRC T	Feed: Boiler Feed Pump 32 Discharge to Recirculation Takeoff	EC-F-20193	Z-type	2	0.5	1	FW: BFP TO 36 HTR

CHECWORKS Line Name	Line Description	Flow Diagram No.	Op Cond Source	Steam Cycle Loc. No.	Flow Factor	Duty Factor	WRA Run Name
FW-01.2A BFP31 RCIRC T to HDR	Feed: Boiler Feed Pump 31 Discharge Between Recirculation Takeoff and Boiler Feed Pump Discharge Header	EC-F-20193	COLA	2	0.5	1	FW: BFP TO 36 HTR
FW-01.2B BFP32 RCIRC T to HDR	Feed: Boiler Feed Pump 32 Discharge Between Recirculation Takeoff and Boiler Feed Pump Discharge Header	EC-F-20193	COLA	2	0.5	1	FW: BFP TO 36 HTR
FW-01.3 BFP DISCHARGE HDR	Feed: Boiler Feed Pump Discharge Header Between Pumps Outlet Tee and FW Heater 36C Takeoff	EC-F-20193	COLA	2	1	1	FW: BFP TO 36 HTR
FW-01.4 BFP DISCHARGE HDR	Feed: Boiler Feed Pump Discharge Header Between FW Heater 36C Takeoff and FW Heater 36B Takeoff	EC-F-20193	COLA	2	0.667	1	FW: BFP TO 36 HTR
FW-01.6A BFP HDR to FWH 36A	Feed: Boiler Feed Pump Discharge Header to Feedwater Heater 36A	EC-F-20193	COLA	2	0.333	1	FW: BFP TO 36 HTR
FW-01.6B BFP HDR to FWH 36B	Feed: Boiler Feed Pump Discharge Header to Feedwater Heater 36B	EC-F-20193	COLA	2	0.333	1	FW: BFP TO 36 HTR
FW-01.6C BFP HDR to FWH 36C	Feed: Boiler Feed Pump Discharge Header to Feedwater Heater 36C	EC-F-20193	COLA	2	0.333	1	FW: BFP TO 36 HTR
FW-02.1 A FWH 36A to SG HDR	Feed: Feedwater Heater 36A to SG Inlet Header	EC-F-20193	HBD	1	0.333	1	FW: 36 HTR TO SG HDR
FW-02.1 B FWH 36B to SG HDR	Feed: Feedwater Heater 36B to SG Inlet Header	EC-F-20193	HBD	1	0.333	1	FW: 36 HTR TO SG HDR
FW-02.1 C FWH 36C to SG HDR	Feed: Feedwater Heater 36C to SG Inlet Header	EC-F-20193	HBD	1	0.333	1	FW: 36 HTR TO SG HDR

CHECWORKS Line Name	Line Description	Flow Diagram No.	Op Cond Source	Steam Cycle Loc. No.	Flow Factor	Duty Factor	WRA Run Name
FW-02.3 SG INLET HEADER	Feed: SG Inlet Header Between FW Heater 36B Connection and FW Heater 36C Connection	EC-F-20193	HBD	1	0.667	1	FW: SG HEADERS
FW-02.4 SG INLET HEADER	Feed: SG Inlet Header Between FW Heater 36C Connection and SG 31 Takeoff	EC-F-20193	HBD	1	1	1	FW: SG HEADERS
FW-02.5 SG INLET HEADER	Feed: SG Inlet Header Between SG 31 Takeoff and SG 32 Takeoff	EC-F-20193	HBD	1	0.75	1	FW: SG HEADERS
FW-02.6 SG INLET HEADER	Feed: SG Inlet Header Between SG 32 Takeoff and SG 34 Takeoff	EC-F-20193	HBD	1	0.5	1	FW: SG HEADERS
FW-02.8A SG HDR to SG 31	Feed: SG Inlet Header to SG 31	EC-F-20193	HBD	1	0.25	1	FW: SG HEADERS
FW-02.8B SG HDR to SG 32	Feed: SG Inlet Header to SG 32	EC-F-20193	HBD	1	0.25	1	FW: SG HEADERS
FW-02.8C SG HDR to SG 34	Feed: SG Inlet Header to SG 34	EC-F-20193	HBD	1	0.25	1	FW: SG HEADERS
FW-02.8D SG HDR to SG 33	Feed: SG Inlet Header to SG 33	EC-F-20193	HBD	1	0.25	1	FW: SG HEADERS
FW-04.1 A BFP 31 RECIRC	Feed: Boiler Feed Pump 31 Recirculation From BFP 31 Discharge Line to Drain Collecting Tank 31	EC-F-20193	COLA	2	1	0.02	FW: FW RECIRC
FW-04.1 B BFP 32 RECIRC	Feed: Boiler Feed Pump 32 Recirculation From BFP 32 Discharge Line to Drain Collecting Tank 31	EC-F-20193	COLA	2	1	0.02	FW: FW RECIRC
HD-01.1A FWH 36A to HD TK	Heater Dr: FW Heater 36A Drain to Heater Drain Tank	EC-F-20223 Sh. 1	COLA	11	0.333	1	HD: HTR 36 TO HDT

CHECWORKS Line Name	Line Description	Flow Diagram No.	Op Cond Source	Steam Cycle Loc. No.	Flow Factor	Duty Factor	WRA Run Name
HD-01.1 B FWH 36B to HD TK	Heater Dr: FW Heater 36B Drain to Heater Drain Tank	EC-F-20223 Sh. 1	COLA	11	0.333	1	HD: HTR 36 TO HDT
HD-01.1 C FWH 36C to HD TK	Heater Dr: FW Heater 36C Drain to Heater Drain Tank	EC-F-20223 Sh. 1	COLA	11	0.333	1	HD: HTR 36 TO HDT
HD-03.1 A FW H 35A to HD TK	Heater Dr: FW Heater 35A Drain to Heater Drain Tank	EC-F-20223 Sh. 1	COLA	12	0.333	1	HD: HTR 35 TO HDT
HD-03.1 B FWH 35B to HD TK	Heater Dr: FW Heater 35B Drain to Heater Drain Tank	EC-F-20223 Sh. 1	COLA	12	0.333	1	HD: HTR 35 TO HDT
HD-03.1 C FWH 35C to HD TK	Heater Dr: FW Heater 35C Drain to Heater Drain Tank	EC-F-20223 Sh. 1	COLA	12	0.333	1	HD: HTR 35 TO HDT
HD-04.1 A FW H 34A to FWH 33A	Heater Dr: FW Heater 34A Drain to FW Heater 33A	EC-F-20223 Sh. 2	COLA	13	0.333	1	HD: HTR 34 TO HTR 33
HD-04.1 B FWH 34B to FWH 33B	Heater Dr: FW Heater 34B Drain to FW Heater 33B	EC-F-20223 Sh. 2	COLA	13	0.333	1	HD: HTR 34 TO HTR 33
HD-04.1 C FWH 34C to FWH 33C	Heater Dr: FW Heater 34C Drain to FW Heater 33C	EC-F-20223 Sh. 2	COLA	13	0.333	1	HD: HTR 34 TO HTR 33
HD-06.1 A FW H 33A to FWH 32A	Heater Dr: FW Heater 33A Drain to FW Heater 32A	EC-F-20223 Sh. 2	COLA	14	0.333	1	HD: HTR 33 TO HTR 32
HD-06.1 B FWH 33B to FWH 32B	Heater Dr: FW Heater 33B Drain to FW Heater 32B	EC-F-20223 Sh. 2	COLA	14	0.333	1	HD: HTR 33 TO HTR 32
HD-06.1 C FWH 33C to FWH 32C	Heater Dr: FW Heater 33C Drain to FW Heater 32C	EC-F-20223 Sh. 2	COLA	14	0.333	1	HD: HTR 33 TO HTR 32
HD-08.1A FWH 32A to FWH 31A	Heater Dr: FW Heater 32A Drain to Tee Upstream of FW Heater 31A	EC-F-20223 Sh. 2	COLA	15	0.333	1	HD: HTR 32 TO HTR 31
HD-08.1 B FWH 32B to FWH 31 B	Heater Dr: FW Heater 32B Drain to Tee Upstream of FW Heater 31 B	EC-F-20223 Sh. 2	COLA	15	0.333	1	HD: HTR 32 TO HTR 31
HD-08.1 C FWH 32C to FWH 31 C	Heater Dr: FW Heater 32C Drain to Tee Upstream of FW Heater 31 C	EC-F-20223 Sh. 2	COLA	15	0.333	1	HD: HTR 32 TO HTR 31

CHECWORKS Line Name	Line Description	Flow Diagram No.	Op Cond Source	Steam Cycle Loc. No.	Flow Factor	Duty Factor	WRA Run Name
HD-09.3A FWH 32A to FWH 31A	Heater Dr: FW Heater 32A Drain from Tee Upstream of FW Heater 31 A to FW Heater 31A (Line 1 of 2)	EC-F-20223 Sh. 2	COLA	15	0.167	1	HD: HTR 32 TO HTR 31
HD-09.3B FWH 32B to FWH 31 B	Heater Dr: FW Heater 32B Drain from Tee Upstream of FW Heater 31 B to FW Heater 31 B (Line 1 of 2)	EC-F-20223 Sh. 2	COLA	15	0.167	1	HD: HTR 32 TO HTR 31
HD-09.3C FWH 32C to FWH 31 C	Heater Dr: FW Heater 32C Drain from Tee Upstream of FW Heater 31 C to FW Heater 31 C (Line 1 of 2)	EC-F-20223 Sh. 2	COLA	15	0.167	1	HD: HTR 32 TO HTR 31
HD-09.4A FWH 32A to FWH 31A	Heater Dr: FW Heater 32A Drain from Tee Upstream of FW Heater 31 A to FW Heater 31A (Line 2 of 2)	EC-F-20223 Sh. 2	COLA	15	0.167	1	HD: HTR 32 TO HTR 31
HD-09.4B FWH 32B to FWH 31 B	Heater Dr: FW Heater 32B Drain from Tee Upstream of FW Heater 31 B to FW Heater 31 B (Line 2 of 2)	EC-F-20223 Sh. 2	COLA	15	0.167	1	HD: HTR 32 TO HTR 31
HD-09.4C FWH 32C to FWH 31 C	Heater Dr: FW Heater 32C Drain from Tee Upstream of FW Heater 31 C to FW Heater 31 C (Line 2 of 2)	EC-F-20223 Sh. 2	COLA	15	0.167	1	HD: HTR 32 TO HTR 31
HD-10.1A HD TK to HD PMP 31	Heater Dr: Heater Drain Tank to Heater Drain Pump 31	EC-F-20223 Sh. 1	HBD	10	0.5	1	HD: HTR DN PUMPS
HD-10.1 B HD TK to HD PMP 32	Heater Dr: Heater Drain Tank to Heater Drain Pump 32	EC-F-20223 Sh. 1	HBD	10	0.5	1	HD: HTR DN PUMPS

CHECWORKS Line Name	Line Description	Flow Diagram No.	Op Cond Source	Steam Cycle Loc. No.	Flow Factor	Duty Factor	WRA Run Name
HD-11.1A HD PMP 31 to HDR	Heater Dr: Heater Drain Pump 31 Discharge to Heater Drain Pump Discharge Header	EC-F-20223 Sh. 1	COLA	9	0.5	1	HD: HD PMP TO BFP HDR
HD-11.1 B HD PMP 32 to HDR	Heater Dr: Heater Drain Pump 32 Discharge to Heater Drain Pump Discharge Header	EC-F-20223 Sh. 1	COLA	9	0.5	1	HD: HD PMP TO BFP HDR
HD-12.2A HD PMP HDR to CD SYS	Heater Dr: Heater Drain Pump Discharge Header to Connection with Condensate System at FW Heater 35 Outlet Header	EC-F-20223 Sh. 1	COLA	9	1	1	HD: HD PMP TO BFP HDR
MSD-01.11A_1 MSEP 33A to HDR	Moist Sep Dr: Moist Separator 33A Drain to Header (Line 1 of 3)	EC-F-20233 Sh. 1	COLA	19	0.056	1	MSD: MS 33 TO MSDT
MSD-01.11A_2 MSEP 33A to HDR	Moist Sep Dr: Moist Separator 33A Drain to Header (Line 2 of 3)	EC-F-20233 Sh. 1	COLA	19	0.056	1	MSD: MS 33 TO MSDT
MSD-01.11A_3 MSEP 33A to HDR	Moist Sep Dr: Moist Separator 33A Drain to Header (Line 3 of 3)	EC-F-20233 Sh. 1	COLA	19	0.056	1	MSD: MS 33 TO MSDT
MSD-01.11 B_1 MSEP 33B to HDR	Moist Sep Dr: Moist Separator 33B Drain to Header (Line 1 of 3)	EC-F-20233 Sh. 2	COLA	19	0.056	1	MSD: MS 33 TO MSDT
MSD-01.11 B_2 MSEP 33B to HDR	Moist Sep Dr: Moist Separator 33B Drain to Header (Line 2 of 3)	EC-F-20233 Sh. 2	COLA	19	0.056	1	MSD: MS 33 TO MSDT

CHECWORKS Line Name	Line Description	Flow Diagram No.	Op Cond Source	Steam Cycle Loc. No.	Flow Factor	Duty Factor	WRA Run Name
MSD-01.11 B_3 MSEP 33B to HDR	Moist Sep Dr: Moist Separator 33B Drain to Header (Line 3 of 3)	EC-F-20233 Sh. 2	COLA	19	0.056	1	MSD: MS 33 TO MSDT
MSD-01.12A MSEP 33A DR HDR	Moist Sep Dr: Moist Separator 33A Drain Header Upstream of Takeoff to Moist Separator Drain Tank	EC-F-20233 Sh. 1	COLA	19	0.111	1	MSD: MS 33 TO MSDT
MSD-01.12B MSEP 33B DR HDR	Moist Sep Dr: Moist Separator 33B Drain Header Upstream of Takeoff to Moist Separator Drain Tank	EC-F-20233 Sh. 2	COLA	19	0.111	1	MSD: MS 33 TO MSDT
MSD-01.13A HDR to MSEP TK 33A	Moist Sep Dr: Moist Separator 33A Drain Header to Moist Separator Drain Tank 33A	EC-F-20233 Sh. 1	COLA	19	0.167	1	MSD: MS 33 TO MSDT
MSD-01.13B HDR to MSEP TK 33B	Moist Sep Dr: Moist Separator 33B Drain Header to Moist Separator Drain Tank 33B	EC-F-20233 Sh. 2	COLA	19	0.167	1	MSD: MS 33 TO MSDT
MSD-01.14A TK 33A to HD TK	Moist Sep Dr: Moist Separator Drain Tank 33A to Heater Drain Tank	EC-F-20233 Sh. 1	COLA	19	0.167	1	MSD: MSDT 33 TO HDT
MSD-01.14B TK 33B to HD TK	Moist Sep Dr: Moist Separator Drain Tank 33B to Heater Drain Tank	EC-F-20233 Sh. 2	COLA	19	0.167	1	MSD: MSDT 33 TO HDT
MSD-01.1A_1 MSEP 31A to HDR	Moist Sep Dr: Moist Separator 31A Drain to Header (Line 1 of 3)	EC-F-20233 Sh. 1	COLA	19	0.056	1	MSD: MS 31 TO HDT
MSD-01.1A_2 MSEP 31A to HDR	Moist Sep Dr: Moist Separator 31A Drain to Header (Line 2 of 3)	EC-F-20233 Sh. 1	COLA	19	0.056	1	MSD: MS 31 TO HDT

CHECWORKS Line Name	Line Description	Flow Diagram No.	Op Cond Source	Steam Cycle Loc. No.	Flow Factor	Duty Factor	WRA Run Name
MSD-01.1A_3 MSEP 31A to HDR	Moist Sep Dr: Moist Separator 31A Drain to Header (Line 3 of 3)	EC-F-20233 Sh. 1	COLA	19	0.056	1	MSD: MS 31 TO HDT
MSD-01.1B_1 MSEP 31 B to HDR	Moist Sep Dr: Moist Separator 31 B Drain to Header (Line 1 of 3)	EC-F-20233 Sh. 2	COLA	19	0.056	1	MSD: MS 31 TO HDT
MSD-01.1 B_2 MSEP 31 B to HDR	Moist Sep Dr: Moist Separator 31 B Drain to Header (Line 2 of 3)	EC-F-20233 Sh. 2	COLA	19	0.056	1	MSD: MS 31 TO HDT
MSD-01.1 B_3 MSEP 31 B to HDR	Moist Sep Dr: Moist Separator 31 B Drain to Header (Line 3 of 3)	EC-F-20233 Sh. 2	COLA	19	0.056	1	MSD: MS 31 TO HDT
MSD-01.2A MSEP 31A DR HDR	Moist Sep Dr: Moist Separator 31A Drain Header Upstream of Takeoff to Moist Separator Drain Tank	EC-F-20233 Sh. 1	COLA	19	0.111	1	MSD: MS 31 TO HDT
MSD-01.2B MSEP 31 B DR HDR	Moist Sep Dr: Moist Separator 31 B Drain Header Upstream of Takeoff to Moist Separator Drain Tank	EC-F-20233 Sh. 2	COLA	19	0.111	1	MSD: MS 31 TO HDT
MSD-01.3A HDR to MSEP TK 31A	Moist Sep Dr: Moist Separator 31A Drain Header to Moist Separator Drain Tank 31A	EC-F-20233 Sh. 1	COLA	19	0.167	1	MSD: MS 31 TO HDT
MSD-01.3B HDR to MSEP TK 31 B	Moist Sep Dr: Moist Separator 31 B Drain Header to Moist Separator Drain Tank 31 B	EC-F-20233 Sh. 2	COLA	19	0.167	1	MSD: MS 31 TO HDT
MSD-01.4A TK 31 A to HD TK	Moist Sep Dr: Moist Separator Drain Tank 31 A to Heater Drain Tank	EC-F-20233 Sh. 1	COLA	19	0.167	1	MSD: MS 31 TO HDT

CHECWORKS Line Name	Line Description	Flow Diagram No.	Op Cond Source	Steam Cycle Loc. No.	Flow Factor	Duty Factor	WRA Run Name
MSD-01 .4B TK 31 B to HD TK	Moist Sep Dr: Moist Separator Drain Tank 31 B to Heater Drain Tank	EC-F-20233 Sh. 2	COLA	19	0.167	1	MSD: MS 31 TO HDT
MSD-01.6A_1 MSEP 32A to HDR	Moist Sep Dr: Moist Separator 32A Drain to Header (Line 1 of 3)	EC-F-20233 Sh. 1	COLA	19	0.056	1	MSD: MS 32 TO MSDT
MSD-01.6A_2 MSEP 32A to HDR	Moist Sep Dr: Moist Separator 32A Drain to Header (Line 2 of 3)	EC-F-20233 Sh. 1	COLA	19	0.056	1	MSD: MS 32 TO MSDT
MSD-01.6A_3 MSEP 32A to HDR	Moist Sep Dr: Moist Separator 32A Drain to Header (Line 3 of 3)	EC-F-20233 Sh. 1	COLA	19	0.056	1	MSD: MS 32 TO MSDT
MSD-01.6B_1 MSEP 32B to HDR	Moist Sep Dr: Moist Separator 32B Drain to Header (Line 1 of 3)	EC-F-20233 Sh. 2	COLA	19	0.056	1	MSD: MS 32 TO MSDT
MSD-01.6B_2 MSEP 32B to HDR	Moist Sep Dr: Moist Separator 32B Drain to Header (Line 2 of 3)	EC-F-20233 Sh. 2	COLA	19	0.056	1	MSD: MS 32 TO MSDT
MSD-01.6B_3 MSEP 32B to HDR	Moist Sep Dr: Moist Separator 32B Drain to Header (Line 3 of 3)	EC-F-20233 Sh. 2	COLA	19	0.056	1	MSD: MS 32 TO MSDT
MSD-01.7A MSEP 32A DR HDR	Moist Sep Dr: Moist Separator 32A Drain Header Upstream of Takeoff to Moist Separator Drain Tank	EC-F-20233 Sh. 1	COLA	19	0.111	1	MSD: MS 32 TO MSDT
MSD-01.7B MSEP 32B DR HDR	Moist Sep Dr: Moist Separator 32B Drain Header Upstream of Takeoff to Moist Separator Drain Tank	EC-F-20233 Sh. 2	COLA	19	0.111	1	MSD: MS 32 TO MSDT

CHECWORKS Line Name	Line Description	Flow Diagram No.	Op Cond Source	Steam Cycle Loc. No.	Flow Factor	Duty Factor	WRA Run Name
MSD-01.8A HDR to MSEP TK 32A	Moist Sep Dr: Moist Separator 32A Drain Header to Moist Separator Drain Tank 32A	EC-F-20233 Sh. 1	COLA	19	0.167	1	MSD: MS 32 TO MSDT
MSD-01.8B HDR to MSEP TK 32B	Moist Sep Dr: Moist Separator 32B Drain Header to Moist Separator Drain Tank 32B	EC-F-20233 Sh. 2	COLA	19	0.167	1	MSD: MS 32 TO MSDT
MSD-01.9A TK 32A to HD TK	Moist Sep Dr: Moist Separator Drain Tank 32A to Heater Drain Tank	EC-F-20233 Sh. 1	COLA	19	0.167	1	MSD: MSDT 32 TO HDT
MSD-01.9B TK 32B to HD TK	Moist Sep Dr: Moist Separator Drain Tank 32B to Heater Drain Tank	EC-F-20233 Sh. 2	COLA	19	0.167	1	MSD: MSDT 32 TO HDT
PD-01.1 PRESEP 1 B DR to HDR	Presep Dr: Moisture Preseparator 1 B Drain to Header	EC-F-20223 Sh. 1	COLA	19	0.25	1	PD: PRESEPRTR DRAINS
PD-01.3 PRESEP 1A DR to HDR	Presep Dr: Moisture Preseparator 1A Drain to Header	EC-F-20223 Sh. 1	COLA	19	0.25	1	PD: PRESEPRTR DRAINS
PD-01.5 PRESEP 2B DR to HDR	Presep Dr: Moisture Preseparator 2B Drain to Header	EC-F-20223 Sh. 1	COLA	19	0.25	1	PD: PRESEPRTR DRAINS
PD-01.7 PRESEP 2A DR to HDR	Presep Dr: Moisture Preseparator 2A Drain to Header	EC-F-20223 Sh. 1	COLA	19	0.25	1	PD: PRESEPRTR DRAINS
PD-02.2 PRESEP HDR to HD TK	Presep Dr: Moisture Preseparators Drain Header Between 1A Connection and 2B Connection	EC-F-20223 Sh. 1	COLA	19	0.5	1	PD: PRESEPRTR DRAINS

CHECWORKS Line Name	Line Description	Flow Diagram No.	Op Cond Source	Steam Cycle Loc. No.	Flow Factor	Duty Factor	WRA Run Name
PD-02.3 PRESEP HDR to HD TK	Presep Dr: Moisture Preseparators Drain Header Between 2B Connection and 2A Connection	EC-F-20223 Sh. 1	COLA	19	0.75	1	PD: PRESEPRTR DRAINS
PD-02.4 PRESEP HDR to HD TK	Presep Dr: Moisture Preseparators Drain Header to Heater Drain Tank	EC-F-20223 Sh. 1	COLA	19	1	1	PD: PRESEPRTR DRAINS
RHD-01.10A_1 RH 33A to TK 33A	Reheater Dr: Reheater 33A Drain to Reheater Drain Tank 33A	EC-F-20233 Sh. 1	HBD	20	0.167	1	RHD: RH 33 TO HDR
RHD-01.10A_2 TK 33A to A HDR	Reheater Dr: Reheater Drain Tank 33A to Reheater Drain Tank "A-Train" Header	EC-F-20233 Sh. 1	HBD	20	0.167	1	RHD: RH 33 TO HDR
RHD-01.10B_1 RH 33B to TK 33B	Reheater Dr: Reheater 33B Drain to Reheater Drain Tank 33B	EC-F-20233 Sh. 2	HBD	20	0.167	1	RHD: RH 33 TO HDR
RHD-01.10B_2 TK 33B to B HDR	Reheater Dr: Reheater Drain Tank 33B to Reheater Drain Tank "B-Train" Header	EC-F-20233 Sh. 2	HBD	20	0.167	1	RHD: RH 33 TO HDR
RHD-01.1A_1 RH 31A to TK 31A	Reheater Dr: Reheater 31 A Drain to Reheater Drain Tank 31A	EC-F-20233 Sh. 1	HBD	20	0.167	1	RHD: RH 31 TO HDR
RHD-01.1 A_2 TK 31 A to A HDR	Reheater Dr: Reheater Drain Tank 31 A to Reheater Drain Tank "A-Train" Header	EC-F-20233 Sh. 1	HBD	20	0.167	1	RHD: RH 31 TO HDR
RHD-01.1B_1 RH 31 B to TK 31 B	Reheater Dr: Reheater 31 B Drain to Reheater Drain Tank 31 B	EC-F-20233 Sh. 2	HBD	20	0.167	1	RHD: RH 31 TO HDR

CHECWORKS Line Name	Line Description	Flow Diagram No.	Op Cond Source	Steam Cycle Loc. No.	Flow Factor	Duty Factor	WRA Run Name
RHD-01.1 B_2 TK 31 B to B HDR	Reheater Dr: Reheater Drain Tank 31 B to Reheater Drain Tank "B-Train" Header	EC-F-20233 Sh. 2	HBD	20	0.167	1	RHD: RH 31 TO HDR
RHD-01.3A_1 RH 32A to TK 32A	Reheater Dr: Reheater 32A Drain to Reheater Drain Tank 32A	EC-F-20233 Sh. 1	HBD	20	0.167	1	RHD: RH 32A TO HDR
RHD-01.3A_2 TK 32A to A HDR	Reheater Dr: Reheater Drain Tank 32A to Reheater Drain Tank "A-Train" Header	EC-F-20233 Sh. 1	HBD	20	0.167	1	RHD: RH 32A TO HDR
RHD-01.3B_1 RH 32B to TK 32B	Reheater Dr: Reheater 32B Drain to Reheater Drain Tank 32B	EC-F-20233 Sh. 2	HBD	20	0.167	1	RHD: RH 32B TO HDR
RHD-01.3B_2 TK 32B to B HDR	Reheater Dr: Reheater Drain Tank 32B to Reheater Drain Tank "B-Train" Header	EC-F-20233 Sh. 2	HBD	20	0.167	1	RHD: RH 32B TO HDR
RHD-02.10A TK A HDR to FWH 36	Reheater Dr: Reheater Drain Tanks Outlet "A-Train" Header Between FW Heater 36C Takeoff and FW Heater 36B Takeoff	EC-F-20233 Sh. 2	HBD	20	0.333	1	RHD: RHD HDR TO HTRS
RHD-02.10B B HDR to FWH 36A	Reheater Dr: Reheater Drain Tank "B-Train" Header to FW Heater 36A	EC-F-20233 Sh. 2	HBD	20	0.167	1	RHD: RHD HDR TO HTRS
RHD-02.11A A HDR to FWH 36A	Reheater Dr: Reheater Drain Tank "A-Train" Header to FW Heater 36A	EC-F-20233 Sh. 2	HBD	20	0.167	1	RHD: RHD HDR TO HTRS
RHD-02.12B B HDR to FWH 36B	Reheater Dr: Reheater Drain Tank "B-Train" Header to FW Heater 36B	EC-F-20233 Sh. 2	HBD	20	0.167	1	RHD: RHD HDR TO HTRS

CHECWORKS Line Name	Line Description	Flow Diagram No.	Op Cond Source	Steam Cycle Loc. No.	Flow Factor	Duty Factor	WRA Run Name
RHD-02.13A A HDR to FWH 36B	Reheater Dr: Reheater Drain Tank "A-Train" Header to FW Heater 36B	EC-F-20233 Sh. 2	HBD	20	0.167	1	RHD: RHD HDR TO HTRS
RHD-02.14B B HDR to FWH 36C	Reheater Dr: Reheater Drain Tank "B-Train" Header to FW Heater 36C	EC-F-20233 Sh. 2	HBD	20	0.167	1	RHD: RHD HDR TO HTRS
RHD-02.15A A HDR to FWH 36C	Reheater Dr: Reheater Drain Tank "A-Train" Header to FW Heater 36C	EC-F-20233 Sh. 2	HBD	20	0.167	1	RHD: RHD HDR TO HTRS
RHD-02.7B TK B HDR to FWH 36	Reheater Dr: Reheater Drain Tanks Outlet "B-Train" Header Between Tank 33B Connection and Tank 32B Connection	EC-F-20233 Sh. 2	HBD	20	0.333	1	RHD: RHD HDR TO HTRS
RHD-02.8A TK A HDR to FWH 36	Reheater Dr: Reheater Drain Tanks Outlet "A-Train" Header Between Tank 33A Connection and Tank 31A Connection	EC-F-20233 Sh. 1	HBD	20	0.333	1	RHD: RHD HDR TO HTRS
RHD-02.8B TK B HDR to FWH 36	Reheater Dr: Reheater Drain Tanks Outlet "B-Train" Header Between Tank 32B Connection and FW Heater 36C Takeoff	EC-F-20233 Sh. 2	HBD	20	0.5	1	RHD: RHD HDR TO HTRS
RHD-02.9A TK A HDR to FWH 36	Reheater Dr: Reheater Drain Tanks Outlet "A-Train" Header Between Tank 31A Connection and FW Heater 36C Takeoff	EC-F-20233 Sh. 1	HBD	20	0.5	1	RHD: RHD HDR TO HTRS
RHD-02.9B TK B HDR to FWH 36	Reheater Dr: Reheater Drain Tanks Outlet "B-Train" Header Between FW Heater 36C Takeoff and FW Heater 36B Takeoff	EC-F-20233 Sh. 2	HBD	20	0.333	1	RHD: RHD HDR TO HTRS

Appendix E

Component Summary Report

Table of Contents

Report	Page
Component Summary Report	E-2
Component History Report	E-57

Company : Entergy Nuclear Operations, Inc.
Plant : Indian Point
Unit : 3
DB Name: IPEC3

Report Date : 12-Nov-2007
Report Time : 15:57:30

CHECWORKS SFA Version: 2.2 SP-1 (build 70)

Component Summary Report
(By Flow Order)

SELECTION CRITERIA:

Line Name: *
Drawing Name: *
Comp. Service Status: *

Component Name	Geom Code	Pipe Size OD (in)	Sch.	Tnom (in)	Tinit (in)	Tcrit (in)	Br/Small End OD (in)	Br/Small Tnom (in)	R / D Ratio	Orient Angle (Deg.)	Pipe Length (in)	Spec/Type/ Class	Material Cr. (%)	Cu. (%)	Mo. (%)	Design Press. (psig)	Design Temp. (Deg. F)	Op. Press. (psig)	Op. Temp. (Deg. F)	Op. Enth. (Btu/lbm)	Op. Qual.	Flow Rate U/S Mn. (Mlbm/hr)	D/S Mn. (Mlbm/hr)	Br.
Line Name : CD-01.1A FWH 31A to FWH 32A																								
CD-01.1A-01N	31	14.000	0	0.438	0.438	0.000	0.000	0.000	0.00	90	0.00	A106/BB/	0.00	0.00	0.00	665	400	-10	156	0.000	0.000	3.12600	0.00000	0.00000
CD-01.1A-02P	61	14.000	0	0.438	0.438	0.000	0.000	0.000	0.00	30	0.00	A106/BB/	0.00	0.00	0.00	665	400	-10	156	0.000	0.000	3.12600	0.00000	0.00000
CD-01.1A-03E	2	14.000	0	0.438	0.438	0.000	0.000	0.000	1.50	90	0.00	A234/WPBWPB/	0.00	0.00	0.00	665	400	-10	156	0.000	0.000	3.12600	0.00000	0.00000
CD-01.1A-04P	52	14.000	0	0.438	0.438	0.000	0.000	0.000	0.00	90	0.00	A106/BB/	0.00	0.00	0.00	665	400	-10	156	0.000	0.000	3.12600	0.00000	0.00000
CD-01.1A-05E	2	14.000	0	0.438	0.438	0.000	0.000	0.000	1.50	90	0.00	A234/WPBWPB/	0.00	0.00	0.00	665	400	-10	156	0.000	0.000	3.12600	0.00000	0.00000
CD-01.1A-06E	4	14.000	0	0.438	0.438	0.000	0.000	0.000	1.50	90	0.00	A234/WPBWPB/	0.00	0.00	0.00	665	400	-10	156	0.000	0.000	3.12600	0.00000	0.00000
CD-01.1A-07E	4	14.000	0	0.438	0.438	0.000	0.000	0.000	1.50	90	0.00	A234/WPBWPB/	0.00	0.00	0.00	665	400	-10	156	0.000	0.000	3.12600	0.00000	0.00000
CD-01.1A-08P	54	14.000	0	0.438	0.438	0.000	0.000	0.000	0.00	180	0.00	A106/BB/	0.00	0.00	0.00	665	400	-10	156	0.000	0.000	3.12600	0.00000	0.00000
CD-01.1A-09E	2	14.000	0	0.438	0.438	0.000	0.000	0.000	1.50	90	0.00	A234/WPBWPB/	0.00	0.00	0.00	665	400	-10	156	0.000	0.000	3.12600	0.00000	0.00000
CD-01.1A-10P	52	14.000	0	0.438	0.438	0.000	0.000	0.000	0.00	90	0.00	A106/BB/	0.00	0.00	0.00	665	400	-10	156	0.000	0.000	3.12600	0.00000	0.00000
CD-01.1A-11E	4	14.000	0	0.438	0.438	0.000	0.000	0.000	1.50	90	0.00	A234/WPBWPB/	0.00	0.00	0.00	665	400	-10	156	0.000	0.000	3.12600	0.00000	0.00000
CD-01.1A-12P	54	14.000	0	0.438	0.438	0.000	0.000	0.000	0.00	30	0.00	A106/BB/	0.00	0.00	0.00	665	400	-10	156	0.000	0.000	3.12600	0.00000	0.00000
CD-01.1A-13N	30	14.000	0	0.438	0.438	0.000	0.000	0.000	0.00	90	0.00	A106/BB/	0.00	0.00	0.00	665	400	-10	156	0.000	0.000	3.12600	0.00000	0.00000
Line Name : CD-01.1B FWH 31B to FWH 32B																								
CD-01.1B-01N	31	14.000	0	0.438	0.438	0.000	0.000	0.000	0.00	90	0.00	A106/BB/	0.00	0.00	0.00	665	400	-10	156	0.000	0.000	3.12600	0.00000	0.00000
CD-01.1B-02P	61	14.000	0	0.438	0.438	0.000	0.000	0.000	0.00	30	0.00	A106/BB/	0.00	0.00	0.00	665	400	-10	156	0.000	0.000	3.12600	0.00000	0.00000
CD-01.1B-03E	2	14.000	0	0.438	0.438	0.000	0.000	0.000	1.50	90	0.00	A234/WPBWPB/	0.00	0.00	0.00	665	400	-10	156	0.000	0.000	3.12600	0.00000	0.00000
CD-01.1B-04P	52	14.000	0	0.438	0.438	0.000	0.000	0.000	0.00	90	0.00	A106/BB/	0.00	0.00	0.00	665	400	-10	156	0.000	0.000	3.12600	0.00000	0.00000
CD-01.1B-05E	2	14.000	0	0.438	0.438	0.000	0.000	0.000	1.50	90	0.00	A234/WPBWPB/	0.00	0.00	0.00	665	400	-10	156	0.000	0.000	3.12600	0.00000	0.00000
CD-01.1B-06E	4	14.000	0	0.438	0.438	0.000	0.000	0.000	1.50	90	0.00	A234/WPBWPB/	0.00	0.00	0.00	665	400	-10	156	0.000	0.000	3.12600	0.00000	0.00000
CD-01.1B-07E	4	14.000	0	0.438	0.438	0.000	0.000	0.000	1.50	90	0.00	A234/WPBWPB/	0.00	0.00	0.00	665	400	-10	156	0.000	0.000	3.12600	0.00000	0.00000
CD-01.1B-08P	54	14.000	0	0.438	0.438	0.000	0.000	0.000	0.00	180	0.00	A106/BB/	0.00	0.00	0.00	665	400	-10	156	0.000	0.000	3.12600	0.00000	0.00000
CD-01.1B-09E	2	14.000	0	0.438	0.438	0.000	0.000	0.000	1.50	90	0.00	A234/WPBWPB/	0.00	0.00	0.00	665	400	-10	156	0.000	0.000	3.12600	0.00000	0.00000
CD-01.1B-10P	52	14.000	0	0.438	0.438	0.000	0.000	0.000	0.00	90	0.00	A106/BB/	0.00	0.00	0.00	665	400	-10	156	0.000	0.000	3.12600	0.00000	0.00000
CD-01.1B-11E	4	14.000	0	0.438	0.438	0.000	0.000	0.000	1.50	90	0.00	A234/WPBWPB/	0.00	0.00	0.00	665	400	-10	156	0.000	0.000	3.12600	0.00000	0.00000
CD-01.1B-12P	54	14.000	0	0.438	0.438	0.000	0.000	0.000	0.00	30	0.00	A106/BB/	0.00	0.00	0.00	665	400	-10	156	0.000	0.000	3.12600	0.00000	0.00000
CD-01.1B-13N	30	14.000	0	0.438	0.438	0.000	0.000	0.000	0.00	90	0.00	A106/BB/	0.00	0.00	0.00	665	400	-10	156	0.000	0.000	3.12600	0.00000	0.00000
Line Name : CD-01.1C FWH 31C to FWH 32C																								
CD-01.1C-01N	31	14.000	0	0.438	0.438	0.000	0.000	0.000	0.00	90	0.00	A106/BB/	0.00	0.00	0.00	665	400	-10	156	0.000	0.000	3.12600	0.00000	0.00000
CD-01.1C-02P	61	14.000	0	0.438	0.438	0.000	0.000	0.000	0.00	30	0.00	A106/BB/	0.00	0.00	0.00	665	400	-10	156	0.000	0.000	3.12600	0.00000	0.00000
CD-01.1C-03E	2	14.000	0	0.438	0.438	0.000	0.000	0.000	1.50	90	0.00	A234/WPBWPB/	0.00	0.00	0.00	665	400	-10	156	0.000	0.000	3.12600	0.00000	0.00000
CD-01.1C-04P	52	14.000	0	0.438	0.438	0.000	0.000	0.000	0.00	90	0.00	A106/BB/	0.00	0.00	0.00	665	400	-10	156	0.000	0.000	3.12600	0.00000	0.00000

Component Name	Geom Code	Pipe Size OD (in)	Sch.	Tnom (in)	Tinit (in)	Tcrit (in)	Br/Small End OD (in)	Br/Small Tnom (in)	R / D Ratio	Orient Angle (Deg.)	Pipe Length (in)	Spec/Type/ Class	Material Cr. (%)	Cu. (%)	Mo. (%)	Design Press. (psig)	Design Temp. (Deg. F)	Op. Press. (psig)	Op. Temp. (Deg. F)	Op. Enth. (Btu/lbm)	Op. Qual.	Flow Rate U/S Mn. (Mlbm/hr)	D/S Mn. (Mlbm/hr)	Br.
CD-01.1C-05E	2	14.000	0	0.438	0.438	0.000	0.000	0.000	1.50	90	0.00	A234/WPBWPB/	0.00	0.00	0.00	665	400	-10	156	0.000	0.000	3.12600	0.00000	0.00000
CD-01.1C-06E	4	14.000	0	0.438	0.438	0.000	0.000	0.000	1.50	90	0.00	A234/WPBWPB/	0.00	0.00	0.00	665	400	-10	156	0.000	0.000	3.12600	0.00000	0.00000
CD-01.1C-07E	4	14.000	0	0.438	0.438	0.000	0.000	0.000	1.50	90	0.00	A234/WPBWPB/	0.00	0.00	0.00	665	400	-10	156	0.000	0.000	3.12600	0.00000	0.00000
CD-01.1C-08P	54	14.000	0	0.438	0.438	0.000	0.000	0.000	0.00	180	0.00	A106/BB/	0.00	0.00	0.00	665	400	-10	156	0.000	0.000	3.12600	0.00000	0.00000
CD-01.1C-09E	2	14.000	0	0.438	0.438	0.000	0.000	0.000	1.50	90	0.00	A234/WPBWPB/	0.00	0.00	0.00	665	400	-10	156	0.000	0.000	3.12600	0.00000	0.00000
CD-01.1C-10P	52	14.000	0	0.438	0.438	0.000	0.000	0.000	0.00	90	0.00	A106/BB/	0.00	0.00	0.00	665	400	-10	156	0.000	0.000	3.12600	0.00000	0.00000
CD-01.1C-11E	4	14.000	0	0.438	0.438	0.000	0.000	0.000	1.50	90	0.00	A234/WPBWPB/	0.00	0.00	0.00	665	400	-10	156	0.000	0.000	3.12600	0.00000	0.00000
CD-01.1C-12P	54	14.000	0	0.438	0.438	0.000	0.000	0.000	0.00	30	0.00	A106/BB/	0.00	0.00	0.00	665	400	-10	156	0.000	0.000	3.12600	0.00000	0.00000
CD-01.1C-13N	30	14.000	0	0.438	0.438	0.000	0.000	0.000	0.00	90	0.00	A106/BB/	0.00	0.00	0.00	665	400	-10	156	0.000	0.000	3.12600	0.00000	0.00000
Line Name : CD-02.11 SGBD HX3 to FWH HDR																								
CD-02.11-01N	31	8.625	40	0.322	0.812	0.000	0.000	0.000	0.00	90	0.00	A106/BB/	0.00	0.00	0.00	665	400	-5	272	0.000	0.000	0.50000	0.00000	0.00000
CD-02.11-02P	61	8.625	0	0.322	0.322	0.000	0.000	0.000	0.00	0	0.00	A106/BB/	0.00	0.00	0.00	665	400	-5	272	0.000	0.000	0.50000	0.00000	0.00000
CD-02.11-03E	2	8.625	0	0.322	0.322	0.000	0.000	0.000	1.50	90	0.00	A234/WPBWPB/	0.00	0.00	0.00	665	400	-5	272	0.000	0.000	0.50000	0.00000	0.00000
CD-02.11-04P	52	8.625	0	0.322	0.322	0.000	0.000	0.000	0.00	90	0.00	A106/BB/	0.00	0.00	0.00	665	400	-5	272	0.000	0.000	0.50000	0.00000	0.00000
CD-02.11-05E	1	8.625	0	0.322	0.322	0.000	0.000	0.000	1.50	90	0.00	A234/WPBWPB/	0.00	0.00	0.00	665	400	-5	272	0.000	0.000	0.50000	0.00000	0.00000
CD-02.11-06P	51	8.625	0	0.322	0.322	0.000	0.000	0.000	0.00	90	0.00	A106/BB/	0.00	0.00	0.00	665	400	-5	272	0.000	0.000	0.50000	0.00000	0.00000
CD-02.11-07E	2	8.625	0	0.322	0.322	0.000	0.000	0.000	1.50	90	0.00	A234/WPBWPB/	0.00	0.00	0.00	665	400	-5	272	0.000	0.000	0.50000	0.00000	0.00000
CD-02.11-08P	52	8.625	0	0.322	0.322	0.000	0.000	0.000	0.00	90	0.00	A106/BB/	0.00	0.00	0.00	665	400	-5	272	0.000	0.000	0.50000	0.00000	0.00000
CD-02.11-09P	9	8.625	0	0.322	0.322	0.000	0.000	0.000	0.00	90	0.00	A106/BB/	0.00	0.00	0.00	665	400	-5	272	0.000	0.000	0.50000	0.00000	0.00000
CD-02.11-10E	2	8.625	0	0.322	0.322	0.000	0.000	0.000	1.50	90	0.00	A234/WPBWPB/	0.00	0.00	0.00	665	400	-5	272	0.000	0.000	0.50000	0.00000	0.00000
CD-02.11-11P	52	8.625	0	0.322	0.322	0.000	0.000	0.000	0.00	90	0.00	A106/BB/	0.00	0.00	0.00	665	400	-5	272	0.000	0.000	0.50000	0.00000	0.00000
CD-02.11-12E	2	8.625	0	0.322	0.322	0.000	0.000	0.000	1.50	90	0.00	A234/WPBWPB/	0.00	0.00	0.00	665	400	-5	272	0.000	0.000	0.50000	0.00000	0.00000
CD-02.12-01P	60	18.000	0	0.562	0.562	0.000	0.000	0.000	0.00	90	0.00	A106/BB/	0.00	0.00	0.00	665	400	-5	272	0.000	0.000	0.50000	0.00000	0.00000
CD-02.12-02E	2	18.000	0	0.562	0.562	0.000	0.000	0.000	1.50	90	0.00	A234/WPBWPB/	0.00	0.00	0.00	665	400	-5	272	0.000	0.000	0.50000	0.00000	0.00000
CD-02.12-03P	52	18.000	0	0.562	0.562	0.000	0.000	0.000	0.00	90	0.00	A106/BB/	0.00	0.00	0.00	665	400	-5	272	0.000	0.000	0.50000	0.00000	0.00000
CD-02.12-04V	22	18.000	0	0.562	0.562	0.000	0.000	0.000	0.00	90	0.00	A216/WCBWCB/	0.00	0.00	0.00	665	400	-5	272	0.000	0.000	0.50000	0.00000	0.00000
CD-02.12-05P	58	18.000	0	0.562	0.562	0.000	0.000	0.000	0.00	90	0.00	A106/BB/	0.00	0.00	0.00	665	400	-5	272	0.000	0.000	0.50000	0.00000	0.00000
CD-02.12-06E	2	18.000	0	0.562	0.562	0.000	0.000	0.000	1.50	90	0.00	A234/WPBWPB/	0.00	0.00	0.00	665	400	-5	272	0.000	0.000	0.50000	0.00000	0.00000
CD-02.12-07P	52	18.000	0	0.562	0.562	0.000	0.000	0.000	0.00	76	0.00	A106/BB/	0.00	0.00	0.00	665	400	-5	272	0.000	0.000	0.50000	0.00000	0.00000
CD-02.12-08E	2	18.000	0	0.562	0.562	0.000	0.000	0.000	1.50	90	0.00	A234/WPBWPB/	0.00	0.00	0.00	665	400	-5	272	0.000	0.000	0.50000	0.00000	0.00000
CD-02.12-09P	52	18.000	0	0.562	0.562	0.000	0.000	0.000	0.00	90	0.00	A106/BB/	0.00	0.00	0.00	665	400	-5	272	0.000	0.000	0.50000	0.00000	0.00000
CD-02.12-10E	2	18.000	0	0.562	0.562	0.000	0.000	0.000	1.50	90	0.00	A234/WPBWPB/	0.00	0.00	0.00	665	400	-5	272	0.000	0.000	0.50000	0.00000	0.00000
CD-02.12-11P	52	18.000	0	0.562	0.562	0.000	0.000	0.000	0.00	90	0.00	A106/BB/	0.00	0.00	0.00	665	400	-5	272	0.000	0.000	0.50000	0.00000	0.00000
Line Name : CD-02.1A FWH 32A to HDR																								
CD-02.1A-01N	31	14.000	0	0.438	0.438	0.000	0.000	0.000	0.00	90	0.00	A106/BB/	0.00	0.00	0.00	665	400	-5	191	0.000	0.000	3.12600	0.00000	0.00000
CD-02.1A-02P	61	14.000	0	0.438	0.438	0.000	0.000	0.000	0.00	30	0.00	A106/BB/	0.00	0.00	0.00	665	400	-5	191	0.000	0.000	3.12600	0.00000	0.00000
CD-02.1A-03E	2	14.000	0	0.438	0.438	0.000	0.000	0.000	1.50	90	0.00	A234/WPBWPB/	0.00	0.00	0.00	665	400	-5	191	0.000	0.000	3.12600	0.00000	0.00000
CD-02.1A-04P	52	14.000	0	0.438	0.438	0.000	0.000	0.000	0.00	90	0.00	A106/BB/	0.00	0.00	0.00	665	400	-5	191	0.000	0.000	3.12600	0.00000	0.00000
CD-02.1A-05V	22	14.000	0	0.438	0.438	0.000	0.000	0.000	0.00	90	0.00	A216/WCBWCB/	0.00	0.00	0.00	665	400	-5	191	0.000	0.000	3.12600	0.00000	0.00000
CD-02.1A-06E	4	14.000	0	0.438	0.438	0.000	0.000	0.000	1.50	90	0.00	A234/WPBWPB/	0.00	0.00	0.00	665	400	-5	191	0.000	0.000	3.12600	0.00000	0.00000
CD-02.1A-07E	4	14.000	0	0.438	0.438	0.000	0.000	0.000	1.50	90	0.00	A234/WPBWPB/	0.00	0.00	0.00	665	400	-5	191	0.000	0.000	3.12600	0.00000	0.00000
CD-02.1A-08P	54	14.000	0	0.438	0.438	0.000	0.000	0.000	0.00	90	0.00	A106/BB/	0.00	0.00	0.00	665	400	-5	191	0.000	0.000	3.12600	0.00000	0.00000
CD-02.1A-09E	2	14.000	0	0.438	0.438	0.000	0.000	0.000	1.50	90	0.00	A234/WPBWPB/	0.00	0.00	0.00	665	400	-5	191	0.000	0.000	3.12600	0.00000	0.00000
CD-02.1A-10P	52	14.000	0	0.438	0.438	0.000	0.000	0.000	0.00	16	0.00	A106/BB/	0.00	0.00	0.00	665	400	-5	191	0.000	0.000	3.12600	0.00000	0.00000
CD-02.1A-11E	4	14.000	0	0.438	0.438	0.000	0.000	0.000	1.50	90	0.00	A234/WPBWPB/	0.00	0.00	0.00	665	400	-5	191	0.000	0.000	3.12600	0.00000	0.00000
CD-02.1A-12P	54	14.000	0	0.438	0.438	0.000	0.000	0.000	0.00	90	0.00	A106/BB/	0.00	0.00	0.00	665	400	-5	191	0.000	0.000	3.12600	0.00000	0.00000
CD-02.1A-14P	9	14.000	0	0.438	0.438	0.000	0.000	0.000	0.00	90	0.00	A106/BB/	0.00	0.00	0.00	665	400	-5	191	0.000	0.000	3.12600	0.00000	0.00000
CD-02.1A-13R	18	20.000	40	0.594	0.000	0.000	14.000	0.438	0.00	90	0.00	A234/WPBWPB/	0.00	0.00	0.00	665	400	-5	191	0.000	0.000	3.12600	3.12600	0.00000
Line Name : CD-02.2 FWH 32 OUT HDR																								
CD-02.1B-11T	12	20.000	40	0.594	0.624	0.000	14.000	0.438	0.00	90	0.00	A106/BB/	0.00	0.00	0.00	665	400	-5	191	0.000	0.000	3.12600	6.25200	3.12600
Line Name : CD-02.1B FWH 32B to HDR																								
CD-02.1B-01N	31	14.000	0	0.438	0.438	0.000	0.000	0.000	0.00	90	0.00	A106/BB/	0.00	0.00	0.00	665	400	-5	191	0.000	0.000	3.12600	0.00000	0.00000
CD-02.1B-02P	61	14.000	0	0.438	0.438	0.000	0.000	0.000	0.00	30	0.00	A106/BB/	0.00	0.00	0.00	665	400	-5	191	0.000	0.000	3.12600	0.00000	0.00000
CD-02.1B-03E	2	14.000	0	0.438	0.438	0.000	0.000	0.000	1.50	90	0.00	A234/WPBWPB/	0.00	0.00	0.00	665	400	-5	191	0.000	0.000	3.12600	0.00000	0.00000

Component Name	Geom Code	Pipe Size OD (in)	Sch.	Tnom (in)	Tinit (in)	Tcrit (in)	Br/Small End OD (in)	Br/Small Tnom (in)	R / D Ratio	Orient Angle (Deg.)	Pipe Length (in)	Spec/Type/ Class	Material Cr. (%)	Cu. (%)	Mo. (%)	Design Press. (psig)	Design Temp. (Deg. F)	Op. Press. (psig)	Op. Temp. (Deg. F)	Op. Enth. (Btu/lbm)	Op. Qual.	Flow Rate U/S Mn. (Mlbm/hr)	D/S Mn. (Mlbm/hr)	Br.
CD-02.1B-04P	52	14.000	0	0.438	0.438	0.000	0.000	0.000	0.00	90	0.00	A106/BB/	0.00	0.00	0.00	665	400	-5	191	0.000	0.000	3.12600	0.00000	0.00000
CD-02.1B-05E	2	14.000	0	0.438	0.438	0.000	0.000	0.000	1.50	90	0.00	A234/WPBWPB/	0.00	0.00	0.00	665	400	-5	191	0.000	0.000	3.12600	0.00000	0.00000
CD-02.1B-06E	4	14.000	0	0.438	0.438	0.000	0.000	0.000	1.50	90	0.00	A234/WPBWPB/	0.00	0.00	0.00	665	400	-5	191	0.000	0.000	3.12600	0.00000	0.00000
CD-02.1B-07V	22	14.000	0	0.438	0.438	0.000	0.000	0.000	0.00	90	0.00	A216/WCBWCB/	0.00	0.00	0.00	665	400	-5	191	0.000	0.000	3.12600	0.00000	0.00000
CD-02.1B-08P	58	14.000	0	0.438	0.438	0.000	0.000	0.000	0.00	90	0.00	A106/BB/	0.00	0.00	0.00	665	400	-5	191	0.000	0.000	3.12600	0.00000	0.00000
CD-02.1B-09E	2	14.000	0	0.438	0.438	0.000	0.000	0.000	1.50	90	0.00	A234/WPBWPB/	0.00	0.00	0.00	665	400	-5	191	0.000	0.000	3.12600	0.00000	0.00000
CD-02.1B-10P	52	14.000	40	0.438	0.661	0.000	0.000	0.000	0.00	0	0.00	A106/BB/	0.00	0.00	0.00	665	400	-5	191	0.000	0.000	3.12600	0.00000	0.00000
Line Name : CD-02.1C FWH 32C to HDR																								
CD-02.1C-01N	31	14.000	0	0.438	0.438	0.000	0.000	0.000	0.00	90	0.00	A106/BB/	0.00	0.00	0.00	665	400	-5	191	0.000	0.000	3.12600	0.00000	0.00000
CD-02.1C-02P	61	14.000	0	0.438	0.438	0.000	0.000	0.000	0.00	30	0.00	A106/BB/	0.00	0.00	0.00	665	400	-5	191	0.000	0.000	3.12600	0.00000	0.00000
CD-02.1C-03E	2	14.000	0	0.438	0.438	0.000	0.000	0.000	1.50	90	0.00	A234/WPBWPB/	0.00	0.00	0.00	665	400	-5	191	0.000	0.000	3.12600	0.00000	0.00000
CD-02.1C-04P	52	14.000	0	0.438	0.438	0.000	0.000	0.000	0.00	90	0.00	A106/BB/	0.00	0.00	0.00	665	400	-5	191	0.000	0.000	3.12600	0.00000	0.00000
CD-02.1C-05E	2	14.000	0	0.438	0.438	0.000	0.000	0.000	1.50	90	0.00	A234/WPBWPB/	0.00	0.00	0.00	665	400	-5	191	0.000	0.000	3.12600	0.00000	0.00000
CD-02.1C-06E	4	14.000	0	0.438	0.438	0.000	0.000	0.000	1.50	90	0.00	A234/WPBWPB/	0.00	0.00	0.00	665	400	-5	191	0.000	0.000	3.12600	0.00000	0.00000
CD-02.1C-07P	54	14.000	0	0.438	0.438	0.000	0.000	0.000	0.00	90	0.00	A106/BB/	0.00	0.00	0.00	665	400	-5	191	0.000	0.000	3.12600	0.00000	0.00000
CD-02.1C-08V	22	14.000	0	0.438	0.438	0.000	0.000	0.000	0.00	90	0.00	A216/WCBWCB/	0.00	0.00	0.00	665	400	-5	191	0.000	0.000	3.12600	0.00000	0.00000
CD-02.1C-09P	58	14.000	0	0.438	0.438	0.000	0.000	0.000	0.00	90	0.00	A106/BB/	0.00	0.00	0.00	665	400	-5	191	0.000	0.000	3.12600	0.00000	0.00000
CD-02.1C-10E	2	14.000	40	0.438	0.575	0.000	0.000	0.000	1.50	90	0.00	A234/WPBWPB/	0.00	0.00	0.00	665	400	-5	191	0.000	0.000	3.12600	0.00000	0.00000
CD-02.1C-11P	52	14.000	0	0.438	0.438	0.000	0.000	0.000	0.00	0	0.00	A106/BB/	0.00	0.00	0.00	665	400	-5	191	0.000	0.000	3.12600	0.00000	0.00000
Line Name : CD-02.2 FWH 32 OUT HDR																								
CD-02.2-01P	62	20.000	0	0.594	0.594	0.000	0.000	0.000	0.00	90	0.00	A106/BB/	0.00	0.00	0.00	665	400	-5	191	0.000	0.000	6.25200	0.00000	0.00000
CD-02.2-03P	9	20.000	0	0.594	0.594	0.000	0.000	0.000	0.00	90	0.00	A106/BB/	0.00	0.00	0.00	665	400	-5	191	0.000	0.000	6.25200	0.00000	0.00000
CD-02.2-02R	18	24.000	40	0.688	0.000	0.000	20.000	0.594	0.00	90	0.00	A234/WPBWPB/	0.00	0.00	0.00	665	400	-5	191	0.000	0.000	6.25200	6.25200	0.00000
Line Name : CD-02.3 FWH 32 OUT HDR																								
CD-02.1C-12T	12	24.000	40	0.688	0.692	0.000	14.000	0.438	0.00	90	0.00	A106/BB/	0.00	0.00	0.00	665	400	-5	191	0.000	0.000	6.25200	9.37800	3.12600
CD-02.3-01P	62	24.000	40	0.688	0.736	0.000	0.000	0.000	0.00	90	0.00	A106/BB/	0.00	0.00	0.00	665	400	-5	191	0.000	0.000	9.37800	0.00000	0.00000
CD-02.3-02T	15	24.000	0	0.688	0.688	0.000	12.000	0.406	0.00	90	0.00	A106/BB/	0.00	0.00	0.00	665	400	-5	191	0.000	0.000	9.37800	9.37800	0.00000
CD-02.3-03P	65	24.000	0	0.688	0.688	0.000	0.000	0.000	0.00	90	0.00	A106/BB/	0.00	0.00	0.00	665	400	-5	191	0.000	0.000	9.37800	0.00000	0.00000
CD-02.3-04E	2	24.000	0	0.688	0.688	0.000	0.000	0.000	1.00	90	0.00	A234/WPBWPB/	0.00	0.00	0.00	665	400	-5	191	0.000	0.000	9.37800	0.00000	0.00000
CD-02.3-05E	3	24.000	0	0.688	0.688	0.000	0.000	0.000	1.50	90	0.00	A234/WPBWPB/	0.00	0.00	0.00	665	400	-5	191	0.000	0.000	9.37800	0.00000	0.00000
CD-02.3-06P	53	24.000	0	0.688	0.688	0.000	0.000	0.000	0.00	180	0.00	A106/BB/	0.00	0.00	0.00	665	400	-5	191	0.000	0.000	9.37800	0.00000	0.00000
CD-02.3-07E	2	24.000	0	0.688	0.688	0.000	0.000	0.000	1.50	90	0.00	A234/WPBWPB/	0.00	0.00	0.00	665	400	-5	191	0.000	0.000	9.37800	0.00000	0.00000
CD-02.3-08P	52	24.000	0	0.688	0.688	0.000	0.000	0.000	0.00	90	0.00	A106/BB/	0.00	0.00	0.00	665	400	-5	191	0.000	0.000	9.37800	0.00000	0.00000
CD-02.3-09E	1	24.000	0	0.688	0.688	0.000	0.000	0.000	1.50	90	0.00	A234/WPBWPB/	0.00	0.00	0.00	665	400	-5	191	0.000	0.000	9.37800	0.00000	0.00000
CD-02.3-10P	51	24.000	0	0.688	0.688	0.000	0.000	0.000	0.00	90	0.00	A106/BB/	0.00	0.00	0.00	665	400	-5	191	0.000	0.000	9.37800	0.00000	0.00000
CD-02.3-16P	9	24.000	0	0.688	0.688	0.000	0.000	0.000	0.00	90	0.00	A106/BB/	0.00	0.00	0.00	665	400	-5	191	0.000	0.000	9.37800	0.00000	0.00000
CD-02.3-11E	2	24.000	0	0.688	0.688	0.000	0.000	0.000	1.50	90	0.00	A234/WPBWPB/	0.00	0.00	0.00	665	400	-5	191	0.000	0.000	9.37800	0.00000	0.00000
CD-02.3-12P	52	24.000	0	0.688	0.688	0.000	0.000	0.000	0.00	180	0.00	A106/BB/	0.00	0.00	0.00	665	400	-5	191	0.000	0.000	9.37800	0.00000	0.00000
CD-02.3-13E	4	24.000	0	0.688	0.688	0.000	0.000	0.000	1.50	90	0.00	A234/WPBWPB/	0.00	0.00	0.00	665	400	-5	191	0.000	0.000	9.37800	0.00000	0.00000
CD-02.3-14P	54	24.000	0	0.688	0.688	0.000	0.000	0.000	0.00	90	0.00	A106/BB/	0.00	0.00	0.00	665	400	-5	191	0.000	0.000	9.37800	0.00000	0.00000
CD-02.3-15T	14	24.000	0	0.688	0.688	0.000	18.000	0.500	0.00	90	0.00	A106/BB/	0.00	0.00	0.00	665	400	-5	191	0.000	0.000	9.37800	8.87800	0.50000
Line Name : CD-02.4 FWH 32 OUT HDR																								
CD-02.3-17P	62	24.000	0	0.688	0.688	0.000	0.000	0.000	0.00	90	0.00	A106/BB/	0.00	0.00	0.00	665	400	-5	191	0.000	0.000	8.87800	0.00000	0.00000
CD-02.4-01R	7	24.000	40	0.688	0.000	0.000	20.000	0.594	0.00	90	0.00	A234/WPBWPB/	0.00	0.00	0.00	665	400	-5	191	0.000	0.000	8.87800	8.87800	0.00000
CD-02.4-02V	23	20.000	0	0.594	0.594	0.000	0.000	0.000	0.00	90	0.00	A216/WCBWCB/	0.00	0.00	0.00	665	400	-5	191	0.000	0.000	8.87800	0.00000	0.00000
CD-02.4-03P	58	20.000	0	0.594	0.594	0.000	0.000	0.000	0.00	90	0.00	A106/BB/	0.00	0.00	0.00	665	400	-5	191	0.000	0.000	8.87800	0.00000	0.00000
CD-02.4-04E	19	24.000	40	0.688	0.864	0.000	20.000	0.594	1.50	90	0.00	A234/WPBWPB/	0.00	0.00	0.00	665	400	-5	191	0.000	0.000	8.87800	8.87800	0.00000
CD-02.5-01P	69	24.000	40	0.688	0.754	0.000	0.000	0.000	0.00	0	0.00	A106/BB/	0.00	0.00	0.00	665	400	-5	191	0.000	0.000	8.87800	0.00000	0.00000
CD-02.5-02E	2	24.000	40	0.688	0.994	0.000	0.000	0.000	1.00	90	0.00	A234/WPBWPB/	0.00	0.00	0.00	665	400	-5	191	0.000	0.000	8.87800	0.00000	0.00000
Line Name : CD-02.5 FWH 32 OUT HDR																								
CD-02.5-03T	12	24.000	0	0.688	0.688	0.000	18.000	0.562	0.00	90	0.00	A106/BB/	0.00	0.00	0.00	665	400	-5	196	0.000	0.000	8.87800	9.37800	0.50000
CD-02.5-04T	14	24.000	40	0.688	0.730	0.000	14.000	0.438	0.00	90	0.00	A106/BB/	0.00	0.00	0.00	665	400	-5	196	0.000	0.000	9.37800	6.25200	3.12600

Component Name	Geom Code	Pipe Size OD (in)	Sch.	Tnom (in)	Tinit (in)	Tcrit (in)	Br/Small End OD (in)	Br/Small Tnom (in)	R / D Ratio	Orient Angle (Deg.)	Pipe Length (in)	Spec/Type/ Class	Material Cr. (%)	Cu. (%)	Mo. (%)	Design Press. (psig)	Design Temp. (Deg. F)	Op. Press. (psig)	Op. Temp. (Deg. F)	Op. Enth. (Btu/lbm)	Op. Qual.	Flow Rate U/S Mn. (Mlbm/hr)	D/S Mn. (Mlbm/hr)	Br.
Line Name : CD-02.6 FWH 32 OUT HDR																								
CD-02.6-01T	15	24.000	40	0.688	0.693	0.000	12.000	0.406	0.00	90	0.00	A106/BB/	0.00	0.00	0.00	665	400	-5	196	0.000	0.000	6.25200	6.25200	0.00000
CD-02.6-02P	65	24.000	40	0.688	0.693	0.000	0.000	0.000	0.00	90	0.00	A106/BB/	0.00	0.00	0.00	665	400	-5	196	0.000	0.000	6.25200	0.00000	0.00000
CD-02.6-03T	14	24.000	40	0.688	0.694	0.000	14.000	0.438	0.00	90	0.00	A106/BB/	0.00	0.00	0.00	665	400	-5	196	0.000	0.000	6.25200	3.12600	3.12600
Line Name : CD-02.8A HDR to FWH 33A																								
CD-02.7-01P	64	24.000	40	0.688	0.675	0.000	0.000	0.000	0.00	90	0.00	A106/BB/	0.00	0.00	0.00	665	400	-5	196	0.000	0.000	3.12600	0.00000	0.00000
CD-02.7-02T	14	24.000	0	0.688	0.688	0.000	14.000	0.438	0.00	90	0.00	A106/BB/	0.00	0.00	0.00	665	400	-5	196	0.000	0.000	3.12600	0.00000	3.12600
CD-02.8A-01P	64	14.000	0	0.438	0.438	0.000	0.000	0.000	0.00	0	0.00	A106/BB/	0.00	0.00	0.00	665	400	-5	196	0.000	0.000	3.12600	0.00000	0.00000
CD-02.8A-02E	4	14.000	0	0.438	0.438	0.000	0.000	0.000	1.00	90	0.00	A234/WPBWPB/	0.00	0.00	0.00	665	400	-5	196	0.000	0.000	3.12600	0.00000	0.00000
CD-02.8A-03P	54	14.000	0	0.438	0.438	0.000	0.000	0.000	0.00	90	0.00	A106/BB/	0.00	0.00	0.00	665	400	-5	196	0.000	0.000	3.12600	0.00000	0.00000
CD-02.8A-04V	22	14.000	0	0.438	0.438	0.000	0.000	0.000	0.00	90	0.00	A216/WCBWCB/	0.00	0.00	0.00	665	400	-5	196	0.000	0.000	3.12600	0.00000	0.00000
CD-02.8A-05E	4	14.000	0	0.438	0.438	0.000	0.000	0.000	1.50	90	0.00	A234/WPBWPB/	0.00	0.00	0.00	665	400	-5	196	0.000	0.000	3.12600	0.00000	0.00000
CD-02.8A-06P	54	14.000	0	0.438	0.438	0.000	0.000	0.000	0.00	0	0.00	A106/BB/	0.00	0.00	0.00	665	400	-5	196	0.000	0.000	3.12600	0.00000	0.00000
CD-02.8A-07E	4	14.000	0	0.438	0.438	0.000	0.000	0.000	1.50	90	0.00	A234/WPBWPB/	0.00	0.00	0.00	665	400	-5	196	0.000	0.000	3.12600	0.00000	0.00000
CD-02.8A-08N	30	14.000	0	0.438	0.438	0.000	0.000	0.000	0.00	90	0.00	A106/BB/	0.00	0.00	0.00	665	400	-5	196	0.000	0.000	3.12600	0.00000	0.00000
Line Name : CD-02.8B HDR to FWH 33B																								
CD-02.8B-01P	64	14.000	40	0.438	0.445	0.000	0.000	0.000	0.00	0	0.00	A106/BB/	0.00	0.00	0.00	665	400	-5	196	0.000	0.000	3.12600	0.00000	0.00000
CD-02.8B-02E	4	14.000	40	0.438	0.000	0.000	0.000	0.000	1.00	90	0.00	A234/WPBWPB/	0.00	0.00	0.00	665	400	-5	196	0.000	0.000	3.12600	0.00000	0.00000
CD-02.8B-03P	54	14.000	0	0.438	0.438	0.000	0.000	0.000	0.00	90	0.00	A106/BB/	0.00	0.00	0.00	665	400	-5	196	0.000	0.000	3.12600	0.00000	0.00000
CD-02.8B-04V	22	14.000	0	0.438	0.438	0.000	0.000	0.000	0.00	90	0.00	A216/WCBWCB/	0.00	0.00	0.00	665	400	-5	196	0.000	0.000	3.12600	0.00000	0.00000
CD-02.8B-05E	4	14.000	0	0.438	0.438	0.000	0.000	0.000	1.50	90	0.00	A234/WPBWPB/	0.00	0.00	0.00	665	400	-5	196	0.000	0.000	3.12600	0.00000	0.00000
CD-02.8B-06P	54	14.000	0	0.438	0.438	0.000	0.000	0.000	0.00	0	0.00	A106/BB/	0.00	0.00	0.00	665	400	-5	196	0.000	0.000	3.12600	0.00000	0.00000
CD-02.8B-07E	4	14.000	0	0.438	0.438	0.000	0.000	0.000	1.50	90	0.00	A234/WPBWPB/	0.00	0.00	0.00	665	400	-5	196	0.000	0.000	3.12600	0.00000	0.00000
CD-02.8B-08N	30	14.000	0	0.438	0.438	0.000	0.000	0.000	0.00	90	0.00	A106/BB/	0.00	0.00	0.00	665	400	-5	196	0.000	0.000	3.12600	0.00000	0.00000
Line Name : CD-02.8C HDR to FWH 33C																								
CD-02.8C-01P	64	14.000	40	0.438	0.629	0.000	0.000	0.000	0.00	0	0.00	A106/BB/	0.00	0.00	0.00	665	400	-5	196	0.000	0.000	3.12600	0.00000	0.00000
CD-02.8C-02E	4	14.000	40	0.438	0.000	0.000	0.000	0.000	1.00	90	0.00	A234/WPBWPB/	0.00	0.00	0.00	665	400	-5	196	0.000	0.000	3.12600	0.00000	0.00000
CD-02.8C-03P	54	14.000	40	0.438	0.594	0.000	0.000	0.000	0.00	90	0.00	A106/BB/	0.00	0.00	0.00	665	400	-5	196	0.000	0.000	3.12600	0.00000	0.00000
CD-02.8C-04V	22	14.000	0	0.438	0.438	0.000	0.000	0.000	0.00	90	0.00	A216/WCBWCB/	0.00	0.00	0.00	665	400	-5	196	0.000	0.000	3.12600	0.00000	0.00000
CD-02.8C-05E	4	14.000	0	0.438	0.438	0.000	0.000	0.000	1.50	90	0.00	A234/WPBWPB/	0.00	0.00	0.00	665	400	-5	196	0.000	0.000	3.12600	0.00000	0.00000
CD-02.8C-06P	54	14.000	0	0.438	0.438	0.000	0.000	0.000	0.00	0	0.00	A106/BB/	0.00	0.00	0.00	665	400	-5	196	0.000	0.000	3.12600	0.00000	0.00000
CD-02.8C-07E	4	14.000	0	0.438	0.438	0.000	0.000	0.000	1.50	90	0.00	A234/WPBWPB/	0.00	0.00	0.00	665	400	-5	196	0.000	0.000	3.12600	0.00000	0.00000
CD-02.8C-08N	30	14.000	0	0.438	0.438	0.000	0.000	0.000	0.00	90	0.00	A106/BB/	0.00	0.00	0.00	665	400	-5	196	0.000	0.000	3.12600	0.00000	0.00000
Line Name : CD-02.9 FWH HDR to SGBD HX3																								
CD-02.9-01P	63	18.000	0	0.562	0.562	0.000	0.000	0.000	0.00	0	0.00	A106/BB/	0.00	0.00	0.00	665	400	-5	191	0.000	0.000	0.50000	0.00000	0.00000
CD-02.9-02E	4	18.000	0	0.562	0.562	0.000	0.000	0.000	1.00	90	0.00	A234/WPBWPB/	0.00	0.00	0.00	665	400	-5	191	0.000	0.000	0.50000	0.00000	0.00000
CD-02.9-03P	54	18.000	0	0.562	0.562	0.000	0.000	0.000	0.00	90	0.00	A106/BB/	0.00	0.00	0.00	665	400	-5	191	0.000	0.000	0.50000	0.00000	0.00000
CD-02.9-04V	22	18.000	0	0.562	0.562	0.000	0.000	0.000	0.00	90	0.00	A216/WCBWCB/	0.00	0.00	0.00	665	400	-5	191	0.000	0.000	0.50000	0.00000	0.00000
CD-02.9-05P	58	18.000	0	0.562	0.562	0.000	0.000	0.000	0.00	90	0.00	A106/BB/	0.00	0.00	0.00	665	400	-5	191	0.000	0.000	0.50000	0.00000	0.00000
CD-02.9-06E	2	18.000	0	0.562	0.562	0.000	0.000	0.000	1.00	90	0.00	A234/WPBWPB/	0.00	0.00	0.00	665	400	-5	191	0.000	0.000	0.50000	0.00000	0.00000
CD-02.9-07P	52	18.000	0	0.562	0.562	0.000	0.000	0.000	0.00	180	0.00	A106/BB/	0.00	0.00	0.00	665	400	-5	191	0.000	0.000	0.50000	0.00000	0.00000
CD-02.9-08E	4	18.000	0	0.562	0.562	0.000	0.000	0.000	1.50	90	0.00	A234/WPBWPB/	0.00	0.00	0.00	665	400	-5	191	0.000	0.000	0.50000	0.00000	0.00000
CD-02.9-09P	54	18.000	0	0.562	0.562	0.000	0.000	0.000	0.00	90	0.00	A106/BB/	0.00	0.00	0.00	665	400	-5	191	0.000	0.000	0.50000	0.00000	0.00000
CD-02.9-10P	9	18.000	0	0.562	0.562	0.000	0.000	0.000	0.00	90	0.00	A106/BB/	0.00	0.00	0.00	665	400	-5	191	0.000	0.000	0.50000	0.00000	0.00000
CD-02.9-11E	2	18.000	0	0.562	0.562	0.000	0.000	0.000	1.50	90	0.00	A234/WPBWPB/	0.00	0.00	0.00	665	400	-5	191	0.000	0.000	0.50000	0.00000	0.00000
CD-02.9-12P	52	18.000	0	0.562	0.562	0.000	0.000	0.000	0.00	180	0.00	A106/BB/	0.00	0.00	0.00	665	400	-5	191	0.000	0.000	0.50000	0.00000	0.00000
CD-02.9-13E	2	18.000	0	0.562	0.562	0.000	0.000	0.000	1.50	90	0.00	A234/WPBWPB/	0.00	0.00	0.00	665	400	-5	191	0.000	0.000	0.50000	0.00000	0.00000
CD-02.9-14P	52	18.000	0	0.562	0.562	0.000	0.000	0.000	0.00	90	0.00	A106/BB/	0.00	0.00	0.00	665	400	-5	191	0.000	0.000	0.50000	0.00000	0.00000

Component Name	Geom Code	Pipe Size OD (in)	Sch.	Tnom (in)	Tinit (in)	Tcrit (in)	Br/Small End OD (in)	Br/Small Tnom (in)	R / D Ratio	Orient Angle (Deg.)	Pipe Length (in)	Spec/Type/ Class	Material Cr. (%)	Cu. (%)	Mo. (%)	Design Press. (psig)	Design Temp. (Deg. F)	Op. Press. (psig)	Op. Temp. (Deg. F)	Op. Enth. (Btu/lbm)	Op. Qual.	Flow Rate U/S Mn. (Mlbm/hr)	D/S Mn. (Mlbm/hr)	Br.
CD-02.9-15P	9	18.000	0	0.562	0.562	0.000	0.000	0.000	0.00	90	0.00	A106/BB/	0.00	0.00	0.00	665	400	-5	191	0.000	0.000	0.50000	0.00000	0.00000
CD-02.9-16E	2	18.000	0	0.562	0.562	0.000	0.000	0.000	1.50	90	0.00	A234/WPBWPB/	0.00	0.00	0.00	665	400	-5	191	0.000	0.000	0.50000	0.00000	0.00000
CD-02.9-17T	14	18.000	0	0.562	0.562	0.000	8.000	0.322	0.00	90	0.00	A106/BB/	0.00	0.00	0.00	665	400	-5	191	0.000	0.000	0.50000	0.00000	0.50000
CD-02.10-01P	64	8.625	0	0.322	0.322	0.000	0.000	0.000	0.00	90	0.00	A106/BB/	0.00	0.00	0.00	665	400	-5	191	0.000	0.000	0.50000	0.00000	0.00000
CD-02.10-02O	6	8.625	0	0.322	0.322	0.000	0.000	0.000	0.00	90	0.00	A106/BB/	0.00	0.00	0.00	665	400	-5	191	0.000	0.000	0.50000	0.00000	0.00000
CD-02.10-03P	56	8.625	0	0.322	0.322	0.000	0.000	0.000	0.00	90	0.00	A106/BB/	0.00	0.00	0.00	665	400	-5	191	0.000	0.000	0.50000	0.00000	0.00000
CD-02.10-04E	2	8.625	0	0.322	0.322	0.000	0.000	0.000	1.50	90	0.00	A234/WPBWPB/	0.00	0.00	0.00	665	400	-5	191	0.000	0.000	0.50000	0.00000	0.00000
CD-02.10-05P	52	8.625	0	0.322	0.322	0.000	0.000	0.000	0.00	90	0.00	A106/BB/	0.00	0.00	0.00	665	400	-5	191	0.000	0.000	0.50000	0.00000	0.00000
CD-02.10-06E	2	8.625	0	0.322	0.322	0.000	0.000	0.000	1.50	90	0.00	A234/WPBWPB/	0.00	0.00	0.00	665	400	-5	191	0.000	0.000	0.50000	0.00000	0.00000
CD-02.10-07P	52	8.625	0	0.322	0.322	0.000	0.000	0.000	0.00	180	0.00	A106/BB/	0.00	0.00	0.00	665	400	-5	191	0.000	0.000	0.50000	0.00000	0.00000
CD-02.10-08E	2	8.625	0	0.322	0.322	0.000	0.000	0.000	1.50	90	0.00	A234/WPBWPB/	0.00	0.00	0.00	665	400	-5	191	0.000	0.000	0.50000	0.00000	0.00000
CD-02.10-09P	52	8.625	0	0.322	0.322	0.000	0.000	0.000	0.00	90	0.00	A106/BB/	0.00	0.00	0.00	665	400	-5	191	0.000	0.000	0.50000	0.00000	0.00000
CD-02.10-10E	4	8.625	0	0.322	0.322	0.000	0.000	0.000	1.50	90	0.00	A234/WPBWPB/	0.00	0.00	0.00	665	400	-5	191	0.000	0.000	0.50000	0.00000	0.00000
CD-02.10-11N	30	8.625	0	0.812	0.812	0.000	0.000	0.000	0.00	90	0.00	A106/BB/	0.00	0.00	0.00	665	400	-5	191	0.000	0.000	0.50000	0.00000	0.00000
Line Name : CD-03.1A FWH 33A to FWH 34A																								
CD-03.1A-01N	31	14.000	0	0.438	0.438	0.000	0.000	0.000	0.00	90	0.00	A106/BB/	0.00	0.00	0.00	665	400	12	244	0.000	0.000	3.12600	0.00000	0.00000
CD-03.1A-02E	4	14.000	0	0.438	0.438	0.000	0.000	0.000	1.50	90	0.00	A234/WPBWPB/	0.00	0.00	0.00	665	400	12	244	0.000	0.000	3.12600	0.00000	0.00000
CD-03.1A-03E	4	14.000	0	0.438	0.438	0.000	0.000	0.000	1.50	90	0.00	A234/WPBWPB/	0.00	0.00	0.00	665	400	12	244	0.000	0.000	3.12600	0.00000	0.00000
CD-03.1A-04P	54	14.000	0	0.438	0.438	0.000	0.000	0.000	0.00	180	0.00	A106/BB/	0.00	0.00	0.00	665	400	12	244	0.000	0.000	3.12600	0.00000	0.00000
CD-03.1A-05E	1	14.000	0	0.438	0.438	0.000	0.000	0.000	1.50	90	0.00	A234/WPBWPB/	0.00	0.00	0.00	665	400	12	244	0.000	0.000	3.12600	0.00000	0.00000
CD-03.1A-15P	51	14.000	0	0.438	0.438	0.000	0.000	0.000	0.00	135	0.00	A106/BB/	0.00	0.00	0.00	665	400	12	244	0.000	0.000	3.12600	0.00000	0.00000
CD-03.1A-06E	4	14.000	0	0.438	0.438	0.000	0.000	0.000	1.00	90	0.00	A234/WPBWPB/	0.00	0.00	0.00	665	400	12	244	0.000	0.000	3.12600	0.00000	0.00000
CD-03.1A-07P	54	14.000	0	0.438	0.438	0.000	0.000	0.000	0.00	90	0.00	A106/BB/	0.00	0.00	0.00	665	400	12	244	0.000	0.000	3.12600	0.00000	0.00000
CD-03.1A-14P	9	14.000	0	0.438	0.438	0.000	0.000	0.000	0.00	90	0.00	A106/BB/	0.00	0.00	0.00	665	400	12	244	0.000	0.000	3.12600	0.00000	0.00000
CD-03.1A-08E	1	14.000	0	0.438	0.438	0.000	0.000	0.000	1.50	90	0.00	A234/WPBWPB/	0.00	0.00	0.00	665	400	12	244	0.000	0.000	3.12600	0.00000	0.00000
CD-03.1A-09P	51	14.000	0	0.438	0.438	0.000	0.000	0.000	0.00	90	0.00	A106/BB/	0.00	0.00	0.00	665	400	12	244	0.000	0.000	3.12600	0.00000	0.00000
CD-03.1A-10E	4	14.000	0	0.438	0.438	0.000	0.000	0.000	1.00	90	0.00	A234/WPBWPB/	0.00	0.00	0.00	665	400	12	244	0.000	0.000	3.12600	0.00000	0.00000
CD-03.1A-11P	54	14.000	0	0.438	0.438	0.000	0.000	0.000	0.00	0	0.00	A106/BB/	0.00	0.00	0.00	665	400	12	244	0.000	0.000	3.12600	0.00000	0.00000
CD-03.1A-12E	1	14.000	0	0.438	0.438	0.000	0.000	0.000	1.50	90	0.00	A234/WPBWPB/	0.00	0.00	0.00	665	400	12	244	0.000	0.000	3.12600	0.00000	0.00000
CD-03.1A-13N	30	14.000	0	0.438	0.438	0.000	0.000	0.000	0.00	90	0.00	A106/BB/	0.00	0.00	0.00	665	400	12	244	0.000	0.000	3.12600	0.00000	0.00000
Line Name : CD-03.1B FWH 33B to FWH 34B																								
CD-03.1B-01N	31	14.000	0	0.438	0.438	0.000	0.000	0.000	0.00	90	0.00	A106/BB/	0.00	0.00	0.00	665	400	12	244	0.000	0.000	3.12600	0.00000	0.00000
CD-03.1B-02E	4	14.000	0	0.438	0.438	0.000	0.000	0.000	1.50	90	0.00	A234/WPBWPB/	0.00	0.00	0.00	665	400	12	244	0.000	0.000	3.12600	0.00000	0.00000
CD-03.1B-03E	4	14.000	0	0.438	0.438	0.000	0.000	0.000	1.50	90	0.00	A234/WPBWPB/	0.00	0.00	0.00	665	400	12	244	0.000	0.000	3.12600	0.00000	0.00000
CD-03.1B-04P	54	14.000	0	0.438	0.438	0.000	0.000	0.000	0.00	180	0.00	A106/BB/	0.00	0.00	0.00	665	400	12	244	0.000	0.000	3.12600	0.00000	0.00000
CD-03.1B-05E	2	14.000	40	0.438	0.547	0.000	0.000	0.000	1.50	90	0.00	A234/WPBWPB/	0.00	0.00	0.00	665	400	12	244	0.000	0.000	3.12600	0.00000	0.00000
CD-03.1B-06E	4	14.000	40	0.438	0.555	0.000	0.000	0.000	1.50	90	0.00	A234/WPBWPB/	0.00	0.00	0.00	665	400	12	244	0.000	0.000	3.12600	0.00000	0.00000
CD-03.1B-07P	54	14.000	40	0.438	0.477	0.000	0.000	0.000	0.00	90	0.00	A106/BB/	0.00	0.00	0.00	665	400	12	244	0.000	0.000	3.12600	0.00000	0.00000
CD-03.1B-12P	9	14.000	0	0.438	0.438	0.000	0.000	0.000	0.00	90	0.00	A106/BB/	0.00	0.00	0.00	665	400	12	244	0.000	0.000	3.12600	0.00000	0.00000
CD-03.1B-08E	2	14.000	0	0.438	0.438	0.000	0.000	0.000	1.50	90	0.00	A234/WPBWPB/	0.00	0.00	0.00	665	400	12	244	0.000	0.000	3.12600	0.00000	0.00000
CD-03.1B-09P	52	14.000	0	0.438	0.438	0.000	0.000	0.000	0.00	0	0.00	A106/BB/	0.00	0.00	0.00	665	400	12	244	0.000	0.000	3.12600	0.00000	0.00000
CD-03.1B-10E	1	14.000	0	0.438	0.438	0.000	0.000	0.000	1.50	90	0.00	A234/WPBWPB/	0.00	0.00	0.00	665	400	12	244	0.000	0.000	3.12600	0.00000	0.00000
CD-03.1B-11N	30	14.000	0	0.438	0.438	0.000	0.000	0.000	0.00	90	0.00	A106/BB/	0.00	0.00	0.00	665	400	12	244	0.000	0.000	3.12600	0.00000	0.00000
Line Name : CD-03.1C FWH 33C to FWH 34C																								
CD-03.1C-01N	31	14.000	0	0.438	0.438	0.000	0.000	0.000	0.00	90	0.00	A106/BB/	0.00	0.00	0.00	665	400	12	244	0.000	0.000	3.12600	0.00000	0.00000
CD-03.1C-02E	4	14.000	0	0.438	0.438	0.000	0.000	0.000	1.50	90	0.00	A234/WPBWPB/	0.00	0.00	0.00	665	400	12	244	0.000	0.000	3.12600	0.00000	0.00000
CD-03.1C-03E	4	14.000	0	0.438	0.438	0.000	0.000	0.000	1.50	90	0.00	A234/WPBWPB/	0.00	0.00	0.00	665	400	12	244	0.000	0.000	3.12600	0.00000	0.00000
CD-03.1C-04P	54	14.000	0	0.438	0.438	0.000	0.000	0.000	0.00	180	0.00	A106/BB/	0.00	0.00	0.00	665	400	12	244	0.000	0.000	3.12600	0.00000	0.00000
CD-03.1C-05E	2	14.000	0	0.438	0.438	0.000	0.000	0.000	1.50	90	0.00	A234/WPBWPB/	0.00	0.00	0.00	665	400	12	244	0.000	0.000	3.12600	0.00000	0.00000
CD-03.1C-06E	4	14.000	0	0.438	0.438	0.000	0.000	0.000	1.50	90	0.00	A234/WPBWPB/	0.00	0.00	0.00	665	400	12	244	0.000	0.000	3.12600	0.00000	0.00000
CD-03.1C-07P	54	14.000	0	0.438	0.438	0.000	0.000	0.000	0.00	90	0.00	A106/BB/	0.00	0.00	0.00	665	400	12	244	0.000	0.000	3.12600	0.00000	0.00000
CD-03.1C-12P	9	14.000	0	0.438	0.438	0.000	0.000	0.000	0.00	90	0.00	A106/BB/	0.00	0.00	0.00	665	400	12	244	0.000	0.000	3.12600	0.00000	0.00000
CD-03.1C-08E	2	14.000	0	0.438	0.438	0.000	0.000	0.000	1.50	90	0.00	A234/WPBWPB/	0.00	0.00	0.00	665	400	12	244	0.000	0.000	3.12600	0.00000	0.00000
CD-03.1C-09P	52	14.000	0	0.438	0.438	0.000	0.000	0.000	0.00	0	0.00	A106/BB/	0.00	0.00	0.00	665	400	12	244	0.000	0.000	3.12600	0.00000	0.00000
CD-03.1C-10E	1	14.000	0	0.438	0.438	0.000	0.000	0.000	1.50	90	0.00	A234/WPBWPB/	0.00	0.00	0.00	665	400	12	244	0.000	0.000	3.12600	0.00000	0.00000
CD-03.1C-11N	30	14.000	0	0.438	0.438	0.000	0.000	0.000	0.00	90	0.00	A106/BB/	0.00	0.00	0.00	665	400	12	244	0.000	0.000	3.12600	0.00000	0.00000

Component Name	Geom Code	Pipe Size OD (in)	Sch.	Tnom (in)	Tinit (in)	Tcrit (in)	Br/Small End OD (in)	Br/Small Tnom (in)	R / D Ratio	Orient Angle (Deg.)	Pipe Length (in)	Spec/Type/ Class	Material Cr. (%)	Cu. (%)	Mo. (%)	Design Press. (psig)	Design Temp. (Deg. F)	Op. Press. (psig)	Op. Temp. (Deg. F)	Op. Enth. (Btu/lbm)	Op. Qual.	Flow Rate U/S Mn. (Mlbm/hr)	D/S Mn. (Mlbm/hr)	Br.
Line Name : CD-04.1A FWH 34A to FWH 35A																								
CD-04.1A-01N	31	14.000	0	0.438	0.438	0.000	0.000	0.000	0.00	90	0.00	A106/BB/	0.00	0.00	0.00	665	400	46	294	0.000	0.000	3.12600	0.00000	0.00000
CD-04.1A-02E	4	14.000	0	0.438	0.438	0.000	0.000	0.000	1.50	90	0.00	A234/WPBWPB/	0.00	0.00	0.00	665	400	46	294	0.000	0.000	3.12600	0.00000	0.00000
CD-04.1A-03E	4	14.000	0	0.438	0.438	0.000	0.000	0.000	1.50	90	0.00	A234/WPBWPB/	0.00	0.00	0.00	665	400	46	294	0.000	0.000	3.12600	0.00000	0.00000
CD-04.1A-04P	54	14.000	0	0.438	0.438	0.000	0.000	0.000	0.00	180	0.00	A106/BB/	0.00	0.00	0.00	665	400	46	294	0.000	0.000	3.12600	0.00000	0.00000
CD-04.1A-05E	2	14.000	0	0.438	0.438	0.000	0.000	0.000	1.50	90	0.00	A234/WPBWPB/	0.00	0.00	0.00	665	400	46	294	0.000	0.000	3.12600	0.00000	0.00000
CD-04.1A-06P	52	14.000	0	0.438	0.438	0.000	0.000	0.000	0.00	90	0.00	A106/BB/	0.00	0.00	0.00	665	400	46	294	0.000	0.000	3.12600	0.00000	0.00000
CD-04.1A-07E	2	14.000	0	0.438	0.438	0.000	0.000	0.000	1.50	90	0.00	A234/WPBWPB/	0.00	0.00	0.00	665	400	46	294	0.000	0.000	3.12600	0.00000	0.00000
CD-04.1A-08P	52	14.000	0	0.438	0.438	0.000	0.000	0.000	0.00	180	0.00	A106/BB/	0.00	0.00	0.00	665	400	46	294	0.000	0.000	3.12600	0.00000	0.00000
CD-04.1A-09E	4	14.000	0	0.438	0.438	0.000	0.000	0.000	1.50	90	0.00	A234/WPBWPB/	0.00	0.00	0.00	665	400	46	294	0.000	0.000	3.12600	0.00000	0.00000
CD-04.1A-10P	54	14.000	0	0.438	0.438	0.000	0.000	0.000	0.00	90	0.00	A106/BB/	0.00	0.00	0.00	665	400	46	294	0.000	0.000	3.12600	0.00000	0.00000
CD-04.1A-15P	9	14.000	0	0.438	0.438	0.000	0.000	0.000	0.00	90	0.00	A106/BB/	0.00	0.00	0.00	665	400	46	294	0.000	0.000	3.12600	0.00000	0.00000
CD-04.1A-11E	2	14.000	0	0.438	0.438	0.000	0.000	0.000	1.50	90	0.00	A234/WPBWPB/	0.00	0.00	0.00	665	400	46	294	0.000	0.000	3.12600	0.00000	0.00000
CD-04.1A-12P	52	14.000	0	0.438	0.438	0.000	0.000	0.000	0.00	0	0.00	A106/BB/	0.00	0.00	0.00	665	400	46	294	0.000	0.000	3.12600	0.00000	0.00000
CD-04.1A-13E	1	14.000	0	0.438	0.438	0.000	0.000	0.000	1.50	90	0.00	A234/WPBWPB/	0.00	0.00	0.00	665	400	46	294	0.000	0.000	3.12600	0.00000	0.00000
CD-04.1A-14N	30	14.000	0	0.438	0.438	0.000	0.000	0.000	0.00	90	0.00	A106/BB/	0.00	0.00	0.00	665	400	46	294	0.000	0.000	3.12600	0.00000	0.00000
Line Name : CD-04.1B FWH 34B to FWH 35B																								
CD-04.1B-01N	31	14.000	0	0.438	0.438	0.000	0.000	0.000	0.00	90	0.00	A106/BB/	0.00	0.00	0.00	665	400	46	294	0.000	0.000	3.12600	0.00000	0.00000
CD-04.1B-02E	4	14.000	0	0.438	0.438	0.000	0.000	0.000	1.50	90	0.00	A234/WPBWPB/	0.00	0.00	0.00	665	400	46	294	0.000	0.000	3.12600	0.00000	0.00000
CD-04.1B-03E	4	14.000	0	0.438	0.438	0.000	0.000	0.000	1.50	90	0.00	A234/WPBWPB/	0.00	0.00	0.00	665	400	46	294	0.000	0.000	3.12600	0.00000	0.00000
CD-04.1B-04P	54	14.000	0	0.438	0.438	0.000	0.000	0.000	0.00	180	0.00	A106/BB/	0.00	0.00	0.00	665	400	46	294	0.000	0.000	3.12600	0.00000	0.00000
CD-04.1B-05E	2	14.000	0	0.438	0.438	0.000	0.000	0.000	1.50	90	0.00	A234/WPBWPB/	0.00	0.00	0.00	665	400	46	294	0.000	0.000	3.12600	0.00000	0.00000
CD-04.1B-06E	3	14.000	0	0.438	0.438	0.000	0.000	0.000	1.50	90	0.00	A234/WPBWPB/	0.00	0.00	0.00	665	400	46	294	0.000	0.000	3.12600	0.00000	0.00000
CD-04.1B-07P	53	14.000	0	0.438	0.438	0.000	0.000	0.000	0.00	90	0.00	A106/BB/	0.00	0.00	0.00	665	400	46	294	0.000	0.000	3.12600	0.00000	0.00000
CD-04.1B-08E	4	14.000	0	0.438	0.438	0.000	0.000	0.000	1.50	90	0.00	A234/WPBWPB/	0.00	0.00	0.00	665	400	46	294	0.000	0.000	3.12600	0.00000	0.00000
CD-04.1B-09P	54	14.000	0	0.438	0.438	0.000	0.000	0.000	0.00	180	0.00	A106/BB/	0.00	0.00	0.00	665	400	46	294	0.000	0.000	3.12600	0.00000	0.00000
CD-04.1B-10E	4	14.000	0	0.438	0.438	0.000	0.000	0.000	1.50	90	0.00	A234/WPBWPB/	0.00	0.00	0.00	665	400	46	294	0.000	0.000	3.12600	0.00000	0.00000
CD-04.1B-11P	54	14.000	0	0.438	0.438	0.000	0.000	0.000	0.00	90	0.00	A106/BB/	0.00	0.00	0.00	665	400	46	294	0.000	0.000	3.12600	0.00000	0.00000
CD-04.1B-17P	9	14.000	0	0.438	0.438	0.000	0.000	0.000	0.00	90	0.00	A106/BB/	0.00	0.00	0.00	665	400	46	294	0.000	0.000	3.12600	0.00000	0.00000
CD-04.1B-12E	1	14.000	0	0.438	0.438	0.000	0.000	0.000	1.50	90	0.00	A234/WPBWPB/	0.00	0.00	0.00	665	400	46	294	0.000	0.000	3.12600	0.00000	0.00000
CD-04.1B-13E	4	14.000	0	0.438	0.438	0.000	0.000	0.000	1.50	90	0.00	A234/WPBWPB/	0.00	0.00	0.00	665	400	46	294	0.000	0.000	3.12600	0.00000	0.00000
CD-04.1B-14P	54	14.000	0	0.438	0.438	0.000	0.000	0.000	0.00	0	0.00	A106/BB/	0.00	0.00	0.00	665	400	46	294	0.000	0.000	3.12600	0.00000	0.00000
CD-04.1B-15E	1	14.000	0	0.438	0.438	0.000	0.000	0.000	1.50	90	0.00	A234/WPBWPB/	0.00	0.00	0.00	665	400	46	294	0.000	0.000	3.12600	0.00000	0.00000
CD-04.1B-16N	30	14.000	0	0.438	0.438	0.000	0.000	0.000	0.00	90	0.00	A106/BB/	0.00	0.00	0.00	665	400	46	294	0.000	0.000	3.12600	0.00000	0.00000
Line Name : CD-04.1C FWH 34C to FWH 35C																								
CD-04.1C-01N	31	14.000	0	0.438	0.438	0.000	0.000	0.000	0.00	90	0.00	A106/BB/	0.00	0.00	0.00	665	400	46	294	0.000	0.000	3.12600	0.00000	0.00000
CD-04.1C-02E	4	14.000	40	0.438	0.594	0.000	0.000	0.000	1.50	90	0.00	A234/WPBWPB/	0.00	0.00	0.00	665	400	46	294	0.000	0.000	3.12600	0.00000	0.00000
CD-04.1C-03E	4	14.000	40	0.438	0.570	0.000	0.000	0.000	1.50	90	0.00	A234/WPBWPB/	0.00	0.00	0.00	665	400	46	294	0.000	0.000	3.12600	0.00000	0.00000
CD-04.1C-04P	54	14.000	0	0.438	0.438	0.000	0.000	0.000	0.00	180	0.00	A106/BB/	0.00	0.00	0.00	665	400	46	294	0.000	0.000	3.12600	0.00000	0.00000
CD-04.1C-05E	2	14.000	0	0.438	0.438	0.000	0.000	0.000	1.50	90	0.00	A234/WPBWPB/	0.00	0.00	0.00	665	400	46	294	0.000	0.000	3.12600	0.00000	0.00000
CD-04.1C-06P	52	14.000	0	0.438	0.438	0.000	0.000	0.000	0.00	90	0.00	A106/BB/	0.00	0.00	0.00	665	400	46	294	0.000	0.000	3.12600	0.00000	0.00000
CD-04.1C-07E	4	14.000	0	0.438	0.438	0.000	0.000	0.000	1.50	90	0.00	A234/WPBWPB/	0.00	0.00	0.00	665	400	46	294	0.000	0.000	3.12600	0.00000	0.00000
CD-04.1C-08E	4	14.000	0	0.438	0.438	0.000	0.000	0.000	1.50	90	0.00	A234/WPBWPB/	0.00	0.00	0.00	665	400	46	294	0.000	0.000	3.12600	0.00000	0.00000
CD-04.1C-09P	54	14.000	0	0.438	0.438	0.000	0.000	0.000	0.00	90	0.00	A106/BB/	0.00	0.00	0.00	665	400	46	294	0.000	0.000	3.12600	0.00000	0.00000
CD-04.1C-14P	9	14.000	0	0.438	0.438	0.000	0.000	0.000	0.00	90	0.00	A106/BB/	0.00	0.00	0.00	665	400	46	294	0.000	0.000	3.12600	0.00000	0.00000
CD-04.1C-10E	2	14.000	0	0.438	0.438	0.000	0.000	0.000	1.50	90	0.00	A234/WPBWPB/	0.00	0.00	0.00	665	400	46	294	0.000	0.000	3.12600	0.00000	0.00000
CD-04.1C-11P	52	14.000	0	0.438	0.438	0.000	0.000	0.000	0.00	0	0.00	A106/BB/	0.00	0.00	0.00	665	400	46	294	0.000	0.000	3.12600	0.00000	0.00000
CD-04.1C-12E	1	14.000	0	0.438	0.438	0.000	0.000	0.000	1.50	90	0.00	A234/WPBWPB/	0.00	0.00	0.00	665	400	46	294	0.000	0.000	3.12600	0.00000	0.00000
CD-04.1C-13N	30	14.000	0	0.438	0.438	0.000	0.000	0.000	0.00	90	0.00	A106/BB/	0.00	0.00	0.00	665	400	46	294	0.000	0.000	3.12600	0.00000	0.00000
Line Name : CD-05.1A FWH 35A to HDR																								
CD-05.1A-01N	31	14.000	0	0.438	0.438	0.000	0.000	0.000	0.00	90	0.00	A106/BB/	0.00	0.00	0.00	665	400	162	372	0.000	0.000	3.12600	0.00000	0.00000
CD-05.1A-02E	4	14.000	0	0.438	0.438	0.000	0.000	0.000	1.50	90	0.00	A234/WPBWPB/	0.00	0.00	0.00	665	400	162	372	0.000	0.000	3.12600	0.00000	0.00000
CD-05.1A-03E	4	14.000	0	0.438	0.438	0.000	0.000	0.000	1.50	90	0.00	A234/WPBWPB/	0.00	0.00	0.00	665	400	162	372	0.000	0.000	3.12600	0.00000	0.00000
CD-05.1A-04P	54	14.000	0	0.438	0.438	0.000	0.000	0.000	0.00	180	0.00	A106/BB/	0.00	0.00	0.00	665	400	162	372	0.000	0.000	3.12600	0.00000	0.00000
CD-05.1A-05V	22	14.000	0	0.438	0.438	0.000	0.000	0.000	0.00	180	0.00	A216/WCBWCB/	0.00	0.00	0.00	665	400	162	372	0.000	0.000	3.12600	0.00000	0.00000
CD-05.1A-06P	58	14.000	0	0.438	0.438	0.000	0.000	0.000	0.00	180	0.00	A106/BB/	0.00	0.00	0.00	665	400	162	372	0.000	0.000	3.12600	0.00000	0.00000

Component Name	Geom Code	Pipe Size OD (in)	Sch.	Tnom (in)	Tinit (in)	Tcrit (in)	Br/Small End OD (in)	Br/Small Tnom (in)	R / D Ratio	Orient Angle (Deg.)	Pipe Length (in)	Spec/Type/ Class	Material Cr. (%)	Cu. (%)	Mo. (%)	Design Press. (psig)	Design Temp. (Deg. F)	Op. Press. (psig)	Op. Temp. (Deg. F)	Op. Enth. (Btu/lbm)	Op. Qual.	Flow Rate U/S Mn. (Mlbm/hr)	D/S Mn. (Mlbm/hr)	Br.
CD-05.1A-07E	2	14.000	0	0.438	0.438	0.000	0.000	0.000	1.50	90	0.00	A234/WPBWPB/	0.00	0.00	0.00	665	400	162	372	0.000	0.000	3.12600	0.00000	0.00000
CD-05.1A-08P	52	14.000	0	0.438	0.438	0.000	0.000	0.000	0.00	90	0.00	A106/BB/	0.00	0.00	0.00	665	400	162	372	0.000	0.000	3.12600	0.00000	0.00000
CD-05.1A-09E	4	14.000	0	0.438	0.438	0.000	0.000	0.000	1.50	90	0.00	A234/WPBWPB/	0.00	0.00	0.00	665	400	162	372	0.000	0.000	3.12600	0.00000	0.00000
CD-05.1A-10P	54	14.000	0	0.438	0.438	0.000	0.000	0.000	0.00	90	0.00	A106/BB/	0.00	0.00	0.00	665	400	162	372	0.000	0.000	3.12600	0.00000	0.00000
CD-05.1A-11R	18	24.000	40	0.688	0.000	0.000	14.000	0.438	0.00	90	0.00	A234/WPBWPB/	0.00	0.00	0.00	665	400	162	372	0.000	0.000	3.12600	3.12600	0.00000
CD-05.2-01P	68	24.000	0	0.688	0.688	0.000	0.000	0.000	0.00	90	0.00	A106/BB/	0.00	0.00	0.00	665	400	162	372	0.000	0.000	3.12600	0.00000	0.00000
Line Name : CD-05.3 FWH 35 OUT HDR																								
CD-05.1B-09T	12	24.000	40	0.688	0.724	0.000	14.000	0.438	0.00	90	0.00	A106/BB/	0.00	0.00	0.00	665	400	162	372	0.000	0.000	3.12600	6.25200	3.12600
Line Name : CD-05.1B FWH 35B to HDR																								
CD-05.1B-01N	31	14.000	0	0.438	0.438	0.000	0.000	0.000	0.00	90	0.00	A106/BB/	0.00	0.00	0.00	665	400	162	372	0.000	0.000	3.12600	0.00000	0.00000
CD-05.1B-02E	4	14.000	0	0.438	0.438	0.000	0.000	0.000	1.50	90	0.00	A234/WPBWPB/	0.00	0.00	0.00	665	400	162	372	0.000	0.000	3.12600	0.00000	0.00000
CD-05.1B-03E	4	14.000	0	0.438	0.438	0.000	0.000	0.000	1.50	90	0.00	A234/WPBWPB/	0.00	0.00	0.00	665	400	162	372	0.000	0.000	3.12600	0.00000	0.00000
CD-05.1B-04P	54	14.000	0	0.438	0.438	0.000	0.000	0.000	0.00	180	0.00	A106/BB/	0.00	0.00	0.00	665	400	162	372	0.000	0.000	3.12600	0.00000	0.00000
CD-05.1B-05V	22	14.000	0	0.438	0.438	0.000	0.000	0.000	0.00	180	0.00	A216/WCBWCB/	0.00	0.00	0.00	665	400	162	372	0.000	0.000	3.12600	0.00000	0.00000
CD-05.1B-06P	58	14.000	0	0.438	0.438	0.000	0.000	0.000	0.00	180	0.00	A106/BB/	0.00	0.00	0.00	665	400	162	372	0.000	0.000	3.12600	0.00000	0.00000
CD-05.1B-07E	2	14.000	40	0.438	0.575	0.000	0.000	0.000	1.50	90	0.00	A234/WPBWPB/	0.00	0.00	0.00	665	400	162	372	0.000	0.000	3.12600	0.00000	0.00000
CD-05.1B-08P	52	14.000	40	0.438	0.465	0.000	0.000	0.000	0.00	90	0.00	A106/BB/	0.00	0.00	0.00	665	400	162	372	0.000	0.000	3.12600	0.00000	0.00000
Line Name : CD-05.1C FWH 35C to HDR																								
CD-05.1C-01N	31	14.000	0	0.438	0.438	0.000	0.000	0.000	0.00	90	0.00	A106/BB/	0.00	0.00	0.00	665	400	162	372	0.000	0.000	3.12600	0.00000	0.00000
CD-05.1C-02E	4	14.000	0	0.438	0.438	0.000	0.000	0.000	1.50	90	0.00	A234/WPBWPB/	0.00	0.00	0.00	665	400	162	372	0.000	0.000	3.12600	0.00000	0.00000
CD-05.1C-03E	4	14.000	0	0.438	0.438	0.000	0.000	0.000	1.50	90	0.00	A234/WPBWPB/	0.00	0.00	0.00	665	400	162	372	0.000	0.000	3.12600	0.00000	0.00000
CD-05.1C-04P	54	14.000	0	0.438	0.438	0.000	0.000	0.000	0.00	180	0.00	A106/BB/	0.00	0.00	0.00	665	400	162	372	0.000	0.000	3.12600	0.00000	0.00000
CD-05.1C-05V	22	14.000	0	0.438	0.438	0.000	0.000	0.000	0.00	180	0.00	A216/WCBWCB/	0.00	0.00	0.00	665	400	162	372	0.000	0.000	3.12600	0.00000	0.00000
CD-05.1C-06P	58	14.000	0	0.438	0.438	0.000	0.000	0.000	0.00	180	0.00	A106/BB/	0.00	0.00	0.00	665	400	162	372	0.000	0.000	3.12600	0.00000	0.00000
CD-05.1C-07E	2	14.000	0	0.438	0.438	0.000	0.000	0.000	1.50	90	0.00	A234/WPBWPB/	0.00	0.00	0.00	665	400	162	372	0.000	0.000	3.12600	0.00000	0.00000
CD-05.1C-08E	4	14.000	0	0.438	0.438	0.000	0.000	0.000	1.50	90	0.00	A234/WPBWPB/	0.00	0.00	0.00	665	400	162	372	0.000	0.000	3.12600	0.00000	0.00000
CD-05.1C-09P	54	14.000	40	0.438	0.498	0.000	0.000	0.000	0.00	90	0.00	A106/BB/	0.00	0.00	0.00	665	400	162	372	0.000	0.000	3.12600	0.00000	0.00000
Line Name : CD-05.3 FWH 35 OUT HDR																								
CD-05.3-01P	62	24.000	40	0.688	0.724	0.000	0.000	0.000	0.00	90	0.00	A106/BB/	0.00	0.00	0.00	665	400	162	372	0.000	0.000	6.25200	0.00000	0.00000
Line Name : CD-05.4 FWH 35 OUT HDR																								
CD-05.1C-10T	12	24.000	40	0.688	0.000	0.000	14.000	0.438	0.00	90	0.00	A106/BB/	0.00	0.00	0.00	665	400	162	372	0.000	0.000	6.25200	9.37800	3.12600
CD-05.4-04P	62	24.000	0	0.688	0.688	0.000	0.000	0.000	0.00	90	0.00	A106/BB/	0.00	0.00	0.00	665	400	162	372	0.000	0.000	9.37800	0.00000	0.00000
CD-05.4-01E	4	24.000	0	0.688	0.688	0.000	0.000	0.000	1.00	90	0.00	A234/WPBWPB/	0.00	0.00	0.00	665	400	162	372	0.000	0.000	9.37800	0.00000	0.00000
CD-05.4-02P	54	24.000	40	0.688	0.722	0.000	0.000	0.000	0.00	180	0.00	A106/BB/	0.00	0.00	0.00	665	400	162	372	0.000	0.000	9.37800	0.00000	0.00000
CD-05.4-05P	60	30.000	0	0.625	0.625	0.000	0.000	0.000	0.00	90	0.00	A155/KC701/	0.00	0.00	0.00	665	400	162	372	0.000	0.000	9.37800	0.00000	0.00000
Line Name : CD-06.1 FWH 35 OUT HDR																								
CD-06.1-01T	12	30.000	0	0.625	0.659	0.000	16.000	0.500	0.00	90	0.00	A155/KC701/	0.00	0.00	0.00	665	400	156	369	0.000	0.000	9.37800	13.02500	3.64700
CD-06.1-02P	62	28.000	0	0.625	0.663	0.000	0.000	0.000	0.00	90	0.00	A155/KC701/	0.00	0.00	0.00	665	400	156	369	0.000	0.000	13.02500	0.00000	0.00000
CD-06.1-03T	14	30.000	0	0.625	0.702	0.000	24.000	0.688	0.00	90	0.00	A155/KC701/	0.00	0.00	0.00	665	400	156	369	0.000	0.000	13.02500	6.51250	6.51250
Line Name : CD-06.2A HDR to BFP 31																								
CD-06.2A-01P	64	24.000	40	0.688	0.721	0.000	0.000	0.000	0.00	0	0.00	A106/BB/	0.00	0.00	0.00	665	400	156	369	0.000	0.000	6.51200	0.00000	0.00000
CD-06.2A-02E	2	24.000	40	0.688	0.729	0.000	0.000	0.000	1.50	90	0.00	A234/WPBWPB/	0.00	0.00	0.00	665	400	156	369	0.000	0.000	6.51200	0.00000	0.00000
CD-06.2A-03P	52	24.000	0	0.688	0.688	0.000	0.000	0.000	0.00	90	0.00	A106/BB/	0.00	0.00	0.00	665	400	156	369	0.000	0.000	6.51200	0.00000	0.00000
CD-06.2A-04E	2	24.000	0	0.688	0.688	0.000	0.000	0.000	1.50	90	0.00	A234/WPBWPB/	0.00	0.00	0.00	665	400	156	369	0.000	0.000	6.51200	0.00000	0.00000
CD-06.2A-05P	52	24.000	0	0.688	0.688	0.000	0.000	0.000	0.00	90	0.00	A106/BB/	0.00	0.00	0.00	665	400	156	369	0.000	0.000	6.51200	0.00000	0.00000
CD-06.2A-06E	2	24.000	0	0.688	0.688	0.000	0.000	0.000	1.50	90	0.00	A234/WPBWPB/	0.00	0.00	0.00	665	400	156	369	0.000	0.000	6.51200	0.00000	0.00000

Component Name	Geom Code	Pipe Size OD (in)	Sch.	Tnom (in)	Tinit (in)	Tcrit (in)	Br/Small End OD (in)	Br/Small Tnom (in)	R / D Ratio	Orient Angle (Deg.)	Pipe Length (in)	Spec/Type/ Class	Material Cr. (%)	Cu. (%)	Mo. (%)	Design Press. (psig)	Design Temp. (Deg. F)	Op. Press. (psig)	Op. Temp. (Deg. F)	Op. Enth. (Btu/lbm)	Op. Qual.	Flow Rate U/S Mn.	D/S Mn. (Mlbm/hr)	Br.
CD-06.2A-07V	22	24.000	0	0.688	0.688	0.000	0.000	0.000	0.00	90	0.00	A216/WCBWCB/	0.00	0.00	0.00	665	400	156	369	0.000	0.000	6.51200	0.00000	0.00000
CD-06.2A-08P	58	24.000	0	0.688	0.688	0.000	0.000	0.000	0.00	90	0.00	A106/BB/	0.00	0.00	0.00	665	400	156	369	0.000	0.000	6.51200	0.00000	0.00000
CD-06.2A-09E	2	24.000	0	0.688	0.688	0.000	0.000	0.000	1.50	90	0.00	A234/WPBWPB/	0.00	0.00	0.00	665	400	156	369	0.000	0.000	6.51200	0.00000	0.00000
CD-06.2A-10P	52	24.000	0	0.688	0.688	0.000	0.000	0.000	0.00	180	0.00	A106/BB/	0.00	0.00	0.00	665	400	156	369	0.000	0.000	6.51200	0.00000	0.00000
CD-06.2A-11E	4	24.000	0	0.688	0.688	0.000	0.000	0.000	1.50	90	0.00	A234/WPBWPB/	0.00	0.00	0.00	665	400	156	369	0.000	0.000	6.51200	0.00000	0.00000
CD-06.2A-12P	54	24.000	0	0.688	0.688	0.000	0.000	0.000	0.00	90	0.00	A106/BB/	0.00	0.00	0.00	665	400	156	369	0.000	0.000	6.51200	0.00000	0.00000
CD-06.2A-13E	2	24.000	0	0.688	0.688	0.000	0.000	0.000	1.50	90	0.00	A234/WPBWPB/	0.00	0.00	0.00	665	400	156	369	0.000	0.000	6.51200	0.00000	0.00000
CD-06.2A-14P	52	24.000	0	0.688	0.688	0.000	0.000	0.000	0.00	0	0.00	A106/BB/	0.00	0.00	0.00	665	400	156	369	0.000	0.000	6.51200	0.00000	0.00000
CD-06.2A-15E	2	24.000	0	0.688	0.688	0.000	0.000	0.000	1.50	90	0.00	A234/WPBWPB/	0.00	0.00	0.00	665	400	156	369	0.000	0.000	6.51200	0.00000	0.00000
CD-06.2A-16P	52	24.000	0	0.688	0.688	0.000	0.000	0.000	0.00	90	0.00	A106/BB/	0.00	0.00	0.00	665	400	156	369	0.000	0.000	6.51200	0.00000	0.00000
CD-06.2A-17E	2	24.000	0	0.688	0.688	0.000	0.000	0.000	1.50	90	0.00	A234/WPBWPB/	0.00	0.00	0.00	665	400	156	369	0.000	0.000	6.51200	0.00000	0.00000
CD-06.2A-18P	52	24.000	0	0.688	0.688	0.000	0.000	0.000	0.00	180	0.00	A106/BB/	0.00	0.00	0.00	665	400	156	369	0.000	0.000	6.51200	0.00000	0.00000
CD-06.2A-19E	2	24.000	0	0.688	0.688	0.000	0.000	0.000	1.00	90	0.00	A234/WPBWPB/	0.00	0.00	0.00	665	400	156	369	0.000	0.000	6.51200	0.00000	0.00000
CD-06.2A-20E	4	24.000	0	0.688	0.688	0.000	0.000	0.000	1.00	90	0.00	A234/WPBWPB/	0.00	0.00	0.00	665	400	156	369	0.000	0.000	6.51200	0.00000	0.00000
CD-06.2A-21P	54	24.000	0	0.688	0.688	0.000	0.000	0.000	0.00	90	0.00	A106/BB/	0.00	0.00	0.00	665	400	156	369	0.000	0.000	6.51200	0.00000	0.00000
CD-06.2A-22P	9	24.000	0	0.688	0.688	0.000	0.000	0.000	0.00	90	0.00	A106/BB/	0.00	0.00	0.00	665	400	156	369	0.000	0.000	6.51200	0.00000	0.00000
CD-06.2A-23P	9	24.000	0	0.688	0.688	0.000	0.000	0.000	0.00	90	0.00	A106/BB/	0.00	0.00	0.00	665	400	156	369	0.000	0.000	6.51200	0.00000	0.00000
CD-06.2A-24O	6	24.000	0	0.688	0.688	0.000	0.000	0.000	0.00	90	0.00	A106/BB/	0.00	0.00	0.00	665	400	156	369	0.000	0.000	6.51200	0.00000	0.00000
CD-06.2A-25P	56	24.000	0	0.688	0.688	0.000	0.000	0.000	0.00	90	0.00	A106/BB/	0.00	0.00	0.00	665	400	156	369	0.000	0.000	6.51200	0.00000	0.00000
CD-06.2A-26E	2	24.000	0	0.688	0.688	0.000	0.000	0.000	1.50	90	0.00	A234/WPBWPB/	0.00	0.00	0.00	665	400	156	369	0.000	0.000	6.51200	0.00000	0.00000
CD-06.2A-27P	52	24.000	0	0.688	0.688	0.000	0.000	0.000	0.00	0	0.00	A106/BB/	0.00	0.00	0.00	665	400	156	369	0.000	0.000	6.51200	0.00000	0.00000
CD-06.2A-28E	4	24.000	0	0.688	0.688	0.000	0.000	0.000	1.50	90	0.00	A234/WPBWPB/	0.00	0.00	0.00	665	400	156	369	0.000	0.000	6.51200	0.00000	0.00000
CD-06.2A-29P	54	24.000	0	0.688	0.688	0.000	0.000	0.000	0.00	90	0.00	A106/BB/	0.00	0.00	0.00	665	400	156	369	0.000	0.000	6.51200	0.00000	0.00000
CD-06.2A-30E	1	24.000	0	0.688	0.688	0.000	0.000	0.000	1.50	90	0.00	A234/WPBWPB/	0.00	0.00	0.00	665	400	156	369	0.000	0.000	6.51200	0.00000	0.00000
CD-06.2A-31E	3	24.000	0	0.688	0.688	0.000	0.000	0.000	1.50	90	0.00	A234/WPBWPB/	0.00	0.00	0.00	665	400	156	369	0.000	0.000	6.51200	0.00000	0.00000
CD-06.2A-32P	53	24.000	0	0.688	0.688	0.000	0.000	0.000	0.00	90	0.00	A106/BB/	0.00	0.00	0.00	665	400	156	369	0.000	0.000	6.51200	0.00000	0.00000
CD-06.2A-33E	2	24.000	0	0.688	0.688	0.000	0.000	0.000	1.50	90	0.00	A234/WPBWPB/	0.00	0.00	0.00	665	400	156	369	0.000	0.000	6.51200	0.00000	0.00000
CD-06.2A-34P	52	24.000	0	0.688	0.688	0.000	0.000	0.000	0.00	180	0.00	A106/BB/	0.00	0.00	0.00	665	400	156	369	0.000	0.000	6.51200	0.00000	0.00000
CD-06.3A-01R	17	24.000	40	0.688	0.000	0.000	18.000	0.562	0.00	180	0.00	A234/WPBWPB/	0.00	0.00	0.00	665	400	156	369	0.000	0.000	6.51200	6.51200	0.00000
CD-06.3A-02N	30	18.000	0	0.562	0.562	0.000	0.000	0.000	0.00	90	0.00	A106/BB/	0.00	0.00	0.00	665	400	156	369	0.000	0.000	6.51200	0.00000	0.00000
Line Name : CD-06.2B HDR to BFP 32																								
CD-06.2B-01R	7	30.000	0	0.625	0.000	0.000	24.000	0.688	0.00	90	0.00	A234/WPBWPB/	0.00	0.00	0.00	625	400	156	369	0.000	0.000	6.51200	6.51200	0.00000
CD-06.2B-02P	57	24.000	40	0.688	0.702	0.000	0.000	0.000	0.00	90	0.00	A106/BB/	0.00	0.00	0.00	665	400	156	369	0.000	0.000	6.51200	0.00000	0.00000
CD-06.2B-35P	9	24.000	0	0.688	0.688	0.000	0.000	0.000	0.00	90	0.00	A106/BB/	0.00	0.00	0.00	665	400	156	369	0.000	0.000	6.51200	0.00000	0.00000
CD-06.2B-03T	15	24.000	0	0.688	0.688	0.000	12.000	0.406	0.00	90	0.00	A106/BB/	0.00	0.00	0.00	665	400	156	369	0.000	0.000	6.51200	6.51200	0.00000
CD-06.2B-04T	13	24.000	0	0.688	0.688	0.000	24.000	0.688	0.00	90	0.00	A106/BB/	0.00	0.00	0.00	665	400	156	369	0.000	0.000	6.51200	0.00000	6.51200
CD-06.2B-05V	22	24.000	0	0.688	0.688	0.000	0.000	0.000	0.00	90	0.00	A216/WCBWCB/	0.00	0.00	0.00	665	400	156	369	0.000	0.000	6.51200	0.00000	0.00000
CD-06.2B-06E	4	24.000	0	0.688	0.688	0.000	0.000	0.000	1.50	90	0.00	A234/WPBWPB/	0.00	0.00	0.00	665	400	156	369	0.000	0.000	6.51200	0.00000	0.00000
CD-06.2B-07P	54	24.000	0	0.688	0.688	0.000	0.000	0.000	0.00	90	0.00	A106/BB/	0.00	0.00	0.00	665	400	156	369	0.000	0.000	6.51200	0.00000	0.00000
CD-06.2B-36P	9	24.000	0	0.688	0.688	0.000	0.000	0.000	0.00	90	0.00	A106/BB/	0.00	0.00	0.00	665	400	156	369	0.000	0.000	6.51200	0.00000	0.00000
CD-06.2B-08O	6	24.000	0	0.688	0.688	0.000	0.000	0.000	0.00	90	0.00	A106/BB/	0.00	0.00	0.00	665	400	156	369	0.000	0.000	6.51200	0.00000	0.00000
CD-06.2B-09P	56	24.000	0	0.688	0.688	0.000	0.000	0.000	0.00	90	0.00	A106/BB/	0.00	0.00	0.00	665	400	156	369	0.000	0.000	6.51200	0.00000	0.00000
CD-06.2B-10E	2	24.000	0	0.688	0.688	0.000	0.000	0.000	1.50	90	0.00	A234/WPBWPB/	0.00	0.00	0.00	665	400	156	369	0.000	0.000	6.51200	0.00000	0.00000
CD-06.2B-11P	52	24.000	0	0.688	0.688	0.000	0.000	0.000	0.00	0	0.00	A106/BB/	0.00	0.00	0.00	665	400	156	369	0.000	0.000	6.51200	0.00000	0.00000
CD-06.2B-12E	4	24.000	0	0.688	0.688	0.000	0.000	0.000	1.50	90	0.00	A234/WPBWPB/	0.00	0.00	0.00	665	400	156	369	0.000	0.000	6.51200	0.00000	0.00000
CD-06.2B-13P	54	24.000	0	0.688	0.688	0.000	0.000	0.000	0.00	90	0.00	A106/BB/	0.00	0.00	0.00	665	400	156	369	0.000	0.000	6.51200	0.00000	0.00000
CD-06.2B-14E	2	24.000	0	0.688	0.688	0.000	0.000	0.000	1.50	90	0.00	A234/WPBWPB/	0.00	0.00	0.00	665	400	156	369	0.000	0.000	6.51200	0.00000	0.00000
CD-06.2B-15P	52	24.000	0	0.688	0.688	0.000	0.000	0.000	0.00	180	0.00	A106/BB/	0.00	0.00	0.00	665	400	156	369	0.000	0.000	6.51200	0.00000	0.00000
CD-06.3B-01R	17	24.000	40	0.688	0.000	0.000	18.000	0.562	0.00	180	0.00	A234/WPBWPB/	0.00	0.00	0.00	665	400	156	369	0.000	0.000	6.51200	6.51200	0.00000
CD-06.3B-02N	30	18.000	0	0.562	0.562	0.000	0.000	0.000	0.00	90	0.00	A106/BB/	0.00	0.00	0.00	665	400	156	369	0.000	0.000	6.51200	0.00000	0.00000
Line Name : EX-01.1 HP EXT to FWH 36 HDR																								
EX-01.1-01N	31	12.750	0	0.330	0.330	0.000	0.000	0.000	0.00	90	0.00	A106/BB/	0.00	0.00	0.00	450	450	334	0	1136.859	0.000	0.35300	0.00000	0.00000
EX-01.1-02E	4	12.750	0	0.330	0.446	0.000	0.000	0.000	1.50	90	0.00	A-213/TP304TP3/	0.00	0.00	0.00	450	450	334	0	1136.830	0.000	0.35300	0.00000	0.00000
EX-01.1-03P	54	12.750	0	0.330	0.352	0.000	0.000	0.000	0.00	90	0.00	A-213/TP304TP3/	0.00	0.00	0.00	450	450	334	0	1136.830	0.000	0.35300	0.00000	0.00000
EX-01.1-04E	4	12.750	0	0.330	0.450	0.000	0.000	0.000	1.50	90	0.00	A-213/TP304TP3/	0.00	0.00	0.00	450	450	334	0	1136.810	0.000	0.35300	0.00000	0.00000
EX-01.1-05P	54	12.750	0	0.330	0.368	0.000	0.000	0.000	0.00	180	0.00	A-213/TP304TP3/	0.00	0.00	0.00	450	450	334	0	1136.830	0.000	0.35300	0.00000	0.00000
EX-01.1-06E	2	12.750	0	0.330	0.330	0.000	0.000	0.000	1.00	90	0.00	A-213/TP304TP3/	0.00	0.00	0.00	450	450	334	0	1136.859	0.000	0.35300	0.00000	0.00000
EX-01.1-07P	52	12.750	0	0.330	0.330	0.000	0.000	0.000	0.00	90	0.00	A-213/TP304TP3/	0.00	0.00	0.00	450	450	334	0	1136.859	0.000	0.35300	0.00000	0.00000
EX-01.1-08R	18	18.000	0	0.438	0.000	0.000	12.750	0.330	0.00	90	0.00	A-213/TP304TP3/	0.00	0.00	0.00	450	450	334	0	1136.859	0.000	0.35300	0.35300	0.00000
EX-01.6-01P	68	18.000	0	0.375	0.378	0.000	0.000	0.000	0.00	90	0.00	A-213/TP304TP3/	0.00	0.00	0.00	450	450	334	0	1136.810	0.000	0.35300	0.00000	0.00000

Component Name	Geom Code	Pipe Size OD (in)	Sch.	Tnom (in)	Tinit (in)	Tcrit (in)	Br/Small End OD (in)	Br/Small Tnom (in)	R / D Ratio	Orient Angle (Deg.)	Pipe Length (in)	Spec/Type/ Class	Material Cr. (%)	Material Cu. (%)	Material Mo. (%)	Design Press. (psig)	Design Temp. (Deg. F)	Op. Press. (psig)	Op. Temp. (Deg. F)	Op. Enth. (Btu/lbm)	Op. Qual.	Flow Rate U/S Mn. (Mlbm/hr)	Flow Rate D/S Mn. (Mlbm/hr)	Br.
Line Name : EX-01.3 HP EXT FWH 36 HEADER																								
EX-01.2-10L	12	18.000	0	0.375	0.482	0.000	12.750	0.375	0.00	90	0.00	A-213/TP304TP3/	0.00	0.00	0.00	450	450	334	0	1136.810	0.000	0.35300	0.70600	0.35300
Line Name : EX-01.2 HP EXT to FWH 36 HDR																								
EX-01.2-01N	31	12.750	0	0.330	0.330	0.000	0.000	0.000	0.00	90	0.00	A106/BB/	0.00	0.00	0.00	450	450	334	0	1136.859	0.000	0.35300	0.00000	0.00000
EX-01.2-02E	4	12.750	0	0.330	0.000	0.000	0.000	0.000	1.00	90	0.00	A-213/TP304TP3/	0.00	0.00	0.00	450	450	334	0	1136.830	0.000	0.35300	0.00000	0.00000
EX-01.2-03P	54	12.750	0	0.330	0.385	0.000	0.000	0.000	0.00	90	0.00	A-213/TP304TP3/	0.00	0.00	0.00	450	450	334	0	1136.830	0.000	0.35300	0.00000	0.00000
EX-01.2-04E	3	12.750	0	0.330	0.330	0.000	0.000	0.000	1.50	90	0.00	A-213/TP304TP3/	0.00	0.00	0.00	450	450	334	0	1136.859	0.000	0.35300	0.00000	0.00000
EX-01.2-05P	53	12.750	0	0.330	0.330	0.000	0.000	0.000	0.00	90	0.00	A-213/TP304TP3/	0.00	0.00	0.00	450	450	334	0	1136.810	0.000	0.35300	0.00000	0.00000
EX-01.2-06E	4	12.750	0	0.330	0.330	0.000	0.000	0.000	1.50	90	0.00	A-213/TP304TP3/	0.00	0.00	0.00	450	450	334	0	1136.850	0.000	0.35300	0.00000	0.00000
EX-01.2-07P	54	12.750	0	0.330	0.330	0.000	0.000	0.000	0.00	180	0.00	A-213/TP304TP3/	0.00	0.00	0.00	450	450	334	0	1136.810	0.000	0.35300	0.00000	0.00000
EX-01.2-08E	1	12.750	0	0.330	0.330	0.000	0.000	0.000	1.50	90	0.00	A-213/TP304TP3/	0.00	0.00	0.00	450	450	334	0	1136.859	0.000	0.35300	0.00000	0.00000
EX-01.2-09P	51	12.750	0	0.375	0.357	0.000	0.000	0.000	0.00	135	0.00	A-213/TP304TP3/	0.00	0.00	0.00	450	450	334	0	1136.820	0.000	0.35300	0.00000	0.00000
Line Name : EX-01.3 HP EXT FWH 36 HEADER																								
EX-01.3-01P	62	18.000	0	0.438	0.456	0.000	0.000	0.000	0.00	90	0.00	A-213/TP304TP3/	0.00	0.00	0.00	450	450	334	0	1136.830	0.000	0.70600	0.00000	0.00000
EX-01.3-02E	2	18.000	0	0.438	0.438	0.000	0.000	0.000	1.50	90	0.00	A-213/TP304TP3/	0.00	0.00	0.00	450	450	334	0	1136.859	0.000	0.70600	0.00000	0.00000
EX-01.3-03P	52	18.000	0	0.438	0.438	0.000	0.000	0.000	0.00	90	0.00	A-213/TP304TP3/	0.00	0.00	0.00	450	450	334	0	1136.859	0.000	0.70600	0.00000	0.00000
EX-01.3-04T	15	18.000	0	0.438	0.468	0.000	6.625	0.280	0.00	90	0.00	A-213/TP304TP3/	0.00	0.00	0.00	450	450	334	0	1136.810	0.000	0.70600	0.70600	0.00000
EX-01.3-05P	65	18.000	0	0.438	0.464	0.000	0.000	0.000	0.00	90	0.00	A-213/TP304TP3/	0.00	0.00	0.00	450	450	334	0	1136.830	0.000	0.70600	0.00000	0.00000
EX-01.3-06V	22	18.000	0	0.438	0.438	0.000	0.000	0.000	0.00	90	0.00	A216/WCBWCB/	0.00	0.00	0.00	450	450	334	0	1136.859	0.000	0.70600	0.00000	0.00000
EX-01.3-07V	25	18.000	0	0.438	0.438	0.000	0.000	0.000	0.00	90	0.00	A216/WCBWCB/	0.00	0.00	0.00	450	450	334	0	1136.859	0.000	0.70600	0.00000	0.00000
EX-01.3-08V	25	18.000	0	0.438	0.438	0.000	0.000	0.000	0.00	90	0.00	A216/WCBWCB/	0.00	0.00	0.00	450	450	334	0	1136.859	0.000	0.70600	0.00000	0.00000
EX-01.3-09E	4	18.000	0	0.438	0.438	0.000	0.000	0.000	1.50	90	0.00	A-213/TP304TP3/	0.00	0.00	0.00	450	450	334	0	1136.859	0.000	0.70600	0.00000	0.00000
EX-01.3-10P	54	18.000	0	0.438	0.438	0.000	0.000	0.000	0.00	180	0.00	A-213/TP304TP3/	0.00	0.00	0.00	450	450	334	0	1136.859	0.000	0.70600	0.00000	0.00000
EX-01.3-11T	15	18.000	0	0.438	0.438	0.000	4.500	0.237	0.00	180	0.00	A-213/TP304TP3/	0.00	0.00	0.00	450	450	334	0	1136.859	0.000	0.70600	0.70600	0.00000
EX-01.3-12P	65	18.000	0	0.438	0.438	0.000	0.000	0.000	0.00	180	0.00	A-213/TP304TP3/	0.00	0.00	0.00	450	450	334	0	1136.859	0.000	0.70600	0.00000	0.00000
EX-01.3-13E	2	18.000	0	0.438	0.438	0.000	0.000	0.000	1.50	90	0.00	A-213/TP304TP3/	0.00	0.00	0.00	450	450	334	0	1136.859	0.000	0.70600	0.00000	0.00000
EX-01.3-14P	52	18.000	0	0.438	0.438	0.000	0.000	0.000	0.00	90	0.00	A-213/TP304TP3/	0.00	0.00	0.00	450	450	334	0	1136.859	0.000	0.70600	0.00000	0.00000
EX-01.3-15E	2	18.000	0	0.438	0.438	0.000	0.000	0.000	1.50	90	0.00	A-213/TP304TP3/	0.00	0.00	0.00	450	450	334	0	1136.859	0.000	0.70600	0.00000	0.00000
EX-01.3-16P	52	18.000	0	0.438	0.460	0.000	0.000	0.000	0.00	90	0.00	A-213/TP304TP3/	0.00	0.00	0.00	450	450	334	0	1136.830	0.000	0.70600	0.00000	0.00000
EX-01.3-17T	15	18.000	0	0.438	0.501	0.000	6.625	0.280	0.00	90	0.00	A-213/TP304TP3/	0.00	0.00	0.00	450	450	334	0	1136.830	0.000	0.70600	0.70600	0.00000
EX-01.3-19E	4	18.000	0	0.438	0.000	0.000	0.000	0.000	1.00	90	0.00	A-213/TP304TP3/	0.00	0.00	0.00	450	450	334	0	1136.830	0.000	0.70600	0.00000	0.00000
EX-01.3-20P	54	18.000	0	0.438	0.438	0.000	0.000	0.000	0.00	0	0.00	A-213/TP304TP3/	0.00	0.00	0.00	450	450	334	0	1136.859	0.000	0.70600	0.00000	0.00000
EX-01.3-21E	2	18.000	0	0.438	0.438	0.000	0.000	0.000	1.00	90	0.00	A-213/TP304TP3/	0.00	0.00	0.00	450	450	334	0	1136.859	0.000	0.70600	0.00000	0.00000
EX-01.3-22P	52	18.000	0	0.438	0.528	0.000	0.000	0.000	0.00	90	0.00	A-213/TP304TP3/	0.00	0.00	0.00	450	450	334	0	1136.830	0.000	0.70600	0.00000	0.00000
EX-01.3-23T	14	18.000	0	0.438	0.539	0.000	12.750	0.330	0.00	90	0.00	A-213/TP304TP3/	0.00	0.00	0.00	450	450	334	0	1136.820	0.000	0.70600	0.47100	0.23500
Line Name : EX-01.4 HP EXT FWH 36 HEADER																								
EX-01.4-01P	63	18.000	0	0.438	0.528	0.000	0.000	0.000	0.00	90	0.00	A-213/TP304TP3/	0.00	0.00	0.00	450	450	334	0	1136.830	0.000	0.47100	0.00000	0.00000
EX-01.4-02T	14	18.000	0	0.438	0.439	0.000	12.750	0.330	0.00	90	0.00	A-213/TP304TP3/	0.00	0.00	0.00	450	450	334	0	1136.830	0.000	0.47100	0.23600	0.23500
Line Name : EX-01.5A HP EX HDR to FWH 36A																								
EX-01.7-01P	63	18.000	0	0.438	0.438	0.000	0.000	0.000	0.00	90	0.00	A-213/TP304TP3/	0.00	0.00	0.00	450	450	334	0	1136.859	0.000	0.23500	0.00000	0.00000
EX-01.5A-01R	7	18.000	0	0.438	0.000	0.000	12.750	0.330	0.00	90	0.00	A-213/TP304TP3/	0.00	0.00	0.00	450	450	334	0	1136.810	0.000	0.23500	0.23500	0.00000
EX-01.5A-02P	57	12.750	0	0.330	0.374	0.000	0.000	0.000	0.00	90	0.00	A-213/TP304TP3/	0.00	0.00	0.00	450	450	334	0	1136.810	0.000	0.23500	0.00000	0.00000
EX-01.5A-03E	102	12.750	0	0.375	0.000	0.000	0.000	0.000	1.50	90	0.00	A-213/TP304TP3/	0.00	0.00	0.00	450	450	334	0	1136.810	0.000	0.23500	0.00000	0.00000
EX-01.5A-04P	52	12.750	0	0.375	0.411	0.000	0.000	0.000	0.00	180	0.00	A-213/TP304TP3/	0.00	0.00	0.00	450	450	334	0	1136.810	0.000	0.23500	0.00000	0.00000
EX-01.5A-05E	4	12.750	0	0.375	0.419	0.000	0.000	0.000	1.50	90	0.00	A-213/TP304TP3/	0.00	0.00	0.00	450	450	334	0	1136.810	0.000	0.23500	0.00000	0.00000
EX-01.5A-06P	54	12.750	0	0.375	0.000	0.000	0.000	0.000	0.00	90	0.00	A-213/TP304TP3/	0.00	0.00	0.00	450	450	334	0	1136.820	0.000	0.23500	0.00000	0.00000
EX-01.5A-16L	12	12.750	0	0.375	0.000	0.000	3.500	0.216	0.00	90	0.00	A-213/TP304TP3/	0.00	0.00	0.00	450	450	334	0	905.640	0.000	0.23500	0.36810	0.13310
EX-01.5A-07L	12	12.750	0	0.375	0.000	0.000	3.500	0.216	0.00	90	0.00	A-213/TP304TP3/	0.00	0.00	0.00	450	450	334	0	796.929	0.000	0.36810	0.50070	0.13260
EX-01.5A-08P	62	12.750	0	0.375	0.000	0.000	0.000	0.000	0.00	90	0.00	A-213/TP304TP3/	0.00	0.00	0.00	450	450	334	0	796.929	0.000	0.50070	0.00000	0.00000
EX-01.5A-09E	102	12.750	0	0.375	0.000	0.000	0.000	0.000	1.50	90	0.00	A-213/TP304TP3/	0.00	0.00	0.00	450	450	334	0	796.929	0.000	0.50070	0.00000	0.00000
EX-01.5A-10P	52	12.750	0	0.330	0.330	0.000	0.000	0.000	0.00	0	0.00	A-213/TP304TP3/	0.00	0.00	0.00	450	450	334	0	796.929	0.000	0.50070	0.00000	0.00000
EX-01.5A-11V	22	12.750	0	0.330	0.330	0.000	0.000	0.000	0.00	0	0.00	A216/WCBWCB/	0.00	0.00	0.00	450	450	334	0	796.929	0.000	0.50070	0.00000	0.00000

Component Name	Geom Code	Pipe Size OD (in)	Sch.	Tnom (in)	Tinit (in)	Tcrit (in)	Br/Small End OD (in)	Br/Small Tnom (in)	R / D Ratio	Orient Angle (Deg.)	Pipe Length (in)	Spec/Type/ Class	Material Cr. (%)	Cu. (%)	Mo. (%)	Design Press. (psig)	Design Temp. (Deg. F)	Op. Press. (psig)	Op. Temp. (Deg. F)	Op. Enth. (Btu/lbm)	Op. Qual.	Flow Rate U/S Mn. (Mlbm/hr)	D/S Mn. (Mlbm/hr)	Br.
EX-01.5A-12P	58	12.750	0	0.330	0.387	0.000	0.000	0.000	0.00	0	0.00	A-213/TP304TP3/	0.00	0.00	0.00	450	450	334	0	796.929	0.000	0.50070	0.00000	0.00000
EX-01.5A-13E	2	12.750	0	0.330	0.426	0.000	0.000	0.000	1.50	90	0.00	A-213/TP304TP3/	0.00	0.00	0.00	450	450	334	0	796.929	0.000	0.50070	0.00000	0.00000
EX-01.5A-17P	52	12.750	0	0.330	0.335	0.000	0.000	0.000	0.00	90	0.00	A-213/TP304TP3/	0.00	0.00	0.00	450	450	334	0	796.929	0.000	0.50100	0.00000	0.00000
EX-01.5A-14E	4	12.750	0	0.330	0.470	0.000	0.000	0.000	1.00	90	0.00	A-213/TP304TP3/	0.00	0.00	0.00	450	450	334	0	796.929	0.000	0.50070	0.00000	0.00000
EX-01.5A-15N	30	12.750	0	0.330	0.309	0.000	0.000	0.000	0.00	90	0.00	A-213/TP304TP3/	0.00	0.00	0.00	450	450	334	0	796.929	0.000	0.50070	0.00000	0.00000
Line Name : EX-01.5B HP EX HDR to FWH 36B																								
EX-01.5B-01P	64	12.750	0	0.330	0.363	0.000	0.000	0.000	0.00	180	0.00	A-213/TP304TP3/	0.00	0.00	0.00	450	450	334	0	1136.830	0.000	0.23500	0.00000	0.00000
EX-01.5B-02E	2	12.750	0	0.330	0.477	0.000	0.000	0.000	1.50	90	0.00	A-213/TP304TP3/	0.00	0.00	0.00	450	450	334	0	1136.820	0.000	0.23500	0.00000	0.00000
EX-01.5B-03P	52	12.750	0	0.330	0.330	0.000	0.000	0.000	0.00	90	0.00	A-213/TP304TP3/	0.00	0.00	0.00	450	450	334	0	1136.859	0.000	0.23500	0.00000	0.00000
EX.01.5B-14L	12	12.750	0	0.330	0.330	0.000	3.500	0.216	0.00	90	0.00	A-213/TP304TP3/	0.00	0.00	0.00	450	450	334	0	905.640	0.000	0.23500	0.36810	0.13310
EX-01.5B-04L	12	12.750	0	0.330	0.330	0.000	3.500	0.216	0.00	90	0.00	A-213/TP304TP3/	0.00	0.00	0.00	450	450	334	0	796.929	0.000	0.36810	0.50070	0.13260
EX-01.5B-05P	62	12.750	0	0.330	0.330	0.000	0.000	0.000	0.00	90	0.00	A-213/TP304TP3/	0.00	0.00	0.00	450	450	334	0	796.929	0.000	0.50070	0.00000	0.00000
EX-01.5B-06E	1	12.750	0	0.330	0.330	0.000	0.000	0.000	1.50	90	0.00	A-213/TP304TP3/	0.00	0.00	0.00	450	450	334	0	796.929	0.000	0.50070	0.00000	0.00000
EX-01.5B-07E	4	12.750	0	0.330	0.330	0.000	0.000	0.000	1.50	90	0.00	A-213/TP304TP3/	0.00	0.00	0.00	450	450	334	0	796.929	0.000	0.50070	0.00000	0.00000
EX-01.5B-08P	54	12.750	0	0.330	0.330	0.000	0.000	0.000	0.00	0	0.00	A-213/TP304TP3/	0.00	0.00	0.00	450	450	334	0	796.929	0.000	0.50070	0.00000	0.00000
EX-01.5B-09V	22	12.750	0	0.330	0.330	0.000	0.000	0.000	0.00	0	0.00	A216/WCBWCB/	0.00	0.00	0.00	450	450	334	0	796.929	0.000	0.50070	0.00000	0.00000
EX-01.5B-10P	58	12.750	0	0.330	0.374	0.000	0.000	0.000	0.00	0	0.00	A-213/TP304TP3/	0.00	0.00	0.00	450	450	334	0	796.929	0.000	0.50070	0.00000	0.00000
EX-01.5B-11E	2	12.750	0	0.330	0.452	0.000	0.000	0.000	1.50	90	0.00	A-213/TP304TP3/	0.00	0.00	0.00	450	450	334	0	796.929	0.000	0.50070	0.00000	0.00000
EX-01.5B-15P	52	12.750	0	0.330	0.386	0.000	0.000	0.000	0.00	90	0.00	A-213/TP304TP3/	0.00	0.00	0.00	450	450	334	0	796.929	0.000	0.50100	0.00000	0.00000
EX-01.5B-12E	4	12.750	0	0.330	0.543	0.000	0.000	0.000	1.00	90	0.00	A-213/TP304TP3/	0.00	0.00	0.00	450	450	334	0	796.929	0.000	0.50070	0.00000	0.00000
EX-01.5B-13N	30	12.750	0	0.330	0.309	0.000	0.000	0.000	0.00	90	0.00	A-213/TP304TP3/	0.00	0.00	0.00	450	450	334	0	796.929	0.000	0.50070	0.00000	0.00000
Line Name : EX-01.5C HP EX HDR to FWH 36C																								
EX-01.5C-01P	64	12.750	0	0.330	0.450	0.000	0.000	0.000	0.00	180	0.00	A-213/TP304TP3/	0.00	0.00	0.00	450	450	334	0	1136.810	0.000	0.23500	0.00000	0.00000
EX-01.5C-02E	2	12.750	0	0.330	0.423	0.000	0.000	0.000	1.50	90	0.00	A-213/TP304TP3/	0.00	0.00	0.00	450	450	334	0	1136.810	0.000	0.23500	0.00000	0.00000
EX-01.5C-03P	52	12.750	0	0.330	0.377	0.000	0.000	0.000	0.00	90	0.00	A-213/TP304TP3/	0.00	0.00	0.00	450	450	334	0	1136.810	0.000	0.23500	0.00000	0.00000
EX.01.5C-14L	12	12.750	0	0.330	0.373	0.000	3.500	0.216	0.00	90	0.00	A-213/TP304TP3/	0.00	0.00	0.00	450	450	334	0	905.640	0.000	0.23500	0.36810	0.13310
EX-01.5C-04L	12	12.750	0	0.330	0.364	0.000	3.500	0.216	0.00	90	0.00	A-213/TP304TP3/	0.00	0.00	0.00	450	450	334	0	796.929	0.000	0.36810	0.50070	0.13260
EX-01.5C-05P	62	12.750	0	0.330	0.373	0.000	0.000	0.000	0.00	90	0.00	A-213/TP304TP3/	0.00	0.00	0.00	450	450	334	0	796.929	0.000	0.50070	0.00000	0.00000
EX-01.5C-06E	1	12.750	0	0.330	0.431	0.000	0.000	0.000	1.50	90	0.00	A-213/TP304TP3/	0.00	0.00	0.00	450	450	334	0	796.929	0.000	0.50070	0.00000	0.00000
EX-01.5C-07E	4	12.750	0	0.330	0.416	0.000	0.000	0.000	1.50	90	0.00	A-213/TP304TP3/	0.00	0.00	0.00	450	450	334	0	796.929	0.000	0.50100	0.00000	0.00000
EX-01.5C-08P	54	12.750	0	0.330	0.356	0.000	0.000	0.000	0.00	0	0.00	A-213/TP304TP3/	0.00	0.00	0.00	450	450	334	0	796.929	0.000	0.50070	0.00000	0.00000
EX-01.5C-09V	22	12.750	0	0.330	0.330	0.000	0.000	0.000	0.00	0	0.00	A216/WCBWCB/	0.00	0.00	0.00	450	450	334	0	796.929	0.000	0.50070	0.00000	0.00000
EX-01.5C-10P	58	12.750	0	0.330	0.358	0.000	0.000	0.000	0.00	0	0.00	A-213/TP304TP3/	0.00	0.00	0.00	450	450	334	0	796.929	0.000	0.50070	0.00000	0.00000
EX-01.5C-11E	2	12.750	0	0.330	0.448	0.000	0.000	0.000	1.50	90	0.00	A-213/TP304TP3/	0.00	0.00	0.00	450	450	334	0	796.929	0.000	0.50070	0.00000	0.00000
EX-01.5C-15P	52	12.750	0	0.330	0.337	0.000	0.000	0.000	0.00	90	0.00	A-213/TP304TP3/	0.00	0.00	0.00	450	450	334	0	796.929	0.000	0.50100	0.00000	0.00000
EX-01.5C-12E	4	12.750	0	0.330	0.485	0.000	0.000	0.000	1.00	90	0.00	A-213/TP304TP3/	0.00	0.00	0.00	450	450	334	0	796.929	0.000	0.50070	0.00000	0.00000
EX-01.5C-13N	30	12.750	0	0.330	0.309	0.000	0.000	0.000	0.00	90	0.00	A-213/TP304TP3/	0.00	0.00	0.00	450	450	334	0	796.929	0.000	0.50070	0.00000	0.00000
Line Name : EX-02.1 PSEP 2A 10" to 35 HDR																								
EX-02.1-01N	31	10.750	40	0.365	0.365	0.000	0.000	0.000	0.00	90	0.00	A240/TP321/	0.00	0.00	0.00	250	400	171	0	1158.300	0.000	0.08600	0.00000	0.00000
EX-02.1-02P	61	10.750	40	0.365	0.378	0.000	0.000	0.000	0.00	90	0.00	SA-21/TP304TP3/	0.00	0.00	0.00	250	400	171	0	1158.300	0.000	0.08600	0.00000	0.00000
EX-02.1-03E	4	10.750	40	0.365	0.425	0.000	0.000	0.000	1.50	90	0.00	SA-21/TP304TP3/	0.00	0.00	0.00	250	400	171	0	1158.300	0.000	0.08600	0.00000	0.00000
EX-02.1-04P	54	10.750	40	0.365	0.365	0.000	0.000	0.000	0.00	90	0.00	SA-21/TP304TP3/	0.00	0.00	0.00	250	400	171	0	1158.300	0.000	0.08600	0.00000	0.00000
EX-02.1-05O	6	10.750	40	0.365	0.365	0.000	0.000	0.000	0.00	90	0.00	SA-21/TP304TP3/	0.00	0.00	0.00	250	400	171	0	1158.300	0.000	0.08600	0.00000	0.00000
EX-02.5-01P	60	18.000	XS	0.500	0.500	0.000	0.000	0.000	0.00	180	0.00	SA-21/TP304TP3/	0.00	0.00	0.00	250	400	171	0	1158.300	0.000	0.08650	0.00000	0.00000
Line Name : EX-02.6 PSEP 1A&2A to 35 HDR																								
EX-02.2-07T	12	18.000	XS	0.500	0.500	0.000	10.750	0.365	0.00	90	0.00	SA-21/TP304TP3/	0.00	0.00	0.00	250	400	171	0	1158.300	0.000	0.08650	0.17300	0.08650
Line Name : EX-02.11 PSEP1B 14" to 35 HDR																								
EX-02.11-02P	64	14.000	0	0.375	0.375	0.000	0.000	0.000	0.00	135	0.00	SA-21/TP304TP3/	0.00	0.00	0.00	250	400	171	0	1192.180	0.000	0.29200	0.00000	0.00000
EX-02.11-03E	4	14.000	0	0.375	0.375	0.000	0.000	0.000	1.50	90	0.00	SA-21/TP304TP3/	0.00	0.00	0.00	250	400	171	0	1192.180	0.000	0.29200	0.00000	0.00000
EX-02.11-04P	54	14.000	0	0.375	0.375	0.000	0.000	0.000	0.00	90	0.00	SA-21/TP304TP3/	0.00	0.00	0.00	250	400	171	0	1192.180	0.000	0.29200	0.00000	0.00000
EX-02.11-06O	6	14.000	0	0.375	0.375	0.000	0.000	0.000	0.00	90	0.00	SA-21/TP304TP3/	0.00	0.00	0.00	250	400	171	0	1192.180	0.000	0.29200	0.00000	0.00000
EX-02.11-07P	56	14.000	0	0.375	0.000	0.000	0.000	0.000	0.00	90	0.00	SA-21/TP304TP3/	0.00	0.00	0.00	250	400	171	0	1192.180	0.000	0.29200	0.00000	0.00000

Component Name	Geom Code	Pipe Size OD (in)	Sch.	Tnom (in)	Tinit (in)	Tcrit (in)	Br/Small End OD (in)	Br/Small Tnom (in)	R / D Ratio	Orient Angle (Deg.)	Pipe Length (in)	Spec/Type/ Class	Material Cr. (%)	Cu. (%)	Mo. (%)	Design Press. (psig)	Design Temp. (Deg. F)	Op. Press. (psig)	Op. Temp. (Deg. F)	Op. Enth. (Btu/lbm)	Op. Qual.	Flow Rate U/S Mn. (Mlbm/hr)	D/S Mn. (Mlbm/hr)	Br.
Line Name : EX-02.12 PSEP 1B&2B to 35 HDR																								
EX-02.12-01P	62	18.000	XS	0.500	0.500	0.000	0.000	0.000	0.00	180	0.00	SA-21/TP304TP3/	0.00	0.00	0.00	250	400	171	0	1158.300	0.000	0.17300	0.00000	0.00000
Line Name : EX-02.13 PSEP 1B&2B to 35 HDR																								
EX-02.11-05T	12	18.000	XS	0.500	0.500	0.000	14.000	0.375	0.00	90	0.00	SA-21/TP304TP3/	0.00	0.00	0.00	250	400	171	0	1179.570	0.000	0.17300	0.46500	0.29200
EX-02.13-01P	62	18.000	XS	0.500	0.500	0.000	0.000	0.000	0.00	180	0.00	SA-21/TP304TP3/	0.00	0.00	0.00	250	400	171	0	1179.580	0.000	0.46500	0.00000	0.00000
EX-02.13-02B	1	18.000	XS	0.500	0.500	0.000	0.000	0.000	1.50	90	0.00	SA-21/TP304TP3/	0.00	0.00	0.00	250	400	171	0	1179.580	0.000	0.46500	0.00000	0.00000
EX-02.13-03E	4	18.000	XS	0.500	0.375	0.000	0.000	0.000	1.00	90	0.00	SA-21/TP304TP3/	0.00	0.00	0.00	250	400	171	0	1179.580	0.000	0.46500	0.00000	0.00000
EX-02.13-03P	54	18.000	XS	0.500	0.000	0.000	0.000	0.000	0.00	135	0.00	SA-21/TP304TP3/	0.00	0.00	0.00	250	400	171	0	1179.580	0.000	0.46500	0.00000	0.00000
EX-02.13-04E	3	18.000	XS	0.500	0.375	0.000	0.000	0.000	1.00	90	0.00	SA-21/TP304TP3/	0.00	0.00	0.00	250	400	171	0	1179.580	0.000	0.46500	0.00000	0.00000
EX-02.13-05P	53	18.000	XS	0.500	0.375	0.000	0.000	0.000	0.00	90	0.00	SA-21/TP304TP3/	0.00	0.00	0.00	250	400	171	0	1179.580	0.000	0.46500	0.00000	0.00000
EX-02.13-06R	18	28.000	0	0.375	0.000	0.000	18.000	0.312	0.00	90	0.00	A234/WP22WP2/	0.00	0.00	0.00	250	400	171	0	1179.580	0.000	0.46500	0.46500	0.00000
Line Name : EX-02.14 FWH 35 HEADER																								
EX-02.7-02T	12	28.000	0	0.375	0.375	0.000	18.000	0.375	0.00	90	0.00	A691/EFW22/	0.00	0.00	0.00	250	400	171	0	1179.610	0.000	0.46400	0.92900	0.46500
EX-02.14-01P	62	28.000	0	0.375	0.375	0.000	0.000	0.000	0.00	90	0.00	A155/C552/	0.00	0.00	0.00	250	400	171	0	1179.610	0.000	0.92900	0.00000	0.00000
EX-02.14-02E	2	28.000	0	0.375	0.375	0.000	0.000	0.000	1.50	90	0.00	A234/WPBWPB/	0.00	0.00	0.00	250	400	171	0	1179.610	0.000	0.92900	0.00000	0.00000
EX-02.14-03P	52	28.000	0	0.375	0.375	0.000	0.000	0.000	0.00	90	0.00	A155/C552/	0.00	0.00	0.00	250	400	171	0	1179.610	0.000	0.92900	0.00000	0.00000
EX-02.14-04T	15	28.000	0	0.375	0.375	0.000	6.625	0.280	0.00	90	0.00	A155/C552/	0.00	0.00	0.00	250	400	171	0	1179.610	0.000	0.92900	0.92900	0.00000
EX-02.14-05P	65	28.000	0	0.375	0.375	0.000	0.000	0.000	0.00	90	0.00	A155/C552/	0.00	0.00	0.00	250	400	171	0	1179.610	0.000	0.92900	0.00000	0.00000
EX-02.14-06E	2	28.000	0	0.375	0.375	0.000	0.000	0.000	1.50	90	0.00	A234/WPBWPB/	0.00	0.00	0.00	250	400	171	0	1179.590	0.000	0.92900	0.00000	0.00000
EX-02.14-07P	52	28.000	0	0.375	0.375	0.000	0.000	0.000	0.00	0	0.00	A155/C552/	0.00	0.00	0.00	250	400	171	0	1179.610	0.000	0.92900	0.00000	0.00000
EX-02.14-08E	2	28.000	0	0.375	0.375	0.000	0.000	0.000	1.50	90	0.00	A234/WPBWPB/	0.00	0.00	0.00	250	400	171	0	1179.610	0.000	0.92900	0.00000	0.00000
EX-02.14-09P	52	28.000	0	0.375	0.375	0.000	0.000	0.000	0.00	90	0.00	A155/C552/	0.00	0.00	0.00	250	400	171	0	1179.610	0.000	0.92900	0.00000	0.00000
EX-02.14-10V	22	28.000	0	0.375	0.375	0.000	0.000	0.000	0.00	90	0.00	A216/WCBWCB/	0.00	0.00	0.00	250	400	171	0	1179.610	0.000	0.92900	0.00000	0.00000
EX-02.14-11V	25	28.000	0	0.375	0.375	0.000	0.000	0.000	0.00	90	0.00	A216/WCBWCB/	0.00	0.00	0.00	250	400	171	0	1179.610	0.000	0.92900	0.00000	0.00000
EX-02.14-12P	58	28.000	0	0.375	0.375	0.000	0.000	0.000	0.00	90	0.00	A155/C552/	0.00	0.00	0.00	250	400	171	0	1179.610	0.000	0.92900	0.00000	0.00000
EX-02.14-13V	25	28.000	0	0.375	0.375	0.000	0.000	0.000	0.00	90	0.00	A216/WCBWCB/	0.00	0.00	0.00	250	400	171	0	1179.610	0.000	0.92900	0.00000	0.00000
EX-02.14-31P	58	28.000	0	0.375	0.375	0.000	0.000	0.000	0.00	90	0.00	A155/C552/	0.00	0.00	0.00	250	400	171	0	1179.610	0.000	0.92900	0.00000	0.00000
EX-02.14-14E	3	28.000	0	0.375	0.375	0.000	0.000	0.000	1.50	90	0.00	A234/WPBWPB/	0.00	0.00	0.00	250	400	171	0	1179.600	0.000	0.92900	0.00000	0.00000
EX-02.14-32T	15	28.000	0	0.375	0.375	0.000	10.750	0.250	0.00	90	0.00	A155/C552/	0.00	0.00	0.00	250	400	171	0	1179.610	0.000	0.92900	0.92900	0.00000
EX-02.14-16E	2	28.000	0	0.375	0.375	0.000	0.000	0.000	1.00	90	0.00	A234/WPBWPB/	0.00	0.00	0.00	250	400	171	0	1179.610	0.000	0.92900	0.00000	0.00000
EX-02.14-17P	52	28.000	0	0.375	0.375	0.000	0.000	0.000	0.00	180	0.00	A155/C552/	0.00	0.00	0.00	250	400	171	0	1179.610	0.000	0.92900	0.00000	0.00000
EX-02.14-18E	2	28.000	0	0.375	0.375	0.000	0.000	0.000	1.00	90	0.00	A234/WPBWPB/	0.00	0.00	0.00	250	400	171	0	1179.610	0.000	0.92900	0.00000	0.00000
EX-02.14-19P	52	28.000	0	0.375	0.375	0.000	0.000	0.000	0.00	90	0.00	A155/C552/	0.00	0.00	0.00	250	400	171	0	1179.610	0.000	0.92900	0.00000	0.00000
EX-02.14-20E	4	28.000	0	0.375	0.375	0.000	0.000	0.000	1.00	90	0.00	A234/WPBWPB/	0.00	0.00	0.00	250	400	171	0	1179.610	0.000	0.92900	0.00000	0.00000
EX-02.14-21P	54	28.000	0	0.375	0.375	0.000	0.000	0.000	0.00	90	0.00	A155/C552/	0.00	0.00	0.00	250	400	171	0	1179.610	0.000	0.92900	0.00000	0.00000
EX-02.14-33P	9	28.000	0	0.375	0.375	0.000	0.000	0.000	0.00	90	0.00	A691/EFW22/	0.00	0.00	0.00	250	400	171	0	1179.600	0.000	0.92900	0.00000	0.00000
EX-02.14-22T	15	28.000	0	0.375	0.375	0.000	6.625	0.280	0.00	90	0.00	A691/EFW22/	0.00	0.00	0.00	250	400	171	0	1179.610	0.000	0.92900	0.92900	0.00000
EX-02.14-23P	65	28.000	0	0.375	0.375	0.000	0.000	0.000	0.00	90	0.00	A691/EFW22/	0.00	0.00	0.00	250	400	171	0	1179.610	0.000	0.92900	0.00000	0.00000
EX-02.14-24E	2	28.000	0	0.375	0.375	0.000	0.000	0.000	1.00	90	0.00	A234/WPBWPB/	0.00	0.00	0.00	250	400	171	0	1179.610	0.000	0.92900	0.00000	0.00000
EX-02.14-25E	4	28.000	0	0.375	0.375	0.000	0.000	0.000	1.00	90	0.00	A234/WPBWPB/	0.00	0.00	0.00	250	400	171	0	1179.610	0.000	0.92900	0.00000	0.00000
EX-02.14-26P	54	28.000	0	0.375	0.375	0.000	0.000	0.000	0.00	0	0.00	A155/C552/	0.00	0.00	0.00	250	400	171	0	1179.560	0.000	0.92900	0.00000	0.00000
EX-02.14-27E	2	28.000	0	0.375	0.000	0.000	0.000	0.000	1.00	90	0.00	A234/WPBWPB/	0.00	0.00	0.00	250	400	171	0	1179.580	0.000	0.92900	0.00000	0.00000
EX-02.14-28P	52	28.000	0	0.375	0.375	0.000	0.000	0.000	0.00	90	0.00	A691/EFW22/	0.00	0.00	0.00	250	400	171	0	1179.560	0.000	0.92900	0.00000	0.00000
EX-02.14-29T	14	28.000	0	0.375	0.375	0.000	18.000	0.375	0.00	90	0.00	A691/EFW22/	0.00	0.00	0.00	250	400	171	0	1179.610	0.000	0.92900	0.61900	0.31000
Line Name : EX-02.15 FWH 35 HEADER																								
EX-02.15-01P	64	28.000	0	0.375	0.625	0.000	0.000	0.000	0.00	90	0.00	A691/EFW22/	0.00	0.00	0.00	250	400	171	0	1179.580	0.000	0.61900	0.00000	0.00000
EX-02.15-02T	14	28.000	0	0.375	0.656	0.000	18.000	0.375	0.00	90	0.00	A691/EFW22/	0.00	0.00	0.00	250	400	171	0	1179.580	0.000	0.61900	0.30900	0.31000
Line Name : EX-02.16 HDR 35 to FWH 35A																								
EX-02.19-01P	64	28.000	0	0.375	0.375	0.000	0.000	0.000	0.00	90	0.00	A691/EFW22/	0.00	0.00	0.00	250	400	171	0	1179.560	0.000	0.31000	0.00000	0.00000
EX-02.16-01R	7	28.000	0	0.375	0.000	0.000	18.000	0.312	0.00	90	0.00	A234/WP22WP2/	0.00	0.00	0.00	250	400	171	0	1179.610	0.000	0.31000	0.31000	0.00000
EX-02.16-02P	57	18.000	0	0.375	0.284	0.000	0.000	0.000	0.00	90	0.00	A335/P22P22/	0.00	0.00	0.00	250	400	171	0	1179.560	0.000	0.31000	0.00000	0.00000

Component Name	Geom Code	Pipe Size OD (in)	Sch.	Tnom (in)	Tinit (in)	Tcrit (in)	Br/Small End OD (in)	Br/Small Tnom (in)	R / D Ratio	Orient Angle (Deg.)	Pipe Length (in)	Spec/Type/ Class	Material Cr. (%)	Cu. (%)	Mo. (%)	Design Press. (psig)	Design Temp. (Deg. F)	Op. Press. (psig)	Op. Temp. (Deg. F)	Op. Enth. (Btu/lbm)	Op. Qual.	Flow Rate U/S Mn. (Mlbm/hr)	D/S Mn. (Mlbm/hr)	Br.
EX-02.16-03E	2	18.000	0	0.375	0.455	0.000	0.000	0.000	1.50	90	0.00	A234/WP22WP2/	0.00	0.00	0.00	250	400	171	0	1179.580	0.000	0.31000	0.00000	0.00000
EX-02.16-04P	52	18.000	0	0.375	0.346	0.000	0.000	0.000	0.00	0	0.00	A335/P22P22/	0.00	0.00	0.00	250	400	171	0	1179.580	0.000	0.31000	0.00000	0.00000
EX-02.16-05V	22	18.000	20	0.312	0.312	0.000	0.000	0.000	0.00	0	0.00	A216/WCBWCB/	0.00	0.00	0.00	250	400	171	0	1179.610	0.000	0.31000	0.00000	0.00000
EX-02.16-06E	4	18.000	0	0.375	0.000	0.000	0.000	0.000	1.50	90	0.00	A234/WP22WP2/	0.00	0.00	0.00	250	400	171	0	1179.560	0.000	0.31000	0.00000	0.00000
EX-02.16-07P	54	18.000	0	0.375	0.380	0.000	0.000	0.000	0.00	90	0.00	A335/P22P22/	0.00	0.00	0.00	250	400	171	0	1179.560	0.000	0.31000	0.00000	0.00000
EX-02.16-08E	2	18.000	20	0.312	0.924	0.000	0.000	0.000	1.00	90	0.00	A234/WPBWPB/	0.00	0.00	0.00	250	400	171	0	1179.560	0.000	0.31000	0.00000	0.00000
EX-02.16-09N	30	18.000	20	0.312	0.293	0.000	0.000	0.000	0.00	90	0.00	A234/WPBWPB/	0.00	0.00	0.00	250	400	171	0	1179.610	0.000	0.31000	0.00000	0.00000
Line Name : EX-02.17 HDR 35 to FWH 35B																								
EX-02.17-01P	64	18.000	0	0.375	0.375	0.000	0.000	0.000	0.00	0	0.00	A691/EFW22/	0.00	0.00	0.00	250	400	171	0	1179.610	0.000	0.31000	0.00000	0.00000
EX-02.17-02V	22	18.000	20	0.312	0.312	0.000	0.000	0.000	0.00	0	0.00	A216/WCBWCB/	0.00	0.00	0.00	250	400	171	0	1179.610	0.000	0.31000	0.00000	0.00000
EX-02.17-03E	4	18.000	0	0.375	0.375	0.000	0.000	0.000	1.50	90	0.00	A234/WP22WP2/	0.00	0.00	0.00	250	400	171	0	1179.560	0.000	0.31000	0.00000	0.00000
EX-02.17-04P	54	18.000	0	0.375	0.378	0.000	0.000	0.000	0.00	90	0.00	A335/P22P22/	0.00	0.00	0.00	250	400	171	0	1179.560	0.000	0.31000	0.00000	0.00000
EX-02.17-05E	2	18.000	20	0.312	0.968	0.000	0.000	0.000	1.00	90	0.00	A234/WPBWPB/	0.00	0.00	0.00	250	400	171	0	1179.560	0.000	0.31000	0.00000	0.00000
EX-02.17-06N	30	18.000	20	0.312	0.293	0.000	0.000	0.000	0.00	90	0.00	A234/WPBWPB/	0.00	0.00	0.00	250	400	171	0	1179.600	0.000	0.31000	0.00000	0.00000
Line Name : EX-02.18 HDR 35 to FWH 35C																								
EX-02.18-01P	64	18.000	0	0.375	0.375	0.000	0.000	0.000	0.00	0	0.00	A691/EFW22/	0.00	0.00	0.00	250	400	171	0	1179.610	0.000	0.31000	0.00000	0.00000
EX-02.18-02V	22	18.000	20	0.312	0.312	0.000	0.000	0.000	0.00	0	0.00	A216/WCBWCB/	0.00	0.00	0.00	250	400	171	0	1179.610	0.000	0.31000	0.00000	0.00000
EX-02.18-03E	4	18.000	0	0.375	0.375	0.000	0.000	0.000	1.50	90	0.00	A234/WP22WP2/	0.00	0.00	0.00	250	400	171	0	1179.560	0.000	0.31000	0.00000	0.00000
EX-02.18-04P	54	18.000	0	0.375	0.375	0.000	0.000	0.000	0.00	90	0.00	A691/EFW22/	0.00	0.00	0.00	250	400	171	0	1179.560	0.000	0.31000	0.00000	0.00000
EX-02.18-05E	2	18.000	20	0.312	0.312	0.000	0.000	0.000	1.00	90	0.00	A234/WPBWPB/	0.00	0.00	0.00	250	400	171	0	1179.590	0.000	0.31000	0.00000	0.00000
EX-02.18-06N	30	18.000	20	0.312	0.293	0.000	0.000	0.000	0.00	90	0.00	A234/WPBWPB/	0.00	0.00	0.00	250	400	171	0	1179.610	0.000	0.31000	0.00000	0.00000
Line Name : EX-02.2 PSEP 1A 10" to 35 HDR																								
EX-02.2-01N	31	10.750	40	0.365	0.365	0.000	0.000	0.000	0.00	90	0.00	A240/TP321/	0.00	0.00	0.00	250	400	171	0	1158.300	0.000	0.08600	0.00000	0.00000
EX-02.2-02P	61	10.750	40	0.365	0.365	0.000	0.000	0.000	0.00	90	0.00	SA-21/TP304TP3/	0.00	0.00	0.00	250	400	171	0	1158.300	0.000	0.08600	0.00000	0.00000
EX-02.2-03E	2	10.750	40	0.365	0.365	0.000	0.000	0.000	1.50	90	0.00	SA-21/TP304TP3/	0.00	0.00	0.00	250	400	171	0	1158.300	0.000	0.08600	0.00000	0.00000
EX-02.2-04P	52	10.750	40	0.365	0.365	0.000	0.000	0.000	0.00	117	0.00	SA-21/TP304TP3/	0.00	0.00	0.00	250	400	171	0	1158.300	0.000	0.08600	0.00000	0.00000
EX-02.2-05E	2	10.750	40	0.365	0.365	0.000	0.000	0.000	1.50	90	0.00	SA-21/TP304TP3/	0.00	0.00	0.00	250	400	171	0	1158.300	0.000	0.08600	0.00000	0.00000
EX-02.2-06P	52	10.750	40	0.365	0.365	0.000	0.000	0.000	0.00	90	0.00	SA-21/TP304TP3/	0.00	0.00	0.00	250	400	171	0	1158.300	0.000	0.08600	0.00000	0.00000
EX-02.2-08O	6	10.750	40	0.365	0.365	0.000	0.000	0.000	0.00	90	0.00	SA-21/TP304TP3/	0.00	0.00	0.00	250	400	171	0	1158.300	0.000	0.08600	0.00000	0.00000
Line Name : EX-02.4 PSEP2A 14" to 35 HDR																								
EX-02.4-02P	64	14.000	0	0.375	0.375	0.000	0.000	0.000	0.00	129	0.00	SA-21/TP304TP3/	0.00	0.00	0.00	250	400	171	0	1192.180	0.000	0.29200	0.00000	0.00000
EX-02.4-03E	4	14.000	0	0.375	0.375	0.000	0.000	0.000	1.50	90	0.00	SA-21/TP304TP3/	0.00	0.00	0.00	250	400	171	0	1192.180	0.000	0.29200	0.00000	0.00000
EX-02.4-04P	54	14.000	0	0.375	0.375	0.000	0.000	0.000	0.00	90	0.00	SA-21/TP304TP3/	0.00	0.00	0.00	250	400	171	0	1192.180	0.000	0.29200	0.00000	0.00000
EX-02.4-06O	6	14.000	0	0.375	0.375	0.000	0.000	0.000	0.00	90	0.00	SA-21/TP304TP3/	0.00	0.00	0.00	250	400	171	0	1192.180	0.000	0.29200	0.00000	0.00000
EX-02.4-07P	56	14.000	0	0.375	0.000	0.000	0.000	0.000	0.00	90	0.00	SA-21/TP304TP3/	0.00	0.00	0.00	250	400	171	0	1192.180	0.000	0.29200	0.00000	0.00000
Line Name : EX-02.6 PSEP 1A&2A to 35 HDR																								
EX-02.6-01P	62	18.000	XS	0.500	0.500	0.000	0.000	0.000	0.00	180	0.00	SA-21/TP304TP3/	0.00	0.00	0.00	250	400	171	0	1158.300	0.000	0.17300	0.00000	0.00000
Line Name : EX-02.7 PSEP 1A&2A to 35 HDR																								
EX-02.4-05T	12	18.000	XS	0.500	0.500	0.000	14.000	0.375	0.00	90	0.00	SA-21/TP304TP3/	0.00	0.00	0.00	250	400	171	0	1179.580	0.000	0.17300	0.46500	0.29200
EX-02.7-01P	62	18.000	XS	0.500	0.500	0.000	0.000	0.000	0.00	180	0.00	SA-21/TP304TP3/	0.00	0.00	0.00	250	400	171	0	1179.580	0.000	0.46500	0.00000	0.00000
Line Name : EX-02.8 PSEP 2B 10" to 35 HDR																								
EX-02.8-01N	31	10.750	40	0.365	0.365	0.000	0.000	0.000	0.00	90	0.00	A240/TP321/	0.00	0.00	0.00	250	400	171	0	1158.300	0.000	0.08600	0.00000	0.00000
EX-02.8-02E	3	10.750	40	0.365	0.365	0.000	0.000	0.000	1.50	90	0.00	SA-21/TP304TP3/	0.00	0.00	0.00	250	400	171	0	1158.300	0.000	0.08600	0.00000	0.00000
EX-02.8-03P	53	10.750	40	0.365	0.365	0.000	0.000	0.000	0.00	113	0.00	SA-21/TP304TP3/	0.00	0.00	0.00	250	400	171	0	1158.300	0.000	0.08600	0.00000	0.00000
EX-02.8-04E	1	10.750	40	0.365	0.365	0.000	0.000	0.000	1.50	90	0.00	SA-21/TP304TP3/	0.00	0.00	0.00	250	400	171	0	1158.300	0.000	0.08600	0.00000	0.00000

Component Name	Geom Code	Pipe Size OD (in)	Sch.	Tnom (in)	Tinit (in)	Tcrit (in)	Br/Small End OD (in)	Br/Small Tnom (in)	R / D Ratio	Orient Angle (Deg.)	Pipe Length (in)	Spec/Type/ Class	Material Cr. (%)	Cu. (%)	Mo. (%)	Design Press. (psig)	Design Temp. (Deg. F)	Op. Press. (psig)	Op. Temp. (Deg. F)	Op. Enth. (Btu/lbm)	Op. Qual.	Flow Rate U/S Mn. (Mlbm/hr)	D/S Mn. (Mlbm/hr)	Br.
EX-02.8-05P	51	10.750	40	0.365	0.365	0.000	0.000	0.000	0.00	90	0.00	SA-21/TP304TP3/	0.00	0.00	0.00	250	400	171	0	1158.300	0.000	0.08600	0.00000	0.00000
EX-02.8-07O	6	10.750	40	0.365	0.365	0.000	0.000	0.000	0.00	90	0.00	SA-21/TP304TP3/	0.00	0.00	0.00	250	400	171	0	1158.300	0.000	0.08600	0.00000	0.00000
EX-02.8-06E	3	10.750	40	0.365	0.365	0.000	0.000	0.000	1.50	90	0.00	SA-21/TP304TP3/	0.00	0.00	0.00	250	400	171	0	1158.300	0.000	0.08600	0.00000	0.00000
EX-02.8-09P	53	10.750	40	0.365	0.000	0.000	0.000	0.000	0.00	90	0.00	SA-21/TP304TP3/	0.00	0.00	0.00	250	400	171	0	1158.300	0.000	0.08600	0.00000	0.00000
Line Name : EX-02.12 PSEP 1B&2B to 35 HDR																								
EX-02.9-10T	12	18.000	XS	0.500	0.500	0.000	10.750	0.365	0.00	90	0.00	SA-21/TP304TP3/	0.00	0.00	0.00	250	400	171	0	1158.300	0.000	0.08650	0.17300	0.08650
Line Name : EX-02.9 PSEP 1B 10" to 35 HDR																								
EX-02.9-01N	31	10.750	40	0.365	0.365	0.000	0.000	0.000	0.00	90	0.00	A240/TP321/	0.00	0.00	0.00	250	400	171	0	1158.300	0.000	0.08600	0.00000	0.00000
EX-02.9-02P	61	10.750	40	0.365	0.365	0.000	0.000	0.000	0.00	90	0.00	SA-21/TP304TP3/	0.00	0.00	0.00	250	400	171	0	1158.300	0.000	0.08600	0.00000	0.00000
EX-02.9-03E	2	10.750	40	0.365	0.365	0.000	0.000	0.000	1.50	90	0.00	SA-21/TP304TP3/	0.00	0.00	0.00	250	400	171	0	1158.300	0.000	0.08600	0.00000	0.00000
EX-02.9-04P	52	10.750	40	0.365	0.365	0.000	0.000	0.000	0.00	150	0.00	SA-21/TP304TP3/	0.00	0.00	0.00	250	400	171	0	1158.300	0.000	0.08600	0.00000	0.00000
EX-02.9-05E	2	10.750	40	0.365	0.365	0.000	0.000	0.000	1.50	90	0.00	SA-21/TP304TP3/	0.00	0.00	0.00	250	400	171	0	1158.300	0.000	0.08600	0.00000	0.00000
EX-02.9-06P	52	10.750	40	0.365	0.365	0.000	0.000	0.000	0.00	90	0.00	SA-21/TP304TP3/	0.00	0.00	0.00	250	400	171	0	1158.300	0.000	0.08600	0.00000	0.00000
EX-02.9-11O	6	10.750	40	0.365	0.365	0.000	0.000	0.000	0.00	90	0.00	SA-21/TP304TP3/	0.00	0.00	0.00	250	400	171	0	1158.300	0.000	0.08600	0.00000	0.00000
EX-02.9-07E	4	10.750	40	0.365	0.365	0.000	0.000	0.000	1.50	90	0.00	SA-21/TP304TP3/	0.00	0.00	0.00	250	400	171	0	1158.300	0.000	0.08600	0.00000	0.00000
EX-02.9-08P	54	10.750	40	0.365	0.365	0.000	0.000	0.000	0.00	90	0.00	SA-21/TP304TP3/	0.00	0.00	0.00	250	400	171	0	1158.300	0.000	0.08600	0.00000	0.00000
EX-02.9-09E	4	10.750	40	0.365	0.365	0.000	0.000	0.000	1.50	90	0.00	SA-21/TP304TP3/	0.00	0.00	0.00	250	400	171	0	1158.300	0.000	0.08600	0.00000	0.00000
EX-02.9-10P	54	10.750	40	0.365	0.000	0.000	0.000	0.000	0.00	0	0.00	SA-21/TP304TP3/	0.00	0.00	0.00	250	400	171	0	1158.300	0.000	0.08600	0.00000	0.00000
Line Name : EX-03.1A LP EXT 12 to FWH 34A																								
EX-03.1A-01N	31	20.000	0	0.250	0.400	0.000	0.000	0.000	0.00	90	0.00	A516/6060/	0.00	0.00	0.00	100	400	50	0	1177.400	0.000	0.16760	0.00000	0.00000
EX-03.1A-02P	61	20.000	0	0.250	0.250	0.000	0.000	0.000	0.00	180	0.00	A53/BS/	0.00	0.00	0.00	100	400	50	0	1177.400	0.000	0.16760	0.00000	0.00000
EX-03.1A-03E	2	20.000	0	0.250	0.250	0.000	0.000	0.000	1.50	90	0.00	A234/WPBWPB/	0.00	0.00	0.00	100	400	50	0	1177.400	0.000	0.16760	0.00000	0.00000
EX-03.1A-42X	6	20.000	0	0.250	0.250	0.000	0.000	0.000	0.00	90	18.00	A53/BS/	0.00	0.00	0.00	100	400	50	0	1177.400	0.000	0.16760	0.00000	0.00000
EX-03.1A-04P	56	20.000	0	0.250	0.250	0.000	0.000	0.000	0.00	90	0.00	A53/BS/	0.00	0.00	0.00	100	400	50	0	1177.400	0.000	0.16760	0.00000	0.00000
EX-03.1A-05T	15	20.000	0	0.250	0.250	0.000	6.625	0.280	0.00	90	0.00	A53/BS/	0.00	0.00	0.00	100	400	50	0	1177.400	0.000	0.16760	0.16760	0.00000
EX-03.1A-06E	3	20.000	0	0.250	0.250	0.000	0.000	0.000	1.50	90	0.00	A234/WPBWPB/	0.00	0.00	0.00	100	400	50	0	1177.400	0.000	0.16760	0.00000	0.00000
EX-03.1A-07E	3	20.000	0	0.250	0.250	0.000	0.000	0.000	1.50	90	0.00	A234/WPBWPB/	0.00	0.00	0.00	100	400	50	0	1177.400	0.000	0.16760	0.00000	0.00000
EX-03.1A-40P	53	20.000	0	0.250	0.250	0.000	0.000	0.000	0.00	90	0.00	A53/BS/	0.00	0.00	0.00	100	400	50	0	1177.400	0.000	0.16760	0.00000	0.00000
EX-03.1A-08V	22	20.000	0	0.250	0.250	0.000	0.000	0.000	0.00	90	0.00	A216/WCBWCB/	0.00	0.00	0.00	100	400	50	0	1177.400	0.000	0.16760	0.00000	0.00000
EX-03.1A-09P	58	20.000	0	0.250	0.250	0.000	0.000	0.000	0.00	90	0.00	A53/BS/	0.00	0.00	0.00	100	400	50	0	1177.400	0.000	0.16760	0.00000	0.00000
EX-03.1A-10V	25	20.000	0	0.250	0.250	0.000	0.000	0.000	0.00	90	0.00	A216/WCBWCB/	0.00	0.00	0.00	100	400	50	0	1177.400	0.000	0.16760	0.00000	0.00000
EX-03.1A-11P	58	20.000	0	0.250	0.250	0.000	0.000	0.000	0.00	90	0.00	A53/BS/	0.00	0.00	0.00	100	400	50	0	1177.400	0.000	0.16760	0.00000	0.00000
EX-03.1A-12E	1	20.000	0	0.250	0.250	0.000	0.000	0.000	1.50	90	0.00	A234/WPBWPB/	0.00	0.00	0.00	100	400	50	0	1177.400	0.000	0.16760	0.00000	0.00000
EX-03.1A-13P	51	20.000	0	0.250	0.250	0.000	0.000	0.000	0.00	90	0.00	A53/BS/	0.00	0.00	0.00	100	400	50	0	1177.400	0.000	0.16760	0.00000	0.00000
EX-03.1A-14E	4	20.000	0	0.250	0.250	0.000	0.000	0.000	1.00	90	0.00	A234/WPBWPB/	0.00	0.00	0.00	100	400	50	0	1177.400	0.000	0.16760	0.00000	0.00000
EX-03.1A-15P	54	20.000	0	0.250	0.250	0.000	0.000	0.000	0.00	180	0.00	A53/BS/	0.00	0.00	0.00	100	400	50	0	1177.400	0.000	0.16760	0.00000	0.00000
EX-03.1A-16E	1	20.000	0	0.250	0.250	0.000	0.000	0.000	1.50	90	0.00	A234/WPBWPB/	0.00	0.00	0.00	100	400	50	0	1177.400	0.000	0.16760	0.00000	0.00000
EX-03.1A-17P	51	20.000	0	0.250	0.250	0.000	0.000	0.000	0.00	135	0.00	A53/BS/	0.00	0.00	0.00	100	400	50	0	1177.400	0.000	0.16760	0.00000	0.00000
EX-03.1A-18E	1	20.000	0	0.250	0.250	0.000	0.000	0.000	1.50	90	0.00	A234/WPBWPB/	0.00	0.00	0.00	100	400	50	0	1177.400	0.000	0.16760	0.00000	0.00000
EX-03.1A-20E	4	20.000	0	0.250	0.250	0.000	0.000	0.000	1.00	90	0.00	A234/WPBWPB/	0.00	0.00	0.00	100	400	50	0	1177.400	0.000	0.16760	0.00000	0.00000
EX-03.1A-21P	54	20.000	0	0.250	0.250	0.000	0.000	0.000	0.00	90	0.00	A53/BS/	0.00	0.00	0.00	100	400	50	0	1177.400	0.000	0.16760	0.00000	0.00000
EX-03.1A-22T	15	20.000	0	0.250	0.250	0.000	6.625	0.280	0.00	90	0.00	A53/BS/	0.00	0.00	0.00	100	400	50	0	1177.400	0.000	0.16760	0.16760	0.00000
EX-03.1A-23P	65	20.000	0	0.250	0.250	0.000	0.000	0.000	0.00	90	0.00	A53/BS/	0.00	0.00	0.00	100	400	50	0	1177.400	0.000	0.16760	0.00000	0.00000
EX-03.1A-24E	2	20.000	0	0.250	0.250	0.000	0.000	0.000	1.00	90	0.00	A234/WPBWPB/	0.00	0.00	0.00	100	400	50	0	1177.400	0.000	0.16760	0.00000	0.00000
EX-03.1A-25P	52	20.000	0	0.250	0.250	0.000	0.000	0.000	0.00	0	0.00	A53/BS/	0.00	0.00	0.00	100	400	50	0	1177.400	0.000	0.16760	0.00000	0.00000
EX-03.1A-26E	4	20.000	0	0.250	0.250	0.000	0.000	0.000	1.00	90	0.00	A234/WPBWPB/	0.00	0.00	0.00	100	400	50	0	1177.400	0.000	0.16760	0.00000	0.00000
EX-03.1A-27P	54	20.000	0	0.250	0.250	0.000	0.000	0.000	0.00	90	0.00	A53/BS/	0.00	0.00	0.00	100	400	50	0	1177.400	0.000	0.16760	0.00000	0.00000
EX-03.1A-41P	9	20.000	0	0.250	0.250	0.000	0.000	0.000	0.00	90	0.00	A53/BS/	0.00	0.00	0.00	100	400	50	0	1177.400	0.000	0.16760	0.00000	0.00000
EX-03.1A-28E	2	20.000	0	0.250	0.250	0.000	0.000	0.000	1.00	90	0.00	A234/WPBWPB/	0.00	0.00	0.00	100	400	50	0	1177.400	0.000	0.16760	0.00000	0.00000
EX-03.1A-29P	52	20.000	0	0.250	0.250	0.000	0.000	0.000	0.00	180	0.00	A53/BS/	0.00	0.00	0.00	100	400	50	0	1177.400	0.000	0.16760	0.00000	0.00000
EX-03.1A-30E	4	20.000	0	0.250	0.250	0.000	0.000	0.000	1.00	90	0.00	A234/WPBWPB/	0.00	0.00	0.00	100	400	50	0	1177.400	0.000	0.16760	0.00000	0.00000
EX-03.1A-31P	54	20.000	0	0.250	0.250	0.000	0.000	0.000	0.00	90	0.00	A53/BS/	0.00	0.00	0.00	100	400	50	0	1177.400	0.000	0.16760	0.00000	0.00000
EX-03.1A-32T	15	20.000	0	0.250	0.250	0.000	6.625	0.280	0.00	90	0.00	A53/BS/	0.00	0.00	0.00	100	400	50	0	1177.400	0.000	0.16760	0.16760	0.00000
EX-03.1A-33P	65	20.000	0	0.250	0.250	0.000	0.000	0.000	0.00	90	0.00	A53/BS/	0.00	0.00	0.00	100	400	50	0	1177.400	0.000	0.16760	0.00000	0.00000
EX-03.1A-34E	2	20.000	0	0.250	0.250	0.000	0.000	0.000	1.00	90	0.00	A234/WPBWPB/	0.00	0.00	0.00	100	400	50	0	1177.400	0.000	0.16760	0.00000	0.00000
EX-03.1A-35P	52	20.000	0	0.250	0.249	0.000	0.000	0.000	0.00	0	0.00	A53/BS/	0.00	0.00	0.00	100	400	50	0	1177.400	0.000	0.16760	0.00000	0.00000
EX-03.1A-36E	2	20.000	0	0.250	0.461	0.000	0.000	0.000	1.00	90	0.00	A234/WPBWPB/	0.00	0.00	0.00	100	400	50	0	1177.400	0.000	0.16760	0.00000	0.00000
EX-03.1A-37P	52	20.000	0	0.250	0.253	0.000	0.000	0.000	0.00	90	0.00	A53/BS/	0.00	0.00	0.00	100	400	50	0	1177.400	0.000	0.16760	0.00000	0.00000

Component Name	Geom Code	Pipe Size OD (in)	Sch.	Tnom (in)	Tinit (in)	Tcrit (in)	Br/Small End OD (in)	Br/Small Tnom (in)	R / D Ratio	Orient Angle (Deg.)	Pipe Length (in)	Spec/Type/ Class	Material Cr. (%)	Cu. (%)	Mo. (%)	Design Press. (psig)	Design Temp. (Deg. F)	Op. Press. (psig)	Op. Temp. (Deg. F)	Op. Enth. (Btu/lbm)	Op. Qual.	Flow Rate U/S Mn. (Mlbm/hr)	D/S Mn. (Mlbm/hr)	Br.
EX-03.1A-38E	2	20.000	0	0.250	0.250	0.000	0.000	0.000	1.00	90	0.00	A234/WPBWPB/	0.00	0.00	0.00	100	400	50	0	1177.400	0.000	0.16760	0.00000	0.00000
EX-03.1A-39N	30	20.000	0	0.250	0.250	0.000	0.000	0.000	0.00	90	0.00	A234/WPBWPB/	0.00	0.00	0.00	100	400	50	0	1177.400	0.000	0.16760	0.00000	0.00000
Line Name : EX-03.1B LP EXT 12 to FWH 34B																								
EX-03.1B-01N	31	20.000	0	0.250	0.400	0.000	0.000	0.000	0.00	90	0.00	A516/6060/	0.00	0.00	0.00	100	400	50	0	1177.400	0.000	0.16760	0.00000	0.00000
EX-03.1B-02P	61	20.000	0	0.250	0.250	0.000	0.000	0.000	0.00	180	0.00	A53/BS/	0.00	0.00	0.00	100	400	50	0	1177.400	0.000	0.16760	0.00000	0.00000
EX-03.1B-03E	2	20.000	0	0.250	0.250	0.000	0.000	0.000	1.50	90	0.00	A234/WPBWPB/	0.00	0.00	0.00	100	400	50	0	1177.400	0.000	0.16760	0.00000	0.00000
EX-03.1B-37X	6	20.000	0	0.250	0.250	0.000	0.000	0.000	0.00	90	0.00	A53/BS/	0.00	0.00	0.00	100	400	50	0	1177.400	0.000	0.16760	0.00000	0.00000
EX-03.1B-04P	56	20.000	0	0.250	0.250	0.000	0.000	0.000	0.00	90	0.00	A53/BS/	0.00	0.00	0.00	100	400	50	0	1177.400	0.000	0.16760	0.00000	0.00000
EX-03.1B-05T	15	20.000	0	0.250	0.250	0.000	6.625	0.280	0.00	90	0.00	A53/BS/	0.00	0.00	0.00	100	400	50	0	1177.400	0.000	0.16760	0.16760	0.00000
EX-03.1B-06E	3	20.000	0	0.250	0.250	0.000	0.000	0.000	1.50	90	0.00	A234/WPBWPB/	0.00	0.00	0.00	100	400	50	0	1177.400	0.000	0.16760	0.00000	0.00000
EX-03.1B-07E	3	20.000	0	0.250	0.250	0.000	0.000	0.000	1.50	90	0.00	A234/WPBWPB/	0.00	0.00	0.00	100	400	50	0	1177.400	0.000	0.16760	0.00000	0.00000
EX-03.1B-08P	53	20.000	0	0.250	0.250	0.000	0.000	0.000	0.00	90	0.00	A53/BS/	0.00	0.00	0.00	100	400	50	0	1177.400	0.000	0.16760	0.00000	0.00000
EX-03.1B-09V	22	20.000	0	0.250	0.250	0.000	0.000	0.000	0.00	90	0.00	A216/WCBWCB/	0.00	0.00	0.00	100	400	50	0	1177.400	0.000	0.16760	0.00000	0.00000
EX-03.1B-10P	58	20.000	0	0.250	0.250	0.000	0.000	0.000	0.00	90	0.00	A53/BS/	0.00	0.00	0.00	100	400	50	0	1177.400	0.000	0.16760	0.00000	0.00000
EX-03.1B-11V	25	20.000	0	0.250	0.250	0.000	0.000	0.000	0.00	90	0.00	A216/WCBWCB/	0.00	0.00	0.00	100	400	50	0	1177.400	0.000	0.16760	0.00000	0.00000
EX-03.1B-12P	58	20.000	0	0.250	0.250	0.000	0.000	0.000	0.00	90	0.00	A53/BS/	0.00	0.00	0.00	100	400	50	0	1177.400	0.000	0.16760	0.00000	0.00000
EX-03.1B-13E	2	20.000	0	0.250	0.250	0.000	0.000	0.000	1.00	90	0.00	A234/WPBWPB/	0.00	0.00	0.00	100	400	50	0	1177.400	0.000	0.16760	0.00000	0.00000
EX-03.1B-14P	52	20.000	0	0.250	0.250	0.000	0.000	0.000	0.00	180	0.00	A53/BS/	0.00	0.00	0.00	100	400	50	0	1177.400	0.000	0.16760	0.00000	0.00000
EX-03.1B-15E	2	20.000	0	0.250	0.250	0.000	0.000	0.000	1.00	90	0.00	A234/WPBWPB/	0.00	0.00	0.00	100	400	50	0	1177.400	0.000	0.16760	0.00000	0.00000
EX-03.1B-16P	52	20.000	0	0.250	0.250	0.000	0.000	0.000	0.00	90	0.00	A53/BS/	0.00	0.00	0.00	100	400	50	0	1177.400	0.000	0.16760	0.00000	0.00000
EX-03.1B-17E	2	20.000	0	0.250	0.250	0.000	0.000	0.000	1.00	90	0.00	A234/WPBWPB/	0.00	0.00	0.00	100	400	50	0	1177.400	0.000	0.16760	0.00000	0.00000
EX-03.1B-18P	52	20.000	0	0.250	0.250	0.000	0.000	0.000	0.00	90	0.00	A53/BS/	0.00	0.00	0.00	100	400	50	0	1177.400	0.000	0.16760	0.00000	0.00000
EX-03.1B-19T	15	20.000	0	0.250	0.250	0.000	6.625	0.280	0.00	90	0.00	A53/BS/	0.00	0.00	0.00	100	400	50	0	1177.400	0.000	0.16760	0.16760	0.00000
EX-03.1B-20P	65	20.000	0	0.250	0.250	0.000	0.000	0.000	0.00	90	0.00	A53/BS/	0.00	0.00	0.00	100	400	50	0	1177.400	0.000	0.16760	0.00000	0.00000
EX-03.1B-21E	4	20.000	0	0.250	0.250	0.000	0.000	0.000	1.00	90	0.00	A234/WPBWPB/	0.00	0.00	0.00	100	400	50	0	1177.400	0.000	0.16760	0.00000	0.00000
EX-03.1B-22P	54	20.000	0	0.250	0.250	0.000	0.000	0.000	0.00	0	0.00	A53/BS/	0.00	0.00	0.00	100	400	50	0	1177.400	0.000	0.16760	0.00000	0.00000
EX-03.1B-23E	2	20.000	0	0.250	0.250	0.000	0.000	0.000	1.00	90	0.00	A234/WPBWPB/	0.00	0.00	0.00	100	400	50	0	1177.400	0.000	0.16760	0.00000	0.00000
EX-03.1B-24P	52	20.000	0	0.250	0.250	0.000	0.000	0.000	0.00	90	0.00	A53/BS/	0.00	0.00	0.00	100	400	50	0	1177.400	0.000	0.16760	0.00000	0.00000
EX-03.1B-25E	2	20.000	0	0.250	0.250	0.000	0.000	0.000	1.00	90	0.00	A234/WPBWPB/	0.00	0.00	0.00	100	400	50	0	1177.400	0.000	0.16760	0.00000	0.00000
EX-03.1B-26P	52	20.000	0	0.250	0.250	0.000	0.000	0.000	0.00	180	0.00	A53/BS/	0.00	0.00	0.00	100	400	50	0	1177.400	0.000	0.16760	0.00000	0.00000
EX-03.1B-27E	4	20.000	0	0.250	0.250	0.000	0.000	0.000	1.00	90	0.00	A234/WPBWPB/	0.00	0.00	0.00	100	400	50	0	1177.400	0.000	0.16760	0.00000	0.00000
EX-03.1B-28P	54	20.000	0	0.250	0.250	0.000	0.000	0.000	0.00	90	0.00	A53/BS/	0.00	0.00	0.00	100	400	50	0	1177.400	0.000	0.16760	0.00000	0.00000
EX-03.1B-29T	15	20.000	0	0.250	0.250	0.000	6.625	0.280	0.00	90	0.00	A53/BS/	0.00	0.00	0.00	100	400	50	0	1177.400	0.000	0.16760	0.16760	0.00000
EX-03.1B-30P	65	20.000	0	0.250	0.250	0.000	0.000	0.000	0.00	90	0.00	A53/BS/	0.00	0.00	0.00	100	400	50	0	1177.400	0.000	0.16760	0.00000	0.00000
EX-03.1B-31E	2	20.000	0	0.250	0.250	0.000	0.000	0.000	1.00	90	0.00	A234/WPBWPB/	0.00	0.00	0.00	100	400	50	0	1177.400	0.000	0.16760	0.00000	0.00000
EX-03.1B-32P	52	20.000	0	0.250	0.263	0.000	0.000	0.000	0.00	0	0.00	A53/BS/	0.00	0.00	0.00	100	400	50	0	1177.400	0.000	0.16760	0.00000	0.00000
EX-03.1B-33E	2	20.000	0	0.250	0.431	0.000	0.000	0.000	1.00	90	0.00	A234/WPBWPB/	0.00	0.00	0.00	100	400	50	0	1177.400	0.000	0.16760	0.00000	0.00000
EX-03.1B-34P	52	20.000	0	0.250	0.263	0.000	0.000	0.000	0.00	90	0.00	A53/BS/	0.00	0.00	0.00	100	400	50	0	1177.400	0.000	0.16760	0.00000	0.00000
EX-03.1B-35E	2	20.000	0	0.250	0.250	0.000	0.000	0.000	1.00	90	0.00	A234/WPBWPB/	0.00	0.00	0.00	100	400	50	0	1177.400	0.000	0.16760	0.00000	0.00000
EX-03.1B-36N	30	20.000	0	0.250	0.250	0.000	0.000	0.000	0.00	90	0.00	A234/WPBWPB/	0.00	0.00	0.00	100	400	50	0	1177.400	0.000	0.16760	0.00000	0.00000
Line Name : EX-03.1C LP EXT 12 to FWH 34C																								
EX-03.1C-01N	31	20.000	0	0.250	0.400	0.000	0.000	0.000	0.00	90	0.00	A516/6060/	0.00	0.00	0.00	100	400	50	0	1177.400	0.000	0.16760	0.00000	0.00000
EX-03.1C-02P	61	20.000	0	0.250	0.250	0.000	0.000	0.000	0.00	180	0.00	A53/BS/	0.00	0.00	0.00	100	400	50	0	1177.400	0.000	0.16760	0.00000	0.00000
EX-03.1C-03E	2	20.000	0	0.250	0.250	0.000	0.000	0.000	1.50	90	0.00	A234/WPBWPB/	0.00	0.00	0.00	100	400	50	0	1177.400	0.000	0.16760	0.00000	0.00000
EX-03.1C-41X	6	20.000	0	0.250	0.250	0.000	0.000	0.000	0.00	90	18.00	A53/BS/	0.00	0.00	0.00	100	400	50	0	1177.400	0.000	0.16760	0.00000	0.00000
EX-03.1C-04P	56	20.000	0	0.250	0.250	0.000	0.000	0.000	0.00	90	0.00	A53/BS/	0.00	0.00	0.00	100	400	50	0	1177.400	0.000	0.16760	0.00000	0.00000
EX-03.1C-05T	15	20.000	0	0.250	0.250	0.000	6.625	0.280	0.00	90	0.00	A53/BS/	0.00	0.00	0.00	100	400	50	0	1177.400	0.000	0.16760	0.16760	0.00000
EX-03.1C-06E	3	20.000	0	0.250	0.250	0.000	0.000	0.000	1.50	90	0.00	A234/WPBWPB/	0.00	0.00	0.00	100	400	50	0	1177.400	0.000	0.16760	0.00000	0.00000
EX-03.1C-07E	3	20.000	0	0.250	0.250	0.000	0.000	0.000	1.50	90	0.00	A234/WPBWPB/	0.00	0.00	0.00	100	400	50	0	1177.400	0.000	0.16760	0.00000	0.00000
EX-03.1C-08P	53	20.000	0	0.250	0.250	0.000	0.000	0.000	0.00	90	0.00	A53/BS/	0.00	0.00	0.00	100	400	50	0	1177.400	0.000	0.16760	0.00000	0.00000
EX-03.1C-09V	22	20.000	0	0.250	0.250	0.000	0.000	0.000	0.00	90	0.00	A216/WCBWCB/	0.00	0.00	0.00	100	400	50	0	1177.400	0.000	0.16760	0.00000	0.00000
EX-03.1C-10P	58	20.000	0	0.250	0.250	0.000	0.000	0.000	0.00	90	0.00	A53/BS/	0.00	0.00	0.00	100	400	50	0	1177.400	0.000	0.16760	0.00000	0.00000
EX-03.1C-11V	25	20.000	0	0.250	0.250	0.000	0.000	0.000	0.00	90	0.00	A216/WCBWCB/	0.00	0.00	0.00	100	400	50	0	1177.400	0.000	0.16760	0.00000	0.00000
EX-03.1C-12P	58	20.000	0	0.250	0.250	0.000	0.000	0.000	0.00	90	0.00	A53/BS/	0.00	0.00	0.00	100	400	50	0	1177.400	0.000	0.16760	0.00000	0.00000
EX-03.1C-13E	1	20.000	0	0.250	0.250	0.000	0.000	0.000	1.50	90	0.00	A234/WPBWPB/	0.00	0.00	0.00	100	400	50	0	1177.400	0.000	0.16760	0.00000	0.00000
EX-03.1C-14P	51	20.000	0	0.250	0.250	0.000	0.000	0.000	0.00	90	0.00	A53/BS/	0.00	0.00	0.00	100	400	50	0	1177.400	0.000	0.16760	0.00000	0.00000
EX-03.1C-15E	2	20.000	0	0.250	0.250	0.000	0.000	0.000	1.00	90	0.00	A234/WPBWPB/	0.00	0.00	0.00	100	400	50	0	1177.400	0.000	0.16760	0.00000	0.00000
EX-03.1C-16P	52	20.000	0	0.250	0.250	0.000	0.000	0.000	0.00	180	0.00	A53/BS/	0.00	0.00	0.00	100	400	50	0	1177.400	0.000	0.16760	0.00000	0.00000
EX-03.1C-17E	3	20.000	0	0.250	0.250	0.000	0.000	0.000	1.50	90	0.00	A234/WPBWPB/	0.00	0.00	0.00	100	400	50	0	1177.400	0.000	0.16760	0.00000	0.00000
EX-03.1C-18P	53	20.000	0	0.250	0.250	0.000	0.000	0.000	0.00	135	0.00	A53/BS/	0.00	0.00	0.00	100	400	50	0	1177.400	0.000	0.16760	0.00000	0.00000
EX-03.1C-19E	1	20.000	0	0.250	0.250	0.000	0.000	0.000	1.50	90	0.00	A234/WPBWPB/	0.00	0.00	0.00	100	400	50	0	1177.400	0.000	0.16760	0.00000	0.00000

Component Name	Geom Code	Pipe Size OD (in)	Sch.	Tnom (in)	Tinit (in)	Tcrit (in)	Br/Small End OD (in)	Br/Small Tnom (in)	R / D Ratio	Orient Angle (Deg.)	Pipe Length (in)	Spec/Type/ Class	Material Cr. (%)	Cu. (%)	Mo. (%)	Design Press. (psig)	Design Temp. (Deg. F)	Op. Press. (psig)	Op. Temp. (Deg. F)	Op. Enth. (Btu/lbm)	Op. Qual.	Flow Rate U/S Mn. (Mlbm/hr)	D/S Mn. (Mlbm/hr)	Br.
EX-03.1C-20P	51	20.000	0	0.250	0.250	0.000	0.000	0.000	0.00	90	0.00	A53/BS/	0.00	0.00	0.00	100	400	50	0	1177.400	0.000	0.16760	0.00000	0.00000
EX-03.1C-21E	2	20.000	0	0.250	0.250	0.000	0.000	0.000	1.00	90	0.00	A234/WPBWPB/	0.00	0.00	0.00	100	400	50	0	1177.400	0.000	0.16760	0.00000	0.00000
EX-03.1C-22E	4	20.000	0	0.250	0.250	0.000	0.000	0.000	1.00	90	0.00	A234/WPBWPB/	0.00	0.00	0.00	100	400	50	0	1177.400	0.000	0.16760	0.00000	0.00000
EX-03.1C-23P	54	20.000	0	0.250	0.250	0.000	0.000	0.000	0.00	90	0.00	A53/BS/	0.00	0.00	0.00	100	400	50	0	1177.400	0.000	0.16760	0.00000	0.00000
EX-03.1C-24T	15	20.000	0	0.250	0.250	0.000	6.625	0.280	0.00	90	0.00	A53/BS/	0.00	0.00	0.00	100	400	50	0	1177.400	0.000	0.16760	0.16760	0.00000
EX-03.1C-25P	65	20.000	0	0.250	0.250	0.000	0.000	0.000	0.00	90	0.00	A53/BS/	0.00	0.00	0.00	100	400	50	0	1177.400	0.000	0.16760	0.00000	0.00000
EX-03.1C-26E	2	20.000	0	0.250	0.250	0.000	0.000	0.000	1.00	90	0.00	A234/WPBWPB/	0.00	0.00	0.00	100	400	50	0	1177.400	0.000	0.16760	0.00000	0.00000
EX-03.1C-27E	4	20.000	0	0.250	0.250	0.000	0.000	0.000	1.00	90	0.00	A234/WPBWPB/	0.00	0.00	0.00	100	400	50	0	1177.400	0.000	0.16760	0.00000	0.00000
EX-03.1C-28P	54	20.000	0	0.250	0.250	0.000	0.000	0.000	0.00	90	0.00	A53/BS/	0.00	0.00	0.00	100	400	50	0	1177.400	0.000	0.16760	0.00000	0.00000
EX-03.1C-29E	2	20.000	0	0.250	0.250	0.000	0.000	0.000	1.00	90	0.00	A234/WPBWPB/	0.00	0.00	0.00	100	400	50	0	1177.400	0.000	0.16760	0.00000	0.00000
EX-03.1C-30P	52	20.000	0	0.250	0.250	0.000	0.000	0.000	0.00	180	0.00	A53/BS/	0.00	0.00	0.00	100	400	50	0	1177.400	0.000	0.16760	0.00000	0.00000
EX-03.1C-31E	4	20.000	0	0.250	0.250	0.000	0.000	0.000	1.00	90	0.00	A234/WPBWPB/	0.00	0.00	0.00	100	400	50	0	1177.400	0.000	0.16760	0.00000	0.00000
EX-03.1C-32P	54	20.000	0	0.250	0.250	0.000	0.000	0.000	0.00	90	0.00	A53/BS/	0.00	0.00	0.00	100	400	50	0	1177.400	0.000	0.16760	0.00000	0.00000
EX-03.1C-33T	15	20.000	0	0.250	0.250	0.000	6.625	0.280	0.00	90	0.00	A53/BS/	0.00	0.00	0.00	100	400	50	0	1177.400	0.000	0.16760	0.16760	0.00000
EX-03.1C-34P	65	20.000	0	0.250	0.250	0.000	0.000	0.000	0.00	90	0.00	A53/BS/	0.00	0.00	0.00	100	400	50	0	1177.400	0.000	0.16760	0.00000	0.00000
EX-03.1C-35E	4	20.000	0	0.250	0.250	0.000	0.000	0.000	1.00	90	0.00	A234/WPBWPB/	0.00	0.00	0.00	100	400	50	0	1177.400	0.000	0.16760	0.00000	0.00000
EX-03.1C-36P	54	20.000	0	0.250	0.263	0.000	0.000	0.000	0.00	0	0.00	A53/BS/	0.00	0.00	0.00	100	400	50	0	1177.400	0.000	0.16760	0.00000	0.00000
EX-03.1C-37E	2	20.000	0	0.250	0.439	0.000	0.000	0.000	1.00	90	0.00	A234/WPBWPB/	0.00	0.00	0.00	100	400	50	0	1177.400	0.000	0.16760	0.00000	0.00000
EX-03.1C-38P	52	20.000	0	0.250	0.259	0.000	0.000	0.000	0.00	90	0.00	A53/BS/	0.00	0.00	0.00	100	400	50	0	1177.400	0.000	0.16760	0.00000	0.00000
EX-03.1C-39E	2	20.000	0	0.250	0.250	0.000	0.000	0.000	1.00	90	0.00	A234/WPBWPB/	0.00	0.00	0.00	100	400	50	0	1177.400	0.000	0.16760	0.00000	0.00000
EX-03.1C-40N	30	20.000	0	0.250	0.250	0.000	0.000	0.000	0.00	90	0.00	A234/WPBWPB/	0.00	0.00	0.00	100	400	50	0	1177.400	0.000	0.16760	0.00000	0.00000
Line Name : EX-04.1 LPEX14 to FWH33A HDR																								
EX-04.1-01N	31	20.000	0	0.250	0.400	0.000	0.000	0.000	0.00	90	0.00	A516/6060/	0.00	0.00	0.00	50	300	13	0	1120.600	0.000	0.07930	0.00000	0.00000
EX-04.1-08X	6	20.000	0	0.250	0.000	0.000	0.000	0.000	0.00	180	0.00	A234/WPBWPB/	0.00	0.00	0.00	50	300	13	0	1120.600	0.000	0.07930	0.00000	0.00000
EX-04.1-02E	3	20.000	0	0.250	0.250	0.000	0.000	0.000	1.50	90	0.00	A234/WPBWPB/	0.00	0.00	0.00	50	300	13	0	1120.600	0.000	0.07930	0.00000	0.00000
EX-04.1-03E	3	20.000	0	0.250	0.250	0.000	0.000	0.000	1.50	90	0.00	A234/WPBWPB/	0.00	0.00	0.00	50	300	13	0	1120.600	0.000	0.07930	0.00000	0.00000
EX-04.1-04P	53	20.000	0	0.250	0.250	0.000	0.000	0.000	0.00	90	0.00	A53/BS/	0.00	0.00	0.00	50	300	13	0	1120.600	0.000	0.07930	0.00000	0.00000
EX-04.1-05E	2	20.000	0	0.250	0.250	0.000	0.000	0.000	1.00	90	0.00	A234/WPBWPB/	0.00	0.00	0.00	50	300	13	0	1120.600	0.000	0.07930	0.00000	0.00000
EX-04.1-07P	52	20.000	0	0.250	0.250	0.000	0.000	0.000	0.00	180	0.00	A53/BS/	0.00	0.00	0.00	50	300	13	0	1120.600	0.000	0.07930	0.00000	0.00000
EX-04.3-01P	60	28.000	0	0.313	0.313	0.000	0.000	0.000	0.00	90	0.00	A155/C552/	0.00	0.00	0.00	50	300	13	0	1120.600	0.000	0.07930	0.00000	0.00000
Line Name : EX-04.4 LPEX FWH 33A IN HDR																								
EX-04.2-09T	12	28.000	0	0.313	0.313	0.000	20.000	0.250	0.00	90	0.00	A155/C552/	0.00	0.00	0.00	50	300	13	0	1120.600	0.000	0.07930	0.15860	0.07930
Line Name : EX-04.11 LPEX FWH 33B IN HDR																								
EX-04.11-01P	62	28.000	0	0.313	0.313	0.000	0.000	0.000	0.00	90	0.00	A155/C552/	0.00	0.00	0.00	50	300	13	0	1120.600	0.000	0.15860	0.00000	0.00000
EX-04.11-02T	15	28.000	0	0.313	0.313	0.000	6.625	0.280	0.00	90	0.00	A155/C552/	0.00	0.00	0.00	50	300	13	0	1120.600	0.000	0.15860	0.15860	0.00000
EX-04.11-03P	65	28.000	0	0.313	0.313	0.000	0.000	0.000	0.00	90	0.00	A155/C552/	0.00	0.00	0.00	50	300	13	0	1120.600	0.000	0.15860	0.00000	0.00000
EX-04.11-04V	22	28.000	0	0.313	0.313	0.000	0.000	0.000	0.00	90	0.00	A216/WCBWCB/	0.00	0.00	0.00	50	300	13	0	1120.600	0.000	0.15860	0.00000	0.00000
EX-04.11-05P	58	28.000	0	0.313	0.313	0.000	0.000	0.000	0.00	90	0.00	A155/C552/	0.00	0.00	0.00	50	300	13	0	1120.600	0.000	0.15860	0.00000	0.00000
EX-04.11-06V	25	28.000	0	0.313	0.313	0.000	0.000	0.000	0.00	90	0.00	A216/WCBWCB/	0.00	0.00	0.00	50	300	13	0	1120.600	0.000	0.15860	0.00000	0.00000
EX-04.11-07P	58	28.000	0	0.313	0.313	0.000	0.000	0.000	0.00	90	0.00	A155/C552/	0.00	0.00	0.00	50	300	13	0	1120.600	0.000	0.15860	0.00000	0.00000
EX-04.11-08E	2	28.000	0	0.313	0.313	0.000	0.000	0.000	1.00	90	0.00	A234/WPBWPB/	0.00	0.00	0.00	50	300	13	0	1120.600	0.000	0.15860	0.00000	0.00000
EX-04.11-09E	3	28.000	0	0.313	0.313	0.000	0.000	0.000	1.50	90	0.00	A234/WPBWPB/	0.00	0.00	0.00	50	300	13	0	1120.600	0.000	0.15860	0.00000	0.00000
EX-04.11-10P	53	28.000	0	0.313	0.313	0.000	0.000	0.000	0.00	135	0.00	A155/C552/	0.00	0.00	0.00	50	300	13	0	1120.600	0.000	0.15860	0.00000	0.00000
EX-04.11-11E	3	28.000	0	0.313	0.313	0.000	0.000	0.000	1.50	90	0.00	A234/WPBWPB/	0.00	0.00	0.00	50	300	13	0	1120.600	0.000	0.15860	0.00000	0.00000
EX-04.11-12P	53	28.000	0	0.313	0.313	0.000	0.000	0.000	0.00	90	0.00	A155/C552/	0.00	0.00	0.00	50	300	13	0	1120.600	0.000	0.15860	0.00000	0.00000
EX-04.11-13E	2	28.000	0	0.313	0.313	0.000	0.000	0.000	1.00	90	0.00	A234/WPBWPB/	0.00	0.00	0.00	50	300	13	0	1120.600	0.000	0.15860	0.00000	0.00000
EX-04.11-14P	52	28.000	0	0.313	0.313	0.000	0.000	0.000	0.00	180	0.00	A155/C552/	0.00	0.00	0.00	50	300	13	0	1120.600	0.000	0.15860	0.00000	0.00000
EX-04.11-15E	2	28.000	0	0.313	0.313	0.000	0.000	0.000	1.00	90	0.00	A234/WPBWPB/	0.00	0.00	0.00	50	300	13	0	1120.600	0.000	0.15860	0.00000	0.00000
EX-04.11-16P	52	28.000	0	0.313	0.313	0.000	0.000	0.000	0.00	90	0.00	A155/C552/	0.00	0.00	0.00	50	300	13	0	1120.600	0.000	0.15860	0.00000	0.00000
EX-04.11-17T	15	28.000	0	0.313	0.313	0.000	6.625	0.280	0.00	90	0.00	A155/C552/	0.00	0.00	0.00	50	300	13	0	1120.600	0.000	0.15860	0.15860	0.00000
EX-04.11-18P	65	28.000	0	0.313	0.313	0.000	0.000	0.000	0.00	90	0.00	A155/C552/	0.00	0.00	0.00	50	300	13	0	1120.560	0.000	0.15860	0.00000	0.00000
EX-04.11-20P	9	28.000	0	0.313	0.313	0.000	0.000	0.000	0.00	90	0.00	A155/C552/	0.00	0.00	0.00	50	300	13	0	1120.600	0.000	0.15860	0.00000	0.00000
EX-04.11-19T	14	28.000	0	0.313	0.313	0.000	20.000	0.250	0.00	90	0.00	A155/C552/	0.00	0.00	0.00	50	300	13	0	1120.600	0.000	0.15860	0.07930	0.07930
Line Name : EX-04.13 LP EXT 32 to FWH 33B																								
EX-04.12-01P	64	28.000	0	0.313	0.313	0.000	0.000	0.000	0.00	90	0.00	A155/C552/	0.00	0.00	0.00	50	300	13	0	1120.600	0.000	0.07930	0.00000	0.00000

Component Name	Geom Code	Pipe Size OD (in)	Sch.	Tnom (in)	Tinit (in)	Tcrit (in)	Br/Small End OD (in)	Br/Small Tnom (in)	R / D Ratio	Orient Angle (Deg.)	Pipe Length (in)	Spec/Type/ Class	Material Cr. (%)	Cu. (%)	Mo. (%)	Design Press. (psig)	Design Temp. (Deg. F)	Op. Press. (psig)	Op. Temp. (Deg. F)	Op. Enth. (Btu/lbm)	Op. Qual.	Flow Rate U/S Mn. (Mlbm/hr)	D/S Mn. (Mlbm/hr)	Br.
EX-04.13-01R	7	28.000	0	0.313	0.000	0.000	20.000	0.250	0.00	90	0.00	A234/WPBWPB/	0.00	0.00	0.00	50	300	13	0	1120.600	0.000	0.07930	0.07930	0.00000
EX-04.13-02P	57	20.000	0	0.250	0.255	0.000	0.000	0.000	0.00	90	0.00	A53/BS/	0.00	0.00	0.00	50	300	13	0	1120.560	0.000	0.07930	0.00000	0.00000
EX-04.13-07T	15	20.000	0	0.250	0.250	0.000	2.375	0.154	0.00	90	0.00	A53/BS/	0.00	0.00	0.00	50	300	13	0	1120.600	0.000	0.07930	0.07930	0.00000
EX-04.13-03E	2	20.000	0	0.250	0.250	0.000	0.000	0.000	1.00	90	0.00	A234/WPBWPB/	0.00	0.00	0.00	50	300	13	0	1120.600	0.000	0.07930	0.00000	0.00000
EX-04.13-04P	52	20.000	0	0.250	0.250	0.000	0.000	0.000	0.00	0	0.00	A53/BS/	0.00	0.00	0.00	50	300	13	0	1120.600	0.000	0.07930	0.00000	0.00000
EX-04.13-05E	2	20.000	0	0.250	0.250	0.000	0.000	0.000	1.00	90	0.00	A234/WPBWPB/	0.00	0.00	0.00	50	300	13	0	1120.600	0.000	0.07930	0.00000	0.00000
EX-04.13-06N	30	20.000	0	0.250	0.250	0.000	0.000	0.000	0.00	90	0.00	A234/WPBWPB/	0.00	0.00	0.00	50	300	13	0	1120.600	0.000	0.07930	0.00000	0.00000
Line Name : EX-04.14 LP EXT 32 to FWH 33B																								
EX-04.14-01P	64	20.000	0	0.250	0.276	0.000	0.000	0.000	0.00	0	0.00	A53/BS/	0.00	0.00	0.00	50	300	13	0	1120.570	0.000	0.07930	0.00000	0.00000
EX-04.14-02E	2	20.000	0	0.250	0.250	0.000	0.000	0.000	1.00	90	0.00	A234/WPBWPB/	0.00	0.00	0.00	50	300	13	0	1120.600	0.000	0.07930	0.00000	0.00000
EX-04.14-03N	30	20.000	0	0.250	0.250	0.000	0.000	0.000	0.00	90	0.00	A234/WPBWPB/	0.00	0.00	0.00	50	300	13	0	1120.600	0.000	0.07930	0.00000	0.00000
Line Name : EX-04.15 LPEX14 to FWH33C HDR																								
EX-04.15-01N	31	20.000	0	0.250	0.400	0.000	0.000	0.000	0.00	90	0.00	A516/6060/	0.00	0.00	0.00	50	300	13	0	1120.600	0.000	0.07930	0.00000	0.00000
EX-04.15-08X	6	20.000	0	0.250	0.000	0.000	0.000	0.000	0.00	180	0.00	A234/WPBWPB/	0.00	0.00	0.00	50	300	13	0	1120.600	0.000	0.07930	0.00000	0.00000
EX-04.15-02E	3	20.000	0	0.250	0.250	0.000	0.000	0.000	1.50	90	0.00	A234/WPBWPB/	0.00	0.00	0.00	50	300	13	0	1120.600	0.000	0.07930	0.00000	0.00000
EX-04.15-03E	3	20.000	0	0.250	0.250	0.000	0.000	0.000	1.50	90	0.00	A234/WPBWPB/	0.00	0.00	0.00	50	300	13	0	1120.600	0.000	0.07930	0.00000	0.00000
EX-04.15-04P	53	20.000	0	0.250	0.250	0.000	0.000	0.000	0.00	90	0.00	A53/BS/	0.00	0.00	0.00	50	300	13	0	1120.600	0.000	0.07930	0.00000	0.00000
EX-04.15-05E	2	20.000	0	0.250	0.250	0.000	0.000	0.000	1.50	90	0.00	A234/WPBWPB/	0.00	0.00	0.00	50	300	13	0	1120.600	0.000	0.07930	0.00000	0.00000
EX-04.15-07P	52	20.000	0	0.250	0.250	0.000	0.000	0.000	0.00	90	0.00	A53/BS/	0.00	0.00	0.00	50	300	13	0	1120.600	0.000	0.07930	0.00000	0.00000
EX-04.17-01P	60	28.000	0	0.313	0.313	0.000	0.000	0.000	0.00	90	0.00	A155/C552/	0.00	0.00	0.00	50	300	13	0	1120.600	0.000	0.07930	0.00000	0.00000
Line Name : EX-04.18 LPEX FWH 33C IN HDR																								
EX-04.16-09T	12	28.000	0	0.313	0.313	0.000	20.000	0.250	0.00	90	0.00	A155/C552/	0.00	0.00	0.00	50	300	13	0	1120.600	0.000	0.07930	0.15860	0.07930
Line Name : EX-04.16 LPEX13 to FWH33C HDR																								
EX-04.16-01N	31	20.000	0	0.250	0.400	0.000	0.000	0.000	0.00	90	0.00	A516/6060/	0.00	0.00	0.00	50	300	13	0	1120.600	0.000	0.07930	0.00000	0.00000
EX-04.16-10X	6	20.000	0	0.250	0.000	0.000	0.000	0.000	0.00	180	0.00	A234/WPBWPB/	0.00	0.00	0.00	50	300	13	0	1120.600	0.000	0.07930	0.00000	0.00000
EX-04.16-02E	3	20.000	0	0.250	0.250	0.000	0.000	0.000	1.50	90	0.00	A234/WPBWPB/	0.00	0.00	0.00	50	300	13	0	1120.600	0.000	0.07930	0.00000	0.00000
EX-04.16-03E	3	20.000	0	0.250	0.250	0.000	0.000	0.000	1.50	90	0.00	A234/WPBWPB/	0.00	0.00	0.00	50	300	13	0	1120.600	0.000	0.07930	0.00000	0.00000
EX-04.16-04P	53	20.000	0	0.250	0.250	0.000	0.000	0.000	0.00	90	0.00	A53/BS/	0.00	0.00	0.00	50	300	13	0	1120.600	0.000	0.07930	0.00000	0.00000
EX-04.16-05E	3	20.000	0	0.250	0.250	0.000	0.000	0.000	1.50	90	0.00	A234/WPBWPB/	0.00	0.00	0.00	50	300	13	0	1120.600	0.000	0.07930	0.00000	0.00000
EX-04.16-06P	53	20.000	0	0.250	0.250	0.000	0.000	0.000	0.00	90	0.00	A53/BS/	0.00	0.00	0.00	50	300	13	0	1120.600	0.000	0.07930	0.00000	0.00000
EX-04.16-07E	2	20.000	0	0.250	0.250	0.000	0.000	0.000	1.50	90	0.00	A234/WPBWPB/	0.00	0.00	0.00	50	300	13	0	1120.600	0.000	0.07930	0.00000	0.00000
EX-04.16-08P	52	20.000	0	0.250	0.250	0.000	0.000	0.000	0.00	180	0.00	A53/BS/	0.00	0.00	0.00	50	300	13	0	1120.600	0.000	0.07930	0.00000	0.00000
Line Name : EX-04.18 LPEX FWH 33C IN HDR																								
EX-04.18-01P	62	28.000	0	0.313	0.313	0.000	0.000	0.000	0.00	90	0.00	A155/C552/	0.00	0.00	0.00	50	300	13	0	1120.600	0.000	0.15860	0.00000	0.00000
EX-04.18-02T	15	28.000	0	0.313	0.313	0.000	6.625	0.280	0.00	90	0.00	A155/C552/	0.00	0.00	0.00	50	300	13	0	1120.600	0.000	0.15860	0.15860	0.00000
EX-04.18-03P	65	28.000	0	0.313	0.313	0.000	0.000	0.000	0.00	90	0.00	A155/C552/	0.00	0.00	0.00	50	300	13	0	1120.600	0.000	0.15860	0.00000	0.00000
EX-04.18-04V	22	28.000	0	0.313	0.313	0.000	0.000	0.000	0.00	90	0.00	A216/WCBWCB/	0.00	0.00	0.00	50	300	13	0	1120.600	0.000	0.15860	0.00000	0.00000
EX-04.18-05P	58	28.000	0	0.313	0.313	0.000	0.000	0.000	0.00	90	0.00	A155/C552/	0.00	0.00	0.00	50	300	13	0	1120.600	0.000	0.15860	0.00000	0.00000
EX-04.18-06V	25	28.000	0	0.313	0.313	0.000	0.000	0.000	0.00	90	0.00	A216/WCBWCB/	0.00	0.00	0.00	50	300	13	0	1120.600	0.000	0.15860	0.00000	0.00000
EX-04.19-01R	7	28.000	0	0.313	0.000	0.000	24.000	0.250	0.00	90	0.00	A234/WPBWPB/	0.00	0.00	0.00	50	300	13	0	1120.600	0.000	0.15860	0.15860	0.00000
EX-04.19-02V	23	24.000	0	0.313	0.313	0.000	0.000	0.000	0.00	90	0.00	A216/WCBWCB/	0.00	0.00	0.00	50	300	13	0	1120.600	0.000	0.15860	0.00000	0.00000
EX-04.19-03R	18	28.000	0	0.313	0.000	0.000	24.000	0.250	0.00	90	0.00	A234/WPBWPB/	0.00	0.00	0.00	50	300	13	0	1120.600	0.000	0.15860	0.15860	0.00000
EX-04.20-01P	68	28.000	0	0.313	0.313	0.000	0.000	0.000	0.00	90	0.00	A155/C552/	0.00	0.00	0.00	50	300	13	0	1120.600	0.000	0.15860	0.00000	0.00000
EX-04.20-02E	2	28.000	0	0.313	0.313	0.000	0.000	0.000	1.00	90	0.00	A234/WPBWPB/	0.00	0.00	0.00	50	300	13	0	1120.600	0.000	0.15860	0.00000	0.00000
EX-04.20-03P	52	28.000	0	0.313	0.313	0.000	0.000	0.000	0.00	180	0.00	A155/C552/	0.00	0.00	0.00	50	300	13	0	1120.600	0.000	0.15860	0.00000	0.00000
EX-04.20-04E	2	28.000	0	0.313	0.313	0.000	0.000	0.000	1.00	90	0.00	A234/WPBWPB/	0.00	0.00	0.00	50	300	13	0	1120.600	0.000	0.15860	0.00000	0.00000
EX-04.20-05P	52	28.000	0	0.313	0.313	0.000	0.000	0.000	0.00	90	0.00	A155/C552/	0.00	0.00	0.00	50	300	13	0	1120.600	0.000	0.15860	0.00000	0.00000
EX-04.20-06E	4	28.000	0	0.313	0.313	0.000	0.000	0.000	1.00	90	0.00	A234/WPBWPB/	0.00	0.00	0.00	50	300	13	0	1120.600	0.000	0.15860	0.00000	0.00000
EX-04.20-07P	54	28.000	0	0.313	0.313	0.000	0.000	0.000	0.00	90	0.00	A155/C552/	0.00	0.00	0.00	50	300	13	0	1120.600	0.000	0.15860	0.00000	0.00000
EX-04.20-08E	2	28.000	0	0.313	0.313	0.000	0.000	0.000	1.00	90	0.00	A234/WPBWPB/	0.00	0.00	0.00	50	300	13	0	1120.600	0.000	0.15860	0.00000	0.00000
EX-04.20-09P	52	28.000	0	0.313	0.313	0.000	0.000	0.000	0.00	90	0.00	A155/C552/	0.00	0.00	0.00	50	300	13	0	1120.600	0.000	0.15860	0.00000	0.00000
EX-04.20-10E	2	28.000	0	0.313	0.313	0.000	0.000	0.000	1.00	90	0.00	A234/WPBWPB/	0.00	0.00	0.00	50	300	13	0	1120.600	0.000	0.15860	0.00000	0.00000

Component Name	Geom Code	Pipe Size OD (in)	Sch.	Tnom (in)	Tinit (in)	Tcrit (in)	Br/Small End OD (in)	Br/Small Tnom (in)	R / D Ratio	Orient Angle (Deg.)	Pipe Length (in)	Spec/Type/ Class	Material Cr. (%)	Cu. (%)	Mo. (%)	Design Press. (psig)	Design Temp. (Deg. F)	Op. Press. (psig)	Op. Temp. (Deg. F)	Op. Enth. (Btu/lbm)	Op. Qual.	Flow Rate U/S Mn. (Mlbm/hr)	D/S Mn. (Mlbm/hr)	Br.
EX-04.20-11P	52	28.000	0	0.313	0.313	0.000	0.000	0.000	0.00	180	0.00	A155/C552/	0.00	0.00	0.00	50	300	13	0	1120.600	0.000	0.15860	0.00000	0.00000
EX-04.20-12E	2	28.000	0	0.313	0.313	0.000	0.000	0.000	1.00	90	0.00	A234/WPBWPB/	0.00	0.00	0.00	50	300	13	0	1120.600	0.000	0.15860	0.00000	0.00000
EX-04.20-13P	52	28.000	0	0.313	0.313	0.000	0.000	0.000	0.00	90	0.00	A155/C552/	0.00	0.00	0.00	50	300	13	0	1120.600	0.000	0.15860	0.00000	0.00000
EX-04.20-14T	15	28.000	0	0.313	0.313	0.000	6.625	0.280	0.00	90	0.00	A155/C552/	0.00	0.00	0.00	50	300	13	0	1120.600	0.000	0.15860	0.15860	0.00000
EX-04.20-15P	65	28.000	0	0.313	0.313	0.000	0.000	0.000	0.00	90	0.00	A155/C552/	0.00	0.00	0.00	50	300	13	0	1120.600	0.000	0.15860	0.00000	0.00000
EX-04.20-16T	14	28.000	0	0.313	0.384	0.000	20.000	0.250	0.00	90	0.00	A155/C552/	0.00	0.00	0.00	50	300	13	0	1120.560	0.000	0.15860	0.07930	0.07930
Line Name : EX-04.2 LPEX13 to FWH33A HDR																								
EX-04.2-01N	31	20.000	0	0.250	0.400	0.000	0.000	0.000	0.00	90	0.00	A516/6060/	0.00	0.00	0.00	50	300	13	0	1120.600	0.000	0.07930	0.00000	0.00000
EX-04.2-10X	6	20.000	0	0.250	0.000	0.000	0.000	0.000	0.00	180	0.00	A234/WPBWPB/	0.00	0.00	0.00	50	300	13	0	1120.600	0.000	0.07930	0.00000	0.00000
EX-04.2-02E	3	20.000	0	0.250	0.250	0.000	0.000	0.000	1.50	90	0.00	A234/WPBWPB/	0.00	0.00	0.00	50	300	13	0	1120.600	0.000	0.07930	0.00000	0.00000
EX-04.2-03E	3	20.000	0	0.250	0.250	0.000	0.000	0.000	1.50	90	0.00	A234/WPBWPB/	0.00	0.00	0.00	50	300	13	0	1120.600	0.000	0.07930	0.00000	0.00000
EX-04.2-04P	53	20.000	0	0.250	0.250	0.000	0.000	0.000	0.00	90	0.00	A53/BS/	0.00	0.00	0.00	50	300	13	0	1120.600	0.000	0.07930	0.00000	0.00000
EX-04.2-05E	3	20.000	0	0.250	0.250	0.000	0.000	0.000	1.50	90	0.00	A234/WPBWPB/	0.00	0.00	0.00	50	300	13	0	1120.600	0.000	0.07930	0.00000	0.00000
EX-04.2-06P	53	20.000	0	0.250	0.250	0.000	0.000	0.000	0.00	90	0.00	A53/BS/	0.00	0.00	0.00	50	300	13	0	1120.600	0.000	0.07930	0.00000	0.00000
EX-04.2-07E	2	20.000	0	0.250	0.250	0.000	0.000	0.000	1.50	90	0.00	A234/WPBWPB/	0.00	0.00	0.00	50	300	13	0	1120.600	0.000	0.07930	0.00000	0.00000
EX-04.2-08P	52	20.000	0	0.250	0.250	0.000	0.000	0.000	0.00	180	0.00	A53/BS/	0.00	0.00	0.00	50	300	13	0	1120.600	0.000	0.07930	0.00000	0.00000
Line Name : EX-04.21 LP EXT 31 to FWH 33C																								
EX-04.20-17P	64	28.000	0	0.313	0.313	0.000	0.000	0.000	0.00	90	0.00	A155/C552/	0.00	0.00	0.00	50	300	13	0	1120.600	0.000	0.07930	0.00000	0.00000
EX-04.21-01R	7	28.000	0	0.313	0.000	0.000	20.000	0.250	0.00	90	0.00	A234/WPBWPB/	0.00	0.00	0.00	50	300	13	0	1120.600	0.000	0.07930	0.07930	0.00000
EX-04.21-02P	57	20.000	0	0.250	0.267	0.000	0.000	0.000	0.00	90	0.00	A53/BS/	0.00	0.00	0.00	50	300	13	0	1120.570	0.000	0.07930	0.00000	0.00000
EX-04.21-07T	15	20.000	0	0.250	0.250	0.000	2.375	0.154	0.00	90	0.00	A53/BS/	0.00	0.00	0.00	50	300	13	0	1120.600	0.000	0.07930	0.07930	0.00000
EX-04.21-03E	2	20.000	0	0.250	0.250	0.000	0.000	0.000	1.00	90	0.00	A234/WPBWPB/	0.00	0.00	0.00	50	300	13	0	1120.600	0.000	0.07930	0.00000	0.00000
EX-04.21-04P	52	20.000	0	0.250	0.250	0.000	0.000	0.000	0.00	0	0.00	A53/BS/	0.00	0.00	0.00	50	300	13	0	1120.600	0.000	0.07930	0.00000	0.00000
EX-04.21-05E	2	20.000	0	0.250	0.250	0.000	0.000	0.000	1.00	90	0.00	A234/WPBWPB/	0.00	0.00	0.00	50	300	13	0	1120.600	0.000	0.07930	0.00000	0.00000
EX-04.21-06N	30	20.000	0	0.250	0.250	0.000	0.000	0.000	0.00	90	0.00	A234/WPBWPB/	0.00	0.00	0.00	50	300	13	0	1120.600	0.000	0.07930	0.00000	0.00000
Line Name : EX-04.22 LP EXT 31 to FWH 33C																								
EX-04.22-01P	64	20.000	0	0.250	0.271	0.000	0.000	0.000	0.00	0	0.00	A53/BS/	0.00	0.00	0.00	50	300	13	0	1120.570	0.000	0.07930	0.00000	0.00000
EX-04.22-02E	2	20.000	0	0.250	0.250	0.000	0.000	0.000	1.00	90	0.00	A234/WPBWPB/	0.00	0.00	0.00	50	300	13	0	1120.600	0.000	0.07930	0.00000	0.00000
EX-04.22-03N	30	20.000	0	0.250	0.250	0.000	0.000	0.000	0.00	90	0.00	A234/WPBWPB/	0.00	0.00	0.00	50	300	13	0	1120.600	0.000	0.07930	0.00000	0.00000
Line Name : EX-04.4 LPEX FWH 33A IN HDR																								
EX-04.4-01P	62	28.000	0	0.313	0.313	0.000	0.000	0.000	0.00	90	0.00	A155/C552/	0.00	0.00	0.00	50	300	13	0	1120.600	0.000	0.15860	0.00000	0.00000
EX-04.4-02T	15	28.000	0	0.313	0.313	0.000	6.625	0.280	0.00	90	0.00	A155/C552/	0.00	0.00	0.00	50	300	13	0	1120.600	0.000	0.15860	0.15860	0.00000
EX-04.4-03P	65	28.000	0	0.313	0.313	0.000	0.000	0.000	0.00	90	0.00	A155/C552/	0.00	0.00	0.00	50	300	13	0	1120.600	0.000	0.15860	0.00000	0.00000
EX-04.4-04V	22	28.000	0	0.313	0.313	0.000	0.000	0.000	0.00	90	0.00	A216/WCBWCB/	0.00	0.00	0.00	50	300	13	0	1120.600	0.000	0.15860	0.00000	0.00000
EX-04.4-05P	58	28.000	0	0.313	0.313	0.000	0.000	0.000	0.00	90	0.00	A155/C552/	0.00	0.00	0.00	50	300	13	0	1120.600	0.000	0.15860	0.00000	0.00000
EX-04.4-06V	25	28.000	0	0.313	0.313	0.000	0.000	0.000	0.00	90	0.00	A216/WCBWCB/	0.00	0.00	0.00	50	300	13	0	1120.600	0.000	0.15860	0.00000	0.00000
EX-04.4-07P	58	28.000	0	0.313	0.313	0.000	0.000	0.000	0.00	90	0.00	A155/C552/	0.00	0.00	0.00	50	300	13	0	1120.600	0.000	0.15860	0.00000	0.00000
EX-04.4-08E	2	28.000	0	0.313	0.313	0.000	0.000	0.000	1.00	90	0.00	A234/WPBWPB/	0.00	0.00	0.00	50	300	13	0	1120.600	0.000	0.15860	0.00000	0.00000
EX-04.4-09P	52	28.000	0	0.313	0.313	0.000	0.000	0.000	0.00	180	0.00	A155/C552/	0.00	0.00	0.00	50	300	13	0	1120.600	0.000	0.15860	0.00000	0.00000
EX-04.4-10E	2	28.000	0	0.313	0.313	0.000	0.000	0.000	1.00	90	0.00	A234/WPBWPB/	0.00	0.00	0.00	50	300	13	0	1120.600	0.000	0.15860	0.00000	0.00000
EX-04.4-11P	52	28.000	0	0.313	0.313	0.000	0.000	0.000	0.00	90	0.00	A155/C552/	0.00	0.00	0.00	50	300	13	0	1120.600	0.000	0.15860	0.00000	0.00000
EX-04.4-12E	4	28.000	0	0.313	0.313	0.000	0.000	0.000	1.00	90	0.00	A234/WPBWPB/	0.00	0.00	0.00	50	300	13	0	1120.600	0.000	0.15860	0.00000	0.00000
EX-04.4-13P	54	28.000	0	0.313	0.313	0.000	0.000	0.000	0.00	90	0.00	A155/C552/	0.00	0.00	0.00	50	300	13	0	1120.600	0.000	0.15860	0.00000	0.00000
EX-04.4-14E	2	28.000	0	0.313	0.313	0.000	0.000	0.000	1.00	90	0.00	A234/WPBWPB/	0.00	0.00	0.00	50	300	13	0	1120.600	0.000	0.15860	0.00000	0.00000
EX-04.4-15P	52	28.000	0	0.313	0.313	0.000	0.000	0.000	0.00	90	0.00	A155/C552/	0.00	0.00	0.00	50	300	13	0	1120.600	0.000	0.15860	0.00000	0.00000
EX-04.4-16E	2	28.000	0	0.313	0.313	0.000	0.000	0.000	1.00	90	0.00	A234/WPBWPB/	0.00	0.00	0.00	50	300	13	0	1120.600	0.000	0.15860	0.00000	0.00000
EX-04.4-17P	52	28.000	0	0.313	0.313	0.000	0.000	0.000	0.00	180	0.00	A155/C552/	0.00	0.00	0.00	50	300	13	0	1120.600	0.000	0.15860	0.00000	0.00000
EX-04.4-18E	2	28.000	0	0.313	0.313	0.000	0.000	0.000	1.00	90	0.00	A234/WPBWPB/	0.00	0.00	0.00	50	300	13	0	1120.600	0.000	0.15860	0.00000	0.00000
EX-04.4-19P	52	28.000	0	0.313	0.313	0.000	0.000	0.000	0.00	90	0.00	A155/C552/	0.00	0.00	0.00	50	300	13	0	1120.600	0.000	0.15860	0.00000	0.00000
EX-04.4-20T	15	28.000	0	0.313	0.313	0.000	6.625	0.280	0.00	90	0.00	A155/C552/	0.00	0.00	0.00	50	300	13	0	1120.600	0.000	0.15860	0.15860	0.00000
EX-04.4-21P	65	28.000	0	0.313	0.313	0.000	0.000	0.000	0.00	90	0.00	A155/C552/	0.00	0.00	0.00	50	300	13	0	1120.560	0.000	0.15860	0.00000	0.00000
EX-04.4-23P	9	28.000	0	0.313	0.313	0.000	0.000	0.000	0.00	90	0.00	A155/C552/	0.00	0.00	0.00	50	300	13	0	1120.600	0.000	0.15860	0.00000	0.00000
EX-04.4-22T	14	28.000	0	0.313	0.352	0.000	20.000	0.250	0.00	90	0.00	A155/C552/	0.00	0.00	0.00	50	300	13	0	1120.570	0.000	0.15860	0.07930	0.07930

Component Name	Geom Code	Pipe Size OD (in)	Sch.	Tnom (in)	Tinit (in)	Tcrit (in)	Br/Small End OD (in)	Br/Small Tnom (in)	R / D Ratio	Orient Angle (Deg.)	Pipe Length (in)	Spec/Type/ Class	Material Cr. (%)	Cu. (%)	Mo. (%)	Design Press. (psig)	Design Temp. (Deg. F)	Op. Press. (psig)	Op. Temp. (Deg. F)	Op. Enth. (Btu/lbm)	Op. Qual.	Flow Rate U/S Mn. (Mlbm/hr)	D/S Mn. (Mlbm/hr)	Br.
Line Name : EX-04.6 LP EXT to FWH 33A																								
EX-04.5-01P	64	28.000	0	0.313	0.313	0.000	0.000	0.000	0.00	90	0.00	A155/C552/	0.00	0.00	0.00	50	300	13	0	1120.560	0.000	0.07930	0.00000	0.00000
EX-04.6-01R	7	28.000	0	0.313	0.000	0.000	20.000	0.250	0.00	90	0.00	A234/WPBWPB/	0.00	0.00	0.00	50	300	13	0	1120.600	0.000	0.07930	0.07930	0.00000
EX-04.6-02P	57	20.000	0	0.250	0.264	0.000	0.000	0.000	0.00	90	0.00	A53/BS/	0.00	0.00	0.00	50	300	13	0	1120.570	0.000	0.07930	0.00000	0.00000
EX-04.6-07T	15	20.000	0	0.250	0.262	0.000	2.375	0.154	0.00	90	0.00	A53/BS/	0.00	0.00	0.00	50	300	13	0	1120.570	0.000	0.07930	0.07930	0.00000
EX-04.6-03E	2	20.000	0	0.250	0.461	0.000	0.000	0.000	1.00	90	0.00	A234/WPBWPB/	0.00	0.00	0.00	50	300	13	0	1120.570	0.000	0.07930	0.00000	0.00000
EX-04.6-04P	52	20.000	0	0.250	0.279	0.000	0.000	0.000	0.00	0	0.00	A53/BS/	0.00	0.00	0.00	50	300	13	0	1120.570	0.000	0.07930	0.00000	0.00000
EX-04.6-05E	2	20.000	0	0.250	0.250	0.000	0.000	0.000	1.00	90	0.00	A234/WPBWPB/	0.00	0.00	0.00	50	300	13	0	1120.600	0.000	0.07930	0.00000	0.00000
EX-04.6-06N	30	20.000	0	0.250	0.250	0.000	0.000	0.000	0.00	90	0.00	A234/WPBWPB/	0.00	0.00	0.00	50	300	13	0	1120.600	0.000	0.07930	0.00000	0.00000
Line Name : EX-04.7 LP EXT to FWH 33A																								
EX-04.7-01P	64	20.000	0	0.250	0.264	0.000	0.000	0.000	0.00	0	0.00	A53/BS/	0.00	0.00	0.00	50	300	13	0	1120.570	0.000	0.07930	0.00000	0.00000
EX-04.7-02E	2	20.000	0	0.250	0.250	0.000	0.000	0.000	1.00	90	0.00	A234/WPBWPB/	0.00	0.00	0.00	50	300	13	0	1120.600	0.000	0.07930	0.00000	0.00000
EX-04.7-03N	30	20.000	0	0.250	0.250	0.000	0.000	0.000	0.00	90	0.00	A234/WPBWPB/	0.00	0.00	0.00	50	300	13	0	1120.600	0.000	0.07930	0.00000	0.00000
Line Name : EX-04.8 LPEX14 to FWH33B HDR																								
EX-04.8-01N	31	20.000	0	0.250	0.400	0.000	0.000	0.000	0.00	90	0.00	A516/6060/	0.00	0.00	0.00	50	300	13	0	1120.600	0.000	0.07930	0.00000	0.00000
EX-04.8-08X	6	20.000	0	0.250	0.000	0.000	0.000	0.000	0.00	180	0.00	A234/WPBWPB/	0.00	0.00	0.00	50	300	13	0	1120.600	0.000	0.07930	0.00000	0.00000
EX-04.8-02E	3	20.000	0	0.250	0.250	0.000	0.000	0.000	1.50	90	0.00	A234/WPBWPB/	0.00	0.00	0.00	50	300	13	0	1120.600	0.000	0.07930	0.00000	0.00000
EX-04.8-03E	3	20.000	0	0.250	0.250	0.000	0.000	0.000	1.50	90	0.00	A234/WPBWPB/	0.00	0.00	0.00	50	300	13	0	1120.600	0.000	0.07930	0.00000	0.00000
EX-04.8-04P	53	20.000	0	0.250	0.250	0.000	0.000	0.000	0.00	90	0.00	A53/BS/	0.00	0.00	0.00	50	300	13	0	1120.600	0.000	0.07930	0.00000	0.00000
EX-04.8-05E	2	20.000	0	0.250	0.250	0.000	0.000	0.000	1.00	90	0.00	A234/WPBWPB/	0.00	0.00	0.00	50	300	13	0	1120.600	0.000	0.07930	0.00000	0.00000
EX-04.8-07P	52	20.000	0	0.250	0.250	0.000	0.000	0.000	0.00	180	0.00	A53/BS/	0.00	0.00	0.00	50	300	13	0	1120.600	0.000	0.07930	0.00000	0.00000
EX-04.10-01P	60	28.000	0	0.313	0.313	0.000	0.000	0.000	0.00	90	0.00	A155/C552/	0.00	0.00	0.00	50	300	13	0	1120.600	0.000	0.07930	0.00000	0.00000
Line Name : EX-04.11 LPEX FWH 33B IN HDR																								
EX-04.9-09T	12	28.000	0	0.313	0.313	0.000	20.000	0.250	0.00	90	0.00	A155/C552/	0.00	0.00	0.00	50	300	13	0	1120.600	0.000	0.07930	0.15860	0.07930
Line Name : EX-04.9 LPEX13 to FWH33B HDR																								
EX-04.9-01N	31	20.000	0	0.250	0.400	0.000	0.000	0.000	0.00	90	0.00	A516/6060/	0.00	0.00	0.00	50	300	13	0	1120.600	0.000	0.07930	0.00000	0.00000
EX-04.9-10X	6	20.000	0	0.250	0.000	0.000	0.000	0.000	0.00	180	0.00	A234/WPBWPB/	0.00	0.00	0.00	50	300	13	0	1120.600	0.000	0.07930	0.00000	0.00000
EX-04.9-02E	3	20.000	0	0.250	0.250	0.000	0.000	0.000	1.50	90	0.00	A234/WPBWPB/	0.00	0.00	0.00	50	300	13	0	1120.600	0.000	0.07930	0.00000	0.00000
EX-04.9-03E	3	20.000	0	0.250	0.250	0.000	0.000	0.000	1.50	90	0.00	A234/WPBWPB/	0.00	0.00	0.00	50	300	13	0	1120.600	0.000	0.07930	0.00000	0.00000
EX-04.9-04P	53	20.000	0	0.250	0.250	0.000	0.000	0.000	0.00	90	0.00	A53/BS/	0.00	0.00	0.00	50	300	13	0	1120.600	0.000	0.07930	0.00000	0.00000
EX-04.9-05E	3	20.000	0	0.250	0.250	0.000	0.000	0.000	1.50	90	0.00	A234/WPBWPB/	0.00	0.00	0.00	50	300	13	0	1120.600	0.000	0.07930	0.00000	0.00000
EX-04.9-06P	53	20.000	0	0.250	0.250	0.000	0.000	0.000	0.00	90	0.00	A53/BS/	0.00	0.00	0.00	50	300	13	0	1120.600	0.000	0.07930	0.00000	0.00000
EX-04.9-07E	2	20.000	0	0.250	0.250	0.000	0.000	0.000	1.50	90	0.00	A234/WPBWPB/	0.00	0.00	0.00	50	300	13	0	1120.600	0.000	0.07930	0.00000	0.00000
EX-04.9-08P	52	20.000	0	0.250	0.250	0.000	0.000	0.000	0.00	180	0.00	A53/BS/	0.00	0.00	0.00	50	300	13	0	1120.600	0.000	0.07930	0.00000	0.00000
Line Name : EX-05.1A LP EXT 16 to FWH 32A																								
EX-05.1A-01N	31	22.000	0	0.250	0.400	0.000	0.000	0.000	0.00	90	0.00	A516/6060/	0.00	0.00	0.00	50	300	-4	0	815.400	0.000	0.06800	0.00000	0.00000
EX-05.1A-02P	61	22.000	0	0.250	0.250	0.000	0.000	0.000	0.00	180	0.00	A53/BS/	0.00	0.00	0.00	50	300	-4	0	815.400	0.000	0.06800	0.00000	0.00000
EX-05.1A-03E	3	22.000	0	0.250	0.250	0.000	0.000	0.000	1.50	90	0.00	A234/WPBWPB/	0.00	0.00	0.00	50	300	-4	0	815.400	0.000	0.06800	0.00000	0.00000
EX-05.1A-04N	30	22.000	0	0.250	0.375	0.000	0.000	0.000	0.00	90	0.00	A234/WPBWPB/	0.00	0.00	0.00	50	300	-4	0	815.400	0.000	0.06800	0.00000	0.00000
Line Name : EX-05.1B LP EXT 16 to FWH 32B																								
EX-05.1B-01N	31	22.000	0	0.250	0.400	0.000	0.000	0.000	0.00	90	0.00	A516/6060/	0.00	0.00	0.00	50	300	-4	0	815.400	0.000	0.06800	0.00000	0.00000
EX-05.1B-02P	61	22.000	0	0.250	0.250	0.000	0.000	0.000	0.00	180	0.00	A53/BS/	0.00	0.00	0.00	50	300	-4	0	815.400	0.000	0.06800	0.00000	0.00000
EX-05.1B-03E	3	22.000	0	0.250	0.250	0.000	0.000	0.000	1.50	90	0.00	A234/WPBWPB/	0.00	0.00	0.00	50	300	-4	0	815.400	0.000	0.06800	0.00000	0.00000
EX-05.1B-04N	30	22.000	0	0.250	0.375	0.000	0.000	0.000	0.00	90	0.00	A234/WPBWPB/	0.00	0.00	0.00	50	300	-4	0	815.400	0.000	0.06800	0.00000	0.00000
Line Name : EX-05.1C LP EXT 16 to FWH 32C																								

Component Name	Geom Code	Pipe Size OD (in)	Sch.	Tnom (in)	Tinit (in)	Tcrit (in)	Br/Small End OD (in)	Br/Small Tnom (in)	R / D Ratio	Orient Angle (Deg.)	Pipe Length (in)	Spec/Type/ Class	Material Cr. (%)	Cu. (%)	Mo. (%)	Design Press. (psig)	Design Temp. (Deg. F)	Op. Press. (psig)	Op. Temp. (Deg. F)	Op. Enth. (Btu/lbm)	Op. Qual.	Flow Rate U/S Mn. (Mlbm/hr)	D/S Mn. (Mlbm/hr)	Br.
EX-05.1C-01N	31	22.000	0	0.250	0.400	0.000	0.000	0.000	0.00	90	0.00	A516/6060/	0.00	0.00	0.00	50	300	-4	0	815.400	0.000	0.06800	0.00000	0.00000
EX-05.1C-02P	61	22.000	0	0.250	0.250	0.000	0.000	0.000	0.00	180	0.00	A53/BS/	0.00	0.00	0.00	50	300	-4	0	815.400	0.000	0.06800	0.00000	0.00000
EX-05.1C-03E	3	22.000	0	0.250	0.250	0.000	0.000	0.000	1.50	90	0.00	A234/WPBWPB/	0.00	0.00	0.00	50	300	-4	0	815.400	0.000	0.06800	0.00000	0.00000
EX-05.1C-04N	30	22.000	0	0.250	0.375	0.000	0.000	0.000	0.00	90	0.00	A234/WPBWPB/	0.00	0.00	0.00	50	300	-4	0	815.400	0.000	0.06800	0.00000	0.00000
Line Name : EX-05.2A LP EXT 15 to FWH 32A																								
EX-05.2A-01N	31	22.000	0	0.250	0.400	0.000	0.000	0.000	0.00	90	0.00	A516/6060/	0.00	0.00	0.00	50	300	-4	0	815.400	0.000	0.06800	0.00000	0.00000
EX-05.2A-02E	4	22.000	0	0.250	0.250	0.000	0.000	0.000	1.50	90	0.00	A234/WPBWPB/	0.00	0.00	0.00	50	300	-4	0	815.400	0.000	0.06800	0.00000	0.00000
EX-05.2A-03E	3	22.000	0	0.250	0.250	0.000	0.000	0.000	1.50	90	0.00	A234/WPBWPB/	0.00	0.00	0.00	50	300	-4	0	815.400	0.000	0.06800	0.00000	0.00000
EX-05.2A-04P	53	22.000	0	0.250	0.250	0.000	0.000	0.000	0.00	90	0.00	A53/BS/	0.00	0.00	0.00	50	300	-4	0	815.400	0.000	0.06800	0.00000	0.00000
EX-05.2A-05E	1	22.000	0	0.250	0.250	0.000	0.000	0.000	1.50	90	0.00	A234/WPBWPB/	0.00	0.00	0.00	50	300	-4	0	815.400	0.000	0.06800	0.00000	0.00000
EX-05.2A-06N	30	22.000	0	0.250	0.375	0.000	0.000	0.000	0.00	90	0.00	A234/WPBWPB/	0.00	0.00	0.00	50	300	-4	0	815.400	0.000	0.06800	0.00000	0.00000
Line Name : EX-05.2B LP EXT 15 to FWH 32B																								
EX-05.2B-01N	31	22.000	0	0.250	0.400	0.000	0.000	0.000	0.00	90	0.00	A516/6060/	0.00	0.00	0.00	50	300	-4	0	815.400	0.000	0.06800	0.00000	0.00000
EX-05.2B-02E	4	22.000	0	0.250	0.250	0.000	0.000	0.000	1.50	90	0.00	A234/WPBWPB/	0.00	0.00	0.00	50	300	-4	0	815.400	0.000	0.06800	0.00000	0.00000
EX-05.2B-03E	3	22.000	0	0.250	0.250	0.000	0.000	0.000	1.50	90	0.00	A234/WPBWPB/	0.00	0.00	0.00	50	300	-4	0	815.400	0.000	0.06800	0.00000	0.00000
EX-05.2B-04P	53	22.000	0	0.250	0.250	0.000	0.000	0.000	0.00	90	0.00	A53/BS/	0.00	0.00	0.00	50	300	-4	0	815.400	0.000	0.06800	0.00000	0.00000
EX-05.2B-05E	1	22.000	0	0.250	0.250	0.000	0.000	0.000	1.50	90	0.00	A234/WPBWPB/	0.00	0.00	0.00	50	300	-4	0	815.400	0.000	0.06800	0.00000	0.00000
EX-05.2B-06N	30	22.000	0	0.250	0.375	0.000	0.000	0.000	0.00	90	0.00	A234/WPBWPB/	0.00	0.00	0.00	50	300	-4	0	815.400	0.000	0.06800	0.00000	0.00000
Line Name : EX-05.2C LP EXT 15 to FWH 32C																								
EX-05.2C-01N	31	22.000	0	0.250	0.400	0.000	0.000	0.000	0.00	90	0.00	A516/6060/	0.00	0.00	0.00	50	300	-4	0	815.400	0.000	0.06800	0.00000	0.00000
EX-05.2C-02E	4	22.000	0	0.250	0.250	0.000	0.000	0.000	1.50	90	0.00	A234/WPBWPB/	0.00	0.00	0.00	50	300	-4	0	815.400	0.000	0.06800	0.00000	0.00000
EX-05.2C-03E	3	22.000	0	0.250	0.250	0.000	0.000	0.000	1.50	90	0.00	A234/WPBWPB/	0.00	0.00	0.00	50	300	-4	0	815.400	0.000	0.06800	0.00000	0.00000
EX-05.2C-04P	53	22.000	0	0.250	0.250	0.000	0.000	0.000	0.00	90	0.00	A53/BS/	0.00	0.00	0.00	50	300	-4	0	815.400	0.000	0.06800	0.00000	0.00000
EX-05.2C-05E	1	22.000	0	0.250	0.250	0.000	0.000	0.000	1.50	90	0.00	A234/WPBWPB/	0.00	0.00	0.00	50	300	-4	0	815.400	0.000	0.06800	0.00000	0.00000
EX-05.2C-06N	30	22.000	0	0.250	0.375	0.000	0.000	0.000	0.00	90	0.00	A234/WPBWPB/	0.00	0.00	0.00	50	300	-4	0	815.400	0.000	0.06800	0.00000	0.00000
Line Name : EX-06.1A LP EXT 19 to FWH 31A																								
EX-06.1A-01N	31	26.000	0	0.313	0.400	0.000	0.000	0.000	0.00	90	0.00	A516/6060/	0.00	0.00	0.00	50	300	-10	0	858.037	0.000	0.05560	0.00000	0.00000
EX-06.1A-02E	4	26.000	0	0.313	0.313	0.000	0.000	0.000	1.50	90	0.00	A234/WPBWPB/	0.00	0.00	0.00	50	300	-10	0	858.037	0.000	0.05560	0.00000	0.00000
EX-06.1A-03E	4	26.000	0	0.313	0.313	0.000	0.000	0.000	1.50	90	0.00	A234/WPBWPB/	0.00	0.00	0.00	50	300	-10	0	858.037	0.000	0.05560	0.00000	0.00000
EX-06.1A-04N	30	26.000	0	0.313	0.375	0.000	0.000	0.000	0.00	90	0.00	A234/WPBWPB/	0.00	0.00	0.00	50	300	-10	0	858.037	0.000	0.05560	0.00000	0.00000
Line Name : EX-06.1B LP EXT 19 to FWH 31B																								
EX-06.1B-01N	31	26.000	0	0.313	0.400	0.000	0.000	0.000	0.00	90	0.00	A516/6060/	0.00	0.00	0.00	50	300	-10	0	858.037	0.000	0.05560	0.00000	0.00000
EX-06.1B-02E	4	26.000	0	0.313	0.313	0.000	0.000	0.000	1.50	90	0.00	A234/WPBWPB/	0.00	0.00	0.00	50	300	-10	0	858.037	0.000	0.05560	0.00000	0.00000
EX-06.1B-03E	4	26.000	0	0.313	0.313	0.000	0.000	0.000	1.50	90	0.00	A234/WPBWPB/	0.00	0.00	0.00	50	300	-10	0	858.037	0.000	0.05560	0.00000	0.00000
EX-06.1B-04N	30	26.000	0	0.313	0.375	0.000	0.000	0.000	0.00	90	0.00	A234/WPBWPB/	0.00	0.00	0.00	50	300	-10	0	858.037	0.000	0.05560	0.00000	0.00000
Line Name : EX-06.1C LP EXT 19 to FWH 31C																								
EX-06.1C-01N	31	26.000	0	0.313	0.400	0.000	0.000	0.000	0.00	90	0.00	A516/6060/	0.00	0.00	0.00	50	300	-10	0	858.037	0.000	0.05560	0.00000	0.00000
EX-06.1C-02E	4	26.000	0	0.313	0.313	0.000	0.000	0.000	1.50	90	0.00	A234/WPBWPB/	0.00	0.00	0.00	50	300	-10	0	858.037	0.000	0.05560	0.00000	0.00000
EX-06.1C-03E	4	26.000	0	0.313	0.313	0.000	0.000	0.000	1.50	90	0.00	A234/WPBWPB/	0.00	0.00	0.00	50	300	-10	0	858.037	0.000	0.05560	0.00000	0.00000
EX-06.1C-04N	30	26.000	0	0.313	0.375	0.000	0.000	0.000	0.00	90	0.00	A234/WPBWPB/	0.00	0.00	0.00	50	300	-10	0	858.037	0.000	0.05560	0.00000	0.00000
Line Name : EX-06.2A LP EXT 17 to FWH 31A																								
EX-06.2A-01N	31	26.000	0	0.313	0.400	0.000	0.000	0.000	0.00	90	0.00	A516/6060/	0.00	0.00	0.00	50	300	-10	0	858.037	0.000	0.05560	0.00000	0.00000
EX-06.2A-02E	4	26.000	0	0.313	0.313	0.000	0.000	0.000	1.50	90	0.00	A234/WPBWPB/	0.00	0.00	0.00	50	300	-10	0	858.037	0.000	0.05560	0.00000	0.00000
EX-06.2A-03E	4	26.000	0	0.313	0.313	0.000	0.000	0.000	1.50	90	0.00	A234/WPBWPB/	0.00	0.00	0.00	50	300	-10	0	858.037	0.000	0.05560	0.00000	0.00000

Component Name	Geom Code	Pipe Size OD (in)	Sch.	Tnom (in)	Tinit (in)	Tcrit (in)	Br/Small End OD (in)	Br/Small Tnom (in)	R / D Ratio	Orient Angle (Deg.)	Pipe Length (in)	Spec/Type/ Class	Material Cr. (%)	Cu. (%)	Mo. (%)	Design Press. (psig)	Design Temp. (Deg. F)	Op. Press. (psig)	Op. Temp. (Deg. F)	Op. Enth. (Btu/lbm)	Op. Qual.	Flow Rate U/S Mn.	D/S Mn. (Mlbm/hr)	Br.
EX-06.2A-04N	30	26.000	0	0.313	0.375	0.000	0.000	0.000	0.00	90	0.00	A234/WPBWPB/	0.00	0.00	0.00	50	300	-10	0	858.037	0.000	0.05560	0.00000	0.00000
Line Name : EX-06.2B LP EXT 17 to FWH 31B																								
EX-06.2B-01N	31	26.000	0	0.313	0.400	0.000	0.000	0.000	0.00	90	0.00	A516/6060/	0.00	0.00	0.00	50	300	-10	0	858.037	0.000	0.05560	0.00000	0.00000
EX-06.2B-02E	4	26.000	0	0.313	0.313	0.000	0.000	0.000	1.50	90	0.00	A234/WPBWPB/	0.00	0.00	0.00	50	300	-10	0	858.037	0.000	0.05560	0.00000	0.00000
EX-06.2B-03E	4	26.000	0	0.313	0.313	0.000	0.000	0.000	1.50	90	0.00	A234/WPBWPB/	0.00	0.00	0.00	50	300	-10	0	858.037	0.000	0.05560	0.00000	0.00000
EX-06.2B-04N	30	26.000	0	0.313	0.375	0.000	0.000	0.000	0.00	90	0.00	A234/WPBWPB/	0.00	0.00	0.00	50	300	-10	0	858.037	0.000	0.05560	0.00000	0.00000
Line Name : EX-06.2C LP EXT 17 to FWH 31C																								
EX-06.2C-01N	31	26.000	0	0.313	0.400	0.000	0.000	0.000	0.00	90	0.00	A516/6060/	0.00	0.00	0.00	50	300	-10	0	858.037	0.000	0.05560	0.00000	0.00000
EX-06.2C-02E	4	26.000	0	0.313	0.313	0.000	0.000	0.000	1.50	90	0.00	A234/WPBWPB/	0.00	0.00	0.00	50	300	-10	0	858.037	0.000	0.05560	0.00000	0.00000
EX-06.2C-03E	4	26.000	0	0.313	0.313	0.000	0.000	0.000	1.50	90	0.00	A234/WPBWPB/	0.00	0.00	0.00	50	300	-10	0	858.037	0.000	0.05560	0.00000	0.00000
EX-06.2C-04N	30	26.000	0	0.313	0.375	0.000	0.000	0.000	0.00	90	0.00	A234/WPBWPB/	0.00	0.00	0.00	50	300	-10	0	858.037	0.000	0.05560	0.00000	0.00000
Line Name : EX-06.3A LP EXT 20 to FWH 31A																								
EX-06.3A-01N	31	26.000	0	0.313	0.400	0.000	0.000	0.000	0.00	90	0.00	A516/6060/	0.00	0.00	0.00	50	300	-10	0	858.037	0.000	0.05560	0.00000	0.00000
EX-06.3A-02E	4	26.000	0	0.313	0.313	0.000	0.000	0.000	1.50	90	0.00	A234/WPBWPB/	0.00	0.00	0.00	50	300	-10	0	858.037	0.000	0.05560	0.00000	0.00000
EX-06.3A-03P	54	26.000	0	0.313	0.313	0.000	0.000	0.000	0.00	90	0.00	A155/C552/	0.00	0.00	0.00	50	300	-10	0	858.037	0.000	0.05560	0.00000	0.00000
EX-06.3A-04E	1	26.000	0	0.313	0.313	0.000	0.000	0.000	1.50	90	0.00	A234/WPBWPB/	0.00	0.00	0.00	50	300	-10	0	858.037	0.000	0.05560	0.00000	0.00000
EX-06.3A-05N	30	26.000	0	0.313	0.375	0.000	0.000	0.000	0.00	90	0.00	A234/WPBWPB/	0.00	0.00	0.00	50	300	-10	0	858.037	0.000	0.05560	0.00000	0.00000
Line Name : EX-06.3B LP EXT 20 to FWH 31B																								
EX-06.3B-01N	31	26.000	0	0.313	0.400	0.000	0.000	0.000	0.00	90	0.00	A516/6060/	0.00	0.00	0.00	50	300	-10	0	858.037	0.000	0.05560	0.00000	0.00000
EX-06.3B-02E	4	26.000	0	0.313	0.313	0.000	0.000	0.000	1.50	90	0.00	A234/WPBWPB/	0.00	0.00	0.00	50	300	-10	0	858.037	0.000	0.05560	0.00000	0.00000
EX-06.3B-03P	54	26.000	0	0.313	0.313	0.000	0.000	0.000	0.00	90	0.00	A155/C552/	0.00	0.00	0.00	50	300	-10	0	858.037	0.000	0.05560	0.00000	0.00000
EX-06.3B-04E	2	26.000	0	0.313	0.313	0.000	0.000	0.000	1.50	90	0.00	A234/WPBWPB/	0.00	0.00	0.00	50	300	-10	0	858.037	0.000	0.05560	0.00000	0.00000
EX-06.3B-05N	30	26.000	0	0.313	0.375	0.000	0.000	0.000	0.00	90	0.00	A234/WPBWPB/	0.00	0.00	0.00	50	300	-10	0	858.037	0.000	0.05560	0.00000	0.00000
Line Name : EX-06.3C LP EXT 20 to FWH 31C																								
EX-06.3C-01N	31	26.000	0	0.313	0.400	0.000	0.000	0.000	0.00	90	0.00	A516/6060/	0.00	0.00	0.00	50	300	-10	0	858.037	0.000	0.05560	0.00000	0.00000
EX-06.3C-02E	4	26.000	0	0.313	0.313	0.000	0.000	0.000	1.50	90	0.00	A234/WPBWPB/	0.00	0.00	0.00	50	300	-10	0	858.037	0.000	0.05560	0.00000	0.00000
EX-06.3C-03P	54	26.000	0	0.313	0.313	0.000	0.000	0.000	0.00	90	0.00	A155/C552/	0.00	0.00	0.00	50	300	-10	0	858.037	0.000	0.05560	0.00000	0.00000
EX-06.3C-04E	2	26.000	0	0.313	0.313	0.000	0.000	0.000	1.50	90	0.00	A234/WPBWPB/	0.00	0.00	0.00	50	300	-10	0	858.037	0.000	0.05560	0.00000	0.00000
EX-06.3C-05N	30	26.000	0	0.313	0.375	0.000	0.000	0.000	0.00	90	0.00	A234/WPBWPB/	0.00	0.00	0.00	50	300	-10	0	858.037	0.000	0.05560	0.00000	0.00000
Line Name : EX-06.4A LP EXT 18 to FWH 31A																								
EX-06.4A-01N	31	26.000	0	0.313	0.400	0.000	0.000	0.000	0.00	90	0.00	A516/6060/	0.00	0.00	0.00	50	300	-10	0	858.037	0.000	0.05560	0.00000	0.00000
EX-06.4A-02E	3	26.000	0	0.313	0.313	0.000	0.000	0.000	1.50	90	0.00	A234/WPBWPB/	0.00	0.00	0.00	50	300	-10	0	858.037	0.000	0.05560	0.00000	0.00000
EX-06.4A-03P	53	26.000	0	0.313	0.313	0.000	0.000	0.000	0.00	135	0.00	A155/C552/	0.00	0.00	0.00	50	300	-10	0	858.037	0.000	0.05560	0.00000	0.00000
EX-06.4A-04E	2	26.000	0	0.313	0.313	0.000	0.000	0.000	1.50	90	0.00	A234/WPBWPB/	0.00	0.00	0.00	50	300	-10	0	858.037	0.000	0.05560	0.00000	0.00000
EX-06.4A-05N	30	26.000	0	0.313	0.375	0.000	0.000	0.000	0.00	90	0.00	A234/WPBWPB/	0.00	0.00	0.00	50	300	-10	0	858.037	0.000	0.05560	0.00000	0.00000
Line Name : EX-06.4B LP EXT 18 to FWH 31B																								
EX-06.4B-01N	31	26.000	0	0.313	0.400	0.000	0.000	0.000	0.00	90	0.00	A516/6060/	0.00	0.00	0.00	50	300	-10	0	858.037	0.000	0.05560	0.00000	0.00000
EX-06.4B-02E	3	26.000	0	0.313	0.313	0.000	0.000	0.000	1.50	90	0.00	A234/WPBWPB/	0.00	0.00	0.00	50	300	-10	0	858.037	0.000	0.05560	0.00000	0.00000
EX-06.4B-03P	53	26.000	0	0.313	0.313	0.000	0.000	0.000	0.00	135	0.00	A155/C552/	0.00	0.00	0.00	50	300	-10	0	858.037	0.000	0.05560	0.00000	0.00000
EX-06.4B-04E	2	26.000	0	0.313	0.313	0.000	0.000	0.000	1.50	90	0.00	A234/WPBWPB/	0.00	0.00	0.00	50	300	-10	0	858.037	0.000	0.05560	0.00000	0.00000
EX-06.4B-05N	30	26.000	0	0.313	0.375	0.000	0.000	0.000	0.00	90	0.00	A234/WPBWPB/	0.00	0.00	0.00	50	300	-10	0	858.037	0.000	0.05560	0.00000	0.00000
Line Name : EX-06.4C LP EXT 18 to FWH 31C																								
EX-06.4C-01N	31	26.000	0	0.313	0.400	0.000	0.000	0.000	0.00	90	0.00	A516/6060/	0.00	0.00	0.00	50	300	-10	0	858.037	0.000	0.05560	0.00000	0.00000

Component Name	Geom Code	Pipe Size OD (in)	Sch.	Tnom (in)	Tinit (in)	Tcrit (in)	Br/Small End OD (in)	Br/Small Tnom (in)	R / D Ratio	Orient Angle (Deg.)	Pipe Length (in)	Spec/Type/ Class	Material Cr. (%)	Cu. (%)	Mo. (%)	Design Press. (psig)	Design Temp. (Deg. F)	Op. Press. (psig)	Op. Temp. (Deg. F)	Op. Enth. (Btu/lbm)	Op. Qual.	Flow Rate U/S Mn. (Mlbm/hr)	D/S Mn. (Mlbm/hr)	Br.
EX-06.4C-02E	3	26.000	0	0.313	0.313	0.000	0.000	0.000	1.50	90	0.00	A234/WPBWPB/	0.00	0.00	0.00	50	300	-10	0	858.037	0.000	0.05560	0.00000	0.00000
EX-06.4C-03P	53	26.000	0	0.313	0.313	0.000	0.000	0.000	0.00	135	0.00	A155/C552/	0.00	0.00	0.00	50	300	-10	0	858.037	0.000	0.05560	0.00000	0.00000
EX-06.4C-04E	2	26.000	0	0.313	0.313	0.000	0.000	0.000	1.50	90	0.00	A234/WPBWPB/	0.00	0.00	0.00	50	300	-10	0	858.037	0.000	0.05560	0.00000	0.00000
EX-06.4C-05N	30	26.000	0	0.313	0.375	0.000	0.000	0.000	0.00	90	0.00	A234/WPBWPB/	0.00	0.00	0.00	50	300	-10	0	858.037	0.000	0.05560	0.00000	0.00000
Line Name : FW-01.1A BFP 31 to RCIRC T																								
FW-01.1A-01N	31	16.000	1	1.031	1.031	0.000	0.000	0.000	0.00	90	0.00	A-217/C5/	5.00	0.00	0.50	1440	450	1038	367	0.000	0.000	6.51200	0.00000	0.00000
FW-01.1A-02P	61	16.000	100	1.031	1.075	0.000	0.000	0.000	0.00	0	3.00	A106/BB/	0.00	0.00	0.00	1440	450	1038	367	0.000	0.000	6.51200	0.00000	0.00000
FW-01.1A-03R	18	20.000	80	1.031	1.095	0.000	16.000	1.031	0.00	0	0.00	A234/WPBWPB/	0.00	0.00	0.00	1440	450	1038	367	0.000	0.000	6.51200	6.51200	0.00000
FW-01.2A-01E	4	20.000	1	1.031	1.031	0.000	0.000	0.000	1.00	90	0.00	A234/WPCWPC/	0.00	0.00	0.00	1440	450	1038	367	0.000	0.000	6.51200	0.00000	0.00000
FW-01.2A-02P	54	20.000	80	1.031	1.043	0.000	0.000	0.000	0.00	90	18.00	A106/CC/	0.00	0.00	0.00	1440	450	1038	367	0.000	0.000	6.51200	0.00000	0.00000
FW-01.2A-03T	15	20.000	80	1.031	1.039	0.000	6.625	0.864	0.00	90	0.00	A106/CC/	0.00	0.00	0.00	1440	450	1038	367	0.000	0.000	6.51200	6.51200	0.00000
Line Name : FW-01.1B BFP 32 to RCIRC T																								
FW-01.1B-01N	31	16.000	1	1.031	1.031	0.000	0.000	0.000	0.00	90	0.00	A-217/C5/	5.00	0.00	0.50	1440	450	1038	367	0.000	0.000	6.51200	0.00000	0.00000
FW-01.1B-02P	61	16.000	100	1.031	1.176	0.000	0.000	0.000	0.00	0	3.00	A106/BB/	0.00	0.00	0.00	1440	450	1038	367	0.000	0.000	6.51200	0.00000	0.00000
FW-01.1B-03R	18	20.000	80	1.031	1.095	0.000	16.000	1.031	0.00	0	0.00	A234/WPBWPB/	0.00	0.00	0.00	1440	450	1038	367	0.000	0.000	6.51200	6.51200	0.00000
FW-01.2B-01E	4	20.000	1	1.031	1.031	0.000	0.000	0.000	1.00	90	0.00	A234/WPCWPC/	0.00	0.00	0.00	1440	450	1038	367	0.000	0.000	6.51200	0.00000	0.00000
FW-01.2B-02P	54	20.000	1	1.031	1.031	0.000	0.000	0.000	0.00	90	42.50	A106/CC/	0.00	0.00	0.00	1440	450	1038	367	0.000	0.000	6.51200	0.00000	0.00000
FW-01.2B-03E	1	20.000	80	1.031	1.251	0.000	0.000	0.000	1.50	90	0.00	A234/WPCWPC/	0.00	0.00	0.00	1440	450	1038	367	0.000	0.000	6.51200	0.00000	0.00000
FW-01.2B-04P	51	20.000	80	1.031	1.032	0.000	0.000	0.000	0.00	90	6.00	A106/CC/	0.00	0.00	0.00	1440	450	1038	367	0.000	0.000	6.51200	0.00000	0.00000
FW-01.2B-05T	15	20.000	80	1.031	1.036	0.000	6.625	0.864	0.00	90	0.00	A106/CC/	0.00	0.00	0.00	1440	450	1038	367	0.000	0.000	6.51200	6.51200	0.00000
Line Name : FW-01.2A BFP31 RCIRC T to HDR																								
FW-01.2A-04P	65	20.000	80	1.031	1.039	0.000	0.000	0.000	0.00	90	54.00	A106/CC/	0.00	0.00	0.00	1440	450	1038	367	0.000	0.000	6.51200	0.00000	0.00000
FW-01.2A-05V	25	20.000	1	1.031	1.031	0.000	0.000	0.000	0.00	90	0.00	A216/WCBWCB/	0.00	0.00	0.00	1440	450	1038	367	0.000	0.000	6.51200	0.00000	0.00000
FW-01.2A-06V	22	20.000	1	1.031	1.031	0.000	0.000	0.000	0.00	90	0.00	A216/WCBWCB/	0.00	0.00	0.00	1440	450	1038	367	0.000	0.000	6.51200	0.00000	0.00000
FW-01.2A-07E	4	20.000	1	1.031	1.031	0.000	0.000	0.000	1.50	90	0.00	A234/WPCWPC/	0.00	0.00	0.00	1440	450	1038	367	0.000	0.000	6.51200	0.00000	0.00000
FW-01.2A-08T	15	20.000	1	1.031	1.031	0.000	10.750	0.719	0.00	90	0.00	A106/CC/	0.00	0.00	0.00	1440	450	1038	367	0.000	0.000	6.51200	6.51200	0.00000
FW-01.2A-09P	65	20.000	1	1.031	1.031	0.000	0.000	0.000	0.00	90	30.00	A106/CC/	0.00	0.00	0.00	1440	450	1038	367	0.000	0.000	6.51200	0.00000	0.00000
FW-01.2A-10E	2	20.000	1	1.031	1.031	0.000	0.000	0.000	1.50	90	0.00	A234/WPCWPC/	0.00	0.00	0.00	1440	450	1038	367	0.000	0.000	6.51200	0.00000	0.00000
FW-01.2A-11P	52	20.000	1	1.031	1.031	0.000	0.000	0.000	0.00	90	60.00	A106/CC/	0.00	0.00	0.00	1440	450	1038	367	0.000	0.000	6.51200	0.00000	0.00000
FW-01.2A-12E	2	20.000	1	1.031	1.031	0.000	0.000	0.000	1.50	90	0.00	A234/WPCWPC/	0.00	0.00	0.00	1440	450	1038	367	0.000	0.000	6.51200	0.00000	0.00000
FW-01.2A-13P	52	20.000	1	1.031	1.031	0.000	0.000	0.000	0.00	0	31.00	A106/CC/	0.00	0.00	0.00	1440	450	1038	367	0.000	0.000	6.51200	0.00000	0.00000
FW-01.2A-14E	2	20.000	1	1.031	1.031	0.000	0.000	0.000	1.50	90	0.00	A234/WPCWPC/	0.00	0.00	0.00	1440	450	1038	367	0.000	0.000	6.51200	0.00000	0.00000
FW-01.2A-15P_1	52	20.000	1	1.031	1.031	0.000	0.000	0.000	0.00	90	300.00	A106/CC/	0.00	0.00	0.00	1440	450	1038	367	0.000	0.000	6.51200	0.00000	0.00000
FW-01.2A-15P_2	9	20.000	1	1.031	1.031	0.000	0.000	0.000	0.00	90	50.00	A106/CC/	0.00	0.00	0.00	1440	450	1038	367	0.000	0.000	6.51200	0.00000	0.00000
FW-01.2A-16E	2	20.000	1	1.031	1.031	0.000	0.000	0.000	1.50	90	0.00	A234/WPCWPC/	0.00	0.00	0.00	1440	450	1038	367	0.000	0.000	6.51200	0.00000	0.00000
FW-01.2A-17P	52	20.000	1	1.031	1.031	0.000	0.000	0.000	0.00	90	270.00	A106/CC/	0.00	0.00	0.00	1440	450	1038	367	0.000	0.000	6.51200	0.00000	0.00000
FW-01.2A-18E	2	20.000	1	1.031	1.031	0.000	0.000	0.000	1.50	90	0.00	A234/WPCWPC/	0.00	0.00	0.00	1440	450	1038	367	0.000	0.000	6.51200	0.00000	0.00000
FW-01.2A-19P	52	20.000	1	1.031	1.031	0.000	0.000	0.000	0.00	180	30.00	A106/CC/	0.00	0.00	0.00	1440	450	1038	367	0.000	0.000	6.51200	0.00000	0.00000
FW-01.2A-20E	2	20.000	1	1.031	1.031	0.000	0.000	0.000	1.50	90	0.00	A234/WPCWPC/	0.00	0.00	0.00	1440	450	1038	367	0.000	0.000	6.51200	0.00000	0.00000
FW-01.2A-21P	52	20.000	1	1.031	1.031	0.000	0.000	0.000	0.00	90	198.00	A106/CC/	0.00	0.00	0.00	1440	450	1038	367	0.000	0.000	6.51200	0.00000	0.00000
FW-01.2A-22E	2	20.000	1	1.031	1.031	0.000	0.000	0.000	1.50	90	0.00	A234/WPCWPC/	0.00	0.00	0.00	1440	450	1038	367	0.000	0.000	6.51200	0.00000	0.00000
FW-01.2A-23P	52	20.000	80	1.031	1.053	0.000	0.000	0.000	0.00	0	60.00	A106/CC/	0.00	0.00	0.00	1440	450	1038	367	0.000	0.000	6.51200	0.00000	0.00000
Line Name : FW-01.2B BFP32 RCIRC T to HDR																								
FW-01.2B-06P	65	20.000	80	1.031	1.057	0.000	0.000	0.000	0.00	90	42.00	A106/CC/	0.00	0.00	0.00	1440	450	1038	367	0.000	0.000	6.51200	0.00000	0.00000
FW-01.2B-07V	25	20.000	1	1.031	1.031	0.000	0.000	0.000	0.00	90	0.00	A216/WCBWCB/	0.00	0.00	0.00	1440	450	1038	367	0.000	0.000	6.51200	0.00000	0.00000
FW-01.2B-08V	22	20.000	1	1.031	1.031	0.000	0.000	0.000	0.00	90	0.00	A216/WCBWCB/	0.00	0.00	0.00	1440	450	1038	367	0.000	0.000	6.51200	0.00000	0.00000
FW-01.2B-09E	4	20.000	1	1.031	1.031	0.000	0.000	0.000	1.50	90	0.00	A234/WPCWPC/	0.00	0.00	0.00	1440	450	1038	367	0.000	0.000	6.51200	0.00000	0.00000
FW-01.2B-10P	54	20.000	1	1.031	1.031	0.000	0.000	0.000	0.00	90	12.00	A106/CC/	0.00	0.00	0.00	1440	450	1038	367	0.000	0.000	6.51200	0.00000	0.00000
FW-01.2B-11T	15	20.000	1	1.031	1.031	0.000	10.750	0.719	0.00	90	0.00	A106/CC/	0.00	0.00	0.00	1440	450	1038	367	0.000	0.000	6.51200	6.51200	0.00000
FW-01.2B-12P	65	20.000	1	1.031	1.031	0.000	0.000	0.000	0.00	90	30.00	A106/CC/	0.00	0.00	0.00	1440	450	1038	367	0.000	0.000	6.51200	0.00000	0.00000
FW-01.2B-13E	2	20.000	1	1.031	1.031	0.000	0.000	0.000	1.50	90	0.00	A234/WPCWPC/	0.00	0.00	0.00	1440	450	1038	367	0.000	0.000	6.51200	0.00000	0.00000
FW-01.2B-14P	52	20.000	1	1.031	1.031	0.000	0.000	0.000	0.00	90	87.00	A106/CC/	0.00	0.00	0.00	1440	450	1038	367	0.000	0.000	6.51200	0.00000	0.00000
FW-01.2B-15E	2	20.000	1	1.031	1.031	0.000	0.000	0.000	1.50	90	0.00	A234/WPCWPC/	0.00	0.00	0.00	1440	450	1038	367	0.000	0.000	6.51200	0.00000	0.00000
FW-01.2B-16P	52	20.000	1	1.031	1.031	0.000	0.000	0.000	0.00	0	31.00	A106/CC/	0.00	0.00	0.00	1440	450	1038	367	0.000	0.000	6.51200	0.00000	0.00000

Component Name	Geom Code	Pipe Size OD (in)	Sch.	Tnom (in)	Tinit (in)	Tcrit (in)	Br/Small End OD (in)	Br/Small Tnom (in)	R / D Ratio	Orient Angle (Deg.)	Pipe Length (in)	Spec/Type/ Class	Material Cr. (%)	Cu. (%)	Mo. (%)	Design Press. (psig)	Design Temp. (Deg. F)	Op. Press. (psig)	Op. Temp. (Deg. F)	Op. Enth. (Btu/lbm)	Op. Qual.	Flow Rate U/S Mn. (Mlbm/hr)	D/S Mn. (Mlbm/hr)	Br.
FW-01.2B.17E	2	20.000	1	1.031	1.031	0.000	0.000	0.000	1.50	90	0.00	A234/WPCWPC/	0.00	0.00	0.00	1440	450	1038	367	0.000	0.000	6.51200	0.00000	0.00000
FW-01.2B-18P	52	20.000	1	1.031	1.031	0.000	0.000	0.000	0.00	90	190.00	A106/CC/	0.00	0.00	0.00	1440	450	1038	367	0.000	0.000	6.51200	0.00000	0.00000
FW-01.2B-19E	2	20.000	1	1.031	1.031	0.000	0.000	0.000	1.50	90	0.00	A234/WPCWPC/	0.00	0.00	0.00	1440	450	1038	367	0.000	0.000	6.51200	0.00000	0.00000
FW-01.2B-20P	52	20.000	1	1.031	1.031	0.000	0.000	0.000	0.00	180	30.00	A106/CC/	0.00	0.00	0.00	1440	450	1038	367	0.000	0.000	6.51200	0.00000	0.00000
FW-01.2B-21E	2	20.000	1	1.031	1.031	0.000	0.000	0.000	1.50	90	0.00	A234/WPCWPC/	0.00	0.00	0.00	1440	450	1038	367	0.000	0.000	6.51200	0.00000	0.00000
FW-01.2B-22P	52	20.000	1	1.031	1.031	0.000	0.000	0.000	0.00	90	87.00	A106/CC/	0.00	0.00	0.00	1440	450	1038	367	0.000	0.000	6.51200	0.00000	0.00000
FW-01.2B-23E	2	20.000	1	1.031	1.031	0.000	0.000	0.000	1.50	90	0.00	A234/WPCWPC/	0.00	0.00	0.00	1440	450	1038	367	0.000	0.000	6.51200	0.00000	0.00000
FW-01.2B-24P	52	20.000	1	1.031	1.031	0.000	0.000	0.000	0.00	0	30.00	A106/CC/	0.00	0.00	0.00	1440	450	1038	367	0.000	0.000	6.51200	0.00000	0.00000
FW-01.2B-25E	2	20.000	1	1.031	1.031	0.000	0.000	0.000	1.50	90	0.00	A234/WPCWPC/	0.00	0.00	0.00	1440	450	1038	367	0.000	0.000	6.51200	0.00000	0.00000
FW-01.2B-26P	52	20.000	1	1.031	1.031	0.000	0.000	0.000	0.00	90	18.00	A106/CC/	0.00	0.00	0.00	1440	450	1038	367	0.000	0.000	6.51200	0.00000	0.00000
FW-01.2B-27R	18	30.000	1	1.260	0.000	0.000	20.000	1.031	0.00	90	0.00	A234/WPCWPC/	0.00	0.00	0.00	1440	450	1038	367	0.000	0.000	6.51200	6.51200	0.00000
Line Name : FW-01.3 BFP DISCHARGE HDR																								
FW-01.3-01T	12	30.000	1	1.260	1.375	0.000	20.000	1.031	0.00	90	0.00	A155/KC701/	0.00	0.00	0.00	1440	450	1038	367	0.000	0.000	6.51200	13.02400	6.51200
FW-01.3-02P	62	30.000	1	1.260	1.371	0.000	0.000	0.000	0.00	90	24.00	A155/KC701/	0.00	0.00	0.00	1440	450	1038	367	0.000	0.000	13.02400	0.00000	0.00000
FW-01.3-03E	4	30.000	1	1.260	1.514	0.000	0.000	0.000	1.50	90	0.00	A234/WPCWPC/	0.00	0.00	0.00	1440	450	1038	367	0.000	0.000	13.02400	0.00000	0.00000
FW-01.3-04E	4	30.000	1	1.260	1.638	0.000	0.000	0.000	1.50	90	0.00	A234/WPCWPC/	0.00	0.00	0.00	1440	450	1038	367	0.000	0.000	13.02400	0.00000	0.00000
FW-01.3-05P	54	30.000	1	1.260	1.260	0.000	0.000	0.000	0.00	90	111.00	A155/KC701/	0.00	0.00	0.00	1440	450	1038	367	0.000	0.000	13.02400	0.00000	0.00000
FW-01.3-06E	2	30.000	1	1.260	1.260	0.000	0.000	0.000	1.00	90	0.00	A234/WPCWPC/	0.00	0.00	0.00	1440	450	1038	367	0.000	0.000	13.02400	0.00000	0.00000
FW-01.3-07P	52	30.000	1	1.260	1.260	0.000	0.000	0.000	0.00	0	18.00	A155/KC701/	0.00	0.00	0.00	1440	450	1038	367	0.000	0.000	13.02400	0.00000	0.00000
FW-01.3-08E	4	30.000	1	1.260	1.260	0.000	0.000	0.000	1.00	90	0.00	A234/WPCWPC/	0.00	0.00	0.00	1440	450	1038	367	0.000	0.000	13.02400	0.00000	0.00000
FW-01.3-09P	54	30.000	1	1.260	1.260	0.000	0.000	0.000	0.00	90	96.00	A155/KC701/	0.00	0.00	0.00	1440	450	1038	367	0.000	0.000	13.02400	0.00000	0.00000
FW-01.3-10E	2	30.000	1	1.260	1.260	0.000	0.000	0.000	1.50	90	0.00	A234/WPCWPC/	0.00	0.00	0.00	1440	450	1038	367	0.000	0.000	13.02400	0.00000	0.00000
FW-01.3-11P	52	30.000	1	1.260	1.260	0.000	0.000	0.000	0.00	90	374.00	A155/KC701/	0.00	0.00	0.00	1440	450	1038	367	0.000	0.000	13.02400	0.00000	0.00000
FW-01.3-12E	2	30.000	1	1.260	1.260	0.000	0.000	0.000	1.50	90	0.00	A234/WPCWPC/	0.00	0.00	0.00	1440	450	1038	367	0.000	0.000	13.02400	0.00000	0.00000
FW-01.3-13P	52	30.000	1	1.260	1.260	0.000	0.000	0.000	0.00	90	303.00	A155/KC701/	0.00	0.00	0.00	1440	450	1038	367	0.000	0.000	13.02400	0.00000	0.00000
FW-01.3-14E	2	30.000	1	1.260	1.260	0.000	0.000	0.000	1.50	90	0.00	A234/WPCWPC/	0.00	0.00	0.00	1440	450	1038	367	0.000	0.000	13.02400	0.00000	0.00000
FW-01.3-15E	4	30.000	1	1.260	1.260	0.000	0.000	0.000	1.50	90	0.00	A234/WPCWPC/	0.00	0.00	0.00	1440	450	1038	367	0.000	0.000	13.02400	0.00000	0.00000
FW-01.3-16P	54	30.000	1	1.260	1.260	0.000	0.000	0.000	0.00	90	6.00	A155/KC701/	0.00	0.00	0.00	1440	450	1038	367	0.000	0.000	13.02400	0.00000	0.00000
FW-01.3-17T	15	30.000	1	1.260	1.260	0.000	18.000	0.938	0.00	90	0.00	A155/KC701/	0.00	0.00	0.00	1440	450	1038	367	0.000	0.000	13.02400	13.02400	0.00000
FW-01.3-18P	65	30.000	1	1.260	1.348	0.000	0.000	0.000	0.00	90	48.00	A155/KC701/	0.00	0.00	0.00	1440	450	1038	367	0.000	0.000	13.02400	0.00000	0.00000
FW-01.4-01T	14	30.000	1	1.260	1.351	0.000	18.000	0.938	0.00	90	0.00	A155/KC701/	0.00	0.00	0.00	1440	450	1038	367	0.000	0.000	13.02400	8.68267	4.34133
Line Name : FW-01.4 BFP DISCHARGE HDR																								
FW-01.4-02P	63	30.000	1	1.260	1.341	0.000	0.000	0.000	0.00	90	102.00	A155/KC701/	0.00	0.00	0.00	1440	450	1038	367	0.000	0.000	8.68300	0.00000	0.00000
FW-01.5-01T	14	30.000	1	1.260	1.385	0.000	18.000	0.938	0.00	90	0.00	A155/KC701/	0.00	0.00	0.00	1440	450	1038	367	0.000	0.000	8.68267	4.34133	4.34133
Line Name : FW-01.6A BFP HDR to FWH 36A																								
FW-01.6A-01R	7	30.000	1	1.260	0.000	0.000	18.000	0.938	0.00	90	0.00	A234/WPCWPC/	0.00	0.00	0.00	1440	450	1038	367	0.000	0.000	4.34133	4.34133	0.00000
FW-01.6A-02P	57	18.000	80	0.938	1.009	0.000	0.000	0.000	0.00	90	55.00	A106/CC/	0.00	0.00	0.00	1440	450	1038	367	0.000	0.000	4.34133	0.00000	0.00000
FW-01.6A-03E	2	18.000	0	0.938	0.938	0.000	0.000	0.000	1.50	90	0.00	A234/WPCWPC/	0.00	0.00	0.00	1440	450	1038	367	0.000	0.000	4.34133	0.00000	0.00000
FW-01.6A-04P	52	18.000	0	0.938	0.938	0.000	0.000	0.000	0.00	0	81.00	A106/CC/	0.00	0.00	0.00	1440	450	1038	367	0.000	0.000	4.34133	0.00000	0.00000
FW-01.6A-05E	2	18.000	0	0.938	0.938	0.000	0.000	0.000	1.50	90	0.00	A234/WPCWPC/	0.00	0.00	0.00	1440	450	1038	367	0.000	0.000	4.34133	0.00000	0.00000
FW-01.6A-06P	52	18.000	0	0.938	0.938	0.000	0.000	0.000	0.00	90	40.00	A106/CC/	0.00	0.00	0.00	1440	450	1038	367	0.000	0.000	4.34133	0.00000	0.00000
FW-01.6A-07V	22	18.000	0	0.938	0.938	0.000	0.000	0.000	0.00	90	0.00	A216/WCBWCB/	0.00	0.00	0.00	1440	450	1038	367	0.000	0.000	4.34133	0.00000	0.00000
FW-01.6A-08E	4	18.000	0	0.938	0.938	0.000	0.000	0.000	1.00	90	0.00	A234/WPCWPC/	0.00	0.00	0.00	1440	450	1038	367	0.000	0.000	4.34133	0.00000	0.00000
FW-01.6A-09P	54	18.000	0	0.938	0.938	0.000	0.000	0.000	0.00	0	4.00	A106/CC/	0.00	0.00	0.00	1440	450	1038	367	0.000	0.000	4.34133	0.00000	0.00000
FW-01.6A-10E	3	18.000	0	0.938	0.938	0.000	0.000	0.000	1.50	90	0.00	A234/WPCWPC/	0.00	0.00	0.00	1440	450	1038	367	0.000	0.000	4.34133	0.00000	0.00000
FW-01.6A-11P	53	18.000	0	0.938	0.938	0.000	0.000	0.000	0.00	30	7.00	A106/CC/	0.00	0.00	0.00	1440	450	1038	367	0.000	0.000	4.34133	0.00000	0.00000
FW-01.6A-12N	30	18.000	0	0.938	0.938	0.000	0.000	0.000	0.00	90	0.00	A105/A105A10/	0.00	0.00	0.00	1440	450	1038	367	0.000	0.000	4.34133	0.00000	0.00000
Line Name : FW-01.6B BFP HDR to FWH 36B																								
FW-01.6B-02P	64	18.000	80	0.938	0.930	0.000	0.000	0.000	0.00	0	108.00	A106/CC/	0.00	0.00	0.00	1440	450	1038	367	0.000	0.000	4.34133	0.00000	0.00000
FW-01.6B-03E	2	18.000	0	0.938	0.938	0.000	0.000	0.000	1.50	90	0.00	A234/WPCWPC/	0.00	0.00	0.00	1440	450	1038	367	0.000	0.000	4.34133	0.00000	0.00000
FW-01.6B-04P	52	18.000	0	0.938	0.938	0.000	0.000	0.000	0.00	90	40.00	A106/CC/	0.00	0.00	0.00	1440	450	1038	367	0.000	0.000	4.34133	0.00000	0.00000
FW-01.6B-05V	22	18.000	0	0.938	0.938	0.000	0.000	0.000	0.00	90	0.00	A216/WCBWCB/	0.00	0.00	0.00	1440	450	1038	367	0.000	0.000	4.34133	0.00000	0.00000
FW-01.6B-06E	4	18.000	0	0.938	0.938	0.000	0.000	0.000	1.00	90	0.00	A234/WPCWPC/	0.00	0.00	0.00	1440	450	1038	367	0.000	0.000	4.34133	0.00000	0.00000
FW-01.6B-07P	54	18.000	0	0.938	0.938	0.000	0.000	0.000	0.00	0	0.00	A106/CC/	0.00	0.00	0.00	1440	450	1038	367	0.000	0.000	4.34133	0.00000	0.00000
FW-01.6B-08E	3	18.000	0	0.938	0.938	0.000	0.000	0.000	1.50	90	0.00	A234/WPCWPC/	0.00	0.00	0.00	1440	450	1038	367	0.000	0.000	4.34133	0.00000	0.00000

Component Name	Geom Code	Pipe Size OD (in)	Sch.	Tnom (in)	Tinit (in)	Tcrit (in)	Br/Small End OD (in)	Br/Small Tnom (in)	R / D Ratio	Orient Angle (Deg.)	Pipe Length (in)	Spec/Type/ Class	Material Cr. (%)	Cu. (%)	Mo. (%)	Design Press. (psig)	Design Temp. (Deg. F)	Op. Press. (psig)	Op. Temp. (Deg. F)	Op. Enth. (Btu/lbm)	Op. Qual.	Flow Rate U/S Mn. (Mlbm/hr)	D/S Mn. (Mlbm/hr)	Br.
FW-01.6B-10N	30	18.000	0	0.938	0.938	0.000	0.000	0.000	0.00	90	0.00	A105/A105A10/	0.00	0.00	0.00	1440	450	1038	367	0.000	0.000	4.34133	0.00000	0.00000
Line Name : FW-01.6C BFP HDR to FWH 36C																								
FW-01.6C-02P	64	18.000	0	0.938	0.938	0.000	0.000	0.000	0.00	0	108.00	A106/CC/	0.00	0.00	0.00	1440	450	1038	367	0.000	0.000	4.34133	0.00000	0.00000
FW-01.6C-03E	2	18.000	0	0.938	0.938	0.000	0.000	0.000	1.50	90	0.00	A234/WPCWPC/	0.00	0.00	0.00	1440	450	1038	367	0.000	0.000	4.34133	0.00000	0.00000
FW-01.6C-04P	52	18.000	0	0.938	0.938	0.000	0.000	0.000	0.00	90	40.00	A106/CC/	0.00	0.00	0.00	1440	450	1038	367	0.000	0.000	4.34133	0.00000	0.00000
FW-01.6C-05V	22	18.000	0	0.938	0.938	0.000	0.000	0.000	0.00	90	0.00	A216/WCBWCB/	0.00	0.00	0.00	1440	450	1038	367	0.000	0.000	4.34133	0.00000	0.00000
FW-01.6C-06E	4	18.000	0	0.938	0.938	0.000	0.000	0.000	1.00	90	0.00	A234/WPCWPC/	0.00	0.00	0.00	1440	450	1038	367	0.000	0.000	4.34133	0.00000	0.00000
FW-01.6C-08E	3	18.000	0	0.938	0.938	0.000	0.000	0.000	1.50	90	0.00	A234/WPCWPC/	0.00	0.00	0.00	1440	450	1038	367	0.000	0.000	4.34133	0.00000	0.00000
FW-01.6C-10N	30	18.000	0	0.938	0.938	0.000	0.000	0.000	0.00	90	0.00	A105/A105A10/	0.00	0.00	0.00	1440	450	1038	367	0.000	0.000	4.34133	0.00000	0.00000
Line Name : FW-02.1A FWH 36A to SG HDR																								
FW-02.1A-01N	31	18.000	0	0.938	0.938	0.000	0.000	0.000	0.00	90	0.00	A105/A105A10/	0.00	0.00	0.00	1440	450	1038	423	0.000	0.000	4.34133	0.00000	0.00000
FW-02.1A-02E	4	18.000	0	0.938	0.938	0.000	0.000	0.000	1.00	90	0.00	A234/WPCWPC/	0.00	0.00	0.00	1440	450	1038	423	0.000	0.000	4.34133	0.00000	0.00000
FW-02.1A-03P	54	18.000	0	0.938	0.938	0.000	0.000	0.000	0.00	90	11.00	A106/CC/	0.00	0.00	0.00	1440	450	1038	423	0.000	0.000	4.34133	0.00000	0.00000
FW-02.1A-04E	4	18.000	0	0.938	0.938	0.000	0.000	0.000	1.00	90	0.00	A234/WPCWPC/	0.00	0.00	0.00	1440	450	1038	423	0.000	0.000	4.34133	0.00000	0.00000
FW-02.1A-05V	22	18.000	0	0.938	0.938	0.000	0.000	0.000	0.00	180	0.00	A216/WCBWCB/	0.00	0.00	0.00	1440	450	1038	423	0.000	0.000	4.34133	0.00000	0.00000
FW-02.1A-06P	58	18.000	0	0.938	0.938	0.000	0.000	0.000	0.00	180	30.00	A106/CC/	0.00	0.00	0.00	1440	450	1038	423	0.000	0.000	4.34133	0.00000	0.00000
FW-02.1A-07E	2	18.000	0	0.938	0.938	0.000	0.000	0.000	1.50	90	0.00	A234/WPCWPC/	0.00	0.00	0.00	1440	450	1038	423	0.000	0.000	4.34133	0.00000	0.00000
FW-02.1A-08P	52	18.000	0	0.938	0.938	0.000	0.000	0.000	0.00	90	38.00	A106/CC/	0.00	0.00	0.00	1440	450	1038	423	0.000	0.000	4.34133	0.00000	0.00000
FW-02.1A-09E	2	18.000	0	0.938	0.938	0.000	0.000	0.000	1.00	90	0.00	A234/WPCWPC/	0.00	0.00	0.00	1440	450	1038	423	0.000	0.000	4.34133	0.00000	0.00000
FW-02.1A-10P	52	18.000	0	0.938	0.938	0.000	0.000	0.000	0.00	180	90.00	A106/CC/	0.00	0.00	0.00	1440	450	1038	423	0.000	0.000	4.34133	0.00000	0.00000
FW-02.1A-11E	2	18.000	0	0.938	0.938	0.000	0.000	0.000	1.50	90	0.00	A234/WPCWPC/	0.00	0.00	0.00	1440	450	1038	423	0.000	0.000	4.34133	0.00000	0.00000
FW-02.1A-12P	52	18.000	0	0.938	0.938	0.000	0.000	0.000	0.00	90	54.00	A106/CC/	0.00	0.00	0.00	1440	450	1038	423	0.000	0.000	4.34133	0.00000	0.00000
FW-02.1A-13R	18	30.000	1	1.260	0.000	0.000	18.000	0.938	0.00	90	0.00	A234/WPCWPC/	0.00	0.00	0.00	1440	450	1038	423	0.000	0.000	4.34133	4.34100	0.00000
Line Name : FW-02.3 SG INLET HEADER																								
FW-02.1B-11T	12	30.000	1	1.260	1.398	0.000	18.000	0.938	0.00	90	0.00	A155/KC701/	0.00	0.00	0.00	1440	450	1038	423	0.000	0.000	4.31433	8.68267	4.36833
Line Name : FW-02.1B FWH 36B to SG HDR																								
FW-02.1B-01N	31	18.000	0	0.938	0.938	0.000	0.000	0.000	0.00	90	0.00	A105/A105A10/	0.00	0.00	0.00	1440	450	1038	423	0.000	0.000	4.34133	0.00000	0.00000
FW-02.1B-02E	4	18.000	0	0.938	0.938	0.000	0.000	0.000	1.00	90	0.00	A234/WPCWPC/	0.00	0.00	0.00	1440	450	1038	423	0.000	0.000	4.34133	0.00000	0.00000
FW-02.1B-03P	54	18.000	0	0.938	0.938	0.000	0.000	0.000	0.00	90	11.00	A106/CC/	0.00	0.00	0.00	1440	450	1038	423	0.000	0.000	4.34133	0.00000	0.00000
FW-02.1B-04E	4	18.000	0	0.938	0.938	0.000	0.000	0.000	1.00	90	0.00	A234/WPCWPC/	0.00	0.00	0.00	1440	450	1038	423	0.000	0.000	4.34133	0.00000	0.00000
FW-02.1B-05V	22	18.000	0	0.938	0.938	0.000	0.000	0.000	0.00	180	0.00	A216/WCBWCB/	0.00	0.00	0.00	1440	450	1038	423	0.000	0.000	4.34133	0.00000	0.00000
FW-02.1B-06P	58	18.000	0	0.938	0.938	0.000	0.000	0.000	0.00	180	30.00	A106/CC/	0.00	0.00	0.00	1440	450	1038	423	0.000	0.000	4.34133	0.00000	0.00000
FW-02.1B-07E	2	18.000	0	0.938	0.938	0.000	0.000	0.000	1.50	90	0.00	A234/WPCWPC/	0.00	0.00	0.00	1440	450	1038	423	0.000	0.000	4.34133	0.00000	0.00000
FW-02.1B-08P	52	18.000	0	0.938	0.938	0.000	0.000	0.000	0.00	90	38.00	A106/CC/	0.00	0.00	0.00	1440	450	1038	423	0.000	0.000	4.34133	0.00000	0.00000
FW-02.1B-09E	2	18.000	0	0.938	0.938	0.000	0.000	0.000	1.00	90	0.00	A234/WPCWPC/	0.00	0.00	0.00	1440	450	1038	423	0.000	0.000	4.34133	0.00000	0.00000
FW-02.1B-10P	52	18.000	80	0.938	0.965	0.000	0.000	0.000	0.00	180	90.00	A106/CC/	0.00	0.00	0.00	1440	450	1038	423	0.000	0.000	4.34133	0.00000	0.00000
Line Name : FW-02.1C FWH 36C to SG HDR																								
FW-02.1C-01N	31	18.000	0	0.938	0.938	0.000	0.000	0.000	0.00	90	0.00	A105/A105A10/	0.00	0.00	0.00	1440	450	1038	423	0.000	0.000	4.34133	0.00000	0.00000
FW-02.1C-02E	4	18.000	0	0.938	0.938	0.000	0.000	0.000	1.00	90	0.00	A234/WPCWPC/	0.00	0.00	0.00	1440	450	1038	423	0.000	0.000	4.34133	0.00000	0.00000
FW-02.1C-03P	54	18.000	0	0.938	0.938	0.000	0.000	0.000	0.00	90	11.00	A106/CC/	0.00	0.00	0.00	1440	450	1038	423	0.000	0.000	4.34133	0.00000	0.00000
FW-02.1C-04E	4	18.000	0	0.938	0.938	0.000	0.000	0.000	1.00	90	0.00	A234/WPCWPC/	0.00	0.00	0.00	1440	450	1038	423	0.000	0.000	4.34133	0.00000	0.00000
FW-02.1C-05V	22	18.000	0	0.938	0.938	0.000	0.000	0.000	0.00	180	0.00	A216/WCBWCB/	0.00	0.00	0.00	1440	450	1038	423	0.000	0.000	4.34133	0.00000	0.00000
FW-02.1C-06P	58	18.000	0	0.938	0.938	0.000	0.000	0.000	0.00	180	30.00	A106/CC/	0.00	0.00	0.00	1440	450	1038	423	0.000	0.000	4.34133	0.00000	0.00000
FW-02.1C-07E	2	18.000	0	0.938	0.938	0.000	0.000	0.000	1.50	90	0.00	A234/WPCWPC/	0.00	0.00	0.00	1440	450	1038	423	0.000	0.000	4.34133	0.00000	0.00000
FW-02.1C-08P	52	18.000	0	0.938	0.938	0.000	0.000	0.000	0.00	90	38.00	A106/CC/	0.00	0.00	0.00	1440	450	1038	423	0.000	0.000	4.34133	0.00000	0.00000
FW-02.1C-09E	2	18.000	0	0.938	0.938	0.000	0.000	0.000	1.00	90	0.00	A234/WPCWPC/	0.00	0.00	0.00	1440	450	1038	423	0.000	0.000	4.34133	0.00000	0.00000
FW-02.1C-10P	52	18.000	80	0.938	0.998	0.000	0.000	0.000	0.00	180	90.00	A106/CC/	0.00	0.00	0.00	1440	450	1038	423	0.000	0.000	4.34133	0.00000	0.00000
Line Name : FW-02.3 SG INLET HEADER																								
FW-02.3-01P	62	30.000	1	1.260	1.380	0.000	0.000	0.000	0.00	90	96.00	A155/KC701/	0.00	0.00	0.00	1440	450	1038	423	0.000	0.000	8.68267	0.00000	0.00000

Component Name	Geom Code	Pipe Size OD (in)	Sch.	Tnom (in)	Tinit (in)	Tcrit (in)	Br/Small End OD (in)	Br/Small Tnom (in)	R / D Ratio	Orient Angle (Deg.)	Pipe Length (in)	Spec/Type/ Class	Material Cr. (%)	Cu. (%)	Mo. (%)	Design Press. (psig)	Design Temp. (Deg. F)	Op. Press. (psig)	Op. Temp. (Deg. F)	Op. Enth. (Btu/lbm)	Op. Qual.	Flow Rate U/S Mn. (Mlbm/hr)	D/S Mn. (Mlbm/hr)	Br.
Line Name : FW-02.4 SG INLET HEADER																								
FW-02.1C-11T	12	30.000	1	1.260	1.375	0.000	18.000	0.944	0.00	90	0.00	A155/KC701/	0.00	0.00	0.00	1440	450	1038	423	0.000	0.000	8.68267	13.02400	4.34133
FW-02.4-02T	15	30.000	1	1.260	1.260	0.000	18.000	0.944	0.00	90	0.00	A155/KC701/	0.00	0.00	0.00	1440	450	1038	423	0.000	0.000	13.02400	13.02400	0.00000
FW-02.4-03P	65	30.000	1	1.260	1.260	0.000	0.000	0.000	0.00	90	156.00	A155/KC701/	0.00	0.00	0.00	1440	450	1038	423	0.000	0.000	13.02400	0.00000	0.00000
FW-02.4-04E	2	30.000	1	1.260	1.260	0.000	0.000	0.000	1.50	90	0.00	A234/WPCWPC/	0.00	0.00	0.00	1440	450	1038	423	0.000	0.000	13.02400	0.00000	0.00000
FW-02.4-05E	4	30.000	1	1.260	1.260	0.000	0.000	0.000	1.00	90	0.00	A234/WPCWPC/	0.00	0.00	0.00	1440	450	1038	423	0.000	0.000	13.02400	0.00000	0.00000
FW-02.4-06P	54	30.000	1	1.260	1.260	0.000	0.000	0.000	0.00	90	282.00	A155/KC701/	0.00	0.00	0.00	1440	450	1038	423	0.000	0.000	13.02400	0.00000	0.00000
FW-02.4-07E	2	30.000	1	1.260	1.260	0.000	0.000	0.000	1.50	90	0.00	A234/WPCWPC/	0.00	0.00	0.00	1440	450	1038	423	0.000	0.000	13.02400	0.00000	0.00000
FW-02.4-08P	52	30.000	1	1.260	1.260	0.000	0.000	0.000	0.00	90	312.00	A155/KC701/	0.00	0.00	0.00	1440	450	1038	423	0.000	0.000	13.02400	0.00000	0.00000
FW-02.4-09E	2	30.000	1	1.260	1.260	0.000	0.000	0.000	1.50	90	0.00	A234/WPCWPC/	0.00	0.00	0.00	1440	450	1038	423	0.000	0.000	13.02400	0.00000	0.00000
FW-02.4-10P	52	30.000	1	1.260	1.260	0.000	0.000	0.000	0.00	90	174.00	A155/KC701/	0.00	0.00	0.00	1440	450	1038	423	0.000	0.000	13.02400	0.00000	0.00000
FW-02.4-11E	2	30.000	1	1.260	1.260	0.000	0.000	0.000	1.50	90	0.00	A234/WPCWPC/	0.00	0.00	0.00	1440	450	1038	423	0.000	0.000	13.02400	0.00000	0.00000
FW-02.4-12P_1	52	30.000	1	1.260	1.260	0.000	0.000	0.000	0.00	90	450.00	A155/KC701/	0.00	0.00	0.00	1440	450	1038	423	0.000	0.000	13.02400	0.00000	0.00000
FW-02.4-12P_2	9	30.000	1	1.260	1.260	0.000	0.000	0.000	0.00	90	156.00	A155/KC701/	0.00	0.00	0.00	1440	450	1038	423	0.000	0.000	13.02400	0.00000	0.00000
FW-02.4-13E	2	30.000	1	1.260	1.260	0.000	0.000	0.000	1.50	90	0.00	A234/WPCWPC/	0.00	0.00	0.00	1440	450	1038	423	0.000	0.000	13.02400	0.00000	0.00000
FW-02.4-14P	52	30.000	1	1.260	1.260	0.000	0.000	0.000	0.00	0	69.00	A155/KC701/	0.00	0.00	0.00	1440	450	1038	423	0.000	0.000	13.02400	0.00000	0.00000
FW-02.4-15E	2	30.000	1	1.260	1.260	0.000	0.000	0.000	1.50	90	0.00	A234/WPCWPC/	0.00	0.00	0.00	1440	450	1038	423	0.000	0.000	13.02400	0.00000	0.00000
FW-02.4-16P	52	30.000	1	1.260	1.260	0.000	0.000	0.000	0.00	90	447.00	A155/KC701/	0.00	0.00	0.00	1440	450	1038	423	0.000	0.000	13.02400	0.00000	0.00000
FW-02.4-17E	2	30.000	1	1.260	1.260	0.000	0.000	0.000	1.50	90	0.00	A234/WPCWPC/	0.00	0.00	0.00	1440	450	1038	423	0.000	0.000	13.02400	0.00000	0.00000
FW-02.4-18P	52	30.000	1	1.260	1.365	0.000	0.000	0.000	0.00	90	90.00	A155/KC701/	0.00	0.00	0.00	1440	450	1038	423	0.000	0.000	13.02400	0.00000	0.00000
FW-02.4-19T	14	30.000	1	1.260	1.368	0.000	18.000	0.944	0.00	90	0.00	A155/KC701/	0.00	0.00	0.00	1440	450	1038	423	0.000	0.000	13.02400	9.76800	3.25600
Line Name : FW-02.5 SG INLET HEADER																								
FW-02.5-01T	15	30.000	1	1.260	1.372	0.000	6.625	0.432	0.00	90	0.00	A155/KC701/	0.00	0.00	0.00	1440	450	1038	423	0.000	0.000	9.76800	9.76800	0.00000
FW-02.5-02P	65	30.000	1	1.260	1.260	0.000	0.000	0.000	0.00	90	12.00	A155/KC701/	0.00	0.00	0.00	1440	450	1038	423	0.000	0.000	9.76800	0.00000	0.00000
FW-02.5-03T	15	30.000	1	1.260	1.260	0.000	6.625	0.432	0.00	90	0.00	A155/KC701/	0.00	0.00	0.00	1440	450	1038	423	0.000	0.000	9.76800	9.76800	0.00000
FW-02.5-06P	65	30.000	1	1.260	1.365	0.000	0.000	0.000	0.00	90	2.00	A155/KC701/	0.00	0.00	0.00	1440	450	1038	423	0.000	0.000	9.76800	0.00000	0.00000
FW-02.5-04T	14	30.000	1	1.260	1.368	0.000	18.000	0.944	0.00	90	0.00	A155/KC701/	0.00	0.00	0.00	1440	450	1038	423	0.000	0.000	9.76800	6.51200	3.25600
Line Name : FW-02.6 SG INLET HEADER																								
FW-02.6-01P	63	30.000	1	1.260	1.361	0.000	0.000	0.000	0.00	90	18.00	A155/KC701/	0.00	0.00	0.00	1440	450	1038	423	0.000	0.000	6.51200	0.00000	0.00000
FW-02.6-03T	14	30.000	1	1.260	1.361	0.000	18.000	0.944	0.00	90	0.00	A155/KC701/	0.00	0.00	0.00	1440	450	1038	423	0.000	0.000	6.51200	3.25600	3.25600
Line Name : FW-02.8A SG HDR to SG 31																								
FW-02.8A-01P	64	18.000	80	0.938	0.968	0.000	0.000	0.000	0.00	180	204.00	A106/CC/	0.00	0.00	0.00	1440	450	1038	423	0.000	0.000	3.25600	0.00000	0.00000
FW-02.8A-02E	2	18.000	0	0.938	0.938	0.000	0.000	0.000	1.50	90	0.00	A234/WPCWPC/	0.00	0.00	0.00	1440	450	1038	423	0.000	0.000	3.25600	0.00000	0.00000
FW-02.8A-03T	15	18.000	0	0.938	0.938	0.000	6.625	0.432	0.00	90	0.00	A106/CC/	0.00	0.00	0.00	1440	450	1038	423	0.000	0.000	3.25600	3.25600	0.00000
FW-02.8A-04V	22	18.000	0	0.938	0.938	0.000	0.000	0.000	0.00	90	0.00	A216/WCBWCB/	0.00	0.00	0.00	1440	450	1038	423	0.000	0.000	3.25600	0.00000	0.00000
FW-02.8A-25R	7	18.000	80	0.938	0.000	0.000	12.750	0.844	0.00	90	0.00	A234/WPBWPB/	0.00	0.00	0.00	1440	450	1038	423	0.000	0.000	3.25600	3.25600	0.00000
FW-02.8A-05V	24	12.750	100	0.844	1.312	0.000	0.000	0.000	0.00	90	0.00	A216/WCBWCB/	0.00	0.00	0.00	1440	450	1038	423	0.000	0.000	3.25600	0.00000	0.00000
FW-02.8A-26R	18	18.000	80	0.938	1.312	0.000	12.750	0.844	0.00	90	0.00	A234/WPBWPB/	0.00	0.00	0.00	1440	450	1038	423	0.000	0.000	3.25600	3.25600	0.00000
FW-02.8A-06E	4	18.000	0	0.938	0.938	0.000	0.000	0.000	1.50	90	0.00	A234/WPCWPC/	0.00	0.00	0.00	1440	450	1038	423	0.000	0.000	3.25600	0.00000	0.00000
FW-02.8A-07P	54	18.000	0	0.938	0.938	0.000	0.000	0.000	0.00	0	66.00	A106/CC/	0.00	0.00	0.00	1440	450	1038	423	0.000	0.000	3.25600	0.00000	0.00000
FW-02.8A-08T	15	18.000	0	0.938	0.938	0.000	6.625	0.432	0.00	90	0.00	A106/CC/	0.00	0.00	0.00	1440	450	1038	423	0.000	0.000	3.25600	3.25600	0.00000
FW-02.8A-09P	65	18.000	0	0.938	0.938	0.000	0.000	0.000	0.00	0	12.00	A106/CC/	0.00	0.00	0.00	1440	450	1038	423	0.000	0.000	3.25600	0.00000	0.00000
FW-02.8A-10E	4	18.000	0	0.938	0.938	0.000	0.000	0.000	1.50	90	0.00	A234/WPCWPC/	0.00	0.00	0.00	1440	450	1038	423	0.000	0.000	3.25600	0.00000	0.00000
FW-02.8A-11P_1	54	18.000	0	0.938	0.938	0.000	0.000	0.000	0.00	90	270.00	A106/CC/	0.00	0.00	0.00	1440	450	1038	423	0.000	0.000	3.25600	0.00000	0.00000
FW-02.8A-11P_2	9	18.000	0	0.938	0.938	0.000	0.000	0.000	0.00	90	126.00	A106/CC/	0.00	0.00	0.00	1440	450	1038	423	0.000	0.000	3.25600	0.00000	0.00000
FW-02.8A-12F	6	18.000	0	0.938	0.938	0.000	0.000	0.000	0.00	90	0.00	A106/CC/	0.00	0.00	0.00	1440	450	1038	423	0.000	0.000	3.25600	0.00000	0.00000
FW-02.8A-13P	56	18.000	0	0.938	0.938	0.000	0.000	0.000	0.00	90	114.00	A106/CC/	0.00	0.00	0.00	1440	450	1038	423	0.000	0.000	3.25600	0.00000	0.00000
FW-02.8A-14E	1	18.000	0	0.938	0.938	0.000	0.000	0.000	1.50	90	0.00	A234/WPCWPC/	0.00	0.00	0.00	1440	450	1038	423	0.000	0.000	3.25600	0.00000	0.00000
FW-02.8A-15P	51	18.000	0	0.938	0.938	0.000	0.000	0.000	0.00	90	84.00	A106/CC/	0.00	0.00	0.00	1440	450	1038	423	0.000	0.000	3.25600	0.00000	0.00000
FW-02.8A-16E	2	18.000	0	0.938	0.938	0.000	0.000	0.000	1.50	90	0.00	A234/WPCWPC/	0.00	0.00	0.00	1440	450	1038	423	0.000	0.000	3.25600	0.00000	0.00000
FW-02.8A-17P	52	18.000	0	0.938	0.938	0.000	0.000	0.000	0.00	0	93.00	A106/CC/	0.00	0.00	0.00	1440	450	1038	423	0.000	0.000	3.25600	0.00000	0.00000
FW-02.8A-18V	25	18.000	0	0.938	0.938	0.000	0.000	0.000	0.00	0	0.00	A105/A105A10/	0.00	0.00	0.00	1440	450	1038	423	0.000	0.000	3.25600	0.00000	0.00000
FW-02.8A-19V	22	18.000	0	0.938	0.938	0.000	0.000	0.000	0.00	0	0.00	A105/A105A10/	0.00	0.00	0.00	1440	450	1038	423	0.000	0.000	3.25600	0.00000	0.00000
FW-02.8A-20P	58	18.000	0	0.750	0.750	0.000	0.000	0.000	0.00	0	12.00	A106/CC/	0.00	0.00	0.00	1085	450	1038	423	0.000	0.000	3.25600	0.00000	0.00000
FW-02.8A-21T	15	18.000	0	0.750	0.750	0.000	4.500	0.337	0.00	90	0.00	A106/CC/	0.00	0.00	0.00	1085	450	1038	423	0.000	0.000	3.25600	3.25600	0.00000

Component Name	Geom Code	Pipe Size OD (in)	Sch.	Tnom (in)	Tinit (in)	Tcrit (in)	Br/Small End OD (in)	Br/Small Tnom (in)	R / D Ratio	Orient Angle (Deg.)	Pipe Length (in)	Spec/Type/ Class	Material Cr. (%)	Cu. (%)	Mo. (%)	Design Press. (psig)	Design Temp. (Deg. F)	Op. Press. (psig)	Op. Temp. (Deg. F)	Op. Enth. (Btu/lbm)	Op. Qual.	Flow Rate U/S Mn. (Mlbm/hr)	D/S Mn. (Mlbm/hr)	Br.
FW-02.8A-22E	4	18.000	0	0.750	0.750	0.000	0.000	0.000	1.50	90	0.00	A234/WPCWPC/	0.00	0.00	0.00	1085	450	1038	423	0.000	0.000	3.25600	0.00000	0.00000
FW-02.8A-23E	4	18.000	0	0.750	0.750	0.000	0.000	0.000	1.50	90	0.00	A234/WPCWPC/	0.00	0.00	0.00	1085	450	1038	423	0.000	0.000	3.25600	0.00000	0.00000
FW-02.8A-24P	54	18.000	0	0.750	0.750	0.000	0.000	0.000	0.00	90	5.00	A106/CC/	0.00	0.00	0.00	1085	450	1038	423	0.000	0.000	3.25600	0.00000	0.00000
FW-03.1A-01P	52	18.000	0	0.750	0.750	0.000	0.000	0.000	0.00	90	11.00	A106/CC/	0.00	0.00	0.00	1085	450	1038	423	0.000	0.000	3.25600	0.00000	0.00000
FW-03.1A-02E	2	18.000	0	0.750	0.750	0.000	0.000	0.000	1.50	90	0.00	A234/WPCWPC/	0.00	0.00	0.00	1085	450	1038	423	0.000	0.000	3.25600	0.00000	0.00000
FW-03.1A-03P	52	18.000	0	0.750	0.750	0.000	0.000	0.000	0.00	90	45.00	A106/CC/	0.00	0.00	0.00	1085	450	1038	423	0.000	0.000	3.25600	0.00000	0.00000
FW-03.1A-04B	1	18.000	0	0.750	0.750	0.000	0.000	0.000	43.00	90	0.00	A106/CC/	0.00	0.00	0.00	1085	450	1038	423	0.000	0.000	3.25600	0.00000	0.00000
FW-03.1A-05B	3	18.000	0	0.750	0.750	0.000	0.000	0.000	5.00	90	0.00	A106/CC/	0.00	0.00	0.00	1085	450	1038	423	0.000	0.000	3.25600	0.00000	0.00000
FW-03.1A-06P_1	53	18.000	0	0.750	0.750	0.000	0.000	0.000	0.00	26	270.00	A106/CC/	0.00	0.00	0.00	1085	450	1038	423	0.000	0.000	3.25600	0.00000	0.00000
FW-03.1A-06P_2	9	18.000	0	0.750	0.750	0.000	0.000	0.000	0.00	26	45.00	A106/CC/	0.00	0.00	0.00	1085	450	1038	423	0.000	0.000	3.25600	0.00000	0.00000
FW-03.1A-07B	1	18.000	0	0.750	0.750	0.000	0.000	0.000	5.00	90	0.00	A106/CC/	0.00	0.00	0.00	1085	450	1038	423	0.000	0.000	3.25600	0.00000	0.00000
FW-03.1A-08B	4	18.000	0	0.750	0.750	0.000	0.000	0.000	5.00	90	0.00	A106/CC/	0.00	0.00	0.00	1085	450	1038	423	0.000	0.000	3.25600	0.00000	0.00000
FW-03.1A-09N	30	18.000	0	0.750	0.750	0.000	0.000	0.000	0.00	90	0.00	SA508/3/	0.50	0.00	0.50	1085	450	1038	423	0.000	0.000	3.25600	0.00000	0.00000
Line Name : FW-02.8B SG HDR to SG 32																								
FW-02.8B-01P	64	18.000	0	0.938	0.938	0.000	0.000	0.000	0.00	180	204.00	A106/CC/	0.00	0.00	0.00	1440	450	1038	423	0.000	0.000	3.25600	0.00000	0.00000
FW-02.8B-02E	2	18.000	0	0.938	0.938	0.000	0.000	0.000	1.50	90	0.00	A234/WPCWPC/	0.00	0.00	0.00	1440	450	1038	423	0.000	0.000	3.25600	0.00000	0.00000
FW-02.8B-03P	52	18.000	0	0.938	0.938	0.000	0.000	0.000	0.00	90	48.00	A106/CC/	0.00	0.00	0.00	1440	450	1038	423	0.000	0.000	3.25600	0.00000	0.00000
FW-02.8B-04T	15	18.000	0	0.938	0.938	0.000	6.625	0.432	0.00	90	0.00	A106/CC/	0.00	0.00	0.00	1440	450	1038	423	0.000	0.000	3.25600	3.25600	0.00000
FW-02.8B-05V	22	18.000	0	0.938	0.938	0.000	0.000	0.000	0.00	90	0.00	A216/WCBWCB/	0.00	0.00	0.00	1440	450	1038	423	0.000	0.000	3.25600	0.00000	0.00000
FW-02.8B-25R	7	18.000	80	0.938	0.000	0.000	12.750	0.844	0.00	90	0.00	A234/WPBWPB/	0.00	0.00	0.00	1440	450	1038	423	0.000	0.000	3.25600	3.25600	0.00000
FW-02.8B-06V	24	12.750	100	0.844	1.312	0.000	0.000	0.000	0.00	90	0.00	A216/WCBWCB/	0.00	0.00	0.00	1440	450	1038	423	0.000	0.000	3.25600	0.00000	0.00000
FW-02.8B-26R	18	18.000	80	0.938	0.000	0.000	12.750	0.844	0.00	90	0.00	A234/WPBWPB/	0.00	0.00	0.00	1440	450	1038	423	0.000	0.000	3.25600	3.25600	0.00000
FW-02.8B-07E	4	18.000	0	0.938	0.938	0.000	0.000	0.000	1.50	90	0.00	A234/WPCWPC/	0.00	0.00	0.00	1440	450	1038	423	0.000	0.000	3.25600	0.00000	0.00000
FW-02.8B-08P	54	18.000	0	0.938	0.938	0.000	0.000	0.000	0.00	0	66.00	A106/CC/	0.00	0.00	0.00	1440	450	1038	423	0.000	0.000	3.25600	0.00000	0.00000
FW-02.8B-09T	15	18.000	0	0.938	0.938	0.000	6.625	0.432	0.00	90	0.00	A106/CC/	0.00	0.00	0.00	1440	450	1038	423	0.000	0.000	3.25600	3.25600	0.00000
FW-02.8B-10P	65	18.000	0	0.938	0.938	0.000	0.000	0.000	0.00	0	12.00	A106/CC/	0.00	0.00	0.00	1440	450	1038	423	0.000	0.000	3.25600	0.00000	0.00000
FW-02.8B-11E	4	18.000	0	0.938	0.938	0.000	0.000	0.000	1.50	90	0.00	A234/WPCWPC/	0.00	0.00	0.00	1440	450	1038	423	0.000	0.000	3.25600	0.00000	0.00000
FW-02.8B-12P_1	54	18.000	80	0.938	0.998	0.000	0.000	0.000	0.00	90	270.00	A106/CC/	0.00	0.00	0.00	1440	450	1038	423	0.000	0.000	3.25600	0.00000	0.00000
FW-02.8B-12P_2	9	18.000	0	0.938	0.938	0.000	0.000	0.000	0.00	90	102.00	A106/CC/	0.00	0.00	0.00	1440	450	1038	423	0.000	0.000	3.25600	0.00000	0.00000
FW-02.8B-13F	6	18.000	0	0.938	0.938	0.000	0.000	0.000	0.00	90	0.00	A106/CC/	0.00	0.00	0.00	1440	450	1038	423	0.000	0.000	3.25600	0.00000	0.00000
FW-02.8B-14P	56	18.000	80	0.938	0.990	0.000	0.000	0.000	0.00	90	114.00	A106/CC/	0.00	0.00	0.00	1440	450	1038	423	0.000	0.000	3.25600	0.00000	0.00000
FW-02.8B-15E	1	18.000	0	0.938	0.938	0.000	0.000	0.000	1.50	90	0.00	A234/WPCWPC/	0.00	0.00	0.00	1440	450	1038	423	0.000	0.000	3.25600	0.00000	0.00000
FW-02.8B-16P	51	18.000	0	0.938	0.938	0.000	0.000	0.000	0.00	90	42.00	A106/CC/	0.00	0.00	0.00	1440	450	1038	423	0.000	0.000	3.25600	0.00000	0.00000
FW-02.8B-17E	2	18.000	0	0.938	0.938	0.000	0.000	0.000	1.50	90	0.00	A234/WPCWPC/	0.00	0.00	0.00	1440	450	1038	423	0.000	0.000	3.25600	0.00000	0.00000
FW-02.8B-18P	52	18.000	0	0.938	0.938	0.000	0.000	0.000	0.00	0	93.00	A106/CC/	0.00	0.00	0.00	1440	450	1038	423	0.000	0.000	3.25600	0.00000	0.00000
FW-02.8B-19V	25	18.000	0	0.938	0.938	0.000	0.000	0.000	0.00	0	0.00	A105/A105A10/	0.00	0.00	0.00	1440	450	1038	423	0.000	0.000	3.25600	0.00000	0.00000
FW-02.8B-20V	22	18.000	0	0.938	0.938	0.000	0.000	0.000	0.00	0	0.00	A105/A105A10/	0.00	0.00	0.00	1440	450	1038	423	0.000	0.000	3.25600	0.00000	0.00000
FW-02.8B-21P	58	18.000	0	0.750	0.750	0.000	0.000	0.000	0.00	0	12.00	A106/CC/	0.00	0.00	0.00	1085	450	1038	423	0.000	0.000	3.25600	0.00000	0.00000
FW-02.8B-22T	15	18.000	60	0.750	0.000	0.000	4.500	0.337	0.00	90	0.00	A106/CC/	0.00	0.00	0.00	1085	450	1038	423	0.000	0.000	3.25600	3.25600	0.00000
FW-02.8B-23E	4	18.000	60	0.750	0.924	0.000	0.000	0.000	1.50	90	0.00	A234/WPCWPC/	0.00	0.00	0.00	1085	450	1038	423	0.000	0.000	3.25600	0.00000	0.00000
FW-02.8B-24P	54	18.000	0	0.750	0.750	0.000	0.000	0.000	0.00	90	5.00	A106/CC/	0.00	0.00	0.00	1085	450	1038	423	0.000	0.000	3.25600	0.00000	0.00000
FW-03.1B-01P	52	18.000	0	0.750	0.750	0.000	0.000	0.000	0.00	90	52.00	A106/CC/	0.00	0.00	0.00	1085	450	1038	423	0.000	0.000	3.25600	0.00000	0.00000
FW-03.1B-02E	2	18.000	0	0.750	0.750	0.000	0.000	0.000	1.50	90	0.00	A234/WPCWPC/	0.00	0.00	0.00	1085	450	1038	423	0.000	0.000	3.25600	0.00000	0.00000
FW-03.1B-03P	52	18.000	0	0.750	0.750	0.000	0.000	0.000	0.00	90	108.00	A106/CC/	0.00	0.00	0.00	1085	450	1038	423	0.000	0.000	3.25600	0.00000	0.00000
FW-03.1B-04B	1	18.000	0	0.750	0.750	0.000	0.000	0.000	41.00	90	0.00	A106/CC/	0.00	0.00	0.00	1085	450	1038	423	0.000	0.000	3.25600	0.00000	0.00000
FW-03.1B-05B	3	18.000	0	0.750	0.750	0.000	0.000	0.000	5.00	90	0.00	A106/CC/	0.00	0.00	0.00	1085	450	1038	423	0.000	0.000	3.25600	0.00000	0.00000
FW-03.1B-06P	53	18.000	0	0.750	0.750	0.000	0.000	0.000	0.00	21	319.00	A106/CC/	0.00	0.00	0.00	1085	450	1038	423	0.000	0.000	3.25600	0.00000	0.00000
FW-03.1B-07B	1	18.000	0	0.750	0.750	0.000	0.000	0.000	5.00	90	0.00	A106/CC/	0.00	0.00	0.00	1085	450	1038	423	0.000	0.000	3.25600	0.00000	0.00000
FW-03.1B-08E	2	18.000	0	0.750	0.750	0.000	0.000	0.000	1.50	90	0.00	A234/WPCWPC/	0.00	0.00	0.00	1085	450	1038	423	0.000	0.000	3.25600	0.00000	0.00000
FW-03.1B-09P	53	18.000	0	0.750	0.750	0.000	0.000	0.000	0.00	90	134.00	A106/CC/	0.00	0.00	0.00	1085	450	1038	423	0.000	0.000	3.25600	0.00000	0.00000
FW-03.1B-10E	1	18.000	0	0.750	0.750	0.000	0.000	0.000	1.50	90	0.00	A234/WPCWPC/	0.00	0.00	0.00	1085	450	1038	423	0.000	0.000	3.25600	0.00000	0.00000
FW-03.1B-11E	3	18.000	0	0.750	0.750	0.000	0.000	0.000	1.50	90	0.00	A234/WPCWPC/	0.00	0.00	0.00	1085	450	1038	423	0.000	0.000	3.25600	0.00000	0.00000
FW-03.1B-12N	30	18.000	0	0.750	0.750	0.000	0.000	0.000	0.00	90	0.00	SA508/3/	0.50	0.00	0.50	1085	450	1038	423	0.000	0.000	3.25600	0.00000	0.00000
Line Name : FW-02.8C SG HDR to SG 34																								
FW-02.8C-01P	64	18.000	80	0.938	0.946	0.000	0.000	0.000	0.00	180	204.00	A106/CC/	0.00	0.00	0.00	1440	450	1038	423	0.000	0.000	3.25600	0.00000	0.00000
FW-02.8C-02E	2	18.000	0	0.938	0.938	0.000	0.000	0.000	1.50	90	0.00	A234/WPCWPC/	0.00	0.00	0.00	1440	450	1038	423	0.000	0.000	3.25600	0.00000	0.00000
FW-02.8C-03P	52	18.000	0	0.938	0.938	0.000	0.000	0.000	0.00	90	72.00	A106/CC/	0.00	0.00	0.00	1440	450	1038	423	0.000	0.000	3.25600	0.00000	0.00000
FW-02.8C-04T	15	18.000	0	0.938	0.938	0.000	6.625	0.432	0.00	90	0.00	A106/CC/	0.00	0.00	0.00	1440	450	1038	423	0.000	0.000	3.25600	3.25600	0.00000
FW-02.8C-05V	22	18.000	0	0.938	0.938	0.000	0.000	0.000	0.00	90	0.00	A216/WCBWCB/	0.00	0.00	0.00	1440	450	1038	423	0.000	0.000	3.25600	0.00000	0.00000
FW-02.8C-24R	7	18.000	80	0.938	0.000	0.000	12.750	0.844	0.00	90	0.00	A234/WPBWPB/	0.00	0.00	0.00	1440	450	1038	423	0.000	0.000	3.25600	3.25600	0.00000

Component Name	Geom Code	Pipe Size OD (in)	Sch.	Tnom (in)	Tinit (in)	Tcrit (in)	Br/Small End OD (in)	Br/Small Tnom (in)	R / D Ratio	Orient Angle (Deg.)	Pipe Length (in)	Spec/Type/ Class	Material Cr. (%)	Cu. (%)	Mo. (%)	Design Press. (psig)	Design Temp. (Deg. F)	Op. Press. (psig)	Op. Temp. (Deg. F)	Op. Enth. (Btu/lbm)	Op. Qual.	Flow Rate U/S Mn. (Mlbm/hr)	D/S Mn. (Mlbm/hr)	Br.
FW-02.8C-06V	24	12.750	100	0.844	1.312	0.000	0.000	0.000	0.00	90	0.00	A216/WCBWCB/	0.00	0.00	0.00	1440	450	1038	423	0.000	0.000	3.25600	0.00000	0.00000
FW-02.8C-25R	18	18.000	80	0.938	0.000	0.000	12.750	0.844	0.00	90	0.00	A234/WPBWPB/	0.00	0.00	0.00	1440	450	1038	423	0.000	0.000	3.25600	3.25600	0.00000
FW-02.8C-07E	4	18.000	0	0.938	0.938	0.000	0.000	0.000	1.50	90	0.00	A234/WPCWPC/	0.00	0.00	0.00	1440	450	1038	423	0.000	0.000	3.25600	0.00000	0.00000
FW-02.8C-08P	54	18.000	0	0.938	0.938	0.000	0.000	0.000	0.00	0	66.00	A106/CC/	0.00	0.00	0.00	1440	450	1038	423	0.000	0.000	3.25600	0.00000	0.00000
FW-02.8C-09T	15	18.000	0	0.938	0.938	0.000	6.625	0.432	0.00	90	0.00	A106/CC/	0.00	0.00	0.00	1440	450	1038	423	0.000	0.000	3.25600	3.25600	0.00000
FW-02.8C-10P	65	18.000	0	0.938	0.938	0.000	0.000	0.000	0.00	0	12.00	A106/CC/	0.00	0.00	0.00	1440	450	1038	423	0.000	0.000	3.25600	0.00000	0.00000
FW-02.8C-11E	4	18.000	0	0.938	0.938	0.000	0.000	0.000	1.50	90	0.00	A234/WPCWPC/	0.00	0.00	0.00	1440	450	1038	423	0.000	0.000	3.25600	0.00000	0.00000
FW-02.8C-12P_1	54	18.000	0	0.938	0.938	0.000	0.000	0.000	0.00	90	270.00	A106/CC/	0.00	0.00	0.00	1440	450	1038	423	0.000	0.000	3.25600	0.00000	0.00000
FW-02.8C-12P_2	9	18.000	0	0.938	0.938	0.000	0.000	0.000	0.00	90	111.00	A106/CC/	0.00	0.00	0.00	1440	450	1038	423	0.000	0.000	3.25600	0.00000	0.00000
FW-02.8C-13F	6	18.000	0	0.938	0.938	0.000	0.000	0.000	0.00	90	0.00	A106/CC/	0.00	0.00	0.00	1440	450	1038	423	0.000	0.000	3.25600	0.00000	0.00000
FW-02.8C-14P	56	18.000	0	0.938	0.938	0.000	0.000	0.000	0.00	90	114.00	A106/CC/	0.00	0.00	0.00	1440	450	1038	423	0.000	0.000	3.25600	0.00000	0.00000
FW-02.8C-15E	1	18.000	0	0.938	0.938	0.000	0.000	0.000	1.50	90	0.00	A234/WPCWPC/	0.00	0.00	0.00	1440	450	1038	423	0.000	0.000	3.25600	0.00000	0.00000
FW-02.8C-16E	4	18.000	0	0.938	0.938	0.000	0.000	0.000	1.50	90	0.00	A234/WPCWPC/	0.00	0.00	0.00	1440	450	1038	423	0.000	0.000	3.25600	0.00000	0.00000
FW-02.8C-17P	52	18.000	0	0.938	0.938	0.000	0.000	0.000	0.00	0	93.00	A106/CC/	0.00	0.00	0.00	1440	450	1038	423	0.000	0.000	3.25600	0.00000	0.00000
FW-02.8C-18V	25	18.000	0	0.938	0.938	0.000	0.000	0.000	0.00	0	0.00	A105/A105A10/	0.00	0.00	0.00	1440	450	1038	423	0.000	0.000	3.25600	0.00000	0.00000
FW-02.8C-19V	22	18.000	0	0.938	0.938	0.000	0.000	0.000	0.00	0	0.00	A105/A105A10/	0.00	0.00	0.00	1440	450	1038	423	0.000	0.000	3.25600	0.00000	0.00000
FW-02.8C-20P	58	18.000	0	0.750	0.750	0.000	0.000	0.000	0.00	0	12.00	A106/CC/	0.00	0.00	0.00	1085	450	1038	423	0.000	0.000	3.25600	0.00000	0.00000
FW-02.8C-21T	15	18.000	0	0.750	0.750	0.000	4.500	0.337	0.00	90	0.00	A106/CC/	0.00	0.00	0.00	1085	450	1038	423	0.000	0.000	3.25600	3.25600	0.00000
FW-02.8C-22E	4	18.000	0	0.750	0.750	0.000	0.000	0.000	1.50	90	0.00	A234/WPCWPC/	0.00	0.00	0.00	1085	450	1038	423	0.000	0.000	3.25600	0.00000	0.00000
FW-02.8C-23P	54	18.000	0	0.750	0.750	0.000	0.000	0.000	0.00	90	5.00	A106/CC/	0.00	0.00	0.00	1085	450	1038	423	0.000	0.000	3.25600	0.00000	0.00000
FW-03.1C-01P	52	18.000	0	0.750	0.750	0.000	0.000	0.000	0.00	90	0.00	A106/CC/	0.00	0.00	0.00	1085	450	1038	423	0.000	0.000	3.25600	0.00000	0.00000
FW-03.1C-02E	2	18.000	0	0.750	0.750	0.000	0.000	0.000	1.50	90	0.00	A234/WPCWPC/	0.00	0.00	0.00	1085	450	1038	423	0.000	0.000	3.25600	0.00000	0.00000
FW-03.1C-03P	52	18.000	0	0.750	0.750	0.000	0.000	0.000	0.00	90	256.00	A106/CC/	0.00	0.00	0.00	1085	450	1038	423	0.000	0.000	3.25600	0.00000	0.00000
FW-03.1C-04B	1	18.000	0	0.750	0.750	0.000	0.000	0.000	40.20	90	0.00	A106/CC/	0.00	0.00	0.00	1085	450	1038	423	0.000	0.000	3.25600	0.00000	0.00000
FW-03.1C-16P_1	51	18.000	0	0.750	0.750	0.000	0.000	0.000	0.00	90	270.00	A106/CC/	0.00	0.00	0.00	1085	450	1038	423	0.000	0.000	3.25600	0.00000	0.00000
FW-03.1C-16P_2	9	18.000	0	0.750	0.750	0.000	0.000	0.000	0.00	90	23.00	A106/CC/	0.00	0.00	0.00	1085	450	1038	423	0.000	0.000	3.25600	0.00000	0.00000
FW-03.1C-05B	2	18.000	0	0.750	0.750	0.000	0.000	0.000	5.00	90	0.00	A106/CC/	0.00	0.00	0.00	1085	450	1038	423	0.000	0.000	3.25600	0.00000	0.00000
FW-03.1C-06P_1	52	18.000	0	0.750	0.750	0.000	0.000	0.000	0.00	15	270.00	A106/CC/	0.00	0.00	0.00	1085	450	1038	423	0.000	0.000	3.25600	0.00000	0.00000
FW-03.1C-06P_2	9	18.000	0	0.750	0.750	0.000	0.000	0.000	0.00	15	102.00	A106/CC/	0.00	0.00	0.00	1085	450	1038	423	0.000	0.000	3.25600	0.00000	0.00000
FW-03.1C-07B	1	18.000	0	0.750	0.750	0.000	0.000	0.000	5.00	90	0.00	A106/CC/	0.00	0.00	0.00	1085	450	1038	423	0.000	0.000	3.25600	0.00000	0.00000
FW-03.1C-09P	51	18.000	0	0.750	0.750	0.000	0.000	0.000	0.00	45	5.00	A106/CC/	0.00	0.00	0.00	1085	450	1038	423	0.000	0.000	3.25600	0.00000	0.00000
FW-03.1C-10E	4	18.000	0	0.750	0.750	0.000	0.000	0.000	1.50	90	0.00	A234/WPCWPC/	0.00	0.00	0.00	1085	450	1038	423	0.000	0.000	3.25600	0.00000	0.00000
FW-03.1C-11P	54	18.000	0	0.750	0.750	0.000	0.000	0.000	0.00	90	33.00	A106/CC/	0.00	0.00	0.00	1085	450	1038	423	0.000	0.000	3.25600	0.00000	0.00000
FW-03.1C-12E	1	18.000	0	0.750	0.750	0.000	0.000	0.000	1.50	90	0.00	A234/WPCWPC/	0.00	0.00	0.00	1085	450	1038	423	0.000	0.000	3.25600	0.00000	0.00000
FW-03.1C-13P	51	18.000	0	0.750	0.750	0.000	0.000	0.000	0.00	35	20.00	A106/CC/	0.00	0.00	0.00	1085	450	1038	423	0.000	0.000	3.25600	0.00000	0.00000
FW-03.1C-14E	1	18.000	0	0.750	0.750	0.000	0.000	0.000	1.50	90	0.00	A234/WPCWPC/	0.00	0.00	0.00	1085	450	1038	423	0.000	0.000	3.25600	0.00000	0.00000
FW-03.1C-15N	30	18.000	0	0.750	0.750	0.000	0.000	0.000	0.00	90	0.00	SA508/3/	0.50	0.00	0.50	1085	450	1038	423	0.000	0.000	3.25600	0.00000	0.00000
Line Name : FW-02.8D SG HDR to SG 33																								
FW-02.6-02T	15	30.000	1	1.260	1.260	0.000	6.625	0.432	0.00	90	0.00	A155/KC701/	0.00	0.00	0.00	1440	450	1038	423	0.000	0.000	6.51200	6.51200	0.00000
FW-02.7-01P	63	30.000	1	1.260	1.372	0.000	0.000	0.000	0.00	90	12.00	A155/KC701/	0.00	0.00	0.00	1440	450	1038	423	0.000	0.000	3.25600	0.00000	0.00000
FW-02.7-02T	15	30.000	1	1.260	1.260	0.000	6.625	0.432	0.00	90	0.00	A155/KC701/	0.00	0.00	0.00	1440	450	1038	423	0.000	0.000	3.25600	3.25600	0.00000
FW-02.7-03P	65	30.000	1	1.260	1.372	0.000	0.000	0.000	0.00	90	12.00	A155/KC701/	0.00	0.00	0.00	1440	450	1038	423	0.000	0.000	3.25600	0.00000	0.00000
FW-02.7-04T	14	30.000	1	1.260	1.395	0.000	18.000	0.944	0.00	90	0.00	A155/KC701/	0.00	0.00	0.00	1440	450	1038	423	0.000	0.000	3.25600	0.00000	3.25600
FW-02.8D-01P	64	18.000	80	0.938	0.964	0.000	0.000	0.000	0.00	180	204.00	A106/CC/	0.00	0.00	0.00	1440	450	1038	423	0.000	0.000	3.25600	0.00000	0.00000
FW-02.8D-02E	2	18.000	0	0.938	0.938	0.000	0.000	0.000	1.50	90	0.00	A234/WPCWPC/	0.00	0.00	0.00	1440	450	1038	423	0.000	0.000	3.25600	0.00000	0.00000
FW-02.8D-03P	52	18.000	0	0.938	0.938	0.000	0.000	0.000	0.00	90	108.00	A106/CC/	0.00	0.00	0.00	1440	450	1038	423	0.000	0.000	3.25600	0.00000	0.00000
FW-02.8D-04T	15	18.000	0	0.938	0.938	0.000	6.625	0.432	0.00	90	0.00	A106/CC/	0.00	0.00	0.00	1440	450	1038	423	0.000	0.000	3.25600	3.25600	0.00000
FW-02.8D-05V	22	18.000	0	0.938	0.938	0.000	0.000	0.000	0.00	90	0.00	A216/WCBWCB/	0.00	0.00	0.00	1440	450	1038	423	0.000	0.000	3.25600	0.00000	0.00000
FW-02.8D-24R	7	18.000	80	0.938	0.000	0.000	12.750	0.844	0.00	90	0.00	A234/WPBWPB/	0.00	0.00	0.00	1440	450	1038	423	0.000	0.000	3.25600	3.25600	0.00000
FW-02.8D-06V	24	12.750	100	0.844	1.312	0.000	0.000	0.000	0.00	90	0.00	A216/WCBWCB/	0.00	0.00	0.00	1440	450	1038	423	0.000	0.000	3.25600	0.00000	0.00000
FW-02.8D-25R	18	18.000	80	0.938	1.312	0.000	12.750	0.844	0.00	90	0.00	A234/WPBWPB/	0.00	0.00	0.00	1440	450	1038	423	0.000	0.000	3.25600	3.25600	0.00000
FW-02.8D-07E	4	18.000	0	0.938	0.938	0.000	0.000	0.000	1.50	90	0.00	A234/WPCWPC/	0.00	0.00	0.00	1440	450	1038	423	0.000	0.000	3.25600	0.00000	0.00000
FW-02.8D-08P	54	18.000	0	0.938	0.938	0.000	0.000	0.000	0.00	0	66.00	A106/CC/	0.00	0.00	0.00	1440	450	1038	423	0.000	0.000	3.25600	0.00000	0.00000
FW-02.8D-09T	15	18.000	0	0.938	0.938	0.000	6.625	0.432	0.00	90	0.00	A106/CC/	0.00	0.00	0.00	1440	450	1038	423	0.000	0.000	3.25600	3.25600	0.00000
FW-02.8D-10P	65	18.000	0	0.938	0.938	0.000	0.000	0.000	0.00	0	12.00	A106/CC/	0.00	0.00	0.00	1440	450	1038	423	0.000	0.000	3.25600	0.00000	0.00000
FW-02.8D-11E	4	18.000	0	0.938	0.938	0.000	0.000	0.000	1.50	90	0.00	A234/WPCWPC/	0.00	0.00	0.00	1440	450	1038	423	0.000	0.000	3.25600	0.00000	0.00000
FW-02.8D-12P_1	54	18.000	0	0.938	0.938	0.000	0.000	0.000	0.00	90	270.00	A106/CC/	0.00	0.00	0.00	1440	450	1038	423	0.000	0.000	3.25600	0.00000	0.00000
FW-02.8D-12P_2	9	18.000	0	0.938	0.938	0.000	0.000	0.000	0.00	90	162.00	A106/CC/	0.00	0.00	0.00	1440	450	1038	423	0.000	0.000	3.25600	0.00000	0.00000
FW-02.8D-13F	6	18.000	0	0.938	0.938	0.000	0.000	0.000	0.00	90	0.00	A106/CC/	0.00	0.00	0.00	1440	450	1038	423	0.000	0.000	3.25600	0.00000	0.00000
FW-02.8D-14P	56	18.000	0	0.938	0.938	0.000	0.000	0.000	0.00	90	27.00	A106/CC/	0.00	0.00	0.00	1440	450	1038	423	0.000	0.000	3.25600	0.00000	0.00000
FW-02.8D-15E	2	18.000	0	0.938	0.938	0.000	0.000	0.000	1.50	90	0.00	A234/WPCWPC/	0.00	0.00	0.00	1440	450	1038	423	0.000	0.000	3.25600	0.00000	0.00000
FW-02.8D-16P	52	18.000	0	0.938	0.938	0.000	0.000	0.000	0.00	0	93.00	A106/CC/	0.00	0.00	0.00	1440	450	1038	423	0.000	0.000	3.25600	0.00000	0.00000
FW-02.8D-17V	25	18.000	0	0.938	0.938	0.000	0.000	0.000	0.00	0	0.00	A105/A105A10/	0.00	0.00	0.00	1440	450	1038	423	0.000	0.000	3.25600	0.00000	0.00000
FW-02.8D-18V	22	18.000	0	0.938	0.938	0.000	0.000	0.000	0.00	0	0.00	A105/A105A10/	0.00	0.00	0.00	1440	450	1038	423	0.000	0.000	3.25600	0.00000	0.00000

Component Name	Geom Code	Pipe Size OD (in)	Sch.	Tnom (in)	Tinit (in)	Tcrit (in)	Br/Small End OD (in)	Br/Small Tnom (in)	R / D Ratio	Orient Angle (Deg.)	Pipe Length (in)	Spec/Type/ Class	Material Cr. (%)	Cu. (%)	Mo. (%)	Design Press. (psig)	Design Temp. (Deg. F)	Op. Press. (psig)	Op. Temp. (Deg. F)	Op. Enth. (Btu/lbm)	Op. Qual.	Flow Rate U/S Mn. (Mlbm/hr)	D/S Mn. (Mlbm/hr)	Br.
FW-02.8D-19P	58	18.000	0	0.750	0.750	0.000	0.000	0.000	0.00	0	12.00	A106/CC/	0.00	0.00	0.00	1085	450	1038	423	0.000	0.000	3.25600	0.00000	0.00000
FW-02.8D-20T	15	18.000	0	0.750	0.750	0.000	4.500	0.337	0.00	90	0.00	A106/CC/	0.00	0.00	0.00	1085	450	1038	423	0.000	0.000	3.25600	3.25600	0.00000
FW-02.8D-21E	4	18.000	0	0.750	0.750	0.000	0.000	0.000	1.50	90	0.00	A234/WPCWPC/	0.00	0.00	0.00	1085	450	1038	423	0.000	0.000	3.25600	0.00000	0.00000
FW-02.8D-22E	4	18.000	0	0.750	0.750	0.000	0.000	0.000	1.50	90	0.00	A234/WPCWPC/	0.00	0.00	0.00	1085	450	1038	423	0.000	0.000	3.25600	0.00000	0.00000
FW-02.8D-23P	54	18.000	0	0.750	0.750	0.000	0.000	0.000	0.00	90	5.00	A106/CC/	0.00	0.00	0.00	1085	450	1038	423	0.000	0.000	3.25600	0.00000	0.00000
FW-03.1D-01P	52	18.000	0	0.750	0.750	0.000	0.000	0.000	0.00	90	22.00	A106/CC/	0.00	0.00	0.00	1085	450	1038	423	0.000	0.000	3.25600	0.00000	0.00000
FW-03.1D-02E	2	18.000	0	0.750	0.750	0.000	0.000	0.000	1.50	90	0.00	A234/WPCWPC/	0.00	0.00	0.00	1085	450	1038	423	0.000	0.000	3.25600	0.00000	0.00000
FW-03.1D-03P	52	18.000	0	0.750	0.750	0.000	0.000	0.000	0.00	90	202.00	A106/CC/	0.00	0.00	0.00	1085	450	1038	423	0.000	0.000	3.25600	0.00000	0.00000
FW-03.1D-04B	1	18.000	0	0.750	0.750	0.000	0.000	0.000	42.30	90	0.00	A106/CC/	0.00	0.00	0.00	1085	450	1038	423	0.000	0.000	3.25600	0.00000	0.00000
FW-03.1D-05B	3	18.000	0	0.750	0.750	0.000	0.000	0.000	5.00	90	0.00	A106/CC/	0.00	0.00	0.00	1085	450	1038	423	0.000	0.000	3.25600	0.00000	0.00000
FW-03.1D-06P_1	53	18.000	0	0.750	0.750	0.000	0.000	0.000	0.00	24	270.00	A106/CC/	0.00	0.00	0.00	1085	450	1038	423	0.000	0.000	3.25600	0.00000	0.00000
FW-03.1D-06P_2	9	18.000	0	0.750	0.750	0.000	0.000	0.000	0.00	24	129.00	A106/CC/	0.00	0.00	0.00	1085	450	1038	423	0.000	0.000	3.25600	0.00000	0.00000
FW-03.1D-07B	1	18.000	0	0.750	0.750	0.000	0.000	0.000	5.00	90	0.00	A106/CC/	0.00	0.00	0.00	1085	450	1038	423	0.000	0.000	3.25600	0.00000	0.00000
FW-03.1D-08B	3	18.000	0	0.750	0.750	0.000	0.000	0.000	4.00	90	0.00	A106/CC/	0.00	0.00	0.00	1085	450	1038	423	0.000	0.000	3.25600	0.00000	0.00000
FW-03.1D-09P	53	18.000	0	0.750	0.750	0.000	0.000	0.000	0.00	90	65.00	A106/CC/	0.00	0.00	0.00	1085	450	1038	423	0.000	0.000	3.25600	0.00000	0.00000
FW-03.1D-10N	30	18.000	0	0.750	0.750	0.000	0.000	0.000	0.00	90	22.00	SA508/3/	0.50	0.00	0.50	1085	450	1038	423	0.000	0.000	3.25600	0.00000	0.00000
Line Name : FW-04.1A BFP 31 RECIRC																								
FW-04.1A-10P	64	6.625	0	0.864	0.864	0.000	0.000	0.000	0.00	0	6.00	A335/P22P22/	0.00	0.00	0.00	1440	450	1038	367	0.000	0.000	3.88300	0.00000	0.00000
FW-04.1A-01E	4	6.625	0	0.864	0.954	0.000	0.000	0.000	1.50	90	0.00	A182/F22F22/	0.00	0.00	0.00	1440	450	1038	367	0.000	0.000	3.88300	0.00000	0.00000
FW-04.1A-02P	54	6.625	0	0.864	0.864	0.000	0.000	0.000	0.00	90	59.00	A335/P22P22/	0.00	0.00	0.00	1440	450	1038	367	0.000	0.000	3.88300	0.00000	0.00000
FW-04.1A-03E	2	6.625	0	0.864	0.864	0.000	0.000	0.000	1.50	90	0.00	A182/F22F22/	0.00	0.00	0.00	1440	450	1038	367	0.000	0.000	3.88300	0.00000	0.00000
FW-04.1A-04P_1	52	6.625	0	0.864	0.864	0.000	0.000	0.000	0.00	90	99.38	A335/P22P22/	0.00	0.00	0.00	1440	450	1038	367	0.000	0.000	3.88300	0.00000	0.00000
FW-04.1A-04P_2	9	6.625	0	0.864	0.864	0.000	0.000	0.000	0.00	90	14.63	A335/P22P22/	0.00	0.00	0.00	1440	450	1038	367	0.000	0.000	3.88300	0.00000	0.00000
FW-04.1A-05E	2	6.625	0	0.864	0.864	0.000	0.000	0.000	1.50	90	0.00	A182/F22F22/	0.00	0.00	0.00	1440	450	1038	367	0.000	0.000	3.88300	0.00000	0.00000
FW-04.1A-06P_1	52	6.625	0	0.864	0.864	0.000	0.000	0.000	0.00	90	99.38	A335/P22P22/	0.00	0.00	0.00	1440	450	1038	367	0.000	0.000	3.88300	0.00000	0.00000
FW-04.1A-06P_2	9	6.625	0	0.864	0.864	0.000	0.000	0.000	0.00	90	86.63	A335/P22P22/	0.00	0.00	0.00	1440	450	1038	367	0.000	0.000	3.88300	0.00000	0.00000
FW-04.1A-07E	2	6.625	0	0.864	0.864	0.000	0.000	0.000	1.50	90	0.00	A182/F22F22/	0.00	0.00	0.00	1440	450	1038	367	0.000	0.000	3.88300	0.00000	0.00000
FW-04.1A-08E	4	6.625	0	0.864	0.864	0.000	0.000	0.000	1.50	90	0.00	A182/F22F22/	0.00	0.00	0.00	1440	450	1038	367	0.000	0.000	3.88300	0.00000	0.00000
FW-04.1A-09P	54	6.625	0	0.864	0.896	0.000	0.000	0.000	0.00	90	12.00	A335/P22P22/	0.00	0.00	0.00	1440	450	1038	367	0.000	0.000	3.88300	0.00000	0.00000
FW-04.2A-01R	17	6.625	0	0.864	0.000	0.000	4.500	0.674	0.00	90	0.00	A182/F22F22/	0.00	0.00	0.00	1440	450	1038	367	0.000	0.000	3.88300	3.88300	0.00000
FW-04.2A-02P	67	4.500	0	0.674	0.709	0.000	0.000	0.000	0.00	90	50.00	A335/P22P22/	0.00	0.00	0.00	1440	450	1038	367	0.000	0.000	3.88300	0.00000	0.00000
FW-04.2A-03B	2	4.500	0	0.674	0.674	0.000	0.000	0.000	5.00	90	0.00	A335/P22P22/	0.00	0.00	0.00	1440	450	1038	367	0.000	0.000	3.88300	0.00000	0.00000
FW-04.2A-04E	3	4.500	0	0.674	0.674	0.000	0.000	0.000	1.50	90	0.00	A182/F22F22/	0.00	0.00	0.00	1440	450	1038	367	0.000	0.000	3.88300	0.00000	0.00000
FW-04.2A-05P	53	4.500	0	0.674	0.674	0.000	0.000	0.000	0.00	135	21.00	A335/P22P22/	0.00	0.00	0.00	1440	450	1038	367	0.000	0.000	3.88300	0.00000	0.00000
FW-04.2A-06E	1	4.500	0	0.674	0.674	0.000	0.000	0.000	1.50	90	0.00	A182/F22F22/	0.00	0.00	0.00	1440	450	1038	367	0.000	0.000	3.88300	0.00000	0.00000
FW-04.2A-07P_1	51	4.500	0	0.674	0.674	0.000	0.000	0.000	0.00	90	67.50	A335/P22P22/	0.00	0.00	0.00	1440	450	1038	367	0.000	0.000	3.88300	0.00000	0.00000
FW-04.2A-07P_2	9	4.500	0	0.674	0.674	0.000	0.000	0.000	0.00	90	456.50	A335/P22P22/	0.00	0.00	0.00	1440	450	1038	367	0.000	0.000	3.88300	0.00000	0.00000
FW-04.2A-08B	2	4.500	0	0.674	0.674	0.000	0.000	0.000	5.00	90	0.00	A335/P22P22/	0.00	0.00	0.00	1440	450	1038	367	0.000	0.000	3.88300	0.00000	0.00000
FW-04.2A-09P_1	52	4.500	0	0.674	0.674	0.000	0.000	0.000	0.00	90	67.50	A335/P22P22/	0.00	0.00	0.00	1440	450	1038	367	0.000	0.000	3.88300	0.00000	0.00000
FW-04.2A-09P_2	9	4.500	0	0.674	0.674	0.000	0.000	0.000	0.00	90	246.50	A335/P22P22/	0.00	0.00	0.00	1440	450	1038	367	0.000	0.000	3.88300	0.00000	0.00000
FW-04.2A-10B	2	4.500	0	0.674	0.674	0.000	0.000	0.000	5.00	90	0.00	A335/P22P22/	0.00	0.00	0.00	1440	450	1038	367	0.000	0.000	3.88300	0.00000	0.00000
FW-04.2A-11P	52	4.500	0	0.674	0.674	0.000	0.000	0.000	0.00	90	32.00	A335/P22P22/	0.00	0.00	0.00	1440	450	1038	367	0.000	0.000	3.88300	0.00000	0.00000
FW-04.2A-12B	2	4.500	0	0.674	0.674	0.000	0.000	0.000	5.00	90	0.00	A335/P22P22/	0.00	0.00	0.00	1440	450	1038	367	0.000	0.000	3.88300	0.00000	0.00000
FW-04.2A-13P	52	4.500	0	0.674	0.674	0.000	0.000	0.000	0.00	90	68.00	A335/P22P22/	0.00	0.00	0.00	1440	450	1038	367	0.000	0.000	3.88300	0.00000	0.00000
FW-04.2A-14B	2	4.500	0	0.674	0.674	0.000	0.000	0.000	5.00	90	0.00	A335/P22P22/	0.00	0.00	0.00	1440	450	1038	367	0.000	0.000	3.88300	0.00000	0.00000
FW-04.2A-15P	52	4.500	0	0.674	0.674	0.000	0.000	0.000	0.00	90	8.00	A335/P22P22/	0.00	0.00	0.00	1440	450	1038	367	0.000	0.000	3.88300	0.00000	0.00000
FW-04.2A-16B	2	4.500	0	0.674	0.674	0.000	0.000	0.000	5.00	90	0.00	A335/P22P22/	0.00	0.00	0.00	1440	450	1038	367	0.000	0.000	3.88300	0.00000	0.00000
FW-04.2A-17P	52	4.500	0	0.674	0.674	0.000	0.000	0.000	0.00	90	68.00	A335/P22P22/	0.00	0.00	0.00	1440	450	1038	367	0.000	0.000	3.88300	0.00000	0.00000
FW-04.2A-18B	2	4.500	0	0.674	0.674	0.000	0.000	0.000	5.00	90	0.00	A335/P22P22/	0.00	0.00	0.00	1440	450	1038	367	0.000	0.000	3.88300	0.00000	0.00000
FW-04.2A-19P	52	4.500	0	0.674	0.674	0.000	0.000	0.000	0.00	180	26.00	A335/P22P22/	0.00	0.00	0.00	1440	450	1038	367	0.000	0.000	3.88300	0.00000	0.00000
FW-04.2A-20B	2	4.500	0	0.674	0.674	0.000	0.000	0.000	5.00	90	0.00	A335/P22P22/	0.00	0.00	0.00	1440	450	1038	367	0.000	0.000	3.88300	0.00000	0.00000
FW-04.2A-21P	52	4.500	0	0.674	0.700	0.000	0.000	0.000	0.00	90	17.00	A335/P22P22/	0.00	0.00	0.00	1440	450	1038	367	0.000	0.000	3.88300	0.00000	0.00000
FW-04.2A-22B	2	4.500	0	0.674	0.782	0.000	0.000	0.000	5.00	90	0.00	A335/P22P22/	0.00	0.00	0.00	1440	450	1038	367	0.000	0.000	3.88300	0.00000	0.00000
FW-04.2A-23P	52	4.500	0	0.674	0.724	0.000	0.000	0.000	0.00	90	18.00	A335/P22P22/	0.00	0.00	0.00	1440	450	1038	367	0.000	0.000	3.88300	0.00000	0.00000
FW-04.2A-24R	18	6.625	0	0.864	0.000	0.000	4.500	0.674	0.00	90	0.00	A182/F22F22/	0.00	0.00	0.00	1440	450	1038	367	0.000	0.000	3.88300	3.88300	0.00000
FW-05.1A-01V	24	6.625	0	0.864	0.864	0.000	0.000	0.000	0.00	90	0.00	A217/WC6WC6/	0.00	0.00	0.00	1440	450	-14	0	351.898	0.000	3.88300	0.00000	0.00000
FW-05.1A-02P	58	6.625	0	0.864	0.886	0.000	0.000	0.000	0.00	90	10.00	A335/P22P22/	0.00	0.00	0.00	1440	450	-14	0	351.898	0.000	3.88300	0.00000	0.00000
FW-05.1A-03V	22	6.625	0	0.864	0.864	0.000	0.000	0.000	0.00	90	0.00	A217/WC6WC6/	0.00	0.00	0.00	1440	450	-14	0	351.898	0.000	3.88300	0.00000	0.00000
FW-05.1A-04R	18	8.625	0	0.875	0.000	0.000	6.625	0.864	0.00	90	0.00	A234/WP22WP2/	0.00	0.00	0.00	1440	450	-14	0	351.898	0.000	3.88300	3.88300	0.00000
FW-05.2A-01N	30	8.625	0	0.875	0.875	0.000	0.000	0.000	0.00	90	0.00	A335/P22P22/	0.00	0.00	0.00	1440	450	-14	0	351.898	0.000	3.88300	0.00000	0.00000
Line Name : FW-04.1B BFP 32 RECIRC																								

Component Name	Geom Code	Pipe Size OD (in)	Sch.	Tnom (in)	Tinit (in)	Tcrit (in)	Br/Small End OD (in)	Br/Small Tnom (in)	R / D Ratio	Orient Angle (Deg.)	Pipe Length (in)	Spec/Type/ Class	Material Cr. (%)	Cu. (%)	Mo. (%)	Design Press. (psig)	Design Temp. (Deg. F)	Op. Press. (psig)	Op. Temp. (Deg. F)	Op. Enth. (Btu/lbm)	Op. Qual.	Flow Rate U/S Mn. (Mlbm/hr)	D/S Mn. (Mlbm/hr)	Br.
FW-04.1B-10P	64	6.625	0	0.864	0.864	0.000	0.000	0.000	0.00	0	6.00	A335/P22P22/	0.00	0.00	0.00	1440	450	1038	367	0.000	0.000	3.88300	0.00000	0.00000
FW-04.1B-01E	4	6.625	0	0.864	0.979	0.000	0.000	0.000	1.50	90	0.00	A182/F22F22/	0.00	0.00	0.00	1440	450	1038	367	0.000	0.000	3.88300	0.00000	0.00000
FW-04.1B-02P	54	6.625	0	0.864	0.912	0.000	0.000	0.000	0.00	90	6.00	A335/P22P22/	0.00	0.00	0.00	1440	450	1038	367	0.000	0.000	3.88300	0.00000	0.00000
FW-04.1B-03E	4	6.625	0	0.864	1.083	0.000	0.000	0.000	1.50	90	0.00	A182/F22F22/	0.00	0.00	0.00	1440	450	1038	367	0.000	0.000	3.88300	0.00000	0.00000
FW-04.1B-04P_1	54	6.625	0	0.864	0.864	0.000	0.000	0.000	0.00	90	99.38	A335/P22P22/	0.00	0.00	0.00	1440	450	1038	367	0.000	0.000	3.88300	0.00000	0.00000
FW-04.1B-04P_2	9	6.625	0	0.864	0.864	0.000	0.000	0.000	0.00	90	156.63	A335/P22P22/	0.00	0.00	0.00	1440	450	1038	367	0.000	0.000	3.88300	0.00000	0.00000
FW-04.1B-05E	2	6.625	0	0.864	0.864	0.000	0.000	0.000	1.50	90	0.00	A182/F22F22/	0.00	0.00	0.00	1440	450	1038	367	0.000	0.000	3.88300	0.00000	0.00000
FW-04.1B-06P_1	52	6.625	0	0.864	0.864	0.000	0.000	0.000	0.00	90	99.38	A335/P22P22/	0.00	0.00	0.00	1440	450	1038	367	0.000	0.000	3.88300	0.00000	0.00000
FW-04.1B-06P_2	9	6.625	0	0.864	0.864	0.000	0.000	0.000	0.00	90	86.63	A335/P22P22/	0.00	0.00	0.00	1440	450	1038	367	0.000	0.000	3.88300	0.00000	0.00000
FW-04.1B-07E	2	6.625	0	0.864	0.864	0.000	0.000	0.000	1.50	90	0.00	A182/F22F22/	0.00	0.00	0.00	1440	450	1038	367	0.000	0.000	3.88300	0.00000	0.00000
FW-04.1B-08E	4	6.625	0	0.864	0.864	0.000	0.000	0.000	1.50	90	0.00	A182/F22F22/	0.00	0.00	0.00	1440	450	1038	367	0.000	0.000	3.88300	0.00000	0.00000
FW-04.1B-09P	54	6.625	0	0.864	0.864	0.000	0.000	0.000	0.00	90	12.00	A335/P22P22/	0.00	0.00	0.00	1440	450	1038	367	0.000	0.000	3.88300	0.00000	0.00000
FW-04.2B-01R	17	6.625	0	0.864	0.000	0.000	4.500	0.674	0.00	90	0.00	A182/F22F22/	0.00	0.00	0.00	1440	450	1038	367	0.000	0.000	3.88300	3.88300	0.00000
FW-04.2B-02P	67	4.500	0	0.674	0.674	0.000	0.000	0.000	0.00	90	67.00	A335/P22P22/	0.00	0.00	0.00	1440	450	1038	367	0.000	0.000	3.88300	0.00000	0.00000
FW-04.2B-03B	2	4.500	0	0.674	0.674	0.000	0.000	0.000	5.00	90	0.00	A335/P22P22/	0.00	0.00	0.00	1440	450	1038	367	0.000	0.000	3.88300	0.00000	0.00000
FW-04.2B-04P	52	4.500	0	0.674	0.674	0.000	0.000	0.000	0.00	90	27.00	A335/P22P22/	0.00	0.00	0.00	1440	450	1038	367	0.000	0.000	3.88300	0.00000	0.00000
FW-04.2B-05E	1	4.500	0	0.674	0.674	0.000	0.000	0.000	1.50	90	0.00	A182/F22F22/	0.00	0.00	0.00	1440	450	1038	367	0.000	0.000	3.88300	0.00000	0.00000
FW-04.2B-06P	51	4.500	0	0.674	0.674	0.000	0.000	0.000	0.00	135	21.00	A335/P22P22/	0.00	0.00	0.00	1440	450	1038	367	0.000	0.000	3.88300	0.00000	0.00000
FW-04.2B-07E	1	4.500	0	0.674	0.674	0.000	0.000	0.000	1.50	90	0.00	A182/F22F22/	0.00	0.00	0.00	1440	450	1038	367	0.000	0.000	3.88300	0.00000	0.00000
FW-04.2B-08P_1	51	4.500	0	0.674	0.674	0.000	0.000	0.000	0.00	90	67.50	A335/P22P22/	0.00	0.00	0.00	1440	450	1038	367	0.000	0.000	3.88300	0.00000	0.00000
FW-04.2B-08P_2	9	4.500	0	0.674	0.674	0.000	0.000	0.000	0.00	90	495.50	A335/P22P22/	0.00	0.00	0.00	1440	450	1038	367	0.000	0.000	3.88300	0.00000	0.00000
FW-04.2B-09B	2	4.500	0	0.674	0.674	0.000	0.000	0.000	5.00	90	0.00	A335/P22P22/	0.00	0.00	0.00	1440	450	1038	367	0.000	0.000	3.88300	0.00000	0.00000
FW-04.2B-10P_1	52	4.500	0	0.674	0.674	0.000	0.000	0.000	0.00	90	67.50	A335/P22P22/	0.00	0.00	0.00	1440	450	1038	367	0.000	0.000	3.88300	0.00000	0.00000
FW-04.2B-10P_2	9	4.500	0	0.674	0.674	0.000	0.000	0.000	0.00	90	246.50	A335/P22P22/	0.00	0.00	0.00	1440	450	1038	367	0.000	0.000	3.88300	0.00000	0.00000
FW-04.2B-11B	2	4.500	0	0.674	0.674	0.000	0.000	0.000	5.00	90	0.00	A335/P22P22/	0.00	0.00	0.00	1440	450	1038	367	0.000	0.000	3.88300	0.00000	0.00000
FW-04.2B-12P	52	4.500	0	0.674	0.674	0.000	0.000	0.000	0.00	90	32.00	A335/P22P22/	0.00	0.00	0.00	1440	450	1038	367	0.000	0.000	3.88300	0.00000	0.00000
FW-04.2B-13B	2	4.500	0	0.674	0.674	0.000	0.000	0.000	5.00	90	0.00	A335/P22P22/	0.00	0.00	0.00	1440	450	1038	367	0.000	0.000	3.88300	0.00000	0.00000
FW-04.2B-14P	52	4.500	0	0.674	0.674	0.000	0.000	0.000	0.00	90	68.00	A335/P22P22/	0.00	0.00	0.00	1440	450	1038	367	0.000	0.000	3.88300	0.00000	0.00000
FW-04.2B-15B	2	4.500	0	0.674	0.674	0.000	0.000	0.000	5.00	90	0.00	A335/P22P22/	0.00	0.00	0.00	1440	450	1038	367	0.000	0.000	3.88300	0.00000	0.00000
FW-04.2B-16P	52	4.500	0	0.674	0.674	0.000	0.000	0.000	0.00	90	8.00	A335/P22P22/	0.00	0.00	0.00	1440	450	1038	367	0.000	0.000	3.88300	0.00000	0.00000
FW-04.2B-17B	2	4.500	0	0.674	0.674	0.000	0.000	0.000	5.00	90	0.00	A335/P22P22/	0.00	0.00	0.00	1440	450	1038	367	0.000	0.000	3.88300	0.00000	0.00000
FW-04.2B-18P	52	4.500	0	0.674	0.674	0.000	0.000	0.000	0.00	90	54.00	A335/P22P22/	0.00	0.00	0.00	1440	450	1038	367	0.000	0.000	3.88300	0.00000	0.00000
FW-04.2B-19B	2	4.500	0	0.674	0.674	0.000	0.000	0.000	5.00	90	0.00	A335/P22P22/	0.00	0.00	0.00	1440	450	1038	367	0.000	0.000	3.88300	0.00000	0.00000
FW-04.2B-20P	52	4.500	0	0.674	0.674	0.000	0.000	0.000	0.00	180	8.00	A335/P22P22/	0.00	0.00	0.00	1440	450	1038	367	0.000	0.000	3.88300	0.00000	0.00000
FW-04.2B-21B	2	4.500	0	0.674	0.674	0.000	0.000	0.000	5.00	90	0.00	A335/P22P22/	0.00	0.00	0.00	1440	450	1038	367	0.000	0.000	3.88300	0.00000	0.00000
FW-04.2B-22P	52	4.500	0	0.674	0.716	0.000	0.000	0.000	0.00	90	26.00	A335/P22P22/	0.00	0.00	0.00	1440	450	1038	367	0.000	0.000	3.88300	0.00000	0.00000
FW-04.2B-23R	18	6.625	0	0.864	0.000	0.000	4.500	0.674	0.00	90	0.00	A182/F22F22/	0.00	0.00	0.00	1440	450	1038	367	0.000	0.000	3.88300	3.88300	0.00000
FW-05.1B-01V	24	6.625	0	0.864	0.864	0.000	0.000	0.000	0.00	90	0.00	A217/WC6WC6/	0.00	0.00	0.00	1440	450	-14	0	351.898	0.000	3.88300	0.00000	0.00000
FW-05.1B-02P	58	6.625	0	0.864	0.864	0.000	0.000	0.000	0.00	90	10.00	A335/P22P22/	0.00	0.00	0.00	1440	450	-14	0	351.898	0.000	3.88300	0.00000	0.00000
FW-05.1B-03V	22	6.625	0	0.864	0.864	0.000	0.000	0.000	0.00	90	0.00	A217/WC6WC6/	0.00	0.00	0.00	1440	450	-14	0	351.898	0.000	3.88300	0.00000	0.00000
FW-05.1B-04R	18	8.625	0	0.875	0.000	0.000	6.625	0.864	0.00	90	0.00	A234/WP22WP2/	0.00	0.00	0.00	1440	450	-14	0	351.898	0.000	3.88300	3.88300	0.00000
FW-05.2B-01N	30	8.625	0	0.875	0.875	0.000	0.000	0.000	0.00	90	0.00	A335/P22P22/	0.00	0.00	0.00	1440	450	-14	0	351.898	0.000	3.88300	0.00000	0.00000
Line Name : HD-01.1A FWH 36A to HD TK																								
HD-01.1A-01N	31	10.750	0	0.307	0.288	0.000	0.000	0.000	0.00	90	0.00	A105/A105A10/	0.00	0.00	0.00	450	450	334	387	0.000	0.000	0.50100	0.00000	0.00000
HD-01.1A-02P	61	10.750	0	0.307	0.307	0.000	0.000	0.000	0.00	180	104.00	A106/BB/	0.00	0.00	0.00	450	450	334	387	0.000	0.000	0.50100	0.00000	0.00000
HD-01.1A-03E	2	10.750	0	0.307	0.307	0.000	0.000	0.000	1.50	90	0.00	A234/WPBWPB/	0.00	0.00	0.00	450	450	334	387	0.000	0.000	0.50100	0.00000	0.00000
HD-01.1A-04P	52	10.750	0	0.307	0.307	0.000	0.000	0.000	0.00	90	151.00	A106/BB/	0.00	0.00	0.00	450	450	334	387	0.000	0.000	0.50100	0.00000	0.00000
HD-01.1A-05E	2	10.750	0	0.307	0.307	0.000	0.000	0.000	1.50	90	0.00	A234/WPBWPB/	0.00	0.00	0.00	450	450	334	387	0.000	0.000	0.50100	0.00000	0.00000
HD-01.1A-06P	52	10.750	0	0.307	0.307	0.000	0.000	0.000	0.00	90	54.00	A106/BB/	0.00	0.00	0.00	450	450	334	387	0.000	0.000	0.50100	0.00000	0.00000
HD-01.1A-07E	2	10.750	0	0.307	0.307	0.000	0.000	0.000	1.50	90	0.00	A234/WPBWPB/	0.00	0.00	0.00	450	450	334	387	0.000	0.000	0.50100	0.00000	0.00000
HD-01.1A-08P	52	10.750	0	0.307	0.307	0.000	0.000	0.000	0.00	180	39.00	A106/BB/	0.00	0.00	0.00	450	450	334	387	0.000	0.000	0.50100	0.00000	0.00000
HD-01.1A-09E	2	10.750	0	0.307	0.307	0.000	0.000	0.000	1.50	90	0.00	A234/WPBWPB/	0.00	0.00	0.00	450	450	334	387	0.000	0.000	0.50100	0.00000	0.00000
HD-01.1A-10P	52	10.750	0	0.307	0.307	0.000	0.000	0.000	0.00	90	4.00	A106/BB/	0.00	0.00	0.00	450	450	334	387	0.000	0.000	0.50100	0.00000	0.00000
HD-01.2A-01R	7	10.750	0	0.307	0.000	0.000	6.625	0.280	0.00	90	0.00	A234/WPBWPB/	0.00	0.00	0.00	450	450	334	387	0.000	0.000	0.50100	0.50100	0.00000
HD-02.1A 01V	24	6.625	0	0.280	0.280	0.000	0.000	0.000	0.00	90	0.00	A217/WC6WC6/	0.00	0.00	0.00	450	450	171	0	361.299	0.000	0.50100	0.00000	0.00000
HD-02.1A-02R	18	10.750	40	0.365	0.000	0.000	6.625	0.280	0.00	90	0.00	A234/WPBWPB/	0.00	0.00	0.00	450	450	171	0	361.299	0.000	0.50100	0.50100	0.00000
HD-02.2A-01V	22	10.750	0	0.365	0.365	0.000	0.000	0.000	0.00	90	0.00	A217/WC6WC6/	0.00	0.00	0.00	450	450	171	0	361.299	0.000	0.50100	0.00000	0.00000
HD-02.2A-02N	30	10.750	0	0.365	0.365	0.000	0.000	0.000	0.00	90	0.00	A105/A105A10/	0.00	0.00	0.00	450	450	171	0	361.299	0.000	0.50100	0.00000	0.00000
Line Name : HD-01.1B FWH 36B to HD TK																								

Component Name	Geom Code	Pipe Size OD (in)	Sch.	Tnom (in)	Tinit (in)	Tcrit (in)	Br/Small End OD (in)	Br/Small Tnom (in)	R / D Ratio	Orient Angle (Deg.)	Pipe Length (in)	Spec/Type/ Class	Material Cr. (%)	Cu. (%)	Mo. (%)	Design Press. (psig)	Design Temp. (Deg. F)	Op. Press. (psig)	Op. Temp. (Deg. F)	Op. Enth. (Btu/lbm)	Op. Qual.	Flow Rate U/S Mn. (Mlbm/hr)	D/S Mn. (Mlbm/hr)	Br.
HD-01.1B-01N	31	10.750	0	0.307	0.288	0.000	0.000	0.000	0.00	90	0.00	A105/A105A10/	0.00	0.00	0.00	450	450	334	387	0.000	0.000	0.50100	0.00000	0.00000
HD-01.1B-02P	61	10.750	0	0.307	0.307	0.000	0.000	0.000	0.00	180	104.00	A106/BB/	0.00	0.00	0.00	450	450	334	387	0.000	0.000	0.50100	0.00000	0.00000
HD-01.1B-03E	2	10.750	0	0.307	0.307	0.000	0.000	0.000	1.50	90	0.00	A234/WPBWPB/	0.00	0.00	0.00	450	450	334	387	0.000	0.000	0.50100	0.00000	0.00000
HD-01.1B-04P	52	10.750	0	0.307	0.307	0.000	0.000	0.000	0.00	90	151.00	A106/BB/	0.00	0.00	0.00	450	450	334	387	0.000	0.000	0.50100	0.00000	0.00000
HD-01.1B-05E	2	10.750	0	0.307	0.307	0.000	0.000	0.000	1.50	90	0.00	A234/WPBWPB/	0.00	0.00	0.00	450	450	334	387	0.000	0.000	0.50100	0.00000	0.00000
HD-01.1B-06P	52	10.750	0	0.307	0.307	0.000	0.000	0.000	0.00	180	39.00	A106/BB/	0.00	0.00	0.00	450	450	334	387	0.000	0.000	0.50100	0.00000	0.00000
HD-01.1B-07E	2	10.750	0	0.307	0.307	0.000	0.000	0.000	1.50	90	0.00	A234/WPBWPB/	0.00	0.00	0.00	450	450	334	387	0.000	0.000	0.50100	0.00000	0.00000
HD-01.2B-01R	7	10.750	0	0.307	0.000	0.000	6.625	0.280	0.00	90	0.00	A234/WPBWPB/	0.00	0.00	0.00	450	450	334	387	0.000	0.000	0.50100	0.50100	0.00000
HD-02.1B-01V	24	6.625	0	0.280	0.280	0.000	0.000	0.000	0.00	90	0.00	A217/WC6WC6/	0.00	0.00	0.00	450	450	171	0	361.299	0.000	0.50100	0.00000	0.00000
HD-02.1B-02R	18	10.750	40	0.365	0.000	0.000	6.625	0.280	0.00	90	0.00	A234/WPBWPB/	0.00	0.00	0.00	450	450	171	0	361.299	0.000	0.50100	0.50100	0.00000
HD-02.2B-01V	22	10.750	0	0.365	0.365	0.000	0.000	0.000	0.00	90	0.00	A217/WC6WC6/	0.00	0.00	0.00	450	450	171	0	361.299	0.000	0.50100	0.00000	0.00000
HD-02.2B-02N	30	10.750	0	0.365	0.365	0.000	0.000	0.000	0.00	90	0.00	A105/A105A10/	0.00	0.00	0.00	450	450	171	0	361.299	0.000	0.50100	0.00000	0.00000
Line Name : HD-01.1C FWH 36C to HD TK																								
HD-01.1C-01N	31	10.750	0	0.307	0.288	0.000	0.000	0.000	0.00	90	0.00	A105/A105A10/	0.00	0.00	0.00	450	450	334	387	0.000	0.000	0.50100	0.00000	0.00000
HD-01.1C-02P	61	10.750	0	0.307	0.307	0.000	0.000	0.000	0.00	180	68.00	A106/BB/	0.00	0.00	0.00	450	450	334	387	0.000	0.000	0.50100	0.00000	0.00000
HD-01.1C-03E	2	10.750	0	0.307	0.307	0.000	0.000	0.000	1.50	90	0.00	A234/WPBWPB/	0.00	0.00	0.00	450	450	334	387	0.000	0.000	0.50100	0.00000	0.00000
HD-01.1C-04P	52	10.750	0	0.307	0.307	0.000	0.000	0.000	0.00	90	75.00	A106/BB/	0.00	0.00	0.00	450	450	334	387	0.000	0.000	0.50100	0.00000	0.00000
HD-01.1C-05E	2	10.750	0	0.307	0.307	0.000	0.000	0.000	1.50	90	0.00	A234/WPBWPB/	0.00	0.00	0.00	450	450	334	387	0.000	0.000	0.50100	0.00000	0.00000
HD-01.1C-06P	52	10.750	0	0.307	0.307	0.000	0.000	0.000	0.00	180	6.00	A106/BB/	0.00	0.00	0.00	450	450	334	387	0.000	0.000	0.50100	0.00000	0.00000
HD-01.1C-07E	4	10.750	0	0.307	0.307	0.000	0.000	0.000	1.50	90	0.00	A234/WPBWPB/	0.00	0.00	0.00	450	450	334	387	0.000	0.000	0.50100	0.00000	0.00000
HD-01.1C-08P	54	10.750	0	0.307	0.307	0.000	0.000	0.000	0.00	90	151.00	A106/BB/	0.00	0.00	0.00	450	450	334	387	0.000	0.000	0.50100	0.00000	0.00000
HD-01.1C-09E	2	10.750	0	0.307	0.307	0.000	0.000	0.000	1.50	90	0.00	A234/WPBWPB/	0.00	0.00	0.00	450	450	334	387	0.000	0.000	0.50100	0.00000	0.00000
HD-01.1C-10P	52	10.750	0	0.307	0.307	0.000	0.000	0.000	0.00	180	39.00	A106/BB/	0.00	0.00	0.00	450	450	334	387	0.000	0.000	0.50100	0.00000	0.00000
HD-01.1C-11E	2	10.750	0	0.421	0.421	0.000	0.000	0.000	1.50	90	0.00	A234/WPBWPB/	0.00	0.00	0.00	450	450	334	387	0.000	0.000	0.50100	0.00000	0.00000
HD-01.2C-01R	7	10.750	0	0.307	0.000	0.000	6.625	0.280	0.00	90	0.00	A234/WPBWPB/	0.00	0.00	0.00	450	450	334	387	0.000	0.000	0.50100	0.50100	0.00000
HD-02.1C-01V	24	6.625	0	0.280	0.280	0.000	0.000	0.000	0.00	90	0.00	A217/WC6WC6/	0.00	0.00	0.00	450	450	171	0	361.299	0.000	0.50100	0.00000	0.00000
HD-02.1C-02R	18	10.750	40	0.365	0.000	0.000	6.625	0.280	0.00	90	0.00	A234/WPBWPB/	0.00	0.00	0.00	450	450	171	0	361.299	0.000	0.50100	0.50100	0.00000
HD-02.2C-01V	22	10.750	40	0.365	0.000	0.000	0.000	0.000	0.00	90	0.00	A217/WC6WC6/	0.00	0.00	0.00	450	450	171	0	361.299	0.000	0.50100	0.00000	0.00000
HD-02.2C-02N	30	10.750	40	0.365	0.000	0.000	0.000	0.000	0.00	90	0.00	A105/A105A10/	0.00	0.00	0.00	450	450	171	0	361.299	0.000	0.50100	0.00000	0.00000
Line Name : HD-03.1A FWH 35A to HD TK																								
HD-03.1A-01N	31	10.750	20	0.250	0.240	0.000	0.000	0.000	0.00	90	0.00	A106/BB/	0.00	0.00	0.00	250	400	171	374	0.000	0.000	0.31000	0.00000	0.00000
HD-03.1A-02P	61	10.750	0	0.250	0.250	0.000	0.000	0.000	0.00	180	60.00	A53/BS/	0.00	0.00	0.00	250	400	171	374	0.000	0.000	0.31000	0.00000	0.00000
HD-03.1A-03E	2	10.750	0	0.250	0.250	0.000	0.000	0.000	1.50	90	0.00	A234/WPBWPB/	0.00	0.00	0.00	250	400	171	374	0.000	0.000	0.31000	0.00000	0.00000
HD-03.1A-04P	52	10.750	0	0.250	0.250	0.000	0.000	0.000	0.00	90	9.75	A53/BS/	0.00	0.00	0.00	250	400	171	374	0.000	0.000	0.31000	0.00000	0.00000
HD-03.1A-05E	4	10.750	0	0.250	0.250	0.000	0.000	0.000	1.00	90	0.00	A234/WPBWPB/	0.00	0.00	0.00	250	400	171	374	0.000	0.000	0.31000	0.00000	0.00000
HD-03.1A-06P	54	10.750	0	0.250	0.250	0.000	0.000	0.000	0.00	180	26.75	A53/BS/	0.00	0.00	0.00	250	400	171	374	0.000	0.000	0.31000	0.00000	0.00000
HD-03.1A-07E	2	10.750	0	0.250	0.250	0.000	0.000	0.000	1.50	90	0.00	A234/WPBWPB/	0.00	0.00	0.00	250	400	171	374	0.000	0.000	0.31000	0.00000	0.00000
HD-03.1A-08P	52	10.750	0	0.250	0.250	0.000	0.000	0.000	0.00	90	66.00	A53/BS/	0.00	0.00	0.00	250	400	171	374	0.000	0.000	0.31000	0.00000	0.00000
HD-03.1A-09E	2	10.750	0	0.250	0.250	0.000	0.000	0.000	1.50	90	0.00	A234/WPBWPB/	0.00	0.00	0.00	250	400	171	374	0.000	0.000	0.31000	0.00000	0.00000
HD-03.1A-10P	52	10.750	0	0.250	0.250	0.000	0.000	0.000	0.00	180	96.00	A53/BS/	0.00	0.00	0.00	250	400	171	374	0.000	0.000	0.31000	0.00000	0.00000
HD-03.1A-11E	2	10.750	0	0.250	0.250	0.000	0.000	0.000	1.50	90	0.00	A234/WPBWPB/	0.00	0.00	0.00	250	400	171	374	0.000	0.000	0.31000	0.00000	0.00000
HD-03.1A-12E	4	10.750	0	0.250	0.250	0.000	0.000	0.000	1.50	90	0.00	A234/WPBWPB/	0.00	0.00	0.00	250	400	171	374	0.000	0.000	0.31000	0.00000	0.00000
HD-03.1A-13P	54	10.750	0	0.250	0.250	0.000	0.000	0.000	0.00	0	18.00	A53/BS/	0.00	0.00	0.00	250	400	171	374	0.000	0.000	0.31000	0.00000	0.00000
HD-03.1A-14E	2	10.750	0	0.250	0.250	0.000	0.000	0.000	1.50	90	0.00	A234/WPBWPB/	0.00	0.00	0.00	250	400	171	374	0.000	0.000	0.31000	0.00000	0.00000
HD-03.1A-15V	22	10.750	0	0.250	0.250	0.000	0.000	0.000	0.00	90	0.00	A216/WCBWCB/	0.00	0.00	0.00	250	400	171	374	0.000	0.000	0.31000	0.00000	0.00000
HD-03.1A-16N	30	10.750	0	0.250	0.250	0.000	0.000	0.000	0.00	90	0.00	A106/BB/	0.00	0.00	0.00	250	400	171	374	0.000	0.000	0.31000	0.00000	0.00000
Line Name : HD-03.1B FWH 35B to HD TK																								
HD-03.1B-01N	31	10.750	20	0.250	0.240	0.000	0.000	0.000	0.00	90	0.00	A106/BB/	0.00	0.00	0.00	250	400	171	374	0.000	0.000	0.31000	0.00000	0.00000
HD-03.1B-02P	61	10.750	0	0.250	0.250	0.000	0.000	0.000	0.00	180	108.00	A53/BS/	0.00	0.00	0.00	250	400	171	374	0.000	0.000	0.31000	0.00000	0.00000
HD-03.1B-03E	2	10.750	0	0.250	0.250	0.000	0.000	0.000	1.50	90	0.00	A234/WPBWPB/	0.00	0.00	0.00	250	400	171	374	0.000	0.000	0.31000	0.00000	0.00000
HD-03.1B-04P	52	10.750	0	0.250	0.250	0.000	0.000	0.000	0.00	90	17.00	A53/BS/	0.00	0.00	0.00	250	400	171	374	0.000	0.000	0.31000	0.00000	0.00000
HD-03.1B-05E	2	10.750	0	0.250	0.250	0.000	0.000	0.000	1.50	90	0.00	A234/WPBWPB/	0.00	0.00	0.00	250	400	171	374	0.000	0.000	0.31000	0.00000	0.00000
HD-03.1B-06P	52	10.750	0	0.250	0.250	0.000	0.000	0.000	0.00	90	66.00	A53/BS/	0.00	0.00	0.00	250	400	171	374	0.000	0.000	0.31000	0.00000	0.00000
HD-03.1B-07E	2	10.750	0	0.250	0.250	0.000	0.000	0.000	1.50	90	0.00	A234/WPBWPB/	0.00	0.00	0.00	250	400	171	374	0.000	0.000	0.31000	0.00000	0.00000
HD-03.1B-08P	52	10.750	0	0.250	0.250	0.000	0.000	0.000	0.00	180	96.00	A53/BS/	0.00	0.00	0.00	250	400	171	374	0.000	0.000	0.31000	0.00000	0.00000
HD-03.1B-09E	2	10.750	0	0.250	0.250	0.000	0.000	0.000	1.50	90	0.00	A234/WPBWPB/	0.00	0.00	0.00	250	400	171	374	0.000	0.000	0.31000	0.00000	0.00000
HD-03.1B-10E	4	10.750	0	0.250	0.250	0.000	0.000	0.000	1.50	90	0.00	A234/WPBWPB/	0.00	0.00	0.00	250	400	171	374	0.000	0.000	0.31000	0.00000	0.00000
HD-03.1B-11P	54	10.750	0	0.250	0.250	0.000	0.000	0.000	0.00	0	18.00	A53/BS/	0.00	0.00	0.00	250	400	171	374	0.000	0.000	0.31000	0.00000	0.00000

Component Name	Geom Code	Pipe Size OD (in)	Sch.	Tnom (in)	Tinit (in)	Tcrit (in)	Br/Small End OD (in)	Br/Small Tnom (in)	R / D Ratio	Orient Angle (Deg.)	Pipe Length (in)	Spec/Type/ Class	Material Cr. (%)	Cu. (%)	Mo. (%)	Design Press. (psig)	Design Temp. (Deg. F)	Op. Press. (psig)	Op. Temp. (Deg. F)	Op. Enth. (Btu/lbm)	Op. Qual.	Flow Rate U/S Mn. (Mlbm/hr)	D/S Mn. (Mlbm/hr)	Br.
HD-03.1B-12E	2	10.750	0	0.250	0.250	0.000	0.000	0.000	1.50	90	0.00	A234/WPBWPB/	0.00	0.00	0.00	250	400	171	374	0.000	0.000	0.31000	0.00000	0.00000
HD-03.1B-13V	22	10.750	0	0.250	0.250	0.000	0.000	0.000	0.00	90	0.00	A216/WCBWCB/	0.00	0.00	0.00	250	400	171	374	0.000	0.000	0.31000	0.00000	0.00000
HD-03.1B-14N	30	10.750	0	0.250	0.250	0.000	0.000	0.000	0.00	90	0.00	A106/BB/	0.00	0.00	0.00	250	400	171	374	0.000	0.000	0.31000	0.00000	0.00000
Line Name : HD-03.1C FWH 35C to HD TK																								
HD-03.1C-01N	31	10.750	20	0.250	0.240	0.000	0.000	0.000	0.00	90	0.00	A106/BB/	0.00	0.00	0.00	250	400	171	374	0.000	0.000	0.31000	0.00000	0.00000
HD-03.1C-02P	61	10.750	0	0.250	0.250	0.000	0.000	0.000	0.00	180	60.00	A53/BS/	0.00	0.00	0.00	250	400	171	374	0.000	0.000	0.31000	0.00000	0.00000
HD-03.1C-03E	2	10.750	0	0.250	0.250	0.000	0.000	0.000	1.50	90	0.00	A234/WPBWPB/	0.00	0.00	0.00	250	400	171	374	0.000	0.000	0.31000	0.00000	0.00000
HD-03.1C-04P	52	10.750	0	0.250	0.250	0.000	0.000	0.000	0.00	90	60.00	A53/BS/	0.00	0.00	0.00	250	400	171	374	0.000	0.000	0.31000	0.00000	0.00000
HD-03.1C-05E	2	10.750	0	0.250	0.250	0.000	0.000	0.000	1.50	90	0.00	A234/WPBWPB/	0.00	0.00	0.00	250	400	171	374	0.000	0.000	0.31000	0.00000	0.00000
HD-03.1C-06P	52	10.750	0	0.250	0.250	0.000	0.000	0.000	0.00	180	18.00	A53/BS/	0.00	0.00	0.00	250	400	171	374	0.000	0.000	0.31000	0.00000	0.00000
HD-03.1C-07E	2	10.750	0	0.250	0.250	0.000	0.000	0.000	1.50	90	0.00	A234/WPBWPB/	0.00	0.00	0.00	250	400	171	374	0.000	0.000	0.31000	0.00000	0.00000
HD-03.1C-08P	52	10.750	0	0.250	0.250	0.000	0.000	0.000	0.00	90	66.00	A53/BS/	0.00	0.00	0.00	250	400	171	374	0.000	0.000	0.31000	0.00000	0.00000
HD-03.1C-09E	2	10.750	0	0.250	0.250	0.000	0.000	0.000	1.50	90	0.00	A234/WPBWPB/	0.00	0.00	0.00	250	400	171	374	0.000	0.000	0.31000	0.00000	0.00000
HD-03.1C-10P	52	10.750	0	0.250	0.250	0.000	0.000	0.000	0.00	90	29.00	A53/BS/	0.00	0.00	0.00	250	400	171	374	0.000	0.000	0.31000	0.00000	0.00000
HD-03.1C-11E	2	10.750	0	0.250	0.250	0.000	0.000	0.000	1.50	90	0.00	A234/WPBWPB/	0.00	0.00	0.00	250	400	171	374	0.000	0.000	0.31000	0.00000	0.00000
HD-03.1C-12P	52	10.750	0	0.250	0.250	0.000	0.000	0.000	0.00	180	96.00	A53/BS/	0.00	0.00	0.00	250	400	171	374	0.000	0.000	0.31000	0.00000	0.00000
HD-03.1C-13E	2	10.750	0	0.250	0.250	0.000	0.000	0.000	1.50	90	0.00	A234/WPBWPB/	0.00	0.00	0.00	250	400	171	374	0.000	0.000	0.31000	0.00000	0.00000
HD-03.1C-14E	4	10.750	0	0.250	0.250	0.000	0.000	0.000	1.50	90	0.00	A234/WPBWPB/	0.00	0.00	0.00	250	400	171	374	0.000	0.000	0.31000	0.00000	0.00000
HD-03.1C-15P	54	10.750	0	0.250	0.250	0.000	0.000	0.000	0.00	0	18.00	A53/BS/	0.00	0.00	0.00	250	400	171	374	0.000	0.000	0.31000	0.00000	0.00000
HD-03.1C-16E	2	10.750	0	0.250	0.250	0.000	0.000	0.000	1.50	90	0.00	A234/WPBWPB/	0.00	0.00	0.00	250	400	171	374	0.000	0.000	0.31000	0.00000	0.00000
HD-03.1C-17V	22	10.750	0	0.250	0.250	0.000	0.000	0.000	0.00	90	0.00	A216/WCBWCB/	0.00	0.00	0.00	250	400	171	374	0.000	0.000	0.31000	0.00000	0.00000
HD-03.1C-18N	30	10.750	0	0.250	0.250	0.000	0.000	0.000	0.00	90	0.00	A106/BB/	0.00	0.00	0.00	250	400	171	374	0.000	0.000	0.31000	0.00000	0.00000
Line Name : HD-04.1A FWH 34A to FWH 33A																								
HD-4.1A-01N	31	6.625	0	0.280	0.280	0.000	0.000	0.000	0.00	90	0.00	A53/BS/	0.00	0.00	0.00	100	400	50	250	0.000	0.000	0.16800	0.00000	0.00000
HD-4.1A-02P	61	6.625	0	0.280	0.280	0.000	0.000	0.000	0.00	180	70.00	A53/BS/	0.00	0.00	0.00	100	400	50	250	0.000	0.000	0.16800	0.00000	0.00000
HD-4.1A-03T	15	6.625	0	0.280	0.280	0.000	6.625	0.280	0.00	180	0.00	A234/WPBWPB/	0.00	0.00	0.00	100	400	50	250	0.000	0.000	0.16800	0.16800	0.00000
HD-4.1A-04P	65	6.625	0	0.280	0.280	0.000	0.000	0.000	0.00	180	33.00	A53/BS/	0.00	0.00	0.00	100	400	50	250	0.000	0.000	0.16800	0.00000	0.00000
HD-4.1A-05E	2	6.625	0	0.280	0.280	0.000	0.000	0.000	1.50	90	0.00	A234/WPBWPB/	0.00	0.00	0.00	100	400	50	250	0.000	0.000	0.16800	0.00000	0.00000
HD-4.1A-06E	3	6.625	0	0.280	0.280	0.000	0.000	0.000	1.50	90	0.00	A234/WPBWPB/	0.00	0.00	0.00	100	400	50	250	0.000	0.000	0.16800	0.00000	0.00000
HD-4.1A-07P	53	6.625	0	0.280	0.280	0.000	0.000	0.000	0.00	90	11.00	A53/BS/	0.00	0.00	0.00	100	400	50	250	0.000	0.000	0.16800	0.00000	0.00000
HD-4.1A-08E	2	6.625	0	0.280	0.280	0.000	0.000	0.000	1.50	90	0.00	A234/WPBWPB/	0.00	0.00	0.00	100	400	50	250	0.000	0.000	0.16800	0.00000	0.00000
HD-4.1A-09P_1	52	6.625	0	0.280	0.280	0.000	0.000	0.000	0.00	90	99.38	A53/BS/	0.00	0.00	0.00	100	400	50	250	0.000	0.000	0.16800	0.00000	0.00000
HD-4.1A-09P_2	9	6.625	0	0.280	0.280	0.000	0.000	0.000	0.00	90	919.63	A53/BS/	0.00	0.00	0.00	100	400	50	250	0.000	0.000	0.16800	0.00000	0.00000
HD-4.1A-10E	2	6.625	0	0.280	0.280	0.000	0.000	0.000	1.50	90	0.00	A234/WPBWPB/	0.00	0.00	0.00	100	400	50	250	0.000	0.000	0.16800	0.00000	0.00000
HD-4.1A-11P	52	6.625	0	0.280	0.280	0.000	0.000	0.000	0.00	0	30.00	A53/BS/	0.00	0.00	0.00	100	400	50	250	0.000	0.000	0.16800	0.00000	0.00000
HD-4.1A-12E	2	6.625	0	0.280	0.280	0.000	0.000	0.000	1.50	90	0.00	A234/WPBWPB/	0.00	0.00	0.00	100	400	50	250	0.000	0.000	0.16800	0.00000	0.00000
HD-4.1A-13P	52	6.625	0	0.280	0.280	0.000	0.000	0.000	0.00	90	63.00	A53/BS/	0.00	0.00	0.00	100	400	50	250	0.000	0.000	0.16800	0.00000	0.00000
HD-4.1A-14E	2	6.625	0	0.280	0.280	0.000	0.000	0.000	1.50	90	0.00	A234/WPBWPB/	0.00	0.00	0.00	100	400	50	250	0.000	0.000	0.16800	0.00000	0.00000
HD-4.1A-15P	52	6.625	0	0.280	0.280	0.000	0.000	0.000	0.00	0	57.00	A53/BS/	0.00	0.00	0.00	100	400	50	250	0.000	0.000	0.16800	0.00000	0.00000
HD-4.2A-01E	16	6.625	40	0.280	0.000	0.000	4.500	0.237	1.50	90	0.00	A234/WPBWPB/	0.00	0.00	0.00	100	400	50	250	0.000	0.000	0.16800	0.16800	0.00000
HD-4.2A-02V	22	4.500	0	0.237	0.237	0.000	0.000	0.000	0.00	90	0.00	A216/WCBWCB/	0.00	0.00	0.00	100	400	50	250	0.000	0.000	0.16800	0.00000	0.00000
HD-4.3A-01R	7	4.500	40	0.237	0.000	0.000	3.500	0.216	0.00	90	0.00	A234/WPBWPB/	0.00	0.00	0.00	100	400	50	250	0.000	0.000	0.16800	0.16800	0.00000
HD-05.1A-01V	24	3.500	0	0.216	0.216	0.000	0.000	0.000	0.00	90	0.00	A216/WCBWCB/	0.00	0.00	0.00	100	400	13	0	221.300	0.000	0.16800	0.00000	0.00000
HD-05.1A-02R	18	6.625	40	0.280	0.000	0.000	3.500	0.216	0.00	90	0.00	A234/WPBWPB/	0.00	0.00	0.00	100	400	13	0	221.300	0.000	0.16800	0.16800	0.00000
HD-05.2A-01T	13	6.625	0	0.280	0.280	0.000	6.625	0.280	0.00	90	0.00	A234/WPBWPB/	0.00	0.00	0.00	100	400	13	0	221.300	0.000	0.16800	0.00000	0.16800
HD-05.2A-02P	63	6.625	0	0.280	0.280	0.000	0.000	0.000	0.00	0	30.00	A53/BS/	0.00	0.00	0.00	100	400	13	0	221.300	0.000	0.16800	0.00000	0.00000
HD-05.2A-03E	1	6.625	0	0.280	0.280	0.000	0.000	0.000	1.50	90	0.00	A234/WPBWPB/	0.00	0.00	0.00	100	400	13	0	221.399	0.000	0.16800	0.00000	0.00000
HD-05.2A-04E	4	6.625	0	0.280	0.280	0.000	0.000	0.000	1.00	90	0.00	A234/WPBWPB/	0.00	0.00	0.00	100	400	13	0	221.300	0.000	0.16800	0.00000	0.00000
HD-05.2A-05P	54	6.625	0	0.280	0.280	0.000	0.000	0.000	0.00	90	12.00	A53/BS/	0.00	0.00	0.00	100	400	13	0	221.300	0.000	0.16800	0.00000	0.00000
HD-05.2A-06N	30	6.625	0	0.280	0.280	0.000	0.000	0.000	0.00	90	0.00	A53/BS/	0.00	0.00	0.00	100	400	13	0	221.300	0.000	0.16800	0.00000	0.00000
Line Name : HD-04.1B FWH 34B to FWH 33B																								
HD-4.1B-01N	31	6.625	0	0.280	0.280	0.000	0.000	0.000	0.00	90	0.00	A53/BS/	0.00	0.00	0.00	100	400	50	250	0.000	0.000	0.16800	0.00000	0.00000
HD-4.1B-02P	61	6.625	0	0.280	0.280	0.000	0.000	0.000	0.00	180	56.00	A53/BS/	0.00	0.00	0.00	100	400	50	250	0.000	0.000	0.16800	0.00000	0.00000
HD-4.1B-03E	1	6.625	0	0.280	0.280	0.000	0.000	0.000	1.50	90	0.00	A234/WPBWPB/	0.00	0.00	0.00	100	400	50	250	0.000	0.000	0.16800	0.00000	0.00000
HD-4.1B-04P	51	6.625	0	0.280	0.280	0.000	0.000	0.000	0.00	135	13.00	A53/BS/	0.00	0.00	0.00	100	400	50	250	0.000	0.000	0.16800	0.00000	0.00000
HD-4.1B-06P	60	6.625	0	0.280	0.280	0.000	0.000	0.000	0.00	90	60.00	A53/BS/	0.00	0.00	0.00	100	400	50	250	0.000	0.000	0.16800	0.00000	0.00000
HD-4.1B-07E	2	6.625	0	0.280	0.280	0.000	0.000	0.000	1.50	90	0.00	A234/WPBWPB/	0.00	0.00	0.00	100	400	50	250	0.000	0.000	0.16800	0.00000	0.00000
HD-4.1B-08P	52	6.625	0	0.280	0.280	0.000	0.000	0.000	0.00	180	30.00	A53/BS/	0.00	0.00	0.00	100	400	50	250	0.000	0.000	0.16800	0.00000	0.00000

Component Name	Geom Code	Pipe Size OD (in)	Sch.	Tnom (in)	Tinit (in)	Tcrit (in)	Br/Small End OD (in)	Br/Small Tnom (in)	R / D Ratio	Orient Angle (Deg.)	Pipe Length (in)	Spec/Type/ Class	Material Cr. (%)	Cu. (%)	Mo. (%)	Design Press. (psig)	Design Temp. (Deg. F)	Op. Press. (psig)	Op. Temp. (Deg. F)	Op. Enth. (Btu/lbm)	Op. Qual.	Flow Rate U/S Mn. (Mlbm/hr)	D/S Mn. (Mlbm/hr)	Br.
HD-4.1B-09E	2	6.625	0	0.280	0.280	0.000	0.000	0.000	1.50	90	0.00	A234/WPBWPB/	0.00	0.00	0.00	100	400	50	250	0.000	0.000	0.16800	0.00000	0.00000
HD-4.1B-10E	3	6.625	0	0.280	0.280	0.000	0.000	0.000	1.50	90	0.00	A234/WPBWPB/	0.00	0.00	0.00	100	400	50	250	0.000	0.000	0.16800	0.00000	0.00000
HD-4.1B-11P_1	53	6.625	0	0.280	0.280	0.000	0.000	0.000	0.00	90	99.38	A53/BS/	0.00	0.00	0.00	100	400	50	250	0.000	0.000	0.16800	0.00000	0.00000
HD-4.1B-11P_2	9	6.625	0	0.280	0.280	0.000	0.000	0.000	0.00	90	833.63	A53/BS/	0.00	0.00	0.00	100	400	50	250	0.000	0.000	0.16800	0.00000	0.00000
HD-4.1B-12E	2	6.625	0	0.280	0.280	0.000	0.000	0.000	1.50	90	0.00	A234/WPBWPB/	0.00	0.00	0.00	100	400	50	250	0.000	0.000	0.16800	0.00000	0.00000
HD-4.1B-13P	52	6.625	0	0.280	0.280	0.000	0.000	0.000	0.00	0	30.00	A53/BS/	0.00	0.00	0.00	100	400	50	250	0.000	0.000	0.16800	0.00000	0.00000
HD-4.1B-14E	2	6.625	0	0.280	0.280	0.000	0.000	0.000	1.50	90	0.00	A234/WPBWPB/	0.00	0.00	0.00	100	400	50	250	0.000	0.000	0.16800	0.00000	0.00000
HD-4.1B-15P	52	6.625	0	0.280	0.280	0.000	0.000	0.000	0.00	90	18.00	A53/BS/	0.00	0.00	0.00	100	400	50	250	0.000	0.000	0.16800	0.00000	0.00000
HD-4.1B-16E	2	6.625	0	0.280	0.280	0.000	0.000	0.000	1.50	90	0.00	A234/WPBWPB/	0.00	0.00	0.00	100	400	50	250	0.000	0.000	0.16800	0.00000	0.00000
HD-4.1B-17P	52	6.625	0	0.280	0.280	0.000	0.000	0.000	0.00	0	57.00	A53/BS/	0.00	0.00	0.00	100	400	50	250	0.000	0.000	0.16800	0.00000	0.00000
HD-4.2B-01E	16	6.625	40	0.280	0.000	0.000	4.500	0.237	1.50	90	0.00	A234/WPBWPB/	0.00	0.00	0.00	100	400	50	250	0.000	0.000	0.16800	0.16800	0.00000
HD-4.2B-02V	22	4.500	0	0.237	0.237	0.000	0.000	0.000	0.00	90	0.00	A216/WCBWCB/	0.00	0.00	0.00	100	400	50	250	0.000	0.000	0.16800	0.00000	0.00000
HD-4.3B-01R	7	4.500	40	0.237	0.000	0.000	3.500	0.216	0.00	90	0.00	A234/WPBWPB/	0.00	0.00	0.00	100	400	50	250	0.000	0.000	0.16800	0.16800	0.00000
HD-05.1B-01V	24	3.500	0	0.216	0.216	0.000	0.000	0.000	0.00	90	0.00	A216/WCBWCB/	0.00	0.00	0.00	100	400	13	0	221.300	0.000	0.16800	0.00000	0.00000
HD-05.1B-02R	18	6.625	40	0.280	0.000	0.000	3.500	0.216	0.00	90	0.00	A234/WPBWPB/	0.00	0.00	0.00	100	400	13	0	221.300	0.000	0.16800	0.16800	0.00000
HD-05.2B-01T	13	6.625	0	0.280	0.280	0.000	6.625	0.280	0.00	90	0.00	A234/WPBWPB/	0.00	0.00	0.00	100	400	13	0	221.300	0.000	0.16800	0.00000	0.16800
HD-05.2B-02P	63	6.625	0	0.280	0.280	0.000	0.000	0.000	0.00	0	30.00	A53/BS/	0.00	0.00	0.00	100	400	13	0	221.300	0.000	0.16800	0.00000	0.00000
HD-05.2B-03E	1	6.625	0	0.280	0.280	0.000	0.000	0.000	1.50	90	0.00	A234/WPBWPB/	0.00	0.00	0.00	100	400	13	0	221.300	0.000	0.16800	0.00000	0.00000
HD-05.2B-04E	4	6.625	0	0.280	0.280	0.000	0.000	0.000	1.00	90	0.00	A234/WPBWPB/	0.00	0.00	0.00	100	400	13	0	221.300	0.000	0.16800	0.00000	0.00000
HD-05.2B-05P	54	6.625	0	0.280	0.280	0.000	0.000	0.000	0.00	90	12.00	A53/BS/	0.00	0.00	0.00	100	400	13	0	221.300	0.000	0.16800	0.00000	0.00000
HD-05.2B-06N	30	6.625	0	0.280	0.280	0.000	0.000	0.000	0.00	90	0.00	A53/BS/	0.00	0.00	0.00	100	400	13	0	221.300	0.000	0.16800	0.00000	0.00000
Line Name : HD-04.1C FWH 34C to FWH 33C																								
HD-4.1C-01N	31	6.625	0	0.280	0.280	0.000	0.000	0.000	0.00	90	0.00	A53/BS/	0.00	0.00	0.00	100	400	50	250	0.000	0.000	0.16800	0.00000	0.00000
HD-4.1C-02P	61	6.625	0	0.280	0.280	0.000	0.000	0.000	0.00	180	34.00	A53/BS/	0.00	0.00	0.00	100	400	50	250	0.000	0.000	0.16800	0.00000	0.00000
HD-4.1C-03E	2	6.625	0	0.280	0.280	0.000	0.000	0.000	1.50	90	0.00	A234/WPBWPB/	0.00	0.00	0.00	100	400	50	250	0.000	0.000	0.16800	0.00000	0.00000
HD-4.1C-04P	52	6.625	0	0.280	0.280	0.000	0.000	0.000	0.00	90	9.00	A53/BS/	0.00	0.00	0.00	100	400	50	250	0.000	0.000	0.16800	0.00000	0.00000
HD-4.1C-05E	2	6.625	0	0.280	0.280	0.000	0.000	0.000	1.50	90	0.00	A234/WPBWPB/	0.00	0.00	0.00	100	400	50	250	0.000	0.000	0.16800	0.00000	0.00000
HD-4.1C-06T	15	6.625	0	0.280	0.280	0.000	6.625	0.280	0.00	180	0.00	A234/WPBWPB/	0.00	0.00	0.00	100	400	50	250	0.000	0.000	0.16800	0.16800	0.00000
HD-4.1C-07P	65	6.625	0	0.280	0.280	0.000	0.000	0.000	0.00	180	4.00	A53/BS/	0.00	0.00	0.00	100	400	50	250	0.000	0.000	0.16800	0.00000	0.00000
HD-4.1C-08E	4	6.625	0	0.280	0.280	0.000	0.000	0.000	1.50	90	0.00	A234/WPBWPB/	0.00	0.00	0.00	100	400	50	250	0.000	0.000	0.16800	0.00000	0.00000
HD-4.1C-09P	54	6.625	0	0.280	0.280	0.000	0.000	0.000	0.00	90	87.00	A53/BS/	0.00	0.00	0.00	100	400	50	250	0.000	0.000	0.16800	0.00000	0.00000
HD-4.1C-10E	2	6.625	0	0.280	0.280	0.000	0.000	0.000	1.50	90	0.00	A234/WPBWPB/	0.00	0.00	0.00	100	400	50	250	0.000	0.000	0.16800	0.00000	0.00000
HD-4.1C-11P	52	6.625	0	0.280	0.280	0.000	0.000	0.000	0.00	180	30.00	A53/BS/	0.00	0.00	0.00	100	400	50	250	0.000	0.000	0.16800	0.00000	0.00000
HD-4.1C-12E	2	6.625	0	0.280	0.280	0.000	0.000	0.000	1.50	90	0.00	A234/WPBWPB/	0.00	0.00	0.00	100	400	50	250	0.000	0.000	0.16800	0.00000	0.00000
HD-4.1C-13P_1	52	6.625	0	0.280	0.280	0.000	0.000	0.000	0.00	90	99.38	A53/BS/	0.00	0.00	0.00	100	400	50	250	0.000	0.000	0.16800	0.00000	0.00000
HD-4.1C-13P_2	9	6.625	0	0.280	0.280	0.000	0.000	0.000	0.00	90	272.63	A53/BS/	0.00	0.00	0.00	100	400	50	250	0.000	0.000	0.16800	0.00000	0.00000
HD-4.1C-14E	2	6.625	0	0.280	0.280	0.000	0.000	0.000	1.50	90	0.00	A234/WPBWPB/	0.00	0.00	0.00	100	400	50	250	0.000	0.000	0.16800	0.00000	0.00000
HD-4.1C-15P	52	6.625	0	0.280	0.280	0.000	0.000	0.000	0.00	90	12.00	A53/BS/	0.00	0.00	0.00	100	400	50	250	0.000	0.000	0.16800	0.00000	0.00000
HD-4.1C-16E	2	6.625	0	0.280	0.280	0.000	0.000	0.000	1.50	90	0.00	A234/WPBWPB/	0.00	0.00	0.00	100	400	50	250	0.000	0.000	0.16800	0.00000	0.00000
HD-4.1C-17P_1	52	6.625	0	0.280	0.280	0.000	0.000	0.000	0.00	90	99.38	A53/BS/	0.00	0.00	0.00	100	400	50	250	0.000	0.000	0.16800	0.00000	0.00000
HD-4.1C-17P_2	9	6.625	0	0.280	0.280	0.000	0.000	0.000	0.00	90	511.63	A53/BS/	0.00	0.00	0.00	100	400	50	250	0.000	0.000	0.16800	0.00000	0.00000
HD-4.1C-18E	2	6.625	0	0.280	0.280	0.000	0.000	0.000	1.50	90	0.00	A234/WPBWPB/	0.00	0.00	0.00	100	400	50	250	0.000	0.000	0.16800	0.00000	0.00000
HD-4.1C-19P	52	6.625	0	0.280	0.280	0.000	0.000	0.000	0.00	0	30.00	A53/BS/	0.00	0.00	0.00	100	400	50	250	0.000	0.000	0.16800	0.00000	0.00000
HD-4.1C-20E	2	6.625	0	0.280	0.280	0.000	0.000	0.000	1.50	90	0.00	A234/WPBWPB/	0.00	0.00	0.00	100	400	50	250	0.000	0.000	0.16800	0.00000	0.00000
HD-4.1C-21P	52	6.625	0	0.280	0.280	0.000	0.000	0.000	0.00	90	9.00	A53/BS/	0.00	0.00	0.00	100	400	50	250	0.000	0.000	0.16800	0.00000	0.00000
HD-4.1C-22E	2	6.625	0	0.280	0.280	0.000	0.000	0.000	1.50	90	0.00	A234/WPBWPB/	0.00	0.00	0.00	100	400	50	250	0.000	0.000	0.16800	0.00000	0.00000
HD-4.1C-23P	52	6.625	0	0.280	0.280	0.000	0.000	0.000	0.00	0	57.00	A53/BS/	0.00	0.00	0.00	100	400	50	250	0.000	0.000	0.16800	0.00000	0.00000
HD-4.2C-01E	16	6.625	40	0.280	0.000	0.000	4.500	0.237	1.50	90	0.00	A234/WPBWPB/	0.00	0.00	0.00	100	400	50	250	0.000	0.000	0.16800	0.16800	0.00000
HD-4.2C-02V	22	4.500	0	0.237	0.237	0.000	0.000	0.000	0.00	90	0.00	A216/WCBWCB/	0.00	0.00	0.00	100	400	50	250	0.000	0.000	0.16800	0.00000	0.00000
HD-4.3C-01R	7	4.500	40	0.237	0.000	0.000	3.500	0.216	0.00	90	0.00	A234/WPBWPB/	0.00	0.00	0.00	100	400	50	250	0.000	0.000	0.16800	0.16800	0.00000
HD-05.1C-01V	24	3.500	0	0.216	0.216	0.000	0.000	0.000	0.00	90	0.00	A216/WCBWCB/	0.00	0.00	0.00	100	400	13	0	221.300	0.000	0.16800	0.00000	0.00000
HD-05.1C-02R	18	6.625	40	0.280	0.000	0.000	3.500	0.216	0.00	90	0.00	A234/WPBWPB/	0.00	0.00	0.00	100	400	13	0	221.300	0.000	0.16800	0.16800	0.00000
HD-05.2C-01T	13	6.625	0	0.280	0.280	0.000	6.625	0.280	0.00	90	0.00	A234/WPBWPB/	0.00	0.00	0.00	100	400	13	0	221.300	0.000	0.16800	0.00000	0.16800
HD-05.2C-02P	63	6.625	0	0.280	0.280	0.000	0.000	0.000	0.00	0	30.00	A53/BS/	0.00	0.00	0.00	100	400	13	0	221.300	0.000	0.16800	0.00000	0.00000
HD-05.2C-03E	1	6.625	0	0.280	0.280	0.000	0.000	0.000	1.50	90	0.00	A234/WPBWPB/	0.00	0.00	0.00	100	400	13	0	221.300	0.000	0.16800	0.00000	0.00000
HD-05.2C-04E	4	6.625	0	0.280	0.280	0.000	0.000	0.000	1.00	90	0.00	A234/WPBWPB/	0.00	0.00	0.00	100	400	13	0	221.300	0.000	0.16800	0.00000	0.00000
HD-05.2C-05P	54	6.625	0	0.280	0.280	0.000	0.000	0.000	0.00	90	12.00	A53/BS/	0.00	0.00	0.00	100	400	13	0	221.300	0.000	0.16800	0.00000	0.00000
HD-05.2C-06N	30	6.625	0	0.280	0.280	0.000	0.000	0.000	0.00	90	0.00	A53/BS/	0.00	0.00	0.00	100	400	13	0	221.399	0.000	0.16800	0.00000	0.00000
Line Name : HD-06.1A FWH 33A to FWH 32A																								
HD-6.1A-01N	31	8.625	0	0.250	0.250	0.000	0.000	0.000	0.00	90	0.00	A53/BS/	0.00	0.00	0.00	50	300	13	197	0.000	0.000	0.32600	0.00000	0.00000
HD-6.1A-02P	61	8.625	0	0.250	0.250	0.000	0.000	0.000	0.00	180	63.00	A53/BS/	0.00	0.00	0.00	50	300	13	197	0.000	0.000	0.32600	0.00000	0.00000

Component Name	Geom Code	Pipe Size OD (in)	Sch.	Tnom (in)	Tinit (in)	Tcrit (in)	Br/Small End OD (in)	Br/Small Tnom (in)	R / D Ratio	Orient Angle (Deg.)	Pipe Length (in)	Spec/Type/ Class	Material Cr. (%)	Cu. (%)	Mo. (%)	Design Press. (psig)	Design Temp. (Deg. F)	Op. Press. (psig)	Op. Temp. (Deg. F)	Op. Enth. (Btu/lbm)	Op. Qual.	Flow Rate U/S Mn. (Mlbm/hr)	D/S Mn. (Mlbm/hr)	Br.
HD-6.1A-03E	2	8.625	0	0.250	0.250	0.000	0.000	0.000	1.50	90	0.00	A234/WPBWPB/	0.00	0.00	0.00	50	300	13	197	0.000	0.000	0.32600	0.00000	0.00000
HD-6.1A-04P	52	8.625	0	0.250	0.250	0.000	0.000	0.000	0.00	90	24.00	A53/BS/	0.00	0.00	0.00	50	300	13	197	0.000	0.000	0.32600	0.00000	0.00000
HD-6.1A-05E	2	8.625	0	0.250	0.250	0.000	0.000	0.000	1.50	90	0.00	A234/WPBWPB/	0.00	0.00	0.00	50	300	13	197	0.000	0.000	0.32600	0.00000	0.00000
HD-6.1A-06P_1	52	8.625	0	0.250	0.250	0.000	0.000	0.000	0.00	90	129.38	A53/BS/	0.00	0.00	0.00	50	300	13	197	0.000	0.000	0.32600	0.00000	0.00000
HD-6.1A-06P_2	9	8.625	0	0.250	0.250	0.000	0.000	0.000	0.00	90	246.63	A53/BS/	0.00	0.00	0.00	50	300	13	197	0.000	0.000	0.32600	0.00000	0.00000
HD-6.1A-07E	2	8.625	0	0.250	0.250	0.000	0.000	0.000	1.00	90	0.00	A234/WPBWPB/	0.00	0.00	0.00	50	300	13	197	0.000	0.000	0.32600	0.00000	0.00000
HD-6.1A-08P	52	8.625	0	0.250	0.250	0.000	0.000	0.000	0.00	180	5.00	A53/BS/	0.00	0.00	0.00	50	300	13	197	0.000	0.000	0.32600	0.00000	0.00000
HD-6.1A-09E	4	8.625	0	0.250	0.250	0.000	0.000	0.000	1.00	90	0.00	A234/WPBWPB/	0.00	0.00	0.00	50	300	13	197	0.000	0.000	0.32600	0.00000	0.00000
HD-6.1A-10P	54	8.625	0	0.250	0.250	0.000	0.000	0.000	0.00	90	10.00	A53/BS/	0.00	0.00	0.00	50	300	13	197	0.000	0.000	0.32600	0.00000	0.00000
HD-6.1A-11E	2	8.625	0	0.250	0.250	0.000	0.000	0.000	1.50	90	0.00	A234/WPBWPB/	0.00	0.00	0.00	50	300	13	197	0.000	0.000	0.32600	0.00000	0.00000
HD-6.1A-12P_1	52	8.625	0	0.250	0.250	0.000	0.000	0.000	0.00	90	129.38	A53/BS/	0.00	0.00	0.00	50	300	13	197	0.000	0.000	0.32600	0.00000	0.00000
HD-6.1A-12P_2	9	8.625	0	0.250	0.250	0.000	0.000	0.000	0.00	90	119.63	A53/BS/	0.00	0.00	0.00	50	300	13	197	0.000	0.000	0.32600	0.00000	0.00000
HD-6.1A-13E	2	8.625	0	0.250	0.250	0.000	0.000	0.000	1.00	90	0.00	A234/WPBWPB/	0.00	0.00	0.00	50	300	13	197	0.000	0.000	0.32600	0.00000	0.00000
HD-6.1A-43P	52	8.625	0	0.250	0.250	0.000	0.000	0.000	0.00	90	2.00	A53/BS/	0.00	0.00	0.00	50	300	13	197	0.000	0.000	0.32600	0.00000	0.00000
HD-6.1A-14E	4	8.625	0	0.250	0.250	0.000	0.000	0.000	1.00	90	0.00	A234/WPBWPB/	0.00	0.00	0.00	50	300	13	197	0.000	0.000	0.32600	0.00000	0.00000
HD-6.1A-15P	54	8.625	0	0.250	0.250	0.000	0.000	0.000	0.00	180	11.00	A53/BS/	0.00	0.00	0.00	50	300	13	197	0.000	0.000	0.32600	0.00000	0.00000
HD-6.1A-16E	2	8.625	0	0.250	0.250	0.000	0.000	0.000	1.00	90	0.00	A234/WPBWPB/	0.00	0.00	0.00	50	300	13	197	0.000	0.000	0.32600	0.00000	0.00000
HD-6.1A-17P_1	52	8.625	0	0.250	0.250	0.000	0.000	0.000	0.00	90	129.38	A53/BS/	0.00	0.00	0.00	50	300	13	197	0.000	0.000	0.32600	0.00000	0.00000
HD-6.1A-17P_2	9	8.625	0	0.250	0.250	0.000	0.000	0.000	0.00	90	372.63	A53/BS/	0.00	0.00	0.00	50	300	13	197	0.000	0.000	0.32600	0.00000	0.00000
HD-6.1A-18E	2	8.625	0	0.250	0.250	0.000	0.000	0.000	1.50	90	0.00	A234/WPBWPB/	0.00	0.00	0.00	50	300	13	197	0.000	0.000	0.32600	0.00000	0.00000
HD-6.1A-19P	52	8.625	0	0.250	0.250	0.000	0.000	0.000	0.00	180	18.00	A53/BS/	0.00	0.00	0.00	50	300	13	197	0.000	0.000	0.32600	0.00000	0.00000
HD-6.1A-20E	2	8.625	0	0.250	0.250	0.000	0.000	0.000	1.50	90	0.00	A234/WPBWPB/	0.00	0.00	0.00	50	300	13	197	0.000	0.000	0.32600	0.00000	0.00000
HD-6.1A-21P_1	52	8.625	0	0.250	0.250	0.000	0.000	0.000	0.00	90	129.38	A53/BS/	0.00	0.00	0.00	50	300	13	197	0.000	0.000	0.32600	0.00000	0.00000
HD-6.1A-21P_2	9	8.625	0	0.250	0.250	0.000	0.000	0.000	0.00	90	41.63	A53/BS/	0.00	0.00	0.00	50	300	13	197	0.000	0.000	0.32600	0.00000	0.00000
HD-6.1A-22E	2	8.625	0	0.250	0.250	0.000	0.000	0.000	1.50	90	0.00	A234/WPBWPB/	0.00	0.00	0.00	50	300	13	197	0.000	0.000	0.32600	0.00000	0.00000
HD-6.1A-23P	52	8.625	0	0.250	0.250	0.000	0.000	0.000	0.00	90	114.00	A53/BS/	0.00	0.00	0.00	50	300	13	197	0.000	0.000	0.32600	0.00000	0.00000
HD-6.1A-24E	2	8.625	0	0.250	0.250	0.000	0.000	0.000	1.50	90	0.00	A234/WPBWPB/	0.00	0.00	0.00	50	300	13	197	0.000	0.000	0.32600	0.00000	0.00000
HD-6.1A-25P_1	52	8.625	0	0.250	0.250	0.000	0.000	0.000	0.00	90	129.38	A53/BS/	0.00	0.00	0.00	50	300	13	197	0.000	0.000	0.32600	0.00000	0.00000
HD-6.1A-25P_2	9	8.625	0	0.250	0.250	0.000	0.000	0.000	0.00	90	70.63	A53/BS/	0.00	0.00	0.00	50	300	13	197	0.000	0.000	0.32600	0.00000	0.00000
HD-6.1A-26E	2	8.625	0	0.250	0.250	0.000	0.000	0.000	1.50	90	0.00	A234/WPBWPB/	0.00	0.00	0.00	50	300	13	197	0.000	0.000	0.32600	0.00000	0.00000
HD-6.1A-27P	52	8.625	0	0.250	0.250	0.000	0.000	0.000	0.00	90	110.00	A53/BS/	0.00	0.00	0.00	50	300	13	197	0.000	0.000	0.32600	0.00000	0.00000
HD-6.1A-28T	15	8.625	0	0.250	0.250	0.000	8.625	0.250	0.00	90	0.00	A234/WPBWPB/	0.00	0.00	0.00	50	300	13	197	0.000	0.000	0.32600	0.32600	0.00000
HD-6.1A-29P	65	8.625	0	0.250	0.250	0.000	0.000	0.000	0.00	90	101.00	A53/BS/	0.00	0.00	0.00	50	300	13	197	0.000	0.000	0.32600	0.00000	0.00000
HD-6.1A-44T	15	8.625	0	0.250	0.250	0.000	8.625	0.250	0.00	90	0.00	A234/WPBWPB/	0.00	0.00	0.00	50	300	13	197	0.000	0.000	0.32600	0.32600	0.00000
HD-6.1A-30E	2	8.625	0	0.250	0.250	0.000	0.000	0.000	1.50	90	0.00	A234/WPBWPB/	0.00	0.00	0.00	50	300	13	197	0.000	0.000	0.32600	0.00000	0.00000
HD-6.1A-31P	52	8.625	0	0.250	0.250	0.000	0.000	0.000	0.00	0	115.00	A53/BS/	0.00	0.00	0.00	50	300	13	197	0.000	0.000	0.32600	0.00000	0.00000
HD-6.1A-32E	2	8.625	0	0.250	0.250	0.000	0.000	0.000	1.50	90	0.00	A234/WPBWPB/	0.00	0.00	0.00	50	300	13	197	0.000	0.000	0.32600	0.00000	0.00000
HD-6.1A-33P	52	8.625	0	0.250	0.250	0.000	0.000	0.000	0.00	90	60.00	A53/BS/	0.00	0.00	0.00	50	300	13	197	0.000	0.000	0.32600	0.00000	0.00000
HD-6.1A-34E	2	8.625	0	0.250	0.250	0.000	0.000	0.000	1.00	90	0.00	A234/WPBWPB/	0.00	0.00	0.00	50	300	13	197	0.000	0.000	0.32600	0.00000	0.00000
HD-6.1A-37E	3	8.625	0	0.250	0.250	0.000	0.000	0.000	1.50	90	0.00	A234/WPBWPB/	0.00	0.00	0.00	50	300	13	197	0.000	0.000	0.32600	0.00000	0.00000
HD-6.1A-38P	53	8.625	0	0.250	0.250	0.000	0.000	0.000	0.00	45	19.00	A53/BS/	0.00	0.00	0.00	50	300	13	197	0.000	0.000	0.32600	0.00000	0.00000
HD-6.1A-39E	1	8.625	0	0.250	0.250	0.000	0.000	0.000	1.50	90	0.00	A234/WPBWPB/	0.00	0.00	0.00	50	300	13	197	0.000	0.000	0.32600	0.00000	0.00000
HD-6.1A-40P	51	8.625	0	0.250	0.250	0.000	0.000	0.000	0.00	90	7.00	A53/BS/	0.00	0.00	0.00	50	300	13	197	0.000	0.000	0.32600	0.00000	0.00000
HD-6.1A-41E	4	8.625	0	0.250	0.250	0.000	0.000	0.000	1.50	90	0.00	A234/WPBWPB/	0.00	0.00	0.00	50	300	13	197	0.000	0.000	0.32600	0.00000	0.00000
HD-6.1A-42P	54	8.625	0	0.250	0.250	0.000	0.000	0.000	0.00	16	19.00	A53/BS/	0.00	0.00	0.00	50	300	13	197	0.000	0.000	0.32600	0.00000	0.00000
HD-6.2A-01E	16	8.625	20	0.250	0.000	0.000	6.625	0.280	1.50	90	0.00	A234/WPBWPB/	0.00	0.00	0.00	50	300	13	197	0.000	0.000	0.32600	0.32600	0.00000
HD-07.1A-01V	24	6.625	0	0.280	0.280	0.000	0.000	0.000	0.00	0	0.00	A216/WCBWCB/	0.00	0.00	0.00	50	300	-4	0	170.199	0.000	0.32600	0.00000	0.00000
HD-07.1A 02R	18	8.625	20	0.250	0.000	0.000	6.625	0.280	0.00	90	0.00	A234/WPBWPB/	0.00	0.00	0.00	50	300	-4	0	170.199	0.000	0.32600	0.32600	0.00000
HD-07.2A-01V	22	8.625	0	0.250	0.250	0.000	0.000	0.000	0.00	90	0.00	A216/WCBWCB/	0.00	0.00	0.00	50	300	-4	0	170.199	0.000	0.32600	0.00000	0.00000
HD-07.2A-02P	58	8.625	0	0.250	0.250	0.000	0.000	0.000	0.00	90	44.00	A53/BS/	0.00	0.00	0.00	50	300	-4	0	170.199	0.000	0.32600	0.00000	0.00000
HD-07.2A-03T	13	8.625	0	0.250	0.250	0.000	8.625	0.250	0.00	90	0.00	A234/WPBWPB/	0.00	0.00	0.00	50	300	-4	0	170.199	0.000	0.32600	0.00000	0.32600
HD-07.2A-04P	63	8.625	0	0.250	0.250	0.000	0.000	0.000	0.00	93	45.00	A53/BS/	0.00	0.00	0.00	50	300	-4	0	170.199	0.000	0.32600	0.00000	0.00000
HD-07.2A-05R	18	10.750	20	0.250	0.000	0.000	8.625	0.250	0.00	93	0.00	A234/WPBWPB/	0.00	0.00	0.00	50	300	-4	0	170.199	0.000	0.32600	0.32600	0.00000
HD-07.3A-01N	30	10.750	20	0.250	0.365	0.000	0.000	0.000	0.00	90	0.00	A53/BS/	0.00	0.00	0.00	50	300	-4	0	170.199	0.000	0.32600	0.00000	0.00000
Line Name : HD-06.1B FWH 33B to FWH 32B																								
HD-6.1B-01N	31	8.625	0	0.250	0.250	0.000	0.000	0.000	0.00	90	0.00	A53/BS/	0.00	0.00	0.00	50	300	13	197	0.000	0.000	0.32600	0.00000	0.00000
HD-6.1B-02P	61	8.625	0	0.250	0.250	0.000	0.000	0.000	0.00	180	63.00	A53/BS/	0.00	0.00	0.00	50	300	13	197	0.000	0.000	0.32600	0.00000	0.00000
HD-6.1B-03E	2	8.625	0	0.250	0.250	0.000	0.000	0.000	1.50	90	0.00	A234/WPBWPB/	0.00	0.00	0.00	50	300	13	197	0.000	0.000	0.32600	0.00000	0.00000
HD-6.1B-04E	4	8.625	0	0.250	0.250	0.000	0.000	0.000	1.50	90	0.00	A234/WPBWPB/	0.00	0.00	0.00	50	300	13	197	0.000	0.000	0.32600	0.00000	0.00000
HD-6.1B-05P_1	54	8.625	0	0.250	0.250	0.000	0.000	0.000	0.00	90	129.38	A53/BS/	0.00	0.00	0.00	50	300	13	197	0.000	0.000	0.32600	0.00000	0.00000
HD-6.1B-05P_2	9	8.625	0	0.250	0.250	0.000	0.000	0.000	0.00	90	114.63	A53/BS/	0.00	0.00	0.00	50	300	13	197	0.000	0.000	0.32600	0.00000	0.00000
HD-6.1B-06E	2	8.625	0	0.250	0.250	0.000	0.000	0.000	1.00	90	0.00	A234/WPBWPB/	0.00	0.00	0.00	50	300	13	197	0.000	0.000	0.32600	0.00000	0.00000
HD-6.1B-07P	52	8.625	0	0.250	0.250	0.000	0.000	0.000	0.00	180	5.00	A53/BS/	0.00	0.00	0.00	50	300	13	197	0.000	0.000	0.32600	0.00000	0.00000

Component Name	Geom Code	Pipe Size OD (in)	Sch.	Tnom (in)	Tinit (in)	Tcrit (in)	Br/Small End OD (in)	Br/Small Tnom (in)	R / D Ratio	Orient Angle (Deg.)	Pipe Length (in)	Spec/Type/ Class	Material Cr. (%)	Cu. (%)	Mo. (%)	Design Press. (psig)	Design Temp. (Deg. F)	Op. Press. (psig)	Op. Temp. (Deg. F)	Op. Enth. (Btu/lbm)	Op. Qual.	Flow Rate U/S Mn. (Mlbm/hr)	D/S Mn. (Mlbm/hr)	Br.
HD-6.1B-08E	4	8.625	0	0.250	0.250	0.000	0.000	0.000	1.00	90	0.00	A234/WPBWPB/	0.00	0.00	0.00	50	300	13	197	0.000	0.000	0.32600	0.00000	0.00000
HD-6.1B-09P	54	8.625	0	0.250	0.250	0.000	0.000	0.000	0.00	90	8.00	A53/BS/	0.00	0.00	0.00	50	300	13	197	0.000	0.000	0.32600	0.00000	0.00000
HD-6.1B-10E	3	8.625	0	0.250	0.250	0.000	0.000	0.000	1.50	90	0.00	A234/WPBWPB/	0.00	0.00	0.00	50	300	13	197	0.000	0.000	0.32600	0.00000	0.00000
HD-6.1B-11P_1	53	8.625	0	0.250	0.250	0.000	0.000	0.000	0.00	90	129.38	A53/BS/	0.00	0.00	0.00	50	300	13	197	0.000	0.000	0.32600	0.00000	0.00000
HD-6.1B-11P_2	9	8.625	0	0.250	0.250	0.000	0.000	0.000	0.00	90	89.63	A53/BS/	0.00	0.00	0.00	50	300	13	197	0.000	0.000	0.32600	0.00000	0.00000
HD-6.1B-12E	2	8.625	0	0.250	0.250	0.000	0.000	0.000	1.00	90	0.00	A234/WPBWPB/	0.00	0.00	0.00	50	300	13	197	0.000	0.000	0.32600	0.00000	0.00000
HD-6.1B-13E	4	8.625	0	0.250	0.250	0.000	0.000	0.000	1.00	90	0.00	A234/WPBWPB/	0.00	0.00	0.00	50	300	13	197	0.000	0.000	0.32600	0.00000	0.00000
HD-6.1B-14P	54	8.625	0	0.250	0.250	0.000	0.000	0.000	0.00	180	5.00	A53/BS/	0.00	0.00	0.00	50	300	13	197	0.000	0.000	0.32600	0.00000	0.00000
HD-6.1B-15E	4	8.625	0	0.250	0.250	0.000	0.000	0.000	1.00	90	0.00	A234/WPBWPB/	0.00	0.00	0.00	50	300	13	197	0.000	0.000	0.32600	0.00000	0.00000
HD-6.1B-16P_1	54	8.625	0	0.250	0.250	0.000	0.000	0.000	0.00	90	129.38	A53/BS/	0.00	0.00	0.00	50	300	13	197	0.000	0.000	0.32600	0.00000	0.00000
HD-6.1B-16P_2	9	8.625	0	0.250	0.250	0.000	0.000	0.000	0.00	90	355.63	A53/BS/	0.00	0.00	0.00	50	300	13	197	0.000	0.000	0.32600	0.00000	0.00000
HD-6.1B-17E	2	8.625	0	0.250	0.250	0.000	0.000	0.000	1.50	90	0.00	A234/WPBWPB/	0.00	0.00	0.00	50	300	13	197	0.000	0.000	0.32600	0.00000	0.00000
HD-6.1B-18P	52	8.625	0	0.250	0.250	0.000	0.000	0.000	0.00	90	44.00	A53/BS/	0.00	0.00	0.00	50	300	13	197	0.000	0.000	0.32600	0.00000	0.00000
HD-6.1B-19E	2	8.625	0	0.250	0.250	0.000	0.000	0.000	1.50	90	0.00	A234/WPBWPB/	0.00	0.00	0.00	50	300	13	197	0.000	0.000	0.32600	0.00000	0.00000
HD-6.1B-20P	52	8.625	0	0.250	0.250	0.000	0.000	0.000	0.00	180	18.00	A53/BS/	0.00	0.00	0.00	50	300	13	197	0.000	0.000	0.32600	0.00000	0.00000
HD-6.1B-21E	2	8.625	0	0.250	0.250	0.000	0.000	0.000	1.50	90	0.00	A234/WPBWPB/	0.00	0.00	0.00	50	300	13	197	0.000	0.000	0.32600	0.00000	0.00000
HD-6.1B-22P_1	52	8.625	0	0.250	0.250	0.000	0.000	0.000	0.00	90	129.38	A53/BS/	0.00	0.00	0.00	50	300	13	197	0.000	0.000	0.32600	0.00000	0.00000
HD-6.1B-22P_2	9	8.625	0	0.250	0.250	0.000	0.000	0.000	0.00	90	34.63	A53/BS/	0.00	0.00	0.00	50	300	13	197	0.000	0.000	0.32600	0.00000	0.00000
HD-6.1B-23T	15	8.625	0	0.250	0.250	0.000	8.625	0.250	0.00	90	0.00	A234/WPBWPB/	0.00	0.00	0.00	50	300	13	197	0.000	0.000	0.32600	0.32600	0.00000
HD-6.1B-24P	65	8.625	0	0.250	0.250	0.000	0.000	0.000	0.00	90	101.00	A53/BS/	0.00	0.00	0.00	50	300	13	197	0.000	0.000	0.32600	0.00000	0.00000
HD-6.1B-38T	15	8.625	0	0.250	0.250	0.000	8.625	0.250	0.00	90	0.00	A234/WPBWPB/	0.00	0.00	0.00	50	300	13	197	0.000	0.000	0.32600	0.32600	0.00000
HD-6.1B-25E	2	8.625	0	0.250	0.250	0.000	0.000	0.000	1.50	90	0.00	A234/WPBWPB/	0.00	0.00	0.00	50	300	13	197	0.000	0.000	0.32600	0.00000	0.00000
HD-6.1B-26P	52	8.625	0	0.250	0.250	0.000	0.000	0.000	0.00	0	115.00	A53/BS/	0.00	0.00	0.00	50	300	13	197	0.000	0.000	0.32600	0.00000	0.00000
HD-6.1B-27E	2	8.625	0	0.250	0.250	0.000	0.000	0.000	1.50	90	0.00	A234/WPBWPB/	0.00	0.00	0.00	50	300	13	197	0.000	0.000	0.32600	0.00000	0.00000
HD-6.1B-28P	52	8.625	0	0.250	0.250	0.000	0.000	0.000	0.00	90	60.00	A53/BS/	0.00	0.00	0.00	50	300	13	197	0.000	0.000	0.32600	0.00000	0.00000
HD-6.1B-29E	2	8.625	0	0.250	0.250	0.000	0.000	0.000	1.00	90	0.00	A234/WPBWPB/	0.00	0.00	0.00	50	300	13	197	0.000	0.000	0.32600	0.00000	0.00000
HD-6.1B-32E	3	8.625	0	0.250	0.250	0.000	0.000	0.000	1.50	90	0.00	A234/WPBWPB/	0.00	0.00	0.00	50	300	13	197	0.000	0.000	0.32600	0.00000	0.00000
HD-6.1B-33P	53	8.625	0	0.250	0.250	0.000	0.000	0.000	0.00	45	19.00	A53/BS/	0.00	0.00	0.00	50	300	13	197	0.000	0.000	0.32600	0.00000	0.00000
HD-6.1B-34E	1	8.625	0	0.250	0.250	0.000	0.000	0.000	1.50	90	0.00	A234/WPBWPB/	0.00	0.00	0.00	50	300	13	197	0.000	0.000	0.32600	0.00000	0.00000
HD-6.1B-35P	51	8.625	0	0.250	0.250	0.000	0.000	0.000	0.00	90	7.00	A53/BS/	0.00	0.00	0.00	50	300	13	197	0.000	0.000	0.32600	0.00000	0.00000
HD-6.1B-36E	4	8.625	0	0.250	0.250	0.000	0.000	0.000	1.50	90	0.00	A234/WPBWPB/	0.00	0.00	0.00	50	300	13	197	0.000	0.000	0.32600	0.00000	0.00000
HD-6.1B-37P	54	8.625	0	0.250	0.250	0.000	0.000	0.000	0.00	90	17.00	A53/BS/	0.00	0.00	0.00	50	300	13	197	0.000	0.000	0.32600	0.00000	0.00000
HD-6.2B-01E	16	8.625	20	0.250	0.000	0.000	6.625	0.280	1.50	90	0.00	A234/WPBWPB/	0.00	0.00	0.00	50	300	13	197	0.000	0.000	0.32600	0.32600	0.00000
HD-07.1B-01V	24	6.625	0	0.280	0.280	0.000	0.000	0.000	0.00	90	0.00	A216/WCBWCB/	0.00	0.00	0.00	50	300	-4	0	170.199	0.000	0.32600	0.00000	0.00000
HD-07.1B-02R	18	8.625	20	0.250	0.000	0.000	6.625	0.280	0.00	90	0.00	A234/WPBWPB/	0.00	0.00	0.00	50	300	-4	0	170.199	0.000	0.32600	0.32600	0.00000
HD-07.2B-01V	22	8.625	0	0.250	0.250	0.000	0.000	0.000	0.00	90	0.00	A216/WCBWCB/	0.00	0.00	0.00	50	300	-4	0	170.199	0.000	0.32600	0.00000	0.00000
HD-07.2B-02P	58	8.625	0	0.250	0.250	0.000	0.000	0.000	0.00	90	44.00	A53/BS/	0.00	0.00	0.00	50	300	-4	0	170.199	0.000	0.32600	0.00000	0.00000
HD-07.2B-03T	13	8.625	0	0.250	0.250	0.000	8.625	0.250	0.00	90	0.00	A234/WPBWPB/	0.00	0.00	0.00	50	300	-4	0	170.199	0.000	0.32600	0.00000	0.32600
HD-07.2B-04P	63	8.625	0	0.250	0.250	0.000	0.000	0.000	0.00	93	33.00	A53/BS/	0.00	0.00	0.00	50	300	-4	0	170.199	0.000	0.32600	0.00000	0.00000
HD-07.2B-05R	18	10.750	20	0.250	0.000	0.000	8.625	0.250	0.00	93	0.00	A234/WPBWPB/	0.00	0.00	0.00	50	300	-4	0	170.199	0.000	0.32600	0.32600	0.00000
HD-07.3B-01N	30	10.750	20	0.250	0.365	0.000	0.000	0.000	0.00	90	0.00	A53/BS/	0.00	0.00	0.00	50	300	-4	0	170.199	0.000	0.32600	0.00000	0.00000

Line Name : HD-06.1C FWH 33C to FWH 32C

HD-6.1C-01N	31	8.625	0	0.250	0.250	0.000	0.000	0.000	0.00	90	0.00	A53/BS/	0.00	0.00	0.00	50	300	13	197	0.000	0.000	0.32600	0.00000	0.00000
HD-6.1C-02P	61	8.625	0	0.250	0.250	0.000	0.000	0.000	0.00	180	63.00	A53/BS/	0.00	0.00	0.00	50	300	13	197	0.000	0.000	0.32600	0.00000	0.00000
HD-6.1C-03E	2	8.625	0	0.250	0.250	0.000	0.000	0.000	1.50	90	0.00	A234/WPBWPB/	0.00	0.00	0.00	50	300	13	197	0.000	0.000	0.32600	0.00000	0.00000
HD-6.1C-04P	52	8.625	0	0.250	0.250	0.000	0.000	0.000	0.00	90	112.00	A53/BS/	0.00	0.00	0.00	50	300	13	197	0.000	0.000	0.32600	0.00000	0.00000
HD-6.1C-05E	2	8.625	0	0.250	0.250	0.000	0.000	0.000	1.00	90	0.00	A234/WPBWPB/	0.00	0.00	0.00	50	300	13	197	0.000	0.000	0.32600	0.00000	0.00000
HD-6.1C-06P	52	8.625	0	0.250	0.250	0.000	0.000	0.000	0.00	180	5.00	A53/BS/	0.00	0.00	0.00	50	300	13	197	0.000	0.000	0.32600	0.00000	0.00000
HD-6.1C-07E	4	8.625	0	0.250	0.250	0.000	0.000	0.000	1.00	90	0.00	A234/WPBWPB/	0.00	0.00	0.00	50	300	13	197	0.000	0.000	0.32600	0.00000	0.00000
HD-6.1C-08P_1	54	8.625	0	0.250	0.250	0.000	0.000	0.000	0.00	90	129.38	A53/BS/	0.00	0.00	0.00	50	300	13	197	0.000	0.000	0.32600	0.00000	0.00000
HD-6.1C-08P_2	9	8.625	0	0.250	0.250	0.000	0.000	0.000	0.00	90	42.63	A53/BS/	0.00	0.00	0.00	50	300	13	197	0.000	0.000	0.32600	0.00000	0.00000
HD-6.1C-09E	2	8.625	0	0.250	0.250	0.000	0.000	0.000	1.50	90	0.00	A234/WPBWPB/	0.00	0.00	0.00	50	300	13	197	0.000	0.000	0.32600	0.00000	0.00000
HD-6.1C-10P	52	8.625	0	0.250	0.250	0.000	0.000	0.000	0.00	90	36.00	A53/BS/	0.00	0.00	0.00	50	300	13	197	0.000	0.000	0.32600	0.00000	0.00000
HD-6.1C-11E	2	8.625	0	0.250	0.250	0.000	0.000	0.000	1.50	90	0.00	A234/WPBWPB/	0.00	0.00	0.00	50	300	13	197	0.000	0.000	0.32600	0.00000	0.00000
HD-6.1C-12P	52	8.625	0	0.250	0.250	0.000	0.000	0.000	0.00	180	45.00	A53/BS/	0.00	0.00	0.00	50	300	13	197	0.000	0.000	0.32600	0.00000	0.00000
HD-6.1C-13E	2	8.625	0	0.250	0.250	0.000	0.000	0.000	1.50	90	0.00	A234/WPBWPB/	0.00	0.00	0.00	50	300	13	197	0.000	0.000	0.32600	0.00000	0.00000
HD-6.1C-14P	52	8.625	0	0.250	0.250	0.000	0.000	0.000	0.00	90	42.00	A53/BS/	0.00	0.00	0.00	50	300	13	197	0.000	0.000	0.32600	0.00000	0.00000
HD-6.1C-15E	2	8.625	0	0.250	0.250	0.000	0.000	0.000	1.50	90	0.00	A234/WPBWPB/	0.00	0.00	0.00	50	300	13	197	0.000	0.000	0.32600	0.00000	0.00000
HD-6.1C-16P	52	8.625	0	0.250	0.250	0.000	0.000	0.000	0.00	90	44.00	A53/BS/	0.00	0.00	0.00	50	300	13	197	0.000	0.000	0.32600	0.00000	0.00000
HD-6.1C-17E	2	8.625	0	0.250	0.250	0.000	0.000	0.000	1.50	90	0.00	A234/WPBWPB/	0.00	0.00	0.00	50	300	13	197	0.000	0.000	0.32600	0.00000	0.00000
HD-6.1C-18P	52	8.625	0	0.250	0.250	0.000	0.000	0.000	0.00	90	110.00	A53/BS/	0.00	0.00	0.00	50	300	13	197	0.000	0.000	0.32600	0.00000	0.00000
HD-6.1C-19T	15	8.625	0	0.250	0.250	0.000	8.625	0.250	0.00	90	0.00	A234/WPBWPB/	0.00	0.00	0.00	50	300	13	197	0.000	0.000	0.32600	0.32600	0.00000
HD-6.1C-20P	65	8.625	0	0.250	0.250	0.000	0.000	0.000	0.00	90	96.00	A53/BS/	0.00	0.00	0.00	50	300	13	197	0.000	0.000	0.32600	0.00000	0.00000

Component Name	Geom Code	Pipe Size OD (in)	Sch.	Tnom (in)	Tinit (in)	Tcrit (in)	Br/Small End OD (in)	Br/Small Tnom (in)	R / D Ratio	Orient Angle (Deg.)	Pipe Length (in)	Spec/Type/ Class	Material Cr. (%)	Cu. (%)	Mo. (%)	Design Press. (psig)	Design Temp. (Deg. F)	Op. Press. (psig)	Op. Temp. (Deg. F)	Op. Enth. (Btu/lbm)	Op. Qual.	Flow Rate U/S Mn. (Mlbm/hr)	D/S Mn. (Mlbm/hr)	Br.
HD-6.1C-34T	15	8.625	0	0.250	0.250	0.000	8.625	0.250	0.00	90	0.00	A234/WPBWPB/	0.00	0.00	0.00	50	300	13	197	0.000	0.000	0.32600	0.32600	0.00000
HD-6.1C-35P	65	8.625	0	0.250	0.250	0.000	0.000	0.000	0.00	90	0.00	A53/BS/	0.00	0.00	0.00	50	300	13	197	0.000	0.000	0.32600	0.00000	0.00000
HD-6.1C-21E	2	8.625	0	0.250	0.250	0.000	0.000	0.000	1.50	90	0.00	A234/WPBWPB/	0.00	0.00	0.00	50	300	13	197	0.000	0.000	0.32600	0.00000	0.00000
HD-6.1C-22P	52	8.625	0	0.250	0.250	0.000	0.000	0.000	0.00	0	115.00	A53/BS/	0.00	0.00	0.00	50	300	13	197	0.000	0.000	0.32600	0.00000	0.00000
HD-6.1C-23E	2	8.625	0	0.250	0.250	0.000	0.000	0.000	1.50	90	0.00	A234/WPBWPB/	0.00	0.00	0.00	50	300	13	197	0.000	0.000	0.32600	0.00000	0.00000
HD-6.1C-24P	52	8.625	0	0.250	0.250	0.000	0.000	0.000	0.00	90	60.00	A53/BS/	0.00	0.00	0.00	50	300	13	197	0.000	0.000	0.32600	0.00000	0.00000
HD-6.1C-25E	2	8.625	0	0.250	0.250	0.000	0.000	0.000	1.00	90	0.00	A234/WPBWPB/	0.00	0.00	0.00	50	300	13	197	0.000	0.000	0.32600	0.00000	0.00000
HD-6.1C-28E	3	8.625	0	0.250	0.250	0.000	0.000	0.000	1.50	90	0.00	A234/WPBWPB/	0.00	0.00	0.00	50	300	13	197	0.000	0.000	0.32600	0.00000	0.00000
HD-6.1C-29P	53	8.625	0	0.250	0.250	0.000	0.000	0.000	0.00	45	19.00	A53/BS/	0.00	0.00	0.00	50	300	13	197	0.000	0.000	0.32600	0.00000	0.00000
HD-6.1C-30E	1	8.625	0	0.250	0.250	0.000	0.000	0.000	1.50	90	0.00	A234/WPBWPB/	0.00	0.00	0.00	50	300	13	197	0.000	0.000	0.32600	0.00000	0.00000
HD-6.1C-31P	51	8.625	0	0.250	0.250	0.000	0.000	0.000	0.00	90	7.00	A53/BS/	0.00	0.00	0.00	50	300	13	197	0.000	0.000	0.32600	0.00000	0.00000
HD-6.1C-32E	4	8.625	0	0.250	0.250	0.000	0.000	0.000	1.50	90	0.00	A234/WPBWPB/	0.00	0.00	0.00	50	300	13	197	0.000	0.000	0.32600	0.00000	0.00000
HD-6.1C-33P	54	8.625	0	0.250	0.250	0.000	0.000	0.000	0.00	0	17.00	A53/BS/	0.00	0.00	0.00	50	300	13	197	0.000	0.000	0.32600	0.00000	0.00000
HD-6.2C-01E	16	8.625	20	0.250	0.000	0.000	6.625	0.280	1.50	90	0.00	A234/WPBWPB/	0.00	0.00	0.00	50	300	13	197	0.000	0.000	0.32600	0.32600	0.00000
HD-07.1C-01V	24	6.625	0	0.280	0.280	0.000	0.000	0.000	0.00	90	0.00	A216/WCBWCB/	0.00	0.00	0.00	50	300	-4	0	170.199	0.000	0.32600	0.00000	0.00000
HD-07.1C-02R	18	8.625	20	0.250	0.000	0.000	6.625	0.280	0.00	90	0.00	A234/WPBWPB/	0.00	0.00	0.00	50	300	-4	0	170.199	0.000	0.32600	0.32600	0.00000
HD-07.2C-01V	22	8.625	0	0.250	0.250	0.000	0.000	0.000	0.00	90	0.00	A216/WCBWCB/	0.00	0.00	0.00	50	300	-4	0	170.199	0.000	0.32600	0.00000	0.00000
HD-07.2C-02P	58	8.625	0	0.250	0.250	0.000	0.000	0.000	0.00	90	44.00	A53/BS/	0.00	0.00	0.00	50	300	-4	0	170.199	0.000	0.32600	0.00000	0.00000
HD-07.2C-03T	13	8.625	0	0.250	0.250	0.000	8.625	0.250	0.00	90	0.00	A234/WPBWPB/	0.00	0.00	0.00	50	300	-4	0	170.199	0.000	0.32600	0.00000	0.32600
HD-07.2C-04P	63	8.625	0	0.250	0.250	0.000	0.000	0.000	0.00	93	33.00	A53/BS/	0.00	0.00	0.00	50	300	-4	0	170.199	0.000	0.32600	0.00000	0.00000
HD-07.2C-05R	18	10.750	20	0.250	0.000	0.000	8.625	0.250	0.00	93	0.00	A234/WPBWPB/	0.00	0.00	0.00	50	300	-4	0	170.199	0.000	0.32600	0.32600	0.00000
HD-07.3C-01N	30	10.750	20	0.250	0.365	0.000	0.000	0.000	0.00	90	0.00	A53/BS/	0.00	0.00	0.00	50	300	-4	0	170.199	0.000	0.32600	0.00000	0.00000
Line Name : HD-08.1A FWH 32A to FWH 31A																								
HD-8.1A-01N	31	12.750	20	0.250	0.375	0.000	0.000	0.000	0.00	90	0.00	A53/BS/	0.00	0.00	0.00	50	300	-4	163	0.000	0.000	0.46200	0.00000	0.00000
HD-8.1A-02P	61	12.750	0	0.250	0.250	0.000	0.000	0.000	0.00	180	5.00	A53/BS/	0.00	0.00	0.00	50	300	-4	163	0.000	0.000	0.46200	0.00000	0.00000
HD-8.1A-03E	4	12.750	0	0.250	0.250	0.000	0.000	0.000	1.50	90	0.00	A234/WPBWPB/	0.00	0.00	0.00	50	300	-4	163	0.000	0.000	0.46200	0.00000	0.00000
HD-8.1A-04P	54	12.750	0	0.250	0.250	0.000	0.000	0.000	0.00	90	158.00	A53/BS/	0.00	0.00	0.00	50	300	-4	163	0.000	0.000	0.46200	0.00000	0.00000
HD-8.1A-05E	2	12.750	0	0.250	0.250	0.000	0.000	0.000	1.50	90	0.00	A234/WPBWPB/	0.00	0.00	0.00	50	300	-4	163	0.000	0.000	0.46200	0.00000	0.00000
HD-8.1A-06P	52	12.750	0	0.250	0.250	0.000	0.000	0.000	0.00	90	59.00	A53/BS/	0.00	0.00	0.00	50	300	-4	163	0.000	0.000	0.46200	0.00000	0.00000
HD-8.1A-08P	60	12.750	0	0.250	0.250	0.000	0.000	0.000	0.00	0	13.00	A53/BS/	0.00	0.00	0.00	50	300	-4	163	0.000	0.000	0.46200	0.00000	0.00000
HD-8.1A-09E	2	12.750	0	0.250	0.250	0.000	0.000	0.000	1.50	90	0.00	A234/WPBWPB/	0.00	0.00	0.00	50	300	-4	163	0.000	0.000	0.46200	0.00000	0.00000
HD-8.1A-10V	22	12.750	0	0.250	0.250	0.000	0.000	0.000	0.00	90	0.00	A216/WCBWCB/	0.00	0.00	0.00	50	300	-4	163	0.000	0.000	0.46200	0.00000	0.00000
HD-8.2A-01R	7	12.750	20	0.250	0.000	0.000	10.750	0.250	0.00	90	0.00	A234/WPBWPB/	0.00	0.00	0.00	50	300	-4	163	0.000	0.000	0.46200	0.46200	0.00000
HD-09.1A-01V	24	10.750	0	0.250	0.250	0.000	0.000	0.000	0.00	90	0.00	A216/WCBWCB/	0.00	0.00	0.00	50	300	-9	0	137.199	0.000	0.46200	0.00000	0.00000
HD-09.1A-02R	18	12.750	20	0.250	0.000	0.000	10.750	0.250	0.00	90	0.00	A234/WPBWPB/	0.00	0.00	0.00	50	300	-9	0	137.199	0.000	0.46200	0.46200	0.00000
HD-09.2A-01V	22	12.750	0	0.250	0.250	0.000	0.000	0.000	0.00	90	0.00	A216/WCBWCB/	0.00	0.00	0.00	50	300	-9	0	137.199	0.000	0.46200	0.00000	0.00000
HD-09.2A-02P	58	12.750	0	0.406	0.406	0.000	0.000	0.000	0.00	90	10.00	A-403/WP316WP3/	0.00	0.00	0.00	50	300	-9	0	137.199	0.000	0.46200	0.00000	0.00000
HD-09.2A-03E	3	12.750	0	0.406	0.406	0.000	0.000	0.000	1.50	90	0.00	A-403/WP316WP3/	0.00	0.00	0.00	50	300	-9	0	137.199	0.000	0.46200	0.00000	0.00000
HD-09.2A-04T	13	12.750	0	0.406	0.406	0.000	12.750	0.406	0.00	90	0.00	A-403/WP316WP3/	0.00	0.00	0.00	50	300	-9	0	137.199	0.000	0.46200	0.23100	0.23100
Line Name : HD-08.1B FWH 32B to FWH 31B																								
HD-8.1B-01N	31	12.750	20	0.250	0.375	0.000	0.000	0.000	0.00	90	0.00	A53/BS/	0.00	0.00	0.00	50	300	-4	163	0.000	0.000	0.46200	0.00000	0.00000
HD-8.1B-02P	61	12.750	0	0.250	0.250	0.000	0.000	0.000	0.00	180	5.00	A53/BS/	0.00	0.00	0.00	50	300	-4	163	0.000	0.000	0.46200	0.00000	0.00000
HD-8.1B-03E	4	12.750	0	0.250	0.250	0.000	0.000	0.000	1.50	90	0.00	A234/WPBWPB/	0.00	0.00	0.00	50	300	-4	163	0.000	0.000	0.46200	0.00000	0.00000
HD-8.1B-04P	54	12.750	0	0.250	0.250	0.000	0.000	0.000	0.00	90	158.00	A53/BS/	0.00	0.00	0.00	50	300	-4	163	0.000	0.000	0.46200	0.00000	0.00000
HD-8.1B-05E	2	12.750	0	0.250	0.250	0.000	0.000	0.000	1.50	90	0.00	A234/WPBWPB/	0.00	0.00	0.00	50	300	-4	163	0.000	0.000	0.46200	0.00000	0.00000
HD-8.1B-06P	52	12.750	0	0.250	0.250	0.000	0.000	0.000	0.00	90	59.00	A53/BS/	0.00	0.00	0.00	50	300	-4	163	0.000	0.000	0.46200	0.00000	0.00000
HD-8.1B-08P	60	12.750	0	0.250	0.250	0.000	0.000	0.000	0.00	0	13.00	A53/BS/	0.00	0.00	0.00	50	300	-4	163	0.000	0.000	0.46200	0.00000	0.00000
HD-8.1B-09E	2	12.750	0	0.250	0.250	0.000	0.000	0.000	1.50	90	0.00	A234/WPBWPB/	0.00	0.00	0.00	50	300	-4	163	0.000	0.000	0.46200	0.00000	0.00000
HD-8.1B-10V	22	12.750	0	0.250	0.250	0.000	0.000	0.000	0.00	90	0.00	A216/WCBWCB/	0.00	0.00	0.00	50	300	-4	163	0.000	0.000	0.46200	0.00000	0.00000
HD-8.2B-01R	7	12.750	20	0.250	0.000	0.000	10.750	0.250	0.00	90	0.00	A234/WPBWPB/	0.00	0.00	0.00	50	300	-4	163	0.000	0.000	0.46200	0.46200	0.00000
HD-09.1B-01V	24	10.750	0	0.250	0.250	0.000	0.000	0.000	0.00	90	0.00	A216/WCBWCB/	0.00	0.00	0.00	50	300	-9	0	137.199	0.000	0.46200	0.00000	0.00000
HD-09.1B-02R	18	12.750	20	0.250	0.000	0.000	10.750	0.250	0.00	90	0.00	A234/WPBWPB/	0.00	0.00	0.00	50	300	-9	0	137.199	0.000	0.46200	0.46200	0.00000
HD-09.2B-01V	22	12.750	0	0.250	0.250	0.000	0.000	0.000	0.00	90	0.00	A216/WCBWCB/	0.00	0.00	0.00	50	300	-9	0	137.199	0.000	0.46200	0.00000	0.00000
HD-09.2B-02P	58	12.750	0	0.406	0.406	0.000	0.000	0.000	0.00	90	10.00	A-403/WP316WP3/	0.00	0.00	0.00	50	300	-9	0	137.199	0.000	0.46200	0.00000	0.00000
HD-09.2B-03E	3	12.750	0	0.406	0.406	0.000	0.000	0.000	1.50	90	0.00	A-403/WP316WP3/	0.00	0.00	0.00	50	300	-9	0	137.199	0.000	0.46200	0.00000	0.00000
HD-09.2B-04T	13	12.750	0	0.406	0.406	0.000	12.750	0.406	0.00	90	0.00	A-403/WP316WP3/	0.00	0.00	0.00	50	300	-9	0	137.199	0.000	0.46200	0.23100	0.23100

Component Name	Geom Code	Pipe Size OD (in)	Sch.	Tnom (in)	Tinit (in)	Tcrit (in)	Br/Small End OD (in)	Br/Small Tnom (in)	R / D Ratio	Orient Angle (Deg.)	Pipe Length (in)	Spec/Type/ Class	Material Cr. (%)	Material Cu. (%)	Material Mo. (%)	Design Press. (psig)	Design Temp. (Deg. F)	Op. Press. (psig)	Op. Temp. (Deg. F)	Op. Enth. (Btu/lbm)	Op. Qual.	Flow Rate U/S Mn. (Mlbm/hr)	Flow Rate D/S Mn. (Mlbm/hr)	Br.
Line Name : HD-08.1C FWH 32C to FWH 31C																								
HD-8.1C-01N	31	12.750	0	0.375	0.375	0.000	0.000	0.000	0.00	90	0.00	A53/BS/	0.00	0.00	0.00	50	300	-4	163	0.000	0.000	0.46200	0.00000	0.00000
HD-8.1C-02P	61	12.750	0	0.250	0.250	0.000	0.000	0.000	0.00	180	5.00	A53/BS/	0.00	0.00	0.00	50	300	-4	163	0.000	0.000	0.46200	0.00000	0.00000
HD-8.1C-03E	4	12.750	0	0.250	0.250	0.000	0.000	0.000	1.50	90	0.00	A234/WPBWPB/	0.00	0.00	0.00	50	300	-4	163	0.000	0.000	0.46200	0.00000	0.00000
HD-8.1C-04P	54	12.750	0	0.250	0.250	0.000	0.000	0.000	0.00	90	158.00	A53/BS/	0.00	0.00	0.00	50	300	-4	163	0.000	0.000	0.46200	0.00000	0.00000
HD-8.1C-05E	2	12.750	0	0.250	0.250	0.000	0.000	0.000	1.50	90	0.00	A234/WPBWPB/	0.00	0.00	0.00	50	300	-4	163	0.000	0.000	0.46200	0.00000	0.00000
HD-8.1C-06P	52	12.750	0	0.250	0.250	0.000	0.000	0.000	0.00	90	59.00	A53/BS/	0.00	0.00	0.00	50	300	-4	163	0.000	0.000	0.46200	0.00000	0.00000
HD-8.1C-08P	60	12.750	0	0.250	0.250	0.000	0.000	0.000	0.00	0	13.00	A53/BS/	0.00	0.00	0.00	50	300	-4	163	0.000	0.000	0.46200	0.00000	0.00000
HD-8.1C-09E	2	12.750	0	0.250	0.250	0.000	0.000	0.000	1.50	90	0.00	A234/WPBWPB/	0.00	0.00	0.00	50	300	-4	163	0.000	0.000	0.46200	0.00000	0.00000
HD-8.1C-10V	22	12.750	0	0.250	0.250	0.000	0.000	0.000	0.00	90	0.00	A216/WCBWCB/	0.00	0.00	0.00	50	300	-4	163	0.000	0.000	0.46200	0.00000	0.00000
HD-8.2C-01R	7	12.750	20	0.250	0.000	0.000	10.750	0.250	0.00	90	0.00	A234/WPBWPB/	0.00	0.00	0.00	50	300	-4	163	0.000	0.000	0.46200	0.46200	0.00000
HD-09.1C-01V	24	10.750	0	0.250	0.250	0.000	0.000	0.000	0.00	90	0.00	A216/WCBWCB/	0.00	0.00	0.00	50	300	-9	0	137.199	0.000	0.46200	0.00000	0.00000
HD-09.1C-02R	18	12.750	20	0.250	0.000	0.000	10.750	0.250	0.00	90	0.00	A234/WPBWPB/	0.00	0.00	0.00	50	300	-9	0	137.199	0.000	0.46200	0.46200	0.00000
HD-09.2C-01V	22	12.750	0	0.250	0.250	0.000	0.000	0.000	0.00	90	0.00	A216/WCBWCB/	0.00	0.00	0.00	50	300	-9	0	137.199	0.000	0.46200	0.00000	0.00000
HD-09.2C-02P	58	12.750	0	0.406	0.406	0.000	0.000	0.000	0.00	90	10.00	A-403/WP316WP3/	0.00	0.00	0.00	50	300	-9	0	137.199	0.000	0.46200	0.00000	0.00000
HD-09.2C-03E	3	12.750	0	0.406	0.406	0.000	0.000	0.000	1.50	90	0.00	A-403/WP316WP3/	0.00	0.00	0.00	50	300	-9	0	137.199	0.000	0.46200	0.00000	0.00000
HD-09.2C-04T	13	12.750	0	0.406	0.406	0.000	12.750	0.406	0.00	90	0.00	A-403/WP316WP3/	0.00	0.00	0.00	50	300	-9	0	137.199	0.000	0.46200	0.23100	0.23100
Line Name : HD-09.3A FWH 32A to FWH 31A																								
HD-09.3A-01P	64	12.750	40	0.406	0.409	0.000	0.000	0.000	0.00	90	44.00	A-403/WP316WP3/	0.00	0.00	0.00	50	300	-9	0	137.199	0.000	0.23100	0.00000	0.00000
HD-09.3A-02N	30	12.750	0	0.406	0.406	0.000	0.000	0.000	0.00	90	0.00	A-403/WP316WP3/	0.00	0.00	0.00	50	300	-9	0	137.199	0.000	0.23100	0.00000	0.00000
Line Name : HD-09.3B FWH 32B to FWH 31B																								
HD-09.3B-01P	64	12.750	0	0.406	0.406	0.000	0.000	0.000	0.00	90	44.00	A-403/WP316WP3/	0.00	0.00	0.00	50	300	-9	0	137.199	0.000	0.23100	0.00000	0.00000
HD-09.3B-02N	30	12.750	0	0.406	0.406	0.000	0.000	0.000	0.00	90	0.00	A-403/WP316WP3/	0.00	0.00	0.00	50	300	-9	0	137.199	0.000	0.23100	0.00000	0.00000
Line Name : HD-09.3C FWH 32C to FWH 31C																								
HD-09.3C-01P	64	12.750	0	0.406	0.406	0.000	0.000	0.000	0.00	90	44.00	A-403/WP316WP3/	0.00	0.00	0.00	50	300	-9	0	137.199	0.000	0.23100	0.00000	0.00000
HD-09.3C-02N	30	12.750	0	0.406	0.406	0.000	0.000	0.000	0.00	90	0.00	A-403/WP316WP3/	0.00	0.00	0.00	50	300	-9	0	137.199	0.000	0.23100	0.00000	0.00000
Line Name : HD-09.4A FWH 32A to FWH 31A																								
HD-09.4A-01P	63	12.750	0	0.406	0.406	0.000	0.000	0.000	0.00	60	5.00	A-403/WP316WP3/	0.00	0.00	0.00	50	300	-9	0	137.199	0.000	0.23100	0.00000	0.00000
HD-09.4A-02E	4	12.750	40	0.406	0.462	0.000	0.000	0.000	1.50	90	0.00	A-403/WP316WP3/	0.00	0.00	0.00	50	300	-9	0	137.199	0.000	0.23100	0.00000	0.00000
HD-09.4A-03P	54	12.750	0	0.406	0.406	0.000	0.000	0.000	0.00	90	44.00	A-403/WP316WP3/	0.00	0.00	0.00	50	300	-9	0	137.199	0.000	0.23100	0.00000	0.00000
HD-09.4A-04N	30	12.750	40	0.406	0.375	0.000	0.000	0.000	0.00	90	0.00	A-403/WP316WP3/	0.00	0.00	0.00	50	300	-9	0	137.199	0.000	0.23100	0.00000	0.00000
Line Name : HD-09.4B FWH 32B to FWH 31B																								
HD-09.4B-01P	63	12.750	0	0.406	0.406	0.000	0.000	0.000	0.00	60	5.00	A-403/WP316WP3/	0.00	0.00	0.00	50	300	-9	0	137.199	0.000	0.23100	0.00000	0.00000
HD-09.4B-02E	4	12.750	0	0.406	0.406	0.000	0.000	0.000	1.50	90	0.00	A-403/WP316WP3/	0.00	0.00	0.00	50	300	-9	0	137.199	0.000	0.23100	0.00000	0.00000
HD-09.4B-03P	54	12.750	0	0.406	0.406	0.000	0.000	0.000	0.00	90	44.00	A-403/WP316WP3/	0.00	0.00	0.00	50	300	-9	0	137.199	0.000	0.23100	0.00000	0.00000
HD-09.4B-04N	30	12.750	40	0.406	0.375	0.000	0.000	0.000	0.00	90	0.00	A-403/WP316WP3/	0.00	0.00	0.00	50	300	-9	0	137.199	0.000	0.23100	0.00000	0.00000
Line Name : HD-09.4C FWH 32C to FWH 31C																								
HD-09.4C-01P	63	12.750	0	0.406	0.406	0.000	0.000	0.000	0.00	60	5.00	A-403/WP316WP3/	0.00	0.00	0.00	50	300	-9	0	137.199	0.000	0.23100	0.00000	0.00000
HD-09.4C-02E	4	12.750	0	0.406	0.406	0.000	0.000	0.000	1.50	90	0.00	A-403/WP316WP3/	0.00	0.00	0.00	50	300	-9	0	137.199	0.000	0.23100	0.00000	0.00000
HD-09.4C-03P	54	12.750	0	0.406	0.406	0.000	0.000	0.000	0.00	90	44.00	A-403/WP316WP3/	0.00	0.00	0.00	50	300	-9	0	137.199	0.000	0.23100	0.00000	0.00000
HD-09.4C-04N	30	12.750	40	0.406	0.375	0.000	0.000	0.000	0.00	90	0.00	A-403/WP316WP3/	0.00	0.00	0.00	50	300	-9	0	137.199	0.000	0.23100	0.00000	0.00000
Line Name : HD-10.1A HD TK to HD PMP 31																								

Component Name	Geom Code	Pipe Size OD (in)	Sch.	Tnom (in)	Tinit (in)	Tcrit (in)	Br/Small End OD (in)	Br/Small Tnom (in)	R / D Ratio	Orient Angle (Deg.)	Pipe Length (in)	Spec/Type/ Class	Material Cr. (%)	Cu. (%)	Mo. (%)	Design Press. (psig)	Design Temp. (Deg. F)	Op. Press. (psig)	Op. Temp. (Deg. F)	Op. Enth. (Btu/lbm)	Op. Qual.	Flow Rate U/S Mn. (Mlbm/hr)	D/S Mn. (Mlbm/hr)	Br.
HD-10.1A-01N	31	24.000	20	0.375	0.562	0.000	0.000	0.000	0.00	90	0.00	A106/BB/	0.00	0.00	0.00	250	400	171	374	0.000	0.000	1.83000	0.00000	0.00000
HD-10.1A-02P	61	24.000	0	0.375	0.375	0.000	0.000	0.000	0.00	180	5.00	A53/BS/	0.00	0.00	0.00	250	400	171	374	0.000	0.000	1.83000	0.00000	0.00000
HD-10.2A-01E	16	24.000	20	0.375	0.000	0.000	18.000	0.312	1.50	90	0.00	A234/WPBWPB/	0.00	0.00	0.00	250	400	171	374	0.000	0.000	1.83000	1.83000	0.00000
HD-10.2A-02E	3	18.000	0	0.312	0.312	0.000	0.000	0.000	1.50	90	0.00	A234/WPBWPB/	0.00	0.00	0.00	250	400	171	374	0.000	0.000	1.83000	0.00000	0.00000
HD-10.2A-03P	53	18.000	0	0.312	0.312	0.000	0.000	0.000	0.00	90	6.75	A53/BS/	0.00	0.00	0.00	250	400	171	374	0.000	0.000	1.83000	0.00000	0.00000
HD-10.2A-04V	22	18.000	0	0.312	0.312	0.000	0.000	0.000	0.00	90	0.00	A216/WCBWCB/	0.00	0.00	0.00	250	400	171	374	0.000	0.000	1.83000	0.00000	0.00000
HD-10.2A-05P	58	18.000	0	0.312	0.312	0.000	0.000	0.000	0.00	90	80.00	A53/BS/	0.00	0.00	0.00	250	400	171	374	0.000	0.000	1.83000	0.00000	0.00000
HD-10.2A-07X	6	18.000	0	0.312	0.312	0.000	0.000	0.000	0.00	90	0.00	A234/WPBWPB/	0.00	0.00	0.00	250	400	171	374	0.000	0.000	1.83000	0.00000	0.00000
HD-10.2A-06N	30	18.000	0	0.312	0.312	0.000	0.000	0.000	0.00	90	0.00	A234/WPBWPB/	0.00	0.00	0.00	250	400	171	374	0.000	0.000	1.83000	0.00000	0.00000
Line Name : HD-10.1B HD TK to HD PMP 32																								
HD-10.1B-01N	31	24.000	20	0.375	0.562	0.000	0.000	0.000	0.00	90	0.00	A106/BB/	0.00	0.00	0.00	250	400	171	374	0.000	0.000	1.83000	0.00000	0.00000
HD-10.1B-02P	61	24.000	0	0.375	0.375	0.000	0.000	0.000	0.00	180	5.00	A53/BS/	0.00	0.00	0.00	250	400	171	374	0.000	0.000	1.83000	0.00000	0.00000
HD-10.2B-01E	16	24.000	20	0.375	0.000	0.000	18.000	0.312	1.50	90	0.00	A234/WPBWPB/	0.00	0.00	0.00	250	400	171	374	0.000	0.000	1.83000	1.83000	0.00000
HD-10.2B-02P	54	18.000	0	0.312	0.312	0.000	0.000	0.000	0.00	90	18.00	A53/BS/	0.00	0.00	0.00	250	400	171	374	0.000	0.000	1.83000	0.00000	0.00000
HD-10.2B-03V	22	18.000	0	0.312	0.312	0.000	0.000	0.000	0.00	90	0.00	A216/WCBWCB/	0.00	0.00	0.00	250	400	171	374	0.000	0.000	1.83000	0.00000	0.00000
HD-10.2B-04P	58	18.000	0	0.312	0.312	0.000	0.000	0.000	0.00	90	80.00	A53/BS/	0.00	0.00	0.00	250	400	171	374	0.000	0.000	1.83000	0.00000	0.00000
HD-10.2B-06X	6	18.000	0	0.312	0.312	0.000	0.000	0.000	0.00	90	0.00	A234/WPBWPB/	0.00	0.00	0.00	250	400	171	374	0.000	0.000	1.83000	0.00000	0.00000
HD-10.2B-05N	30	18.000	0	0.312	0.312	0.000	0.000	0.000	0.00	90	0.00	A234/WPBWPB/	0.00	0.00	0.00	250	400	171	374	0.000	0.000	1.83000	0.00000	0.00000
Line Name : HD-11.1A HD PMP 31 to HDR																								
HD-11.1A-01N	31	12.750	0	0.500	0.500	0.000	0.000	0.000	0.00	90	0.00	A234/WPBWPB/	0.00	0.00	0.00	730	400	469	361	0.000	0.000	1.83000	0.00000	0.00000
HD-11.1A-02V	25	12.750	0	0.500	0.500	0.000	0.000	0.000	0.00	90	0.00	A216/WCBWCB/	0.00	0.00	0.00	730	400	469	361	0.000	0.000	1.83000	0.00000	0.00000
HD-11.2A-01R	7	12.750	0	0.500	0.000	0.000	8.625	0.322	0.00	90	0.00	A234/WPBWPB/	0.00	0.00	0.00	730	400	469	361	0.000	0.000	1.83000	1.83000	0.00000
HD-12.1A-01V	24	8.625	40	0.322	0.500	0.000	0.000	0.000	0.00	90	0.00	A216/WCBWCB/	0.00	0.00	0.00	730	400	469	361	0.000	0.000	1.83000	0.00000	0.00000
HD-12.1A-02R	18	12.750	0	0.500	0.000	0.000	8.625	0.322	0.00	90	0.00	A234/WPBWPB/	0.00	0.00	0.00	730	400	469	361	0.000	0.000	1.83000	1.83000	0.00000
HD-12.2A-01V	22	12.750	0	0.500	0.500	0.000	0.000	0.000	0.00	90	0.00	A216/WCBWCB/	0.00	0.00	0.00	730	400	469	361	0.000	0.000	1.83000	0.00000	0.00000
HD-12.2A-02P	58	12.750	0	0.500	0.500	0.000	0.000	0.000	0.00	90	6.75	A106/BB/	0.00	0.00	0.00	730	400	469	361	0.000	0.000	1.83000	0.00000	0.00000
HD-12.2A-03E	4	12.750	0	0.500	0.500	0.000	0.000	0.000	1.00	90	0.00	A234/WPBWPB/	0.00	0.00	0.00	730	400	469	361	0.000	0.000	1.83000	0.00000	0.00000
HD-12.2A-04T	15	12.750	0	0.500	0.500	0.000	10.750	0.500	0.00	90	0.00	A234/WPBWPB/	0.00	0.00	0.00	730	400	469	361	0.000	0.000	1.83000	1.83000	0.00000
HD-12.2A-05P	65	12.750	0	0.500	0.664	0.000	0.000	0.000	0.00	0	132.00	A106/BB/	0.00	0.00	0.00	730	400	469	361	0.000	0.000	1.83000	0.00000	0.00000
HD-12.2A-06O	6	12.750	0	0.500	0.500	0.000	0.000	0.000	0.00	0	0.00	A234/WPBWPB/	0.00	0.00	0.00	730	400	469	361	0.000	0.000	1.83000	0.00000	0.00000
HD-12.2A-07P	56	12.750	0	0.500	0.569	0.000	0.000	0.000	0.00	0	65.00	A106/BB/	0.00	0.00	0.00	730	400	469	361	0.000	0.000	1.83000	0.00000	0.00000
Line Name : HD-11.1B HD PMP 32 to HDR																								
HD-11.1B-01N	31	12.750	0	0.500	0.500	0.000	0.000	0.000	0.00	90	0.00	A234/WPBWPB/	0.00	0.00	0.00	730	400	469	361	0.000	0.000	1.83000	0.00000	0.00000
HD-11.1B-02V	25	12.750	0	0.500	0.500	0.000	0.000	0.000	0.00	90	0.00	A216/WCBWCB/	0.00	0.00	0.00	730	400	469	361	0.000	0.000	1.83000	0.00000	0.00000
HD-11.2B-01R	7	12.750	0	0.500	0.000	0.000	8.625	0.322	0.00	90	0.00	A234/WPBWPB/	0.00	0.00	0.00	730	400	469	361	0.000	0.000	1.83000	1.83000	0.00000
HD-12.1B-01V	24	8.625	0	0.322	0.322	0.000	0.000	0.000	0.00	90	0.00	A216/WCBWCB/	0.00	0.00	0.00	730	400	469	361	0.000	0.000	1.83000	0.00000	0.00000
HD-12.1B-02R	18	12.750	0	0.500	0.000	0.000	8.625	0.322	0.00	90	0.00	A234/WPBWPB/	0.00	0.00	0.00	730	400	469	361	0.000	0.000	1.83000	1.83000	0.00000
HD-12.2B-01V	22	12.750	0	0.500	0.500	0.000	0.000	0.000	0.00	90	0.00	A216/WCBWCB/	0.00	0.00	0.00	730	400	469	361	0.000	0.000	1.83000	0.00000	0.00000
HD-12.2B-02P	58	12.750	0	0.500	0.539	0.000	0.000	0.000	0.00	90	6.75	A106/BB/	0.00	0.00	0.00	730	400	469	361	0.000	0.000	1.83000	0.00000	0.00000
HD-12.2B-03E	4	12.750	0	0.500	0.535	0.000	0.000	0.000	1.00	90	0.00	A234/WPBWPB/	0.00	0.00	0.00	730	400	469	361	0.000	0.000	1.83000	0.00000	0.00000
HD-12.2B-04T	15	12.750	0	0.500	0.500	0.000	10.750	0.500	0.00	90	0.00	A234/WPBWPB/	0.00	0.00	0.00	730	400	469	361	0.000	0.000	1.83000	1.83000	0.00000
HD-12.2B-05P	65	12.750	0	0.500	0.516	0.000	0.000	0.000	0.00	0	132.00	A106/BB/	0.00	0.00	0.00	730	400	469	361	0.000	0.000	1.83000	0.00000	0.00000
HD-12.2B-06O	6	12.750	0	0.500	0.500	0.000	0.000	0.000	0.00	0	0.00	A234/WPBWPB/	0.00	0.00	0.00	730	400	469	361	0.000	0.000	1.83000	0.00000	0.00000
HD-12.2B-07P	56	12.750	0	0.500	0.527	0.000	0.000	0.000	0.00	0	65.00	A106/BB/	0.00	0.00	0.00	730	400	469	361	0.000	0.000	1.83000	0.00000	0.00000
HD-12.3-01P	60	16.000	60	0.656	0.654	0.000	0.000	0.000	0.00	90	0.00	A106/BB/	0.00	0.00	0.00	730	400	469	361	0.000	0.000	1.83000	0.00000	0.00000
Line Name : HD-12.2A HD PMP HDR to CD SYS																								
HD-12.2A-08T	12	16.000	60	0.656	0.700	0.000	12.750	0.500	0.00	90	0.00	A234/WPBWPB/	0.00	0.00	0.00	730	400	469	361	0.000	0.000	1.83000	3.66000	1.83000
HD-12.4-01E	4	16.000	60	0.656	0.789	0.000	0.000	0.000	1.50	90	0.00	A234/WPBWPB/	0.00	0.00	0.00	730	400	469	361	0.000	0.000	3.66000	0.00000	0.00000
HD-12.4-02P	54	16.000	0	0.656	0.656	0.000	0.000	0.000	0.00	180	42.00	A106/BB/	0.00	0.00	0.00	730	400	469	361	0.000	0.000	3.66000	0.00000	0.00000
HD-12.4-03E	2	16.000	0	0.656	0.656	0.000	0.000	0.000	1.50	90	0.00	A234/WPBWPB/	0.00	0.00	0.00	730	400	469	361	0.000	0.000	3.66000	0.00000	0.00000
HD-12.4-04P	52	16.000	0	0.656	0.656	0.000	0.000	0.000	0.00	90	100.00	A106/BB/	0.00	0.00	0.00	730	400	469	361	0.000	0.000	3.66000	0.00000	0.00000
HD-12.4-05E	1	16.000	0	0.656	0.656	0.000	0.000	0.000	1.50	90	0.00	A234/WPBWPB/	0.00	0.00	0.00	730	400	469	361	0.000	0.000	3.66000	0.00000	0.00000
HD-12.4-06P	51	16.000	0	0.656	0.656	0.000	0.000	0.000	0.00	90	86.00	A106/BB/	0.00	0.00	0.00	730	400	469	361	0.000	0.000	3.66000	0.00000	0.00000
HD-12.4-07E	2	16.000	0	0.656	0.656	0.000	0.000	0.000	1.50	90	0.00	A234/WPBWPB/	0.00	0.00	0.00	730	400	469	361	0.000	0.000	3.66000	0.00000	0.00000

Component Name	Geom Code	Pipe Size OD (in)	Sch.	Tnom (in)	Tinit (in)	Tcrit (in)	Br/Small End OD (in)	Br/Small Tnom (in)	R / D Ratio	Orient Angle (Deg.)	Pipe Length (in)	Spec/Type/ Class	Material Cr. (%)	Material Cu. (%)	Material Mo. (%)	Design Press. (psig)	Design Temp. (Deg. F)	Op. Press. (psig)	Op. Temp. (Deg. F)	Op. Enth. (Btu/lbm)	Op. Qual.	Flow Rate U/S Mn. (Mlbm/hr)	Flow Rate D/S Mn. (Mlbm/hr)	Br.
HD-12.4-08P	52	16.000	0	0.656	0.656	0.000	0.000	0.000	0.00	0	42.00	A106/BB/	0.00	0.00	0.00	730	400	469	361	0.000	0.000	3.66000	0.00000	0.00000
HD-12.4-09E	2	16.000	0	0.656	0.656	0.000	0.000	0.000	1.50	90	0.00	A234/WPBWPB/	0.00	0.00	0.00	730	400	469	361	0.000	0.000	3.66000	0.00000	0.00000
HD-12.4-10P_1	52	16.000	0	0.656	0.656	0.000	0.000	0.000	0.00	90	240.00	A106/BB/	0.00	0.00	0.00	730	400	469	361	0.000	0.000	3.66000	0.00000	0.00000
HD-12.4-10P_2	9	16.000	0	0.656	0.656	0.000	0.000	0.000	0.00	90	60.00	A106/BB/	0.00	0.00	0.00	730	400	469	361	0.000	0.000	3.66000	0.00000	0.00000
HD-12.4-11E	2	16.000	0	0.656	0.656	0.000	0.000	0.000	1.50	90	0.00	A234/WPBWPB/	0.00	0.00	0.00	730	400	469	361	0.000	0.000	3.66000	0.00000	0.00000
HD-12.4-12P	52	16.000	0	0.656	0.656	0.000	0.000	0.000	0.00	180	42.00	A106/BB/	0.00	0.00	0.00	730	400	469	361	0.000	0.000	3.66000	0.00000	0.00000
HD-12.4-13E	2	16.000	0	0.656	0.656	0.000	0.000	0.000	1.50	90	0.00	A234/WPBWPB/	0.00	0.00	0.00	730	400	469	361	0.000	0.000	3.66000	0.00000	0.00000
HD-12.4-14P	52	16.000	0	0.656	0.656	0.000	0.000	0.000	0.00	90	114.00	A106/BB/	0.00	0.00	0.00	730	400	469	361	0.000	0.000	3.66000	0.00000	0.00000
HD-12.4-15T	15	16.000	0	0.656	0.656	0.000	14.000	0.500	0.00	90	0.00	A234/WPBWPB/	0.00	0.00	0.00	730	400	469	361	0.000	0.000	3.66000	3.66000	0.00000
HD-12.4-16P	65	16.000	0	0.656	0.656	0.000	0.000	0.000	0.00	90	189.00	A106/BB/	0.00	0.00	0.00	730	400	469	361	0.000	0.000	3.66000	0.00000	0.00000
HD-12.4-17E	2	16.000	0	0.656	0.656	0.000	0.000	0.000	1.50	90	0.00	A234/WPBWPB/	0.00	0.00	0.00	730	400	469	361	0.000	0.000	3.66000	0.00000	0.00000
HD-12.4-18P	52	16.000	0	0.656	0.656	0.000	0.000	0.000	0.00	90	107.00	A106/BB/	0.00	0.00	0.00	730	400	469	361	0.000	0.000	3.66000	0.00000	0.00000
Line Name : MSD-01.11A_1 MSEP 33A to HDR																								
MSD-01.11A-01N	31	12.750	0	0.250	0.250	0.000	0.000	0.000	0.00	90	0.00	A106/BB/	0.00	0.00	0.00	250	400	191	0	358.200	0.000	0.00350	0.00000	0.00000
MSD-01.11A-03P	60	12.750	0	0.250	0.250	0.000	0.000	0.000	0.00	95	88.00	A53/BS/	0.00	0.00	0.00	250	400	191	0	358.200	0.000	0.00350	0.00000	0.00000
Line Name : MSD-01.12A MSEP 33A DR HDR																								
MSD-01.12A-01T	12	12.750	0	0.250	0.250	0.000	12.750	0.250	0.00	90	0.00	A234/WPBWPB/	0.00	0.00	0.00	250	400	191	0	358.200	0.000	0.00350	0.00700	0.00350
Line Name : MSD-01.11A_2 MSEP 33A to HDR																								
MSD-01.11A-04N	31	12.750	0	0.250	0.250	0.000	0.000	0.000	0.00	90	0.00	A106/BB/	0.00	0.00	0.00	250	400	191	0	358.200	0.000	0.00350	0.00000	0.00000
MSD-01.11A-08P	61	12.750	0	0.250	0.250	0.000	0.000	0.000	0.00	180	88.00	A53/BS/	0.00	0.00	0.00	250	400	191	0	358.200	0.000	0.00350	0.00000	0.00000
Line Name : MSD-01.11A_3 MSEP 33A to HDR																								
MSD-01.11A-05N	31	12.750	0	0.250	0.250	0.000	0.000	0.000	0.00	90	0.00	A106/BB/	0.00	0.00	0.00	250	400	191	0	358.200	0.000	0.00350	0.00000	0.00000
MSD-01.11A-07P	60	12.750	0	0.250	0.250	0.000	0.000	0.000	0.00	95	44.00	A53/BS/	0.00	0.00	0.00	250	400	191	0	358.200	0.000	0.00350	0.00000	0.00000
Line Name : MSD-01.11B_1 MSEP 33B to HDR																								
MSD-01.11B-01N	31	12.750	0	0.250	0.250	0.000	0.000	0.000	0.00	90	0.00	A106/BB/	0.00	0.00	0.00	250	400	191	0	358.200	0.000	0.00350	0.00000	0.00000
MSD-01.11B-03P	60	12.750	0	0.250	0.250	0.000	0.000	0.000	0.00	95	88.00	A53/BS/	0.00	0.00	0.00	250	400	191	0	358.200	0.000	0.00350	0.00000	0.00000
Line Name : MSD-01.12B MSEP 33B DR HDR																								
MSD-01.12B-01T	12	12.750	0	0.250	0.250	0.000	12.750	0.250	0.00	90	0.00	A234/WPBWPB/	0.00	0.00	0.00	250	400	191	0	358.200	0.000	0.00350	0.00700	0.00350
Line Name : MSD-01.11B_2 MSEP 33B to HDR																								
MSD-01.11B-04N	31	12.750	0	0.250	0.250	0.000	0.000	0.000	0.00	90	0.00	A106/BB/	0.00	0.00	0.00	250	400	191	0	358.200	0.000	0.00350	0.00000	0.00000
MSD-01.11B-08P	61	12.750	0	0.250	0.250	0.000	0.000	0.000	0.00	180	88.00	A53/BS/	0.00	0.00	0.00	250	400	191	0	358.200	0.000	0.00350	0.00000	0.00000
Line Name : MSD-01.11B_3 MSEP 33B to HDR																								
MSD-01.11B-05N	31	12.750	0	0.250	0.250	0.000	0.000	0.000	0.00	90	0.00	A106/BB/	0.00	0.00	0.00	250	400	191	0	358.200	0.000	0.00350	0.00000	0.00000
MSD-01.11B-07P	60	12.750	0	0.250	0.250	0.000	0.000	0.000	0.00	95	44.00	A53/BS/	0.00	0.00	0.00	250	400	191	0	358.200	0.000	0.00350	0.00000	0.00000
Line Name : MSD-01.12A MSEP 33A DR HDR																								
MSD-01.12A-02P	62	12.750	0	0.250	0.250	0.000	0.000	0.000	0.00	90	24.00	A53/BS/	0.00	0.00	0.00	250	400	191	0	358.200	0.000	0.00700	0.00000	0.00000
Line Name : MSD-01.13A HDR to MSEP TK 33A																								
MSD-01.13A-01T	11	12.750	0	0.250	0.250	0.000	12.750	0.250	0.00	90	0.00	A234/WPBWPB/	0.00	0.00	0.00	250	400	191	0	358.200	0.000	0.00350	0.00700	0.01050

Component Name	Geom Code	Pipe Size OD (in)	Sch.	Tnom (in)	Tinit (in)	Tcrit (in)	Br/Small End OD (in)	Br/Small Tnom (in)	R / D Ratio	Orient Angle (Deg.)	Pipe Length (in)	Spec/Type/ Class	Material Cr. (%)	Cu. (%)	Mo. (%)	Design Press. (psig)	Design Temp. (Deg. F)	Op. Press. (psig)	Op. Temp. (Deg. F)	Op. Enth. (Btu/lbm)	Op. Qual.	Flow Rate U/S Mn. (Mlbm/hr)	D/S Mn. (Mlbm/hr)	Br.
Line Name : MSD-01.12B MSEP 33B DR HDR																								
MSD-01.12B-02P	62	12.750	0	0.250	0.250	0.000	0.000	0.000	0.00	90	24.00	A53/BS/	0.00	0.00	0.00	250	400	191	0	358.200	0.000	0.00700	0.00000	0.00000
Line Name : MSD-01.13B HDR to MSEP TK 33B																								
MSD-01.13B-01T	11	12.750	0	0.250	0.250	0.000	12.750	0.250	0.00	90	0.00	A234/WPBWPB/	0.00	0.00	0.00	250	400	191	0	358.200	0.000	0.00700	0.00350	0.01050
Line Name : MSD-01.13A HDR to MSEP TK 33A																								
MSD-01.13A-02P	61	12.750	0	0.250	0.250	0.000	0.000	0.000	0.00	95	32.00	A53/BS/	0.00	0.00	0.00	250	400	191	0	358.200	0.000	0.01050	0.00000	0.00000
MSD-01.13A-03E	2	12.750	0	0.250	0.250	0.000	0.000	0.000	1.00	90	0.00	A234/WPBWPB/	0.00	0.00	0.00	250	400	191	0	358.200	0.000	0.01050	0.00000	0.00000
MSD-01.13A-04V	25	12.750	0	0.250	0.250	0.000	0.000	0.000	0.00	90	0.00	A216/WCBWCB/	0.00	0.00	0.00	250	400	191	0	358.200	0.000	0.01050	0.00000	0.00000
MSD-01.13A-05P	58	12.750	0	0.250	0.250	0.000	0.000	0.000	0.00	90	17.00	A53/BS/	0.00	0.00	0.00	250	400	191	0	358.200	0.000	0.01050	0.00000	0.00000
MSD-01.13A-06V	25	12.750	0	0.250	0.250	0.000	0.000	0.000	0.00	90	0.00	A216/WCBWCB/	0.00	0.00	0.00	250	400	191	0	358.200	0.000	0.01050	0.00000	0.00000
MSD-01.13A-07P	58	12.750	20	0.250	0.268	0.000	0.000	0.000	0.00	90	24.00	A53/BS/	0.00	0.00	0.00	250	400	191	0	358.200	0.000	0.01050	0.00000	0.00000
MSD-01.13A-08E	2	12.750	20	0.250	0.437	0.000	0.000	0.000	1.00	90	0.00	A234/WPBWPB/	0.00	0.00	0.00	250	400	191	0	358.200	0.000	0.01050	0.00000	0.00000
MSD-01.13A-09P	52	12.750	20	0.250	0.382	0.000	0.000	0.000	0.00	90	6.00	A53/BS/	0.00	0.00	0.00	250	400	191	0	358.200	0.000	0.01050	0.00000	0.00000
MSD-01.13A-10N	30	12.750	0	0.250	0.250	0.000	0.000	0.000	0.00	90	0.00	A106/BB/	0.00	0.00	0.00	250	400	191	0	358.200	0.000	0.01050	0.00000	0.00000
Line Name : MSD-01.13B HDR to MSEP TK 33B																								
MSD-01.13B-02P	61	12.750	0	0.250	0.250	0.000	0.000	0.000	0.00	95	32.00	A53/BS/	0.00	0.00	0.00	250	400	191	0	358.200	0.000	0.01050	0.00000	0.00000
MSD-01.13B-03E	2	12.750	0	0.250	0.250	0.000	0.000	0.000	1.00	90	0.00	A234/WPBWPB/	0.00	0.00	0.00	250	400	191	0	358.200	0.000	0.01050	0.00000	0.00000
MSD-01.13B-04V	25	12.750	0	0.250	0.250	0.000	0.000	0.000	0.00	90	0.00	A216/WCBWCB/	0.00	0.00	0.00	250	400	191	0	358.200	0.000	0.01050	0.00000	0.00000
MSD-01.13B-05P	58	12.750	0	0.250	0.250	0.000	0.000	0.000	0.00	90	17.00	A53/BS/	0.00	0.00	0.00	250	400	191	0	358.200	0.000	0.01050	0.00000	0.00000
MSD-01.13B-06V	25	12.750	0	0.250	0.250	0.000	0.000	0.000	0.00	90	0.00	A216/WCBWCB/	0.00	0.00	0.00	250	400	191	0	358.200	0.000	0.01050	0.00000	0.00000
MSD-01.13B-07P	58	12.750	0	0.250	0.250	0.000	0.000	0.000	0.00	90	24.00	A53/BS/	0.00	0.00	0.00	250	400	191	0	358.200	0.000	0.01050	0.00000	0.00000
MSD-01.13B-08E	2	12.750	0	0.250	0.250	0.000	0.000	0.000	1.00	90	0.00	A234/WPBWPB/	0.00	0.00	0.00	250	400	191	0	358.200	0.000	0.01050	0.00000	0.00000
MSD-01.13B-09P	52	12.750	0	0.250	0.250	0.000	0.000	0.000	0.00	90	6.00	A53/BS/	0.00	0.00	0.00	250	400	191	0	358.200	0.000	0.01050	0.00000	0.00000
MSD-01.13B-10N	30	12.750	0	0.250	0.250	0.000	0.000	0.000	0.00	90	0.00	A106/BB/	0.00	0.00	0.00	250	400	191	0	358.200	0.000	0.01050	0.00000	0.00000
Line Name : MSD-01.14A TK 33A to HD TK																								
MSD-01.14A-01N	31	8.625	0	0.322	0.322	0.000	0.000	0.000	0.00	90	0.00	A106/BB/	0.00	0.00	0.00	250	400	191	0	358.200	0.000	0.01050	0.00000	0.00000
MSD-01.14A-02P	61	8.625	0	0.322	0.322	0.000	0.000	0.000	0.00	180	23.00	A335/P11P11/	0.00	0.00	0.00	250	400	191	0	358.200	0.000	0.01050	0.00000	0.00000
MSD-01.14A-03T	15	8.625	0	0.322	0.322	0.000	6.625	0.280	0.00	90	0.00	A335/P11P11/	0.00	0.00	0.00	250	400	191	0	358.200	0.000	0.01050	0.01050	0.00000
MSD-01.14A-04P	65	8.625	40	0.322	0.324	0.000	0.000	0.000	0.00	180	63.00	A335/P11P11/	0.00	0.00	0.00	250	400	191	0	358.200	0.000	0.01050	0.00000	0.00000
MSD-01.15A-01E	16	8.625	40	0.322	0.000	0.000	6.625	0.280	1.50	90	0.00	A182/F11F11/	0.00	0.00	0.00	250	400	191	0	358.200	0.000	0.01050	0.01050	0.00000
MSD-01.15A-02V	25	6.625	0	0.280	0.280	0.000	0.000	0.000	0.00	90	0.00	A217/WC6WC6/	0.00	0.00	0.00	250	400	191	0	358.200	0.000	0.01050	0.00000	0.00000
MSD-01.15A-03P	58	6.625	0	0.280	0.280	0.000	0.000	0.000	0.00	90	29.00	A335/P11P11/	0.00	0.00	0.00	250	400	191	0	358.200	0.000	0.01050	0.00000	0.00000
MSD-01.15A-04E	2	6.625	40	0.280	0.341	0.000	0.000	0.000	1.50	90	0.00	A182/F11F11/	0.00	0.00	0.00	250	400	191	0	358.200	0.000	0.01050	0.00000	0.00000
MSD-01.15A-05E	4	6.625	40	0.280	0.322	0.000	0.000	0.000	1.00	90	0.00	A182/F11F11/	0.00	0.00	0.00	250	400	191	0	358.200	0.000	0.01050	0.00000	0.00000
MSD-01.15A-06P	54	6.625	40	0.280	0.285	0.000	0.000	0.000	0.00	180	89.00	A335/P11P11/	0.00	0.00	0.00	250	400	191	0	358.200	0.000	0.01050	0.00000	0.00000
MSD-01.15A-07E	2	6.625	0	0.280	0.280	0.000	0.000	0.000	1.50	90	0.00	A182/F11F11/	0.00	0.00	0.00	250	400	191	0	358.200	0.000	0.01050	0.00000	0.00000
MSD-01.15A-08P	52	6.625	0	0.280	0.280	0.000	0.000	0.000	0.00	90	99.38	A335/P11P11/	0.00	0.00	0.00	250	400	191	0	358.200	0.000	0.01050	0.00000	0.00000
MSD-01.15A-21P	9	6.625	40	0.280	0.000	0.000	0.000	0.000	0.00	90	67.63	A335/P11P11/	0.00	0.00	0.00	250	400	191	0	358.200	0.000	0.01050	0.00000	0.00000
MSD-01.15A-09E	2	6.625	40	0.280	0.302	0.000	0.000	0.000	1.50	90	0.00	A182/F11F11/	0.00	0.00	0.00	250	400	191	0	358.200	0.000	0.01050	0.00000	0.00000
MSD-01.15A-10P	52	6.625	40	0.280	0.306	0.000	0.000	0.000	0.00	90	61.00	A335/P11P11/	0.00	0.00	0.00	250	400	191	0	358.200	0.000	0.01050	0.00000	0.00000
MSD-01.15A-11E	2	6.625	40	0.280	0.290	0.000	0.000	0.000	1.50	90	0.00	A182/F11F11/	0.00	0.00	0.00	250	400	191	0	358.200	0.000	0.01050	0.00000	0.00000
MSD-01.15A-12P	52	6.625	40	0.280	0.272	0.000	0.000	0.000	0.00	180	55.00	A335/P11P11/	0.00	0.00	0.00	250	400	191	0	358.200	0.000	0.01050	0.00000	0.00000
MSD-01.15A-13E	2	6.625	40	0.280	0.334	0.000	0.000	0.000	1.50	90	0.00	A182/F11F11/	0.00	0.00	0.00	250	400	191	0	358.200	0.000	0.01050	0.00000	0.00000
MSD-01.15A-14P	52	6.625	40	0.280	0.281	0.000	0.000	0.000	0.00	90	99.38	A335/P11P11/	0.00	0.00	0.00	250	400	191	0	358.200	0.000	0.01050	0.00000	0.00000
MSD-01.15A-22P	9	6.625	40	0.280	0.281	0.000	0.000	0.000	0.00	90	151.63	A335/P11P11/	0.00	0.00	0.00	250	400	191	0	358.200	0.000	0.01050	0.00000	0.00000
MSD-01.15A-15E	2	6.625	40	0.280	0.331	0.000	0.000	0.000	1.50	90	0.00	A182/F11F11/	0.00	0.00	0.00	250	400	191	0	358.200	0.000	0.01050	0.00000	0.00000
MSD-01.15A-16P	52	6.625	40	0.280	0.284	0.000	0.000	0.000	0.00	90	99.00	A335/P11P11/	0.00	0.00	0.00	250	400	191	0	358.200	0.000	0.01050	0.00000	0.00000
MSD-01.15A-17E	2	6.625	0	0.280	0.280	0.000	0.000	0.000	1.50	90	0.00	A182/F11F11/	0.00	0.00	0.00	250	400	191	0	358.200	0.000	0.01050	0.00000	0.00000
MSD-01.15A-18P	52	6.625	0	0.280	0.280	0.000	0.000	0.000	0.00	180	42.00	A335/P11P11/	0.00	0.00	0.00	250	400	191	0	358.200	0.000	0.01050	0.00000	0.00000
MSD-01.15A-19E	2	6.625	0	0.280	0.280	0.000	0.000	0.000	1.50	90	0.00	A182/F11F11/	0.00	0.00	0.00	250	400	191	0	358.200	0.000	0.01050	0.00000	0.00000

Component Name	Geom Code	Pipe Size OD (in)	Sch.	Tnom (in)	Tinit (in)	Tcrit (in)	Br/Small End OD (in)	Br/Small Tnom (in)	R / D Ratio	Orient Angle (Deg.)	Pipe Length (in)	Spec/Type/ Class	Material Cr. (%)	Cu. (%)	Mo. (%)	Design Press. (psig)	Design Temp. (Deg. F)	Op. Press. (psig)	Op. Temp. (Deg. F)	Op. Enth. (Btu/lbm)	Op. Qual.	Flow Rate U/S Mn. (Mlbm/hr)	D/S Mn. (Mlbm/hr)	Br.
MSD-01.15A-20N	30	6.625	0	0.280	0.280	0.000	0.000	0.000	0.00	90	0.00	A106/BB/	0.00	0.00	0.00	250	400	191	0	358.200	0.000	0.01050	0.00000	0.00000
Line Name : MSD-01.14B TK 33B to HD TK																								
MSD-01.14B-01N	31	8.625	0	0.322	0.322	0.000	0.000	0.000	0.00	90	0.00	A106/BB/	0.00	0.00	0.00	250	400	191	0	358.200	0.000	0.01050	0.00000	0.00000
MSD-01.14B-02P	61	8.625	0	0.322	0.322	0.000	0.000	0.000	0.00	180	23.00	A335/P11P11/	0.00	0.00	0.00	250	400	191	0	358.200	0.000	0.01050	0.00000	0.00000
MSD-01.14B-03T	15	8.625	0	0.322	0.322	0.000	6.625	0.280	0.00	90	0.00	A335/P11P11/	0.00	0.00	0.00	250	400	191	0	358.200	0.000	0.01050	0.01050	0.00000
MSD-01.14B-04P	65	8.625	0	0.322	0.322	0.000	0.000	0.000	0.00	180	24.00	A335/P11P11/	0.00	0.00	0.00	250	400	191	0	358.200	0.000	0.01050	0.00000	0.00000
MSD-01.15B-01E	16	8.625	40	0.322	0.000	0.000	6.625	0.280	1.50	90	0.00	A182/F11F11/	0.00	0.00	0.00	250	400	191	0	358.200	0.000	0.01050	0.01050	0.00000
MSD-01.15B-02E	4	6.625	0	0.280	0.280	0.000	0.000	0.000	1.50	90	0.00	A182/F11F11/	0.00	0.00	0.00	250	400	191	0	358.200	0.000	0.01050	0.00000	0.00000
MSD-01.15B-03P	54	6.625	0	0.280	0.280	0.000	0.000	0.000	0.00	180	30.00	A335/P11P11/	0.00	0.00	0.00	250	400	191	0	358.200	0.000	0.01050	0.00000	0.00000
MSD-01.15B-04E	2	6.625	0	0.280	0.280	0.000	0.000	0.000	1.50	90	0.00	A182/F11F11/	0.00	0.00	0.00	250	400	191	0	358.200	0.000	0.01050	0.00000	0.00000
MSD-01.15B-05V	25	6.625	0	0.280	0.280	0.000	0.000	0.000	0.00	90	0.00	A217/WC6WC6/	0.00	0.00	0.00	250	400	191	0	358.200	0.000	0.01050	0.00000	0.00000
MSD-01.15B-06P	58	6.625	40	0.280	0.265	0.000	0.000	0.000	0.00	90	5.00	A335/P11P11/	0.00	0.00	0.00	250	400	191	0	358.200	0.000	0.01050	0.00000	0.00000
MSD-01.15B-07E	4	6.625	40	0.280	0.309	0.000	0.000	0.000	1.50	90	0.00	A182/F11F11/	0.00	0.00	0.00	250	400	191	0	358.200	0.000	0.01050	0.00000	0.00000
MSD-01.15B-08P	54	6.625	40	0.280	0.299	0.000	0.000	0.000	0.00	180	62.00	A335/P11P11/	0.00	0.00	0.00	250	400	191	0	358.200	0.000	0.01050	0.00000	0.00000
MSD-01.15B-09E	2	6.625	0	0.280	0.280	0.000	0.000	0.000	1.50	90	0.00	A182/F11F11/	0.00	0.00	0.00	250	400	191	0	358.200	0.000	0.01050	0.00000	0.00000
MSD-01.15B-10P	52	6.625	0	0.280	0.280	0.000	0.000	0.000	0.00	90	13.00	A335/P11P11/	0.00	0.00	0.00	250	400	191	0	358.200	0.000	0.01050	0.00000	0.00000
MSD-01.15B-11E	1	6.625	0	0.280	0.280	0.000	0.000	0.000	1.50	90	0.00	A182/F11F11/	0.00	0.00	0.00	250	400	191	0	358.200	0.000	0.01050	0.00000	0.00000
MSD-01.15B-12P_1	51	6.625	0	0.280	0.280	0.000	0.000	0.000	0.00	90	41.25	A335/P11P11/	0.00	0.00	0.00	250	400	191	0	358.200	0.000	0.01050	0.00000	0.00000
MSD-01.15B-12P_2	52	6.625	0	0.280	0.280	0.000	0.000	0.000	0.00	90	58.13	A53/BS/	0.00	0.00	0.00	250	400	191	0	358.200	0.000	0.01050	0.00000	0.00000
MSD-01.15B-30P	9	6.625	0	0.280	0.280	0.000	0.000	0.000	0.00	90	313.38	A53/BS/	0.00	0.00	0.00	250	400	191	0	358.200	0.000	0.01050	0.00000	0.00000
MSD-01.15B-13E	2	6.625	0	0.280	0.280	0.000	0.000	0.000	1.50	90	0.00	A234/WPBWPB/	0.00	0.00	0.00	250	400	191	0	358.200	0.000	0.01050	0.00000	0.00000
MSD-01.15B-14P	52	6.625	0	0.280	0.280	0.000	0.000	0.000	0.00	180	37.00	A53/BS/	0.00	0.00	0.00	250	400	191	0	358.200	0.000	0.01050	0.00000	0.00000
MSD-01.15B-15E	2	6.625	0	0.280	0.280	0.000	0.000	0.000	1.50	90	0.00	A234/WPBWPB/	0.00	0.00	0.00	250	400	191	0	358.200	0.000	0.01050	0.00000	0.00000
MSD-01.15B-16P	52	6.625	0	0.280	0.280	0.000	0.000	0.000	0.00	90	99.38	A53/BS/	0.00	0.00	0.00	250	400	191	0	358.200	0.000	0.01050	0.00000	0.00000
MSD-01.15B-31P_1	9	6.625	0	0.280	0.280	0.000	0.000	0.000	0.00	90	782.13	A53/BS/	0.00	0.00	0.00	250	400	191	0	358.200	0.000	0.01050	0.00000	0.00000
MSD-01.15B-31P_2	9	6.625	0	0.280	0.280	0.000	0.000	0.000	0.00	90	92.25	A335/P11P11/	0.00	0.00	0.00	250	400	191	0	358.200	0.000	0.01050	0.00000	0.00000
MSD-01.15B-17E	1	6.625	0	0.280	0.280	0.000	0.000	0.000	1.50	90	0.00	A182/F11F11/	0.00	0.00	0.00	250	400	191	0	358.200	0.000	0.01050	0.00000	0.00000
MSD-01.15B-18P	51	6.625	0	0.280	0.280	0.000	0.000	0.000	0.00	90	48.00	A335/P11P11/	0.00	0.00	0.00	250	400	191	0	358.200	0.000	0.01050	0.00000	0.00000
MSD-01.15B-19E	1	6.625	0	0.280	0.280	0.000	0.000	0.000	1.50	90	0.00	A182/F11F11/	0.00	0.00	0.00	250	400	191	0	358.200	0.000	0.01050	0.00000	0.00000
MSD-01.15B-20P	51	6.625	0	0.280	0.280	0.000	0.000	0.000	0.00	90	73.00	A335/P11P11/	0.00	0.00	0.00	250	400	191	0	358.200	0.000	0.01050	0.00000	0.00000
MSD-01.15B-21E	1	6.625	0	0.280	0.280	0.000	0.000	0.000	1.50	90	0.00	A182/F11F11/	0.00	0.00	0.00	250	400	191	0	358.200	0.000	0.01050	0.00000	0.00000
MSD-01.15B-22P	51	6.625	0	0.280	0.280	0.000	0.000	0.000	0.00	90	54.00	A335/P11P11/	0.00	0.00	0.00	250	400	191	0	358.200	0.000	0.01050	0.00000	0.00000
MSD-01.15B-23E	1	6.625	0	0.280	0.280	0.000	0.000	0.000	1.50	90	0.00	A182/F11F11/	0.00	0.00	0.00	250	400	191	0	358.200	0.000	0.01050	0.00000	0.00000
MSD-01.15B-24P	51	6.625	0	0.280	0.280	0.000	0.000	0.000	0.00	90	99.38	A335/P11P11/	0.00	0.00	0.00	250	400	191	0	358.200	0.000	0.01050	0.00000	0.00000
MSD-01.15B-32P	9	6.625	0	0.280	0.280	0.000	0.000	0.000	0.00	90	137.63	A335/P11P11/	0.00	0.00	0.00	250	400	191	0	358.200	0.000	0.01050	0.00000	0.00000
MSD-01.15B-25E	2	6.625	0	0.280	0.280	0.000	0.000	0.000	1.50	90	0.00	A182/F11F11/	0.00	0.00	0.00	250	400	191	0	358.200	0.000	0.01050	0.00000	0.00000
MSD-01.15B-26P	52	6.625	40	0.280	0.278	0.000	0.000	0.000	0.00	180	42.00	A335/P11P11/	0.00	0.00	0.00	250	400	191	0	358.200	0.000	0.01050	0.00000	0.00000
MSD-01.15B-27E	2	6.625	40	0.280	0.341	0.000	0.000	0.000	1.50	90	0.00	A182/F11F11/	0.00	0.00	0.00	250	400	191	0	358.200	0.000	0.01050	0.00000	0.00000
MSD-01.15B-28P	52	6.625	40	0.280	0.282	0.000	0.000	0.000	0.00	90	6.00	A335/P11P11/	0.00	0.00	0.00	250	400	191	0	358.200	0.000	0.01050	0.00000	0.00000
MSD-01.15B-29N	30	6.625	0	0.280	0.280	0.000	0.000	0.000	0.00	90	0.00	A106/BB/	0.00	0.00	0.00	250	400	191	0	358.200	0.000	0.01050	0.00000	0.00000
Line Name : MSD-01.1A_1 MSEP 31A to HDR																								
MSD-01.1A-01N	31	12.750	0	0.250	0.250	0.000	0.000	0.000	0.00	90	0.00	A106/BB/	0.00	0.00	0.00	250	400	191	0	358.200	0.000	0.00350	0.00000	0.00000
MSD-01.1A-03P	60	12.750	0	0.250	0.250	0.000	0.000	0.000	0.00	95	88.00	A53/BS/	0.00	0.00	0.00	250	400	191	0	358.200	0.000	0.00350	0.00000	0.00000
Line Name : MSD-01.2A MSEP 31A DR HDR																								
MSD-01.2A-01T	12	12.750	0	0.250	0.250	0.000	12.750	0.250	0.00	90	0.00	A234/WPBWPB/	0.00	0.00	0.00	250	400	191	0	358.200	0.000	0.00350	0.00700	0.00350
Line Name : MSD-01.1A_2 MSEP 31A to HDR																								
MSD-01.1A-04N	31	12.750	0	0.250	0.250	0.000	0.000	0.000	0.00	90	0.00	A106/BB/	0.00	0.00	0.00	250	400	191	0	358.200	0.000	0.00350	0.00000	0.00000
MSD-01.1A-08P	61	12.750	0	0.250	0.250	0.000	0.000	0.000	0.00	180	6.00	A53/BS/	0.00	0.00	0.00	250	400	191	0	358.200	0.000	0.00350	0.00000	0.00000
Line Name : MSD-01.1A_3 MSEP 31A to HDR																								
MSD-01.1A-05N	31	12.750	0	0.250	0.250	0.000	0.000	0.000	0.00	90	0.00	A106/BB/	0.00	0.00	0.00	250	400	191	0	358.200	0.000	0.00350	0.00000	0.00000
MSD-01.1A-07P	60	12.750	0	0.250	0.250	0.000	0.000	0.000	0.00	95	68.00	A53/BS/	0.00	0.00	0.00	250	400	191	0	358.200	0.000	0.00350	0.00000	0.00000

Component Name	Geom Code	Pipe Size OD (in)	Sch.	Tnom (in)	Tinit (in)	Tcrit (in)	Br/Small End OD (in)	Br/Small Tnom (in)	R / D Ratio	Orient Angle (Deg.)	Pipe Length (in)	Spec/Type/ Class	Material Cr. (%)	Cu. (%)	Mo. (%)	Design Press. (psig)	Design Temp. (Deg. F)	Op. Press. (psig)	Op. Temp. (Deg. F)	Op. Enth. (Btu/lbm)	Op. Qual.	Flow Rate U/S Mn. (Mlbm/hr)	D/S Mn. (Mlbm/hr)	Br.
Line Name : MSD-01.1B_1 MSEP 31B to HDR																								
MSD-01.1B-01N	31	12.750	0	0.250	0.250	0.000	0.000	0.000	0.00	90	0.00	A106/BB/	0.00	0.00	0.00	250	400	191	0	358.200	0.000	0.00350	0.00000	0.00000
MSD-01.1B-03P	60	12.750	0	0.250	0.250	0.000	0.000	0.000	0.00	95	88.00	A53/BS/	0.00	0.00	0.00	250	400	191	0	358.200	0.000	0.00350	0.00000	0.00000
Line Name : MSD-01.2B MSEP 31B DR HDR																								
MSD-01.2B-01T	12	12.750	0	0.250	0.250	0.000	12.750	0.250	0.00	90	0.00	A234/WPBWPB/	0.00	0.00	0.00	250	400	191	0	358.200	0.000	0.00350	0.00700	0.00350
Line Name : MSD-01.1B_2 MSEP 31B to HDR																								
MSD-01.1B-04N	31	12.750	0	0.250	0.250	0.000	0.000	0.000	0.00	90	0.00	A106/BB/	0.00	0.00	0.00	250	400	191	0	358.200	0.000	0.00350	0.00000	0.00000
MSD-01.1B-08P	61	12.750	0	0.250	0.250	0.000	0.000	0.000	0.00	180	88.00	A53/BS/	0.00	0.00	0.00	250	400	191	0	358.200	0.000	0.00350	0.00000	0.00000
Line Name : MSD-01.1B_3 MSEP 31B to HDR																								
MSD-01.1B-05N	31	12.750	0	0.250	0.250	0.000	0.000	0.000	0.00	90	0.00	A106/BB/	0.00	0.00	0.00	250	400	191	0	358.200	0.000	0.00350	0.00000	0.00000
MSD-01.1B-07P	60	12.750	0	0.250	0.250	0.000	0.000	0.000	0.00	95	68.00	A53/BS/	0.00	0.00	0.00	250	400	191	0	358.200	0.000	0.00350	0.00000	0.00000
Line Name : MSD-01.3A HDR to MSEP TK 31A																								
MSD-01.3A-01T	11	12.750	0	0.250	0.250	0.000	12.750	0.250	0.00	90	0.00	A234/WPBWPB/	0.00	0.00	0.00	250	400	191	0	358.200	0.000	0.00700	0.00350	0.01050
Line Name : MSD-01.3B HDR to MSEP TK 31B																								
MSD-01.3B-01T	11	12.750	0	0.250	0.250	0.000	12.750	0.250	0.00	90	0.00	A234/WPBWPB/	0.00	0.00	0.00	250	400	191	0	358.200	0.000	0.00700	0.00350	0.01050
Line Name : MSD-01.3A HDR to MSEP TK 31A																								
MSD-01.3A-02P	61	12.750	0	0.250	0.250	0.000	0.000	0.000	0.00	95	32.00	A53/BS/	0.00	0.00	0.00	250	400	191	0	358.200	0.000	0.01050	0.00000	0.00000
MSD-01.3A-03E	2	12.750	0	0.250	0.250	0.000	0.000	0.000	1.00	90	0.00	A234/WPBWPB/	0.00	0.00	0.00	250	400	191	0	358.200	0.000	0.01050	0.00000	0.00000
MSD-01.3A-04V	25	12.750	0	0.250	0.250	0.000	0.000	0.000	0.00	90	0.00	A216/WCBWCB/	0.00	0.00	0.00	250	400	191	0	358.200	0.000	0.01050	0.00000	0.00000
MSD-01.3A-05P	58	12.750	0	0.250	0.250	0.000	0.000	0.000	0.00	90	6.00	A53/BS/	0.00	0.00	0.00	250	400	191	0	358.200	0.000	0.01050	0.00000	0.00000
MSD-01.3A-06V	25	12.750	0	0.250	0.250	0.000	0.000	0.000	0.00	90	0.00	A216/WCBWCB/	0.00	0.00	0.00	250	400	191	0	358.200	0.000	0.01050	0.00000	0.00000
MSD-01.3A-07P	58	12.750	0	0.250	0.250	0.000	0.000	0.000	0.00	90	6.00	A53/BS/	0.00	0.00	0.00	250	400	191	0	358.200	0.000	0.01050	0.00000	0.00000
MSD-01.3A-08N	30	12.750	0	0.250	0.250	0.000	0.000	0.000	0.00	90	0.00	A106/BB/	0.00	0.00	0.00	250	400	191	0	358.200	0.000	0.01050	0.00000	0.00000
Line Name : MSD-01.3B HDR to MSEP TK 31B																								
MSD-01.3B-02P	61	12.750	0	0.250	0.250	0.000	0.000	0.000	0.00	95	32.00	A53/BS/	0.00	0.00	0.00	250	400	191	0	358.200	0.000	0.01050	0.00000	0.00000
MSD-01.3B-03E	2	12.750	0	0.250	0.250	0.000	0.000	0.000	1.00	90	0.00	A234/WPBWPB/	0.00	0.00	0.00	250	400	191	0	358.200	0.000	0.01050	0.00000	0.00000
MSD-01.3B-04V	25	12.750	0	0.250	0.250	0.000	0.000	0.000	0.00	90	0.00	A216/WCBWCB/	0.00	0.00	0.00	250	400	191	0	358.200	0.000	0.01050	0.00000	0.00000
MSD-01.3B-05P	58	12.750	0	0.250	0.250	0.000	0.000	0.000	0.00	90	6.00	A53/BS/	0.00	0.00	0.00	250	400	191	0	358.200	0.000	0.01050	0.00000	0.00000
MSD-01.3B-06V	25	12.750	0	0.250	0.250	0.000	0.000	0.000	0.00	90	0.00	A216/WCBWCB/	0.00	0.00	0.00	250	400	191	0	358.200	0.000	0.01050	0.00000	0.00000
MSD-01.3B-07P	58	12.750	0	0.250	0.250	0.000	0.000	0.000	0.00	90	6.00	A53/BS/	0.00	0.00	0.00	250	400	191	0	358.200	0.000	0.01050	0.00000	0.00000
MSD-01.3B-08N	30	12.750	0	0.250	0.250	0.000	0.000	0.000	0.00	90	0.00	A106/BB/	0.00	0.00	0.00	250	400	191	0	358.200	0.000	0.01050	0.00000	0.00000
Line Name : MSD-01.4A TK 31A to HD TK																								
MSD-01.4A-01N	31	8.625	0	0.322	0.322	0.000	0.000	0.000	0.00	90	0.00	A106/BB/	0.00	0.00	0.00	250	400	191	0	358.200	0.000	0.01050	0.00000	0.00000
MSD-01.4A-02P	61	8.625	0	0.322	0.322	0.000	0.000	0.000	0.00	180	30.00	A335/P11P11/	0.00	0.00	0.00	250	400	191	0	358.200	0.000	0.01050	0.00000	0.00000
MSD-01.4A-03T	15	8.625	0	0.322	0.322	0.000	6.625	0.280	0.00	90	0.00	A335/P11P11/	0.00	0.00	0.00	250	400	191	0	358.200	0.000	0.01050	0.01050	0.00000
MSD-01.4A-04P	65	8.625	40	0.322	0.349	0.000	0.000	0.000	0.00	180	22.00	A335/P11P11/	0.00	0.00	0.00	250	400	191	0	358.200	0.000	0.01050	0.00000	0.00000
MSD-01.5A-01E	16	8.625	40	0.322	0.000	0.000	6.625	0.280	1.50	90	0.00	A182/F11F11/	0.00	0.00	0.00	250	400	191	0	358.200	0.000	0.01050	0.01050	0.00000
MSD-01.5A-02P	66	6.625	40	0.280	0.314	0.000	0.000	0.000	0.00	90	40.00	A335/P11P11/	0.00	0.00	0.00	250	400	191	0	358.200	0.000	0.01050	0.00000	0.00000
MSD-01.5A-03E	2	6.625	0	0.280	0.280	0.000	0.000	0.000	1.50	90	0.00	A182/F11F11/	0.00	0.00	0.00	250	400	191	0	358.200	0.000	0.01050	0.00000	0.00000

Component Name	Geom Code	Pipe Size OD (in)	Sch.	Tnom (in)	Tinit (in)	Tcrit (in)	Br/Small End OD (in)	Br/Small Tnom (in)	R / D Ratio	Orient Angle (Deg.)	Pipe Length (in)	Spec/Type/ Class	Material Cr. (%)	Cu. (%)	Mo. (%)	Design Press. (psig)	Design Temp. (Deg. F)	Op. Press. (psig)	Op. Temp. (Deg. F)	Op. Enth. (Btu/lbm)	Op. Qual.	Flow Rate U/S Mn. (Mlbm/hr)	D/S Mn. (Mlbm/hr)	Br.
MSD-01.5A-04P	52	6.625	40	0.280	0.349	0.000	0.000	0.000	0.00	180	10.00	A335/P11P11/	0.00	0.00	0.00	250	400	191	0	358.200	0.000	0.01050	0.00000	0.00000
MSD-01.5A-05E	2	6.625	40	0.280	0.319	0.000	0.000	0.000	1.50	90	0.00	A182/F11F11/	0.00	0.00	0.00	250	400	191	0	358.200	0.000	0.01050	0.00000	0.00000
MSD-01.5A-06V	25	6.625	0	0.280	0.280	0.000	0.000	0.000	0.00	90	0.00	A217/WC6WC6/	0.00	0.00	0.00	250	400	191	0	358.200	0.000	0.01050	0.00000	0.00000
MSD-01.5A-07P	58	6.625	40	0.280	0.289	0.000	0.000	0.000	0.00	90	6.00	A335/P11P11/	0.00	0.00	0.00	250	400	191	0	358.200	0.000	0.01050	0.00000	0.00000
MSD-01.5A-08E	4	6.625	40	0.280	0.319	0.000	0.000	0.000	1.50	90	0.00	A182/F11F11/	0.00	0.00	0.00	250	400	191	0	358.200	0.000	0.01050	0.00000	0.00000
MSD-01.5A-09P	54	6.625	40	0.280	0.317	0.000	0.000	0.000	0.00	180	36.00	A335/P11P11/	0.00	0.00	0.00	250	400	191	0	358.200	0.000	0.01050	0.00000	0.00000
MSD-01.5A-10E	2	6.625	0	0.280	0.280	0.000	0.000	0.000	1.50	90	0.00	A182/F11F11/	0.00	0.00	0.00	250	400	191	0	358.200	0.000	0.01050	0.00000	0.00000
MSD-01.5A-11P	52	6.625	0	0.280	0.280	0.000	0.000	0.000	0.00	90	79.00	A335/P11P11/	0.00	0.00	0.00	250	400	191	0	358.200	0.000	0.01050	0.00000	0.00000
MSD-01.5A-12E	2	6.625	0	0.280	0.280	0.000	0.000	0.000	1.50	90	0.00	A182/F11F11/	0.00	0.00	0.00	250	400	191	0	358.200	0.000	0.01050	0.00000	0.00000
MSD-01.5A-13P	52	6.625	0	0.280	0.280	0.000	0.000	0.000	0.00	180	9.00	A335/P11P11/	0.00	0.00	0.00	250	400	191	0	358.200	0.000	0.01050	0.00000	0.00000
MSD-01.5A-14E	2	6.625	0	0.280	0.280	0.000	0.000	0.000	1.50	90	0.00	A182/F11F11/	0.00	0.00	0.00	250	400	191	0	358.200	0.000	0.01050	0.00000	0.00000
MSD-01.5A-15P_1	52	6.625	0	0.280	0.280	0.000	0.000	0.000	0.00	90	81.00	A335/P11P11/	0.00	0.00	0.00	250	400	191	0	358.200	0.000	0.01050	0.00000	0.00000
MSD-01.5A-15P_2	52	6.625	0	0.280	0.280	0.000	0.000	0.000	0.00	90	18.38	A53/BS/	0.00	0.00	0.00	250	400	191	0	358.200	0.000	0.01050	0.00000	0.00000
MSD-01.5A-28P_1	9	6.625	0	0.280	0.280	0.000	0.000	0.000	0.00	90	923.63	A53/BS/	0.00	0.00	0.00	250	400	191	0	358.200	0.000	0.01050	0.00000	0.00000
MSD-01.5A-28P_2	9	6.625	0	0.280	0.280	0.000	0.000	0.000	0.00	90	138.00	A335/P11P11/	0.00	0.00	0.00	250	400	191	0	358.200	0.000	0.01050	0.00000	0.00000
MSD-01.5A-16E	2	6.625	0	0.280	0.280	0.000	0.000	0.000	1.50	90	0.00	A182/F11F11/	0.00	0.00	0.00	250	400	191	0	358.200	0.000	0.01050	0.00000	0.00000
MSD-01.5A-17P	52	6.625	0	0.280	0.280	0.000	0.000	0.000	0.00	90	31.00	A335/P11P11/	0.00	0.00	0.00	250	400	191	0	358.200	0.000	0.01050	0.00000	0.00000
MSD-01.5A-18E	2	6.625	0	0.280	0.280	0.000	0.000	0.000	1.50	90	0.00	A182/F11F11/	0.00	0.00	0.00	250	400	191	0	358.200	0.000	0.01050	0.00000	0.00000
MSD-01.5A-19P	52	6.625	0	0.280	0.280	0.000	0.000	0.000	0.00	180	55.00	A335/P11P11/	0.00	0.00	0.00	250	400	191	0	358.200	0.000	0.01050	0.00000	0.00000
MSD-01.5A-20E	2	6.625	0	0.280	0.280	0.000	0.000	0.000	1.50	90	0.00	A182/F11F11/	0.00	0.00	0.00	250	400	191	0	358.200	0.000	0.01050	0.00000	0.00000
MSD-01.5A-21P	52	6.625	0	0.280	0.280	0.000	0.000	0.000	0.00	90	99.38	A335/P11P11/	0.00	0.00	0.00	250	400	191	0	358.200	0.000	0.01050	0.00000	0.00000
MSD-01.5A-29P	9	6.625	0	0.280	0.280	0.000	0.000	0.000	0.00	90	61.63	A335/P11P11/	0.00	0.00	0.00	250	400	191	0	358.200	0.000	0.01050	0.00000	0.00000
MSD-01.5A-22E	2	6.625	0	0.280	0.280	0.000	0.000	0.000	1.50	90	0.00	A182/F11F11/	0.00	0.00	0.00	250	400	191	0	358.200	0.000	0.01050	0.00000	0.00000
MSD-01.5A-23P	52	6.625	40	0.280	0.314	0.000	0.000	0.000	0.00	90	69.00	A335/P11P11/	0.00	0.00	0.00	250	400	191	0	358.200	0.000	0.01050	0.00000	0.00000
MSD-01.5A-24E	2	6.625	40	0.280	0.302	0.000	0.000	0.000	1.50	90	0.00	A182/F11F11/	0.00	0.00	0.00	250	400	191	0	358.200	0.000	0.01050	0.00000	0.00000
MSD-01.5A-25P	52	6.625	40	0.280	0.318	0.000	0.000	0.000	0.00	180	42.00	A335/P11P11/	0.00	0.00	0.00	250	400	191	0	358.200	0.000	0.01050	0.00000	0.00000
MSD-01.5A-26E	2	6.625	0	0.280	0.280	0.000	0.000	0.000	1.50	90	0.00	A182/F11F11/	0.00	0.00	0.00	250	400	191	0	358.200	0.000	0.01050	0.00000	0.00000
MSD-01.5A-27N	30	6.625	0	0.280	0.280	0.000	0.000	0.000	0.00	90	0.00	A106/BB/	0.00	0.00	0.00	250	400	191	0	358.200	0.000	0.01050	0.00000	0.00000

Line Name : MSD-01.4B TK 31B to HD TK

MSD-01.4B-01N	31	8.625	0	0.322	0.322	0.000	0.000	0.000	0.00	90	0.00	A106/BB/	0.00	0.00	0.00	250	400	191	0	358.200	0.000	0.01050	0.00000	0.00000
MSD-01.4B-02P	61	8.625	0	0.322	0.322	0.000	0.000	0.000	0.00	180	13.00	A335/P11P11/	0.00	0.00	0.00	250	400	191	0	358.200	0.000	0.01050	0.00000	0.00000
MSD-01.4B-03E	2	8.625	0	0.322	0.322	0.000	0.000	0.000	1.50	90	0.00	A182/F11F11/	0.00	0.00	0.00	250	400	191	0	358.200	0.000	0.01050	0.00000	0.00000
MSD-01.4B-04P	52	8.625	0	0.322	0.322	0.000	0.000	0.000	0.00	90	26.00	A335/P11P11/	0.00	0.00	0.00	250	400	191	0	358.200	0.000	0.01050	0.00000	0.00000
MSD-01.4B-05E	2	8.625	0	0.322	0.322	0.000	0.000	0.000	1.50	90	0.00	A182/F11F11/	0.00	0.00	0.00	250	400	191	0	358.200	0.000	0.01050	0.00000	0.00000
MSD-01.4B-07P	52	8.625	0	0.322	0.322	0.000	0.000	0.000	0.00	180	2.00	A335/P11P11/	0.00	0.00	0.00	250	400	191	0	358.200	0.000	0.01050	0.00000	0.00000
MSD-01.4B-06T	15	8.625	0	0.322	0.322	0.000	6.625	0.280	0.00	90	0.00	A335/P11P11/	0.00	0.00	0.00	250	400	191	0	358.200	0.000	0.01050	0.01050	0.00000
MSD-01.4B-08P	65	8.625	0	0.322	0.322	0.000	0.000	0.000	0.00	180	4.00	A335/P11P11/	0.00	0.00	0.00	250	400	191	0	358.200	0.000	0.01050	0.00000	0.00000
MSD-01.5B-01R	7	8.625	40	0.322	0.000	0.000	6.625	0.280	0.00	180	0.00	A182/F11F11/	0.00	0.00	0.00	250	400	191	0	358.200	0.000	0.01050	0.01050	0.00000
MSD-01.5B-02P	57	6.625	0	0.280	0.280	0.000	0.000	0.000	0.00	180	55.00	A335/P11P11/	0.00	0.00	0.00	250	400	191	0	358.200	0.000	0.01050	0.00000	0.00000
MSD-01.5B-03E	2	6.625	0	0.280	0.280	0.000	0.000	0.000	1.50	90	0.00	A182/F11F11/	0.00	0.00	0.00	250	400	191	0	358.200	0.000	0.01050	0.00000	0.00000
MSD-01.5B-04V	25	6.625	0	0.280	0.280	0.000	0.000	0.000	0.00	90	0.00	A217/WC6WC6/	0.00	0.00	0.00	250	400	191	0	358.200	0.000	0.01050	0.00000	0.00000
MSD-01.5B-05P	58	6.625	40	0.280	0.307	0.000	0.000	0.000	0.00	90	13.00	A335/P11P11/	0.00	0.00	0.00	250	400	191	0	358.200	0.000	0.01050	0.00000	0.00000
MSD-01.5B-06E	2	6.625	40	0.280	0.303	0.000	0.000	0.000	1.50	90	0.00	A182/F11F11/	0.00	0.00	0.00	250	400	191	0	358.200	0.000	0.01050	0.00000	0.00000
MSD-01.5B-07P	52	6.625	40	0.280	0.313	0.000	0.000	0.000	0.00	180	48.00	A335/P11P11/	0.00	0.00	0.00	250	400	191	0	358.200	0.000	0.01050	0.00000	0.00000
MSD-01.5B-08E	2	6.625	0	0.280	0.280	0.000	0.000	0.000	1.50	90	0.00	A182/F11F11/	0.00	0.00	0.00	250	400	191	0	358.200	0.000	0.01050	0.00000	0.00000
MSD-01.5B-09P	52	6.625	0	0.280	0.280	0.000	0.000	0.000	0.00	90	6.00	A335/P11P11/	0.00	0.00	0.00	250	400	191	0	358.200	0.000	0.01050	0.00000	0.00000
MSD-01.5B-10E	4	6.625	0	0.280	0.280	0.000	0.000	0.000	1.50	90	0.00	A182/F11F11/	0.00	0.00	0.00	250	400	191	0	358.200	0.000	0.01050	0.00000	0.00000
MSD-01.5B-11P_1	54	6.625	0	0.280	0.280	0.000	0.000	0.000	0.00	90	81.00	A335/P11P11/	0.00	0.00	0.00	250	400	191	0	358.200	0.000	0.01050	0.00000	0.00000
MSD-01.5B-11P_2	54	6.625	0	0.280	0.280	0.000	0.000	0.000	0.00	90	18.38	A53/BS/	0.00	0.00	0.00	250	400	191	0	358.200	0.000	0.01050	0.00000	0.00000
MSD-01.5B-29P	9	6.625	0	0.280	0.280	0.000	0.000	0.000	0.00	90	1270.63	A53/BS/	0.00	0.00	0.00	250	400	191	0	358.200	0.000	0.01050	0.00000	0.00000
MSD-01.5B-12E	2	6.625	0	0.280	0.280	0.000	0.000	0.000	1.50	90	0.00	A234/WPBWPB/	0.00	0.00	0.00	250	400	191	0	358.200	0.000	0.01050	0.00000	0.00000
MSD-01.5B-13P	52	6.625	0	0.280	0.280	0.000	0.000	0.000	0.00	180	37.00	A53/BS/	0.00	0.00	0.00	250	400	191	0	358.200	0.000	0.01050	0.00000	0.00000
MSD-01.5B-14E	2	6.625	0	0.280	0.280	0.000	0.000	0.000	1.50	90	0.00	A234/WPBWPB/	0.00	0.00	0.00	250	400	191	0	358.200	0.000	0.01050	0.00000	0.00000
MSD-01.5B-15P	52	6.625	0	0.280	0.280	0.000	0.000	0.000	0.00	90	99.38	A53/BS/	0.00	0.00	0.00	250	400	191	0	358.200	0.000	0.01050	0.00000	0.00000
MSD-01.5B-30P_1	9	6.625	0	0.280	0.280	0.000	0.000	0.000	0.00	90	805.13	A53/BS/	0.00	0.00	0.00	250	400	191	0	358.200	0.000	0.01050	0.00000	0.00000
MSD-01.5B-30P_2	9	6.625	0	0.280	0.000	0.000	0.000	0.000	0.00	90	92.25	A335/P11P11/	0.00	0.00	0.00	250	400	191	0	358.200	0.000	0.01050	0.00000	0.00000
MSD-01.5B-16E	1	6.625	0	0.280	0.280	0.000	0.000	0.000	1.50	90	0.00	A182/F11F11/	0.00	0.00	0.00	250	400	191	0	358.200	0.000	0.01050	0.00000	0.00000
MSD-01.5B-17P	51	6.625	0	0.280	0.280	0.000	0.000	0.000	0.00	90	48.00	A335/P11P11/	0.00	0.00	0.00	250	400	191	0	358.200	0.000	0.01050	0.00000	0.00000
MSD-01.5B-18E	1	6.625	0	0.280	0.280	0.000	0.000	0.000	1.50	90	0.00	A182/F11F11/	0.00	0.00	0.00	250	400	191	0	358.200	0.000	0.01050	0.00000	0.00000
MSD-01.5B-19P	51	6.625	0	0.280	0.280	0.000	0.000	0.000	0.00	90	73.00	A335/P11P11/	0.00	0.00	0.00	250	400	191	0	358.200	0.000	0.01050	0.00000	0.00000
MSD-01.5B-20E	1	6.625	0	0.280	0.280	0.000	0.000	0.000	1.50	90	0.00	A182/F11F11/	0.00	0.00	0.00	250	400	191	0	358.200	0.000	0.01050	0.00000	0.00000
MSD-01.5B-21P	51	6.625	0	0.280	0.280	0.000	0.000	0.000	0.00	90	30.00	A335/P11P11/	0.00	0.00	0.00	250	400	191	0	358.200	0.000	0.01050	0.00000	0.00000

Component Name	Geom Code	Pipe Size OD (in)	Sch.	Tnom (in)	Tinit (in)	Tcrit (in)	Br/Small End OD (in)	Br/Small Tnom (in)	R / D Ratio	Orient Angle (Deg.)	Pipe Length (in)	Spec/Type/ Class	Material Cr. (%)	Cu. (%)	Mo. (%)	Design Press. (psig)	Design Temp. (Deg. F)	Op. Press. (psig)	Op. Temp. (Deg. F)	Op. Enth. (Btu/lbm)	Op. Qual.	Flow Rate U/S Mn.	D/S Mn. (Mlbm/hr)	Br.
MSD-01.5B-22E	1	6.625	0	0.280	0.280	0.000	0.000	0.000	1.50	90	0.00	A182/F11F11/	0.00	0.00	0.00	250	400	191	0	358.200	0.000	0.01050	0.00000	0.00000
MSD-01.5B-23P	51	6.625	0	0.280	0.280	0.000	0.000	0.000	0.00	90	99.38	A335/P11P11/	0.00	0.00	0.00	250	400	191	0	358.200	0.000	0.01050	0.00000	0.00000
MSD-01.5B-31P	9	6.625	0	0.280	0.280	0.000	0.000	0.000	0.00	90	137.63	A335/P11P11/	0.00	0.00	0.00	250	400	191	0	358.200	0.000	0.01050	0.00000	0.00000
MSD-01.5B-24E	2	6.625	0	0.280	0.280	0.000	0.000	0.000	1.50	90	0.00	A182/F11F11/	0.00	0.00	0.00	250	400	191	0	358.200	0.000	0.01050	0.00000	0.00000
MSD-01.5B-25P	52	6.625	40	0.280	0.302	0.000	0.000	0.000	0.00	180	42.00	A335/P11P11/	0.00	0.00	0.00	250	400	191	0	358.200	0.000	0.01050	0.00000	0.00000
MSD-01.5B-32P	52	6.625	0	0.280	0.302	0.000	0.000	0.000	0.00	90	0.00	A335/P11P11/	0.00	0.00	0.00	250	400	191	0	358.200	0.000	0.01050	0.00000	0.00000
MSD-01.5B-26E	2	6.625	0	0.280	0.280	0.000	0.000	0.000	1.50	90	0.00	A182/F11F11/	0.00	0.00	0.00	250	400	191	0	358.200	0.000	0.01050	0.00000	0.00000
MSD-01.5B-27P	52	6.625	40	0.280	0.311	0.000	0.000	0.000	0.00	90	21.00	A335/P11P11/	0.00	0.00	0.00	250	400	191	0	358.200	0.000	0.01050	0.00000	0.00000
MSD-01.5B-28N	30	6.625	0	0.280	0.280	0.000	0.000	0.000	0.00	90	0.00	A106/BB/	0.00	0.00	0.00	250	400	191	0	358.200	0.000	0.01050	0.00000	0.00000
Line Name : MSD-01.6A_1 MSEP 32A to HDR																								
MSD-01.6A-01N	31	12.750	0	0.250	0.250	0.000	0.000	0.000	0.00	90	0.00	A106/BB/	0.00	0.00	0.00	250	400	191	0	358.200	0.000	0.00350	0.00000	0.00000
MSD-01.6A-03P	60	12.750	0	0.250	0.250	0.000	0.000	0.000	0.00	95	88.00	A53/BS/	0.00	0.00	0.00	250	400	191	0	358.200	0.000	0.00350	0.00000	0.00000
Line Name : MSD-01.7A MSEP 32A DR HDR																								
MSD-01.7A-01T	12	12.750	0	0.250	0.250	0.000	12.750	0.250	0.00	90	0.00	A234/WPBWPB/	0.00	0.00	0.00	250	400	191	0	358.200	0.000	0.00350	0.00700	0.00350
Line Name : MSD-01.6A_2 MSEP 32A to HDR																								
MSD-01.6A-04N	31	12.750	1	1.125	1.125	0.000	0.000	0.000	0.00	90	0.00	A106/BB/	0.00	0.00	0.00	250	400	191	0	358.200	0.000	0.00350	0.00000	0.00000
MSD-01.6A-08P	61	12.750	0	0.250	0.250	0.000	0.000	0.000	0.00	180	88.00	A53/BS/	0.00	0.00	0.00	250	400	191	0	358.200	0.000	0.00350	0.00000	0.00000
Line Name : MSD-01.6A_3 MSEP 32A to HDR																								
MSD-01.6A-05N	31	12.750	0	0.250	0.250	0.000	0.000	0.000	0.00	90	0.00	A106/BB/	0.00	0.00	0.00	250	400	191	0	358.200	0.000	0.00350	0.00000	0.00000
MSD-01.6A-07P	60	12.750	0	0.250	0.250	0.000	0.000	0.000	0.00	95	39.00	A53/BS/	0.00	0.00	0.00	250	400	191	0	358.200	0.000	0.00350	0.00000	0.00000
Line Name : MSD-01.6B_1 MSEP 32B to HDR																								
MSD-01.6B-01N	31	12.750	0	0.250	0.250	0.000	0.000	0.000	0.00	90	0.00	A106/BB/	0.00	0.00	0.00	250	400	191	0	358.200	0.000	0.00350	0.00000	0.00000
MSD-01.6B-03P	60	12.750	20	0.250	0.312	0.000	0.000	0.000	0.00	95	88.00	A53/BS/	0.00	0.00	0.00	250	400	191	0	358.200	0.000	0.00350	0.00000	0.00000
Line Name : MSD-01.7B MSEP 32B DR HDR																								
MSD-01.7B-01T	12	12.750	0	0.250	0.250	0.000	12.750	0.250	0.00	90	0.00	A234/WPBWPB/	0.00	0.00	0.00	250	400	191	0	358.200	0.000	0.00350	0.00700	0.00350
Line Name : MSD-01.6B_2 MSEP 32B to HDR																								
MSD-01.6B-04N	31	12.750	1	1.125	1.125	0.000	0.000	0.000	0.00	90	0.00	A106/BB/	0.00	0.00	0.00	250	400	191	0	358.200	0.000	0.00350	0.00000	0.00000
MSD-01.6B-08P	61	12.750	20	0.250	0.312	0.000	0.000	0.000	0.00	180	88.00	A53/BS/	0.00	0.00	0.00	250	400	191	0	358.200	0.000	0.00350	0.00000	0.00000
Line Name : MSD-01.6B_3 MSEP 32B to HDR																								
MSD-01.6B-05N	31	12.750	0	0.250	0.250	0.000	0.000	0.000	0.00	90	0.00	A106/BB/	0.00	0.00	0.00	250	400	191	0	358.200	0.000	0.00350	0.00000	0.00000
MSD-01.6B-07P	60	12.750	20	0.250	0.264	0.000	0.000	0.000	0.00	95	39.00	A53/BS/	0.00	0.00	0.00	250	400	191	0	358.200	0.000	0.00350	0.00000	0.00000
Line Name : MSD-01.7A MSEP 32A DR HDR																								
MSD-01.7A-02P	62	12.750	0	0.250	0.250	0.000	0.000	0.000	0.00	90	29.00	A53/BS/	0.00	0.00	0.00	250	400	191	0	358.200	0.000	0.00700	0.00000	0.00000
Line Name : MSD-01.8A HDR to MSEP TK 32A																								
MSD-01.8A-01T	11	12.750	0	0.250	0.250	0.000	12.750	0.250	0.00	90	0.00	A234/WPBWPB/	0.00	0.00	0.00	250	400	191	0	358.200	0.000	0.00700	0.00350	0.01050

Component Name	Geom Code	Pipe Size OD (in)	Sch.	Tnom (in)	Tinit (in)	Tcrit (in)	Br/Small End OD (in)	Br/Small Tnom (in)	R / D Ratio	Orient Angle (Deg.)	Pipe Length (in)	Spec/Type/ Class	Material Cr. (%)	Cu. (%)	Mo. (%)	Design Press. (psig)	Design Temp. (Deg. F)	Op. Press. (psig)	Op. Temp. (Deg. F)	Op. Enth. (Btu/lbm)	Op. Qual.	Flow Rate U/S Mn. (Mlbm/hr)	D/S Mn. (Mlbm/hr)	Br.
Line Name :	**MSD-01.7B MSEP 32B DR HDR**																							
MSD-01.7B-02P	62	12.750	20	0.250	0.304	0.000	0.000	0.000	0.00	90	29.00	A53/BS/	0.00	0.00	0.00	250	400	191	0	358.200	0.000	0.00700	0.00000	0.00000
Line Name :	**MSD-01.8B HDR to MSEP TK 32B**																							
MSD-01.8B-01T	11	12.750	0	0.250	0.250	0.000	12.750	0.250	0.00	90	0.00	A234/WPBWPB/	0.00	0.00	0.00	250	400	191	0	358.200	0.000	0.00700	0.00350	0.01050
Line Name :	**MSD-01.8A HDR to MSEP TK 32A**																							
MSD-01.8A-02P	61	12.750	0	0.250	0.250	0.000	0.000	0.000	0.00	95	32.00	A53/BS/	0.00	0.00	0.00	250	400	191	0	358.200	0.000	0.01050	0.00000	0.00000
MSD-01.8A-03E	2	12.750	0	0.250	0.250	0.000	0.000	0.000	1.00	90	0.00	A234/WPBWPB/	0.00	0.00	0.00	250	400	191	0	358.200	0.000	0.01050	0.00000	0.00000
MSD-01.8A-04V	25	12.750	0	0.250	0.250	0.000	0.000	0.000	0.00	90	0.00	A216/WCBWCB/	0.00	0.00	0.00	250	400	191	0	358.200	0.000	0.01050	0.00000	0.00000
MSD-01.8A-05P	58	12.750	0	0.250	0.250	0.000	0.000	0.000	0.00	90	17.00	A53/BS/	0.00	0.00	0.00	250	400	191	0	358.200	0.000	0.01050	0.00000	0.00000
MSD-01.8A-06V	25	12.750	0	0.250	0.250	0.000	0.000	0.000	0.00	90	0.00	A216/WCBWCB/	0.00	0.00	0.00	250	400	191	0	358.200	0.000	0.01050	0.00000	0.00000
MSD-01.8A-07P	58	12.750	0	0.250	0.250	0.000	0.000	0.000	0.00	90	16.00	A53/BS/	0.00	0.00	0.00	250	400	191	0	358.200	0.000	0.01050	0.00000	0.00000
MSD-01.8A-08N	30	12.750	0	0.250	0.250	0.000	0.000	0.000	0.00	90	0.00	A106/BB/	0.00	0.00	0.00	250	400	191	0	358.200	0.000	0.01050	0.00000	0.00000
Line Name :	**MSD-01.8B HDR to MSEP TK 32B**																							
MSD-01.8B-02P	61	12.750	20	0.250	0.285	0.000	0.000	0.000	0.00	95	32.00	A53/BS/	0.00	0.00	0.00	250	400	191	0	358.200	0.000	0.01050	0.00000	0.00000
MSD-01.8B-03E	2	12.750	0	0.250	0.250	0.000	0.000	0.000	1.00	90	0.00	A234/WPBWPB/	0.00	0.00	0.00	250	400	191	0	358.200	0.000	0.01050	0.00000	0.00000
MSD-01.8B-04V	25	12.750	0	0.250	0.250	0.000	0.000	0.000	0.00	90	0.00	A216/WCBWCB/	0.00	0.00	0.00	250	400	191	0	358.200	0.000	0.01050	0.00000	0.00000
MSD-01.8B-05P	58	12.750	0	0.250	0.250	0.000	0.000	0.000	0.00	90	17.00	A53/BS/	0.00	0.00	0.00	250	400	191	0	358.200	0.000	0.01050	0.00000	0.00000
MSD-01.8B-06V	25	12.750	0	0.250	0.250	0.000	0.000	0.000	0.00	90	0.00	A216/WCBWCB/	0.00	0.00	0.00	250	400	191	0	358.200	0.000	0.01050	0.00000	0.00000
MSD-01.8B-07P	58	12.750	0	0.250	0.250	0.000	0.000	0.000	0.00	90	16.00	A53/BS/	0.00	0.00	0.00	250	400	191	0	358.200	0.000	0.01050	0.00000	0.00000
MSD-01.8B-08N	30	12.750	0	0.250	0.250	0.000	0.000	0.000	0.00	90	0.00	A106/BB/	0.00	0.00	0.00	250	400	191	0	358.200	0.000	0.01050	0.00000	0.00000
Line Name :	**MSD-01.9A TK 32A to HD TK**																							
MSD-01.9A-01N	31	8.625	0	0.322	0.322	0.000	0.000	0.000	0.00	90	0.00	A106/BB/	0.00	0.00	0.00	250	400	191	0	358.200	0.000	0.01050	0.00000	0.00000
MSD-01.9A-02P	61	8.625	0	0.322	0.322	0.000	0.000	0.000	0.00	180	29.00	A335/P11P11/	0.00	0.00	0.00	250	400	191	0	358.200	0.000	0.01050	0.00000	0.00000
MSD-01.9A-03T	15	8.625	0	0.322	0.322	0.000	6.625	0.280	0.00	90	0.00	A335/P11P11/	0.00	0.00	0.00	250	400	191	0	358.200	0.000	0.01050	0.01050	0.00000
MSD-01.9A-04P	65	8.625	0	0.322	0.322	0.000	0.000	0.000	0.00	180	17.00	A335/P11P11/	0.00	0.00	0.00	250	400	191	0	358.200	0.000	0.01050	0.00000	0.00000
MSD-01.10A-01E	16	8.625	40	0.322	0.000	0.000	6.625	0.280	1.50	90	0.00	A182/F11F11/	0.00	0.00	0.00	250	400	191	0	358.200	0.000	0.01050	0.01050	0.00000
MSD-01.10A-02P	66	6.625	40	0.280	0.304	0.000	0.000	0.000	0.00	90	88.00	A335/P11P11/	0.00	0.00	0.00	250	400	191	0	358.200	0.000	0.01050	0.00000	0.00000
MSD-01.10A-03E	2	6.625	40	0.280	0.309	0.000	0.000	0.000	1.50	90	0.00	A182/F11F11/	0.00	0.00	0.00	250	400	191	0	358.200	0.000	0.01050	0.00000	0.00000
MSD-01.10A-04P	52	6.625	0	0.280	0.280	0.000	0.000	0.000	0.00	180	21.00	A335/P11P11/	0.00	0.00	0.00	250	400	191	0	358.200	0.000	0.01050	0.00000	0.00000
MSD-01.10A-05E	2	6.625	0	0.280	0.280	0.000	0.000	0.000	1.50	90	0.00	A182/F11F11/	0.00	0.00	0.00	250	400	191	0	358.200	0.000	0.01050	0.00000	0.00000
MSD-01.10A-06V	25	6.625	0	0.280	0.280	0.000	0.000	0.000	0.00	90	0.00	A217/WC6WC6/	0.00	0.00	0.00	250	400	191	0	358.200	0.000	0.01050	0.00000	0.00000
MSD-01.10A-07P	58	6.625	40	0.280	0.293	0.000	0.000	0.000	0.00	90	11.00	A335/P11P11/	0.00	0.00	0.00	250	400	191	0	358.200	0.000	0.01050	0.00000	0.00000
MSD-01.10A-08E	2	6.625	40	0.280	0.307	0.000	0.000	0.000	1.50	90	0.00	A182/F11F11/	0.00	0.00	0.00	250	400	191	0	358.200	0.000	0.01050	0.00000	0.00000
MSD-01.10A-09P	52	6.625	40	0.280	0.293	0.000	0.000	0.000	0.00	180	66.00	A335/P11P11/	0.00	0.00	0.00	250	400	191	0	358.200	0.000	0.01050	0.00000	0.00000
MSD-01.10A-10E	1	6.625	0	0.280	0.280	0.000	0.000	0.000	1.50	90	0.00	A182/F11F11/	0.00	0.00	0.00	250	400	191	0	358.200	0.000	0.01050	0.00000	0.00000
MSD-01.10A-11P	51	6.625	0	0.280	0.280	0.000	0.000	0.000	0.00	135	13.00	A335/P11P11/	0.00	0.00	0.00	250	400	191	0	358.200	0.000	0.01050	0.00000	0.00000
MSD-01.10A-12E	2	6.625	0	0.280	0.280	0.000	0.000	0.000	1.50	90	0.00	A182/F11F11/	0.00	0.00	0.00	250	400	191	0	358.200	0.000	0.01050	0.00000	0.00000
MSD-01.10A-13P	52	6.625	0	0.280	0.280	0.000	0.000	0.000	0.00	90	99.38	A335/P11P11/	0.00	0.00	0.00	250	400	191	0	358.200	0.000	0.01050	0.00000	0.00000
MSD-01.10A-26P_1	9	6.625	0	0.280	0.280	0.000	0.000	0.000	0.00	90	11.63	A335/P11P11/	0.00	0.00	0.00	250	400	191	0	358.200	0.000	0.01050	0.00000	0.00000
MSD-01.10A-26P_2	9	6.625	0	0.280	0.280	0.000	0.000	0.000	0.00	90	297.00	A53/BS/	0.00	0.00	0.00	250	400	191	0	358.200	0.000	0.01050	0.00000	0.00000
MSD-01.10A-26P_3	9	6.625	0	0.280	0.280	0.000	0.000	0.000	0.00	90	102.00	A335/P11P11/	0.00	0.00	0.00	250	400	191	0	358.200	0.000	0.01050	0.00000	0.00000
MSD-01.10A-14E	2	6.625	0	0.280	0.280	0.000	0.000	0.000	1.50	90	0.00	A182/F11F11/	0.00	0.00	0.00	250	400	191	0	358.200	0.000	0.01050	0.00000	0.00000
MSD-01.10A-15P	52	6.625	0	0.280	0.280	0.000	0.000	0.000	0.00	90	46.00	A335/P11P11/	0.00	0.00	0.00	250	400	191	0	358.200	0.000	0.01050	0.00000	0.00000
MSD-01.10A-16E	2	6.625	0	0.280	0.280	0.000	0.000	0.000	1.50	90	0.00	A182/F11F11/	0.00	0.00	0.00	250	400	191	0	358.200	0.000	0.01050	0.00000	0.00000
MSD-01.10A-17P	52	6.625	0	0.280	0.280	0.000	0.000	0.000	0.00	180	55.00	A335/P11P11/	0.00	0.00	0.00	250	400	191	0	358.200	0.000	0.01050	0.00000	0.00000
MSD-01.10A-18E	2	6.625	0	0.280	0.280	0.000	0.000	0.000	1.50	90	0.00	A182/F11F11/	0.00	0.00	0.00	250	400	191	0	358.200	0.000	0.01050	0.00000	0.00000
MSD-01.10A-19P	52	6.625	0	0.280	0.280	0.000	0.000	0.000	0.00	90	99.38	A335/P11P11/	0.00	0.00	0.00	250	400	191	0	358.200	0.000	0.01050	0.00000	0.00000
MSD-01.10A-27P	9	6.625	0	0.280	0.280	0.000	0.000	0.000	0.00	90	106.63	A335/P11P11/	0.00	0.00	0.00	250	400	191	0	358.200	0.000	0.01050	0.00000	0.00000
MSD-01.10A-20E	2	6.625	0	0.280	0.280	0.000	0.000	0.000	1.50	90	0.00	A182/F11F11/	0.00	0.00	0.00	250	400	191	0	358.200	0.000	0.01050	0.00000	0.00000
MSD-01.10A-21P	52	6.625	40	0.280	0.294	0.000	0.000	0.000	0.00	90	84.00	A335/P11P11/	0.00	0.00	0.00	250	400	191	0	358.200	0.000	0.01050	0.00000	0.00000
MSD-01.10A-22E	2	6.625	0	0.280	0.317	0.000	0.000	0.000	1.50	90	0.00	A182/F11F11/	0.00	0.00	0.00	250	400	191	0	358.200	0.000	0.01050	0.00000	0.00000
MSD-01.10A-23P	52	6.625	40	0.280	0.289	0.000	0.000	0.000	0.00	180	42.00	A335/P11P11/	0.00	0.00	0.00	250	400	191	0	358.200	0.000	0.01050	0.00000	0.00000
MSD-01.10A-24E	2	6.625	0	0.280	0.280	0.000	0.000	0.000	1.50	90	0.00	A182/F11F11/	0.00	0.00	0.00	250	400	191	0	358.200	0.000	0.01050	0.00000	0.00000

Component Name	Geom Code	Pipe Size OD (in)	Sch.	Tnom (in)	Tinit (in)	Tcrit (in)	Br/Small End OD (in)	Br/Small Tnom (in)	R / D Ratio	Orient Angle (Deg.)	Pipe Length (in)	Spec/Type/ Class	Material Cr. (%)	Material Cu. (%)	Material Mo. (%)	Design Press. (psig)	Design Temp. (Deg. F)	Op. Press. (psig)	Op. Temp. (Deg. F)	Op. Enth. (Btu/lbm)	Op. Qual.	Flow Rate U/S Mn. (Mlbm/hr)	Flow Rate D/S Mn. (Mlbm/hr)	Br.
MSD-01.10A-25N	30	6.625	0	0.280	0.280	0.000	0.000	0.000	0.00	90	0.00	A106/BB/	0.00	0.00	0.00	250	400	191	0	358.200	0.000	0.01050	0.00000	0.00000
Line Name : MSD-01.9B TK 32B to HD TK																								
MSD-01.9B-01N	31	8.625	0	0.322	0.322	0.000	0.000	0.000	0.00	90	0.00	A106/BB/	0.00	0.00	0.00	250	400	191	0	358.200	0.000	0.01050	0.00000	0.00000
MSD-01.9B-02P	61	8.625	0	0.322	0.322	0.000	0.000	0.000	0.00	180	30.00	A335/P11P11/	0.00	0.00	0.00	250	400	191	0	358.200	0.000	0.01050	0.00000	0.00000
MSD-01.9B-03T	15	8.625	0	0.322	0.322	0.000	6.625	0.280	0.00	90	0.00	A335/P11P11/	0.00	0.00	0.00	250	400	191	0	358.200	0.000	0.01050	0.01050	0.00000
MSD-01.9B-04P	65	8.625	0	0.322	0.322	0.000	0.000	0.000	0.00	180	8.00	A335/P11P11/	0.00	0.00	0.00	250	400	191	0	358.200	0.000	0.01050	0.00000	0.00000
MSD-01.10B-01E	16	8.625	40	0.322	0.000	0.000	6.625	0.280	1.50	90	0.00	A182/F11F11/	0.00	0.00	0.00	250	400	191	0	358.200	0.000	0.01050	0.01050	0.00000
MSD-01.10B-02E	4	6.625	0	0.280	0.280	0.000	0.000	0.000	1.50	90	0.00	A182/F11F11/	0.00	0.00	0.00	250	400	191	0	358.200	0.000	0.01050	0.00000	0.00000
MSD-01.10B-03P	54	6.625	0	0.280	0.280	0.000	0.000	0.000	0.00	180	30.00	A335/P11P11/	0.00	0.00	0.00	250	400	191	0	358.200	0.000	0.01050	0.00000	0.00000
MSD-01.10B-04E	2	6.625	0	0.280	0.280	0.000	0.000	0.000	1.50	90	0.00	A182/F11F11/	0.00	0.00	0.00	250	400	191	0	358.200	0.000	0.01050	0.00000	0.00000
MSD-01.10B-05V	25	6.625	0	0.280	0.280	0.000	0.000	0.000	0.00	90	0.00	A217/WC6WC6/	0.00	0.00	0.00	250	400	191	0	358.200	0.000	0.01050	0.00000	0.00000
MSD-01.10B-06P	58	6.625	40	0.280	0.299	0.000	0.000	0.000	0.00	90	13.00	A335/P11P11/	0.00	0.00	0.00	250	400	191	0	358.200	0.000	0.01050	0.00000	0.00000
MSD-01.10B-07E	2	6.625	40	0.280	0.328	0.000	0.000	0.000	1.50	90	0.00	A182/F11F11/	0.00	0.00	0.00	250	400	191	0	358.200	0.000	0.01050	0.00000	0.00000
MSD-01.10B-08P	52	6.625	40	0.280	0.289	0.000	0.000	0.000	0.00	180	55.00	A335/P11P11/	0.00	0.00	0.00	250	400	191	0	358.200	0.000	0.01050	0.00000	0.00000
MSD-01.10B-09E	2	6.625	0	0.280	0.280	0.000	0.000	0.000	1.50	90	0.00	A182/F11F11/	0.00	0.00	0.00	250	400	191	0	358.200	0.000	0.01050	0.00000	0.00000
MSD-01.10B-10P	52	6.625	0	0.280	0.280	0.000	0.000	0.000	0.00	90	99.38	A335/P11P11/	0.00	0.00	0.00	250	400	191	0	358.200	0.000	0.01050	0.00000	0.00000
MSD-01.10B-28P	9	6.625	0	0.280	0.280	0.000	0.000	0.000	0.00	90	785.63	A53/BS/	0.00	0.00	0.00	250	400	191	0	358.200	0.000	0.01050	0.00000	0.00000
MSD-01.10B-11E	2	6.625	0	0.280	0.280	0.000	0.000	0.000	1.50	90	0.00	A234/WPBWPB/	0.00	0.00	0.00	250	400	191	0	358.200	0.000	0.01050	0.00000	0.00000
MSD-01.10B-12P	52	6.625	0	0.280	0.280	0.000	0.000	0.000	0.00	180	37.00	A53/BS/	0.00	0.00	0.00	250	400	191	0	358.200	0.000	0.01050	0.00000	0.00000
MSD-01.10B-13E	2	6.625	0	0.280	0.280	0.000	0.000	0.000	1.50	90	0.00	A234/WPBWPB/	0.00	0.00	0.00	250	400	191	0	358.200	0.000	0.01050	0.00000	0.00000
MSD-01.10B-14P	52	6.625	0	0.280	0.280	0.000	0.000	0.000	0.00	90	99.38	A53/BS/	0.00	0.00	0.00	250	400	191	0	358.200	0.000	0.01050	0.00000	0.00000
MSD-01.10B-29P_1	9	6.625	0	0.280	0.280	0.000	0.000	0.000	0.00	90	840.13	A53/BS/	0.00	0.00	0.00	250	400	191	0	358.200	0.000	0.01050	0.00000	0.00000
MSD-01.10B-29P_2	9	6.625	0	0.280	0.280	0.000	0.000	0.000	0.00	90	92.25	A335/P11P11/	0.00	0.00	0.00	250	400	191	0	358.200	0.000	0.01050	0.00000	0.00000
MSD-01.10B-15E	1	6.625	0	0.280	0.280	0.000	0.000	0.000	1.50	90	0.00	A182/F11F11/	0.00	0.00	0.00	250	400	191	0	358.200	0.000	0.01050	0.00000	0.00000
MSD-01.10B-16P	51	6.625	0	0.280	0.280	0.000	0.000	0.000	0.00	90	68.00	A335/P11P11/	0.00	0.00	0.00	250	400	191	0	358.200	0.000	0.01050	0.00000	0.00000
MSD-01.10B-17E	1	6.625	0	0.280	0.280	0.000	0.000	0.000	1.50	90	0.00	A182/F11F11/	0.00	0.00	0.00	250	400	191	0	358.200	0.000	0.01050	0.00000	0.00000
MSD-01.10B-18P	51	6.625	0	0.280	0.280	0.000	0.000	0.000	0.00	90	73.00	A335/P11P11/	0.00	0.00	0.00	250	400	191	0	358.200	0.000	0.01050	0.00000	0.00000
MSD-01.10B-19E	1	6.625	0	0.280	0.280	0.000	0.000	0.000	1.50	90	0.00	A182/F11F11/	0.00	0.00	0.00	250	400	191	0	358.200	0.000	0.01050	0.00000	0.00000
MSD-01.10B-20P	51	6.625	0	0.280	0.280	0.000	0.000	0.000	0.00	90	26.00	A335/P11P11/	0.00	0.00	0.00	250	400	191	0	358.200	0.000	0.01050	0.00000	0.00000
MSD-01.10B-21E	1	6.625	0	0.280	0.280	0.000	0.000	0.000	1.50	90	0.00	A182/F11F11/	0.00	0.00	0.00	250	400	191	0	358.200	0.000	0.01050	0.00000	0.00000
MSD-01.10B-22P	51	6.625	0	0.280	0.280	0.000	0.000	0.000	0.00	90	99.38	A335/P11P11/	0.00	0.00	0.00	250	400	191	0	358.200	0.000	0.01050	0.00000	0.00000
MSD-01.10B-30P	9	6.625	0	0.280	0.280	0.000	0.000	0.000	0.00	90	73.63	A335/P11P11/	0.00	0.00	0.00	250	400	191	0	358.200	0.000	0.01050	0.00000	0.00000
MSD-01.10B-23E	2	6.625	0	0.280	0.280	0.000	0.000	0.000	1.50	90	0.00	A182/F11F11/	0.00	0.00	0.00	250	400	191	0	358.200	0.000	0.01050	0.00000	0.00000
MSD-01.10B-24P	52	6.625	40	0.280	0.285	0.000	0.000	0.000	0.00	180	42.00	A335/P11P11/	0.00	0.00	0.00	250	400	191	0	358.200	0.000	0.01050	0.00000	0.00000
MSD-01.10B-25E	2	6.625	40	0.280	0.316	0.000	0.000	0.000	1.50	90	0.00	A182/F11F11/	0.00	0.00	0.00	250	400	191	0	358.200	0.000	0.01050	0.00000	0.00000
MSD-01.10B-26P	52	6.625	40	0.280	0.290	0.000	0.000	0.000	0.00	90	36.00	A335/P11P11/	0.00	0.00	0.00	250	400	191	0	358.200	0.000	0.01050	0.00000	0.00000
MSD-01.10B-27N	30	6.625	0	0.280	0.280	0.000	0.000	0.000	0.00	90	0.00	A106/BB/	0.00	0.00	0.00	250	400	191	0	358.200	0.000	0.01050	0.00000	0.00000
Line Name : PD-01.1 PRESEP 1B DR to HDR																								
PD-01.1-01N	31	14.000	0	0.375	0.375	0.000	0.000	0.000	0.00	90	0.00	A240/TP321/	0.00	0.00	0.00	250	400	207	0	364.799	0.000	0.23573	0.23573	0.00000
PD-01.2-01R	7	14.000	0	0.375	0.000	0.000	10.750	0.365	0.00	180	0.00	A234/WPBWPB/	0.00	0.00	0.00	250	400	207	0	364.799	0.000	0.23573	0.23573	0.00000
PD-01.2-02B	3	10.750	0	0.365	0.365	0.000	0.000	0.000	1.50	90	0.00	A53/BS/	0.00	0.00	0.00	250	400	207	0	364.799	0.000	0.23573	0.23573	0.00000
PD-01.2-03P	53	10.750	0	0.365	0.365	0.000	0.000	0.000	0.00	169	0.00	A53/BS/	0.00	0.00	0.00	250	400	207	0	364.799	0.000	0.23573	0.23573	0.00000
PD-01.2-04E	2	10.750	0	0.365	0.365	0.000	0.000	0.000	1.50	90	0.00	A234/WPBWPB/	0.00	0.00	0.00	250	400	207	0	364.799	0.000	0.23573	0.23573	0.00000
PD-01.2-05P	52	10.750	0	0.365	0.365	0.000	0.000	0.000	0.00	139	0.00	A53/BS/	0.00	0.00	0.00	250	400	207	0	364.800	0.000	0.23573	0.23573	0.00000
PD-01.2-06E	2	10.750	0	0.365	0.365	0.000	0.000	0.000	1.50	90	0.00	A234/WPBWPB/	0.00	0.00	0.00	250	400	207	0	364.799	0.000	0.23573	0.23573	0.00000
PD-01.2-07P	52	10.750	0	0.365	0.365	0.000	0.000	0.000	0.00	120	0.00	A53/BS/	0.00	0.00	0.00	250	400	207	0	364.800	0.000	0.23573	0.23573	0.00000
PD-01.2-08E	1	10.750	0	0.365	0.365	0.000	0.000	0.000	1.50	90	0.00	A234/WPBWPB/	0.00	0.00	0.00	250	400	207	0	364.800	0.000	0.23573	0.23573	0.00000
PD-01.2-09V	25	10.750	0	0.365	0.365	0.000	0.000	0.000	0.00	90	0.00	A216/WCBWCB/	0.00	0.00	0.00	250	400	207	0	364.800	0.000	0.23573	0.23573	0.00000
PD-01.2-10O	6	10.750	0	0.365	0.365	0.000	0.000	0.000	0.00	90	0.00	A53/BS/	0.00	0.00	0.00	250	400	207	0	364.799	0.000	0.23573	0.23573	0.00000
Line Name : PD-01.3 PRESEP 1A DR to HDR																								
PD-01.3-01N	31	14.000	0	0.375	0.375	0.000	0.000	0.000	0.00	90	0.00	A240/TP321/	0.00	0.00	0.00	250	400	207	0	364.800	0.000	0.23573	0.23573	0.00000
PD-01.4-01R	7	14.000	0	0.375	0.000	0.000	10.750	0.365	0.00	180	0.00	A234/WPBWPB/	0.00	0.00	0.00	250	400	207	0	364.799	0.000	0.23573	0.23573	0.00000
PD-01.4-02B	3	10.750	0	0.365	0.365	0.000	0.000	0.000	1.50	90	0.00	A53/BS/	0.00	0.00	0.00	250	400	207	0	364.799	0.000	0.23573	0.23573	0.00000
PD-01.4-03P	53	10.750	0	0.365	0.365	0.000	0.000	0.000	0.00	169	0.00	A53/BS/	0.00	0.00	0.00	250	400	207	0	364.799	0.000	0.23573	0.23573	0.00000
PD-01.4-04E	1	10.750	0	0.365	0.365	0.000	0.000	0.000	1.50	90	0.00	A234/WPBWPB/	0.00	0.00	0.00	250	400	207	0	364.800	0.000	0.23573	0.23573	0.00000
PD-01.4-05P	51	10.750	0	0.365	0.365	0.000	0.000	0.000	0.00	149	0.00	A53/BS/	0.00	0.00	0.00	250	400	207	0	364.800	0.000	0.23573	0.23573	0.00000
PD-01.4-06E	2	10.750	0	0.365	0.365	0.000	0.000	0.000	1.50	90	0.00	A234/WPBWPB/	0.00	0.00	0.00	250	400	207	0	364.800	0.000	0.23573	0.23573	0.00000
PD-01.4-07P	52	10.750	0	0.365	0.365	0.000	0.000	0.000	0.00	120	0.00	A53/BS/	0.00	0.00	0.00	250	400	207	0	364.800	0.000	0.23573	0.23573	0.00000

Component Name	Geom Code	Pipe Size OD (in)	Sch.	Tnom (in)	Tinit (in)	Tcrit (in)	Br/Small End OD (in)	Br/Small Tnom (in)	R / D Ratio	Orient Angle (Deg.)	Pipe Length (in)	Spec/Type/ Class	Material Cr. (%)	Cu. (%)	Mo. (%)	Design Press. (psig)	Design Temp. (Deg. F)	Op. Press. (psig)	Op. Temp. (Deg. F)	Op. Enth. (Btu/lbm)	Op. Qual.	Flow Rate U/S Mn. (Mlbm/hr)	D/S Mn. (Mlbm/hr)	Br.
PD-01.4-08E	1	10.750	0	0.365	0.365	0.000	0.000	0.000	1.50	90	0.00	A234/WPBWPB/	0.00	0.00	0.00	250	400	207	0	364.800	0.000	0.23573	0.23573	0.00000
PD-01.4-09V	25	10.750	0	0.365	0.365	0.000	0.000	0.000	0.00	90	0.00	A216/WCBWCB/	0.00	0.00	0.00	250	400	207	0	364.800	0.000	0.23573	0.23573	0.00000
PD-01.4-10O	6	10.750	40	0.365	0.380	0.000	0.000	0.000	0.00	90	0.00	A53/BS/	0.00	0.00	0.00	250	400	207	0	364.799	0.000	0.23573	0.23573	0.00000
Line Name : PD-01.5 PRESEP 2B DR to HDR																								
PD-01.5-01N	31	14.000	0	0.375	0.375	0.000	0.000	0.000	0.00	90	0.00	A240/TP321/	0.00	0.00	0.00	250	400	207	0	364.800	0.000	0.23573	0.23573	0.00000
PD-01.6-01R	7	14.000	0	0.375	0.000	0.000	10.750	0.365	0.00	180	0.00	A234/WPBWPB/	0.00	0.00	0.00	250	400	207	0	364.799	0.000	0.23573	0.23573	0.00000
PD-01.6-02B	3	10.750	0	0.365	0.365	0.000	0.000	0.000	1.50	90	0.00	A53/BS/	0.00	0.00	0.00	250	400	207	0	364.799	0.000	0.23573	0.23573	0.00000
PD-01.6-03P	53	10.750	0	0.365	0.365	0.000	0.000	0.000	0.00	161	0.00	A53/BS/	0.00	0.00	0.00	250	400	207	0	364.799	0.000	0.23573	0.23573	0.00000
PD-01.6-04E	2	10.750	0	0.365	0.365	0.000	0.000	0.000	1.50	90	0.00	A234/WPBWPB/	0.00	0.00	0.00	250	400	207	0	364.799	0.000	0.23573	0.23573	0.00000
PD-01.6-05P	52	10.750	0	0.365	0.365	0.000	0.000	0.000	0.00	102	0.00	A53/BS/	0.00	0.00	0.00	250	400	207	0	364.800	0.000	0.23573	0.23573	0.00000
PD-01.6-06E	2	10.750	0	0.365	0.365	0.000	0.000	0.000	1.50	90	0.00	A234/WPBWPB/	0.00	0.00	0.00	250	400	207	0	364.799	0.000	0.23573	0.23573	0.00000
PD-01.6-07P	52	10.750	0	0.365	0.365	0.000	0.000	0.000	0.00	180	0.00	A53/BS/	0.00	0.00	0.00	250	400	207	0	364.800	0.000	0.23573	0.23573	0.00000
PD-01.6-08E	4	10.750	0	0.365	0.365	0.000	0.000	0.000	1.50	90	0.00	A234/WPBWPB/	0.00	0.00	0.00	250	400	207	0	364.800	0.000	0.23573	0.23573	0.00000
PD-01.6-09P	54	10.750	0	0.365	0.365	0.000	0.000	0.000	0.00	134	0.00	A53/BS/	0.00	0.00	0.00	250	400	207	0	364.800	0.000	0.23573	0.23573	0.00000
PD-01.6-10E	4	10.750	0	0.365	0.365	0.000	0.000	0.000	1.50	90	0.00	A234/WPBWPB/	0.00	0.00	0.00	250	400	207	0	364.800	0.000	0.23573	0.23573	0.00000
PD-01.6-11P	54	10.750	0	0.365	0.365	0.000	0.000	0.000	0.00	120	0.00	A53/BS/	0.00	0.00	0.00	250	400	207	0	364.800	0.000	0.23573	0.23573	0.00000
PD-01.6-12E	1	10.750	0	0.365	0.365	0.000	0.000	0.000	1.50	90	0.00	A234/WPBWPB/	0.00	0.00	0.00	250	400	207	0	364.800	0.000	0.23573	0.23573	0.00000
PD-01.6-13V	25	10.750	0	0.365	0.365	0.000	0.000	0.000	0.00	90	0.00	A216/WCBWCB/	0.00	0.00	0.00	250	400	207	0	364.800	0.000	0.23573	0.23573	0.00000
PD-01.6-14O	6	10.750	0	0.365	0.365	0.000	0.000	0.000	0.00	90	0.00	A53/BS/	0.00	0.00	0.00	250	400	207	0	364.799	0.000	0.23573	0.23573	0.00000
Line Name : PD-01.7 PRESEP 2A DR to HDR																								
PD-01.7-01N	31	14.000	0	0.375	0.375	0.000	0.000	0.000	0.00	90	0.00	A240/TP321/	0.00	0.00	0.00	250	400	207	0	364.800	0.000	0.23573	0.23573	0.00000
PD-01.8-01R	7	14.000	0	0.375	0.000	0.000	10.750	0.365	0.00	180	0.00	A234/WPBWPB/	0.00	0.00	0.00	250	400	207	0	364.799	0.000	0.23573	0.23573	0.00000
PD-01.8-02B	3	10.750	0	0.365	0.365	0.000	0.000	0.000	1.50	90	0.00	A53/BS/	0.00	0.00	0.00	250	400	207	0	364.799	0.000	0.23573	0.23573	0.00000
PD-01.8-03P	53	10.750	0	0.365	0.365	0.000	0.000	0.000	0.00	161	0.00	A53/BS/	0.00	0.00	0.00	250	400	207	0	364.799	0.000	0.23573	0.23573	0.00000
PD-01.8-04E	2	10.750	0	0.365	0.365	0.000	0.000	0.000	1.50	90	0.00	A234/WPBWPB/	0.00	0.00	0.00	250	400	207	0	364.799	0.000	0.23573	0.23573	0.00000
PD-01.8-05P	52	10.750	0	0.365	0.365	0.000	0.000	0.000	0.00	102	0.00	A53/BS/	0.00	0.00	0.00	250	400	207	0	364.800	0.000	0.23573	0.23573	0.00000
PD-01.8-06E	2	10.750	0	0.365	0.365	0.000	0.000	0.000	1.50	90	0.00	A234/WPBWPB/	0.00	0.00	0.00	250	400	207	0	364.800	0.000	0.23573	0.23573	0.00000
PD-01.8-07P	52	10.750	0	0.365	0.365	0.000	0.000	0.000	0.00	180	0.00	A53/BS/	0.00	0.00	0.00	250	400	207	0	364.800	0.000	0.23573	0.23573	0.00000
PD-01.8-08E	2	10.750	0	0.365	0.365	0.000	0.000	0.000	1.50	90	0.00	A234/WPBWPB/	0.00	0.00	0.00	250	400	207	0	364.799	0.000	0.23573	0.23573	0.00000
PD-01.8-09P	52	10.750	0	0.365	0.365	0.000	0.000	0.000	0.00	128	0.00	A53/BS/	0.00	0.00	0.00	250	400	207	0	364.800	0.000	0.23573	0.23573	0.00000
PD-01.8-10E	2	10.750	0	0.365	0.365	0.000	0.000	0.000	1.50	90	0.00	A234/WPBWPB/	0.00	0.00	0.00	250	400	207	0	364.800	0.000	0.23573	0.23573	0.00000
PD-01.8-11P	52	10.750	0	0.365	0.365	0.000	0.000	0.000	0.00	120	0.00	A53/BS/	0.00	0.00	0.00	250	400	207	0	364.800	0.000	0.23573	0.23573	0.00000
PD-01.8-12E	1	10.750	0	0.365	0.365	0.000	0.000	0.000	1.50	90	0.00	A234/WPBWPB/	0.00	0.00	0.00	250	400	207	0	364.800	0.000	0.23573	0.23573	0.00000
PD-01.8-13V	25	10.750	0	0.365	0.365	0.000	0.000	0.000	0.00	90	0.00	A216/WCBWCB/	0.00	0.00	0.00	250	400	207	0	364.799	0.000	0.23573	0.23573	0.00000
PD-01.8-14O	6	10.750	0	0.365	0.365	0.000	0.000	0.000	0.00	90	0.00	A53/BS/	0.00	0.00	0.00	250	400	207	0	364.800	0.000	0.23573	0.23573	0.00000
Line Name : PD-02.2 PRESEP HDR to HD TK																								
PD-02.2-01T	12	16.000	0	0.375	0.375	0.000	10.000	0.365	0.00	90	0.00	A53/BS/	0.00	0.00	0.00	250	400	207	0	364.800	0.000	0.23573	0.47145	0.23573
PD-02.4-22T	15	16.000	0	0.375	0.375	0.000	2.000	0.154	0.00	90	0.00	A53/BS/	0.00	0.00	0.00	250	400	207	0	364.800	0.000	0.47145	0.47145	0.00000
Line Name : PD-02.3 PRESEP HDR to HD TK																								
PD-02.3-01T	12	16.000	0	0.375	0.375	0.000	10.000	0.365	0.00	90	0.00	A53/BS/	0.00	0.00	0.00	250	400	207	0	364.800	0.000	0.47145	0.70718	0.23573
Line Name : PD-02.4 PRESEP HDR to HD TK																								
PD-02.4-01T	12	16.000	0	0.375	0.375	0.000	10.000	0.365	0.00	90	0.00	A53/BS/	0.00	0.00	0.00	250	400	207	0	364.800	0.000	0.70718	0.94290	0.23573
PD-02.4-02E	4	16.000	0	0.375	0.375	0.000	0.000	0.000	1.50	90	0.00	A234/WPBWPB/	0.00	0.00	0.00	250	400	207	0	364.800	0.000	0.94290	0.00000	0.00000
PD-02.4-03P	54	16.000	0	0.375	0.375	0.000	0.000	0.000	0.00	90	35.00	A106/BB/	0.00	0.00	0.00	250	400	207	0	364.800	0.000	0.94290	0.00000	0.00000
PD-02.4-04E	2	16.000	0	0.375	0.375	0.000	0.000	0.000	1.50	90	0.00	A234/WPBWPB/	0.00	0.00	0.00	250	400	207	0	364.800	0.000	0.94290	0.00000	0.00000
PD-02.4-05P	52	16.000	0	0.375	0.375	0.000	0.000	0.000	0.00	90	172.00	A106/BB/	0.00	0.00	0.00	250	400	207	0	364.800	0.000	0.94290	0.00000	0.00000
PD-02.4-22E	2	16.000	0	0.375	0.000	0.000	0.000	0.000	1.50	90	0.00	A234/WPBWPB/	0.00	0.00	0.00	250	400	207	0	364.800	0.000	0.94290	0.00000	0.00000
PD-02.4-23R	18	30.000	0	0.625	0.000	0.000	16.000	0.375	0.00	0	0.00	A234/WPBWPB/	0.00	0.00	0.00	250	400	207	0	364.800	0.000	0.94290	0.94290	0.00000
PD-02.4-24P	68	30.000	0	0.625	0.000	0.000	0.000	0.000	0.00	0	78.19	A516/6060/	0.00	0.00	0.00	250	400	207	0	364.800	0.000	0.94290	0.00000	0.00000
PD-02.4-25T	13	30.000	0	0.625	0.000	0.000	16.000	0.375	0.00	90	0.00	A234/WPBWPB/	0.00	0.00	0.00	250	400	207	0	364.800	0.000	0.94290	0.00000	0.94290
PD-02.4-27P	63	16.000	0	0.375	0.000	0.000	0.000	0.000	0.00	90	12.63	A106/BB/	0.00	0.00	0.00	250	400	207	0	364.800	0.000	0.94290	0.00000	0.00000
PD-02.4-28E	2	16.000	0	0.375	0.000	0.000	0.000	0.000	1.50	90	0.00	A234/WPBWPB/	0.00	0.00	0.00	250	400	207	0	364.800	0.000	0.94290	0.00000	0.00000

Component Name	Geom Code	Pipe Size OD (in)	Sch.	Tnom (in)	Tinit (in)	Tcrit (in)	Br/Small End OD (in)	Br/Small Tnom (in)	R / D Ratio	Orient Angle (Deg.)	Pipe Length (in)	Spec/Type/ Class	Material Cr. (%)	Cu. (%)	Mo. (%)	Design Press. (psig)	Design Temp. (Deg. F)	Op. Press. (psig)	Op. Temp. (Deg. F)	Op. Enth. (Btu/lbm)	Op. Qual.	Flow Rate U/S Mn.	D/S Mn. (Mlbm/hr)	Br.
PD-02.4-06E	4	16.000	0	0.375	0.375	0.000	0.000	0.000	1.50	90	0.00	A234/WPBWPB/	0.00	0.00	0.00	250	400	207	0	364.800	0.000	0.94290	0.00000	0.00000
PD-02.4-07P	54	16.000	0	0.375	0.375	0.000	0.000	0.000	0.00	71	0.00	A53/BS/	0.00	0.00	0.00	250	400	207	0	364.800	0.000	0.94290	0.00000	0.00000
PD-02.4-08E	1	16.000	0	0.375	0.375	0.000	0.000	0.000	1.50	90	0.00	A234/WPBWPB/	0.00	0.00	0.00	250	400	207	0	364.800	0.000	0.94290	0.00000	0.00000
PD-02.4-09P	51	16.000	0	0.375	0.375	0.000	0.000	0.000	0.00	90	0.00	A53/BS/	0.00	0.00	0.00	250	400	207	0	364.800	0.000	0.94290	0.00000	0.00000
PD-02.4-10E	1	16.000	0	0.375	0.375	0.000	0.000	0.000	1.50	90	0.00	A234/WPBWPB/	0.00	0.00	0.00	250	400	207	0	364.800	0.000	0.94290	0.00000	0.00000
PD-02.4-11P	51	16.000	0	0.375	0.375	0.000	0.000	0.000	0.00	118	0.00	A53/BS/	0.00	0.00	0.00	250	400	207	0	364.800	0.000	0.94290	0.00000	0.00000
PD-02.4-12E	2	16.000	0	0.375	0.375	0.000	0.000	0.000	1.50	90	0.00	A234/WPBWPB/	0.00	0.00	0.00	250	400	207	0	364.800	0.000	0.94290	0.00000	0.00000
PD-02.4-13P	52	16.000	0	0.375	0.375	0.000	0.000	0.000	0.00	109	0.00	A53/BS/	0.00	0.00	0.00	250	400	207	0	364.800	0.000	0.94290	0.00000	0.00000
PD-02.4-14E	1	16.000	0	0.375	0.375	0.000	0.000	0.000	1.50	90	0.00	A234/WPBWPB/	0.00	0.00	0.00	250	400	207	0	364.800	0.000	0.94290	0.00000	0.00000
PD-02.4-15P	51	16.000	0	0.375	0.375	0.000	0.000	0.000	0.00	96	0.00	A53/BS/	0.00	0.00	0.00	250	400	207	0	364.800	0.000	0.94290	0.00000	0.00000
PD-02.4-16E	2	16.000	0	0.375	0.375	0.000	0.000	0.000	1.50	90	0.00	A234/WPBWPB/	0.00	0.00	0.00	250	400	207	0	364.800	0.000	0.94290	0.00000	0.00000
PD-02.4-17P	52	16.000	0	0.375	0.375	0.000	0.000	0.000	0.00	96	0.00	A53/BS/	0.00	0.00	0.00	250	400	207	0	364.800	0.000	0.94290	0.00000	0.00000
PD-02.4-18E	2	16.000	0	0.375	0.375	0.000	0.000	0.000	1.50	90	0.00	A234/WPBWPB/	0.00	0.00	0.00	250	400	207	0	364.800	0.000	0.94290	0.00000	0.00000
PD-02.4-19P	52	16.000	0	0.375	0.375	0.000	0.000	0.000	0.00	96	28.00	A53/BS/	0.00	0.00	0.00	250	400	207	0	364.800	0.000	0.94290	0.00000	0.00000
PD-02.4-29R	17	16.000	40	0.500	0.000	0.000	8.625	0.322	0.00	95	0.00	A234/WPBWPB/	0.00	0.00	0.00	250	400	207	0	364.800	0.000	0.94290	0.94290	0.00000
PD-02.4-30V	21	8.625	40	0.322	0.000	0.000	0.000	0.000	0.00	95	0.00	A216/WCCWCC/	0.00	0.00	0.00	250	400	207	0	364.800	0.000	0.94290	0.00000	0.00000
PD-02.4-31R	18	16.000	0	0.375	0.000	0.000	8.625	0.277	0.00	90	0.00	A234/WP22WP2/	0.00	0.00	0.00	250	400	207	0	364.800	0.000	0.94290	0.94290	0.00000
PD-02.4-32P	68	16.000	0	0.375	0.000	0.000	0.000	0.000	0.00	95	24.00	A335/P22P22/	0.00	0.00	0.00	250	400	207	0	364.800	0.000	0.94290	0.00000	0.00000
PD-02.4-20O	6	16.000	0	0.375	0.421	0.000	0.000	0.000	0.00	90	0.00	A53/BS/	0.00	0.00	0.00	250	400	207	0	364.800	0.000	0.94290	0.00000	0.00000
PD-02.4-21N	30	16.000	0	0.375	0.899	0.000	0.000	0.000	0.00	90	0.00	A106/CC/	0.00	0.00	0.00	250	400	207	0	364.800	0.000	0.94290	0.00000	0.00000
PD-02.4-26P	63	30.000	0	0.625	0.000	0.000	0.000	0.000	0.00	0	79.19	A516/6060/	0.00	0.00	0.00	250	400	207	0	364.800	0.000	0.00000	0.00000	0.00000
Line Name :	**RHD-01.10A_1 RH 33A to TK 33A**																							
RHD01.10A-01N	31	6.625	0	0.432	0.432	0.000	0.000	0.000	0.00	90	0.00	A106/BB/	0.00	0.00	0.00	1085	600	630	0	495.300	0.000	0.13000	0.00000	0.00000
RHD01.10A-02P	61	6.625	0	0.432	0.432	0.000	0.000	0.000	0.00	165	11.00	A106/BB/	0.00	0.00	0.00	1085	600	630	0	495.300	0.000	0.13000	0.00000	0.00000
RHD01.10A-03N	30	6.625	0	0.432	0.432	0.000	0.000	0.000	0.00	90	0.00	A106/BB/	0.00	0.00	0.00	1085	600	630	0	495.300	0.000	0.13000	0.00000	0.00000
Line Name :	**RHD-01.10A_2 TK 33A to A HDR**																							
RHD01.10A-04N	31	6.625	0	0.432	0.432	0.000	0.000	0.000	0.00	90	0.00	A106/BB/	0.00	0.00	0.00	1085	600	630	0	495.300	0.000	0.13000	0.00000	0.00000
RHD01.10A-05P	61	6.625	0	0.432	0.432	0.000	0.000	0.000	0.00	180	42.00	A106/BB/	0.00	0.00	0.00	1085	600	630	0	495.300	0.000	0.13000	0.00000	0.00000
RHD01.10A-06E	1	6.625	0	0.432	0.432	0.000	0.000	0.000	1.50	90	0.00	A234/WPBWPB/	0.00	0.00	0.00	1085	600	630	0	495.300	0.000	0.13000	0.00000	0.00000
RHD01.10A-07P	51	6.625	0	0.432	0.432	0.000	0.000	0.000	0.00	135	22.00	A106/BB/	0.00	0.00	0.00	1085	600	630	0	495.300	0.000	0.13000	0.00000	0.00000
RHD01.10A-08E	1	6.625	0	0.432	0.432	0.000	0.000	0.000	1.50	90	0.00	A234/WPBWPB/	0.00	0.00	0.00	1085	600	630	0	495.300	0.000	0.13000	0.00000	0.00000
RHD01.10A-09P	51	6.625	0	0.432	0.432	0.000	0.000	0.000	0.00	180	34.00	A106/BB/	0.00	0.00	0.00	1085	600	630	0	495.300	0.000	0.13000	0.00000	0.00000
RHD01.10A-10E	2	6.625	0	0.432	0.432	0.000	0.000	0.000	1.50	90	0.00	A234/WPBWPB/	0.00	0.00	0.00	1085	600	630	0	495.300	0.000	0.13000	0.00000	0.00000
RHD01.10A-11P	52	6.625	0	0.432	0.432	0.000	0.000	0.000	0.00	90	11.00	A106/BB/	0.00	0.00	0.00	1085	600	630	0	495.300	0.000	0.13000	0.00000	0.00000
RHD01.10A-12E	1	6.625	0	0.432	0.432	0.000	0.000	0.000	1.50	90	0.00	A234/WPBWPB/	0.00	0.00	0.00	1085	600	630	0	495.300	0.000	0.13000	0.00000	0.00000
RHD01.10A-13P	51	6.625	0	0.432	0.432	0.000	0.000	0.000	0.00	90	39.00	A106/BB/	0.00	0.00	0.00	1085	600	630	0	495.300	0.000	0.13000	0.00000	0.00000
RHD01.10A-14E	2	6.625	0	0.432	0.432	0.000	0.000	0.000	1.50	90	0.00	A234/WPBWPB/	0.00	0.00	0.00	1085	600	630	0	495.300	0.000	0.13000	0.00000	0.00000
RHD01.10A-15P	52	6.625	0	0.432	0.432	0.000	0.000	0.000	0.00	90	32.00	A106/BB/	0.00	0.00	0.00	1085	600	630	0	495.300	0.000	0.13000	0.00000	0.00000
RHD01.10A-16E	2	6.625	0	0.432	0.432	0.000	0.000	0.000	1.50	90	0.00	A234/WPBWPB/	0.00	0.00	0.00	1085	600	630	0	495.300	0.000	0.13000	0.00000	0.00000
RHD01.10A-17P	52	6.625	0	0.432	0.432	0.000	0.000	0.000	0.00	90	78.00	A106/BB/	0.00	0.00	0.00	1085	600	630	0	495.300	0.000	0.13000	0.00000	0.00000
RHD01.10A-18F	6	6.625	0	0.432	0.432	0.000	0.000	0.000	0.00	90	0.00	A106/BB/	0.00	0.00	0.00	1085	600	630	0	495.300	0.000	0.13000	0.00000	0.00000
RHD01.10A-19P	56	6.625	0	0.432	0.432	0.000	0.000	0.000	0.00	90	32.00	A106/BB/	0.00	0.00	0.00	1085	600	630	0	495.300	0.000	0.13000	0.00000	0.00000
RHD01.10A-20R	18	8.625	80	0.500	0.000	0.000	6.625	0.432	0.00	90	0.00	A234/WPBWPB/	0.00	0.00	0.00	1085	600	630	0	495.300	0.000	0.13000	0.13000	0.00000
RHD01.11A-01E	4	8.625	0	0.500	0.500	0.000	0.000	0.000	1.50	90	0.00	A234/WPBWPB/	0.00	0.00	0.00	1085	600	630	0	495.300	0.000	0.13000	0.00000	0.00000
RHD01.11A-02P	54	8.625	0	0.500	0.500	0.000	0.000	0.000	0.00	90	48.00	A106/BB/	0.00	0.00	0.00	1085	600	630	0	495.300	0.000	0.13000	0.00000	0.00000
RHD01.11A-03E	2	8.625	0	0.500	0.500	0.000	0.000	0.000	1.50	90	0.00	A234/WPBWPB/	0.00	0.00	0.00	1085	600	630	0	495.300	0.000	0.13000	0.00000	0.00000
RHD01.11A-04P	52	8.625	0	0.500	0.500	0.000	0.000	0.000	0.00	90	89.00	A106/BB/	0.00	0.00	0.00	1085	600	630	0	495.300	0.000	0.13000	0.00000	0.00000
RHD01.12A-01T	14	8.625	80	0.500	0.000	0.000	6.000	0.432	0.00	90	0.00	A234/WPBWPB/	0.00	0.00	0.00	1085	600	630	0	495.300	0.000	0.13000	0.00000	0.13000
RHD01.12A-02P	64	6.625	0	0.432	0.432	0.000	0.000	0.000	0.00	90	22.00	A106/BB/	0.00	0.00	0.00	1085	600	630	0	495.300	0.000	0.13000	0.00000	0.00000
RHD01.12A-03E	2	6.625	0	0.432	0.432	0.000	0.000	0.000	1.50	90	0.00	A234/WPBWPB/	0.00	0.00	0.00	1085	600	630	0	495.300	0.000	0.13000	0.00000	0.00000
RHD01.12A-04E	4	6.625	0	0.432	0.432	0.000	0.000	0.000	1.50	90	0.00	A234/WPBWPB/	0.00	0.00	0.00	1085	600	630	0	495.300	0.000	0.13000	0.00000	0.00000
RHD01.12A-05P	54	6.625	0	0.432	0.432	0.000	0.000	0.000	0.00	90	93.00	A106/BB/	0.00	0.00	0.00	1085	600	630	0	495.300	0.000	0.13000	0.00000	0.00000
RHD01.12A-06E	2	6.625	0	0.432	0.432	0.000	0.000	0.000	1.50	90	0.00	A234/WPBWPB/	0.00	0.00	0.00	1085	600	630	0	495.300	0.000	0.13000	0.00000	0.00000
RHD01.12A-07P	52	6.625	0	0.432	0.432	0.000	0.000	0.000	0.00	180	51.00	A106/BB/	0.00	0.00	0.00	1085	600	630	0	495.300	0.000	0.13000	0.00000	0.00000
RHD01.12A-08E	2	6.625	0	0.432	0.432	0.000	0.000	0.000	1.50	90	0.00	A234/WPBWPB/	0.00	0.00	0.00	1085	600	630	0	495.300	0.000	0.13000	0.00000	0.00000
RHD01.13A-01R	7	6.625	80	0.432	0.000	0.000	4.500	0.337	0.00	90	0.00	A234/WPBWPB/	0.00	0.00	0.00	1085	600	630	0	495.300	0.000	0.13000	0.13000	0.00000
RHD02.5A-01V	24	4.500	0	0.337	0.337	0.000	0.000	0.000	0.00	90	0.00	A-217/C5/	5.00	0.00	0.50	1085	600	334	0	495.300	0.000	0.13000	0.00000	0.00000
RHD02.5A-02R	18	6.625	80	0.432	0.000	0.000	4.500	0.337	0.00	90	0.00	A234/WPBWPB/	0.00	0.00	0.00	1085	600	334	0	495.300	0.000	0.13000	0.13000	0.00000
RHD02.6A-01P	57	6.625	0	0.432	0.432	0.000	0.000	0.000	0.00	90	30.00	A106/BB/	0.00	0.00	0.00	1085	600	334	0	495.300	0.000	0.13000	0.00000	0.00000
RHD02.6A-02E	2	6.625	0	0.432	0.432	0.000	0.000	0.000	1.50	90	0.00	A234/WPBWPB/	0.00	0.00	0.00	1085	600	334	0	495.300	0.000	0.13000	0.00000	0.00000
RHD02.6A-03P	52	6.625	0	0.432	0.432	0.000	0.000	0.000	0.00	180	43.00	A106/BB/	0.00	0.00	0.00	1085	600	334	0	495.300	0.000	0.13000	0.00000	0.00000

Component Name	Geom Code	Pipe Size OD (in)	Sch.	Tnom (in)	Tinit (in)	Tcrit (in)	Br/Small End OD (in)	Br/Small Tnom (in)	R / D Ratio	Orient Angle (Deg.)	Pipe Length (in)	Spec/Type/ Class	Material Cr. (%)	Cu. (%)	Mo. (%)	Design Press. (psig)	Design Temp. (Deg. F)	Op. Press. (psig)	Op. Temp. (Deg. F)	Op. Enth. (Btu/lbm)	Op. Qual.	Flow Rate U/S Mn. (Mlbm/hr)	D/S Mn.	Br.
RHD02.6A-04E	1	6.625	0	0.432	0.432	0.000	0.000	0.000	1.50	90	0.00	A234/WPBWPB/	0.00	0.00	0.00	1085	600	334	0	495.300	0.000	0.13000	0.00000	0.00000
RHD02.6A-05P	51	6.625	0	0.432	0.000	0.000	0.000	0.000	0.00	135	20.00	A106/BB/	0.00	0.00	0.00	1085	600	334	0	495.300	0.000	0.13000	0.00000	0.00000
Line Name : RHD-01.10B_1 RH 33B to TK 33B																								
RHD01.10B-01N	31	6.625	0	0.432	0.432	0.000	0.000	0.000	0.00	90	0.00	A106/BB/	0.00	0.00	0.00	1085	600	630	0	495.300	0.000	0.13000	0.00000	0.00000
RHD01.10B-02P	61	6.625	0	0.432	0.432	0.000	0.000	0.000	0.00	165	11.00	A106/BB/	0.00	0.00	0.00	1085	600	630	0	495.300	0.000	0.13000	0.00000	0.00000
RHD01.10B-03N	30	6.625	0	0.432	0.432	0.000	0.000	0.000	0.00	90	0.00	A106/BB/	0.00	0.00	0.00	1085	600	630	0	495.300	0.000	0.13000	0.00000	0.00000
Line Name : RHD-01.10B_2 TK 33B to B HDR																								
RHD01.10B-04N	31	6.625	0	0.432	0.432	0.000	0.000	0.000	0.00	90	0.00	A106/BB/	0.00	0.00	0.00	1085	600	630	0	495.300	0.000	0.13000	0.00000	0.00000
RHD01.10B-05P	61	6.625	0	0.432	0.432	0.000	0.000	0.000	0.00	180	39.00	A106/BB/	0.00	0.00	0.00	1085	600	630	0	495.300	0.000	0.13000	0.00000	0.00000
RHD01.10B-06E	1	6.625	0	0.432	0.432	0.000	0.000	0.000	1.50	90	0.00	A234/WPBWPB/	0.00	0.00	0.00	1085	600	630	0	495.300	0.000	0.13000	0.00000	0.00000
RHD01.10B-07P	51	6.625	0	0.432	0.432	0.000	0.000	0.000	0.00	135	14.00	A106/BB/	0.00	0.00	0.00	1085	600	630	0	495.300	0.000	0.13000	0.00000	0.00000
RHD01.10B-08E	2	6.625	0	0.432	0.432	0.000	0.000	0.000	1.50	90	0.00	A234/WPBWPB/	0.00	0.00	0.00	1085	600	630	0	495.300	0.000	0.13000	0.00000	0.00000
RHD01.10B-09P	52	6.625	0	0.432	0.432	0.000	0.000	0.000	0.00	90	74.00	A106/BB/	0.00	0.00	0.00	1085	600	630	0	495.300	0.000	0.13000	0.00000	0.00000
RHD01.10B-10E	2	6.625	0	0.432	0.432	0.000	0.000	0.000	1.50	90	0.00	A234/WPBWPB/	0.00	0.00	0.00	1085	600	630	0	495.300	0.000	0.13000	0.00000	0.00000
RHD01.10B-11P	52	6.625	0	0.432	0.432	0.000	0.000	0.000	0.00	180	4.00	A106/BB/	0.00	0.00	0.00	1085	600	630	0	495.300	0.000	0.13000	0.00000	0.00000
RHD01.10B-12E	4	6.625	0	0.432	0.432	0.000	0.000	0.000	1.50	90	0.00	A234/WPBWPB/	0.00	0.00	0.00	1085	600	630	0	495.300	0.000	0.13000	0.00000	0.00000
RHD01.10B-13P_1	54	6.625	0	0.432	0.432	0.000	0.000	0.000	0.00	90	99.38	A106/BB/	0.00	0.00	0.00	1085	600	630	0	495.300	0.000	0.13000	0.00000	0.00000
RHD01.10B-13P_2	9	6.625	0	0.432	0.432	0.000	0.000	0.000	0.00	90	725.63	A106/BB/	0.00	0.00	0.00	1085	600	630	0	495.300	0.000	0.13000	0.00000	0.00000
RHD01.10B-14E	2	6.625	0	0.432	0.432	0.000	0.000	0.000	1.00	90	0.00	A234/WPBWPB/	0.00	0.00	0.00	1085	600	630	0	495.300	0.000	0.13000	0.00000	0.00000
RHD01.10B-15E	4	6.625	0	0.432	0.432	0.000	0.000	0.000	1.50	90	0.00	A234/WPBWPB/	0.00	0.00	0.00	1085	600	630	0	495.300	0.000	0.13000	0.00000	0.00000
RHD01.10B-16P	54	6.625	0	0.432	0.432	0.000	0.000	0.000	0.00	90	67.00	A106/BB/	0.00	0.00	0.00	1085	600	630	0	495.300	0.000	0.13000	0.00000	0.00000
RHD01.10B-17E	2	6.625	0	0.432	0.432	0.000	0.000	0.000	1.50	90	0.00	A234/WPBWPB/	0.00	0.00	0.00	1085	600	630	0	495.300	0.000	0.13000	0.00000	0.00000
RHD01.10B-18P	52	6.625	0	0.432	0.432	0.000	0.000	0.000	0.00	90	57.00	A106/BB/	0.00	0.00	0.00	1085	600	630	0	495.300	0.000	0.13000	0.00000	0.00000
RHD01.10B-19E	2	6.625	0	0.432	0.432	0.000	0.000	0.000	1.50	90	0.00	A234/WPBWPB/	0.00	0.00	0.00	1085	600	630	0	495.300	0.000	0.13000	0.00000	0.00000
RHD01.10B-20P	52	6.625	0	0.432	0.432	0.000	0.000	0.000	0.00	90	14.00	A106/BB/	0.00	0.00	0.00	1085	600	630	0	495.300	0.000	0.13000	0.00000	0.00000
RHD01.10B-21E	2	6.625	0	0.432	0.432	0.000	0.000	0.000	1.50	90	0.00	A234/WPBWPB/	0.00	0.00	0.00	1085	600	630	0	495.300	0.000	0.13000	0.00000	0.00000
RHD01.10B-22E	4	6.625	0	0.432	0.432	0.000	0.000	0.000	1.50	90	0.00	A234/WPBWPB/	0.00	0.00	0.00	1085	600	630	0	495.300	0.000	0.13000	0.00000	0.00000
RHD01.10B-23P	54	6.625	0	0.432	0.432	0.000	0.000	0.000	0.00	90	89.00	A106/BB/	0.00	0.00	0.00	1085	600	630	0	495.300	0.000	0.13000	0.00000	0.00000
RHD01.10B-24E	2	6.625	0	0.432	0.432	0.000	0.000	0.000	1.50	90	0.00	A234/WPBWPB/	0.00	0.00	0.00	1085	600	630	0	495.300	0.000	0.13000	0.00000	0.00000
RHD01.10B-25P_1	52	6.625	0	0.432	0.432	0.000	0.000	0.000	0.00	90	99.38	A106/BB/	0.00	0.00	0.00	1085	600	630	0	495.300	0.000	0.13000	0.00000	0.00000
RHD01.10B-25P_2	9	6.625	0	0.432	0.432	0.000	0.000	0.000	0.00	90	69.63	A106/BB/	0.00	0.00	0.00	1085	600	630	0	495.300	0.000	0.13000	0.00000	0.00000
RHD01.10B-26F	6	6.625	0	0.432	0.432	0.000	0.000	0.000	0.00	90	0.00	A106/BB/	0.00	0.00	0.00	1085	600	630	0	495.300	0.000	0.13000	0.00000	0.00000
RHD01.10B-27P	56	6.625	0	0.432	0.432	0.000	0.000	0.000	0.00	90	51.00	A106/BB/	0.00	0.00	0.00	1085	600	630	0	495.300	0.000	0.13000	0.00000	0.00000
RHD01.10B-28E	2	6.625	0	0.432	0.432	0.000	0.000	0.000	1.50	90	0.00	A234/WPBWPB/	0.00	0.00	0.00	1085	600	630	0	495.300	0.000	0.13000	0.00000	0.00000
RHD01.10B-29P	52	6.625	0	0.432	0.432	0.000	0.000	0.000	0.00	180	100.00	A106/BB/	0.00	0.00	0.00	1085	600	630	0	495.300	0.000	0.13000	0.00000	0.00000
RHD01.10B-30E	2	6.625	0	0.432	0.432	0.000	0.000	0.000	1.50	90	0.00	A234/WPBWPB/	0.00	0.00	0.00	1085	600	630	0	495.300	0.000	0.13000	0.00000	0.00000
RHD01.10B-31P	52	6.625	0	0.432	0.432	0.000	0.000	0.000	0.00	90	46.00	A106/BB/	0.00	0.00	0.00	1085	600	630	0	495.300	0.000	0.13000	0.00000	0.00000
RHD01.10B-32E	1	6.625	0	0.432	0.432	0.000	0.000	0.000	1.50	90	0.00	A234/WPBWPB/	0.00	0.00	0.00	1085	600	630	0	495.300	0.000	0.13000	0.00000	0.00000
RHD01.10B-33P	51	6.625	0	0.432	0.432	0.000	0.000	0.000	0.00	90	75.00	A106/BB/	0.00	0.00	0.00	1085	600	630	0	495.300	0.000	0.13000	0.00000	0.00000
RHD01.10B-34E	1	6.625	0	0.432	0.432	0.000	0.000	0.000	1.50	90	0.00	A234/WPBWPB/	0.00	0.00	0.00	1085	600	630	0	495.300	0.000	0.13000	0.00000	0.00000
RHD01.10B-35P	51	6.625	0	0.432	0.432	0.000	0.000	0.000	0.00	90	17.00	A106/BB/	0.00	0.00	0.00	1085	600	630	0	495.300	0.000	0.13000	0.00000	0.00000
RHD01.10B-36E	1	6.625	0	0.432	0.432	0.000	0.000	0.000	1.50	90	0.00	A234/WPBWPB/	0.00	0.00	0.00	1085	600	630	0	495.300	0.000	0.13000	0.00000	0.00000
RHD01.10B-37P_1	51	6.625	0	0.432	0.432	0.000	0.000	0.000	0.00	90	99.38	A106/BB/	0.00	0.00	0.00	1085	600	630	0	495.300	0.000	0.13000	0.00000	0.00000
RHD01.10B-37P_2	9	6.625	0	0.432	0.432	0.000	0.000	0.000	0.00	90	156.63	A106/BB/	0.00	0.00	0.00	1085	600	630	0	495.300	0.000	0.13000	0.00000	0.00000
RHD01.10B-38E	1	6.625	0	0.432	0.432	0.000	0.000	0.000	1.50	90	0.00	A234/WPBWPB/	0.00	0.00	0.00	1085	600	630	0	495.300	0.000	0.13000	0.00000	0.00000
RHD01.10B-39P	51	6.625	0	0.432	0.432	0.000	0.000	0.000	0.00	90	17.00	A106/BB/	0.00	0.00	0.00	1085	600	630	0	495.300	0.000	0.13000	0.00000	0.00000
RHD01.10B-40E	1	6.625	0	0.432	0.432	0.000	0.000	0.000	1.50	90	0.00	A234/WPBWPB/	0.00	0.00	0.00	1085	600	630	0	495.300	0.000	0.13000	0.00000	0.00000
RHD01.10B-41P	51	6.625	0	0.432	0.432	0.000	0.000	0.000	0.00	90	56.00	A106/BB/	0.00	0.00	0.00	1085	600	630	0	495.300	0.000	0.13000	0.00000	0.00000
RHD01.10B-42E	2	6.625	0	0.432	0.432	0.000	0.000	0.000	1.50	90	0.00	A234/WPBWPB/	0.00	0.00	0.00	1085	600	630	0	495.300	0.000	0.13000	0.00000	0.00000
RHD01.10B-43P	52	6.625	0	0.432	0.432	0.000	0.000	0.000	0.00	0	57.00	A106/BB/	0.00	0.00	0.00	1085	600	630	0	495.300	0.000	0.13000	0.00000	0.00000
RHD01.10B-44E	2	6.625	0	0.432	0.432	0.000	0.000	0.000	1.50	90	0.00	A234/WPBWPB/	0.00	0.00	0.00	1085	600	630	0	495.300	0.000	0.13000	0.00000	0.00000
RHD01.10B-45P	52	6.625	0	0.432	0.432	0.000	0.000	0.000	0.00	90	63.00	A106/BB/	0.00	0.00	0.00	1085	600	630	0	495.300	0.000	0.13000	0.00000	0.00000
RHD01.10B-46E	2	6.625	0	0.432	0.432	0.000	0.000	0.000	1.50	90	0.00	A234/WPBWPB/	0.00	0.00	0.00	1085	600	630	0	495.300	0.000	0.13000	0.00000	0.00000
RHD01.10B-47P_1	52	6.625	0	0.432	0.432	0.000	0.000	0.000	0.00	90	99.38	A106/BB/	0.00	0.00	0.00	1085	600	630	0	495.300	0.000	0.13000	0.00000	0.00000
RHD01.10B-47P_2	9	6.625	0	0.432	0.432	0.000	0.000	0.000	0.00	90	167.63	A106/BB/	0.00	0.00	0.00	1085	600	630	0	495.300	0.000	0.13000	0.00000	0.00000
RHD01.10B-48E	2	6.625	0	0.432	0.432	0.000	0.000	0.000	1.50	90	0.00	A234/WPBWPB/	0.00	0.00	0.00	1085	600	630	0	495.300	0.000	0.13000	0.00000	0.00000
RHD01.10B-49P	52	6.625	0	0.432	0.432	0.000	0.000	0.000	0.00	90	54.00	A106/BB/	0.00	0.00	0.00	1085	600	630	0	495.300	0.000	0.13000	0.00000	0.00000
RHD01.10B-50E	2	6.625	0	0.432	0.432	0.000	0.000	0.000	1.50	90	0.00	A234/WPBWPB/	0.00	0.00	0.00	1085	600	630	0	495.300	0.000	0.13000	0.00000	0.00000
RHD01.10B-51P	52	6.625	0	0.432	0.432	0.000	0.000	0.000	0.00	90	147.00	A106/BB/	0.00	0.00	0.00	1085	600	630	0	495.300	0.000	0.13000	0.00000	0.00000
RHD01.10B-52T	10	6.625	0	0.432	0.432	0.000	6.000	0.432	0.00	90	0.00	A234/WPBWPB/	0.00	0.00	0.00	1085	600	630	0	495.300	0.000	0.00000	0.13000	0.13000
RHD01.10B-53P	60	6.625	0	0.432	0.432	0.000	0.000	0.000	0.00	0	30.00	A106/BB/	0.00	0.00	0.00	1085	600	630	0	495.300	0.000	0.13000	0.00000	0.00000

Component Name	Geom Code	Pipe Size OD (in)	Sch.	Tnom (in)	Tinit (in)	Tcrit (in)	Br/Small End OD (in)	Br/Small Tnom (in)	R / D Ratio	Orient Angle (Deg.)	Pipe Length (in)	Spec/Type/ Class	Material Cr. (%)	Cu. (%)	Mo. (%)	Design Press. (psig)	Design Temp. (Deg. F)	Op. Press. (psig)	Op. Temp. (Deg. F)	Op. Enth. (Btu/lbm)	Op. Qual.	Flow Rate U/S Mn. (Mlbm/hr)	D/S Mn. (Mlbm/hr)	Br.
RHD01.10B-54E	2	6.625	0	0.432	0.432	0.000	0.000	0.000	1.50	90	0.00	A234/WPBWPB/	0.00	0.00	0.00	1085	600	630	0	495.300	0.000	0.13000	0.00000	0.00000
RHD01.10B-55P	52	6.625	0	0.432	0.432	0.000	0.000	0.000	0.00	90	16.00	A106/BB/	0.00	0.00	0.00	1085	600	630	0	495.300	0.000	0.13000	0.00000	0.00000
RHD01.10B-56E	2	6.625	0	0.432	0.432	0.000	0.000	0.000	1.50	90	0.00	A234/WPBWPB/	0.00	0.00	0.00	1085	600	630	0	495.300	0.000	0.13000	0.00000	0.00000
RHD01.10B-57P_1	52	6.625	0	0.432	0.432	0.000	0.000	0.000	0.00	90	99.38	A106/BB/	0.00	0.00	0.00	1085	600	630	0	495.300	0.000	0.13000	0.00000	0.00000
RHD01.10B-57P_2	9	6.625	0	0.432	0.432	0.000	0.000	0.000	0.00	90	830.63	A106/BB/	0.00	0.00	0.00	1085	600	630	0	495.300	0.000	0.13000	0.00000	0.00000
RHD01.10B-58E	2	6.625	0	0.432	0.432	0.000	0.000	0.000	1.50	90	0.00	A234/WPBWPB/	0.00	0.00	0.00	1085	600	630	0	495.300	0.000	0.13000	0.00000	0.00000
RHD01.10B-59P	52	6.625	0	0.432	0.432	0.000	0.000	0.000	0.00	180	21.00	A106/BB/	0.00	0.00	0.00	1085	600	630	0	495.300	0.000	0.13000	0.00000	0.00000
RHD01.10B-60E	2	6.625	0	0.432	0.432	0.000	0.000	0.000	1.50	90	0.00	A234/WPBWPB/	0.00	0.00	0.00	1085	600	630	0	495.300	0.000	0.13000	0.00000	0.00000
RHD01.10B-61P_1	52	6.625	0	0.432	0.432	0.000	0.000	0.000	0.00	90	99.38	A106/BB/	0.00	0.00	0.00	1085	600	630	0	495.300	0.000	0.13000	0.00000	0.00000
RHD01.10B-61P_2	9	6.625	0	0.432	0.432	0.000	0.000	0.000	0.00	90	28.63	A106/BB/	0.00	0.00	0.00	1085	600	630	0	495.300	0.000	0.13000	0.00000	0.00000
RHD01.10B-62E	2	6.625	0	0.432	0.432	0.000	0.000	0.000	1.50	90	0.00	A234/WPBWPB/	0.00	0.00	0.00	1085	600	630	0	495.300	0.000	0.13000	0.00000	0.00000
RHD01.10B-63E	4	6.625	0	0.432	0.432	0.000	0.000	0.000	1.00	90	0.00	A234/WPBWPB/	0.00	0.00	0.00	1085	600	630	0	495.300	0.000	0.13000	0.00000	0.00000
RHD01.10B-64R	18	8.625	80	0.500	0.000	0.000	6.625	0.432	0.00	90	0.00	A234/WPBWPB/	0.00	0.00	0.00	1085	600	630	0	495.300	0.000	0.13000	0.13000	0.00000
RHD01.11B-01P_1	68	8.625	0	0.500	0.500	0.000	0.000	0.000	0.00	90	99.38	A106/BB/	0.00	0.00	0.00	1085	600	630	0	495.300	0.000	0.13000	0.00000	0.00000
RHD01.11B-01P_2	9	8.625	0	0.500	0.500	0.000	0.000	0.000	0.00	90	71.63	A106/BB/	0.00	0.00	0.00	1085	600	630	0	495.300	0.000	0.13000	0.00000	0.00000
RHD01.11B-02E	2	8.625	0	0.500	0.500	0.000	0.000	0.000	1.50	90	0.00	A234/WPBWPB/	0.00	0.00	0.00	1085	600	630	0	495.300	0.000	0.13000	0.00000	0.00000
RHD01.11B-03P	52	8.625	0	0.500	0.500	0.000	0.000	0.000	0.00	180	60.00	A106/BB/	0.00	0.00	0.00	1085	600	630	0	495.300	0.000	0.13000	0.00000	0.00000
RHD01.11B-04E	2	8.625	0	0.500	0.500	0.000	0.000	0.000	1.50	90	0.00	A234/WPBWPB/	0.00	0.00	0.00	1085	600	630	0	495.300	0.000	0.13000	0.00000	0.00000
RHD01.11B-05P	52	8.625	0	0.500	0.500	0.000	0.000	0.000	0.00	90	24.00	A106/BB/	0.00	0.00	0.00	1085	600	630	0	495.300	0.000	0.13000	0.00000	0.00000
RHD01.12B-01R	17	8.625	80	0.500	0.000	0.000	4.500	0.337	0.00	90	0.00	A234/WPBWPB/	0.00	0.00	0.00	1085	600	630	0	495.300	0.000	0.13000	0.13000	0.00000
RHD02.5B-01V	24	4.500	0	0.337	0.337	0.000	0.000	0.000	0.00	90	0.00	A-217/C5/	5.00	0.00	0.50	1085	600	334	0	495.300	0.000	0.13000	0.00000	0.00000
RHD02.5B-02R	18	8.625	80	0.500	0.000	0.000	4.500	0.337	0.00	90	0.00	A234/WPBWPB/	0.00	0.00	0.00	1085	600	334	0	495.300	0.000	0.13000	0.13000	0.00000
RHD02.6B-01E	4	8.625	80	0.500	0.559	0.000	0.000	0.000	1.50	90	0.00	A234/WPBWPB/	0.00	0.00	0.00	1085	600	334	0	495.300	0.000	0.13000	0.00000	0.00000
RHD02.6B-02P	54	8.625	80	0.500	0.528	0.000	0.000	0.000	0.00	180	54.00	A106/BB/	0.00	0.00	0.00	1085	600	334	0	495.300	0.000	0.13000	0.00000	0.00000
Line Name : RHD-01.1A_1 RH 31A to TK 31A																								
RHD01.1A-01N	31	6.625	0	0.432	0.432	0.000	0.000	0.000	0.00	90	0.00	A106/BB/	0.00	0.00	0.00	1085	600	630	0	495.300	0.000	0.13000	0.00000	0.00000
RHD01.1A-02P	61	6.625	0	0.432	0.432	0.000	0.000	0.000	0.00	165	10.00	A106/BB/	0.00	0.00	0.00	1085	600	630	0	495.300	0.000	0.13000	0.00000	0.00000
RHD01.1A-03N	30	6.625	0	0.432	0.432	0.000	0.000	0.000	0.00	90	0.00	A106/BB/	0.00	0.00	0.00	1085	600	630	0	495.300	0.000	0.13000	0.00000	0.00000
Line Name : RHD-01.1A_2 TK 31A to A HDR																								
RHD01.1A-04N	31	6.625	0	0.432	0.432	0.000	0.000	0.000	0.00	90	0.00	A106/BB/	0.00	0.00	0.00	1085	600	630	0	495.300	0.000	0.13000	0.00000	0.00000
RHD01.1A-05P	61	6.625	0	0.432	0.432	0.000	0.000	0.000	0.00	180	85.00	A106/BB/	0.00	0.00	0.00	1085	600	630	0	495.300	0.000	0.13000	0.00000	0.00000
RHD01.1A-06E	2	6.625	0	0.432	0.432	0.000	0.000	0.000	1.50	90	0.00	A234/WPBWPB/	0.00	0.00	0.00	1085	600	630	0	495.300	0.000	0.13000	0.00000	0.00000
RHD01.1A-07P_1	52	6.625	0	0.432	0.432	0.000	0.000	0.000	0.00	90	99.38	A106/BB/	0.00	0.00	0.00	1085	600	630	0	495.300	0.000	0.13000	0.00000	0.00000
RHD01.1A-07P_2	9	6.625	0	0.432	0.432	0.000	0.000	0.000	0.00	90	17.63	A106/BB/	0.00	0.00	0.00	1085	600	630	0	495.300	0.000	0.13000	0.00000	0.00000
RHD01.1A-08E	2	6.625	0	0.432	0.432	0.000	0.000	0.000	1.50	90	0.00	A234/WPBWPB/	0.00	0.00	0.00	1085	600	630	0	495.300	0.000	0.13000	0.00000	0.00000
RHD01.1A-09P_1	52	6.625	0	0.432	0.432	0.000	0.000	0.000	0.00	90	99.38	A106/BB/	0.00	0.00	0.00	1085	600	630	0	495.300	0.000	0.13000	0.00000	0.00000
RHD01.1A-09P_2	9	6.625	0	0.432	0.432	0.000	0.000	0.000	0.00	90	131.63	A106/BB/	0.00	0.00	0.00	1085	600	630	0	495.300	0.000	0.13000	0.00000	0.00000
RHD01.1A-10E	2	6.625	0	0.432	0.432	0.000	0.000	0.000	1.50	90	0.00	A234/WPBWPB/	0.00	0.00	0.00	1085	600	630	0	495.300	0.000	0.13000	0.00000	0.00000
RHD01.1A-11P	52	6.625	0	0.432	0.432	0.000	0.000	0.000	0.00	90	44.00	A106/BB/	0.00	0.00	0.00	1085	600	630	0	495.300	0.000	0.13000	0.00000	0.00000
RHD01.1A-12E	2	6.625	0	0.432	0.432	0.000	0.000	0.000	1.50	90	0.00	A234/WPBWPB/	0.00	0.00	0.00	1085	600	630	0	495.300	0.000	0.13000	0.00000	0.00000
RHD01.1A-13P_1	52	6.625	0	0.432	0.432	0.000	0.000	0.000	0.00	90	99.38	A106/BB/	0.00	0.00	0.00	1085	600	630	0	495.300	0.000	0.13000	0.00000	0.00000
RHD01.1A-13P_2	9	6.625	0	0.432	0.432	0.000	0.000	0.000	0.00	90	23.63	A106/BB/	0.00	0.00	0.00	1085	600	630	0	495.300	0.000	0.13000	0.00000	0.00000
RHD01.1A-14E	1	6.625	0	0.432	0.432	0.000	0.000	0.000	1.50	90	0.00	A234/WPBWPB/	0.00	0.00	0.00	1085	600	630	0	495.300	0.000	0.13000	0.00000	0.00000
RHD01.1A-15P	51	6.625	0	0.432	0.432	0.000	0.000	0.000	0.00	45	10.00	A106/BB/	0.00	0.00	0.00	1085	600	630	0	495.300	0.000	0.13000	0.00000	0.00000
RHD01.1A-16E	2	6.625	0	0.432	0.432	0.000	0.000	0.000	1.50	90	0.00	A234/WPBWPB/	0.00	0.00	0.00	1085	600	630	0	495.300	0.000	0.13000	0.00000	0.00000
RHD01.1A-17P	52	6.625	0	0.432	0.432	0.000	0.000	0.000	0.00	90	55.00	A106/BB/	0.00	0.00	0.00	1085	600	630	0	495.300	0.000	0.13000	0.00000	0.00000
RHD01.1A-18E	2	6.625	0	0.432	0.432	0.000	0.000	0.000	1.50	90	0.00	A234/WPBWPB/	0.00	0.00	0.00	1085	600	630	0	495.300	0.000	0.13000	0.00000	0.00000
RHD01.1A-19P	52	6.625	0	0.432	0.432	0.000	0.000	0.000	0.00	180	4.00	A106/BB/	0.00	0.00	0.00	1085	600	630	0	495.300	0.000	0.13000	0.00000	0.00000
RHD01.1A-20E	4	6.625	0	0.432	0.432	0.000	0.000	0.000	1.50	90	0.00	A234/WPBWPB/	0.00	0.00	0.00	1085	600	630	0	495.300	0.000	0.13000	0.00000	0.00000
RHD01.1A-21P_1	54	6.625	0	0.432	0.432	0.000	0.000	0.000	0.00	90	99.38	A106/BB/	0.00	0.00	0.00	1085	600	630	0	495.300	0.000	0.13000	0.00000	0.00000
RHD01.1A-21P_2	9	6.625	0	0.432	0.432	0.000	0.000	0.000	0.00	90	75.63	A106/BB/	0.00	0.00	0.00	1085	600	630	0	495.300	0.000	0.13000	0.00000	0.00000
RHD01.1A-22E	1	6.625	0	0.432	0.432	0.000	0.000	0.000	1.50	90	0.00	A234/WPBWPB/	0.00	0.00	0.00	1085	600	630	0	495.300	0.000	0.13000	0.00000	0.00000
RHD01.1A-23P	51	6.625	0	0.432	0.432	0.000	0.000	0.000	0.00	135	12.00	A106/BB/	0.00	0.00	0.00	1085	600	630	0	495.300	0.000	0.13000	0.00000	0.00000
RHD01.1A-24E	1	6.625	0	0.432	0.432	0.000	0.000	0.000	1.50	90	0.00	A234/WPBWPB/	0.00	0.00	0.00	1085	600	630	0	495.300	0.000	0.13000	0.00000	0.00000
RHD01.1A-25E	3	6.625	0	0.432	0.432	0.000	0.000	0.000	1.50	90	0.00	A234/WPBWPB/	0.00	0.00	0.00	1085	600	630	0	495.300	0.000	0.13000	0.00000	0.00000
RHD01.1A-26P	53	6.625	0	0.432	0.432	0.000	0.000	0.000	0.00	90	5.00	A106/BB/	0.00	0.00	0.00	1085	600	630	0	495.300	0.000	0.13000	0.00000	0.00000
RHD01.1A-27E	3	6.625	0	0.432	0.432	0.000	0.000	0.000	1.50	90	0.00	A234/WPBWPB/	0.00	0.00	0.00	1085	600	630	0	495.300	0.000	0.13000	0.00000	0.00000
RHD01.1A-28P_1	53	6.625	0	0.432	0.432	0.000	0.000	0.000	0.00	90	99.38	A106/BB/	0.00	0.00	0.00	1085	600	630	0	495.300	0.000	0.13000	0.00000	0.00000
RHD01.1A-28P_2	9	6.625	0	0.432	0.432	0.000	0.000	0.000	0.00	90	67.63	A106/BB/	0.00	0.00	0.00	1085	600	630	0	495.300	0.000	0.13000	0.00000	0.00000

Component Name	Geom Code	Pipe Size OD (in)	Sch.	Tnom (in)	Tinit (in)	Tcrit (in)	Br/Small End OD (in)	Br/Small Tnom (in)	R / D Ratio	Orient Angle (Deg.)	Pipe Length (in)	Spec/Type/ Class	Material Cr. (%)	Cu. (%)	Mo. (%)	Design Press. (psig)	Design Temp. (Deg. F)	Op. Press. (psig)	Op. Temp. (Deg. F)	Op. Enth. (Btu/lbm)	Op. Qual.	Flow Rate U/S Mn.	D/S Mn. (Mlbm/hr)	Br.
RHD01.1A-29E	2	6.625	0	0.432	0.432	0.000	0.000	0.000	1.50	90	0.00	A234/WPBWPB/	0.00	0.00	0.00	1085	600	630	0	495.300	0.000	0.13000	0.00000	0.00000
RHD01.1A-30P	52	6.625	0	0.432	0.432	0.000	0.000	0.000	0.00	90	75.00	A106/BB/	0.00	0.00	0.00	1085	600	630	0	495.300	0.000	0.13000	0.00000	0.00000
RHD01.1A-31E	2	6.625	0	0.432	0.432	0.000	0.000	0.000	1.00	90	0.00	A234/WPBWPB/	0.00	0.00	0.00	1085	600	630	0	495.300	0.000	0.13000	0.00000	0.00000
RHD01.1A-32P	52	6.625	0	0.432	0.432	0.000	0.000	0.000	0.00	180	4.00	A106/BB/	0.00	0.00	0.00	1085	600	630	0	495.300	0.000	0.13000	0.00000	0.00000
RHD01.1A-33E	4	6.625	0	0.432	0.432	0.000	0.000	0.000	1.00	90	0.00	A234/WPBWPB/	0.00	0.00	0.00	1085	600	630	0	495.300	0.000	0.13000	0.00000	0.00000
RHD01.1A-34P_1	54	6.625	80	0.432	0.475	0.000	0.000	0.000	0.00	90	99.38	A106/BB/	0.00	0.00	0.00	1085	600	630	0	495.300	0.000	0.13000	0.00000	0.00000
RHD01.1A-34P_2	9	6.625	80	0.432	0.475	0.000	0.000	0.000	0.00	90	73.63	A106/BB/	0.00	0.00	0.00	1085	600	630	0	495.300	0.000	0.13000	0.00000	0.00000
RHD01.1A-35F	6	6.625	0	0.432	0.432	0.000	0.000	0.000	0.00	90	0.00	A106/BB/	0.00	0.00	0.00	1085	600	630	0	495.300	0.000	0.13000	0.00000	0.00000
RHD01.1A-36P	56	6.625	80	0.432	0.462	0.000	0.000	0.000	0.00	90	42.00	A106/BB/	0.00	0.00	0.00	1085	600	630	0	495.300	0.000	0.13000	0.00000	0.00000
RHD01.1A-37T	15	6.625	0	0.432	0.432	0.000	6.000	0.432	0.00	90	0.00	A234/WPBWPB/	0.00	0.00	0.00	1085	600	630	0	495.300	0.000	0.13000	0.13000	0.00000
RHD01.1A-38P	65	6.625	0	0.432	0.432	0.000	0.000	0.000	0.00	90	14.00	A106/BB/	0.00	0.00	0.00	1085	600	630	0	495.300	0.000	0.13000	0.00000	0.00000
RHD01.1A-39E	1	6.625	0	0.432	0.432	0.000	0.000	0.000	1.50	90	0.00	A234/WPBWPB/	0.00	0.00	0.00	1085	600	630	0	495.300	0.000	0.13000	0.00000	0.00000
RHD01.1A-40P	51	6.625	0	0.432	0.432	0.000	0.000	0.000	0.00	90	56.00	A106/BB/	0.00	0.00	0.00	1085	600	630	0	495.300	0.000	0.13000	0.00000	0.00000
RHD01.1A-41E	1	6.625	0	0.432	0.432	0.000	0.000	0.000	1.50	90	0.00	A234/WPBWPB/	0.00	0.00	0.00	1085	600	630	0	495.300	0.000	0.13000	0.00000	0.00000
RHD01.1A-42P_1	51	6.625	0	0.432	0.432	0.000	0.000	0.000	0.00	90	99.38	A106/BB/	0.00	0.00	0.00	1085	600	630	0	495.300	0.000	0.13000	0.00000	0.00000
RHD01.1A-42P_2	9	6.625	0	0.432	0.432	0.000	0.000	0.000	0.00	90	43.63	A106/BB/	0.00	0.00	0.00	1085	600	630	0	495.300	0.000	0.13000	0.00000	0.00000
RHD01.1A-43E	2	6.625	0	0.432	0.432	0.000	0.000	0.000	1.50	90	0.00	A234/WPBWPB/	0.00	0.00	0.00	1085	600	630	0	495.300	0.000	0.13000	0.00000	0.00000
RHD01.1A-44P_1	52	6.625	0	0.432	0.432	0.000	0.000	0.000	0.00	90	99.38	A106/BB/	0.00	0.00	0.00	1085	600	630	0	495.300	0.000	0.13000	0.00000	0.00000
RHD01.1A-44P_2	9	6.625	0	0.432	0.432	0.000	0.000	0.000	0.00	90	37.63	A106/BB/	0.00	0.00	0.00	1085	600	630	0	495.300	0.000	0.13000	0.00000	0.00000
RHD01.1A-45E	2	6.625	0	0.432	0.432	0.000	0.000	0.000	1.50	90	0.00	A234/WPBWPB/	0.00	0.00	0.00	1085	600	630	0	495.300	0.000	0.13000	0.00000	0.00000
RHD01.1A-46P	52	6.625	0	0.432	0.432	0.000	0.000	0.000	0.00	180	53.00	A106/BB/	0.00	0.00	0.00	1085	600	630	0	495.300	0.000	0.13000	0.00000	0.00000
RHD01.1A-47E	2	6.625	0	0.432	0.432	0.000	0.000	0.000	1.50	90	0.00	A234/WPBWPB/	0.00	0.00	0.00	1085	600	630	0	495.300	0.000	0.13000	0.00000	0.00000
RHD01.1A-48P	52	6.625	0	0.432	0.432	0.000	0.000	0.000	0.00	90	20.00	A106/BB/	0.00	0.00	0.00	1085	600	630	0	495.300	0.000	0.13000	0.00000	0.00000
RHD01.2A-01R	17	6.625	80	0.432	0.000	0.000	4.500	0.337	0.00	90	0.00	A234/WPBWPB/	0.00	0.00	0.00	1085	600	630	0	495.300	0.000	0.13000	0.13000	0.00000
RHD02.1A-01V	24	4.500	0	0.337	0.337	0.000	0.000	0.000	0.00	90	0.00	A-217/C5/	5.00	0.00	0.50	1085	600	334	0	495.300	0.000	0.13000	0.00000	0.00000
RHD02.1A-02R	18	6.625	80	0.432	0.000	0.000	4.500	0.337	0.00	90	0.00	A234/WPBWPB/	0.00	0.00	0.00	1085	600	334	0	495.300	0.000	0.13000	0.13000	0.00000
RHD02.2A-01P	68	6.625	0	0.432	0.432	0.000	0.000	0.000	0.00	90	12.00	A106/BB/	0.00	0.00	0.00	1085	600	334	0	495.300	0.000	0.13000	0.00000	0.00000
RHD02.2A-02E	2	6.625	80	0.432	0.473	0.000	0.000	0.000	1.50	90	0.00	A234/WPBWPB/	0.00	0.00	0.00	1085	600	334	0	495.300	0.000	0.13000	0.00000	0.00000
RHD02.2A-03P	52	6.625	0	0.432	0.432	0.000	0.000	0.000	0.00	180	33.00	A106/BB/	0.00	0.00	0.00	1085	600	334	0	495.300	0.000	0.13000	0.00000	0.00000
RHD02.2A-04E	1	6.625	0	0.432	0.432	0.000	0.000	0.000	1.50	90	0.00	A234/WPBWPB/	0.00	0.00	0.00	1085	600	334	0	495.300	0.000	0.13000	0.00000	0.00000
RHD02.2A-05P	51	6.625	0	0.432	0.432	0.000	0.000	0.000	0.00	135	34.00	A106/BB/	0.00	0.00	0.00	1085	600	334	0	495.300	0.000	0.13000	0.00000	0.00000
Line Name : RHD-01.1B_1 RH 31B to TK 31B																								
RHD01.1B-01N	31	6.625	0	0.432	0.432	0.000	0.000	0.000	0.00	90	0.00	A106/BB/	0.00	0.00	0.00	1085	600	630	0	495.300	0.000	0.13000	0.00000	0.00000
RHD01.1B-02P	61	6.625	0	0.432	0.432	0.000	0.000	0.000	0.00	165	11.00	A106/BB/	0.00	0.00	0.00	1085	600	630	0	495.300	0.000	0.13000	0.00000	0.00000
RHD01.1B-03N	30	6.625	0	0.432	0.432	0.000	0.000	0.000	0.00	90	0.00	A106/BB/	0.00	0.00	0.00	1085	600	630	0	495.300	0.000	0.13000	0.00000	0.00000
Line Name : RHD-01.1B_2 TK 31B to B HDR																								
RHD01.1B-04N	31	6.625	0	0.432	0.432	0.000	0.000	0.000	0.00	90	0.00	A106/BB/	0.00	0.00	0.00	1085	600	630	0	495.300	0.000	0.13000	0.00000	0.00000
RHD01.1B-05P	61	6.625	0	0.432	0.432	0.000	0.000	0.000	0.00	180	68.00	A106/BB/	0.00	0.00	0.00	1085	600	630	0	495.300	0.000	0.13000	0.00000	0.00000
RHD01.1B-06E	2	6.625	0	0.432	0.432	0.000	0.000	0.000	1.50	90	0.00	A234/WPBWPB/	0.00	0.00	0.00	1085	600	630	0	495.300	0.000	0.13000	0.00000	0.00000
RHD01.1B-07P	52	6.625	0	0.432	0.432	0.000	0.000	0.000	0.00	90	54.00	A106/BB/	0.00	0.00	0.00	1085	600	630	0	495.300	0.000	0.13000	0.00000	0.00000
RHD01.1B-08E	2	6.625	0	0.432	0.432	0.000	0.000	0.000	1.50	90	0.00	A234/WPBWPB/	0.00	0.00	0.00	1085	600	630	0	495.300	0.000	0.13000	0.00000	0.00000
RHD01.1B-09P	52	6.625	0	0.432	0.432	0.000	0.000	0.000	0.00	135	18.00	A106/BB/	0.00	0.00	0.00	1085	600	630	0	495.300	0.000	0.13000	0.00000	0.00000
RHD01.1B-10E	1	6.625	0	0.432	0.432	0.000	0.000	0.000	1.50	90	0.00	A234/WPBWPB/	0.00	0.00	0.00	1085	600	630	0	495.300	0.000	0.13000	0.00000	0.00000
RHD01.1B-11P	51	6.625	0	0.432	0.432	0.000	0.000	0.000	0.00	180	55.00	A106/BB/	0.00	0.00	0.00	1085	600	630	0	495.300	0.000	0.13000	0.00000	0.00000
RHD01.1B-12E	2	6.625	0	0.432	0.432	0.000	0.000	0.000	1.50	90	0.00	A234/WPBWPB/	0.00	0.00	0.00	1085	600	630	0	495.300	0.000	0.13000	0.00000	0.00000
RHD01.1B-13P	52	6.625	0	0.432	0.432	0.000	0.000	0.000	0.00	90	102.00	A106/BB/	0.00	0.00	0.00	1085	600	630	0	495.300	0.000	0.13000	0.00000	0.00000
RHD01.1B-14F	6	6.625	0	0.432	0.432	0.000	0.000	0.000	0.00	90	0.00	A106/BB/	0.00	0.00	0.00	1085	600	630	0	495.300	0.000	0.13000	0.00000	0.00000
RHD01.1B-15P	56	6.625	0	0.432	0.432	0.000	0.000	0.000	0.00	90	27.00	A106/BB/	0.00	0.00	0.00	1085	600	630	0	495.300	0.000	0.13000	0.00000	0.00000
RHD01.1B-16E	2	6.625	0	0.432	0.432	0.000	0.000	0.000	1.50	90	0.00	A234/WPBWPB/	0.00	0.00	0.00	1085	600	630	0	495.300	0.000	0.13000	0.00000	0.00000
RHD01.1B-17P	52	6.625	0	0.432	0.432	0.000	0.000	0.000	0.00	180	30.00	A106/BB/	0.00	0.00	0.00	1085	600	630	0	495.300	0.000	0.13000	0.00000	0.00000
RHD01.1B-18E	2	6.625	0	0.432	0.432	0.000	0.000	0.000	1.50	90	0.00	A234/WPBWPB/	0.00	0.00	0.00	1085	600	630	0	495.300	0.000	0.13000	0.00000	0.00000
RHD01.1B-19P	52	6.625	0	0.432	0.432	0.000	0.000	0.000	0.00	90	13.00	A106/BB/	0.00	0.00	0.00	1085	600	630	0	495.300	0.000	0.13000	0.00000	0.00000
RHD01.1B-20E	1	6.625	0	0.432	0.432	0.000	0.000	0.000	1.50	90	0.00	A234/WPBWPB/	0.00	0.00	0.00	1085	600	630	0	495.300	0.000	0.13000	0.00000	0.00000
RHD01.1B-21P_1	51	6.625	0	0.432	0.432	0.000	0.000	0.000	0.00	90	99.38	A106/BB/	0.00	0.00	0.00	1085	600	630	0	495.300	0.000	0.13000	0.00000	0.00000
RHD01.1B-21P_2	9	6.625	0	0.432	0.432	0.000	0.000	0.000	0.00	90	388.63	A106/BB/	0.00	0.00	0.00	1085	600	630	0	495.300	0.000	0.13000	0.00000	0.00000
RHD01.1B-22E	2	6.625	0	0.432	0.432	0.000	0.000	0.000	1.50	90	0.00	A234/WPBWPB/	0.00	0.00	0.00	1085	600	630	0	495.300	0.000	0.13000	0.00000	0.00000
RHD01.1B-23P	52	6.625	0	0.432	0.432	0.000	0.000	0.000	0.00	0	57.00	A106/BB/	0.00	0.00	0.00	1085	600	630	0	495.300	0.000	0.13000	0.00000	0.00000
RHD01.1B-24E	2	6.625	0	0.432	0.432	0.000	0.000	0.000	1.50	90	0.00	A234/WPBWPB/	0.00	0.00	0.00	1085	600	630	0	495.300	0.000	0.13000	0.00000	0.00000
RHD01.1B-25P	52	6.625	0	0.432	0.432	0.000	0.000	0.000	0.00	90	23.00	A106/BB/	0.00	0.00	0.00	1085	600	630	0	495.300	0.000	0.13000	0.00000	0.00000
RHD01.1B-26E	2	6.625	0	0.432	0.432	0.000	0.000	0.000	1.50	90	0.00	A234/WPBWPB/	0.00	0.00	0.00	1085	600	630	0	495.300	0.000	0.13000	0.00000	0.00000
RHD01.1B-27P_1	52	6.625	0	0.432	0.432	0.000	0.000	0.000	0.00	90	99.38	A106/BB/	0.00	0.00	0.00	1085	600	630	0	495.300	0.000	0.13000	0.00000	0.00000

Component Name	Geom Code	Pipe Size OD (in)	Sch.	Tnom (in)	Tinit (in)	Tcrit (in)	Br/Small End OD (in)	Br/Small Tnom (in)	R / D Ratio	Orient Angle (Deg.)	Pipe Length (in)	Spec/Type/ Class	Material Cr. (%)	Cu. (%)	Mo. (%)	Design Press. (psig)	Design Temp. (Deg. F)	Op. Press. (psig)	Op. Temp. (Deg. F)	Op. Enth. (Btu/lbm)	Op. Qual.	Flow Rate U/S Mn.	D/S Mn. (Mlbm/hr)	Br.
RHD01.1B-27P_2	9	6.625	0	0.432	0.432	0.000	0.000	0.000	0.00	90	137.63	A106/BB/	0.00	0.00	0.00	1085	600	630	0	495.300	0.000	0.13000	0.00000	0.00000
RHD01.1B-28E	2	6.625	0	0.432	0.432	0.000	0.000	0.000	1.50	90	0.00	A234/WPBWPB/	0.00	0.00	0.00	1085	600	630	0	495.300	0.000	0.13000	0.00000	0.00000
RHD01.1B-29P	52	6.625	80	0.432	0.473	0.000	0.000	0.000	0.00	0	6.00	A106/BB/	0.00	0.00	0.00	1085	600	630	0	495.300	0.000	0.13000	0.00000	0.00000
RHD01.1B-30E	4	6.625	80	0.432	0.473	0.000	0.000	0.000	1.50	90	0.00	A234/WPBWPB/	0.00	0.00	0.00	1085	600	630	0	495.300	0.000	0.13000	0.00000	0.00000
RHD01.1B-31P	54	6.625	80	0.432	0.469	0.000	0.000	0.000	0.00	90	72.00	A106/BB/	0.00	0.00	0.00	1085	600	630	0	495.300	0.000	0.13000	0.00000	0.00000
RHD01.1B-32E	2	6.625	0	0.432	0.432	0.000	0.000	0.000	1.50	90	0.00	A234/WPBWPB/	0.00	0.00	0.00	1085	600	630	0	495.300	0.000	0.13000	0.00000	0.00000
RHD01.1B-33P	52	6.625	0	0.432	0.432	0.000	0.000	0.000	0.00	90	93.00	A106/BB/	0.00	0.00	0.00	1085	600	630	0	495.300	0.000	0.13000	0.00000	0.00000
RHD01.1B-34T	15	6.625	0	0.432	0.432	0.000	6.000	0.432	0.00	90	0.00	A234/WPBWPB/	0.00	0.00	0.00	1085	600	630	0	495.300	0.000	0.13000	0.13000	0.00000
RHD01.1B-35E	4	6.625	0	0.432	0.432	0.000	0.000	0.000	1.50	90	0.00	A234/WPBWPB/	0.00	0.00	0.00	1085	600	630	0	495.300	0.000	0.13000	0.00000	0.00000
RHD01.1B-36P	54	6.625	0	0.432	0.432	0.000	0.000	0.000	0.00	45	30.00	A106/BB/	0.00	0.00	0.00	1085	600	630	0	495.300	0.000	0.13000	0.00000	0.00000
RHD01.1B-37E	2	6.625	0	0.432	0.432	0.000	0.000	0.000	1.50	90	0.00	A234/WPBWPB/	0.00	0.00	0.00	1085	600	630	0	495.300	0.000	0.13000	0.00000	0.00000
RHD01.1B-38P_1	52	6.625	0	0.432	0.432	0.000	0.000	0.000	0.00	90	99.38	A106/BB/	0.00	0.00	0.00	1085	600	630	0	495.300	0.000	0.13000	0.00000	0.00000
RHD01.1B-38P_2	9	6.625	0	0.432	0.432	0.000	0.000	0.000	0.00	90	887.63	A106/BB/	0.00	0.00	0.00	1085	600	630	0	495.300	0.000	0.13000	0.00000	0.00000
RHD01.1B-39E	2	6.625	0	0.432	0.432	0.000	0.000	0.000	1.50	90	0.00	A234/WPBWPB/	0.00	0.00	0.00	1085	600	630	0	495.300	0.000	0.13000	0.00000	0.00000
RHD01.1B-40P	52	6.625	0	0.432	0.432	0.000	0.000	0.000	0.00	180	21.00	A106/BB/	0.00	0.00	0.00	1085	600	630	0	495.300	0.000	0.13000	0.00000	0.00000
RHD01.1B-41E	2	6.625	0	0.432	0.432	0.000	0.000	0.000	1.50	90	0.00	A234/WPBWPB/	0.00	0.00	0.00	1085	600	630	0	495.300	0.000	0.13000	0.00000	0.00000
RHD01.1B-42P_1	52	6.625	0	0.432	0.432	0.000	0.000	0.000	0.00	90	99.38	A106/BB/	0.00	0.00	0.00	1085	600	630	0	495.300	0.000	0.13000	0.00000	0.00000
RHD01.1B-42P_2	9	6.625	0	0.432	0.432	0.000	0.000	0.000	0.00	90	27.63	A106/BB/	0.00	0.00	0.00	1085	600	630	0	495.300	0.000	0.13000	0.00000	0.00000
RHD01.1B-43E	2	6.625	0	0.432	0.432	0.000	0.000	0.000	1.50	90	0.00	A234/WPBWPB/	0.00	0.00	0.00	1085	600	630	0	495.300	0.000	0.13000	0.00000	0.00000
RHD01.1B-44P	52	6.625	0	0.432	0.432	0.000	0.000	0.000	0.00	90	74.00	A106/BB/	0.00	0.00	0.00	1085	600	630	0	495.300	0.000	0.13000	0.00000	0.00000
RHD01.1B-45E	2	6.625	0	0.432	0.432	0.000	0.000	0.000	1.50	90	0.00	A234/WPBWPB/	0.00	0.00	0.00	1085	600	630	0	495.300	0.000	0.13000	0.00000	0.00000
RHD01.1B-46P	52	6.625	0	0.432	0.432	0.000	0.000	0.000	0.00	135	8.00	A106/BB/	0.00	0.00	0.00	1085	600	630	0	495.300	0.000	0.13000	0.00000	0.00000
RHD01.1B-47E	1	6.625	0	0.432	0.432	0.000	0.000	0.000	1.50	90	0.00	A234/WPBWPB/	0.00	0.00	0.00	1085	600	630	0	495.300	0.000	0.13000	0.00000	0.00000
RHD01.1B-48P	51	6.625	0	0.432	0.432	0.000	0.000	0.000	0.00	180	41.00	A106/BB/	0.00	0.00	0.00	1085	600	630	0	495.300	0.000	0.13000	0.00000	0.00000
RHD01.1B-49E	2	6.625	0	0.432	0.432	0.000	0.000	0.000	1.50	90	0.00	A234/WPBWPB/	0.00	0.00	0.00	1085	600	630	0	495.300	0.000	0.13000	0.00000	0.00000
RHD01.1B-50P	52	6.625	0	0.432	0.432	0.000	0.000	0.000	0.00	90	17.00	A106/BB/	0.00	0.00	0.00	1085	600	630	0	495.300	0.000	0.13000	0.00000	0.00000
RHD01.1B-51E	2	6.625	0	0.432	0.432	0.000	0.000	0.000	1.50	90	0.00	A234/WPBWPB/	0.00	0.00	0.00	1085	600	630	0	495.300	0.000	0.13000	0.00000	0.00000
RHD01.1B-52P	52	6.625	80	0.432	0.476	0.000	0.000	0.000	0.00	90	12.00	A106/BB/	0.00	0.00	0.00	1085	600	630	0	495.300	0.000	0.13000	0.00000	0.00000
RHD01.2B-01R	17	6.625	80	0.432	0.000	0.000	4.500	0.337	0.00	90	0.00	A234/WPBWPB/	0.00	0.00	0.00	1085	600	630	0	495.300	0.000	0.13000	0.13000	0.00000
RHD02.1B-01V	24	4.500	0	0.337	0.337	0.000	0.000	0.000	0.00	90	0.00	A-217/C5/	5.00	0.00	0.50	1085	600	334	0	495.300	0.000	0.13000	0.00000	0.00000
RHD02.1B-02R	18	6.625	80	0.432	0.000	0.000	4.500	0.337	0.00	90	0.00	A234/WPBWPB/	0.00	0.00	0.00	1085	600	334	0	495.300	0.000	0.13000	0.13000	0.00000
RHD02.2B-01P	68	6.625	0	0.432	0.432	0.000	0.000	0.000	0.00	90	24.00	A106/BB/	0.00	0.00	0.00	1085	600	334	0	495.300	0.000	0.13000	0.00000	0.00000
RHD02.2B-02E	2	6.625	0	0.432	0.432	0.000	0.000	0.000	1.50	90	0.00	A234/WPBWPB/	0.00	0.00	0.00	1085	600	334	0	495.300	0.000	0.13000	0.00000	0.00000
RHD02.2B-03P	52	6.625	0	0.432	0.432	0.000	0.000	0.000	0.00	90	27.00	A106/BB/	0.00	0.00	0.00	1085	600	334	0	495.300	0.000	0.13000	0.00000	0.00000
RHD02.2B-04E	1	6.625	0	0.432	0.432	0.000	0.000	0.000	1.50	90	0.00	A234/WPBWPB/	0.00	0.00	0.00	1085	600	334	0	495.300	0.000	0.13000	0.00000	0.00000
RHD02.2B-05P	51	6.625	0	0.432	0.432	0.000	0.000	0.000	0.00	90	52.00	A106/BB/	0.00	0.00	0.00	1085	600	334	0	495.300	0.000	0.13000	0.00000	0.00000
Line Name : RHD-01.3A_1 RH 32A to TK 32A																								
RHD01.3A-01N	31	6.625	0	0.432	0.432	0.000	0.000	0.000	0.00	90	0.00	A106/BB/	0.00	0.00	0.00	1085	600	630	0	495.300	0.000	0.13000	0.00000	0.00000
RHD01.3A-02P	61	6.625	0	0.432	0.432	0.000	0.000	0.000	0.00	165	11.00	A106/BB/	0.00	0.00	0.00	1085	600	630	0	495.300	0.000	0.13000	0.00000	0.00000
RHD01.3A-03N	30	6.625	0	0.432	0.432	0.000	0.000	0.000	0.00	90	0.00	A106/BB/	0.00	0.00	0.00	1085	600	630	0	495.300	0.000	0.13000	0.00000	0.00000
Line Name : RHD-01.3A_2 TK 32A to A HDR																								
RHD01.3A-04N	31	6.625	0	0.432	0.432	0.000	0.000	0.000	0.00	90	0.00	A106/BB/	0.00	0.00	0.00	1085	600	630	0	495.300	0.000	0.13000	0.00000	0.00000
RHD01.3A-05P	61	6.625	0	0.432	0.432	0.000	0.000	0.000	0.00	180	69.00	A106/BB/	0.00	0.00	0.00	1085	600	630	0	495.300	0.000	0.13000	0.00000	0.00000
RHD01.3A-06E	2	6.625	0	0.432	0.432	0.000	0.000	0.000	1.50	90	0.00	A234/WPBWPB/	0.00	0.00	0.00	1085	600	630	0	495.300	0.000	0.13000	0.00000	0.00000
RHD01.3A-07P	52	6.625	0	0.432	0.432	0.000	0.000	0.000	0.00	90	58.00	A106/BB/	0.00	0.00	0.00	1085	600	630	0	495.300	0.000	0.13000	0.00000	0.00000
RHD01.3A-08E	2	6.625	0	0.432	0.432	0.000	0.000	0.000	1.50	90	0.00	A234/WPBWPB/	0.00	0.00	0.00	1085	600	630	0	495.300	0.000	0.13000	0.00000	0.00000
RHD01.3A-09P	52	6.625	0	0.432	0.432	0.000	0.000	0.000	0.00	90	55.00	A106/BB/	0.00	0.00	0.00	1085	600	630	0	495.300	0.000	0.13000	0.00000	0.00000
RHD01.3A-10E	2	6.625	0	0.432	0.432	0.000	0.000	0.000	1.50	90	0.00	A234/WPBWPB/	0.00	0.00	0.00	1085	600	630	0	495.300	0.000	0.13000	0.00000	0.00000
RHD01.3A-11P	52	6.625	0	0.432	0.432	0.000	0.000	0.000	0.00	90	15.00	A106/BB/	0.00	0.00	0.00	1085	600	630	0	495.300	0.000	0.13000	0.00000	0.00000
RHD01.3A-12E	2	6.625	0	0.432	0.432	0.000	0.000	0.000	1.50	90	0.00	A234/WPBWPB/	0.00	0.00	0.00	1085	600	630	0	495.300	0.000	0.13000	0.00000	0.00000
RHD01.3A-13P	52	6.625	0	0.432	0.432	0.000	0.000	0.000	0.00	180	4.00	A106/BB/	0.00	0.00	0.00	1085	600	630	0	495.300	0.000	0.13000	0.00000	0.00000
RHD01.3A-14E	4	6.625	0	0.432	0.432	0.000	0.000	0.000	1.50	90	0.00	A234/WPBWPB/	0.00	0.00	0.00	1085	600	630	0	495.300	0.000	0.13000	0.00000	0.00000
RHD01.3A-15R	18	8.625	80	0.500	0.000	0.000	6.625	0.432	0.00	90	0.00	A234/WPBWPB/	0.00	0.00	0.00	1085	600	630	0	495.300	0.000	0.13000	0.13000	0.00000
RHD01.4A-01P_1	68	8.625	0	0.500	0.500	0.000	0.000	0.000	0.00	90	129.38	A106/BB/	0.00	0.00	0.00	1085	600	630	0	495.300	0.000	0.13000	0.00000	0.00000
RHD01.4A-01P_2	9	8.625	0	0.500	0.500	0.000	0.000	0.000	0.00	90	77.63	A106/BB/	0.00	0.00	0.00	1085	600	630	0	495.300	0.000	0.13000	0.00000	0.00000
RHD01.5A-01R	17	8.625	80	0.500	0.000	0.000	6.625	0.432	0.00	90	0.00	A234/WPBWPB/	0.00	0.00	0.00	1085	600	630	0	495.300	0.000	0.13000	0.13000	0.00000
RHD01.5A-02P	67	6.625	0	0.432	0.432	0.000	0.000	0.000	0.00	90	70.00	A106/BB/	0.00	0.00	0.00	1085	600	630	0	495.300	0.000	0.13000	0.00000	0.00000
RHD01.5A-03F	6	6.625	0	0.432	0.432	0.000	0.000	0.000	0.00	90	0.00	A106/BB/	0.00	0.00	0.00	1085	600	630	0	495.300	0.000	0.13000	0.00000	0.00000
RHD01.5A-04P	56	6.625	0	0.432	0.432	0.000	0.000	0.000	0.00	90	34.00	A106/BB/	0.00	0.00	0.00	1085	600	630	0	495.300	0.000	0.13000	0.00000	0.00000
RHD01.5A-05R	18	8.625	80	0.500	0.000	0.000	6.625	0.432	0.00	90	0.00	A234/WPBWPB/	0.00	0.00	0.00	1085	600	630	0	495.300	0.000	0.13000	0.13000	0.00000
RHD01.6A-01P	68	8.625	0	0.500	0.500	0.000	0.000	0.000	0.00	90	93.00	A106/BB/	0.00	0.00	0.00	1085	600	630	0	495.300	0.000	0.13000	0.00000	0.00000

Component Name	Geom Code	Pipe Size OD (in)	Sch.	Tnom (in)	Tinit (in)	Tcrit (in)	Br/Small End OD (in)	Br/Small Tnom (in)	R / D Ratio	Orient Angle (Deg.)	Pipe Length (in)	Spec/Type/ Class	Material Cr. (%)	Cu. (%)	Mo. (%)	Design Press. (psig)	Design Temp. (Deg. F)	Op. Press. (psig)	Op. Temp. (Deg. F)	Op. Enth. (Btu/lbm)	Op. Qual.	Flow Rate U/S Mn. (Mlbm/hr)	D/S Mn. (Mlbm/hr)	Br.
RHD01.6A-02T	15	8.625	0	0.500	0.500	0.000	8.000	0.500	0.00	90	0.00	A234/WPBWPB/	0.00	0.00	0.00	1085	600	630	0	495.300	0.000	0.13000	0.13000	0.00000
RHD01.6A-03P_1	65	8.625	0	0.500	0.500	0.000	0.000	0.000	0.00	90	129.38	A106/BB/	0.00	0.00	0.00	1085	600	630	0	495.300	0.000	0.13000	0.00000	0.00000
RHD01.6A-03P_2	9	8.625	0	0.500	0.500	0.000	0.000	0.000	0.00	90	49.63	A106/BB/	0.00	0.00	0.00	1085	600	630	0	495.300	0.000	0.13000	0.00000	0.00000
RHD01.6A-04E	2	8.625	0	0.500	0.500	0.000	0.000	0.000	1.50	90	0.00	A234/WPBWPB/	0.00	0.00	0.00	1085	600	630	0	495.300	0.000	0.13000	0.00000	0.00000
RHD01.6A-05P	52	8.625	0	0.500	0.500	0.000	0.000	0.000	0.00	0	8.00	A106/BB/	0.00	0.00	0.00	1085	600	630	0	495.300	0.000	0.13000	0.00000	0.00000
RHD01.6A-06E	4	8.625	0	0.500	0.500	0.000	0.000	0.000	1.50	90	0.00	A234/WPBWPB/	0.00	0.00	0.00	1085	600	630	0	495.300	0.000	0.13000	0.00000	0.00000
RHD01.6A-07P	54	8.625	0	0.500	0.500	0.000	0.000	0.000	0.00	90	95.00	A106/BB/	0.00	0.00	0.00	1085	600	630	0	495.300	0.000	0.13000	0.00000	0.00000
RHD01.6A-08E	2	8.625	0	0.500	0.500	0.000	0.000	0.000	1.50	90	0.00	A234/WPBWPB/	0.00	0.00	0.00	1085	600	630	0	495.300	0.000	0.13000	0.00000	0.00000
RHD01.6A-09P	52	8.625	0	0.500	0.500	0.000	0.000	0.000	0.00	90	36.00	A106/BB/	0.00	0.00	0.00	1085	600	630	0	495.300	0.000	0.13000	0.00000	0.00000
RHD01.6A-10E	2	8.625	0	0.500	0.500	0.000	0.000	0.000	1.50	90	0.00	A234/WPBWPB/	0.00	0.00	0.00	1085	600	630	0	495.300	0.000	0.13000	0.00000	0.00000
RHD01.6A-11P	52	8.625	0	0.500	0.500	0.000	0.000	0.000	0.00	90	95.00	A106/BB/	0.00	0.00	0.00	1085	600	630	0	495.300	0.000	0.13000	0.00000	0.00000
RHD01.6A-12E	2	8.625	0	0.500	0.500	0.000	0.000	0.000	1.50	90	0.00	A234/WPBWPB/	0.00	0.00	0.00	1085	600	630	0	495.300	0.000	0.13000	0.00000	0.00000
RHD01.6A-13P	52	8.625	0	0.500	0.500	0.000	0.000	0.000	0.00	180	9.00	A106/BB/	0.00	0.00	0.00	1085	600	630	0	495.300	0.000	0.13000	0.00000	0.00000
RHD01.6A-14E	2	8.625	0	0.500	0.500	0.000	0.000	0.000	1.50	90	0.00	A234/WPBWPB/	0.00	0.00	0.00	1085	600	630	0	495.300	0.000	0.13000	0.00000	0.00000
RHD01.6A-15P_1	52	8.625	0	0.500	0.500	0.000	0.000	0.000	0.00	90	129.38	A106/BB/	0.00	0.00	0.00	1085	600	630	0	495.300	0.000	0.13000	0.00000	0.00000
RHD01.6A-15P_2	9	8.625	0	0.500	0.500	0.000	0.000	0.000	0.00	90	250.63	A106/BB/	0.00	0.00	0.00	1085	600	630	0	495.300	0.000	0.13000	0.00000	0.00000
RHD01.7A-01R	17	8.625	80	0.500	0.000	0.000	6.625	0.432	0.00	90	0.00	A234/WPBWPB/	0.00	0.00	0.00	1085	600	630	0	495.300	0.000	0.13000	0.13000	0.00000
RHD01.7A-02E	4	6.625	0	0.432	0.432	0.000	0.000	0.000	1.50	90	0.00	A234/WPBWPB/	0.00	0.00	0.00	1085	600	630	0	495.300	0.000	0.13000	0.00000	0.00000
RHD01.7A-03P	54	6.625	0	0.432	0.432	0.000	0.000	0.000	0.00	180	72.00	A106/BB/	0.00	0.00	0.00	1085	600	630	0	495.300	0.000	0.13000	0.00000	0.00000
RHD01.7A-04E	2	6.625	80	0.432	0.458	0.000	0.000	0.000	1.50	90	0.00	A234/WPBWPB/	0.00	0.00	0.00	1085	600	630	0	495.300	0.000	0.13000	0.00000	0.00000
RHD01.8A-01R	7	6.625	80	0.432	0.000	0.000	4.500	0.337	0.00	90	0.00	A234/WPBWPB/	0.00	0.00	0.00	1085	600	630	0	495.300	0.000	0.13000	0.13000	0.00000
RHD01.8A-02P	57	4.500	80	0.337	0.376	0.000	0.000	0.000	0.00	90	0.00	A106/BB/	0.00	0.00	0.00	1085	600	630	0	495.300	0.000	0.13000	0.00000	0.00000
RHD02.3A-01V	24	4.500	0	0.337	0.337	0.000	0.000	0.000	0.00	90	0.00	A-217/C5/	5.00	0.00	0.50	1085	600	334	0	495.300	0.000	0.13000	0.00000	0.00000
RHD02.3A-02R	18	6.625	80	0.432	0.000	0.000	4.500	0.337	0.00	90	0.00	A234/WPBWPB/	0.00	0.00	0.00	1085	600	334	0	495.300	0.000	0.13000	0.13000	0.00000
RHD02.4A-01P	68	6.625	0	0.432	0.432	0.000	0.000	0.000	0.00	90	12.00	A106/BB/	0.00	0.00	0.00	1085	600	334	0	495.300	0.000	0.13000	0.00000	0.00000
RHD02.4A-02E	2	6.625	80	0.432	0.473	0.000	0.000	0.000	1.50	90	0.00	A234/WPBWPB/	0.00	0.00	0.00	1085	600	334	0	495.300	0.000	0.13000	0.00000	0.00000
RHD02.4A-03P	52	6.625	0	0.432	0.432	0.000	0.000	0.000	0.00	180	43.00	A106/BB/	0.00	0.00	0.00	1085	600	334	0	495.300	0.000	0.13000	0.00000	0.00000
RHD02.4A-04E	1	6.625	0	0.432	0.432	0.000	0.000	0.000	1.50	90	0.00	A234/WPBWPB/	0.00	0.00	0.00	1085	600	334	0	495.300	0.000	0.13000	0.00000	0.00000
RHD02.4A-05P	51	6.625	0	0.432	0.432	0.000	0.000	0.000	0.00	135	20.00	A106/BB/	0.00	0.00	0.00	1085	600	334	0	495.300	0.000	0.13000	0.00000	0.00000
RHD02.4A-06L	10	10.750	0	0.594	0.594	0.000	6.000	0.432	0.00	90	0.00	A106/BB/	0.00	0.00	0.00	1085	600	334	0	495.300	0.000	0.00000	0.13000	0.13000
RHD02.7A-01P	60	10.750	0	0.594	0.594	0.000	0.000	0.000	0.00	90	25.00	A106/BB/	0.00	0.00	0.00	1085	600	334	0	495.300	0.000	0.13000	0.00000	0.00000
Line Name : RHD-02.8A TK A HDR to FWH 36																								
RHD02.6A-06L	12	10.750	0	0.594	0.594	0.000	6.000	0.432	0.00	90	0.00	A106/BB/	0.00	0.00	0.00	1085	600	334	0	495.300	0.000	0.13000	0.26000	0.13000
Line Name : RHD-01.3B_1 RH 32B to TK 32B																								
RHD01.3B-01N	31	6.625	0	0.432	0.432	0.000	0.000	0.000	0.00	90	0.00	A106/BB/	0.00	0.00	0.00	1085	600	630	0	495.300	0.000	0.13000	0.00000	0.00000
RHD01.3B-02P	61	6.625	0	0.432	0.432	0.000	0.000	0.000	0.00	165	11.00	A106/BB/	0.00	0.00	0.00	1085	600	630	0	495.300	0.000	0.13000	0.00000	0.00000
RHD01.3B-03N	30	6.625	0	0.432	0.432	0.000	0.000	0.000	0.00	90	0.00	A106/BB/	0.00	0.00	0.00	1085	600	630	0	495.300	0.000	0.13000	0.00000	0.00000
Line Name : RHD-01.3B_2 TK 32B to B HDR																								
RHD01.3B-04N	31	6.625	0	0.432	0.432	0.000	0.000	0.000	0.00	90	0.00	A106/BB/	0.00	0.00	0.00	1085	600	630	0	495.300	0.000	0.13000	0.00000	0.00000
RHD01.3B-05P	61	6.625	0	0.432	0.432	0.000	0.000	0.000	0.00	180	61.00	A106/BB/	0.00	0.00	0.00	1085	600	630	0	495.300	0.000	0.13000	0.00000	0.00000
RHD01.3B-06E	2	6.625	0	0.432	0.432	0.000	0.000	0.000	1.50	90	0.00	A234/WPBWPB/	0.00	0.00	0.00	1085	600	630	0	495.300	0.000	0.13000	0.00000	0.00000
RHD01.3B-07P	52	6.625	0	0.432	0.432	0.000	0.000	0.000	0.00	90	63.00	A106/BB/	0.00	0.00	0.00	1085	600	630	0	495.300	0.000	0.13000	0.00000	0.00000
RHD01.3B-08E	2	6.625	0	0.432	0.432	0.000	0.000	0.000	1.50	90	0.00	A234/WPBWPB/	0.00	0.00	0.00	1085	600	630	0	495.300	0.000	0.13000	0.00000	0.00000
RHD01.3B-09P	52	6.625	0	0.432	0.432	0.000	0.000	0.000	0.00	90	54.00	A106/BB/	0.00	0.00	0.00	1085	600	630	0	495.300	0.000	0.13000	0.00000	0.00000
RHD01.3B-10E	2	6.625	0	0.432	0.432	0.000	0.000	0.000	1.50	90	0.00	A234/WPBWPB/	0.00	0.00	0.00	1085	600	630	0	495.300	0.000	0.13000	0.00000	0.00000
RHD01.3B-11P	52	6.625	0	0.432	0.432	0.000	0.000	0.000	0.00	90	81.00	A106/BB/	0.00	0.00	0.00	1085	600	630	0	495.300	0.000	0.13000	0.00000	0.00000
RHD01.3B-12E	2	6.625	0	0.432	0.432	0.000	0.000	0.000	1.50	90	0.00	A234/WPBWPB/	0.00	0.00	0.00	1085	600	630	0	495.300	0.000	0.13000	0.00000	0.00000
RHD01.3B-13P	52	6.625	0	0.432	0.432	0.000	0.000	0.000	0.00	90	54.00	A106/BB/	0.00	0.00	0.00	1085	600	630	0	495.300	0.000	0.13000	0.00000	0.00000
RHD01.3B-14E	2	6.625	0	0.432	0.432	0.000	0.000	0.000	1.50	90	0.00	A234/WPBWPB/	0.00	0.00	0.00	1085	600	630	0	495.300	0.000	0.13000	0.00000	0.00000
RHD01.3B-15P	52	6.625	0	0.432	0.432	0.000	0.000	0.000	0.00	90	53.00	A106/BB/	0.00	0.00	0.00	1085	600	630	0	495.300	0.000	0.13000	0.00000	0.00000
RHD01.3B-16E	2	6.625	0	0.432	0.432	0.000	0.000	0.000	1.50	90	0.00	A234/WPBWPB/	0.00	0.00	0.00	1085	600	630	0	495.300	0.000	0.13000	0.00000	0.00000
RHD01.3B-17P	52	6.625	0	0.432	0.432	0.000	0.000	0.000	0.00	115	17.00	A106/BB/	0.00	0.00	0.00	1085	600	630	0	495.300	0.000	0.13000	0.00000	0.00000
RHD01.3B-18E	2	6.625	0	0.432	0.432	0.000	0.000	0.000	1.50	90	0.00	A234/WPBWPB/	0.00	0.00	0.00	1085	600	630	0	495.300	0.000	0.13000	0.00000	0.00000
RHD01.3B-19P	52	6.625	0	0.432	0.432	0.000	0.000	0.000	0.00	90	9.00	A106/BB/	0.00	0.00	0.00	1085	600	630	0	495.300	0.000	0.13000	0.00000	0.00000
RHD01.3B-20R	18	10.750	80	0.594	0.000	0.000	6.625	0.432	0.00	90	0.00	A234/WPBWPB/	0.00	0.00	0.00	1085	600	630	0	495.300	0.000	0.13000	0.13000	0.00000
RHD01.4B-01P_1	68	10.750	0	0.594	0.594	0.000	0.000	0.000	0.00	90	161.25	A106/BB/	0.00	0.00	0.00	1085	600	630	0	495.300	0.000	0.13000	0.00000	0.00000
RHD01.4B-01P_2	9	10.750	0	0.594	0.594	0.000	0.000	0.000	0.00	90	71.75	A106/BB/	0.00	0.00	0.00	1085	600	630	0	495.300	0.000	0.13000	0.00000	0.00000

Component Name	Geom Code	Pipe Size OD (in)	Sch.	Tnom (in)	Tinit (in)	Tcrit (in)	Br/Small End OD (in)	Br/Small Tnom (in)	R / D Ratio	Orient Angle (Deg.)	Pipe Length (in)	Spec/Type/ Class	Material Cr. (%)	Cu. (%)	Mo. (%)	Design Press. (psig)	Design Temp. (Deg. F)	Op. Press. (psig)	Op. Temp. (Deg. F)	Op. Enth. (Btu/lbm)	Op. Qual.	Flow Rate U/S Mn. (Mlbm/hr)	D/S Mn. (Mlbm/hr)	Br.
RHD01.5B-01R	17	10.750	80	0.594	0.000	0.000	6.625	0.432	0.00	90	0.00	A234/WPBWPB/	0.00	0.00	0.00	1085	600	630	0	495.300	0.000	0.13000	0.13000	0.00000
RHD01.5B-02P	67	6.625	80	0.432	0.458	0.000	0.000	0.000	0.00	90	69.00	A106/BB/	0.00	0.00	0.00	1085	600	630	0	495.300	0.000	0.13000	0.00000	0.00000
RHD01.5B-03F	6	6.625	0	0.432	0.432	0.000	0.000	0.000	0.00	90	0.00	A106/BB/	0.00	0.00	0.00	1085	600	630	0	495.300	0.000	0.13000	0.00000	0.00000
RHD01.5B-04P	56	6.625	80	0.432	0.475	0.000	0.000	0.000	0.00	90	52.00	A106/BB/	0.00	0.00	0.00	1085	600	630	0	495.300	0.000	0.13000	0.00000	0.00000
RHD01.5B-05R	18	10.750	80	0.594	0.000	0.000	6.625	0.432	0.00	90	0.00	A234/WPBWPB/	0.00	0.00	0.00	1085	600	630	0	495.300	0.000	0.13000	0.13000	0.00000
RHD01.6B-01P	68	10.750	80	0.594	0.634	0.000	0.000	0.000	0.00	90	29.00	A106/BB/	0.00	0.00	0.00	1085	600	630	0	495.300	0.000	0.13000	0.00000	0.00000
RHD01.6B-02E	2	10.750	0	0.594	0.594	0.000	0.000	0.000	1.50	90	0.00	A234/WPBWPB/	0.00	0.00	0.00	1085	600	630	0	495.300	0.000	0.13000	0.00000	0.00000
RHD01.6B-03P_1	52	10.750	0	0.594	0.594	0.000	0.000	0.000	0.00	90	161.25	A106/BB/	0.00	0.00	0.00	1085	600	630	0	495.300	0.000	0.13000	0.00000	0.00000
RHD01.6B-03P_2	9	10.750	0	0.594	0.594	0.000	0.000	0.000	0.00	90	25.75	A106/BB/	0.00	0.00	0.00	1085	600	630	0	495.300	0.000	0.13000	0.00000	0.00000
RHD01.6B-04E	1	10.750	0	0.594	0.594	0.000	0.000	0.000	1.50	90	0.00	A234/WPBWPB/	0.00	0.00	0.00	1085	600	630	0	495.300	0.000	0.13000	0.00000	0.00000
RHD01.6B-05P	51	10.750	0	0.594	0.594	0.000	0.000	0.000	0.00	90	13.00	A106/BB/	0.00	0.00	0.00	1085	600	630	0	495.300	0.000	0.13000	0.00000	0.00000
RHD01.6B-06E	2	10.750	0	0.594	0.594	0.000	0.000	0.000	1.50	90	0.00	A234/WPBWPB/	0.00	0.00	0.00	1085	600	630	0	495.300	0.000	0.13000	0.00000	0.00000
RHD01.6B-07P	52	10.750	0	0.594	0.594	0.000	0.000	0.000	0.00	180	64.00	A106/BB/	0.00	0.00	0.00	1085	600	630	0	495.300	0.000	0.13000	0.00000	0.00000
RHD01.6B-08E	2	10.750	0	0.594	0.594	0.000	0.000	0.000	1.50	90	0.00	A234/WPBWPB/	0.00	0.00	0.00	1085	600	630	0	495.300	0.000	0.13000	0.00000	0.00000
RHD01.6B-09P_1	52	10.750	0	0.594	0.594	0.000	0.000	0.000	0.00	90	161.25	A106/BB/	0.00	0.00	0.00	1085	600	630	0	495.300	0.000	0.13000	0.00000	0.00000
RHD01.6B-09P_2	9	10.750	0	0.594	0.594	0.000	0.000	0.000	0.00	90	270.75	A106/BB/	0.00	0.00	0.00	1085	600	630	0	495.300	0.000	0.13000	0.00000	0.00000
RHD01.6B-10E	2	10.750	0	0.594	0.594	0.000	0.000	0.000	1.50	90	0.00	A234/WPBWPB/	0.00	0.00	0.00	1085	600	630	0	495.300	0.000	0.13000	0.00000	0.00000
RHD01.6B-11E	4	10.750	0	0.594	0.594	0.000	0.000	0.000	1.00	90	0.00	A234/WPBWPB/	0.00	0.00	0.00	1085	600	630	0	495.300	0.000	0.13000	0.00000	0.00000
RHD01.6B-12P	54	10.750	0	0.594	0.594	0.000	0.000	0.000	0.00	90	18.00	A106/BB/	0.00	0.00	0.00	1085	600	630	0	495.300	0.000	0.13000	0.00000	0.00000
RHD01.6B-13E	2	10.750	0	0.594	0.594	0.000	0.000	0.000	1.50	90	0.00	A234/WPBWPB/	0.00	0.00	0.00	1085	600	630	0	495.300	0.000	0.13000	0.00000	0.00000
RHD01.6B-14P	52	10.750	0	0.594	0.594	0.000	0.000	0.000	0.00	0	38.00	A106/BB/	0.00	0.00	0.00	1085	600	630	0	495.300	0.000	0.13000	0.00000	0.00000
RHD01.6B-15E	2	10.750	0	0.594	0.594	0.000	0.000	0.000	1.50	90	0.00	A234/WPBWPB/	0.00	0.00	0.00	1085	600	630	0	495.300	0.000	0.13000	0.00000	0.00000
RHD01.6B-16P	52	10.750	0	0.594	0.594	0.000	0.000	0.000	0.00	90	130.00	A106/BB/	0.00	0.00	0.00	1085	600	630	0	495.300	0.000	0.13000	0.00000	0.00000
RHD01.6B-17T	15	10.750	0	0.594	0.594	0.000	8.000	0.500	0.00	90	0.00	A106/BB/	0.00	0.00	0.00	1085	600	630	0	495.300	0.000	0.13000	0.13000	0.00000
RHD01.6B-18P	65	10.750	0	0.594	0.594	0.000	0.000	0.000	0.00	90	130.00	A106/BB/	0.00	0.00	0.00	1085	600	630	0	495.300	0.000	0.13000	0.00000	0.00000
RHD01.6B-19E	2	10.750	0	0.594	0.594	0.000	0.000	0.000	1.50	90	0.00	A234/WPBWPB/	0.00	0.00	0.00	1085	600	630	0	495.300	0.000	0.13000	0.00000	0.00000
RHD01.6B-20P_1	52	10.750	0	0.594	0.594	0.000	0.000	0.000	0.00	90	161.25	A106/BB/	0.00	0.00	0.00	1085	600	630	0	495.300	0.000	0.13000	0.00000	0.00000
RHD01.6B-20P_2	9	10.750	0	0.594	0.594	0.000	0.000	0.000	0.00	90	228.75	A106/BB/	0.00	0.00	0.00	1085	600	630	0	495.300	0.000	0.13000	0.00000	0.00000
RHD01.6B-21T	15	10.750	0	0.594	0.594	0.000	8.000	0.500	0.00	90	0.00	A106/BB/	0.00	0.00	0.00	1085	600	630	0	495.300	0.000	0.13000	0.13000	0.00000
RHD01.6B-22P_1	65	10.750	0	0.594	0.594	0.000	0.000	0.000	0.00	90	161.25	A106/BB/	0.00	0.00	0.00	1085	600	630	0	495.300	0.000	0.13000	0.00000	0.00000
RHD01.6B-22P_2	9	10.750	0	0.594	0.594	0.000	0.000	0.000	0.00	90	73.75	A106/BB/	0.00	0.00	0.00	1085	600	630	0	495.300	0.000	0.13000	0.00000	0.00000
RHD01.7B-01R	17	10.750	80	0.594	0.000	0.000	6.625	0.432	0.00	90	0.00	A234/WPBWPB/	0.00	0.00	0.00	1085	600	630	0	495.300	0.000	0.13000	0.13000	0.00000
RHD01.7B-02P	67	6.625	0	0.432	0.432	0.000	0.000	0.000	0.00	90	24.00	A106/BB/	0.00	0.00	0.00	1085	600	630	0	495.300	0.000	0.13000	0.00000	0.00000
RHD01.7B-03R	18	10.750	80	0.594	0.000	0.000	6.625	0.432	0.00	90	0.00	A234/WPBWPB/	0.00	0.00	0.00	1085	600	630	0	495.300	0.000	0.13000	0.13000	0.00000
RHD01.8B-01P_1	68	10.750	0	0.594	0.594	0.000	0.000	0.000	0.00	90	161.25	A106/BB/	0.00	0.00	0.00	1085	600	630	0	495.300	0.000	0.13000	0.00000	0.00000
RHD01.8B-01P_2	9	10.750	0	0.594	0.594	0.000	0.000	0.000	0.00	90	678.75	A106/BB/	0.00	0.00	0.00	1085	600	630	0	495.300	0.000	0.13000	0.00000	0.00000
RHD01.8B-02E	1	10.750	0	0.594	0.594	0.000	0.000	0.000	1.50	90	0.00	A234/WPBWPB/	0.00	0.00	0.00	1085	600	630	0	495.300	0.000	0.13000	0.00000	0.00000
RHD01.8B-03P	51	10.750	0	0.594	0.594	0.000	0.000	0.000	0.00	90	17.00	A106/BB/	0.00	0.00	0.00	1085	600	630	0	495.300	0.000	0.13000	0.00000	0.00000
RHD01.8B-04E	2	10.750	0	0.594	0.594	0.000	0.000	0.000	1.50	90	0.00	A234/WPBWPB/	0.00	0.00	0.00	1085	600	630	0	495.300	0.000	0.13000	0.00000	0.00000
RHD01.8B-05P	52	10.750	0	0.594	0.594	0.000	0.000	0.000	0.00	180	53.00	A106/BB/	0.00	0.00	0.00	1085	600	630	0	495.300	0.000	0.13000	0.00000	0.00000
RHD01.8B-06E	2	10.750	0	0.594	0.594	0.000	0.000	0.000	1.50	90	0.00	A234/WPBWPB/	0.00	0.00	0.00	1085	600	630	0	495.300	0.000	0.13000	0.00000	0.00000
RHD01.9B-01R	17	10.750	80	0.594	0.000	0.000	4.500	0.337	0.00	90	0.00	A234/WPBWPB/	0.00	0.00	0.00	1085	600	630	0	495.300	0.000	0.13000	0.13000	0.00000
RHD02.3B-01V	24	4.500	0	0.337	0.337	0.000	0.000	0.000	0.00	90	0.00	A-217/C5/	5.00	0.00	0.50	1085	600	334	0	495.300	0.000	0.13000	0.00000	0.00000
RHD02.3B-02R	18	10.750	80	0.594	0.000	0.000	4.500	0.337	0.00	90	0.00	A234/WPBWPB/	0.00	0.00	0.00	1085	600	334	0	495.300	0.000	0.13000	0.13000	0.00000
RHD02.4B-01P	68	10.750	0	0.594	0.594	0.000	0.000	0.000	0.00	90	16.00	A106/BB/	0.00	0.00	0.00	1085	600	334	0	495.300	0.000	0.13000	0.00000	0.00000
RHD02.4B-02E	2	10.750	80	0.594	0.000	0.000	0.000	0.000	1.50	90	0.00	A234/WPBWPB/	0.00	0.00	0.00	1085	600	334	0	495.300	0.000	0.13000	0.00000	0.00000
RHD02.4B-03P	52	10.750	0	0.594	0.594	0.000	0.000	0.000	0.00	180	72.00	A106/BB/	0.00	0.00	0.00	1085	600	334	0	495.300	0.000	0.13000	0.00000	0.00000
RHD02.4B-04E	1	10.750	0	0.594	0.594	0.000	0.000	0.000	1.50	90	0.00	A234/WPBWPB/	0.00	0.00	0.00	1085	600	334	0	495.300	0.000	0.13000	0.00000	0.00000
RHD02.4B-05P	51	10.750	0	0.594	0.594	0.000	0.000	0.000	0.00	135	39.00	A106/BB/	0.00	0.00	0.00	1085	600	334	0	495.300	0.000	0.13000	0.00000	0.00000
RHD02.4B-06E	1	10.750	0	0.594	0.594	0.000	0.000	0.000	1.50	90	0.00	A234/WPBWPB/	0.00	0.00	0.00	1085	600	334	0	495.300	0.000	0.13000	0.00000	0.00000
RHD02.4B-07P	51	10.750	80	0.594	0.609	0.000	0.000	0.000	0.00	90	12.00	A106/BB/	0.00	0.00	0.00	1085	600	334	0	495.300	0.000	0.13000	0.00000	0.00000
Line Name : RHD-02.8B TK B HDR to FWH 36																								
RHD02.7B-08L	12	10.750	80	0.594	0.605	0.000	8.000	0.500	0.00	90	0.00	A106/BB/	0.00	0.00	0.00	1085	600	334	0	495.300	0.000	0.13000	0.39000	0.26000
Line Name : RHD-02.10A TK A HDR to FWH 36																								
RHD02.10A-01R	7	10.750	80	0.594	0.000	0.000	8.625	0.500	0.00	90	0.00	A234/WPBWPB/	0.00	0.00	0.00	1085	600	334	0	495.300	0.000	0.26000	0.26000	0.00000
RHD02.10A-02P	57	8.625	0	0.500	0.500	0.000	0.000	0.000	0.00	90	75.00	A106/BB/	0.00	0.00	0.00	1085	600	334	0	495.300	0.000	0.26000	0.00000	0.00000
RHD02.10A-03E	1	8.625	0	0.500	0.500	0.000	0.000	0.000	1.50	90	0.00	A234/WPBWPB/	0.00	0.00	0.00	1085	600	334	0	495.300	0.000	0.26000	0.00000	0.00000
RHD02.10A-04P	51	8.625	0	0.500	0.500	0.000	0.000	0.000	0.00	135	34.00	A106/BB/	0.00	0.00	0.00	1085	600	334	0	495.300	0.000	0.26000	0.00000	0.00000

Component Name	Geom Code	Pipe Size OD (in)	Sch.	Tnom (in)	Tinit (in)	Tcrit (in)	Br/Small End OD (in)	Br/Small Tnom (in)	R / D Ratio	Orient Angle (Deg.)	Pipe Length (in)	Spec/Type/ Class	Material Cr. (%)	Cu. (%)	Mo. (%)	Design Press. (psig)	Design Temp. (Deg. F)	Op. Press. (psig)	Op. Temp. (Deg. F)	Op. Enth. (Btu/lbm)	Op. Qual.	Flow Rate U/S Mn. (Mlbm/hr)	D/S Mn. (Mlbm/hr)	Br.
RHD02.10A-05E	1	8.625	0	0.500	0.500	0.000	0.000	0.000	1.50	90	0.00	A234/WPBWPB/	0.00	0.00	0.00	1085	600	334	0	495.300	0.000	0.26000	0.00000	0.00000
RHD02.10A-06P	51	8.625	0	0.500	0.500	0.000	0.000	0.000	0.00	90	25.00	A106/BB/	0.00	0.00	0.00	1085	600	334	0	495.300	0.000	0.26000	0.00000	0.00000
RHD02.10A-07E	1	8.625	0	0.500	0.500	0.000	0.000	0.000	1.50	90	0.00	A234/WPBWPB/	0.00	0.00	0.00	1085	600	334	0	495.300	0.000	0.26000	0.00000	0.00000
RHD02.10A-08P	51	8.625	0	0.500	0.500	0.000	0.000	0.000	0.00	90	37.00	A106/BB/	0.00	0.00	0.00	1085	600	334	0	495.300	0.000	0.26000	0.00000	0.00000
RHD02.10A-09E	1	8.625	0	0.500	0.500	0.000	0.000	0.000	1.50	90	0.00	A234/WPBWPB/	0.00	0.00	0.00	1085	600	334	0	495.300	0.000	0.26000	0.00000	0.00000
RHD02.10A-10P	51	8.625	0	0.500	0.500	0.000	0.000	0.000	0.00	90	72.00	A106/BB/	0.00	0.00	0.00	1085	600	334	0	495.300	0.000	0.26000	0.00000	0.00000
RHD02.10A-11T	14	8.625	0	0.500	0.500	0.000	6.000	0.432	0.00	90	0.00	A106/BB/	0.00	0.00	0.00	1085	600	334	0	495.300	0.000	0.26000	0.13000	0.13000
Line Name : RHD-02.10B B HDR to FWH 36A																								
RHD02.10B-01R	7	10.750	80	0.594	0.000	0.000	6.625	0.432	0.00	90	0.00	A234/WPBWPB/	0.00	0.00	0.00	1085	600	334	0	495.300	0.000	0.13000	0.13000	0.00000
RHD02.10B-02P_1	57	6.625	0	0.432	0.432	0.000	0.000	0.000	0.00	90	99.38	A106/BB/	0.00	0.00	0.00	1085	600	334	0	495.300	0.000	0.13000	0.00000	0.00000
RHD02.10B-02P_2	9	6.625	0	0.432	0.432	0.000	0.000	0.000	0.00	90	71.63	A106/BB/	0.00	0.00	0.00	1085	600	334	0	495.300	0.000	0.13000	0.00000	0.00000
RHD02.10B-03E	2	6.625	0	0.432	0.432	0.000	0.000	0.000	1.50	90	0.00	A234/WPBWPB/	0.00	0.00	0.00	1085	600	334	0	495.300	0.000	0.13000	0.00000	0.00000
RHD02.10B-04P	52	6.625	0	0.432	0.432	0.000	0.000	0.000	0.00	0	3.00	A106/BB/	0.00	0.00	0.00	1085	600	334	0	495.300	0.000	0.13000	0.00000	0.00000
RHD02.10B-05E	4	6.625	0	0.432	0.432	0.000	0.000	0.000	1.50	90	0.00	A234/WPBWPB/	0.00	0.00	0.00	1085	600	334	0	495.300	0.000	0.13000	0.00000	0.00000
RHD02.10B-06P	54	6.625	0	0.432	0.432	0.000	0.000	0.000	0.00	90	90.00	A106/BB/	0.00	0.00	0.00	1085	600	334	0	495.300	0.000	0.13000	0.00000	0.00000
RHD02.10B-07E	2	6.625	0	0.432	0.432	0.000	0.000	0.000	1.50	90	0.00	A234/WPBWPB/	0.00	0.00	0.00	1085	600	334	0	495.300	0.000	0.13000	0.00000	0.00000
RHD02.10B-08P	52	6.625	0	0.432	0.432	0.000	0.000	0.000	0.00	90	14.00	A106/BB/	0.00	0.00	0.00	1085	600	334	0	495.300	0.000	0.13000	0.00000	0.00000
RHD02.10B-09E	2	6.625	0	0.432	0.432	0.000	0.000	0.000	1.50	90	0.00	A234/WPBWPB/	0.00	0.00	0.00	1085	600	334	0	495.300	0.000	0.13000	0.00000	0.00000
RHD02.10B-10P	52	6.625	0	0.432	0.432	0.000	0.000	0.000	0.00	0	60.00	A106/BB/	0.00	0.00	0.00	1085	600	334	0	495.300	0.000	0.13000	0.00000	0.00000
RHD02.10B-11E	2	6.625	0	0.432	0.432	0.000	0.000	0.000	1.50	90	0.00	A234/WPBWPB/	0.00	0.00	0.00	1085	600	334	0	495.300	0.000	0.13000	0.00000	0.00000
RHD02.10B-12V	22	6.625	0	0.432	0.432	0.000	0.000	0.000	0.00	90	0.00	A105/A105A10/	0.00	0.00	0.00	1085	600	334	0	495.300	0.000	0.13000	0.00000	0.00000
RHD02.10B-13P	58	6.625	0	0.432	0.432	0.000	0.000	0.000	0.00	90	35.00	A106/BB/	0.00	0.00	0.00	1085	600	334	0	495.300	0.000	0.13000	0.00000	0.00000
RHD02.10B-14T	13	6.625	0	0.432	0.432	0.000	6.000	0.432	0.00	90	0.00	A234/WPBWPB/	0.00	0.00	0.00	1085	600	334	0	495.300	0.000	0.13000	0.00000	0.13000
RHD02.10B-15P	63	6.625	0	0.432	0.432	0.000	0.000	0.000	0.00	0	30.00	A106/BB/	0.00	0.00	0.00	1085	600	334	0	495.300	0.000	0.13000	0.00000	0.00000
RHD02.10B-16T	13	6.625	0	0.432	0.432	0.000	6.000	0.432	0.00	90	0.00	A234/WPBWPB/	0.00	0.00	0.00	1085	600	334	0	495.300	0.000	0.13000	0.00000	0.13000
RHD02.10B-17R	18	8.625	80	0.500	0.000	0.000	6.625	0.432	0.00	90	0.00	A234/WPBWPB/	0.00	0.00	0.00	1085	600	334	0	495.300	0.000	0.13000	0.13000	0.00000
RHD02.11B-01N	30	8.625	0	0.500	0.500	0.000	0.000	0.000	0.00	90	0.00	A105/A105A10/	0.00	0.00	0.00	1085	600	334	0	495.300	0.000	0.13000	0.00000	0.00000
Line Name : RHD-02.11A A HDR to FWH 36A																								
RHD02.11A-01R	7	8.625	80	0.500	0.000	0.000	6.625	0.432	0.00	90	0.00	A234/WPBWPB/	0.00	0.00	0.00	1085	600	334	0	495.300	0.000	0.13000	0.13000	0.00000
RHD02.11A-02P_1	57	6.625	0	0.432	0.432	0.000	0.000	0.000	0.00	90	99.38	A106/BB/	0.00	0.00	0.00	1085	600	334	0	495.300	0.000	0.13000	0.00000	0.00000
RHD02.11A-02P_2	9	6.625	0	0.432	0.432	0.000	0.000	0.000	0.00	90	10.63	A106/BB/	0.00	0.00	0.00	1085	600	334	0	495.300	0.000	0.13000	0.00000	0.00000
RHD02.11A-03E	2	6.625	0	0.432	0.432	0.000	0.000	0.000	1.50	90	0.00	A234/WPBWPB/	0.00	0.00	0.00	1085	600	334	0	495.300	0.000	0.13000	0.00000	0.00000
RHD02.11A-04P	52	6.625	0	0.432	0.432	0.000	0.000	0.000	0.00	0	3.00	A106/BB/	0.00	0.00	0.00	1085	600	334	0	495.300	0.000	0.13000	0.00000	0.00000
RHD02.11A-05E	4	6.625	0	0.432	0.432	0.000	0.000	0.000	1.50	90	0.00	A234/WPBWPB/	0.00	0.00	0.00	1085	600	334	0	495.300	0.000	0.13000	0.00000	0.00000
RHD02.11A-06P	54	6.625	0	0.432	0.432	0.000	0.000	0.000	0.00	90	74.00	A106/BB/	0.00	0.00	0.00	1085	600	334	0	495.300	0.000	0.13000	0.00000	0.00000
RHD02.11A-07E	2	6.625	0	0.432	0.432	0.000	0.000	0.000	1.00	90	0.00	A234/WPBWPB/	0.00	0.00	0.00	1085	600	334	0	495.300	0.000	0.13000	0.00000	0.00000
RHD02.11A-08E	4	6.625	0	0.432	0.432	0.000	0.000	0.000	1.00	90	0.00	A234/WPBWPB/	0.00	0.00	0.00	1085	600	334	0	495.300	0.000	0.13000	0.00000	0.00000
RHD02.11A-09P_1	54	6.625	0	0.432	0.432	0.000	0.000	0.000	0.00	90	99.38	A106/BB/	0.00	0.00	0.00	1085	600	334	0	495.300	0.000	0.13000	0.00000	0.00000
RHD02.11A-09P_2	9	6.625	0	0.432	0.432	0.000	0.000	0.000	0.00	90	59.63	A106/BB/	0.00	0.00	0.00	1085	600	334	0	495.300	0.000	0.13000	0.00000	0.00000
RHD02.11A-10E	2	6.625	0	0.432	0.432	0.000	0.000	0.000	1.50	90	0.00	A234/WPBWPB/	0.00	0.00	0.00	1085	600	334	0	495.300	0.000	0.13000	0.00000	0.00000
RHD02.11A-11P	52	6.625	0	0.432	0.432	0.000	0.000	0.000	0.00	90	43.00	A106/BB/	0.00	0.00	0.00	1085	600	334	0	495.300	0.000	0.13000	0.00000	0.00000
RHD02.11A-12E	2	6.625	0	0.432	0.432	0.000	0.000	0.000	1.50	90	0.00	A234/WPBWPB/	0.00	0.00	0.00	1085	600	334	0	495.300	0.000	0.13000	0.00000	0.00000
RHD02.11A-13P	52	6.625	0	0.432	0.432	0.000	0.000	0.000	0.00	0	33.00	A106/BB/	0.00	0.00	0.00	1085	600	334	0	495.300	0.000	0.13000	0.00000	0.00000
RHD02.11A-14E	2	6.625	0	0.432	0.432	0.000	0.000	0.000	1.50	90	0.00	A234/WPBWPB/	0.00	0.00	0.00	1085	600	334	0	495.300	0.000	0.13000	0.00000	0.00000
RHD02.11A-15V	22	6.625	0	0.432	0.432	0.000	0.000	0.000	0.00	90	0.00	A105/A105A10/	0.00	0.00	0.00	1085	600	334	0	495.300	0.000	0.13000	0.00000	0.00000
RHD02.11A-16P	58	6.625	80	0.432	0.489	0.000	0.000	0.000	0.00	90	35.00	A106/BB/	0.00	0.00	0.00	1085	600	334	0	495.300	0.000	0.13000	0.00000	0.00000
RHD02.11A-17T	13	6.625	0	0.432	0.432	0.000	6.000	0.432	0.00	90	0.00	A234/WPBWPB/	0.00	0.00	0.00	1085	600	334	0	495.300	0.000	0.13000	0.00000	0.13000
RHD02.11A-18P	63	6.625	80	0.432	0.473	0.000	0.000	0.000	0.00	0	48.00	A106/BB/	0.00	0.00	0.00	1085	600	334	0	495.300	0.000	0.13000	0.00000	0.00000
RHD02.11A-19T	13	6.625	0	0.432	0.432	0.000	6.000	0.432	0.00	90	0.00	A234/WPBWPB/	0.00	0.00	0.00	1085	600	334	0	495.300	0.000	0.13000	0.00000	0.13000
RHD02.11A-20R	18	8.625	80	0.500	0.000	0.000	6.625	0.432	0.00	90	0.00	A234/WPBWPB/	0.00	0.00	0.00	1085	600	334	0	495.300	0.000	0.13000	0.13000	0.00000
RHD02.12A-01N	30	8.625	0	0.500	0.500	0.000	0.000	0.000	0.00	90	0.00	A105/A105A10/	0.00	0.00	0.00	1085	600	334	0	495.300	0.000	0.13000	0.00000	0.00000
Line Name : RHD-02.12B B HDR to FWH 36B																								
RHD02.12B-01P	64	6.625	0	0.432	0.432	0.000	0.000	0.000	0.00	0	3.00	A106/BB/	0.00	0.00	0.00	1085	600	334	0	495.300	0.000	0.13000	0.00000	0.00000
RHD02.12B-02E	4	6.625	0	0.432	0.432	0.000	0.000	0.000	1.50	90	0.00	A234/WPBWPB/	0.00	0.00	0.00	1085	600	334	0	495.300	0.000	0.13000	0.00000	0.00000
RHD02.12B-03P	54	6.625	0	0.432	0.432	0.000	0.000	0.000	0.00	90	90.00	A106/BB/	0.00	0.00	0.00	1085	600	334	0	495.300	0.000	0.13000	0.00000	0.00000
RHD02.12B-04E	2	6.625	0	0.432	0.432	0.000	0.000	0.000	1.50	90	0.00	A234/WPBWPB/	0.00	0.00	0.00	1085	600	334	0	495.300	0.000	0.13000	0.00000	0.00000
RHD02.12B-05P	52	6.625	0	0.432	0.432	0.000	0.000	0.000	0.00	90	14.00	A106/BB/	0.00	0.00	0.00	1085	600	334	0	495.300	0.000	0.13000	0.00000	0.00000
RHD02.12B-06E	2	6.625	0	0.432	0.432	0.000	0.000	0.000	1.50	90	0.00	A234/WPBWPB/	0.00	0.00	0.00	1085	600	334	0	495.300	0.000	0.13000	0.00000	0.00000

Component Name	Geom Code	Pipe Size OD (in)	Sch.	Tnom (in)	Tinit (in)	Tcrit (in)	Br/Small End OD (in)	Br/Small Tnom (in)	R / D Ratio	Orient Angle (Deg.)	Pipe Length (in)	Spec/Type/ Class	Material Cr. (%)	Cu. (%)	Mo. (%)	Design Press. (psig)	Design Temp. (Deg. F)	Op. Press. (psig)	Op. Temp. (Deg. F)	Op. Enth. (Btu/lbm)	Op. Qual.	Flow Rate U/S Mn. (Mlbm/hr)	D/S Mn. (Mlbm/hr)	Br.
RHD02.12B-07P	52	6.625	0	0.432	0.432	0.000	0.000	0.000	0.00	0	60.00	A106/BB/	0.00	0.00	0.00	1085	600	334	0	495.300	0.000	0.13000	0.00000	0.00000
RHD02.12B-08E	2	6.625	0	0.432	0.432	0.000	0.000	0.000	1.50	90	0.00	A234/WPBWPB/	0.00	0.00	0.00	1085	600	334	0	495.300	0.000	0.13000	0.00000	0.00000
RHD02.12B-09V	22	6.625	0	0.432	0.432	0.000	0.000	0.000	0.00	90	0.00	A105/A105A10/	0.00	0.00	0.00	1085	600	334	0	495.300	0.000	0.13000	0.00000	0.00000
RHD02.12B-10P	58	6.625	0	0.432	0.432	0.000	0.000	0.000	0.00	90	35.00	A106/BB/	0.00	0.00	0.00	1085	600	334	0	495.300	0.000	0.13000	0.00000	0.00000
RHD02.12B-11T	13	6.625	0	0.432	0.432	0.000	6.000	0.432	0.00	90	0.00	A234/WPBWPB/	0.00	0.00	0.00	1085	600	334	0	495.300	0.000	0.13000	0.00000	0.13000
RHD02.12B-12P	63	6.625	0	0.432	0.432	0.000	0.000	0.000	0.00	0	30.00	A106/BB/	0.00	0.00	0.00	1085	600	334	0	495.300	0.000	0.13000	0.00000	0.00000
RHD02.12B-13T	13	6.625	0	0.432	0.432	0.000	6.000	0.432	0.00	90	0.00	A234/WPBWPB/	0.00	0.00	0.00	1085	600	334	0	495.300	0.000	0.13000	0.00000	0.13000
RHD02.12B-14R	18	8.625	80	0.500	0.000	0.000	6.625	0.432	0.00	90	0.00	A234/WPBWPB/	0.00	0.00	0.00	1085	600	334	0	495.300	0.000	0.13000	0.13000	0.00000
RHD02.13B-01N	30	8.625	0	0.500	0.500	0.000	0.000	0.000	0.00	90	0.00	A105/A105A10/	0.00	0.00	0.00	1085	600	334	0	495.300	0.000	0.13000	0.00000	0.00000
Line Name : RHD-02.13A A HDR to FWH 36B																								
RHD02.13A-01P	64	6.625	0	0.432	0.432	0.000	0.000	0.000	0.00	0	6.00	A106/BB/	0.00	0.00	0.00	1085	600	334	0	495.300	0.000	0.13000	0.00000	0.00000
RHD02.13A-02E	4	6.625	0	0.432	0.432	0.000	0.000	0.000	1.50	90	0.00	A234/WPBWPB/	0.00	0.00	0.00	1085	600	334	0	495.300	0.000	0.13000	0.00000	0.00000
RHD02.13A-03P	54	6.625	0	0.432	0.432	0.000	0.000	0.000	0.00	90	74.00	A106/BB/	0.00	0.00	0.00	1085	600	334	0	495.300	0.000	0.13000	0.00000	0.00000
RHD02.13A-04E	2	6.625	0	0.432	0.432	0.000	0.000	0.000	1.00	90	0.00	A234/WPBWPB/	0.00	0.00	0.00	1085	600	334	0	495.300	0.000	0.13000	0.00000	0.00000
RHD02.13A-05E	4	6.625	0	0.432	0.432	0.000	0.000	0.000	1.00	90	0.00	A234/WPBWPB/	0.00	0.00	0.00	1085	600	334	0	495.300	0.000	0.13000	0.00000	0.00000
RHD02.13A-06P_1	54	6.625	0	0.432	0.432	0.000	0.000	0.000	0.00	90	99.38	A106/BB/	0.00	0.00	0.00	1085	600	334	0	495.300	0.000	0.13000	0.00000	0.00000
RHD02.13A-06P_2	9	6.625	0	0.432	0.432	0.000	0.000	0.000	0.00	90	56.63	A106/BB/	0.00	0.00	0.00	1085	600	334	0	495.300	0.000	0.13000	0.00000	0.00000
RHD02.13A-07E	2	6.625	0	0.432	0.432	0.000	0.000	0.000	1.50	90	0.00	A234/WPBWPB/	0.00	0.00	0.00	1085	600	334	0	495.300	0.000	0.13000	0.00000	0.00000
RHD02.13A-08P	52	6.625	0	0.432	0.432	0.000	0.000	0.000	0.00	90	43.00	A106/BB/	0.00	0.00	0.00	1085	600	334	0	495.300	0.000	0.13000	0.00000	0.00000
RHD02.13A-09E	2	6.625	0	0.432	0.432	0.000	0.000	0.000	1.50	90	0.00	A234/WPBWPB/	0.00	0.00	0.00	1085	600	334	0	495.300	0.000	0.13000	0.00000	0.00000
RHD02.13A-10P	52	6.625	0	0.432	0.432	0.000	0.000	0.000	0.00	0	33.00	A106/BB/	0.00	0.00	0.00	1085	600	334	0	495.300	0.000	0.13000	0.00000	0.00000
RHD02.13A-11E	2	6.625	0	0.432	0.432	0.000	0.000	0.000	1.50	90	0.00	A234/WPBWPB/	0.00	0.00	0.00	1085	600	334	0	495.300	0.000	0.13000	0.00000	0.00000
RHD02.13A-12V	22	6.625	0	0.432	0.432	0.000	0.000	0.000	0.00	90	0.00	A105/A105A10/	0.00	0.00	0.00	1085	600	334	0	495.300	0.000	0.13000	0.00000	0.00000
RHD02.13A-13P	58	6.625	0	0.432	0.432	0.000	0.000	0.000	0.00	90	35.00	A106/BB/	0.00	0.00	0.00	1085	600	334	0	495.300	0.000	0.13000	0.00000	0.00000
RHD02.13A-14T	13	6.625	0	0.432	0.432	0.000	6.000	0.432	0.00	90	0.00	A234/WPBWPB/	0.00	0.00	0.00	1085	600	334	0	495.300	0.000	0.13000	0.00000	0.13000
RHD02.13A-15P	63	6.625	0	0.432	0.432	0.000	0.000	0.000	0.00	0	48.00	A106/BB/	0.00	0.00	0.00	1085	600	334	0	495.300	0.000	0.13000	0.00000	0.00000
RHD02.13A-16T	13	6.625	0	0.432	0.432	0.000	6.000	0.432	0.00	90	0.00	A234/WPBWPB/	0.00	0.00	0.00	1085	600	334	0	495.300	0.000	0.13000	0.00000	0.13000
RHD02.13A-17R	18	8.625	80	0.500	0.000	0.000	6.625	0.432	0.00	90	0.00	A234/WPBWPB/	0.00	0.00	0.00	1085	600	334	0	495.300	0.000	0.13000	0.13000	0.00000
RHD02.14A-01N	30	8.625	0	0.500	0.500	0.000	0.000	0.000	0.00	90	0.00	A105/A105A10/	0.00	0.00	0.00	1085	600	334	0	495.300	0.000	0.13000	0.00000	0.00000
Line Name : RHD-02.14B B HDR to FWH 36C																								
RHD02.14B-01P	64	6.625	0	0.432	0.432	0.000	0.000	0.000	0.00	0	3.00	A106/BB/	0.00	0.00	0.00	1085	600	334	0	495.300	0.000	0.13000	0.00000	0.00000
RHD02.14B-02E	4	6.625	0	0.432	0.000	0.000	0.000	0.000	1.50	90	0.00	A234/WPBWPB/	0.00	0.00	0.00	1085	600	334	0	495.300	0.000	0.13000	0.00000	0.00000
RHD02.14B-03P	54	6.625	0	0.432	0.432	0.000	0.000	0.000	0.00	90	90.00	A106/BB/	0.00	0.00	0.00	1085	600	334	0	495.300	0.000	0.13000	0.00000	0.00000
RHD02.14B-04E	2	6.625	0	0.432	0.432	0.000	0.000	0.000	1.50	90	0.00	A234/WPBWPB/	0.00	0.00	0.00	1085	600	334	0	495.300	0.000	0.13000	0.00000	0.00000
RHD02.14B-05E	4	6.625	0	0.432	0.432	0.000	0.000	0.000	1.50	90	0.00	A234/WPBWPB/	0.00	0.00	0.00	1085	600	334	0	495.300	0.000	0.13000	0.00000	0.00000
RHD02.14B-06P	54	6.625	0	0.432	0.432	0.000	0.000	0.000	0.00	0	60.00	A106/BB/	0.00	0.00	0.00	1085	600	334	0	495.300	0.000	0.13000	0.00000	0.00000
RHD02.14B-07E	2	6.625	0	0.432	0.432	0.000	0.000	0.000	1.50	90	0.00	A234/WPBWPB/	0.00	0.00	0.00	1085	600	334	0	495.300	0.000	0.13000	0.00000	0.00000
RHD02.14B-08V	22	6.625	0	0.432	0.432	0.000	0.000	0.000	0.00	90	0.00	A105/A105A10/	0.00	0.00	0.00	1085	600	334	0	495.300	0.000	0.13000	0.00000	0.00000
RHD02.14B-09P	58	6.625	0	0.432	0.432	0.000	0.000	0.000	0.00	90	35.00	A106/BB/	0.00	0.00	0.00	1085	600	334	0	495.300	0.000	0.13000	0.00000	0.00000
RHD02.14B-10T	13	6.625	0	0.432	0.432	0.000	6.000	0.432	0.00	90	0.00	A234/WPBWPB/	0.00	0.00	0.00	1085	600	334	0	495.300	0.000	0.13000	0.00000	0.13000
RHD02.14B-11P	63	6.625	0	0.432	0.432	0.000	0.000	0.000	0.00	0	30.00	A106/BB/	0.00	0.00	0.00	1085	600	334	0	495.300	0.000	0.13000	0.00000	0.00000
RHD02.14B-12T	13	6.625	0	0.432	0.432	0.000	6.000	0.432	0.00	90	0.00	A234/WPBWPB/	0.00	0.00	0.00	1085	600	334	0	495.300	0.000	0.13000	0.00000	0.13000
RHD02.14B-14P	63	6.625	0	0.432	0.000	0.000	0.000	0.000	0.00	0	0.00	A106/BB/	0.00	0.00	0.00	1085	600	334	0	495.300	0.000	0.13000	0.00000	0.00000
RHD02.14B-13R	18	8.625	80	0.500	0.000	0.000	6.625	0.432	0.00	90	0.00	A234/WPBWPB/	0.00	0.00	0.00	1085	600	334	0	495.300	0.000	0.13000	0.13000	0.00000
RHD02.15B-01N	30	8.625	80	0.500	0.432	0.000	0.000	0.000	0.00	90	0.00	A105/A105A10/	0.00	0.00	0.00	1085	600	334	0	495.300	0.000	0.13000	0.00000	0.00000
Line Name : RHD-02.15A A HDR to FWH 36C																								
RHD02.15A-01P	64	6.625	0	0.432	0.432	0.000	0.000	0.000	0.00	90	29.00	A106/BB/	0.00	0.00	0.00	1085	600	334	0	495.300	0.000	0.13000	0.00000	0.00000
RHD02.15A-02E	2	6.625	0	0.432	0.000	0.000	0.000	0.000	1.50	90	0.00	A234/WPBWPB/	0.00	0.00	0.00	1085	600	334	0	495.300	0.000	0.13000	0.00000	0.00000
RHD02.15A-03P	52	6.625	0	0.432	0.432	0.000	0.000	0.000	0.00	90	30.00	A106/BB/	0.00	0.00	0.00	1085	600	334	0	495.300	0.000	0.13000	0.00000	0.00000
RHD02.15A-04E	2	6.625	0	0.432	0.432	0.000	0.000	0.000	1.50	90	0.00	A234/WPBWPB/	0.00	0.00	0.00	1085	600	334	0	495.300	0.000	0.13000	0.00000	0.00000
RHD02.15A-05P	52	6.625	0	0.432	0.432	0.000	0.000	0.000	0.00	0	33.00	A106/BB/	0.00	0.00	0.00	1085	600	334	0	495.300	0.000	0.13000	0.00000	0.00000
RHD02.15A-06E	2	6.625	0	0.432	0.432	0.000	0.000	0.000	1.50	90	0.00	A234/WPBWPB/	0.00	0.00	0.00	1085	600	334	0	495.300	0.000	0.13000	0.00000	0.00000
RHD02.15A-07V	22	6.625	0	0.432	0.432	0.000	0.000	0.000	0.00	90	0.00	A105/A105A10/	0.00	0.00	0.00	1085	600	334	0	495.300	0.000	0.13000	0.00000	0.00000
RHD02.15A-08P	58	6.625	0	0.432	0.432	0.000	0.000	0.000	0.00	90	35.00	A106/BB/	0.00	0.00	0.00	1085	600	334	0	495.300	0.000	0.13000	0.00000	0.00000
RHD02.15A-09T	13	6.625	0	0.432	0.432	0.000	6.000	0.432	0.00	90	0.00	A234/WPBWPB/	0.00	0.00	0.00	1085	600	334	0	495.300	0.000	0.13000	0.00000	0.13000
RHD02.15A-10P	63	6.625	0	0.432	0.432	0.000	0.000	0.000	0.00	0	48.00	A106/BB/	0.00	0.00	0.00	1085	600	334	0	495.300	0.000	0.13000	0.00000	0.00000
RHD02.15A-11T	13	6.625	0	0.432	0.000	0.000	6.000	0.432	0.00	90	0.00	A234/WPBWPB/	0.00	0.00	0.00	1085	600	334	0	495.300	0.000	0.13000	0.00000	0.13000
RHD02.15A-13P	63	6.625	0	0.432	0.000	0.000	0.000	0.000	0.00	0	0.00	A106/BB/	0.00	0.00	0.00	1085	600	334	0	495.300	0.000	0.13000	0.00000	0.00000

Component Name	Geom Code	Pipe Size OD (in)	Sch.	Tnom (in)	Tinit (in)	Tcrit (in)	Br/Small End OD (in)	Br/Small Tnom (in)	R / D Ratio	Orient Angle (Deg.)	Pipe Length (in)	Spec/Type/ Class	Material Cr. (%)	Cu. (%)	Mo. (%)	Design Press. (psig)	Design Temp. (Deg. F)	Op. Press. (psig)	Op. Temp. (Deg. F)	Op. Enth. (Btu/lbm)	Op. Qual.	Flow Rate U/S Mn. (Mlbm/hr)	D/S Mn. (Mlbm/hr)	Br.
RHD02.15A-12R	18	8.625	80	0.500	0.000	0.000	6.625	0.432	0.00	90	0.00	A234/WPBWPB/	0.00	0.00	0.00	1085	600	334	0	495.300	0.000	0.13000	0.13000	0.00000
RHD02.16A-01N	30	8.625	0	0.500	0.500	0.000	0.000	0.000	0.00	90	0.00	A105/A105A10/	0.00	0.00	0.00	1085	600	334	0	495.300	0.000	0.13000	0.00000	0.00000
Line Name : RHD-02.7B TK B HDR to FWH 36																								
RHD02.7B-01P	62	8.625	0	0.500	0.500	0.000	0.000	0.000	0.00	180	27.00	A106/BB/	0.00	0.00	0.00	1085	600	334	0	495.300	0.000	0.26000	0.00000	0.00000
RHD02.7B-02E	2	8.625	0	0.500	0.500	0.000	0.000	0.000	1.50	90	0.00	A234/WPBWPB/	0.00	0.00	0.00	1085	600	334	0	495.300	0.000	0.26000	0.00000	0.00000
RHD02.7B-03P	52	8.625	0	0.500	0.500	0.000	0.000	0.000	0.00	90	12.00	A106/BB/	0.00	0.00	0.00	1085	600	334	0	495.300	0.000	0.26000	0.00000	0.00000
RHD02.7B-04E	1	8.625	0	0.500	0.500	0.000	0.000	0.000	1.50	90	0.00	A234/WPBWPB/	0.00	0.00	0.00	1085	600	334	0	495.300	0.000	0.26000	0.00000	0.00000
RHD02.7B-05P	51	8.625	0	0.500	0.500	0.000	0.000	0.000	0.00	90	15.00	A106/BB/	0.00	0.00	0.00	1085	600	334	0	495.300	0.000	0.26000	0.00000	0.00000
RHD02.7B-06E	1	8.625	0	0.500	0.500	0.000	0.000	0.000	1.50	90	0.00	A234/WPBWPB/	0.00	0.00	0.00	1085	600	334	0	495.300	0.000	0.26000	0.00000	0.00000
RHD02.7B-07P	51	8.625	80	0.500	0.543	0.000	0.000	0.000	0.00	90	6.00	A106/BB/	0.00	0.00	0.00	1085	600	334	0	495.300	0.000	0.26000	0.00000	0.00000
Line Name : RHD-02.8A TK A HDR to FWH 36																								
RHD02.8A-01P	62	10.750	0	0.594	0.000	0.000	0.000	0.000	0.00	90	29.00	A106/BB/	0.00	0.00	0.00	1085	600	334	0	495.300	0.000	0.26000	0.00000	0.00000
RHD02.8A-02E	1	10.750	0	0.594	0.594	0.000	0.000	0.000	1.50	90	0.00	A234/WPBWPB/	0.00	0.00	0.00	1085	600	334	0	495.300	0.000	0.26000	0.00000	0.00000
RHD02.8A-03P	51	10.750	0	0.594	0.594	0.000	0.000	0.000	0.00	90	12.00	A106/BB/	0.00	0.00	0.00	1085	600	334	0	495.300	0.000	0.26000	0.00000	0.00000
Line Name : RHD-02.9A TK A HDR to FWH 36																								
RHD02.2A-06L	12	10.750	0	0.594	0.594	0.000	6.000	0.432	0.00	90	0.00	A106/BB/	0.00	0.00	0.00	1085	600	334	0	495.300	0.000	0.26000	0.39000	0.13000
Line Name : RHD-02.8B TK B HDR to FWH 36																								
RHD02.8B-01P	62	10.750	80	0.594	0.609	0.000	0.000	0.000	0.00	90	29.00	A106/BB/	0.00	0.00	0.00	1085	600	334	0	495.300	0.000	0.39000	0.00000	0.00000
RHD02.8B-02E	2	10.750	0	0.594	0.594	0.000	0.000	0.000	1.50	90	0.00	A234/WPBWPB/	0.00	0.00	0.00	1085	600	334	0	495.300	0.000	0.39000	0.00000	0.00000
RHD02.8B-03P	52	10.750	0	0.594	0.594	0.000	0.000	0.000	0.00	0	6.00	A106/BB/	0.00	0.00	0.00	1085	600	334	0	495.300	0.000	0.39000	0.00000	0.00000
RHD02.8B-04E	4	10.750	0	0.594	0.594	0.000	0.000	0.000	1.50	90	0.00	A234/WPBWPB/	0.00	0.00	0.00	1085	600	334	0	495.300	0.000	0.39000	0.00000	0.00000
RHD02.8B-05P	54	10.750	0	0.594	0.594	0.000	0.000	0.000	0.00	90	149.00	A106/BB/	0.00	0.00	0.00	1085	600	334	0	495.300	0.000	0.39000	0.00000	0.00000
RHD02.8B-06T	14	10.750	0	0.594	0.594	0.000	6.000	0.432	0.00	90	0.00	A106/BB/	0.00	0.00	0.00	1085	600	334	0	495.300	0.000	0.39000	0.26000	0.13000
Line Name : RHD-02.9A TK A HDR to FWH 36																								
RHD02.9A-01P	62	10.750	0	0.594	0.594	0.000	0.000	0.000	0.00	90	21.00	A106/BB/	0.00	0.00	0.00	1085	600	334	0	495.300	0.000	0.39000	0.00000	0.00000
RHD02.9A-02E	1	10.750	0	0.594	0.594	0.000	0.000	0.000	1.50	90	0.00	A234/WPBWPB/	0.00	0.00	0.00	1085	600	334	0	495.300	0.000	0.39000	0.00000	0.00000
RHD02.9A-03P	51	10.750	0	0.594	0.594	0.000	0.000	0.000	0.00	90	147.00	A106/BB/	0.00	0.00	0.00	1085	600	334	0	495.300	0.000	0.39000	0.00000	0.00000
RHD02.9A-04E	1	10.750	0	0.594	0.594	0.000	0.000	0.000	1.50	90	0.00	A234/WPBWPB/	0.00	0.00	0.00	1085	600	334	0	495.300	0.000	0.39000	0.00000	0.00000
RHD02.9A-05P	51	10.750	0	0.594	0.594	0.000	0.000	0.000	0.00	90	45.00	A106/BB/	0.00	0.00	0.00	1085	600	334	0	495.300	0.000	0.39000	0.00000	0.00000
RHD02.9A-06E	1	10.750	0	0.594	0.594	0.000	0.000	0.000	1.50	90	0.00	A234/WPBWPB/	0.00	0.00	0.00	1085	600	334	0	495.300	0.000	0.39000	0.00000	0.00000
RHD02.9A-07E	3	10.750	0	0.594	0.594	0.000	0.000	0.000	1.50	90	0.00	A234/WPBWPB/	0.00	0.00	0.00	1085	600	334	0	495.300	0.000	0.39000	0.00000	0.00000
RHD02.9A-08P	53	10.750	0	0.594	0.594	0.000	0.000	0.000	0.00	45	3.00	A106/BB/	0.00	0.00	0.00	1085	600	334	0	495.300	0.000	0.39000	0.00000	0.00000
RHD02.9A-09E	3	10.750	0	0.594	0.594	0.000	0.000	0.000	1.50	90	0.00	A234/WPBWPB/	0.00	0.00	0.00	1085	600	334	0	495.300	0.000	0.39000	0.00000	0.00000
RHD02.9A-10P	53	10.750	0	0.594	0.594	0.000	0.000	0.000	0.00	90	23.00	A106/BB/	0.00	0.00	0.00	1085	600	334	0	495.300	0.000	0.39000	0.00000	0.00000
RHD02.9A-11T	14	10.750	0	0.594	0.594	0.000	6.000	0.432	0.00	90	0.00	A234/WPBWPB/	0.00	0.00	0.00	1085	600	334	0	495.300	0.000	0.39000	0.26000	0.13000
Line Name : RHD-02.9B TK B HDR to FWH 36																								
RHD02.9B-01P	64	10.750	0	0.594	0.594	0.000	0.000	0.000	0.00	90	67.00	A106/BB/	0.00	0.00	0.00	1085	600	334	0	495.300	0.000	0.26000	0.00000	0.00000
RHD02.9B-02T	14	10.750	0	0.594	0.594	0.000	6.000	0.432	0.00	90	0.00	A106/BB/	0.00	0.00	0.00	1085	600	334	0	495.300	0.000	0.26000	0.13000	0.13000

Note: This report is based on the assumption that at least the component U/S Main is included in a flow segment.

Company : Entergy Nuclear Operations, Inc.
Plant : Indian Point
Unit : 3
DB Name: IPEC3

Report Date : 03-Oct-2007
Report Time : 11:53:15

CHECWORKS SFA Version: 2.2 SP-1 (build 70)

Component History Summary Report

SELECTION CRITERIA:

Line Name: *
Drawing Name: *
Comp. Service Status: *

Component Name	Current Component Name	Period Replaced	Replacement Date	Replacement (old) Material
Line Name : EX-01.1 HP EXT to FWH 36 HDR		**Sorted :** **No**		
EX-01.6-01P	EX-01.6-01P	RO8	01/01/1994	A106/B/B
EX-01.1-02E	EX-01.1-02E	RO9	05/14/1997	A234/WPB/WPB
EX-01.1-03P	EX-01.1-03P	RO9	05/14/1997	A106/B/B
EX-01.1-04E	EX-01.1-04E	RO9	05/14/1997	A234/WPB/WPB
EX-01.1-05P	EX-01.1-05P	RO9	05/14/1997	A106/B/B
EX-01.1-06E	EX-01.1-06E	RO9	05/14/1997	A234/WPB/WPB
EX-01.1-07P	EX-01.1-07P	RO9	05/14/1997	A106/B/B
EX-01.1-08R	EX-01.1-08R	RO9	05/14/1997	A234/WPB/WPB
EX-01.6-01P	EX-01.6-01P	RO9	05/14/1997	A691/EFW/22
Line Name : EX-01.2 HP EXT to FWH 36 HDR		**Sorted :** **No**		
EX-01.2-09P	EX-01.2-09P	RO8	01/01/1994	A106/B/B
EX-01.2-02E	EX-01.2-02E	RO9	05/14/1997	A234/WPB/WPB
EX-01.2-03P	EX-01.2-03P	RO9	05/14/1997	A106/B/B
EX-01.2-04E	EX-01.2-04E	RO9	05/14/1997	A234/WPB/WPB
EX-01.2-05P	EX-01.2-05P	RO9	05/14/1997	A106/B/B
EX-01.2-06E	EX-01.2-06E	RO9	05/14/1997	A234/WPB/WPB
EX-01.2-07P	EX-01.2-07P	RO9	05/14/1997	A106/B/B
EX-01.2-08E	EX-01.2-08E	RO9	05/14/1997	A234/WPB/WPB
EX-01.2-09P	EX-01.2-09P	RO9	05/14/1997	A691/EFW/22
Line Name : EX-01.3 HP EXT FWH 36 HEADER		**Sorted :** **No**		
EX-01.2-10L	EX-01.2-10L	RO8	01/01/1994	A106/B/B
EX-01.2-10L	EX-01.2-10L	RO9	05/14/1997	A691/EFW/22
EX-01.3-01P	EX-01.3-01P	RO9	05/14/1997	A106/B/B
EX-01.3-02E	EX-01.3-02E	RO9	05/14/1997	A234/WPB/WPB
EX-01.3-03P	EX-01.3-03P	RO9	05/14/1997	A106/B/B
EX-01.3-04T	EX-01.3-04T	RO9	05/14/1997	A106/B/B
EX-01.3-05P	EX-01.3-05P	RO9	05/14/1997	A106/B/B

Component Name	Current Component Name	Period Replaced	Replacement Date	Replacement (old) Material		
EX-01.3-09E	EX-01.3-09E	RO9	05/14/1997	A234/WPB/WPB		
EX-01.3-10P	EX-01.3-10P	RO9	05/14/1997	A106/B/B		
EX-01.3-11T	EX-01.3-11T	RO9	05/14/1997	A106/B/B		
EX-01.3-12P	EX-01.3-12P	RO9	05/14/1997	A106/B/B		
EX-01.3-13E	EX-01.3-13E	RO9	05/14/1997	A234/WPB/WPB		
EX-01.3-14P	EX-01.3-14P	RO9	05/14/1997	A106/B/B		
EX-01.3-15E	EX-01.3-15E	RO9	05/14/1997	A234/WPB/WPB		
EX-01.3-16P	EX-01.3-16P	RO9	05/14/1997	A106/B/B		
EX-01.3-17T	EX-01.3-17T	RO9	05/14/1997	A106/B/B		
EX-01.3-19E	EX-01.3-19E	RO9	05/14/1997	A234/WPB/WPB		
EX-01.3-20P	EX-01.3-20P	RO9	05/14/1997	A106/B/B		
EX-01.3-21E	EX-01.3-21E 05/14/1997	RO9 A106/B/B	05/14/1997	A234/WPB/WPBEX-01.3-22P	EX-01.3-22P	RO9
EX-01.3-23T	EX-01.3-23T	RO9	05/14/1997	A106/B/B		

Line Name : EX-01.4 HP EXT FWH 36 HEADER **Sorted : No**

EX-01.4-01P	EX-01.4-01P	RO9	05/14/1997	A106/B/B		
EX-01.4-02T	EX-01.4-02T	RO9	05/14/1997	A106/B/B		

Line Name : EX-01.5A HP EX HDR to FWH 36A **Sorted : No**

EX-01.5A-03E	EX-01.5A-03E	RO8	04/18/1992	A234/WPB/WPB		
EX-01.5A-04P	EX-01.5A-04P	RO8	04/18/1992	A106/B/B		
EX-01.5A-05E	EX-01.5A-05E	RO8	04/18/1992	A234/WPB/WPB		
EX-01.5A-06P	EX-01.5A-06P	RO8	04/18/1992	A106/B/B		
EX-01.5A-16L	EX-01.5A-16L	RO8	04/18/1992	A106/B/B		
EX-01.5A-07L	EX-01.5A-07L	RO8	04/18/1992	A106/B/B		
EX-01.5A-08P	EX-01.5A-08P	RO8	04/18/1992	A106/B/B		
EX-01.5A-09E	EX-01.5A-09E	RO8	04/18/1992	A234/WPB/WPB		
EX-01.5A-03E	EX-01.5A-03E	RO9	05/14/1997	A234/WP22/WP2		
EX-01.5A-04P	EX-01.5A-04P	RO9	05/14/1997	A691/EFW/22		
EX-01.5A-05E	EX-01.5A-05E	RO9	05/14/1997	A234/WP22/WP2		
EX-01.5A-06P	EX-01.5A-06P	RO9	05/14/1997	A691/EFW/22		
EX-01.5A-16L	EX-01.5A-16L	RO9	05/14/1997	A691/EFW/22		
EX-01.5A-07L	EX-01.5A-07L	RO9	05/14/1997	A691/EFW/22		
EX-01.5A-08P	EX-01.5A-08P	RO9	05/14/1997	A691/EFW/22		
EX-01.5A-09E	EX-01.5A-09E	RO9	05/14/1997	A234/WP22/WP2		
EX-01.5A-10P	EX-01.5A-10P	RO9	05/14/1997	A106/B/B		
EX-01.5A-12P	EX-01.5A-12P	RO9	05/14/1997	A106/B/B		
EX-01.5A-13E	EX-01.5A-13E	RO9	05/14/1997	A234/WPB/WPB		
EX-01.5A-17P	EX-01.5A-17P	RO9	05/14/1997	A106/B/B		
EX-01.5A-14E	EX-01.5A-14E	RO9	05/14/1997	A234/WPB/WPB		
EX-01.5A-15N	EX-01.5A-15N	RO9	05/14/1997	A105/A105/A10		
EX-01.7-01P	EX-01.7-01P	RO9	05/14/1997	A106/B/B		
EX-01.5A-01R	EX-01.5A-01R	RO9	05/14/1997	A234/WPB/WPB		

Component Name	Current Component Name	Period Replaced	Replacement Date	Replacement (old) Material
EX-01.5A-02P	EX-01.5A-02P	RO9	05/14/1997	A106/B/B
Line Name : EX-01.5B HP EX HDR to FWH 36B		**Sorted : No**		
EX-01.5B-04L	EX-01.5B-04L	RO9	05/14/1997	A106/B/B
EX-01.5B-05P	EX-01.5B-05P	RO9	05/14/1997	A106/B/B
EX-01.5B-06E	EX-01.5B-06E	RO9	05/14/1997	A234/WPB/WPB
EX-01.5B-07E	EX-01.5B-07E	RO9	05/14/1997	A234/WPB/WPB
EX-01.5B-08P	EX-01.5B-08P	RO9	05/14/1997	A106/B/B
EX-01.5B-10P	EX-01.5B-10P	RO9	05/14/1997	A106/B/B
EX-01.5B-11E	EX-01.5B-11E	RO9	05/14/1997	A234/WPB/WPB
EX-01.5B-15P	EX-01.5B-15P	RO9	05/14/1997	A106/B/B
EX-01.5B-12E	EX-01.5B-12E	RO9	05/14/1997	A234/WPB/WPB
EX-01.5B-13N	EX-01.5B-13N	RO9	05/14/1997	A105/A105/A10
EX-01.5B-01P	EX-01.5B-01P	RO9	05/14/1997	A106/B/B
EX-01.5B-02E	EX-01.5B-02E	RO9	05/14/1997	A234/WPB/WPB
EX-01.5B-03P	EX-01.5B-03P	RO9	05/14/1997	A106/B/B
EX.01.5B-14L	EX.01.5B-14L	RO9	05/14/1997	A106/B/B
Line Name : EX-01.5C HP EX HDR to FWH 36C		**Sorted : No**		
EX-01.5C-01P	EX-01.5C-01P	RO9	05/14/1997	A106/B/B
EX-01.5C-02E	EX-01.5C-02E	RO9	05/14/1997	A234/WPB/WPB
EX-01.5C-03P	EX-01.5C-03P	RO9	05/14/1997	A106/B/B
EX.01.5C-14L	EX.01.5C-14L	RO9	05/14/1997	A106/B/B
EX-01.5C-04L	EX-01.5C-04L	RO9	05/14/1997	A106/B/B
EX-01.5C-05P	EX-01.5C-05P	RO9	05/14/1997	A106/B/B
EX-01.5C-06E	EX-01.5C-06E	RO9	05/14/1997	A234/WPB/WPB
EX-01.5C-07E	EX-01.5C-07E	RO9	05/14/1997	A234/WPB/WPB
EX-01.5C-08P	EX-01.5C-08P	RO9	05/14/1997	A106/B/B
EX-01.5C-10P	EX-01.5C-10P	RO9	05/14/1997	A106/B/B
EX-01.5C-11E	EX-01.5C-11E	RO9	05/14/1997	A234/WPB/WPB
EX-01.5C-15P	EX-01.5C-15P	RO9	05/14/1997	A106/B/B
EX-01.5C-12E	EX-01.5C-12E	RO9	05/14/1997	A234/WPB/WPB
EX-01.5C-13N	EX-01.5C-13N	RO9	05/14/1997	A105/A105/A10
Line Name : EX-02.1 PSEP 2A 10" to 35 HDR		**Sorted : No**		
EX-02.1-02P	EX-02.1-02P	RO13	03/13/2005	A53/B/S
EX-02.1-03E	EX-02.1-03E	RO13	03/13/2005	A234/WPB/WPB
EX-02.1-04P	EX-02.1-04P	RO13	03/13/2005	A53/B/S
EX-02.1-05O	EX-02.1-05O	RO13	03/13/2005	A53/B/S
EX-02.1-06T	EX-02.1-06T	RO13	03/13/2005	A53/B/S
EX-02.5-01P	EX-02.5-01P	RO13	03/13/2005	A53/B/S

Component Name	Current Component Name	Period Replaced	Replacement Date	Replacement (old) Material
Line Name :	EX-02.11 PSEP1B 14" to 35 HDR	**Sorted :**	**No**	
EX-02.11-02P	EX-02.11-02P	RO13	03/13/2005	A53/B/S
EX-02.11-03E	EX-02.11-03E	RO13	03/13/2005	A234/WPB/WPB
EX-02.11-04P	EX-02.11-04P	RO13	03/13/2005	A53/B/S
EX-02.11-06O	EX-02.11-06O	RO13	03/13/2005	A53/B/S
EX-02.11-07P	EX-02.11-07P	RO13	03/13/2005	A53/B/S
Line Name :	EX-02.12 PSEP 1B&2B to 35 HDR	**Sorted :**	**No**	
EX-02.9-10T	EX-02.9-10T	RO13	03/13/2005	A53/B/S
EX-02.12-01P	EX-02.12-01P	RO13	03/13/2005	A53/B/S
Line Name :	EX-02.13 PSEP 1B&2B to 35 HDR	**Sorted :**	**No**	
EX-02.13-03P	EX-02.13-03P	RO13	03/11/2005	A53/B/S
EX-02.13-05P	EX-02.13-05P	RO13	03/13/2005	A53/B/S
EX-02.11-05T	EX-02.11-05T	RO13	03/13/2005	A53/B/S
EX-02.13-01P	EX-02.13-01P	RO13	03/13/2005	A53/B/S
EX-02.13-02B	EX-02.13-02B	RO13	03/13/2005	A53/B/S
EX-02.13-03E	EX-02.13-03E	RO13	03/13/2005	A234/WPB/WPB
EX-02.13-04E	EX-02.13-04E	RO13	03/13/2005	A234/WPB/WPB
Line Name :	EX-02.14 FWH 35 HEADER	**Sorted :**	**No**	
EX-02.14-02E	EX-02.14-02E	RO5	05/03/1987	A234/WPB/WPB
EX-02.14-06E	EX-02.14-06E	RO5	05/03/1987	A234/WPB/WPB
EX-02.14-08E	EX-02.14-08E	RO5	05/03/1987	A234/WPB/WPB
EX-02.7-02T	EX-02.7-02T	RO8	01/01/1994	A155/C55/2
EX-02.14-33P	EX-02.14-33P	RO8	01/01/1994	A155/C55/2
EX-02.14-22T	EX-02.14-22T	RO8	01/01/1994	A155/C55/2
EX-02.14-23P	EX-02.14-23P	RO8	01/01/1994	A155/C55/2
EX-02.14-28P	EX-02.14-28P	RO8	01/01/1994	A155/C55/2
EX-02.14-29T	EX-02.14-29T	RO8	01/01/1994	A155/C55/2
Line Name :	EX-02.15 FWH 35 HEADER	**Sorted :**	**No**	
EX-02.15-01P	EX-02.15-01P	RO8	01/01/1994	A155/C55/2
EX-02.15-02T	EX-02.15-02T	RO8	01/01/1994	A155/C55/2
Line Name :	EX-02.16 HDR 35 to FWH 35A	**Sorted :**	**No**	
EX-02.16-08E	EX-02.16-08E	RO4	06/08/1985	A234/WPB/WPB

Component Name	Current Component Name	Period Replaced	Replacement Date	Replacement (old) Material
EX-02.19-01P	EX-02.19-01P	RO8	01/01/1994	A155/C55/2
EX-02.16-01R	EX-02.16-01R	RO8	01/01/1994	A234/WPB/WPB
EX-02.16-02P	EX-02.16-02P	RO11	04/28/2001	A53/B/S
EX-02.16-03E	EX-02.16-03E	RO11	04/28/2001	A234/WPB/WPB
EX-02.16-04P	EX-02.16-04P	RO11	04/28/2001	A53/B/S
EX-02.16-06E	EX-02.16-06E	RO11	04/28/2001	A234/WPB/WPB
EX-02.16-07P	EX-02.16-07P	RO11	04/28/2001	A53/B/S
Line Name : EX-02.17 HDR 35 to FWH 35B		**Sorted : No**		
EX-02.17-05E	EX-02.17-05E	RO4	06/08/1985	A234/WPB/WPB
EX-02.17-01P	EX-02.17-01P	RO8	01/01/1994	A53/B/S
EX-02.17-04P	EX-02.17-04P	RO8	01/01/1994	A53/B/S
EX-02.17-03E	EX-02.17-03E	RO11	04/28/2001	A234/WPB/WPB
EX-02.17-04P	EX-02.17-04P	RO11	04/28/2001	A691/EFW/22
Line Name : EX-02.18 HDR 35 to FWH 35C		**Sorted : No**		
EX-02.18-05E	EX-02.18-05E	RO4	06/08/1985	A234/WPB/WPB
EX-02.18-01P	EX-02.18-01P	RO8	01/01/1994	A53/B/S
EX-02.18-03E	EX-02.18-03E	RO8	01/01/1994	A234/WPB/WPB
EX-02.18-04P	EX-02.18-04P	RO8	01/01/1994	A53/B/S
Line Name : EX-02.2 PSEP 1A 10" to 35 HDR		**Sorted : No**		
EX-02.2-02P	EX-02.2-02P	RO13	03/13/2005	A53/B/S
EX-02.2-03E	EX-02.2-03E	RO13	03/13/2005	A234/WPB/WPB
EX-02.2-04P	EX-02.2-04P	RO13	03/13/2005	A53/B/S
EX-02.2-05E	EX-02.2-05E	RO13	03/13/2005	A234/WPB/WPB
EX-02.2-06P	EX-02.2-06P	RO13	03/13/2005	A53/B/S
EX-02.2-08O	EX-02.2-08O	RO13	03/13/2005	A53/B/S
Line Name : EX-02.4 PSEP2A 14" to 35 HDR		**Sorted : No**		
EX-02.4-02P	EX-02.4-02P	RO13	03/13/2005	A53/B/S
EX-02.4-03E	EX-02.4-03E	RO13	03/13/2005	A234/WPB/WPB
EX-02.4-04P	EX-02.4-04P	RO13	03/13/2005	A53/B/S
EX-02.4-06O	EX-02.4-06O	RO13	03/13/2005	A53/B/S
EX-02.4-07P	EX-02.4-07P	RO13	03/13/2005	A53/B/S
Line Name : EX-02.6 PSEP 1A&2A to 35 HDR		**Sorted : No**		
EX-02.2-07T	EX-02.2-07T	RO13	03/13/2005	A53/B/S
EX-02.6-01P	EX-02.6-01P	RO13	03/13/2005	A53/B/S

Component Name	Current Component Name	Period Replaced	Replacement Date	Replacement (old) Material
Line Name : EX-02.7 PSEP 1A&2A to 35 HDR		**Sorted : No**		
EX-02.7-01P	EX-02.7-01P	RO13	03/13/2005	A53/B/S
EX-02.4-05T	EX-02.4-05T	RO13	03/13/2005	A53/B/S
Line Name : EX-02.8 PSEP 2B 10" to 35 HDR		**Sorted : No**		
EX-02.8-02E	EX-02.8-02E	RO13	03/13/2005	A234/WPB/WPB
EX-02.8-03P	EX-02.8-03P	RO13	03/13/2005	A53/B/S
EX-02.8-04E	EX-02.8-04E	RO13	03/13/2005	A234/WPB/WPB
EX-02.8-05P	EX-02.8-05P	RO13	03/13/2005	A53/B/S
EX-02.8-06E	EX-02.8-06E	RO13	03/13/2005	A234/WPB/WPB
EX-02.8-07O	EX-02.8-07O	RO13	03/13/2005	A53/B/S
EX-02.8-08T	EX-02.8-08T	RO13	03/13/2005	A53/B/S
EX-02.8-09P	EX-02.8-09P	RO13	03/13/2005	A53/B/S
Line Name : EX-02.9 PSEP 1B 10" to 35 HDR		**Sorted : No**		
EX-02.9-02P	EX-02.9-02P	RO12	04/15/2003	A53/B/S
EX-02.9-03E	EX-02.9-03E	RO12	04/15/2003	A234/WPB/WPB
EX-02.9-04P	EX-02.9-04P	RO12	04/15/2003	A53/B/S
EX-02.9-05E	EX-02.9-05E	RO12	04/15/2003	A234/WPB/WPB
EX-02.9-06P	EX-02.9-06P	RO12	04/15/2003	A53/B/S
EX-02.9-02P	EX-02.9-02P	RO13	03/13/2005	A53/B/S
EX-02.9-03E	EX-02.9-03E	RO13	03/13/2005	A234/WPB/WPB
EX-02.9-04P	EX-02.9-04P	RO13	03/13/2005	A53/B/S
EX-02.9-05E	EX-02.9-05E	RO13	03/13/2005	A234/WPB/WPB
EX-02.9-06P	EX-02.9-06P	RO13	03/13/2005	A53/B/S
EX-02.9-07E	EX-02.9-07E	RO13	03/13/2005	A234/WPB/WPB
EX-02.9-08P	EX-02.9-08P	RO13	03/13/2005	A53/B/S
EX-02.9-09E	EX-02.9-09E	RO13	03/13/2005	A234/WPB/WPB
EX-02.9-10P	EX-02.9-10P	RO13	03/13/2005	A53/B/S
EX-02.9-11O	EX-02.9-11O	RO13	03/13/2005	A53/B/S
Line Name : MSD-01.14A TK 33A to HD TK		**Sorted : No**		
MSD-01.15A-18P	MSD-01.15A-18P	RO8	04/19/1992	A53/B/S
MSD-01.15A-19E	MSD-01.15A-19E	RO8	04/19/1992	A234/WPB/WPB
MSD-01.14A-02P	MSD-01.14A-02P	RO10	10/01/1999	A53/B/S
MSD-01.14A-03T	MSD-01.14A-03T	RO10	10/01/1999	A53/B/S
MSD-01.14A-04P	MSD-01.14A-04P	RO10	10/01/1999	A53/B/S
MSD-01.15A-01E	MSD-01.15A-01E	RO10	10/01/1999	A234/WPB/WPB

Component Name	Current Component Name	Period Replaced	Replacement Date	Replacement (old) Material
MSD-01.15A-02V	MSD-01.15A-02V	RO10	10/01/1999	A216/WCB/WCB
MSD-01.15A-03P	MSD-01.15A-03P	RO10	10/01/1999	A53/B/S
MSD-01.15A-04E	MSD-01.15A-04E	RO10	10/01/1999	A234/WPB/WPB
MSD-01.15A-05E	MSD-01.15A-05E	RO10	10/01/1999	A234/WPB/WPB
MSD-01.15A-06P	MSD-01.15A-06P	RO10	10/01/1999	A53/B/S
MSD-01.15A-07E	MSD-01.15A-07E	RO10	10/01/1999	A234/WPB/WPB
MSD-01.15A-08P	MSD-01.15A-08P	RO10	10/01/1999	A53/B/S
MSD-01.15A-21P	MSD-01.15A-21P	RO10	10/01/1999	A53/B/S
MSD-01.15A-09E	MSD-01.15A-09E	RO10	10/01/1999	A234/WPB/WPB
MSD-01.15A-10P	MSD-01.15A-10P	RO10	10/01/1999	A53/B/S
MSD-01.15A-11E	MSD-01.15A-11E	RO10	10/01/1999	A234/WPB/WPB
MSD-01.15A-12P	MSD-01.15A-12P	RO10	10/01/1999	A53/B/S
MSD-01.15A-13E	MSD-01.15A-13E	RO10	10/01/1999	A234/WPB/WPB
MSD-01.15A-14P	MSD-01.15A-14P	RO10	10/01/1999	A53/B/S
MSD-01.15A-22P	MSD-01.15A-22P	RO10	10/01/1999	A53/B/S
MSD-01.15A-15E	MSD-01.15A-15E	RO10	10/01/1999	A234/WPB/WPB
MSD-01.15A-16P	MSD-01.15A-16P	RO10	10/01/1999	A53/B/S
MSD-01.15A-17E	MSD-01.15A-17E	RO10	10/01/1999	A234/WPB/WPB
MSD-01.15A-18P	MSD-01.15A-18P	RO10	10/01/1999	A53/B/S
MSD-01.15A-19E	MSD-01.15A-19E	RO10	10/01/1999	A234/WPB/WPB

Line Name : MSD-01.14B TK 33B to HD TK **Sorted : No**

MSD-01.15B-28P	MSD-01.15B-28P	RO10	10/01/1999	A53/B/S
MSD-01.14B-03T	MSD-01.14B-03T	RO10	10/01/1999	A53/B/S
MSD-01.14B-04P	MSD-01.14B-04P	RO10	10/01/1999	A53/B/S
MSD-01.15B-01E	MSD-01.15B-01E	RO10	10/01/1999	A234/WPB/WPB
MSD-01.15B-02E	MSD-01.15B-02E	RO10	10/01/1999	A234/WPB/WPB
MSD-01.15B-03P	MSD-01.15B-03P	RO10	10/01/1999	A53/B/S
MSD-01.15B-04E	MSD-01.15B-04E	RO10	10/01/1999	A234/WPB/WPB
MSD-01.15B-05V	MSD-01.15B-05V	RO10	10/01/1999	A216/WCB/WCB
MSD-01.15B-06P	MSD-01.15B-06P	RO10	10/01/1999	A53/B/S
MSD-01.15B-07E	MSD-01.15B-07E	RO10	10/01/1999	A234/WPB/WPB
MSD-01.15B-08P	MSD-01.15B-08P	RO10	10/01/1999	A53/B/S
MSD-01.15B-09E	MSD-01.15B-09E	RO10	10/01/1999	A234/WPB/WPB
MSD-01.15B-10P	MSD-01.15B-10P	RO10	10/01/1999	A53/B/S
MSD-01.15B-11E	MSD-01.15B-11E	RO10	10/01/1999	A234/WPB/WPB
MSD-01.15B-12P	MSD-01.15B-12P_1	RO10	10/01/1999	A53/B/S
MSD-01.15B-31P	MSD-01.15B-31P_2	RO10	10/01/1999	A53/B/S
MSD-01.15B-17E	MSD-01.15B-17E	RO10	10/01/1999	A234/WPB/WPB
MSD-01.15B-18P	MSD-01.15B-18P	RO10	10/01/1999	A53/B/S
MSD-01.15B-19E	MSD-01.15B-19E	RO10	10/01/1999	A234/WPB/WPB
MSD-01.15B-20P	MSD-01.15B-20P	RO10	10/01/1999	A53/B/S
MSD-01.15B-21E	MSD-01.15B-21E	RO10	10/01/1999	A234/WPB/WPB
MSD-01.15B-22P	MSD-01.15B-22P	RO10	10/01/1999	A53/B/S
MSD-01.15B-23E	MSD-01.15B-23E	RO10	10/01/1999	A234/WPB/WPB
MSD-01.15B-24P	MSD-01.15B-24P	RO10	10/01/1999	A53/B/S

Component Name	Current Component Name	Period Replaced	Replacement Date	Replacement (old) Material
MSD-01.15B-32P	MSD-01.15B-32P	RO10	10/01/1999	A53/B/S
MSD-01.15B-25E	MSD-01.15B-25E	RO10	10/01/1999	A234/WPB/WPB
MSD-01.15B-26P	MSD-01.15B-26P	RO10	10/01/1999	A53/B/S
MSD-01.15B-27E	MSD-01.15B-27E	RO10	10/01/1999	A234/WPB/WPB
MSD-01.14B-02P	MSD-01.14B-02P	RO10	10/01/1999	A53/B/S

Line Name : MSD-01.4A TK 31A to HD TK **Sorted : No**

MSD-01.4A-02P	MSD-01.4A-02P	RO10	10/01/1999	A53/B/S
MSD-01.4A-03T	MSD-01.4A-03T	RO10	10/01/1999	A53/B/S
MSD-01.4A-04P	MSD-01.4A-04P	RO10	10/01/1999	A53/B/S
MSD-01.5A-01E	MSD-01.5A-01E	RO10	10/01/1999	A234/WPB/WPB
MSD-01.5A-02P	MSD-01.5A-02P	RO10	10/01/1999	A53/B/S
MSD-01.5A-03E	MSD-01.5A-03E	RO10	10/01/1999	A234/WPB/WPB
MSD-01.5A-04P	MSD-01.5A-04P	RO10	10/01/1999	A53/B/S
MSD-01.5A-05E	MSD-01.5A-05E	RO10	10/01/1999	A234/WPB/WPB
MSD-01.5A-06V	MSD-01.5A-06V	RO10	10/01/1999	A216/WCB/WCB
MSD-01.5A-07P	MSD-01.5A-07P	RO10	10/01/1999	A53/B/S
MSD-01.5A-08E	MSD-01.5A-08E	RO10	10/01/1999	A234/WPB/WPB
MSD-01.5A-10E	MSD-01.5A-10E	RO10	10/01/1999	A234/WPB/WPB
MSD-01.5A-11P	MSD-01.5A-11P	RO10	10/01/1999	A53/B/S
MSD-01.5A-12E	MSD-01.5A-12E	RO10	10/01/1999	A234/WPB/WPB
MSD-01.5A-13P	MSD-01.5A-13P	RO10	10/01/1999	A53/B/S
MSD-01.5A-14E	MSD-01.5A-14E	RO10	10/01/1999	A234/WPB/WPB
MSD-01.5A-15P	MSD-01.5A-15P_1	RO10	10/01/1999	A53/B/S
MSD-01.5A-28P_2	MSD-01.5A-28P_2	RO10	10/01/1999	A53/B/S
MSD-01.5A-16E	MSD-01.5A-16E	RO10	10/01/1999	A234/WPB/WPB
MSD-01.5A-17P	MSD-01.5A-17P	RO10	10/01/1999	A53/B/S
MSD-01.5A-18E	MSD-01.5A-18E	RO10	10/01/1999	A234/WPB/WPB
MSD-01.5A-19P	MSD-01.5A-19P	RO10	10/01/1999	A53/B/S
MSD-01.5A-20E	MSD-01.5A-20E	RO10	10/01/1999	A234/WPB/WPB
MSD-01.5A-21P	MSD-01.5A-21P	RO10	10/01/1999	A53/B/S
MSD-01.5A-29P	MSD-01.5A-29P	RO10	10/01/1999	A53/B/S
MSD-01.5A-22E	MSD-01.5A-22E	RO10	10/01/1999	A234/WPB/WPB
MSD-01.5A-23P	MSD-01.5A-23P	RO10	10/01/1999	A53/B/S
MSD-01.5A-24E	MSD-01.5A-24E	RO10	10/01/1999	A234/WPB/WPB
MSD-01.5A-25P	MSD-01.5A-25P	RO10	10/01/1999	A53/B/S
MSD-01.5A-26E	MSD-01.5A-26E	RO10	10/01/1999	A234/WPB/WPB
MSD-01.5A-09P	MSD-01.5A-09P	RO10	10/10/1999	A53/B/S

Line Name : MSD-01.4B TK 31B to HD TK **Sorted : No**

MSD-01.5B-26E	MSD-01.5B-26E	RO8	04/19/1992	A234/WPB/WPB
MSD-01.4B-02P	MSD-01.4B-02P	RO10	10/01/1999	A53/B/S
MSD-01.4B-03E	MSD-01.4B-03E	RO10	10/01/1999	A234/WPB/WPB
MSD-01.4B-04P	MSD-01.4B-04P	RO10	10/01/1999	A53/B/S

Component Name	Current Component Name	Period Replaced	Replacement Date	Replacement (old) Material
MSD-01.4B-05E	MSD-01.4B-05E	RO10	10/01/1999	A234/WPB/WPB
MSD-01.4B-07P	MSD-01.4B-07P	RO10	10/01/1999	A53/B/S
MSD-01.4B-06T	MSD-01.4B-06T	RO10	10/01/1999	A53/B/S
MSD-01.4B-08P	MSD-01.4B-08P	RO10	10/01/1999	A53/B/S
MSD-01.5B-01R	MSD-01.5B-01R	RO10	10/01/1999	A234/WPB/WPB
MSD-01.5B-02P	MSD-01.5B-02P	RO10	10/01/1999	A53/B/S
MSD-01.5B-03E	MSD-01.5B-03E	RO10	10/01/1999	A234/WPB/WPB
MSD-01.5B-04V	MSD-01.5B-04V	RO10	10/01/1999	A216/WCB/WCB
MSD-01.5B-05P	MSD-01.5B-05P	RO10	10/01/1999	A53/B/S
MSD-01.5B-06E	MSD-01.5B-06E	RO10	10/01/1999	A234/WPB/WPB
MSD-01.5B-07P	MSD-01.5B-07P	RO10	10/01/1999	A53/B/S
MSD-01.5B-08E	MSD-01.5B-08E	RO10	10/01/1999	A234/WPB/WPB
MSD-01.5B-09P	MSD-01.5B-09P	RO10	10/01/1999	A53/B/S
MSD-01.5B-10E	MSD-01.5B-10E	RO10	10/01/1999	A234/WPB/WPB
MSD-01.5B-11P	MSD-01.5B-11P_1	RO10	10/01/1999	A53/B/S
MSD-01.5B-16E	MSD-01.5B-16E	RO10	10/01/1999	A234/WPB/WPB
MSD-01.5B-17P	MSD-01.5B-17P	RO10	10/01/1999	A53/B/S
MSD-01.5B-18E	MSD-01.5B-18E	RO10	10/01/1999	A234/WPB/WPB
MSD-01.5B-19P	MSD-01.5B-19P	RO10	10/01/1999	A53/B/S
MSD-01.5B-30P_2	MSD-01.5B-30P_2	RO10	10/01/1999	A53/B/S
MSD-01.5B-20E	MSD-01.5B-20E	RO10	10/01/1999	A234/WPB/WPB
MSD-01.5B-21P	MSD-01.5B-21P	RO10	10/01/1999	A53/B/S
MSD-01.5B-22E	MSD-01.5B-22E	RO10	10/01/1999	A234/WPB/WPB
MSD-01.5B-23P	MSD-01.5B-23P	RO10	10/01/1999	A53/B/S
MSD-01.5B-31P	MSD-01.5B-31P	RO10	10/01/1999	A53/B/S
MSD-01.5B-24E	MSD-01.5B-24E	RO10	10/01/1999	A234/WPB/WPB
MSD-01.5B-25P	MSD-01.5B-25P	RO10	10/01/1999	A53/B/S
MSD-01.5B-32P	MSD-01.5B-32P	RO10	10/01/1999	A53/B/S
MSD-01.5B-26E	MSD-01.5B-26E	RO10	10/01/1999	A234/WPB/WPB
MSD-01.5B-27P	MSD-01.5B-27P	RO10	10/01/1999	A53/B/S

Line Name : MSD-01.9A TK 32A to HD TK **Sorted : No**

MSD-01.10A-24E	MSD-01.10A-24E	RO8	04/19/1992	A234/WPB/WPB
MSD-01.10A-26P_1	MSD-01.10A-26P_1	RO10	10/01/1999	A53/B/S
MSD-01.10A-26P_3	MSD-01.10A-26P_3	RO10	10/01/1999	A53/B/S
MSD-01.10A-14E	MSD-01.10A-14E	RO10	10/01/1999	A234/WPB/WPB
MSD-01.10A-15P	MSD-01.10A-15P	RO10	10/01/1999	A53/B/S
MSD-01.10A-16E	MSD-01.10A-16E	RO10	10/01/1999	A234/WPB/WPB
MSD-01.10A-17P	MSD-01.10A-17P	RO10	10/01/1999	A53/B/S
MSD-01.10A-18E	MSD-01.10A-18E	RO10	10/01/1999	A234/WPB/WPB
MSD-01.10A-19P	MSD-01.10A-19P	RO10	10/01/1999	A53/B/S
MSD-01.10A-27P	MSD-01.10A-27P	RO10	10/01/1999	A53/B/S
MSD-01.10A-20E	MSD-01.10A-20E	RO10	10/01/1999	A234/WPB/WPB
MSD-01.10A-21P	MSD-01.10A-21P	RO10	10/01/1999	A53/B/S
MSD-01.10A-22E	MSD-01.10A-22E	RO10	10/01/1999	A234/WPB/WPB
MSD-01.10A-23P	MSD-01.10A-23P	RO10	10/01/1999	A53/B/S

Component Name	Current Component Name	Period Replaced	Replacement Date	Replacement (old) Material
MSD-01.10A-24E	MSD-01.10A-24E	RO10	10/01/1999	A234/WPB/WPB
MSD-01.9A-02P	MSD-01.9A-02P	RO10	10/01/1999	A53/B/S
MSD-01.9A-03T	MSD-01.9A-03T	RO10	10/01/1999	A53/B/S
MSD-01.9A-04P	MSD-01.9A-04P	RO10	10/01/1999	A53/B/S
MSD-01.10A-01E	MSD-01.10A-01E	RO10	10/01/1999	A234/WPB/WPB
MSD-01.10A-02P	MSD-01.10A-02P	RO10	10/01/1999	A53/B/S
MSD-01.10A-03E	MSD-01.10A-03E	RO10	10/01/1999	A234/WPB/WPB
MSD-01.10A-04P	MSD-01.10A-04P	RO10	10/01/1999	A53/B/S
MSD-01.10A-05E	MSD-01.10A-05E	RO10	10/01/1999	A234/WPB/WPB
MSD-01.10A-06V	MSD-01.10A-06V	RO10	10/01/1999	A216/WCB/WCB
MSD-01.10A-07P	MSD-01.10A-07P	RO10	10/01/1999	A53/B/S
MSD-01.10A-08E	MSD-01.10A-08E	RO10	10/01/1999	A234/WPB/WPB
MSD-01.10A-09P	MSD-01.10A-09P	RO10	10/01/1999	A53/B/S
MSD-01.10A-10E	MSD-01.10A-10E	RO10	10/01/1999	A234/WPB/WPB
MSD-01.10A-11P	MSD-01.10A-11P	RO10	10/01/1999	A53/B/S
MSD-01.10A-12E	MSD-01.10A-12E	RO10	10/01/1999	A234/WPB/WPB
MSD-01.10A-13P	MSD-01.10A-13P	RO10	10/01/1999	A53/B/S

Line Name : MSD-01.9B TK 32B to HD TK **Sorted : No**

MSD-01.10B-10P	MSD-01.10B-10P	RO10	10/01/1999	A53/B/S
MSD-01.10B-29P	MSD-01.10B-29P_2	RO10	10/01/1999	A53/B/S
MSD-01.10B-15E	MSD-01.10B-15E	RO10	10/01/1999	A234/WPB/WPB
MSD-01.10B-16P	MSD-01.10B-16P	RO10	10/01/1999	A53/B/S
MSD-01.10B-17E	MSD-01.10B-17E	RO10	10/01/1999	A234/WPB/WPB
MSD-01.10B-18P	MSD-01.10B-18P	RO10	10/01/1999	A53/B/S
MSD-01.10B-19E	MSD-01.10B-19E	RO10	10/01/1999	A234/WPB/WPB
MSD-01.10B-20P	MSD-01.10B-20P	RO10	10/01/1999	A53/B/S
MSD-01.10B-21E	MSD-01.10B-21E	RO10	10/01/1999	A234/WPB/WPB
MSD-01.10B-22P	MSD-01.10B-22P	RO10	10/01/1999	A53/B/S
MSD-01.10B-30P	MSD-01.10B-30P	RO10	10/01/1999	A53/B/S
MSD-01.10B-23E	MSD-01.10B-23E	RO10	10/01/1999	A234/WPB/WPB
MSD-01.10B-24P	MSD-01.10B-24P	RO10	10/01/1999	A53/B/S
MSD-01.10B-25E	MSD-01.10B-25E	RO10	10/01/1999	A234/WPB/WPB
MSD-01.10B-26P	MSD-01.10B-26P	RO10	10/01/1999	A53/B/S
MSD-01.9B-02P	MSD-01.9B-02P	RO10	10/01/1999	A53/B/S
MSD-01.9B-03T	MSD-01.9B-03T	RO10	10/01/1999	A53/B/S
MSD-01.9B-04P	MSD-01.9B-04P	RO10	10/01/1999	A53/B/S
MSD-01.10B-01E	MSD-01.10B-01E	RO10	10/01/1999	A234/WPB/WPB
MSD-01.10B-02E	MSD-01.10B-02E	RO10	10/01/1999	A234/WPB/WPB
MSD-01.10B-03P	MSD-01.10B-03P	RO10	10/01/1999	A53/B/S
MSD-01.10B-04E	MSD-01.10B-04E	RO10	10/01/1999	A234/WPB/WPB
MSD-01.10B-05V	MSD-01.10B-05V	RO10	10/01/1999	A216/WCB/WCB
MSD-01.10B-06P	MSD-01.10B-06P	RO10	10/01/1999	A53/B/S
MSD-01.10B-07E	MSD-01.10B-07E	RO10	10/01/1999	A234/WPB/WPB
MSD-01.10B-08P	MSD-01.10B-08P	RO10	10/01/1999	A53/B/S
MSD-01.10B-09E	MSD-01.10B-09E	RO10	10/01/1999	A234/WPB/WPB

Component Name	Current Component Name	Period Replaced	Replacement Date	Replacement (old) Material
Line Name :	PD-02.4 PRESEP HDR to HD TK	**Sorted :**	**No**	
PD-02.4-02E	PD-02.4-02E	RO12	03/29/2003	A234/WPB/WPB
PD-02.4-03P	PD-02.4-03P	RO12	03/29/2003	A53/B/S
PD-02.4-04E	PD-02.4-04E	RO12	03/29/2003	A234/WPB/WPB
PD-02.4-05P	PD-02.4-05P	RO12	03/29/2003	A53/B/S
PD-02.4-06E	PD-02.4-06E	RO12	03/29/2003	A234/WPB/WPB
Line Name :	RHD-01.10A_2 TK 33A to A HDR	**Sorted :**	**No**	
RHD02.5A-02R	RHD02.5A-02R	RO7	09/16/1990	A234/WPB/WPB
RHD02.6A-01P	RHD02.6A-01P	RO7	09/16/1990	A106/B/B
RHD02.6A-05P	RHD02.6A-05P	RO14	03/07/2007	A106/B/B
Line Name :	RHD-01.10B_2 TK 33B to B HDR	**Sorted :**	**No**	
RHD02.5B-02R	RHD02.5B-02R	RO7	09/16/1990	A234/WPB/WPB
RHD02.5B-02R	RHD02.5B-02R	RO10	10/18/1999	A234/WPB/WPB
RHD02.6B-01E	RHD02.6B-01E	RO13	03/13/2005	A234/WPB/WPB
Line Name :	RHD-01.1A_2 TK 31A to A HDR	**Sorted :**	**No**	
RHD02.1A-02R	RHD02.1A-02R	RO7	09/16/1990	A234/WPB/WPB
RHD02.2A-01P	RHD02.2A-01P	RO7	09/16/1990	A106/B/B
Line Name :	RHD-01.1B_2 TK 31B to B HDR	**Sorted :**	**No**	
RHD02.1B-02R	RHD02.1B-02R	RO7	09/16/1990	A234/WPB/WPB
RHD02.2B-01P	RHD02.2B-01P	RO7	09/16/1990	A106/B/B
RHD02.1B-02R	RHD02.1B-02R	RO11	05/10/2001	A234/WPB/WPB
Line Name :	RHD-01.3A_2 TK 32A to A HDR	**Sorted :**	**No**	
RHD02.3A-02R	RHD02.3A-02R	RO7	09/16/1990	A234/WPB/WPB
RHD02.4A-01P	RHD02.4A-01P	RO7	09/16/1990	A106/B/B
Line Name :	RHD-01.3B_2 TK 32B to B HDR	**Sorted :**	**No**	
RHD02.3B-02R	RHD02.3B-02R	RO7	09/16/1990	A234/WPB/WPB
RHD02.4B-01P	RHD02.4B-01P	RO7	09/16/1990	A106/B/B
RHD02.3B-02R	RHD02.3B-02R	RO13	03/13/2005	A234/WPB/WPB
Line Name :	RHD-02.14B B HDR to FWH 36C	**Sorted :**	**No**	

Component Name	Current Component Name	Period Replaced	Replacement Date	Replacement (old) Material
RHD02.14B-14P	RHD02.14B-14P	RO14	03/07/2007	A106/B/B
RHD02.14B-02E	RHD02.14B-02E	RO14	03/07/2007	A234/WPB/WPB

Line Name : RHD-02.15A A HDR to FWH 36C **Sorted : No**

RHD02.15A-13P	RHD02.15A-13P	RO14	03/07/2007	A106/B/B
RHD02.15A-02E	RHD02.15A-02E	RO14	03/07/2007	A234/WPB/WPB
RHD02.15A-11T	RHD02.15A-11T	RO14	03/07/2007	A234/WPB/WPB

Appendix F

UT Inspection Data

CHECWORKS Line Name	Component Name	Component Section	Period	Report Number	Tinit orTnom (in.)	Wear (in.)	Method	In LCF Calc (Yes/No)
CD-02.1 1 SGBD HX3to FWH HDR	CD-02.1 1-02P	Entered as U/S Ext. ofCD-02.1 1-03E	RO8		0.322	0.028	Band	No (1)
CD-02.1 1 SGBD HX3to FWH HDR	CD-02.1 1-02P	Entered as U/S Ext. ofCD-02.1 1-03E	RO9	97UT070	0.322	0.033	Band	No (1)
CD-02.1 1 SGBD HX3to FWH HDR	CD-02.11-03E	Main	RO8		0.322	0.068	Blanket	Yes
CD-02.1 1 SGBD HX3to FWH HDR	CD-02.11-03E	Main	RO9	97UT070	0.322	0.060	Blanket	Yes
CD-02.1 1 SGBD HX3to FWH HDR	CD-02.1 1-04P	Entered as D/S Ext. ofCD-02.1 1-03E	RO8		0.322	0.088	Band	Yes
CD-02.1 1 SGBD HX3to FWH HDR	CD-02.1 1-04P	Entered as D/S Ext. ofCD-02.1 1-03E	RO9	97UT070	0.322	0.087	Band	Yes
CD-02.1 1 SGBD HX3to FWH HDR	CD-02.11-05E	Main	RO8		0.322	0.056	Blanket	Yes
CD-02.1 1 SGBD HX3to FWH HDR	CD-02.11-05E	Main	RO9	97UT070	0.322	0.062	Blanket	Yes
CD-02.1 1 SGBD HX3to FWH HDR	CD-02.11-06P	Main	Cycle 13	05UT013	0.322	0.081	Band	Yes
CD-02.1 1 SGBD HX3to FWH HDR	CD-02.11-07E	Main	Cycle 13	05UT013	0.322	0.045	Blanket	Yes
CD-02.1 1 SGBD HX3to FWH HDR	CD-02.11-08P	Main	Cycle 13	05UT013	0.322	0.082	Band	Yes
CD-02.1 1 SGBD HX3to FWH HDR	CD-02.1 1-09P	Entered as U/S Ext ofCD-02.1 1-10E	RO12	03UT041	0.322	0.069	Band	No (2)
CD-02.1 1 SGBD HX3to FWH HDR	CD-02.11-10E	Main	RO12	03UT041	0.322	0.064	Blanket	Yes
CD-02.1 1 SGBD HX3to FWH HDR	CD-02.1 1-11 P	Entered as D/S Ext ofCD-02.1 1-10E	RO12	03UT041	0.322	0.094	Band	Yes

CHECWORKS Line Name	Component Name	Component Section	Period	Report Number	Tinit orTnom (in.)	Wear (in.)	Method	In LCF Calc (Yes/No)
CD-02.1 1 SGBD HX3to FWH HDR	CD-02.1 1-11 P	Entered as U/S Ext ofCD-02.1 1-12E	RO12	03UT041	0.322	0.117	Band	Yes
CD-02.1 1 SGBD HX3to FWH HDR	CD-02.11-12E	Main	RO12	03UT041	0.322	0.061	Blanket	No (8)
CD-02.1 1 SGBD HX3to FWH HDR	CD-02.11-13T	U/S Main	RO12	03UT041	0.562	0.039	Band	No (6)
CD-02.1 1 SGBD HX3to FWH HDR	CD-02.11-13T	D/S Main	RO12	03UT041	0.562	0.042	Band	Yes
CD-02.1 1 SGBD HX3to FWH HDR	CD-02.11-13T	Branch	RO12	03UT041	0.322	0.030	Band	No (1)
CD-02.1 1 SGBD HX3to FWH HDR	CD-02.11-13T	N/A	RO9	97UT100	0.562	N/A	N/A	No (8)
CD-02.1 1 SGBD HX3to FWH HDR	CD-02.12-05P	Entered as D/S Ext. ofCD-02.12-04V	RO9	97UT101	0.562	0.044	Band	Yes
CD-02.1 1 SGBD HX3to FWH HDR	CD-02.12-06E	Main	RO9	97UT101	0.562	0.074	Blanket	Yes
CD-02.1A FWH 32A toHDR	CD-02.1A-13R	U/S Main	RO12	03UT037	0.438	0.063	Band	Yes
CD-02.1A FWH 32A toHDR	CD-02.1A-13R	D/S Main	RO12	03UT037	0.594	0.039	Band	Yes
CD-02.1A FWH 32A toHDR	CD-02.1A-13R	D/S Main	RO9	97UT053	0.594	0.039	Band	Yes
CD-02.1A FWH 32A toHDR	CD-02.1A-13R	U/S Main	RO9	97UT053	0.438	0.088	Band	Yes
CD-02.1 B FWH 32B toHDR	CD-02.1B-09E	Main	RO8		0.438	0.065	Blanket	Yes
CD-02.1 B FWH 32B toHDR	CD-02.1B-09E	Main	RO9	97UT053	0.438	0.065	Blanket	Yes

CHECWORKS Line Name	Component Name	Component Section	Period	Report Number	Tinit orTnom (in.)	Wear (in.)	Method	In LCF Calc (Yes/No)
CD-02.1 B FWH 32B toHDR	CD-02.1B-10P	Entered as Branch ofCD-02.1B-11T	RO12	03UT037	0.438	0.095	Band	Yes
CD-02.1 C FWH 32C toHDR	CD-02.1C-10E	Main	Cycle 10B	99UT074	0.575	0.060	Blanket	Yes
CD-02.1 C FWH 32C toHDR	CD-02.1C-10E	Main	RO8		0.575	0.055	T DAT	Yes
CD-02.1 C FWH 32C toHDR	CD-02.1C-10E	Main	RO9	97UT054	0.575	0.057	Blanket	Yes
CD-02.2 FWH 32 OUTHDR	CD-02.1 B-11T	U/S Main	RO12	03UT037	0.624	0.054	Band	Yes
CD-02.2 FWH 32 OUTHDR	CD-02.1 B-11T	D/S Main	RO12	03UT037	0.624	0.052	Band	Yes
CD-02.2 FWH 32 OUTHDR	CD-02.1B-11T	U/S Main	RO8		0.624	0.041	Band	Yes
CD-02.2 FWH 32 OUTHDR	CD-02.1B-11T	D/S Main	RO8		0.624	0.037	Band	Yes
CD-02.2 FWH 32 OUTHDR	CD-02.1 B-11T	Branch	RO8		0.438	0.103	Band	Yes
CD-02.2 FWH 32 OUTHDR	CD-02.1 B-11T	U/S Main	RO9	97UT053	0.624	0.050	Band	Yes
CD-02.2 FWH 32 OUTHDR	CD-02.1 B-11T	D/S Main	RO9	97UT053	0.624	0.044	Band	Yes
CD-02.2 FWH 32 OUTHDR	CD-02.1 B-11T	Branch	RO9	97UT053	0.438	0.098	Band	Yes
CD-02.2 FWH 32 OUTHDR	CD-02.2-01P	Entered as D/S Ext ofCD-02.1B-11T	RO12	03UT037	0.594	0.053	Band	Yes
CD-02.2 FWH 32 OUTHDR	CD-02.2-01P	Entered as D/S Ext. ofCD-02.1B-11T	RO8		0.594	0.082	Band	Yes

CHECWORKS Line Name	Component Name	Component Section	Period	Report Number	Tinit orTnom (in.)	Wear (in.)	Method	In LCF Calc (Yes/No)
CD-02.2 FWH 32 OUTHDR	CD-02.2-01P	Entered as D/S Ext. ofCD-02.1B-11T	RO9	97UT053	0.594	0.061	Band	Yes
CD-02.2 FWH 32 OUTHDR	CD-02.2-02R	U/S Main	Cycle 10B	99UT074	0.594	0.105	Band	Yes
CD-02.2 FWH 32 OUTHDR	CD-02.2-02R	D/S Main	Cycle 10B	99UT074	0.688	0.074	Band	Yes
CD-02.2 FWH 32 OUTHDR	CD-02.2-02R	U/S Main	RO9	97UT054	0.594	0.043	Band	Yes
CD-02.2 FWH 32 OUTHDR	CD-02.2-02R	D/S Main	RO9	97UT054	0.688	0.015	Band	No (1)
CD-02.3 FWH 32 OUTHDR	CD-02.1C-12T	U/S Main	Cycle 10B	99UT074	0.692	0.032	Band	Yes
CD-02.3 FWH 32 OUTHDR	CD-02.1C-12T	D/S Main	Cycle 10B	99UT074	0.692	0.034	Band	Yes
CD-02.3 FWH 32 OUTHDR	CD-02.1C-12T	Branch	Cycle 10B	99UT074	0.438	0.078	Band	Yes
CD-02.3 FWH 32 OUTHDR	CD-02.1C-12T	U/S Main	RO11	01UT051	0.692	0.044	Band	Yes
CD-02.3 FWH 32 OUTHDR	CD-02.1C-12T	D/S Main	RO11	01UT051	0.692	0.033	Band	No (1)
CD-02.3 FWH 32 OUTHDR	CD-02.1C-12T	Branch	RO11	01UT051	0.438	0.071	Band	Yes
CD-02.3 FWH 32 OUTHDR	CD-02.1C-12T	U/S Main	RO8		0.692	0.043	T DAT	Yes
CD-02.3 FWH 32 OUTHDR	CD-02.1C-12T	Branch	RO8		0.438	0.082	T DAT	Yes
CD-02.3 FWH 32 OUTHDR	CD-02.1C-12T	U/S Main	RO9	97UT054	0.692	0.030	Band	No (1)

CHECWORKS Line Name	Component Name	Component Section	Period	Report Number	Tinit orTnom (in.)	Wear (in.)	Method	In LCF Calc (Yes/No)
CD-02.3 FWH 32 OUTHDR	CD-02.1C-12T	D/S Main	RO9	97UT054	0.692	0.037	Band	Yes
CD-02.3 FWH 32 OUTHDR	CD-02.1C-12T	Branch	RO9	97UT054	0.438	0.093	Band	Yes
CD-02.3 FWH 32 OUTHDR	CD-02.3-01P	Entered as D/S Ext. ofCD-02.1C-12T	Cycle 10B	99UT074	0.736	0.077	Band	Yes
CD-02.3 FWH 32 OUTHDR	CD-02.3-01P	Entered as D/S Ext. ofCD-02.1C-12T	RO11	01UT051	0.736	0.090	Band	Yes
CD-02.3 FWH 32 OUTHDR	CD-02.3-01P	Entered as D/S Ext. ofCD-02.1C-12T	RO8		0.736	0.044	Band	Yes
CD-02.3 FWH 32 OUTHDR	CD-02.3-01P	Entered as D/S Ext. ofCD-02.1C-12T	RO9	97UT054	0.736	0.086	T DAT	Yes
CD-02.4 FWH 32 OUTHDR	CD-02.4-04E	U/S Main	RO8		0.864	0.125	T DAT	No (17)
CD-02.4 FWH 32 OUTHDR	CD-02.5-01P	Main	RO8		0.754	0.125	T DAT	Yes
CD-02.4 FWH 32 OUTHDR	CD-02.5-02E	Main	RO8		0.994	0.279	T DAT	No (3)
CD-02.5 FWH 32 OUTHDR	CD-02.5-03T	U/S Main	RO8		0.688	0.046	Band	Yes
CD-02.5 FWH 32 OUTHDR	CD-02.5-03T	D/S Main	RO8		0.688	0.038	Band	Yes
CD-02.5 FWH 32 OUTHDR	CD-02.5-04T	Branch	Cycle 10B	99UT078	0.438	0.250	Band	No (3)
CD-02.5 FWH 32 OUTHDR	CD-02.5-04T	U/S Main	RO12	03UT039	0.730	0.076	Band	Yes
CD-02.5 FWH 32 OUTHDR	CD-02.5-04T	D/S Main	RO12	03UT039	0.730	0.081	Band	Yes

CHECWORKS Line Name	Component Name	Component Section	Period	Report Number	Tinit orTnom (in.)	Wear (in.)	Method	In LCF Calc (Yes/No)
CD-02.5 FWH 32 OUTHDR	CD-02.5-04T	U/S Main	RO8		0.730	0.070	Band	Yes
CD-02.5 FWH 32 OUTHDR	CD-02.5-04T	D/S Main	RO8		0.730	0.066	Band	Yes
CD-02.5 FWH 32 OUTHDR	CD-02.5-04T	Branch	RO8		0.438	0.252	Band	No (3)
CD-02.5 FWH 32 OUTHDR	CD-02.5-04T	U/S Main	RO9	97UT045	0.730	0.077	Band	Yes
CD-02.5 FWH 32 OUTHDR	CD-02.5-04T	D/S Main	RO9	97UT045	0.730	0.080	Band	Yes
CD-02.5 FWH 32 OUTHDR	CD-02.5-04T	Branch	RO9	97UT047	0.438	0.245	Band	No (3)
CD-02.6 FWH 32 OUTHDR	CD-02.6-01T	U/S Main	RO12	03UT038	0.693	0.077	Max P-P	Yes
CD-02.6 FWH 32 OUTHDR	CD-02.6-01T	D/S Main	RO12	03UT038	0.693	0.067	Max P-P	Yes
CD-02.6 FWH 32 OUTHDR	CD-02.6-01T	Branch	RO12	03UT038	0.406	0.062	Band	Yes
CD-02.6 FWH 32 OUTHDR	CD-02.6-01T	U/S Main	RO8		0.693	0.054	Band	Yes
CD-02.6 FWH 32 OUTHDR	CD-02.6-01T	D/S Main	RO8		0.693	0.039	Band	Yes
CD-02.6 FWH 32 OUTHDR	CD-02.6-01T	N/A	RO8		0.693	0.056	T DAT	No (13)
CD-02.6 FWH 32 OUTHDR	CD-02.6-01T	U/S Main	RO9	97UT045	0.693	0.059	Band	Yes
CD-02.6 FWH 32 OUTHDR	CD-02.6-01T	D/S Main	RO9	97UT045	0.693	0.044	Band	Yes

CHECWORKS Line Name	Component Name	Component Section	Period	Report Number	Tinit orTnom (in.)	Wear (in.)	Method	In LCF Calc (Yes/No)
CD-02.6 FWH 32 OUTHDR	CD-02.6-01T	Branch	RO9	97UT045	0.406	0.053	Band	No (6)
CD-02.6 FWH 32 OUTHDR	CD-02.6-02P	N/A	RO8		0.693	0.052	T DAT	No (13)
CD-02.6 FWH 32 OUTHDR	CD-02.6-02P	Entered as D/S Ext. ofCD-02.6-01T	RO8		0.693	0.062	Band	Yes
CD-02.6 FWH 32 OUTHDR	CD-02.6-02P	Entered as D/S Ext. ofCD-02.6-01T	RO9	97UT045	0.693	0.063	Band	Yes
CD-02.6 FWH 32 OUTHDR	CD-02.6-02P	Entered as U/S Ext. ofCD-02.6-03T	RO9	97UT044	0.693	0.050	Band	No (2)
CD-02.6 FWH 32 OUTHDR	CD-02.6-03T	U/S Main	RO11	01 UT071	0.694	0.058	Band	Yes
CD-02.6 FWH 32 OUTHDR	CD-02.6-03T	D/S Main	RO11	01 UT071	0.694	0.094	Band	Yes
CD-02.6 FWH 32 OUTHDR	CD-02.6-03T	Branch	RO11	01UT071	0.438	0.095	Band	Yes
CD-02.6 FWH 32 OUTHDR	CD-02.6-03T	U/S Main	RO8		0.694	0.061	T DAT	Yes
CD-02.6 FWH 32 OUTHDR	CD-02.6-03T	Branch	RO8		0.438	0.073	T DAT	Yes
CD-02.6 FWH 32 OUTHDR	CD-02.6-03T	U/S Main	RO9	97UT044	0.694	0.032	Band	Yes
CD-02.6 FWH 32 OUTHDR	CD-02.6-03T	D/S Main	RO9	97UT044	0.694	0.063	Band	Yes
CD-02.6 FWH 32 OUTHDR	CD-02.6-03T	Branch	RO9	97UT044	0.438	0.084	Band	Yes
CD-02.8A HDR toFWH 33A	CD-02.7-01P	Entered as D/S Ext. ofCD-02.6-03T	RO11	01UT071	0.675	0.071	Band	No (17)

CHECWORKS Line Name	Component Name	Component Section	Period	Report Number	Tinit orTnom (in.)	Wear (in.)	Method	In LCF Calc (Yes/No)
CD-02.8A HDR toFWH 33A	CD-02.7-01 P	Entered as U/S Ext. ofCD-02.7-02T	RO8		0.675	0.035	Band	No (2)
CD-02.8A HDR toFWH 33A	CD-02.7-01P	Entered as D/S Ext. ofCD-02.6-03T	RO8		0.675	0.034	T DAT	Yes
CD-02.8A HDR toFWH 33A	CD-02.7-01 P	Entered as U/S Ext. ofCD-02.7-02T	RO9	97UT048	0.675	0.052	Band	No (2)
CD-02.8A HDR toFWH 33A	CD-02.7-01P	Entered as D/S Ext. ofCD-02.6-03T	RO9	97UT044	0.675	0.047	Band	Yes
CD-02.8A HDR toFWH 33A	CD-02.7-02T	U/S Main	RO8		0.688	0.035	Band	Yes
CD-02.8A HDR toFWH 33A	CD-02.7-02T	D/S Main	RO8		0.688	0.016	Band	No (1)
CD-02.8A HDR toFWH 33A	CD-02.7-02T	Branch	RO8		0.438	0.082	Band	Yes
CD-02.8A HDR toFWH 33A	CD-02.7-02T	U/S Main	RO9	97UT048	0.688	0.045	Band	Yes
CD-02.8A HDR toFWH 33A	CD-02.7-02T	D/S Main	RO9	97UT048	0.688	0.019	Band	No (1)
CD-02.8A HDR toFWH 33A	CD-02.7-02T	Branch	RO9	97UT048	0.438	0.087	Band	Yes
CD-02.8A HDR toFWH 33A	CD-02.7-02T	D/S Ext.	RO9	97UT048	0.688	0.064	Band	No (14)
CD-02.8A HDR toFWH 33A	CD-02.8A-02E	Main	RO8		0.438	0.231	Blanket	Yes
CD-02.8A HDR toFWH 33A	CD-02.8A-02E	Main	RO9	97UT049	0.438	0.171	Blanket	Yes
CD-02.8A HDR toFWH 33A	CD-02.8A-03P	Entered as D/S Ext. ofCD-02.8A-02E	RO11	01 UT059	0.438	0.082	Band	Yes

CHECWORKS Line Name	Component Name	Component Section	Period	Report Number	Tinit orTnom (in.)	Wear (in.)	Method	In LCF Calc (Yes/No)
CD-02.8A HDR toFWH 33A	CD-02.8A-03P	Entered as D/S Ext. ofCD-02.8A-02E	RO13	05UT044	0.438	0.091	Point toPoint	Yes
CD-02.8A HDR toFWH 33A	CD-02.8A-03P	Entered as D/S Ext. ofCD-02.8A-02E	RO9	97UT049	0.438	0.084	Band	Yes
CD-02.8A HDR toFWH 33A	CD-02.8A-05E	Main	RO11	01UT130	0.438	0.081	Blanket	Yes
CD-02.8A HDR toFWH 33A	CD-02.8A-06P	Entered as D/S Ext. ofCD-02.8A-05E	RO11	01UT130	0.438	0.073	Band	Yes
CD-02.8A HDR toFWH 33A	CD-02.8A-07E	Main	RO11	01UT130	0.438	0.079	Blanket	Yes
CD-02.8A HDR toFWH 33A	CD-02.8A-07E	D/S Ext.	RO11	01UT130	0.438	0.074	Band	No (14)
CD-02.8B HDR toFWH 33B	CD-02.8B-01 P	Main	RO8		0.445	0.081	T DAT	Yes
CD-02.8B HDR toFWH 33B	CD-02.8B-02E	Main	RO11	01UT071	0.438	0.195	Blanket	Yes
CD-02.8B HDR toFWH 33B	CD-02.8B-02E	Main	RO8		0.438	0.234	T DAT	Yes
CD-02.8B HDR toFWH 33B	CD-02.8B-02E	Main	RO9	97UT042	0.438	0.219	Blanket	Yes
CD-02.8B HDR toFWH 33B	CD-02.8B-03P	Entered as D/S Ext. ofCD-02.8B-02E	RO11	01 UT071	0.438	0.083	Band	Yes
CD-02.8B HDR toFWH 33B	CD-02.8B-03P	Entered as D/S Ext. ofCD-02.8B-02E	RO9	97UT043	0.438	0.084	Band	Yes
CD-02.8C HDR toFWH 33C	CD-02.8C-01P	Entered as U/S Ext. ofCD-02.8C-02E	RO11	01 UT052	0.629	0.248	Band	No (2)
CD-02.8C HDR toFWH 33C	CD-02.8C-01P	Entered as Branch ofCD-02.5-04T	RO12	03UT039	0.438	0.248	Band	No (3)

CHECWORKS Line Name	Component Name	Component Section	Period	Report Number	Tinit orTnom (in.)	Wear (in.)	Method	In LCF Calc (Yes/No)
CD-02.9 FWH HDR toSGBD HX3	CD-02.10-02O	Main	RO9	97UT072	0.322	0.147	Band	No (10)
CD-02.9 FWH HDR toSGBD HX3	CD-02.10-03P	Entered as D/S Ext. ofCD-02.10-02O	RO9	97UT071	0.322	0.097	Band	Yes
CD-02.9 FWH HDR toSGBD HX3	CD-02.10-04E	Main	RO9	97UT071	0.322	0.053	Blanket	Yes
CD-02.9 FWH HDR toSGBD HX3	CD-02.10-07P	Entered as U/S Ext. ofCD-02.10-08E	RO8		0.322	0.098	Band	No (2)
CD-02.9 FWH HDR toSGBD HX3	CD-02.10-08E	Main	RO8		0.322	0.035	Blanket	Yes
CD-02.9 FWH HDR toSGBD HX3	CD-02.10-09P	Entered as D/S Ext. ofCD-02.10-08E	RO8		0.322	0.059	Band	Yes
CD-02.9 FWH HDR toSGBD HX3	CD-02.10-10E	Main	RO8		0.322	0.050	Blanket	Yes
CD-03.1A FWH 33A toFWH 34A	CD-03.1A-01N	Main	RO12	03UT077	0.438	0.108	Band	Yes
CD-03.1A FWH 33A toFWH 34A	CD-03.1A-02E	Main	RO12	03UT077	0.438	0.100	Blanket	Yes
CD-03.1A FWH 33A toFWH 34A	CD-03.1A-03E	Main	RO12	03UT077	0.438	0.070	Blanket	Yes
CD-03.1A FWH 33A toFWH 34A	CD-03.1A-04P	Entered as D/S Ext ofCD-03.1A-03E	RO12	03UT077	0.438	0.850	Band	Yes

CHECWORKS Line Name	Component Name	Component Section	Period	Report Number	Tinit orTnom (in.)	Wear (in.)	Method	In LCF Calc (Yes/No)
CD-03.1 B FWH 33B toFWH 34B	CD-03.1B-02E	Main	RO9	97UT094	0.438	0.041	Blanket	Yes
CD-03.1 B FWH 33B toFWH 34B	CD-03.1B-03E	Main	RO9	97UT094	0.438	0.052	Blanket	Yes
CD-03.1 B FWH 33B toFWH 34B	CD-03.1B-04P	Entered as D/S Ext. ofCD-03.1B-03E	RO9	97UT094	0.438	0.074	Band	Yes
CD-03.1 B FWH 33B toFWH 34B	CD-03.1B-05E	Main	RO8		0.547	0.066	Blanket	Yes
CD-03.1 B FWH 33B toFWH 34B	CD-03.1B-06E	Main	RO8		0.555	0.095	Blanket	Yes
CD-03.1 B FWH 33B toFWH 34B	CD-03.1B-07P	Entered as D/S Ext. ofCD-03.1B-06E	RO8		0.477	0.066	Band	Yes
CD-04.1A FWH 34A toFWH 35A	CD-04.1A-01N	Main	Cycle 10B	01126-13.DAT	0.438	0.048	Band	No (8)
CD-04.1A FWH 34A toFWH 35A	CD-04.1A-01N	Entered as U/S Ext. ofCD-04.1A-02E	RO11	01UT073	0.438	0.035	Band	No (2)
CD-04.1A FWH 34A toFWH 35A	CD-04.1A-02E	Main	Cycle 10B	01126-13.DAT	0.438	0.070	Blanket	Yes
CD-04.1A FWH 34A toFWH 35A	CD-04.1A-02E	Main	RO11	01UT073	0.438	0.117	Blanket	Yes
CD-04.1A FWH 34A toFWH 35A	CD-04.1A-03E	Main	Cycle 10B	01126-14.DAT	0.438	0.083	Blanket	Yes
CD-04.1A FWH 34A toFWH 35A	CD-04.1A-03E	Main	RO11	01 UT073	0.438	0.067	Blanket	Yes
CD-04.1A FWH 34A toFWH 35A	CD-04.1A-04P	Entered as D/S Ext. ofCD-04.1A-03E	RO10	01126-14A.DAT	0.438	0.044	Band	Yes
CD-04.1A FWH 34A toFWH 35A	CD-04.1A-04P	Entered as D/S Ext. ofCD-04.1A-03E	RO11	01UT073	0.438	0.094	Band	Yes

CHECWORKS Line Name	Component Name	Component Section	Period	Report Number	Tinit orTnom (in.)	Wear (in.)	Method	In LCF Calc (Yes/No)
CD-04.1 B FWH 34B toFWH 35B	CD-04.1B-01N	Main	RO12	03UT100	0.438	0.117	Band	Yes
CD-04.1 B FWH 34B toFWH 35B	CD-04.1B-02E	Main	RO12	03UT099	0.438	0.067	Blanket	Yes
CD-04.1 B FWH 34B toFWH 35B	CD-04.1B-03E	Main	RO12	03UT099	0.438	0.140	Blanket	Yes
CD-04.1 B FWH 34B toFWH 35B	CD-04.1B-04P	Entered as D/S Ext ofCD-04.1B-03E	RO12	03UT101	0.438	0.062	Band	Yes
CD-04.1 C FWH 34C toFWH 35C	CD-04.1C-02E	Main	RO8		0.594	0.094	Blanket	Yes
CD-04.1 C FWH 34C toFWH 35C	CD-04.1C-03E	Main	RO8		0.570	0.085	Blanket	Yes
CD-05.1A FWH 35A toHDR	CD-05.1A-02E	Main	Cycle 10B	01126-15.DAT	0.438	0.054	Blanket	Yes
CD-05.1A FWH 35A toHDR	CD-05.1A-03E	Main	Cycle 10B	01126-15A.DAT	0.438	0.073	Blanket	Yes
CD-05.1B FWH 35B toHDR	CD-05.1B-01N	Entered as U/S Ext. ofCD-05.1B-02E	RO11	01UT125	0.438	0.195	Band	No (2)
CD-05.1B FWH 35B toHDR	CD-05.1B-02E	Main	Cycle 10B	01126-16.DAT	0.438	0.046	Blanket	Yes
CD-05.1B FWH 35B toHDR	CD-05.1B-02E	Main	RO11	01UT095	0.438	0.075	Blanket	Yes
CD-05.1 B FWH 35B toHDR	CD-05.1B-03E	Main	RO10	01126-17.DAT	0.438	0.083	Blanket	Yes
CD-05.1 B FWH 35B toHDR	CD-05.1B-03E	Main	RO11	01UT095	0.438	0.078	Blanket	Yes
CD-05.1 B FWH 35B toHDR	CD-05.1B-04P	Entered as D/S Ext. ofCD-05.1B-03E	RO11	01UT095	0.438	0.081	Band	Yes

CHECWORKS Line Name	Component Name	Component Section	Period	Report Number	Tinit orTnom (in.)	Wear (in.)	Method	In LCF Calc (Yes/No)
CD-05.1 B FWH 35B toHDR	CD-05.1B-07E	Main	RO8		0.575	0.094	T DAT	Yes
CD-05.1 B FWH 35B toHDR	CD-05.1B-08P	Main	RO8		0.465	0.035	T DAT	Yes
CD-05.1 C FWH 35C toHDR	CD-05.1C-08E	Main	RO8		0.438	0.059	Blanket	Yes
CD-05.1 C FWH 35C toHDR	CD-05.1C-08E	Main	RO9	97UT092	0.438	0.060	Blanket	Yes
CD-05.3 FWH 35 OUTHDR	CD-05.1B-09T	US Main	RO13	05UT063	0.724	0.076	Band	Yes
CD-05.3 FWH 35 OUTHDR	CD-05.1B-09T	DS Main	RO13	05UT063	0.724	0.295	Band	Yes
CD-05.3 FWH 35 OUTHDR	CD-05.1B-09T	Branch	RO13	05UT063	0.438	0.035	Band	Yes
CD-05.3 FWH 35 OUTHDR	CD-05.1 B-09T	U/S Main	RO8		0.724	0.051	T DAT	Yes
CD-05.3 FWH 35 OUTHDR	CD-05.1 B-09T	Branch	RO8		0.438	0.039	T DAT	Yes
CD-05.3 FWH 35 OUTHDR	CD-05.3-01P	Main	RO13	05UT063	0.724	0.056	Band	Yes
CD-05.3 FWH 35 OUTHDR	CD-05.3-01P	Entered as U/S Ext. ofCD-05.1C-10T	RO8		0.724	0.058	Band	No (2)
CD-05.3 FWH 35 OUTHDR	CD-05.3-01P	Main	RO8		0.724	0.055	T DAT	Yes
CD-05.3 FWH 35 OUTHDR	CD-05.3-01P	Entered as U/S Ext. ofCD-05.1C-10T	RO9	97UT092	0.724	0.057	Band	No (2)
CD-05.4 FWH 35 OUTHDR	CD-05.1C-10T	U/S Main	RO8		0.688	0.032	Band	No (1)

CHECWORKS Line Name	Component Name	Component Section	Period	Report Number	Tinit orTnom (in.)	Wear (in.)	Method	In LCF Calc (Yes/No)
CD-05.4 FWH 35 OUTHDR	CD-05.1C-10T	D/S Main	RO8		0.688	0.089	Band	Yes
CD-05.4 FWH 35 OUTHDR	CD-05.1C-10T	Branch	RO8		0.438	0.074	Band	Yes
CD-05.4 FWH 35 OUTHDR	CD-05.1C-10T	U/S Main	RO9	97UT092	0.688	0.027	Band	No (1)
CD-05.4 FWH 35 OUTHDR	CD-05.1C-10T	D/S Main	RO9	97UT092	0.688	0.033	Band	No (1)
CD-05.4 FWH 35 OUTHDR	CD-05.1C-10T	Branch	RO9	97UT092	0.438	0.056	Band	Yes
CD-05.4 FWH 35 OUTHDR	CD-05.4-01E	Main	RO9	97UT092	0.688	0.099	Blanket	Yes
CD-05.4 FWH 35 OUTHDR	CD-05.4-02P	Entered as Br. Ext ofCD-05.4-03T	RO12	03UT082	0.688	0.062	Band	No (2)
CD-05.4 FWH 35 OUTHDR	CD-05.4-02P	Main	RO8		0.722	0.089	T DAT	Yes
CD-05.4 FWH 35 OUTHDR	CD-05.4-02P	Entered as Br. Ext. ofCD-05.4-03T	RO9	97UT065	0.722	0.067	Band	No (2)
CD-05.4 FWH 35 OUTHDR	CD-05.4-03T	U/S Main	RO12	03UT082	0.696	0.019	Band	No (1)
CD-05.4 FWH 35 OUTHDR	CD-05.4-03T	D/S Main	RO12	03UT082	0.696	0.020	Band	No (1)
CD-05.4 FWH 35 OUTHDR	CD-05.4-03T	Branch	RO12	03UT082	0.696	0.044	Band	Yes
CD-05.4 FWH 35 OUTHDR	CD-05.4-03T	US Main	RO13	05UT051	0.696	0.031	Band	No(17)
CD-05.4 FWH 35 OUTHDR	CD-05.4-03T	DS Main	RO13	05UT051	0.696	0.026	Band	No(2)

CHECWORKS Line Name	Component Name	Component Section	Period	Report Number	Tinit orTnom (in.)	Wear (in.)	Method	In LCF Calc (Yes/No)
CD-05.4 FWH 35 OUTHDR	CD-05.4-03T	Branch	RO13	05UT051	0.696	0.045	Band	Yes
CD-05.4 FWH 35 OUTHDR	CD-05.4-03T	U/S Main	RO8		0.696	0.022	T DAT	No (6)
CD-05.4 FWH 35 OUTHDR	CD-05.4-03T	Branch	RO8		0.696	0.052	T DAT	No (17)
CD-05.4 FWH 35 OUTHDR	CD-05.4-03T	U/S Main	RO9	97UT065/66	0.696	0.065	Band	No (6)
CD-05.4 FWH 35 OUTHDR	CD-05.4-03T	D/S Main	RO9	97UT065/66	0.696	0.036	Band	Yes
CD-05.4 FWH 35 OUTHDR	CD-05.4-03T	Branch	RO9	97UT065	0.696	0.061	Band	Yes
CD-05.4 FWH 35 OUTHDR	CD-05.4-04P	Entered as D/S Ext. ofCD-05.1C-10T	RO8		0.688	0.176	Band	Yes
CD-05.4 FWH 35 OUTHDR	CD-05.4-05P	Entered as D/S Ext ofCD-05.4-03T	RO12	03UT082	0.625	0.015	Band	No (1)
CD-05.4 FWH 35 OUTHDR	CD-05.4-05P	Entered as U/S Ext. ofCD-06.1-01T	RO8		0.625	0.012	Band	No (1)
CD-06.1 FWH 35 OUTHDR	CD-06.1-01T	U/S Main	RO8		0.659	0.031	Band	No (1)
CD-06.1 FWH 35 OUTHDR	CD-06.1-01T	D/S Main	RO8		0.659	0.031	Band	No (1)
CD-06.1 FWH 35 OUTHDR	CD-06.1-01T	Branch	RO8		0.500	0.085	Band	Yes
CD-06.1 FWH 35 OUTHDR	CD-06.1-01T	N/A	RO8		0.659	0.029	T DAT	No (13)
CD-06.1 FWH 35 OUTHDR	CD-06.1-01T	U/S Main	RO9	97UT066	0.659	0.022	Band	No (1)

CHECWORKS Line Name	Component Name	Component Section	Period	Report Number	Tinit orTnom (in.)	Wear (in.)	Method	In LCF Calc (Yes/No)
CD-06.1 FWH 35 OUTHDR	CD-06.1-01T	D/S Main	RO9	97UT066	0.659	0.020	Band	No (1)
CD-06.1 FWH 35 OUTHDR	CD-06.1-01T	Branch	RO9	97UT066	0.500	0.114	Band	Yes
CD-06.1 FWH 35 OUTHDR	CD-06.1-02P	Entered as U/S Ext ofCD-05.4-03T	RO12	03UT082	0.625	0.024	Band	No (1)
CD-06.1 FWH 35 OUTHDR	CD-06.1-02P	Entered as D/S Ext. ofCD-06.1-01T	RO8		0.663	0.024	Band	No (1)
CD-06.1 FWH 35 OUTHDR	CD-06.1-02P	N/A	RO8		0.663	0.026	T DAT	No (13)
CD-06.1 FWH 35 OUTHDR	CD-06.1-02P	Entered as D/S Ext. ofCD-06.1-01T	RO9	97UT066	0.663	0.031	Band	No (1)
CD-06.1 FWH 35 OUTHDR	CD-06.1-03T	U/S Main	RO8		0.702	0.028	T DAT	Yes
CD-06.1 FWH 35 OUTHDR	CD-06.1-03T	Branch	RO8		0.721	0.062	T DAT	Yes
CD-06.1 FWH 35 OUTHDR	CD-06.1-03T	U/S Main	RO9	97UT066	0.702	0.033	Band	Yes
CD-06.1 FWH 35 OUTHDR	CD-06.1-03T	D/S Main	RO9	97UT066	0.702	0.029	Band	No (1)
CD-06.1 FWH 35 OUTHDR	CD-06.1-03T	Branch	RO9	97UT066	0.721	0.086	Band	Yes
CD-06.2A HDR to BFP31	CD-06.2A-01 P	Main	RO8		0.721	0.050	T DAT	Yes
CD-06.2A HDR to BFP31	CD-06.2A-01P	Entered as Br. Ext. ofCD-06.1-03T	RO9	97UT066	0.721	0.066	Band	No (2)
CD-06.2A HDR to BFP31	CD-06.2A-02E	Main	RO8		0.729	0.055	T DAT	Yes

CHECWORKS Line Name	Component Name	Component Section	Period	Report Number	Tinit orTnom (in.)	Wear (in.)	Method	In LCF Calc (Yes/No)
CD-06.2A HDR to BFP31	CD-06.2A-23P	Entered as US Ext ofCD-06.2A-24O	RO13	05UT068	0.688	0.043	Band	No(1)
CD-06.2A HDR to BFP31	CD-06.2A-25P	Entered as DS Ext ofCD-06.2A-24O	RO13	05UT068	0.688	0.043	Band	Yes
CD-06.2A HDR to BFP31	CD-06.3A-01 R	U/S Main	RO8		0.688	0.064	Band	Yes
CD-06.2A HDR to BFP31	CD-06.3A-01 R	D/S Main	RO8		0.562	0.040	Band	Yes
CD-06.2A HDR to BFP31	CD-06.3A-02N	U/S Main	RO8		0.562	0.118	Band	Yes
CD-06.2B HDR to BFP32	CD-06.2B-01 R	U/S Ext.	RO11	01 UT062	0.625	0.013	Band	No (2)
CD-06.2B HDR to BFP32	CD-06.2B-01R	U/S Main	RO11	01UT062	0.625	0.171	Band	Yes
CD-06.2B HDR to BFP32	CD-06.2B-01 R	D/S Main	RO11	01 UT062	0.688	0.075	Band	Yes
CD-06.2B HDR to BFP32	CD-06.2B-02P	Entered as D/S Ext. ofCD-06.2B-01 R	RO11	01 UT062	0.688	0.051	Band	Yes
CD-06.2B HDR to BFP32	CD-06.2B-02P	Entered as D/S Ext. ofCD-06.2B-01 R	RO8		0.702	0.063	T DAT	Yes
CD-06.2B HDR to BFP32	CD-06.2B-07P	Imported as US Ext ofCD-06.2B-08O	RO13	05UT059	0.688	0.056	Band	No(1)
CD-06.2B HDR to BFP32	CD-06.2B-08O	N/A	RO9	97UT099	0.688	N/A	N/A	No (15)
CD-06.2B HDR to BFP32	CD-06.2B-09P	Imported as DS Ext ofCD-06.2B-08O	RO13	05UT059	0.688	0.087	Band	Yes
EX-01.1 HP EXT toFWH 36 HDR	EX-01.1-01N	Main	RO12	03UT136	0.330	0.038	Band	No(9)

CHECWORKS Line Name	Component Name	Component Section	Period	Report Number	Tinit orTnom (in.)	Wear (in.)	Method	In LCF Calc (Yes/No)
EX-01.1 HP EXT toFWH 36 HDR	EX-01.1-02E	Main	RO8		0.446	0.133	Blanket	Yes
EX-01.1 HP EXT toFWH 36 HDR	EX-01.1-03P	Entered as D/S Ext. ofEX-01.1-02E	RO8		0.352	0.131	Band	Yes
EX-01.1 HP EXT toFWH 36 HDR	EX-01.1-04E	Main	RO8		0.450	0.127	Blanket	Yes
EX-01.1 HP EXT toFWH 36 HDR	EX-01.1-05P	Main	RO8		0.368	0.037	T DAT	Yes
EX-01.1 HP EXT toFWH 36 HDR	EX-01.1-07P	Entered as U/S Ext. ofEX-01.1-08R	RO8		0.330	0.206	Band	No (2)
EX-01.1 HP EXT toFWH 36 HDR	EX-01.1-08R	D/S Main	RO8		0.438	0.218	Band	Yes
EX-01.1 HP EXT toFWH 36 HDR	EX-01.1-08R	U/S Main	RO8		0.330	0.161	Band	Yes
EX-01.2 HP EXT toFWH 36 HDR	EX-01.2-01N	N/A	RO8		0.330	0.142	T DAT	No (3)
EX-01.2 HP EXT toFWH 36 HDR	EX-01.2-02E	Main	RO8		0.330	0.285	Blanket	Yes
EX-01.2 HP EXT toFWH 36 HDR	EX-01.2-03P	Entered as D/S Ext. ofEX-01.2-02E	RO8		0.385	0.070	Band	Yes
EX-01.2 HP EXT toFWH 36 HDR	EX-01.2-04E	Main	RO8		0.330	0.080	Blanket	Yes
EX-01.2 HP EXT toFWH 36 HDR	EX-01.2-05P	Entered as D/S Ext. ofEX-01.2-04E	RO8		0.330	0.037	Band	Yes
EX-01.2 HP EXT toFWH 36 HDR	EX-01.2-09P	Entered as U/S Ext. ofEX-01.2-10L	RO8		0.357	0.090	Band	No (2)
EX-01.2 HP EXT toFWH 36 HDR	EX-01.2-09P	N/A	RO8		0.357	0.224	T DAT	No (13)

CHECWORKS Line Name	Component Name	Component Section	Period	Report Number	Tinit orTnom (in.)	Wear (in.)	Method	In LCF Calc (Yes/No)
EX-01.3 HP EXT FWH36 HEADER	EX-01.2-10L	U/S Main	RO8		0.482	0.158	Band	Yes
EX-01.3 HP EXT FWH36 HEADER	EX-01.2-10L	D/S Main	RO8		0.482	0.228	Band	Yes
EX-01.3 HP EXT FWH36 HEADER	EX-01.2-10L	Branch	RO8		0.391	0.226	Band	Yes
EX-01.3 HP EXT FWH36 HEADER	EX-01.2-10L	Branch Ext.	RO8		0.391	0.140	Band	No (2)
EX-01.3 HP EXT FWH36 HEADER	EX-01.2-10L	Branch	RO8		0.391	0.192	T DAT	No (13)
EX-01.3 HP EXT FWH36 HEADER	EX-01.2-10L	Run	RO8		0.482	0.187	T DAT	No (13)
EX-01.3 HP EXT FWH36 HEADER	EX-01.2-10L	U/S Main	RO9		0.482	0.000	Baseline	No (5)
EX-01.3 HP EXT FWH36 HEADER	EX-01.2-10L	D/S Main	RO9		0.482	0.000	Baseline	No (5)
EX-01.3 HP EXT FWH36 HEADER	EX-01.2-10L	Branch	RO9		0.391	0.000	Baseline	No (5)
EX-01.3 HP EXT FWH36 HEADER	EX-01.3-01P	Entered as D/S Ext. ofEX-01.2-10L	RO8		0.456	0.152	Band	Yes
EX-01.3 HP EXT FWH36 HEADER	EX-01.3-03P	Entered as U/S Ext. ofEX-01.3-04T	RO8		0.438	0.047	T DAT	No (2)
EX-01.3 HP EXT FWH36 HEADER	EX-01.3-04T	Branch	RO8		0.280	0.036	T DAT	No (14)
EX-01.3 HP EXT FWH36 HEADER	EX-01.3-04T	U/S Main	RO8		0.468	0.098	T DAT	No (17)
EX-01.3 HP EXT FWH36 HEADER	EX-01.3-05P	Main	RO8		0.464	0.094	T DAT	Yes

CHECWORKS Line Name	Component Name	Component Section	Period	Report Number	Tinit orTnom (in.)	Wear (in.)	Method	In LCF Calc (Yes/No)
EX-01.3 HP EXT FWH36 HEADER	EX-01.3-16P	Entered as U/S Ext. ofEX-01.3-17T	RO8		0.460	0.123	Band	No (2)
EX-01.3 HP EXT FWH36 HEADER	EX-01.3-17T	U/S Main	RO8		0.501	0.169	Band	Yes
EX-01.3 HP EXT FWH36 HEADER	EX-01.3-17T	D/S Main	RO8		0.501	0.156	Band	Yes
EX-01.3 HP EXT FWH36 HEADER	EX-01.3-17T	Branch	RO8		0.280	0.037	Band	No (6)
EX-01.3 HP EXT FWH36 HEADER	EX-01.3-19E	Main	RO8		0.438	0.277	Blanket	Yes
EX-01.3 HP EXT FWH36 HEADER	EX-01.3-22P	Entered as U/S Ext. ofEX-01.3-23T	RO8		0.528	0.163	Band	No (2)
EX-01.3 HP EXT FWH36 HEADER	EX-01.3-23T	U/S Main	RO8		0.539	0.042	Band	No (3)
EX-01.3 HP EXT FWH36 HEADER	EX-01.3-23T	D/S Main	RO8		0.539	0.042	Band	No (3)
EX-01.3 HP EXT FWH36 HEADER	EX-01.3-23T	Branch	RO8		0.566	0.333	Band	No (3)
EX-01.4 HP EXT FWH36 HEADER	EX-01.4-01P	Entered as D/S Ext. ofEX-01.3-23T	RO8		0.528	0.039	Band	No (18)
EX-01.4 HP EXT FWH36 HEADER	EX-01.4-01P	N/A	RO8		0.528	0.047	T DAT	No (13)
EX-01.4 HP EXT FWH36 HEADER	EX-01.4-02T	U/S Main	RO8		0.439	0.235	T DAT	Yes
EX-01.4 HP EXT FWH36 HEADER	EX-01.4-02T	Branch	RO8		0.363	0.082	T DAT	Yes
EX-01.4 HP EXT FWH36 HEADER	EX-01.4-02T	U/S Main	RO9		0.439	0.000	Baseline	No (5)

CHECWORKS Line Name	Component Name	Component Section	Period	Report Number	Tinit orTnom (in.)	Wear (in.)	Method	In LCF Calc (Yes/No)
EX-01.4 HP EXT FWH36 HEADER	EX-01.4-02T	D/S Main	RO9		0.439	0.000	Baseline	No (5)
EX-01.4 HP EXT FWH36 HEADER	EX-01.4-02T	Branch	RO9		0.363	0.000	Baseline	No (5)
EX-01.5A HP EX HDRto FWH 36A	EX-01.5A-01R	N/A	RO8		0.438	0.184	T DAT	No (3)
EX-01.5A HP EX HDRto FWH 36A	EX-01.5A-02P	Main	RO8		0.374	0.057	T DAT	Yes
EX-01.5A HP EX HDRto FWH 36A	EX-01.5A-03E	Main	RO8		0.330	0.158	Blanket	No (3)
EX-01.5A HP EX HDRto FWH 36A	EX-01.5A-04P	Entered as D/S Ext. ofEX-01.5A-03E	RO8		0.411	0.190	Band	No (3)
EX-01.5A HP EX HDRto FWH 36A	EX-01.5A-05E	Main	RO8		0.419	0.167	Blanket	No (3)
EX-01.5A HP EX HDRto FWH 36A	EX-01.5A-12P	Main	RO8		0.387	0.166	T DAT	Yes
EX-01.5A HP EX HDRto FWH 36A	EX-01.5A-13E	Main	RO8		0.426	0.106	T DAT	Yes
EX-01.5A HP EX HDRto FWH 36A	EX-01.5A-14E	Main	RO8		0.470	0.170	T DAT	Yes
EX-01.5A HP EX HDRto FWH 36A	EX-01.5A-17P	Main	RO8		0.335	0.090	T DAT	Yes
EX-01.5B HP EX HDRto FWH 36B	EX-01.5B-01P	N/A	RO8		0.363	0.129	T DAT	No (3)
EX-01.5B HP EX HDRto FWH 36B	EX-01.5B-02E	N/A	RO8		0.477	0.137	T DAT	No (3)
EX-01.5B HP EX HDRto FWH 36B	EX-01.5B-10P	Main	RO8		0.374	0.123	T DAT	Yes

CHECWORKS Line Name	Component Name	Component Section	Period	Report Number	Tinit orTnom (in.)	Wear (in.)	Method	In LCF Calc (Yes/No)
EX-01.5B HP EX HDRto FWH 36B	EX-01.5B-11E	Main	RO8		0.452	0.107	T DAT	Yes
EX-01.5B HP EX HDRto FWH 36B	EX-01.5B-12E	N/A	RO8		0.543	0.321	T DAT	No (3)
EX-01.5B HP EX HDRto FWH 36B	EX-01.5B-15P	Main	RO8		0.386	0.127	T DAT	Yes
EX-01.5C HP EX HDRto FWH 36C	EX-01.5C-0 1 P	Entered as U/S Ext. ofEX-01.5C-02E	RO8		0.450	0.307	Band	No (2)
EX-01.5C HP EX HDRto FWH 36C	EX-01.5C-02E	Main	RO8		0.423	0.053	Blanket	Yes
EX-01.5C HP EX HDRto FWH 36C	EX-01.5C-03P	N/A	RO8		0.377	0.130	T DAT	No (3)
EX-01.5C HP EX HDRto FWH 36C	EX-01.5C-04L	U/S Main	RO8		0.364	0.109	T DAT	No (17)
EX-01.5C HP EX HDRto FWH 36C	EX-01.5C-05P	Main	RO8		0.373	0.084	T DAT	Yes
EX-01.5C HP EX HDRto FWH 36C	EX-01.5C-06E	Main	RO8		0.431	0.146	T DAT	Yes
EX-01.5C HP EX HDRto FWH 36C	EX-01.5C-07E	Main	RO8		0.416	0.104	T DAT	Yes
EX-01.5C HP EX HDRto FWH 36C	EX-01.5C-08P	Main	RO8		0.356	0.101	T DAT	Yes
EX-01.5C HP EX HDRto FWH 36C	EX-01.5C-1 0P	Main	RO8		0.358	0.070	T DAT	Yes
EX-01.5C HP EX HDRto FWH 36C	EX-01.5C-11E	Main	RO8		0.448	0.107	T DAT	Yes
EX-01.5C HP EX HDRto FWH 36C	EX-01.5C-12E	N/A	RO8		0.485	0.201	T DAT	No (3)

CHECWORKS Line Name	Component Name	Component Section	Period	Report Number	Tinit orTnom (in.)	Wear (in.)	Method	In LCF Calc (Yes/No)
EX-01.5C HP EX HDRto FWH 36C	EX-01.5C-14L	U/S Main	RO8		0.373	0.067	T DAT	No (17)
EX-01.5C HP EX HDRto FWH 36C	EX-01.5C-15P	Main	RO8		0.337	0.074	T DAT	Yes
EX-02.1 PSEP 2A 10"to 35 HDR	EX-02.1-02P	Main	RO8		0.378	0.067	T DAT	Yes
EX-02.1 PSEP 2A 10"to 35 HDR	EX-02.1-03E	Main	RO12	03UT142	0.425	0.164	Blanket	Yes
EX-02.1 PSEP 2A 10"to 35 HDR	EX-02.1-03E	Main	RO8		0.425	0.110	T DAT	Yes
EX-02.1 PSEP 2A 10"to 35 HDR	EX-02.1-06T	U/S Main	RO12	03UT130	0.500	0.240	Blanket	No(6)
EX-02.1 PSEP 2A 10"to 35 HDR	EX-02.1-06T	D/S Main	RO12	03UT130	0.500	0.204	Blanket	Yes
EX-02.1 PSEP 2A 10"to 35 HDR	EX-02.1-06T	Branch	RO12	03UT130	0.365	0.094	Blanket	Yes
EX-02.1 PSEP 2A 10"to 35 HDR	EX-02.1-06T	Entered as U/S Ext ofEX-02.1-06T	RO12	03UT130	0.500	0.046	Band	No(2)
EX-02.13 PSEP1B&2B to 35 HDR	EX-02.13-02B	Main	RO11	01UT108	0.501	0.130	Blanket	Yes
EX-02.13 PSEP1B&2B to 35 HDR	EX-02.13-02B	Main	RO12	03UT085	0.500	0.127	Blanket	Yes
EX-02.13 PSEP1B&2B to 35 HDR	EX-02.13-03E	Main	RO11	01UT108	0.501	0.143	Blanket	Yes

CHECWORKS Line Name	Component Name	Component Section	Period	Report Number	Tinit orTnom (in.)	Wear (in.)	Method	In LCF Calc (Yes/No)
EX-02.13 PSEP1B&2B to 35 HDR	EX-02.13-03E	D/S Ext.	RO11	01UT108	0.312	0.069	Band	No (14)
EX-02.13 PSEP1B&2B to 35 HDR	EX-02.13-03E	Main	RO12	03UT085	0.375	0.156	Blanket	Yes
EX-02.13 PSEP1B&2B to 35 HDR	EX-02.13-03P	Entered as D/S Ext ofEX-02.13-03E	RO12	03UT086	0.375	0.071	Band	Yes
EX-02.13 PSEP1B&2B to 35 HDR	EX-02.13-04E	Main	RO11	01UT108	0.375	0.117	Blanket	Yes
EX-02.13 PSEP1B&2B to 35 HDR	EX-02.13-04E	Main	RO12	03UT086	0.375	0.120	Blanket	Yes
EX-02.13 PSEP1B&2B to 35 HDR	EX-02.13-05P	Main	RO11	01UT108	0.375	0.072	Band	Yes
EX-02.13 PSEP1B&2B to 35 HDR	EX-02.13-05P	Main	RO12	03UT086	0.375	0.062	Band	Yes
EX-02.14 FWH 35HEADER	EX-02.14-04T	US Main	RO13	05UT032	0.375	0.027	Band	No(2)
EX-02.14 FWH 35HEADER	EX-02.14-04T	DS Main	RO13	05UT032	0.375	0.009	Band	No(2)
EX-02.14 FWH 35HEADER	EX-02.14-04T	Branch	RO13	05UT032	0.280	0.026	Band	No(2)
EX-02. 14 FWH 35HEADER	EX-02.14-12P	Entered as D/S Ext. ofEX-02.14-11V	RO9		0.375	0.185	Band	Yes

CHECWORKS Line Name	Component Name	Component Section	Period	Report Number	Tinit orTnom (in.)	Wear (in.)	Method	In LCF Calc (Yes/No)
EX-02.14 FWH 35HEADER	EX-02.14-14E	Main	RO9		0.375	0.153	Blanket	Yes
EX-02.14 FWH 35HEADER	EX-02.14-16E	Main	RO9		0.375	0.157	Blanket	Yes
EX-02.14 FWH 35HEADER	EX-02.14-18E	Main	RO12	03UT104	0.375	0.146	Blanket	Yes
EX-02. 14 FWH 35HEADER	EX-02.14-19P	Entered as D/S Ext ofEX-02.14-18E	RO12	03UT104	0.375	0.029	Band	No(1)
EX-02.14 FWH 35HEADER	EX-02.14-20E	Main	RO12	03UT104	0.375	0.186	Blanket	Yes
EX-02. 14 FWH 35HEADER	EX-02.14-21P	Entered as D/S Ext ofEX-02.14-20E	RO12	03UT104	0.375	0.038	Band	No(3)
EX-02. 14 FWH 35HEADER	EX-02.14-23P	Entered as U/S Ext ofEX-02.14-24E	RO12	03UT148	0.375	0.024	Band	No(1)
EX-02.14 FWH 35HEADER	EX-02.14-24E	Main	RO12	03UT148	0.375	0.177	Blanket	Yes
EX-02.14 FWH 35HEADER	EX-02.14-25E	Main	RO12	03UT148	0.375	0.210	Blanket	Yes
EX-02. 14 FWH 35HEADER	EX-02.14-26P	Entered as D/S Ext ofEX-02.14-25E	RO12	03UT148	0.375	0.026	Band	No(1)
EX-02. 14 FWH 35HEADER	EX-02.14-26P	Entered as U/S Ext. ofEX-02.14-27E	RO8		0.375	0.023	Band	No(1)
EX-02.14 FWH 35HEADER	EX-02.14-27E	Main	RO12	03UT148	0.375	0.266	Max P-P+ PastWear	Yes
EX-02.14 FWH 35HEADER	EX-02.14-27E	Main	RO8		0.375	0.192	Blanket	Yes

CHECWORKS Line Name	Component Name	Component Section	Period	Report Number	Tinit orTnom (in.)	Wear (in.)	Method	In LCF Calc (Yes/No)
EX-02. 14 FWH 35HEADER	EX-02.14-28P	Entered as D/S Ext ofEX-02.14-27E	RO12	03UT148	0.375	0.011	Band	No(1)
EX-02. 14 FWH 35HEADER	EX-02.14-28P	Entered as D/S Ext. ofEX-02.14-27E	RO8		0.375	0.279	Band	No (3)
EX-02.14 FWH 35HEADER	EX-02.14-32T	U/S Main	RO12	03UT072	0.375	0.030	Band	No(1)
EX-02.14 FWH 35HEADER	EX-02.14-32T	D/S Main	RO12	03UT072	0.375	0.024	Band	No(1)
EX-02.14 FWH 35HEADER	EX-02.14-32T	Branch	RO12	03UT072	0.250	0.070	Band	No(6)
EX-02.14 FWH 35HEADER	EX-02.14-32T	N/A	RO9		N/A	N/A	N/A	No (15)
EX-02.14 FWH 35HEADER	EX-02.7-02T	N/A	RO9		N/A	N/A	N/A	No (15)
EX-02.16 HDR 35 toFWH 35A	EX-02.16-01R	U/S Main	RO10		0.375	0.326	Blanket	No (11)
EX-02.16 HDR 35 toFWH 35A	EX-02.16-01R	D/S Main	RO10		0.312	0.444	Blanket	No (11)
EX-02.16 HDR 35 toFWH 35A	EX-02.16-01R	U/S Main	RO8		0.375	0.284	Blanket	Yes
EX-02.16 HDR 35 toFWH 35A	EX-02.16-01R	D/S Main	RO8		0.312	0.126	Blanket	Yes
EX-02.16 HDR 35 toFWH 35A	EX-02.16-02P	Main	RO10		0.284	0.102	Band	Yes
EX-02.16 HDR 35 toFWH 35A	EX-02.16-02P	Main	RO8		0.284	0.077	Band	Yes
EX-02.16 HDR 35 toFWH 35A	EX-02.16-02P	N/A	RO8		0.284	0.046	T DAT	No (13)

CHECWORKS Line Name	Component Name	Component Section	Period	Report Number	Tinit orTnom (in.)	Wear (in.)	Method	In LCF Calc (Yes/No)
EX-02.16 HDR 35 toFWH 35A	EX-02.16-03E	Main	RO10		0.455	0.274	Blanket	Yes
EX-02.16 HDR 35 toFWH 35A	EX-02.16-03E	U/S Ext.	RO10		0.284	0.106	Band	No (2)
EX-02.16 HDR 35 toFWH 35A	EX-02.16-03E	Main	RO8		0.455	0.242	T DAT	Yes
EX-02.16 HDR 35 toFWH 35A	EX-02.16-04P	Entered as D/S Ext. ofEX-02.16-03E	RO10		0.346	0.060	Band	Yes
EX-02.16 HDR 35 toFWH 35A	EX-02.16-04P	Entered as D/S Ext. ofEX-02.16-03E	RO8		0.346	0.037	T DAT	Yes
EX-02.16 HDR 35 toFWH 35A	EX-02.16-06E	Main	RO10		0.312	0.249	Blanket	Yes
EX-02.16 HDR 35 toFWH 35A	EX-02.16-06E	Main	RO8		0.312	0.176	Blanket	Yes
EX-02.16 HDR 35 toFWH 35A	EX-02.16-06E	N/A	RO8		0.312	0.255	T DAT	No (13)
EX-02.16 HDR 35 toFWH 35A	EX-02.16-06E	Main	RO9		0.312	0.199	Blanket	Yes
EX-02.16 HDR 35 toFWH 35A	EX-02.16-07P	Entered as D/S Ext. ofEX-02.16-06E	RO10		0.380	0.196	Band	Yes
EX-02.16 HDR 35 toFWH 35A	EX-02.16-07P	Entered as D/S Ext. ofEX-02.16-06E	RO8		0.380	0.208	Band	Yes
EX-02.16 HDR 35 toFWH 35A	EX-02.16-07P	N/A	RO8		0.380	0.196	T DAT	No (13)
EX-02.16 HDR 35 toFWH 35A	EX-02.16-07P	Entered as D/S Ext. ofEX-02.16-06E	RO9		0.380	0.187	Band	Yes
EX-02.16 HDR 35 toFWH 35A	EX-02.16-08E	Main	RO10		0.924	0.181	Blanket	Yes

CHECWORKS Line Name	Component Name	Component Section	Period	Report Number	Tinit orTnom (in.)	Wear (in.)	Method	In LCF Calc (Yes/No)
EX-02.16 HDR 35 toFWH 35A	EX-02.16-08E	Main	RO8		0.924	0.165	Blanket	Yes
EX-02.16 HDR 35 toFWH 35A	EX-02.16-08E	Main	RO8		0.924	0.194	T DAT	No (17)
EX-02.16 HDR 35 toFWH 35A	EX-02.16-08E	Main	RO9		0.924	0.174	Blanket	Yes
EX-02.16 HDR 35 toFWH 35A	EX-02.19-01P	N/A	RO8		0.375	0.389	Band	No (3)
EX-02.17 HDR 35 toFWH 35B	EX-02.17-03E	Main	RO10		0.497	0.313	Blanket	Yes
EX-02.17 HDR 35 toFWH 35B	EX-02.17-03E	Main	RO8		0.497	0.268	T DAT	Yes
EX-02.17 HDR 35 toFWH 35B	EX-02.17-04P	Main	RO10		0.378	0.285	Band	No (11)
EX-02.17 HDR 35 toFWH 35B	EX-02.17-04P	Main	RO8		0.378	0.178	T DAT	Yes
EX-02.17 HDR 35 toFWH 35B	EX-02.17-05E	Main	RO10		0.968	0.247	Blanket	Yes
EX-02.17 HDR 35 toFWH 35B	EX-02.17-05E	N/A	RO8		0.968	0.226	T DAT	No (13)
EX-02.17 HDR 35 toFWH 35B	EX-02.17-05E	Main	RO9		0.968	0.184	Blanket	Yes
EX-02.17 HDR 35 toFWH 35B	EX-02.17-06N	Main	RO9		0.293	0.130	Band	Yes
EX-02.18 HDR 35 toFWH 35C	EX-02.18-03E	Main	RO10		0.375	0.160	Blanket	No (11)
EX-02.18 HDR 35 toFWH 35C	EX-02.18-03E	Main	RO8		0.480	0.154	T DAT	Yes

CHECWORKS Line Name	Component Name	Component Section	Period	Report Number	Tinit orTnom (in.)	Wear (in.)	Method	In LCF Calc (Yes/No)
EX-02.18 HDR 35 toFWH 35C	EX-02.18-04P	Main	RO10		0.375	0.024	Band	No (1)
EX-02.18 HDR 35 toFWH 35C	EX-02.18-04P	Main	RO8		0.346	0.129	T DAT	Yes
EX-02.18 HDR 35 toFWH 35C	EX-02.18-05E	Main	RO10		0.312	0.166	Blanket	Yes
EX-02.18 HDR 35 toFWH 35C	EX-02.18-05E	N/A	RO8		0.312	0.207	T DAT	No (3)
EX-02.2 PSEP 1A 10"to 35 HDR	EX-02.2-01N	Main	RO11	01UT124	0.365	0.013	Band	No (1)
EX-02.2 PSEP 1A 10"to 35 HDR	EX-02.2-02P	Entered as D/S Ext. ofEX-02.2-01N	RO11	01UT117	0.365	0.191	Band	Yes
EX-02.2 PSEP 1A 10"to 35 HDR	EX-02.2-02P	Entered as U/S Ext. ofEX-02.2-03E	RO11	01 UT1 17	0.365	0.060	Band	No (2)
EX-02.2 PSEP 1A 10"to 35 HDR	EX-02.2-03E	Main	RO11	01 UT1 13	0.365	0.202	Blanket	Yes
EX-02.2 PSEP 1A 10"to 35 HDR	EX-02.2-04P	Entered as D/S Ext. ofEX-02.2-03E	RO11	01UT113	0.365	0.127	Band	Yes
EX-02.6 PSEP 1A&2Ato 35 HDR	EX-02.2-07T	U/S Main	RO12	03UT130	0.500	0.162	Blanket	Yes
EX-02.6 PSEP 1A&2Ato 35 HDR	EX-02.2-07T	D/S Main	RO12	03UT130	0.500	0.166	Blanket	Yes
EX-02.6 PSEP 1A&2Ato 35 HDR	EX-02.2-07T	Branch	RO12	03UT130	0.365	0.043	Blanket	No (3)
EX-02.7 PSEP 1A&2Ato 35 HDR	EX-02.4-05T	U/S Main	RO12	03UT130	0.500	0.043	Blanket	No(3)
EX-02.7 PSEP 1A&2Ato 35 HDR	EX-02.4-05T	D/S Main	RO12	03UT130	0.500	0.092	Blanket	No(3)

CHECWORKS Line Name	Component Name	Component Section	Period	Report Number	Tinit orTnom (in.)	Wear (in.)	Method	In LCF Calc (Yes/No)
EX-02.7 PSEP 1A&2Ato 35 HDR	EX-02.4-05T	Branch	RO12	03UT130	0.375	0.036	Blanket	No(3)
EX-02.7 PSEP 1A&2Ato 35 HDR	EX-02.4-05T	Br. Ext.	RO12	03UT130	0.375	0.048	Band	No(2)
EX-02.9 PSEP 1 B 10"to 35 HDR	EX-02.9-02P	Entered as U/S Ext ofEX-02.9-03E	RO12	03UT084	0.365	0.124	Band	No(2)
EX-02.9 PSEP 1B 10"to 35 HDR	EX-02.9-02P	Main	RO12	03UT151	0.365	N/A	Baseline	No(5)
EX-02.9 PSEP 1B 10"to 35 HDR	EX-02.9-03E	Main	RO12	03UT084	0.365	0.253	Blanket	Yes
EX-02.9 PSEP 1B 10"to 35 HDR	EX-02.9-03E	Main	RO12	03UT151	0.365	N/A	Baseline	No(5)
EX-02.9 PSEP 1 B 10"to 35 HDR	EX-02.9-04P	Entered as D/S Ext ofEX-02.9-03E	RO12	03UT084	0.365	0.126	Band	Yes
EX-02.9 PSEP 1B 10"to 35 HDR	EX-02.9-04P	Main	RO12	03UT151	0.365	N/A	Baseline	No(5)
EX-02.9 PSEP 1B 10"to 35 HDR	EX-02.9-05E	Main	RO12	03UT084	0.365	0.115	Blanket	Yes
EX-02.9 PSEP 1B 10"to 35 HDR	EX-02.9-05E	Main	RO12	03UT151	0.365	N/A	Baseline	No(5)
EX-02.9 PSEP 1 B 10"to 35 HDR	EX-02.9-06P	Entered as D/S Ext ofEX-02.9-05E	RO12	03UT084	0.365	0.107	Band	Yes
EX-02.9 PSEP 1B 10"to 35 HDR	EX-02.9-06P	Main	RO12	03UT151	0.365	N/A	Baseline	No(5)
EX-02.9 PSEP 1B 10"to 35 HDR	EX-02.9-07E	Main	RO12	03UT141	0.365	0.191	Blanket	Yes
EX-02.9 PSEP 1 B 10"to 35 HDR	EX-02.9-07P	Entered as U/S Ext ofEX-02.9-07E	RO12	03UT141	0.365	0.054	Band	No(2)

CHECWORKS Line Name	Component Name	Component Section	Period	Report Number	Tinit orTnom (in.)	Wear (in.)	Method	In LCF Calc (Yes/No)
EX-02.9 PSEP 1 B 10"to 35 HDR	EX-02.9-08P	Entered as D/S Ext ofEX-02.9-07E	RO12	03UT141	0.365	0.083	Band	Yes
EX-02.9 PSEP 1B 10"to 35 HDR	EX-02.9-09E	Main	RO12	03UT141	0.365	0.190	Blanket	Yes
EX-02.9 PSEP 1 B 10"to 35 HDR	EX-02.9-10P	Entered as D/S Ext ofEX-02.9-09E	RO12	03UT141	0.365	0.033	Band	Yes
EX-03.1A LP EXT 12to FWH 34A	EX-03.1A-35P	N/A	RO8		0.249	0.012	T DAT	No (1)
EX-03.1A LP EXT 12to FWH 34A	EX-03.1A-36E	Main	RO8		0.461	0.079	T DAT	Yes
EX-03.1A LP EXT 12to FWH 34A	EX-03.1A-37P	N/A	RO8		0.253	0.020	T DAT	No (1)
EX-03. 1 B LP EXT 12to FWH 34B	EX-03.1 B-04P	Entered as U/S Ext. ofEX-03.1 B-05T	RO9		0.250	0.111	Band	No (2)
EX-03.1B LP EXT 12to FWH 34B	EX-03.1B-05T	U/S Main	Cycle 10B		0.250	0.036	Band	No (11)
EX-03.1B LP EXT 12to FWH 34B	EX-03. 1 B-05T	D/S Main	Cycle 1 0B		0.250	0.053	Band	No (11)
EX-03.1B LP EXT 12to FWH 34B	EX-03.1B-05T	U/S Main	RO9		0.250	0.081	Band	Yes
EX-03.1B LP EXT 12to FWH 34B	EX-03.1B-05T	D/S Main	RO9		0.250	0.042	Band	Yes

CHECWORKS Line Name	Component Name	Component Section	Period	Report Number	Tinit orTnom (in.)	Wear (in.)	Method	In LCF Calc (Yes/No)
EX-03.1B LP EXT 12to FWH 34B	EX-03.1B-05T	Branch	RO9		0.280	0.076	Band	No (6)
EX-03.1B LP EXT 12to FWH 34B	EX-03.1B-05T	Branch Ext.	RO9		0.280	0.105	Band	No (2)
EX-03.1B LP EXT 12to FWH 34B	EX-03.1B-06E	Main	RO9		0.250	0.059	Blanket	Yes
EX-03.1B LP EXT 12to FWH 34B	EX-03.1B-32P	N/A	RO8		0.263	0.025	T DAT	No (1)
EX-03.1B LP EXT 12to FWH 34B	EX-03.1B-33E	Main	RO8		0.431	0.046	T DAT	Yes
EX-03.1B LP EXT 12to FWH 34B	EX-03.1B-34P	N/A	RO8		0.263	0.025	T DAT	No (1)
EX-03. 1 C LP EXT 12to FWH 34C	EX-03.1C-12P	Entered as D/S Ext. ofEX-03.1C-11V	RO9		0.250	0.049	Band	Yes
EX-03.1C LP EXT 12to FWH 34C	EX-03.1C-13E	Main	RO9		0.250	0.056	Blanket	Yes
EX-03. 1 C LP EXT 12to FWH 34C	EX-03.1C-14P	Entered as D/S Ext. ofEX-03.1C-13E	RO9		0.250	0.040	Band	Yes
EX-03.1C LP EXT 12to FWH 34C	EX-03.1C-36P	N/A	RO8		0.263	0.025	T DAT	No (1)

CHECWORKS Line Name	Component Name	Component Section	Period	Report Number	Tinit orTnom (in.)	Wear (in.)	Method	In LCF Calc (Yes/No)
EX-03.1C LP EXT 12to FWH 34C	EX-03.1C-37E	Main	RO8		0.439	0.096	T DAT	Yes
EX-03.1C LP EXT 12to FWH 34C	EX-03.1C-38P	N/A	RO8		0.259	0.025	T DAT	No (1)
EX-04.11 LPEX FWH33B IN HDR	EX-04.11-18P	N/A	RO8		0.313	0.016	T DAT	No (1)
EX-04.11 LPEX FWH33B IN HDR	EX-04.11-19T	U/S Main	RO11	01UT088	0.313	0.020	Blanket	No (1)
EX-04.11 LPEX FWH33B IN HDR	EX-04.11-19T	D/S Main	RO11	01UT088	0.313	0.026	Blanket	No (1)
EX-04.11 LPEX FWH33B IN HDR	EX-04.11-19T	Branch	RO11	01UT088	0.259	0.047	Blanket	Yes
EX-04.11 LPEX FWH33B IN HDR	EX-04.11-19T	N/A	RO8		0.313	0.026	T DAT	No (1)
EX-04.11 LPEX FWH33B IN HDR	EX-04.11-19T	Branch	RO8		0.259	0.041	T DAT	No (13)
EX-04.11 LPEX FWH33B IN HDR	EX-04.11-19T	Branch	RO9		0.259	0.057	Band	Yes
EX-04.11 LPEX FWH33B IN HDR	EX-04.11-20P	Main	RO11	01UT088	0.313	0.023	Band	No (1)
EX-04. 13 LP EXT 32to FWH 33B	EX-04.12-01P	N/A	RO8		0.313	0.021	T DAT	No (1)
EX-04. 13 LP EXT 32to FWH 33B	EX-04.13-01R	U/S Main	RO11	01UT088	0.313	0.116	Band	Yes

CHECWORKS Line Name	Component Name	Component Section	Period	Report Number	Tinit orTnom (in.)	Wear (in.)	Method	In LCF Calc (Yes/No)
EX-04. 13 LP EXT 32to FWH 33B	EX-04.13-01R	D/S Main	RO11	01UT088	0.250	0.576	Band	No (3)
EX-04. 13 LP EXT 32to FWH 33B	EX-04.13-01R	N/A	RO8		0.313	0.759	T DAT	No (3)
EX-04. 13 LP EXT 32to FWH 33B	EX-04.13-02P	Main	RO11	01UT088	0.255	0.076	Band	Yes
EX-04. 13 LP EXT 32to FWH 33B	EX-04.13-02P	Main	RO8		0.255	0.058	T DAT	Yes
EX-04. 14 LP EXT 32to FWH 33B	EX-04.14-01P	Main	RO11	01UT088	0.276	0.046	Band	Yes
EX-04. 14 LP EXT 32to FWH 33B	EX-04.14-01P	Main	RO8		0.276	0.042	T DAT	Yes
EX-04. 14 LP EXT 32to FWH 33B	EX-04.14-01P	Main	RO9		0.276	0.054	Band	Yes
EX-04. 14 LP EXT 32to FWH 33B	EX-04.14-02E	Main	RO9		0.250	0.073	Blanket	Yes
EX-04.18 LPEX FWH33C IN HDR	EX-04.20-15P	N/A	RO8		0.313	0.025	T DAT	No (1)
EX-04.18 LPEX FWH33C IN HDR	EX-04.20-16T	U/S Main	Cycle 10B		0.384	0.041	Band	No (3)
EX-04.18 LPEX FWH33C IN HDR	EX-04.20-16T	D/S Main	Cycle 10B		0.384	0.051	Band	No (3)

CHECWORKS Line Name	Component Name	Component Section	Period	Report Number	Tinit orTnom (in.)	Wear (in.)	Method	In LCF Calc (Yes/No)
EX-04.18 LPEX FWH33C IN HDR	EX-04.20-16T	Branch	Cycle 10B		0.250	0.073	Band	No (3)
EX-04.18 LPEX FWH33C IN HDR	EX-04.20-16T	U/S Ext.	Cycle 10B		0.313	0.025	Band	No (2)
EX-04.18 LPEX FWH33C IN HDR	EX-04.20-16T	Branch Ext.	Cycle 10B		0.271	0.048	Band	No (2)
EX-04.18 LPEX FWH33C IN HDR	EX-04.20-16T	Branch	RO8		0.250	0.034	T DAT	No (17)
EX-04.18 LPEX FWH33C IN HDR	EX-04.20-16T	Run	RO8		0.384	0.046	T DAT	No (3)
EX-04.21 LP EXT 31to FWH 33C	EX-04.20-17P	N/A	RO8		0.313	0.008	T DAT	No (1)
EX-04.21 LP EXT 31to FWH 33C	EX-04.21-01R	U/S Main	Cycle 10B		0.313	0.109	Blanket	Yes
EX-04.21 LP EXT 31to FWH 33C	EX-04.21-01R	D/S Main	Cycle 10B		0.250	0.546	Blanket	No (3)
EX-04.21 LP EXT 31to FWH 33C	EX-04.21-01R	N/A	RO8		0.313	0.643	T DAT	No (3)
EX-04.21 LP EXT 31to FWH 33C	EX-04.21-02P	Entered as D/S Ext. ofEX-04.21-01R	Cycle 10B		0.267	0.069	Band	Yes
EX-04.21 LP EXT 31to FWH 33C	EX-04.21-02P	Entered as D/S Ext. ofEX-04.21-01R	RO8		0.267	0.058	T DAT	Yes

CHECWORKS Line Name	Component Name	Component Section	Period	Report Number	Tinit orTnom (in.)	Wear (in.)	Method	In LCF Calc (Yes/No)
EX-04.21 LP EXT 31to FWH 33C	EX-04.21-03E	Main	Cycle 10B		0.250	0.118	Blanket	Yes
EX-04.21 LP EXT 31to FWH 33C	EX-04.21-04P	Main	Cycle 13	05UT003	0.250	0.050	Band	Yes
EX-04.21 LP EXT 31to FWH 33C	EX-04.21-04P	Entered as U/S Ext. ofEX-04.21-05E	RO9		0.250	0.054	Band	No (2)
EX-04.21 LP EXT 31to FWH 33C	EX-04.21-05E	Main	RO9		0.250	0.070	Blanket	Yes
EX-04.21 LP EXT 31to FWH 33C	EX-04.21-07T	U/S Main	Cycle 10B		0.250	0.073	Band	Yes
EX-04.21 LP EXT 31to FWH 33C	EX-04.21-07T	D/S Main	Cycle 10B		0.250	0.037	Band	Yes
EX-04.22 LP EXT 31to FWH 33C	EX-04.22-01 P	Main	RO8		0.271	0.037	T DAT	Yes
EX-04.4 LPEX FWH33A IN HDR	EX-04.4-21P	N/A	RO8		0.313	0.021	T DAT	No (1)
EX-04.4 LPEX FWH33A IN HDR	EX-04.4-22T	Branch Ext.	Cycle 10B		0.264	0.044	Band	No (2)
EX-04.4 LPEX FWH33A IN HDR	EX-04.4-22T	U/S Main	Cycle 10B		0.352	0.026	Band	No (1)
EX-04.4 LPEX FWH33A IN HDR	EX-04.4-22T	D/S Main	Cycle 10B		0.352	0.037	Band	No (3)

CHECWORKS Line Name	Component Name	Component Section	Period	Report Number	Tinit orTnom (in.)	Wear (in.)	Method	In LCF Calc (Yes/No)
EX-04.4 LPEX FWH33A IN HDR	EX-04.4-22T	Branch	Cycle 10B		0.259	0.089	Band	No (3)
EX-04.4 LPEX FWH33A IN HDR	EX-04.4-22T	U/S Ext.	Cycle 10B		0.313	0.022	Band	No (2)
EX-04.4 LPEX FWH33A IN HDR	EX-04.4-22T	US Main	RO13	05UT031	0.352	0.041	Band	No(17)
EX-04.4 LPEX FWH33A IN HDR	EX-04.4-22T	DS Main	RO13	05UT031	0.352	0.039	Band	No(17)
EX-04.4 LPEX FWH33A IN HDR	EX-04.4-22T	Branch	RO13	05UT031	0.259	0.113	Band	No(17)
EX-04.4 LPEX FWH33A IN HDR	EX-04.4-22T	N/A	RO8		0.352	0.030	T DAT	No (1)
EX-04.4 LPEX FWH33A IN HDR	EX-04.4-22T	Branch	RO8		0.259	0.050	T DAT	No (17)
EX-04.6 LP EXT toFWH 33A	EX-04.5-01P	N/A	RO8		0.313	0.017	T DAT	No (1)
EX-04.6 LP EXT toFWH 33A	EX-04.6-01R	U/S Main	Cycle 10B		0.313	0.115	Blanket	Yes
EX-04.6 LP EXT toFWH 33A	EX-04.6-01R	D/S Main	Cycle 10B		0.250	0.552	Blanket	No (3)
EX-04.6 LP EXT toFWH 33A	EX-04.6-01R	N/A	RO8		0.313	0.666	T DAT	No (3)
EX-04.6 LP EXT toFWH 33A	EX-04.6-02P	Entered as D/S Ext. ofEX-04.6-01R	Cycle 10B		0.264	0.065	Band	Yes
EX-04.6 LP EXT toFWH 33A	EX-04.6-02P	Entered as D/S Ext. ofEX-04.6-01R	RO8		0.264	0.055	T DAT	Yes
EX-04.6 LP EXT toFWH 33A	EX-04.6-03E	Main	Cycle 10B		0.461	0.152	Blanket	Yes

CHECWORKS Line Name	Component Name	Component Section	Period	Report Number	Tinit orTnom (in.)	Wear (in.)	Method	In LCF Calc (Yes/No)
EX-04.6 LP EXT toFWH 33A	EX-04.6-03E	Main	RO8		0.461	0.149	T DAT	Yes
EX-04.6 LP EXT toFWH 33A	EX-04.6-04P	Main	RO8		0.279	0.039	T DAT	Yes
EX-04.6 LP EXT toFWH 33A	EX-04.6-04P	Entered as U/S Ext. ofEX-04.6-05E	RO9		0.250	0.042	Band	No (2)
EX-04.6 LP EXT toFWH 33A	EX-04.6-07T	U/S Main	Cycle 10B		0.262	0.029	Band	No (1)
EX-04.6 LP EXT toFWH 33A	EX-04.6-07T	D/S Main	Cycle 10B		0.262	0.027	Band	No (1)
EX-04.6 LP EXT toFWH 33A	EX-04.6-07T	U/S Main	RO8		0.262	0.036	T DAT	No (17)
EX-04.7 LP EXT toFWH 33A	EX-04.7-01 P	Main	RO8		0.264	0.042	T DAT	Yes
EX-05.1B LP EXT 16to FWH 32B	EX-05.1B-01N	Main	RO13	05UT095	0.250	0.039	Band	No(9)
EX-05.1B LP EXT 16to FWH 32B	EX-05.1B-02P	Main	RO13	05UT095	0.250	0.070	Band	Yes
EX-05.1B LP EXT 16to FWH 32B	EX-05.1B-03E	Main	RO13	05UT095	0.250	0.061	Blanket	Yes
EX-05.1B LP EXT 16to FWH 32B	EX-05.1B-04N	Main	RO13	05UT095	0.375	0.072	Band	Yes
EX-05.2B LP EXT 15to FWH 32B	EX-05.2B-01N	Main	RO13	05UT105	0.250	0.104	Band	Yes

CHECWORKS Line Name	Component Name	Component Section	Period	Report Number	Tinit orTnom (in.)	Wear (in.)	Method	In LCF Calc (Yes/No)
EX-05.2B LP EXT 15to FWH 32B	EX-05.2B-02E	Main	RO13	05UT105	0.250	0.111	Blanket	Yes
EX-05.2B LP EXT 15to FWH 32B	EX-05.2B-03E	Main	RO13	05UT105	0.250	0.093	Blanket	Yes
EX-05.2B LP EXT 15to FWH 32B	EX-05.2B-04P	Main	RO13	05UT105	0.250	0.134	Band	Yes
EX-05.2B LP EXT 15to FWH 32B	EX-05.2B-05E	Main	RO13	05UT105	0.250	0.163	Blanket	Yes
EX-05.2B LP EXT 15to FWH 32B	EX-05.2B-06N	Main	RO13	05UT105	0.375	0.133	Band	Yes
FW-01.1A BFP 31 toRCIRC T	FW-01.1A-01N	Main	RO13	05UT080	1.031	0.594	Band	No(11)
FW-01.1A BFP 31 toRCIRC T	FW-01.1A-01N	Main	RO8		1.031	0.082	Band	No (3)
FW-01.1A BFP 31 toRCIRC T	FW-01.1A-02P	Main	RO13	05UT080	1.075	0.085	Band	Yes
FW-01.1A BFP 31 toRCIRC T	FW-01.1A-02P	Entered as D/S Ext. ofFW-01.1A-01N	RO8		1.075	0.058	Band	Yes
FW-01.1A BFP 31 toRCIRC T	FW-01.1A-03R	US Main	RO13	05UT080	1.095	0.086	Band	Yes
FW-01.1A BFP 31 toRCIRC T	FW-01.1A-03R	DS Main	RO13	05UT080	1.031	0.065	Band	Yes
FW-01.1A BFP 31 toRCIRC T	FW-01.1A-03R	D/S Main	RO8		1.031	0.094	Band	Yes

CHECWORKS Line Name	Component Name	Component Section	Period	Report Number	Tinit orTnom (in.)	Wear (in.)	Method	In LCF Calc (Yes/No)
FW-01.1A BFP 31 toRCIRC T	FW-01.1A-03R	U/S Main	RO8		1.095	0.067	Band	Yes
FW-01.1A BFP 31 toRCIRC T	FW-01.2A-01E	Main	RO8		1.031	0.165	Blanket	Yes
FW-01.1A BFP 31 toRCIRC T	FW-01.2A-02P	Entered as D/S Ext. ofFW-01.2A-01E	RO8		1.043	0.058	Band	Yes
FW-01.1A BFP 31 toRCIRC T	FW-01 .2A-03T	U/S Ext.	RO8		1.043	0.052	T DAT	No (2)
FW-01.1A BFP 31 toRCIRC T	FW-01.2A-03T	N/A	RO8		1.039	0.048	T DAT	No (1)
FW-01 .1 B BFP 32 toRCIRC T	FW-01.1B-01N	Main	RO8		1.031	0.041	Band	No (1)
FW-01 .1 B BFP 32 toRCIRC T	FW-01.1B-02P	Entered as U/S Ext. ofFW-01.1B-03R	RO11	01UT087	1.176	0.032	Band	
FW-01 .1 B BFP 32 toRCIRC T	FW-01.1B-02P	Entered as D/S Ext. ofFW-01.1B-01N	RO8		1.176	0.128	Band	
FW-01 .1 B BFP 32 toRCIRC T	FW-01.1B-03R	U/S Main	RO11	01UT087	1.095	0.092	Band	
FW-01 .1 B BFP 32 toRCIRC T	FW-01.1B-02P	Entered as U/S Ext. ofFW-01.1B-03R	RO11	01UT087	1.176	0.032	Band	No (2)
FW-01 .1 B BFP 32 toRCIRC T	FW-01.1B-02P	Entered as D/S Ext. ofFW-01.1B-01N	RO8		1.176	0.128	Band	Yes
FW-01 .1 B BFP 32 toRCIRC T	FW-01.1B-03R	U/S Main	RO11	01UT087	1.095	0.092	Band	Yes
FW-01 .1 B BFP 32 toRCIRC T	FW-01.1B-03R	D/S Main	RO11	01UT087	1.031	0.094	Band	Yes
FW-01 .1 B BFP 32 toRCIRC T	FW-01.1B-03R	D/S Main	RO8		1.031	0.086	Band	Yes

CHECWORKS Line Name	Component Name	Component Section	Period	Report Number	Tinit orTnom (in.)	Wear (in.)	Method	In LCF Calc (Yes/No)
FW-01 .1 B BFP 32 toRCIRC T	FW-01.1B-03R	U/S Main	RO8		1.095	0.078	Band	Yes
FW-01 .1 B BFP 32 toRCIRC T	FW-01.2B-01E	Main	RO8		1.031	0.208	Blanket	Yes
FW-01 .1 B BFP 32 toRCIRC T	FW-01.2B-03E	N/A	RO8		1.251	0.208	T DAT	No (13)
FW-01 .1 B BFP 32 toRCIRC T	FW-01.2B-03E	Main	RO8		1.251	0.199	Blanket	Yes
FW-01 .1 B BFP 32 toRCIRC T	FW-01.2B-04P	N/A	RO8		1.032	0.053	T DAT	No (13)
FW-01 .1 B BFP 32 toRCIRC T	FW-01.2B-04P	Entered as D/S Ext. ofFW-01.2B-03E	RO8		1.032	0.078	Band	Yes
FW-01 .1 B BFP 32 toRCIRC T	FW-01.2B-05T	N/A	RO8		1.036	0.036	T DAT	No (1)
FW-01 .1 B BFP 32 toRCIRC T	FW-01.2B-05T	U/S Main	RO8		1.036	0.043	Band	No (1)
FW-01 .1 B BFP 32 toRCIRC T	FW-01.2B-05T	D/S Main	RO8		1.036	0.024	Band	No (1)
FW-01 .2A BFP31RCIRC T to HDR	FW-01 .2A-04P	Main	RO8		1.039	0.059	T DAT	Yes
FW-01 .2A BFP31RCIRC T to HDR	FW-01 .2A-23P	Main	RO8		1.053	0.078	T DAT	Yes
FW-01 .2B BFP32RCIRC T to HDR	FW-01 .2B-06P	N/A	RO8		1.057	0.053	T DAT	No (13)

CHECWORKS Line Name	Component Name	Component Section	Period	Report Number	Tinit orTnom (in.)	Wear (in.)	Method	In LCF Calc (Yes/No)
FW-01 .2B BFP32RCIRC T to HDR	FW-01 .2B-06P	Entered as D/S Ext. ofFW-01 .2B-05T	RO8		1.057	0.043	Band	No (1)
FW-01 .2B BFP32RCIRC T to HDR	FW-01.2B-27R	U/S Main	RO10	99UT271	1.031	0.100	Band	Yes
FW-01 .2B BFP32RCIRC T to HDR	FW-01.2B-27R	D/S Main	RO10	99UT271	1.260	0.113	Band	Yes
FW-01 .2B BFP32RCIRC T to HDR	FW-01 .2B-27R	U/S Ext.	RO10	99UT271	1.031	0.062	Band	No (2)
FW-01 .2B BFP32RCIRC T to HDR	FW-01 .2B-27R	D/S Main	RO8		1.031	0.096	T DAT	No (17)
FW-01.3 BFPDISCHARGE HDR	FW-01.3-01T	U/S Main	RO10	99UT271	1.375	0.047	Band	No (1)
FW-01.3 BFPDISCHARGE HDR	FW-01.3-01T	D/S Main	RO10	99UT271	1.375	0.026	Band	No (1)
FW-01.3 BFPDISCHARGE HDR	FW-01.3-01T	Branch	RO10	99UT271	1.042	0.095	Band	Yes
FW-01.3 BFPDISCHARGE HDR	FW-01.3-01T	Br. Ext.	RO10	99UT271	1.053	0.052	Band	No (2)
FW-01.3 BFPDISCHARGE HDR	FW-01.3-01T	N/A	RO8		1.375	0.036	T DAT	No (1)

CHECWORKS Line Name	Component Name	Component Section	Period	Report Number	Tinit orTnom (in.)	Wear (in.)	Method	In LCF Calc (Yes/No)
FW-01.3 BFPDISCHARGE HDR	FW-01.3-01T	N/A	RO8		1.042	0.089	T DAT	No (13)
FW-01.3 BFPDISCHARGE HDR	FW-01.3-01T	U/S Main	RO8		1.375	0.061	Band	No (1)
FW-01.3 BFPDISCHARGE HDR	FW-01.3-01T	D/S Main	RO8		1.375	0.069	Band	Yes
FW-01.3 BFPDISCHARGE HDR	FW-01.3-01T	Branch	RO8		1.042	0.091	Band	Yes
FW-01.3 BFPDISCHARGE HDR	FW-01.3-01T	Br. Ext.	RO8		1.053	0.061	Band	No (2)
FW-01.3 BFPDISCHARGE HDR	FW-01.3-01T	U/S Ext.	RO8		1.375	0.145	Band	No (2)
FW-01 .3 BFPDISCHARGE HDR	FW-01.3-02P	Entered as D/S Ext. ofFW-01.3-01T	RO10	99UT271	1.371	0.035	Band	No (1)
FW-01.3 BFPDISCHARGE HDR	FW-01.3-02P	N/A	RO8		1.371	0.029	T DAT	No (1)
FW-01 .3 BFPDISCHARGE HDR	FW-01.3-02P	Entered as D/S Ext. ofFW-01.3-01T	RO8		1.371	0.061	Band	Yes
FW-01.3 BFPDISCHARGE HDR	FW-01.3-03E	N/A	RO8		1.514	0.204	T DAT	No (13)

CHECWORKS Line Name	Component Name	Component Section	Period	Report Number	Tinit orTnom (in.)	Wear (in.)	Method	In LCF Calc (Yes/No)
FW-01.3 BFPDISCHARGE HDR	FW-01.3-03E	Main	RO8		1.514	0.185	Blanket	Yes
FW-01.3 BFPDISCHARGE HDR	FW-01.3-04E	Main	RO8		1.638	0.225	Blanket	Yes
FW-01 .3 BFPDISCHARGE HDR	FW-01 .3-05P	Entered as U/S Ext. ofFW-01 .3-06E	RO9		1.260	0.084	Band	No (2)
FW-01.3 BFPDISCHARGE HDR	FW-01.3-06E	Main	RO9		1.260	0.233	Blanket	Yes
FW-01 .3 BFPDISCHARGE HDR	FW-01.3-07P	Entered as D/S Ext. ofFW-01.3-06E	RO9		1.260	0.068	Band	Yes
FW-01.3 BFPDISCHARGE HDR	FW-01.3-08E	Main	RO9		1.260	0.242	Blanket	Yes
FW-01 .3 BFPDISCHARGE HDR	FW-01.3-09P	Entered as the U/S Extof FW-01.3-10E	RO12	03UT112	1.260	0.026	Band	No(1)
FW-01 .3 BFPDISCHARGE HDR	FW-01.3-09P	Entered as D/S Ext. ofFW-01.3-08E	RO9		1.260	0.082	Band	Yes
FW-01.3 BFPDISCHARGE HDR	FW-01.3-10E	Main	RO12	03UT112	1.260	0.210	Blanket	Yes
FW-01 .3 BFPDISCHARGE HDR	FW-01.3-11P	Entered as the D/S Extof FW-01.3-10E	RO12	03UT112	1.260	0.034	Band	No(1)

CHECWORKS Line Name	Component Name	Component Section	Period	Report Number	Tinit orTnom (in.)	Wear (in.)	Method	In LCF Calc (Yes/No)
FW-01 .3 BFPDISCHARGE HDR	FW-01.3-11P	Entered as US Ext ofFW-01.3-12E	RO13	05UT094	1.260	0.043	Band	No(1)
FW-01.3 BFPDISCHARGE HDR	FW-01.3-12E	Main	RO13	05UT094	1.260	0.227	Blanket	Yes
FW-01 .3 BFPDISCHARGE HDR	FW-01.3-13P	Entered as DS Ext ofFW-01.3-12E	RO13	05UT094	1.260	0.084	Band	Yes
FW-01.3 BFPDISCHARGE HDR	FW-01.3-15E	Main	RO11	01UT127	1.260	0.216	Blanket	Yes
FW-01 .3 BFPDISCHARGE HDR	FW-01.3-16P	Entered as D/S Ext. ofFW-01.3-15E	RO11	01UT127	1.260	0.064	Band	Yes
FW-01.3 BFPDISCHARGE HDR	FW-01.3-17T	US Main	RO13	05UT050	1.260	0.044	Band	Yes
FW-01.3 BFPDISCHARGE HDR	FW-01.3-17T	DS Main	RO13	05UT050	1.260	0.047	Band	Yes
FW-01.3 BFPDISCHARGE HDR	FW-01.3-17T	Branch	RO13	05UT050	0.938	0.122	Band	Yes
FW-01 .3 BFPDISCHARGE HDR	FW-01.3-18P	Entered as DS Ext ofFW-01.3-17T	RO13	05UT050	1.348	0.030	Band	No(2)
FW-01.3 BFPDISCHARGE HDR	FW-01.3-18P	N/A	RO8		1.348	0.061	T DAT	No (1)

CHECWORKS Line Name	Component Name	Component Section	Period	Report Number	Tinit orTnom (in.)	Wear (in.)	Method	In LCF Calc (Yes/No)
FW-01 .3 BFPDISCHARGE HDR	FW-01.3-18P	Entered as U/S Ext. ofFW-01.4-01T	RO8		1.348	0.028	Band	No (1)
FW-01 .3 BFPDISCHARGE HDR	FW-01.3-18P	Entered as U/S Ext. ofFW-01.4-01T	RO9		1.348	0.054	Band	No (1)
FW-01.3 BFPDISCHARGE HDR	FW-01.4-01T	N/A	RO8		1.351	0.074	T DAT	No (13)
FW-01.3 BFPDISCHARGE HDR	FW-01.4-01T	N/A	RO8		1.019	0.209	T DAT	No (13)
FW-01.3 BFPDISCHARGE HDR	FW-01.4-01T	U/S Main	RO8		1.351	0.028	Band	No (1)
FW-01.3 BFPDISCHARGE HDR	FW-01.4-01T	D/S Main	RO8		1.351	0.032	Band	No (1)
FW-01.3 BFPDISCHARGE HDR	FW-01.4-01T	Branch	RO8		1.019	0.210	Band	Yes
FW-01.3 BFPDISCHARGE HDR	FW-01.4-01T	U/S Main	RO9		1.351	0.042	Band	No (1)
FW-01.3 BFPDISCHARGE HDR	FW-01.4-01T	D/S Main	RO9		1.351	0.057	Band	No (1)
FW-01.3 BFPDISCHARGE HDR	FW-01.4-01T	Branch	RO9		1.019	0.227	Band	Yes

CHECWORKS Line Name	Component Name	Component Section	Period	Report Number	Tinit orTnom (in.)	Wear (in.)	Method	In LCF Calc (Yes/No)
FW-01 .4 BFPDISCHARGE HDR	FW-01.4-02P	Entered as U/S Ext. ofFW-01.5-01T	RO11	01UT126	1.341	0.051	Band	No (2)
FW-01.4 BFPDISCHARGE HDR	FW-01.4-02P	N/A	RO8		1.341	0.064	T DAT	No (13)
FW-01 .4 BFPDISCHARGE HDR	FW-01.4-02P	Entered as D/S Ext. ofFW-01.4-01T	RO8		1.341	0.039	Band	No (1)
FW-01 .4 BFPDISCHARGE HDR	FW-01.4-02P	Entered as D/S Ext. ofFW-01.4-01T	RO9		1.341	0.060	Band	No (1)
FW-01.4 BFPDISCHARGE HDR	FW-01.5-01T	U/S Main	RO11	01UT126	1.385	0.059	Band	Yes
FW-01.4 BFPDISCHARGE HDR	FW-01.5-01T	D/S Main	RO11	01UT126	1.385	0.045	Band	Yes
FW-01.4 BFPDISCHARGE HDR	FW-01.5-01T	Branch	RO11	01UT126	1.015	0.190	Band	Yes
FW-01.4 BFPDISCHARGE HDR	FW-01.5-01T	U/S Main	RO8		1.385	0.074	T DAT	Yes
FW-01.4 BFPDISCHARGE HDR	FW-01.5-01T	Branch	RO8		1.015	0.189	T DAT	Yes
FW-01 .6A BFP HDRto FWH 36A	FW-01.6A-01R	U/S Main	RO11	01UT126	1.260	0.152	Band	Yes

CHECWORKS Line Name	Component Name	Component Section	Period	Report Number	Tinit orTnom (in.)	Wear (in.)	Method	In LCF Calc (Yes/No)
FW-01 .6A BFP HDRto FWH 36A	FW-01 .6A-01 R	D/S Main	RO11	01 UT1 26	0.938	0.396	Band	No (3)
FW-01 .6A BFP HDRto FWH 36A	FW-01 .6A-01 R	N/A	RO8		1.260	0.906	T DAT	No (3)
FW-01 .6A BFP HDRto FWH 36A	FW-01.6A-02P	Entered as D/S Ext. ofFW-01.6A-01R	RO11	01UT126	1.009	0.059	Band	Yes
FW-01 .6A BFP HDRto FWH 36A	FW-01 .6A-02P	Entered as D/S Ext. ofFW-01 .6A-01 R	RO8		1.009	0.096	T DAT	Yes
FW-01.6B BFP HDRto FWH 36B	FW-01.6B-02P	Main	RO11	01UT129	0.930	0.075	Band	Yes
FW-01.6B BFP HDRto FWH 36B	FW-01 .6B-02P	Main	RO8		0.930	0.088	T DAT	Yes
FW-01.6B BFP HDRto FWH 36B	FW-01.6B-06E	Main	RO12	03UT123	0.938	0.155	Blanket	Yes
FW-01 .6B BFP HDRto FWH 36B	FW-01.6B-07P	Entered as the D/S Extof FW-01.6B-06E	RO12	03UT123	0.938	0.085	Band	Yes
FW-01.6B BFP HDRto FWH 36B	FW-01.6B-08E	Main	RO12	03UT123	0.938	0.100	Blanket	Yes
FW-01.6B BFP HDRto FWH 36B	FW-01.6B-10N	Main	RO12	03UT123	0.938	0.087	Band	Yes
FW-01 .6C BFP HDRto FWH 36C	FW-01 .6C-02P	Main	RO8		0.938	0.086		Yes
FW-01 .6C BFP HDRto FWH 36C	FW-01.6C-02P	Entered as Br Ext. ofFW-01.4-01T	RO8		0.938	0.043	Band	No (1)
FW-01 .6C BFP HDRto FWH 36C	FW-01.6C-02P	Entered as Br Ext. ofFW-01.4-01T	RO9		0.938	0.058	Band	No (2)
FW-02.1A FWH 36A toSG HDR	FW-02.1A-11E	Main	RO10	99UT247	0.938	0.125	Blanket	Yes

CHECWORKS Line Name	Component Name	Component Section	Period	Report Number	Tinit orTnom (in.)	Wear (in.)	Method	In LCF Calc (Yes/No)
FW-02.1A FWH 36A toSG HDR	FW-02.1A-11E	U/S Ext.	RO10	99UT247	0.938	0.204	Band	No (2)
FW-02.1A FWH 36A toSG HDR	FW-02.1A-12P	Entered as D/S Ext. ofFW-02.1A-11E	RO10	99UT247	0.938	0.119	Band	Yes
FW-02.1A FWH 36A toSG HDR	FW-02.1A-13R	U/S Main	RO10	99UT270	0.938	0.108	Band	Yes
FW-02.1A FWH 36A toSG HDR	FW-02.1A-13R	D/S Main	RO10	99UT270	1.260	0.152	Band	Yes
FW-02.1A FWH 36A toSG HDR	FW-02.1A-13R	D/S Main	RO8		1.260	0.151	T DAT	No (17)
FW-02.1B FWH 36B toSG HDR	FW-02.1B-01N	Main	RO12	03UT102	0.938	0.041	Band	No(1)
FW-02.1B FWH 36B toSG HDR	FW-02.1B-02E	Main	RO12	03UT102	0.938	0.283	Blanket	Yes
FW-02.1 B FWH 36B toSG HDR	FW-02.1B-03P	Entered as the D/S Extof FW-02.1B-02E	RO12	03UT102	0.938	0.061	Band	Yes
FW-02.1B FWH 36B toSG HDR	FW-02.1B-04E	Main	RO12	03UT102	0.938	0.249	Blanket	Yes
FW-02.1 B FWH 36B toSG HDR	FW-02.1B-06P	Entered as the D/S Extof FW-02.1B-05V	RO12	03UT102	0.938	0.112	Band	Yes
FW-02.1B FWH 36B toSG HDR	FW-02.1B-10P	Main	RO8		0.965	0.125	T DAT	Yes
FW-02.1C FWH 36Cto SG HDR	FW-02.1C-01N	Main	RO13	05UT052	0.938	0.156	Band	Yes
FW-02.1C FWH 36Cto SG HDR	FW-02.1C-02E	Main	RO13	05UT052	0.938	0.280	Blanket	Yes
FW-02.1C FWH 36Cto SG HDR	FW-02.1C-03P	Main	RO13	05UT052	0.938	0.050	Band	Yes

CHECWORKS Line Name	Component Name	Component Section	Period	Report Number	Tinit orTnom (in.)	Wear (in.)	Method	In LCF Calc (Yes/No)
FW-02.1C FWH 36Cto SG HDR	FW-02.1C-10P	Main	RO8		0.998	0.091	T DAT	Yes
FW-02.3 SG INLETHEADER	FW-02.1B-11T	U/S Main	RO10	99UT270	1.398	0.030	Band	No (1)
FW-02.3 SG INLETHEADER	FW-02.1B-11T	D/S Main	RO10	99UT270	1.398	0.035	Band	No (1)
FW-02.3 SG INLETHEADER	FW-02.1B-11T	Branch	RO10	99UT270	0.974	0.071	Band	Yes
FW-02.3 SG INLETHEADER	FW-02.1B-11T	D/S Ext.	RO10	99UT270	1.380	0.038	Band	No (1)
FW-02.3 SG INLETHEADER	FW-02.1B-11T	Br. Ext.	RO10	99UT270	0.965	0.098	Band	No (2)
FW-02.3 SG INLETHEADER	FW-02.1B-11T	U/S Main	RO8		1.398	0.071	T DAT	Yes
FW-02.3 SG INLETHEADER	FW-02.1B-11T	Branch	RO8		0.974	0.059	T DAT	Yes
FW-02.3 SG INLETHEADER	FW-02.3-01P	N/A	RO8		1.380	0.055	T DAT	No (1)
FW-02.4 SG INLETHEADER	FW-02.1C-11T	N/A	RO8		1.375	0.041	T DAT	No (1)
FW-02.4 SG INLETHEADER	FW-02.1C-11T	Branch	RO8		0.975	0.066	T DAT	No (17)
FW-02.4 SG INLETHEADER	FW-02.4-01P	N/A	RO8		1.359	0.051	T DAT	No (14)
FW-02.4 SG INLETHEADER	FW-02.4-02T	US Main	RO13	05UT071	1.260	0.053	Band	Yes
FW-02.4 SG INLETHEADER	FW-02.4-02T	DS Main	RO13	05UT071	1.260	0.043	Band	Yes

CHECWORKS Line Name	Component Name	Component Section	Period	Report Number	Tinit orTnom (in.)	Wear (in.)	Method	In LCF Calc (Yes/No)
FW-02.4 SG INLETHEADER	FW-02.4-02T	Branch	RO13	05UT071	0.944	0.110	Band	Yes
FW-02.4 SG INLETHEADER	FW-02.4-04E	Main	RO9		1.260	0.091	Blanket	Yes
FW-02.4 SG INLETHEADER	FW-02.4-05E	Main	RO9		1.260	0.238	Blanket	Yes
FW-02.4 SG INLETHEADER	FW-02.4-06P	Entered as D/S Ext. ofFW-02.4-05E	RO9		1.260	0.069	Band	Yes
FW-02.4 SG INLETHEADER	FW-02.4-14P	Entered as the U/S Extof FW-02.4-15E	RO12	03UT081	1.260	0.014	Band	No(1,2)
FW-02.4 SG INLETHEADER	FW-02.4-15E	Main	RO12	03UT081	1.260	0.212	Blanket	Yes
FW-02.4 SG INLETHEADER	FW-02.4-16P	Entered as the D/S Extof FW-02.4-15E	RO12	03UT081	1.260	0.044	Band	No(1)
FW-02.4 SG INLETHEADER	FW-02.4-16P	Entered as US Ext ofFW-02.4-17E	RO13	05UT057	1.260	0.173	Band	No(1)
FW-02.4 SG INLETHEADER	FW-02.4-17E	Main	RO13	05UT057	1.260	0.145	Blanket	Yes
FW-02.4 SG INLETHEADER	FW-02.4-18P	Entered as DS Ext ofFW-02.4-17E	RO13	05UT057	1.365	0.040	Band	Yes
FW-02.4 SG INLETHEADER	FW-02.4-18P	N/A	RO8		1.365	0.027	T DAT	No (1)
FW-02.4 SG INLETHEADER	FW-02.4-19T	U/S Main	RO10	99UT269	1.368	0.022	Band	No (1)
FW-02.4 SG INLETHEADER	FW-02.4-19T	D/S Main	RO10	99UT269	1.368	0.033	Band	No (1)
FW-02.4 SG INLETHEADER	FW-02.4-19T	Branch	RO10	99UT269	0.974	0.145	Band	Yes

CHECWORKS Line Name	Component Name	Component Section	Period	Report Number	Tinit orTnom (in.)	Wear (in.)	Method	In LCF Calc (Yes/No)
FW-02.4 SG INLETHEADER	FW-02.4-19T	U/S Ext.	RO10	99UT269	1.365	0.022	Band	No (2)
FW-02.4 SG INLETHEADER	FW-02.4-19T	Br. Ext.	RO10	99UT269	0.968	0.096	Band	No (2)
FW-02.4 SG INLETHEADER	FW-02.4-19T	N/A	RO8		1.368	0.026	T DAT	No (1)
FW-02.4 SG INLETHEADER	FW-02.4-19T	Branch	RO8		0.974	0.131	T DAT	Yes
FW-02.5 SG INLETHEADER	FW-02.5-01T	U/S Main	RO10	99UT269	1.372	0.036	Band	No (1)
FW-02.5 SG INLETHEADER	FW-02.5-01T	D/S Main	RO10	99UT269	1.372	0.036	Band	No (1)
FW-02.5 SG INLETHEADER	FW-02.5-01T	Branch	RO10	99UT269	0.432	0.048	Blanket	No (4)
FW-02.5 SG INLETHEADER	FW-02.5-04T	U/S Main	RO12	03UT096	1.368	0.032	Band	No(1)
FW-02.5 SG INLETHEADER	FW-02.5-04T	D/S Main	RO12	03UT096	1.368	0.021	Band	No(1)
FW-02.5 SG INLETHEADER	FW-02.5-04T	Branch	RO12	03UT096	1.002	0.086	Band	Yes
FW-02.5 SG INLETHEADER	FW-02.5-04T	N/A	RO8		1.368	0.041	T DAT	No (1)
FW-02.5 SG INLETHEADER	FW-02.5-04T	Branch	RO8		1.002	0.075	T DAT	No (17)
FW-02.5 SG INLETHEADER	FW-02.5-05P	N/A	RO8		1.372	0.034	T DAT	No (14)
FW-02.5 SG INLETHEADER	FW-02.5-06P	N/A	RO8		1.365	0.030	T DAT	No (1)

CHECWORKS Line Name	Component Name	Component Section	Period	Report Number	Tinit orTnom (in.)	Wear (in.)	Method	In LCF Calc (Yes/No)
FW-02.6 SG INLETHEADER	FW-02.6-01P	N/A	RO8		1.361	0.019	T DAT	No (1)
FW-02.6 SG INLETHEADER	FW-02.6-03T	N/A	RO8		1.361	0.030	T DAT	No (1)
FW-02.6 SG INLETHEADER	FW-02.6-03T	Branch	RO8		1.006	0.139	T DAT	No (17)
FW-02.8A SG HDR toSG 31	FW-02.8A-01P	Entered as the U/S Extof FW-02.8A-02E	RO12	03UT135	0.938	0.052	Band	No(2)
FW-02.8A SG HDR toSG 31	FW-02.8A-01 P	Main	RO8		0.968	0.097	T DAT	Yes
FW-02.8A SG HDR toSG 31	FW-02.8A-02E	Main	RO12	03UT135	0.938	0.129	Blanket	Yes
FW-02.8A SG HDR toSG 31	FW-02.8A-03T	U/S Main	RO12	03UT135	0.938	0.075	Band	Yes
FW-02.8A SG HDR toSG 31	FW-02.8A-03T	D/S Main	RO12	03UT135	0.938	0.056	Band	Yes
FW-02.8A SG HDR toSG 31	FW-02.8A-06E	Main	RO12	03UT135	0.938	0.158	Blanket	Yes
FW-02.8A SG HDR toSG 31	FW-02.8A-07P	Entered as the D/S Extof FW-02.8A-06E	RO12	03UT135	0.938	0.058	Band	Yes
FW-02.8A SG HDR toSG 31	FW-02.8A-25R	U/S Main	RO12	03UT135	0.938	0.421	Band	No(3)
FW-02.8A SG HDR toSG 31	FW-02.8A-25R	D/S Main	RO12	03UT135	1.312	0.476	Band	No(3)
FW-02.8A SG HDR toSG 31	FW-02.8A-26R	U/S Main	RO12	03UT135	1.312	0.615	Band	No(3)
FW-02.8A SG HDR toSG 31	FW-02.8A-26R	D/S Main	RO12	03UT135	0.938	0.271	Band	Yes

CHECWORKS Line Name	Component Name	Component Section	Period	Report Number	Tinit orTnom (in.)	Wear (in.)	Method	In LCF Calc (Yes/No)
FW-02.8A SG HDR toSG 31	FW-03.1A-08B	Main	RO9		0.750	0.172	Blanket	Yes
FW-02.8A SG HDR toSG 31	FW-03.1A-09N	Main	RO9		0.750	0.120	Band	No (11)
FW-02.8B SG HDR toSG 32	FW-02.8B-01P	Entered as the Br Extof FW-02.5-04T	RO12	03UT096	0.944	0.064	Band	No(1)
FW-02.8B SG HDR toSG 32	FW-02.8B-01 P	Main	RO8		0.938	0.078	T DAT	Yes
FW-02.8B SG HDR toSG 32	FW-02.8B-07E	Main	RO9		0.938	0.188	Blanket	Yes
FW-02.8B SG HDR toSG 32	FW-02.8B-08P	Entered as D/S Ext. ofFW-02.8B-07E	RO9		0.938	0.069	Band	Yes
FW-02.8B SG HDR toSG 32	FW-02.8B-09T	U/S Main	RO12	03UT058	0.938	0.060	Band	Yes
FW-02.8B SG HDR toSG 32	FW-02.8B-09T	D/S Main	RO12	03UT058	0.938	0.041	Band	Yes
FW-02.8B SG HDR toSG 32	FW-02.8B-09T	Br. Ext	RO12	03UT058	0.432	0.049	Band	No (2)
FW-02.8B SG HDR toSG 32	FW-02.8B-12P_2	Entered as U/S Ext. ofFW-02.8B-13F	RO10	99UT232	0.938	0.125	Point toPoint	No (2)
FW-02.8B SG HDR toSG 32	FW-02.8B-12P_2	Entered as U/S Ext. ofFW-02.8B-13F	RO8		0.938	0.078	Band	No (2)
FW-02.8B SG HDR toSG 32	FW-02.8B-12P_2	Entered as U/S Ext. ofFW-02.8B-13F	RO9		0.938	0.085	Band	No (2)
FW-02.8B SG HDR toSG 32	FW-02.8B-13F	Main	RO10	99UT232	0.938	0.222	Point toPoint	Yes
FW-02.8B SG HDR toSG 32	FW-02.8B-13F	Main	RO8		0.938	0.167	Band	Yes

CHECWORKS Line Name	Component Name	Component Section	Period	Report Number	Tinit orTnom (in.)	Wear (in.)	Method	In LCF Calc (Yes/No)
FW-02.8B SG HDR toSG 32	FW-02.8B-13F	Main	RO9		0.938	0.175	Band	Yes
FW-02.8B SG HDR toSG 32	FW-02.8B-14P	Entered as D/S Ext. ofFW-02.8B-13F	RO10	99UT232	0.990	0.103	Band	Yes
FW-02.8B SG HDR toSG 32	FW-02.8B-14P	Entered as D/S Ext. ofFW-02.8B-13F	RO8		0.990	0.093	Band	Yes
FW-02.8B SG HDR toSG 32	FW-02.8B-14P	Entered as D/S Ext. ofFW-02.8B-13F	RO9		0.990	0.109	Band	Yes
FW-02.8B SG HDR toSG 32	FW-02.8B-22T	U/S Main	RO8		0.750	0.039	Band	Yes
FW-02.8B SG HDR toSG 32	FW-02.8B-22T	D/S Main	RO8		0.750	0.059	Band	Yes
FW-02.8B SG HDR toSG 32	FW-02.8B-23E	Main	RO8		0.924	0.176	Blanket	Yes
FW-02.8B SG HDR toSG 32	FW-02.8B-25R	US Main	RO13	05UT045	0.938	0.352	Band	N(4)
FW-02.8B SG HDR toSG 32	FW-02.8B-25R	DS Main	RO13	05UT045	0.844	0.447	Band	N(4)
FW-02.8B SG HDR toSG 32	FW-02.8B-26R	U/S Main	RO9		0.938	0.238	Band	Yes
FW-02.8B SG HDR toSG 32	FW-02.8B-26R	D/S Main	RO9		0.844	0.256	Band	Yes
FW-02.8B SG HDR toSG 32	FW-03.1B-07B	Entered as U/S Ext ofFW-03.1B-08E	RO13	05UT054	0.750	0.065	Band	No(1)
FW-02.8B SG HDR toSG 32	FW-03.1B-08E	Main	RO13	05UT054	0.750	0.099	Blanket	Yes
FW-02.8B SG HDR toSG 32	FW-03.1B-09P	Entered as D/S Ext ofFW-03.1B-08E	RO13	05UT054	0.750	0.068	Band	Yes

CHECWORKS Line Name	Component Name	Component Section	Period	Report Number	Tinit orTnom (in.)	Wear (in.)	Method	In LCF Calc (Yes/No)
FW-02.8C SG HDR toSG 34	FW-02.8C-01 P	Main	RO8		0.946	0.071	T DAT	Yes
FW-02.8C SG HDR toSG 34	FW-02.8C-05V	Main	RO11	01 UT1 20	0.938	N/A	x	No (12)
FW-02.8C SG HDR toSG 34	FW-02.8C-06V	Main	RO11	01 UT1 20	1.312	N/A	x	No (12)
FW-02.8C SG HDR toSG 34	FW-02.8C-07E	Main	RO11	01UT120	0.938	0.121	Blanket	Yes
FW-02.8C SG HDR toSG 34	FW-02.8C-08P	Entered as D/S Ext. ofFW-02.8C-07E	RO11	01 UT1 20	0.938	0.053	Band	Yes
FW-02.8C SG HDR toSG 34	FW-02.8C-24R	U/S Main	RO11	01 UT1 20	0.938	0.247	Band	Yes
FW-02.8C SG HDR toSG 34	FW-02.8C-24R	D/S Main	RO11	01 UT1 20	0.844	0.148	Band	Yes
FW-02.8C SG HDR toSG 34	FW-02.8C-25R	U/S Main	RO11	01 UT1 20	0.844	0.087	Band	Yes
FW-02.8C SG HDR toSG 34	FW-02.8C-25R	D/S Main	RO11	01 UT1 20	0.938	0.151	Band	Yes
FW-02.8C SG HDR toSG 34	FW-03.1C-10E	Main	RO12	03UT126	0.750	0.215	Blanket	Yes
FW-02.8C SG HDR toSG 34	FW-03.1C-11P	Entered as the D/S Extof FW-03.1C-10E	RO12	03UT126	0.750	0.041	Band	Yes
FW-02.8C SG HDR toSG 34	FW-03.1C-12E	Main	RO12	03UT126	0.750	0.166	Blanket	Yes
FW-02.8C SG HDR toSG 34	FW-03.1C-13P	Entered as the D/S Extof FW-03.1C-12E	RO12	03UT126	0.750	0.086	Band	Yes
FW-02.8C SG HDR toSG 34	FW-03.1C-14E	Main	RO12	03UT126	0.750	0.273	Blanket	Yes

CHECWORKS Line Name	Component Name	Component Section	Period	Report Number	Tinit orTnom (in.)	Wear (in.)	Method	In LCF Calc (Yes/No)
FW-02.8C SG HDR toSG 34	FW-03.1C-15N	Main	RO12	03UT126	0.750	0.110	Band	No(11)
FW-02.8D SG HDR toSG 33	FW-02.7-01 P	N/A	RO8		1.372	0.034	T DAT	No (1)
FW-02.8D SG HDR toSG 33	FW-02.7-03P	N/A	RO8		1.372	0.041	T DAT	No (1)
FW-02.8D SG HDR toSG 33	FW-02.7-04T	N/A	RO8		1.395	0.053	T DAT	No (1)
FW-02.8D SG HDR toSG 33	FW-02.7-04T	Branch	RO8		1.013	0.153	T DAT	No (17)
FW-02.8D SG HDR toSG 33	FW-02.8D-01 P	Main	RO8		0.964	0.052	T DAT	Yes
FW-02.8D SG HDR toSG 33	FW-02.8D-24R	US Main	RO13	05UT049	0.938	0.159	Band	N(4)
FW-02.8D SG HDR toSG 33	FW-02.8D-24R	DS Main	RO13	05UT049	0.844	0.414	Band	N(4)
FW-02.8D SG HDR toSG 33	FW-02.8D-25R	US Main	RO13	05UT049	0.844	0.237	Band	Yes
FW-02.8D SG HDR toSG 33	FW-02.8D-25R	DS Main	RO13	05UT049	0.938	0.175	Band	Yes
FW-04.1A BFP 31RECIRC	FW-04.1A-01E	Main	RO8		0.954	0.180	T DAT	No (11)
FW-04.1A BFP 31RECIRC	FW-04.1A-09P	Main	RO8		0.896	0.046	T DAT	No (11)
FW-04.1A BFP 31RECIRC	FW-04.1A-10P	Main	RO8		0.864	0.098	T DAT	No (11)
FW-04.1A BFP 31RECIRC	FW-04.2A-01R	U/S Main	RO8		0.864	0.290	T DAT	No (11)

CHECWORKS Line Name	Component Name	Component Section	Period	Report Number	Tinit orTnom (in.)	Wear (in.)	Method	In LCF Calc (Yes/No)
FW-04.1A BFP 31RECIRC	FW-04.2A-02P	Main	RO8		0.709	0.065	T DAT	No (11)
FW-04.1A BFP 31RECIRC	FW-04.2A-21P	Main	RO8		0.700	0.045	Band	No (11)
FW-04.1A BFP 31RECIRC	FW-04.2A-22B	Main	RO8		0.782	0.172	Blanket	No (11)
FW-04.1A BFP 31RECIRC	FW-04.2A-23P	Entered as D/S Ext. ofFW-04.2A-22B	RO8		0.724	0.086	Band	No (11)
FW-04.1A BFP 31RECIRC	FW-05.1A-02P	Main	RO8		0.886	0.064	T DAT	No (11)
FW-04. 1 B BFP 32RECIRC	FW-04.1B-01E	Main	RO11	01UT064	0.979	0.228	Blanket	No (11)
FW-04. 1 B BFP 32RECIRC	FW-04.1B-01E	Main	RO8		0.979	0.186	T DAT	No (11)
FW-04. 1 B BFP 32RECIRC	FW-04.1B-01E	Main	RO8		0.979	0.224	Blanket	No (11)
FW-04. 1 B BFP 32RECIRC	FW-04.1B-02P	Entered as D/S Ext. ofFW-04.1B-01E	RO11	01UT064	0.912	0.041	Band	No (11)
FW-04. 1 B BFP 32RECIRC	FW-04.1B-02P	Entered as D/S Ext. ofFW-04.1B-01E	RO8		0.912	0.058	Band	No (11)
FW-04. 1 B BFP 32RECIRC	FW-04.1B-03E	Main	RO11	01UT064	1.083	0.266	Blanket	No (11)
FW-04. 1 B BFP 32RECIRC	FW-04.1B-03E	Main	RO8		1.083	0.113	Blanket	No (11)
FW-04. 1 B BFP 32RECIRC	FW-04.1B-04P	Entered as D/S Ext. ofFW-04.1B-03E	RO11	01UT064	0.864	0.131	Band	No (11)
FW-04. 1 B BFP 32RECIRC	FW-04.1B-10P	Entered as U/S Ext. ofFW-04.1B-01E	RO11	01UT064	0.864	0.090	Band	No (11)

CHECWORKS Line Name	Component Name	Component Section	Period	Report Number	Tinit orTnom (in.)	Wear (in.)	Method	In LCF Calc (Yes/No)
FW-04. 1 B BFP 32RECIRC	FW-04.1B-10P	N/A	RO8		0.864	0.093	T DAT	No (11)
FW-04. 1 B BFP 32RECIRC	FW-04.1B-10P	Entered as U/S Ext. ofFW-04.1B-01E	RO8		0.864	0.093	Band	No (11)
FW-04. 1 B BFP 32RECIRC	FW-04.2B-22P	Entered as U/S Ext. ofFW-04.2B-23R	RO8		0.716	0.065	Band	No (11)
FW-04. 1 B BFP 32RECIRC	FW-04.2B-23R	D/S Main	RO 8		0.962	0.123	Band	No (11)
FW-04. 1 B BFP 32RECIRC	FW-04.2B-23R	U/S Main	RO 8		0.674	0.082	Band	No (11)
FW-04. 1 B BFP 32RECIRC	FW-05.1B-02P	Main	RO 8		0.864	0.079	T DAT	No (11)
HD-01.1A FWH 36A toHD TK	HD-01.1A-08P	Entered as U/S ext ofHD-01.1A-09E	RO 12	03UT069	0.307	0.033	Band	Yes
HD-01.1A FWH 36A toHD TK	HD-01.1A-09E	Main	RO 12	03UT069	0.307	0.082	Blanket	Yes
HD-01.1A FWH 36A toHD TK	HD-01.2A-01R	D/S Main	RO 12	03UT069	0.280	0.122	Band	Yes
HD-01.1A FWH 36A toHD TK	HD-01.2A-01R	U/S Main	RO 12	03UT069	0.307	0.066	Band	Yes
HD-01.1A FWH 36A toHD TK	HD-02.1A-02R	D/S Main	RO 12	03UT069	0.365	0.086	Band	Yes
HD-01.1A FWH 36A toHD TK	HD-02.1A-02R	U/S Main	RO 12	03UT069	0.280	0.073	Band	Yes
HD-01.1A FWH 36A toHD TK	HD-02.2A-02N	Main	RO 12	03UT069	0.365	0.110	Band	Yes
HD-01 .1 B FWH 36B toHD TK	HD-01.1B-06P		RO 9		0.307	0.036	Band	No (2)

CHECWORKS Line Name	Component Name	Component Section	Period	Report Number	Tinit orTnom (in.)	Wear (in.)	Method	In LCF Calc (Yes/No)
HD-01 .1 B FWH 36B toHD TK	HD-01.1B-07E		RO 9		0.307	0.061	Blanket	Yes
HD-01 .1 B FWH 36B toHD TK	HD-01 .2B-01 R		RO 9		0.307	0.046	Band	Yes
HD-01 .1 B FWH 36B toHD TK	HD-01 .2B-01 R		RO 9		0.280	0.062	Band	Yes
HD-01 .1 B FWH 36B toHD TK	HD-02.1B-01V		RO 9		0.280	0.036	Blanket	No (10)
HD-01 .1C FWH 36C toHD TK	HD-01.1C-10P;		RO 11	01UT134	0.307	0.063	Band	No (2)
HD-01 .1C FWH 36C toHD TK	HD-01.1C-11E		RO 11	01UT134	0.421	0.131	Blanket	Yes
HD-01.1C FWH 36C toHD TK	HD-01.1C-11E					0.119	T DAT	Yes
HD-01 .1C FWH 36C toHD TK	HD-01.2C-01R		RO11	01UT134	0.307	0.064	Band	Yes
HD-01 .1C FWH 36C toHD TK	HD-01.2C-01R		RO11	01UT134	0.280	0.071	Band	Yes
HD-01 .1C FWH 36C toHD TK	HD-02.1C-02R		RO11	01UT134	0.280	0.040	Band	No(3)
HD-01 .1C FWH 36C toHD TK	HD-02.1C-02R		RO11	01UT134	0.365	0.060	Band	Yes
HD-01 .1C FWH 36C toHD TK	HD-02.2C-02N		RO11	01UT135	0.365	0.089	Band	Yes
HD-03.1A FWH 35A toHD TK	HD-03.1A-10P		1994		0.250	0.032	Band	No (2)
HD-03.1A FWH 35A toHD TK	HD-03.1A-11E		1994		0.250	0.040	Blanket	Yes

CHECWORKS Line Name	Component Name	Component Section	Period	Report Number	Tinit orTnom (in.)	Wear (in.)	Method	In LCF Calc (Yes/No)
HD-03.1A FWH 35A toHD TK	HD-03.1A-12E		1994		0.250	0.043	Blanket	Yes
HD-03.1A FWH 35A toHD TK	HD-03.1A-13P		1994		0.250	0.032	Band	Yes
HD-03.1A FWH 35A toHD TK	HD-03.1A-14E		1994		0.250	0.032	Blanket	Yes
HD-03.1A FWH 35A toHD TK	HD-03.1A-16N		1994		0.250	0.103	Band	No(9)
HD-03.1 C FWH 35C toHD TK	HD-03.1C-12P	Entered as US Ext ofHD-03.1C-13E	RO13	05UT040	0.250	0.037	Band	No(1)
HD-03.1 C FWH 35C toHD TK	HD-03.1C-13E	Main	RO13	05UT040	0.250	0.059	Blanket	Yes
HD-03.1 C FWH 35C toHD TK	HD-03.1C-14E	Main	RO13	05UT040	0.250	0.084	Blanket	Yes
HD-03.1 C FWH 35C toHD TK	HD-03.1C-15P	Main	RO13	05UT040	0.250	0.038	Band	Yes
HD-03.1C FWH 35C toHD TK	HD-03.1C-16E	Main	RO13	05UT040	0.250	0.031	Blanket	Yes
HD-04.1A FWH 34A toFWH 33A	-01T D/SFlange		RO9		0.280	N/A	N/A	No (14)
HD-04.1A FWH 34A toFWH 33A	HD-04.1A-15P		RO11	01UT133	0.280	0.080	Band	No (2)
HD-04.1A FWH 34A toFWH 33A	HD-04.2A-01E		RO11	01UT133	0.280	0.106	Blanket	No
HD-04.1A FWH 34A toFWH 33A	HD-04.2A-01E		RO11	01UT133	0.237	0.102	Blanket	No
HD-04.1A FWH 34A toFWH 33A	HD-04.3A-01R		RO11	01UT133	0.237	0.053	Band	No(3)

CHECWORKS Line Name	Component Name	Component Section	Period	Report Number	Tinit orTnom (in.)	Wear (in.)	Method	In LCF Calc (Yes/No)
HD-04.1A FWH 34A toFWH 33A	HD-04.3A-01R		RO11	01UT133	0.216	0.044	Band	No(3)
HD-04.1A FWH 34A toFWH 33A	HD-05.1A-01V		RO9		0.216	0.034	Blanket	No (10)
HD-04.1A FWH 34A toFWH 33A	HD-05.1A-02R		RO11	01UT133	0.216	0.161	Band	No (20)
HD-04.1A FWH 34A toFWH 33A	HD-05.1A-02R		RO11	01UT133	0.280	0.074	Band	Yes
HD-04.1A FWH 34A toFWH 33A	HD-05.1A-02R	Baseline D/S Main	RO12	03UT122				
HD-04.1A FWH 34A toFWH 33A	HD-05.1A-02R	Baseline U/S Main	RO12	03UT122				
HD-04.1A FWH 34A toFWH 33A	HD-05.1A-02R		RO9		0.216	0.124	Band	Yes
HD-04.1A FWH 34A toFWH 33A	HD-05.1A-02R		RO9		0.280	0.083	Band	Yes
HD-04.1A FWH 34A toFWH 33A	HD-05.2A-01T		RO11	01 UT133	0.280	0.111	Blanket	Yes
HD-04.1A FWH 34A toFWH 33A	HD-05.2A-01T		RO11	01UT133	0.280	0.078	Blanket	No (6)
HD-04.1A FWH 34A toFWH 33A	HD-05.2A-01T		RO11	01UT133	0.280	0.104	Blanket	Yes
HD-04.1A FWH 34A toFWH 33A	HD-05.2A-01T		RO9		0.280	0.088	Blanket	Yes
HD-04.1A FWH 34A toFWH 33A	HD-05.2A-01T		RO9		0.280	0.066	Blanket	No (6)
HD-04.1A FWH 34A toFWH 33A	HD-05.2A-01T		RO9		0.280	0.130	Blanket	Yes

CHECWORKS Line Name	Component Name	Component Section	Period	Report Number	Tinit orTnom (in.)	Wear (in.)	Method	In LCF Calc (Yes/No)
HD-04.1A FWH 34A toFWH 33A	HD-05.2A-02P		RO11	01UT133	0.280	0.039	Band	Yes
HD-04.1A FWH 34A toFWH 33A	HD-05.2A-02P		RO9		0.280	0.040	Band	Yes
HD-04.1 B FWH 34B toFWH 33B	-01T D/SFlange		RO9		0.280	N/A	N/A	No (14)
HD-04.1 B FWH 34B toFWH 33B	HD-04.2B-01E	U/S Main	RO12	O3UT034	0.280	0.053	Blanket	Yes
HD-04.1 B FWH 34B toFWH 33B	HD-04.2B-01E	D/S Main	RO12	O3UT034	0.237	0.102	Blanket	Yes
HD-04.1 B FWH 34B toFWH 33B	HD-04.3B-01R	U/S Main	RO12	O3UT034	0.237	0.132	Band	Yes
HD-04.1 B FWH 34B toFWH 33B	HD-04.3B-01R	D/S Main	RO12	O3UT034	0.216	0.065	Band	No(3)
HD-04.1 B FWH 34B toFWH 33B	HD-05.1B-01V		RO9		0.216	0.034	Blanket	No (10)
HD-04.1 B FWH 34B toFWH 33B	HD-05.1B-02R	U/S Main	RO12	O3UT034	0.216	0.135	Band	Yes
HD-04.1 B FWH 34B toFWH 33B	HD-05.1B-02R	D/S main	RO12	O3UT034	0.280	0.125	Band	Yes
HD-04.1 B FWH 34B toFWH 33B	HD-05.1B-02R		RO9		0.216	0.082	Band	Yes
HD-04.1 B FWH 34B toFWH 33B	HD-05.1B-02R		RO9		0.280	0.093	Band	Yes
HD-04.1 B FWH 34B toFWH 33B	HD-05.2B-01T	U/S Main	RO12	O3UT034	0.280	0.074	Blanket	Yes
HD-04.1 B FWH 34B toFWH 33B	HD-05.2B-01T	D/S Main	RO12	O3UT034	0.280	0.072	Blanket	No (6)

CHECWORKS Line Name	Component Name	Component Section	Period	Report Number	Tinit orTnom (in.)	Wear (in.)	Method	In LCF Calc (Yes/No)
HD-04.1 B FWH 34B toFWH 33B	HD-05.2B-01T	Branch	RO12	O3UT034	0.280	0.098	Blanket	Yes
HD-04.1 B FWH 34B toFWH 33B	HD-05.2B-01T		RO9		0.280	0.125	Blanket	Yes
HD-04.1 B FWH 34B toFWH 33B	HD-05.2B-01T		RO9		0.280	0.076	Blanket	No (6)
HD-04.1 B FWH 34B toFWH 33B	HD-05.2B-01T		RO9		0.280	0.141	Blanket	Yes
HD-04.1 B FWH 34B toFWH 33B	HD-05.2B-02P	Entered as branch ext.of HD-05.2B-01T	RO12	03UT034	0.280	0.054	Band	No (2)
HD-04.1 B FWH 34B toFWH 33B	HD-05.2B-02P		RO9		0.280	0.058	Band	No (2)
HD-04.1 C FWH 34C toFWH 33C	-01T D/SFlange		RO9		0.280	N/A	N/A	No (14)
HD-04.1 C FWH 34C toFWH 33C	HD-04.1C-23P	Entered as U/S ext. ofHD-04.2C-01E	RO12	03UT028	0.280	0.067	Pt to Pt	No (2)
HD-04.1 C FWH 34C toFWH 33C	HD-04.1C-23P		RO9		0.280	0.044	Band	No (2)
HD-04.1 C FWH 34C toFWH 33C	HD-04.2C-01E	U/S Main	RO12	03UT028	0.280	0.104	Pt to Pt	Yes
HD-04.1 C FWH 34C toFWH 33C	HD-04.2C-01E	D/S Main	RO12	03UT028	0.237	0.175	Pt to Pt	Yes
HD-04.1 C FWH 34C toFWH 33C	HD-04.2C-01E		RO9		0.280	0.073	Band	Yes
HD-04.1 C FWH 34C toFWH 33C	HD-04.2C-01E		RO9		0.237	0.118	Band	Yes
HD-04.1 C FWH 34C toFWH 33C	HD-04.3C-01 R		RO11	01 UT065	0.237	0.043	Band	No(3)

CHECWORKS Line Name	Component Name	Component Section	Period	Report Number	Tinit orTnom (in.)	Wear (in.)	Method	In LCF Calc (Yes/No)
HD-04.1 C FWH 34C toFWH 33C	HD-04.3C-01R		RO11	01UT065	0.216	0.057	Band	Yes
HD-04.1 C FWH 34C toFWH 33C	HD-04.3C-01R	U/S Main	RO12	03UT028	0.237	0.032	Band	No(1)
HD-04.1 C FWH 34C toFWH 33C	HD-04.3C-01R	D/S Main	RO12	03UT028	0.216	0.027	Band	No(1)
HD-04.1 C FWH 34C toFWH 33C	HD-05.1C-01V		RO9		0.216	0.046	Blanket	No (10)
HD-04.1 C FWH 34C toFWH 33C	HD-05.1C-02R		RO10	99UT080	0.216	0.050	Band	No(3)
HD-04.1 C FWH 34C toFWH 33C	HD-05.1C-02R		RO10	99UT080	0.280	0.112	Band	Yes
HD-04.1 C FWH 34C toFWH 33C	HD-05.1C-02R		RO10	99UT080	0.216	0.082	Band	No (3)
HD-04.1 C FWH 34C toFWH 33C	HD-05.1C-02R		RO11	01UT065	0.216	0.050	Band	Yes
HD-04.1C FWH 34C toFWH 33C	HD-05.1C-02R		RO11	01UT065	0.280	0.133	Band	Yes
HD-04.1 C FWH 34C toFWH 33C	HD-05.1C-02R	U/S Main	RO12	03UT028	0.216	0.063	Band	Yes
HD-04.1 C FWH 34C toFWH 33C	HD-05.1C-02R	D/S main	RO12	03UT028	0.280	0.140	Band	No(3)
HD-04.1 C FWH 34C toFWH 33C	HD-05.1C-02R		RO9		0.280	0.116	Band	Yes
HD-04.1 C FWH 34C toFWH 33C	HD-05.1C-02R		RO9		0.216	0.071	Band	Yes
HD-04.1 C FWH 34C toFWH 33C	HD-05.1C-02R	U/S Main	C013	05UT023	0.216	0.066	Band	Yes

CHECWORKS Line Name	Component Name	Component Section	Period	Report Number	Tinit orTnom (in.)	Wear (in.)	Method	In LCF Calc (Yes/No)
HD-04.1 C FWH 34C toFWH 33C	HD-05.1C-02R	D/S main	C013	05UT023	0.280	0.157	Band	Yes
HD-04.1 C FWH 34C toFWH 33C	HD-05.2C-01T		RO10	99UT080	0.280	0.085	Blanket	Yes
HD-04.1 C FWH 34C toFWH 33C	HD-05.2C-01T		RO10	99UT080	0.280	0.107	Blanket	No (6)
HD-04.1 C FWH 34C toFWH 33C	HD-05.2C-01T		RO10	99UT080	0.280	0.153	Blanket	Yes
HD-04.1 C FWH 34C toFWH 33C	HD-05.2C-01T		RO10	99UT080	0.280	0.049	Band	No (9)
HD-04.1 C FWH 34C toFWH 33C	HD-05.2C-01T	U/S Main	RO12	03UT028	0.280	0.063	Blanket	Yes
HD-04.1 C FWH 34C toFWH 33C	HD-05.2C-01T	D/S main	RO12	03UT028	0.280	0.071	Blanket	No (6)
HD-04.1 C FWH 34C toFWH 33C	HD-05.2C-01T	Branch	RO12	03UT028	0.280	0.141	Blanket	Yes
HD-04.1 C FWH 34C toFWH 33C	HD-05.2C-01T		RO9		0.280	0.064	Blanket	Yes
HD-04.1 C FWH 34C toFWH 33C	HD-05.2C-01T		RO9		0.280	0.099	Blanket	No (6)
HD-04.1 C FWH 34C toFWH 33C	HD-05.2C-01T		RO9		0.280	0.100	Blanket	Yes
HD-04.1 C FWH 34C toFWH 33C	HD-05.2C-02P	Branch ext. of HD-05.2C-01T	RO12	03UT028	0.280	0.035	Band	No (2)
HD-04.1 C FWH 34C toFWH 33C	HD-05.2C-02P		RO9		0.280	0.031	Band	No (2)
HD-06.1A FWH 33A toFWH 32A	-03T D/SFlange		RO9		0.250	N/A	N/A	No (14)

CHECWORKS Line Name	Component Name	Component Section	Period	Report Number	Tinit orTnom (in.)	Wear (in.)	Method	In LCF Calc (Yes/No)
HD-06.1A FWH 33A toFWH 32A	-03T D/SFlange		RO9		0.250	N/A	N/A	No (14)
HD-06.1A FWH 33A toFWH 32A	-03T D/SFlange		RO9		0.250	N/A	N/A	No (14)
HD-06.1A FWH 33A toFWH 32A	HD-06.1A-41E	Main	RO12	03UT059	0.250	0.056	Blanket	Yes
HD-06.1A FWH 33A toFWH 32A	HD-06.1A-42P	Entered as D/S ext. ofHD-06.1A-41 E	RO12	03UT059	0.250	0.047	Band	Yes
HD-06.1A FWH 33A toFWH 32A	HD-06.2A-01E	D/S Main	RO12	03UT059	0.280	0.164	Blanket	Yes
HD-06.1A FWH 33A toFWH 32A	HD-06.2A-01E	U/S Main	RO12	03UT059	0.250	1.061	Blanket	Yes
HD-06.1A FWH 33A toFWH 32A	HD-07.1A-02R	D/S Main	RO12	03UT059	0.250	0.107	Band	Yes
HD-06.1A FWH 33A toFWH 32A	HD-07.1A-02R	U/S Main	RO12	03UT059	0.280	0.089	Band	Yes
HD-06.1A FWH 33A toFWH 32A	HD-07.2A-02P	Main	RO12	03UT059	0.250	0.067	Band	Yes
HD-06.1A FWH 33A toFWH 32A	HD-07.2A-02P		RO9		0.250	0.065	Band	No (2)
HD-06.1A FWH 33A toFWH 32A	HD-07.2A-03T		RO9		0.250	0.081	Blanket	Yes
HD-06.1A FWH 33A toFWH 32A	HD-07.2A-03T		RO9		0.250	0.076	Blanket	No (6)
HD-06.1A FWH 33A toFWH 32A	HD-07.2A-03T		RO9		0.250	0.170	Blanket	Yes
HD-06.1A FWH 33A toFWH 32A	HD-07.1B-02R	U/S Main	C013	05UT026	0.280	0.088	Band	Yes

CHECWORKS Line Name	Component Name	Component Section	Period	Report Number	Tinit orTnom (in.)	Wear (in.)	Method	In LCF Calc (Yes/No)
HD-06.1A FWH 33A toFWH 32A	HD-07.1B-02R	D/S Main	C013	05UT026	0.250	0.110	Band	Yes
HD-06.1A FWH 33A toFWH 32A	HD-07.2A-04P		RO9		0.250	0.084	Band	No (2)
HD-06.1 B FWH 33B toFWH 32B	HD-07.2B-02P		RO9		0.250	0.047	Band	No (2)
HD-06.1 B FWH 33B toFWH 32B	HD-07.2B-03T		RO 9		0.250	0.107	Blanket	Yes
HD-06.1 B FWH 33B toFWH 32B	HD-07.2B-03T		RO 9		0.250	0.204	Blanket	No (6)
HD-06.1 B FWH 33B toFWH 32B	HD-07.2B-03T		RO 9		0.250	0.153	Blanket	Yes
HD-06.1 B FWH 33B toFWH 32B	HD-07.2B-04P		RO 9		0.250	0.049	Band	No (2)
HD-06.1 C FWH 33C toFWH 32C	HD-07.1C-02R		RO 11	01UT101	0.280	0.083	Band	Yes
HD-06.1 C FWH 33C toFWH 32C	HD-07.1C-02R		RO 11	01UT101	0.250	0.066	Band	Yes
HD-06.1 C FWH 33C toFWH 32C	HD-07.2C-02P		RO 11	01UT101	0.250	0.039	Band	Yes
HD-06.1 C FWH 33C toFWH 32C	HD-07.2C-02P		RO 9		0.250	0.024	Band	No (1)
HD-06.1 C FWH 33C toFWH 32C	HD-07.2C-03T		RO 9		0.250	0.171	Blanket	Yes
HD-06.1 C FWH 33C toFWH 32C	HD-07.2C-03T		RO 9		0.250	0.152	Blanket	No (6)
HD-06.1 C FWH 33C toFWH 32C	HD-07.2C-03T		RO 9		0.250	0.159	Blanket	Yes

CHECWORKS Line Name	Component Name	Component Section	Period	Report Number	Tinit orTnom (in.)	Wear (in.)	Method	In LCF Calc (Yes/No)
HD-06.1 C FWH 33C toFWH 32C	HD-07.2C-04P		RO 9		0.250	0.048	Band	No (2)
HD-06.1 C FWH 33C toFWH 32C	HD-6.1C-33P		RO 11	01UT101	0.250	0.038	Band	No (2)
HD-06.1 C FWH 33C toFWH 32C	HD-6.2C-01E		RO 11	01UT101	0.250	0.063	Blanket	Yes
HD-06.1 C FWH 33C toFWH 32C	HD-6.2C-01E		RO 11	01UT101	0.280	0.117	Blanket	Yes
HD-08.1A FWH 32A toFWH 31A	HD-09.1A-02R		199 4		0.250	0.131	Band	No(9)
HD-08.1A FWH 32A toFWH 31A	HD-09.1A-02R		199 4		0.250	0.069	Band	Yes
HD-08.1A FWH 32A toFWH 31A	HD-09.2A-03E					0.024	T DAT	No (1)
HD-08.1 B FWH 32B toFWH 31B	HD-09.1B-02R		199 4		0.250	0.078	Band	Yes
HD-08.1 B FWH 32B toFWH 31B	HD-09.1B-02R		199 4		0.250	0.050	Band	Yes
HD-08.1 C FWH 32C toFWH 31C	HD-09.1C-02R		199 4		0.250	0.108	Band	No(9)
HD-08.1 C FWH 32C toFWH 31C	HD-09.1C-02R		199 4		0.250	0.087	Band	No(9)
HD-09.3A FWH 32A toFWH 31A	HD-09.3A-01P					0.019	T DAT	No (1)
HD-09.4A FWH 32A toFWH 31A	HD-09.4A-02E					0.080	T DAT	No (3)
HD-10.1A HD TK toHD PMP 31	HD-10.1A-02P	Main	RO 13	05UT056	0.375	0.029	Band	No(2)

CHECWORKS Line Name	Component Name	Component Section	Period	Report Number	Tinit orTnom (in.)	Wear (in.)	Method	In LCF Calc (Yes/No)
HD-10.1A HD TK toHD PMP 31	HD-10.2A-01E	US Main	RO 13	05UT056	0.375	0.045	Blanket	Yes
HD-10.1A HD TK toHD PMP 31	HD-10.2A-01E	DS Main	RO 13	05UT056	0.312	0.041	Blanket	Yes
HD-10.1A HD TK toHD PMP 31	HD-10.2A-02E	Main	RO 13	05UT056	0.312	0.067	Blanket	Yes
HD-10.1A HD TK toHD PMP 31	HD-10.2A-03P	Main	RO 13	05UT056	0.312	0.050	Band	Yes
HD-11.1A HD PMP 31to HDR	HD-11.1A-01N		RO 12	03UT103	0.500	0.023	Band	No (1)
HD-11.1A HD PMP 31to HDR	HD-11.1A-02V	Valve Body	RO 12	03UT103				No (10)
HD-11.1A HD PMP 31to HDR	HD-11.2A-01R	D/S Main	RO 12	03UT103	0.322	0.027	Band	No (1)
HD-11.1A HD PMP 31to HDR	HD-11.2A-01R	U/S Main	RO 12	03UT103	0.500	0.091	Band	Yes
HD-11.1A HD PMP 31to HDR	HD-12.1A-01R	Entered as D/S ext. ofHD-11.2A-01R	RO 12	03UT103	0.322	0.041	Band	Yes
HD-11.1A HD PMP 31to HDR	HD-12.1A-01V	D/S Valve (flange)	RO 12	03UT103	0.322	0.208	Blanket	No (10)
HD-11.1A HD PMP 31to HDR	HD-12.1A-01V		RO 8		0.500	0.108	Blanket	No (10)
HD-11.1A HD PMP 31to HDR	HD-12.1A-02R	D/S Main	RO 12	03UT103	0.500	0.099	Band	Yes
HD-11.1A HD PMP 31to HDR	HD-12.1A-02R	U/S Main	RO 12	03UT103	0.322	0.032	Band	No(3)
HD-11.1A HD PMP 31to HDR	HD-12.1A-02R		RO 8		0.500	0.299	Band	No (3)

CHECWORKS Line Name	Component Name	Component Section	Period	Report Number	Tinit orTnom (in.)	Wear (in.)	Method	In LCF Calc (Yes/No)
HD-11.1A HD PMP 31to HDR	HD-12.1A-02R		RO 8		0.322	0.019	Band	No (1)
HD-11.1A HD PMP 31to HDR	HD-12.2A-05P		RO 8		0.664	0.094	Band	No (2)
HD-11.1A HD PMP 31to HDR	HD-12.2A-06O		RO 11	01UT122	0.500	0.083	Band	No (10)
HD-11.1A HD PMP 31to HDR	HD-12.2A-06O		RO 11	01UT122	0.500	0.058	Band	No (2)
HD-11.1A HD PMP 31to HDR	HD-12.2A-07P		RO 11	01UT122	0.500	0.073	Band	Yes
HD-11.1A HD PMP 31to HDR	HD-12.2A-07P		RO 8		0.569	0.077	Band	Yes
HD-11.1A HD PMP 31to HDR	up ext of -06O							
HD-11.1B HD PMP 32to HDR	HD-11.2B-01R		RO 10	99UT242	0.500	0.161	Point toPoint	Yes
HD-11.1B HD PMP 32to HDR	HD-11.2B-01R		RO 10	99UT242	0.322	0.097	Point toPoint	Yes
HD-11.1B HD PMP 32to HDR	HD-11.2B-01R		RO 8		0.500	0.109	Band	Yes
HD-11.1B HD PMP 32to HDR	HD-1 1 .2B-01 R		RO 8		0.322	0.051	Band	Yes
HD-11.1B HD PMP 32to HDR	HD-12.1B-01V		RO 11	99UT242	0.322	0.115	Band	No (10)
HD-11.1B HD PMP 32to HDR	HD-12.1B-01V		RO 8		0.322	0.066	Blanket	No (10)
HD-11.1B HD PMP 32to HDR	HD-12.1B-02R	US Main	RO 13	05UT107	0.322	0.070	Band	No(3)

CHECWORKS Line Name	Component Name	Component Section	Period	Report Number	Tinit orTnom (in.)	Wear (in.)	Method	In LCF Calc (Yes/No)
HD-11.1B HD PMP 32to HDR	HD-12.1B-02R	DS Main	RO 13	05UT107	0.500	0.056	Band	Yes
HD-11.1B HD PMP 32to HDR	HD-12.2B-02P		RO 8		0.539	0.042	Band	Yes
HD-11.1B HD PMP 32to HDR	HD-12.2B-03E		RO 8		0.535	0.087	Blanket	Yes
HD-11.1B HD PMP 32to HDR	HD-12.2B-04T		RO 8		0.500	0.289	Blanket	No (3)
HD-11.1B HD PMP 32to HDR	HD-12.2B-04T		RO 8		0.500	0.280	Blanket	No (3)
HD-11.1B HD PMP 32to HDR	HD-12.2B-04T		RO 8		0.500	0.498	Blanket	No (3)
HD-11.1B HD PMP 32to HDR	HD-12.2B-05P		RO 8		0.500	0.043	Band	Yes
HD-11.1B HD PMP 32to HDR	HD-12.2B-06O		RO 10	99UT256	0.516	0.088	Band	No (10)
HD-11.1B HD PMP 32to HDR	HD-12.2B-06O		RO 10	99UT256	0.527	0.090	Band	Yes
HD-11.1B HD PMP 32to HDR	HD-12.2B-06O					0.079	T DAT	Yes
HD-11.1B HD PMP 32to HDR	HD-12.2B-08T					0.045	T DAT	No (6)
HD-11.1B HD PMP 32to HDR	HD-12.2B-08T					0.082	T DAT	Yes
HD-11.1B HD PMP 32to HDR	HD-12.3-01P					0.038	T DAT	Yes
HD-12.2A HD PMPHDR to CD SYS	HD-12.2A-08T					0.069	T DAT	Yes

CHECWORKS Line Name	Component Name	Component Section	Period	Report Number	Tinit orTnom (in.)	Wear (in.)	Method	In LCF Calc (Yes/No)
HD-12.2A HD PMPHDR to CD SYS	HD-12.2A-08T					0.096	T DAT	Yes
HD-12.2A HD PMPHDR to CD SYS	HD-12.4-01E					0.162	T DAT	Yes
MSD-01.13A HDR toMSEP TK 33A	MSD-01.13A-01T		RO 9	97UT107	0.250	0.148	Blanket	Yes
MSD-01.13A HDR toMSEP TK 33A	MSD-01.13A-02P		RO 9	97UT107	0.250	0.046	Band	Yes
MSD-01.13A HDR toMSEP TK 33A	MSD-01.13A-03E		RO 9	97UT1 08	0.250	0.089	Blanket	Yes
MSD-01.13A HDR to MSEP TK 33A	MSD-01.13A-07P				0.268	0.236	T DAT	Yes
MSD-01.13A HDR to MSEP TK 33A	MSD-01.13A-08E				0.437	0.279	T DAT	Yes
MSD-01.13A HDR to MSEP TK 33A	MSD-01.13A-09P				0.382	0.291	T DAT	Yes
MSD-01.13B HDR to MSEP TK 33B	MSD-01.13B-01T	U/S Main	RO 12	03UT098	0.250	0.065	Blanket	Yes
MSD-01.13B HDR to	MSD-01.13B-							

CHECWORKS Line Name	Component Name	Component Section	Period	Report Number	Tinit orTnom (in.)	Wear (in.)	Method	In LCF Calc (Yes/No)
MSEP TK 33B	01T	D/S Main	RO 12	03UT098	0.250	0.222	Blanket	No (4)
MSD-01.13B HDR to MSEP TK 33B	MSD-01.13B-01T	U/S Ext.	RO 12	03UT098	0.250	0.057	Band	Yes
MSD-01.13B HDR to MSEP TK 33B	MSD-01.13B-01T	D/S Ext.	RO 12	03UT098	0.250	0.052	Band	Yes
MSD-01.13B HDR to MSEP TK 33B	MSD-01.13B-01T	Branch	RO 12	03UT098	0.250	0.221	Blanket	No (4)
MSD-01.13B HDR to MSEP TK 33B	MSD-01.13B-02P	Main	RO 12	03UT098	0.250	0.048	Band	Yes
MSD-01.14A TK 33A to HD TK	MSD-01.14A-04P		94/ 95		0.324	0.033	Band	No (1)
MSD-01.14A TK 33A to HD TK	MSD-01.15A-01E		94/ 95		0.322	0.108	Blanket	Yes
MSD-01.14A TK 33A to HD TK	MSD-01.15A-01E		94/ 95		0.280	0.138	Blanket	Yes

CHECWORKS Line Name	Component Name	Component Section	Period	Report Number	Tinit orTnom (in.)	Wear (in.)	Method	In LCF Calc (Yes/No)
MSD-01.14A TK 33A to HD TK	MSD-01.15A-04E		94/95		0.341	0.157	Blanket	Yes
MSD-01.14A TK 33A to HD TK	MSD-01.15A-05E		94/95		0.322	0.102	Blanket	Yes
MSD-01.14A TK 33A to HD TK	MSD-01.15A-06P		94/95		0.285	0.092	Band	Yes
MSD-01.14A TK 33A to HD TK	MSD-01.15A-08P		94/95		0.280	0.044	Band	No (1)
MSD-01.14A TK 33A to HD TK	MSD-01.15A-09E		94/95		0.302	0.075	Blanket	Yes
MSD-01.14A TK 33A to HD TK	MSD-01.15A-10P		94/95		0.306	0.049	Band	Yes
MSD-01.14A TK 33A to HD TK	MSD-01.15A-10P		94/95		0.306	0.027	Band	No (1)
MSD-01.14A TK 33A	MSD-01.15A-							

CHECWORKS Line Name	Component Name	Component Section	Period	Report Number	Tinit orTnom (in.)	Wear (in.)	Method	In LCF Calc (Yes/No)
to HD TK	10P		RO 9	97UT061	0.306	0.032	Band	No (1)
MSD-01.14A TK 33A to HD TK	MSD-01.15A-11E		94/95		0.290	0.121	Blanket	Yes
MSD-01.14A TK 33A to HD TK	MSD-01.15A-11E		RO 9	97UT061	0.290	N/A	N/A	No (8)
MSD-01.14A TK 33A to HD TK	MSD-01.15A-12P		94/95		0.272	0.083	Band	Yes
MSD-01.14A TK 33A to HD TK	MSD-01.15A-12P		94/95		0.272	0.057	Band	No (1)
MSD-01.14A TK 33A to HD TK	MSD-01.15A-12P		RO 9	97UT061	0.272	N/A	N/A	No (8)
MSD-01.14A TK 33A to HD TK	MSD-01.15A-12P		RO 9	97UT093	0.272	N/A	N/A	No (8)
MSD-01.14A TK 33A to HD TK	MSD-01.15A-13E		94/95		0.334	0.133	Blanket	Yes

CHECWORKS Line Name	Component Name	Component Section	Period	Report Number	Tinit orTnom (in.)	Wear (in.)	Method	In LCF Calc (Yes/No)
MSD-01.14A TK 33A to HD TK	MSD-01.15A-13E		RO 9	97UT093	0.334	0.151	Blanket	Yes
MSD-01.14A TK 33A to HD TK	MSD-01.15A-14P		94/ 95		0.281	0.157	Band	Yes
MSD-01.14A TK 33A to HD TK	MSD-01.15A-14P		RO 9	97UT062	0.281	0.151	Band	Yes
MSD-01.14A TK 33A to HD TK	MSD-01.15A-14P		RO 9	97UT062	0.281	N/A	N/A	No (8)
MSD-01.14A TK 33A to HD TK	MSD-01.15A-15E		94/ 95		0.331	0.084	Blanket	Yes
MSD-01.14A TK 33A to HD TK	MSD-01.15A-15E		RO 9	97UT062	0.331	0.084	Blanket	Yes
MSD-01.14A TK 33A to HD TK	MSD-01.15A-16P		94/ 95		0.284	0.084	Band	Yes
MSD-01.14A TK 33A	MSD-01.15A-							

CHECWORKS Line Name	Component Name	Component Section	Period	Report Number	Tinit orTnom (in.)	Wear (in.)	Method	In LCF Calc (Yes/No)
to HD TK	16P		94/ 95		0.284	0.061	Band	No (1)
MSD-01.14A TK 33A to HD TK	MSD-01.15A- 17E		94/ 95		0.280	0.061	Blanket	Yes
MSD-01.14A TK 33A to HD TK	MSD-01.15A- 18P		94/ 95		0.280	0.164	Band	Yes
MSD-01.14A TK 33A to HD TK	MSD-01.15A- 18P		94/ 95		0.280	N/A	N/A	No (3)
MSD-01.14A TK 33A to HD TK	MSD-01.15A- 18P		94/ 95		0.280	0.036	Band	No (1)
MSD-01.14A TK 33A to HD TK	MSD-01.15A- 18P		94/ 95		0.280	N/A	N/A	No (3)
MSD-01.14A TK 33A to HD TK	MSD-01.15A- 19E		94/ 95		0.331	0.227	Blanket	Yes
MSD-01.14A TK 33A to HD TK	MSD-01.15A- 19E		94/ 95		0.331	N/A	N/A	No (3)

CHECWORKS Line Name	Component Name	Component Section	Period	Report Number	Tinit orTnom (in.)	Wear (in.)	Method	In LCF Calc (Yes/No)
MSD-01.14A TK 33A to HD TK	MSD-01.15A-20N		94/95		0.280	0.064	Band	Yes
MSD-01.14A TK 33A to HD TK	MSD-01.15A-22P		94/95		0.281	0.027	Band	No (1)
MSD-01.14B TK 33B to HD TK	MSD-01.14B-04P		RO 9	97UT097	0.322	0.045	Band	No (1)
MSD-01.14B TK 33B to HD TK	MSD-01.15B-01E		RO 9	97UT097	0.322	0.084	Blanket	Yes
MSD-01.14B TK 33B to HD TK	MSD-01.15B-01E		RO 9	97UT097	0.280	0.127	Blanket	Yes
MSD-01.14B TK 33B to HD TK	MSD-01.15B-02E		RO 9	97UT096	0.280	0.049	Blanket	Yes
MSD-01.14B TK 33B to HD TK	MSD-01.15B-03P		RO 9	97UT096	0.280	0.114	Band	Yes
MSD-01.14B TK 33B	MSD-01.15B-							

CHECWORKS Line Name	Component Name	Component Section	Period	Report Number	Tinit orTnom (in.)	Wear (in.)	Method	In LCF Calc (Yes/No)
to HD TK	06P		94/ 95		0.265	0.058	Band	Yes
MSD-01.14B TK 33B to HD TK	MSD-01.15B- 06P		RO 9	97UT182	0.265	N/A	N/A	No (8)
MSD-01 .1 4B TK 33B to HD TK	MSD-01 .1 5B- 07E		94/ 95		0.309	0.094	Blanket	Yes
MSD-01.14B TK 33B to HD TK	MSD-01.15B- 07E		RO 9	97UT182	0.309	N/A	N/A	No (8)
MSD-01 .1 4B TK 33B to HD TK	MSD-01 .1 5B- 13E		RO 10	N/A (6)	0.280	0.046	Blanket	No (16)
MSD-01.14B TK 33B to HD TK	MSD-01.15B- 13E		RO 10	N/A (6)	0.280	0.067	Band	No (1)
MSD-01.14B TK 33B to HD TK	MSD-01.15B- 13E		RO 10	N/A (6)	0.280	0.045	Band	No (16)
MSD-01.14B TK 33B to HD TK	MSD-01.15B- 1 3E		RO 11	01 UT1 37	0.280	0.094	Blanket	Yes

CHECWORKS Line Name	Component Name	Component Section	Period	Report Number	Tinit orTnom (in.)	Wear (in.)	Method	In LCF Calc (Yes/No)
MSD-01.14B TK 33B to HD TK	MSD-01.15B-1 4P		RO 11	01 UT1 37	0.280	0.071	Band	Yes
MSD-01.14B TK 33B to HD TK	MSD-01.15B-1 4P		RO 11	01 UT1 37	0.280	0.095	Band	No (1)
MSD-01.14B TK 33B to HD TK	MSD-01.15B-15E		RO 11	01UT137	0.280	0.120	Blanket	Yes
MSD-01.14B TK 33B to HD TK	MSD-01.15B-1 6P		RO 11	01 UT1 37	0.280	0.049	Band	Yes
MSD-01.14B TK 33B to HD TK	MSD-01.15B-26P		94/ 95		0.278	0.077	Band	No (1)
MSD-01.14B TK 33B to HD TK	MSD-01.15B-27E		94/ 95		0.341	0.150	Blanket	Yes
MSD-01.14B TK 33B to HD TK	MSD-01.15B-28P		94/ 95		0.282	0.096	Band	Yes
MSD-01 .3A HDR toMSEP TK 31A	MSD-01 .3A-01T	US Main	RO 13	05UT067	0.250	0.140	Band	No(22)

CHECWORKS Line Name	Component Name	Component Section	Period	Report Number	Tinit orTnom (in.)	Wear (in.)	Method	In LCF Calc (Yes/No)
MSD-01 .3A HDR toMSEP TK 31A	MSD-01 .3A-01T	DS Main	RO 13	05UT067	0.250	0.307	Band	No(16)
MSD-01 .3A HDR toMSEP TK 31A	MSD-01 .3A-01T	Branch	RO 13	05UT067	0.250	0.388	Band	No(7)
MSD-01 .3A HDR toMSEP TK 31A	MSD-01 .3A-02P	Main	RO 13	05UT067	0.250	0.060	Band	Yes
MSD-01 .3A HDR toMSEP TK 31A	MSD-01 .3A-03E	Main	RO 13	05UT067	0.250	0.055	Blanket	Yes
MSD-01 .4A TK 31 A toHD TK	MSD-01 .4A-04P		RO 8		0.349	0.050	Band	No (1)
MSD-01 .4A TK 31 A toHD TK	MSD-01 .5A-01 E		RO 8		0.322	0.064	Blanket	Yes
MSD-01 .4A TK 31 A toHD TK	MSD-01 .5A-01 E		RO 8		0.280	0.094	Blanket	Yes
MSD-01 .4A TK 31 A toHD TK	MSD-01 .5A-02P		RO8		0.314	0.035	Band	Yes
MSD-01 .4A TK 31 A toHD TK	MSD-01 .5A-04P		94/95		0.349	0.046	Band	No (1)
MSD-01 .4A TK 31 A toHD TK	MSD-01 .5A-05E		94/95		0.319	0.086	Blanket	Yes
MSD-01 .4A TK 31 A toHD TK	MSD-01 .5A-07P		94/95		0.289	0.044	Band	Yes
MSD-01 .4A TK 31 A toHD TK	MSD-01 .5A-08E		94/95		0.319	0.038	Blanket	Yes
MSD-01 .4A TK 31 A toHD TK	MSD-01 .5A-09P		94/95		0.317	0.037	Band	Yes
MSD-01 .4A TK 31 A toHD TK	MSD-01 .5A-23P		94/95		0.314	0.051	Band	No (1)

CHECWORKS Line Name	Component Name	Component Section	Period	Report Number	Tinit orTnom (in.)	Wear (in.)	Method	In LCF Calc (Yes/No)
MSD-01 .4A TK 31 A toHD TK	MSD-01 .5A-24E		94/95		0.302	0.064	Blanket	Yes
MSD-01 .4A TK 31 A toHD TK	MSD-01 .5A-25P		94/95		0.318	0.041	Band	Yes
MSD-01 .4A TK 31 A toHD TK	MSD-01 .5A-25P		94/95		0.280	0.064	Band	No (1)
MSD-01 .4A TK 31 A toHD TK	MSD-01 .5A-26E		94/95		0.280	0.065	Blanket	Yes
MSD-01 .4A TK 31 A toHD TK	MSD-01 .5A-27N		94/95		0.280	0.077	Band	Yes
MSD-01 .4B TK 31 B toHD TK	MSD-01 .5B-05P		94/95		0.307	0.038	Band	No (1)
MSD-01 .4B TK 31 B toHD TK	MSD-01 .5B-06E		94/95		0.303	0.055	Blanket	Yes
MSD-01.4B TK 31 B toHD TK	MSD-01.5B-07P		94/95		0.313	0.057	Band	Yes
MSD-01.4B TK 31 B toHD TK	MSD-01.5B-11P		RO11	01 UT1 36	0.280	0.037	Band	No (1)
MSD-01.4B TK 31B toHD TK	MSD-01.5B-11P_1		RO10	99UT280	0.280	0.046	Band	Yes
MSD-01.4B TK 31B toHD TK	MSD-01.5B-11P_1		RO10	99UT280	0.280	N/A	N/A	No (3)
MSD-01 .4B TK 31 B toHD TK	MSD-01 .5B-12E		RO 10	N/A (6)	0.280	0.031	Blanket	No (16)
MSD-01 .4B TK 31 B toHD TK	MSD-01 .5B-12E		RO 10	N/A (6)	0.280	0.025	Band	No (2)
MSD-01.4B TK 31B toHD TK	MSD-01.5B-12E		RO 10	N/A (6)	0.280	0.031	Band	Yes

CHECWORKS Line Name	Component Name	Component Section	Period	Report Number	Tinit orTnom (in.)	Wear (in.)	Method	In LCF Calc (Yes/No)
MSD-01.4B TK 31B toHD TK	MSD-01.5B-12E		RO 11	01UT136	0.280	0.065	Blanket	Yes
MSD-01.4B TK 31B toHD TK	MSD-01.5B-13P		RO 11	01UT136	0.280	0.045	Band	Yes
MSD-01 .4B TK 31 B toHD TK	MSD-01 .5B-25P		94/ 95		0.302	0.052	Band	No (1)
MSD-01 .4B TK 31 B toHD TK	MSD-01 .5B-25P		94/ 95		0.302	0.035	Band	No (1)
MSD-01 .4B TK 31 B toHD TK	MSD-01 .5B-26E		94/ 95		0.280	0.149	Blanket	Yes
MSD-01 .4B TK 31 B toHD TK	MSD-01 .5B-26E		94/ 95		0.280	N/A	N/A	No (3)
MSD-01 .4B TK 31 B toHD TK	MSD-01 .5B-27P		94/ 95		0.311	0.072	Band	Yes
MSD-01 .4B TK 31 B toHD TK	MSD-01 .5B-32P		94/ 95		0.302	N/A	N/A	No (1)
MSD-01 .4B TK 31 B toHD TK	Up ext of –12E							
MSD-01 .6B_1 MSEP32B to HDR	MSD-01 .6B-03P	Entered as DS Ext ofMSD-01.7B-01T	RO 13	05UT066	0.304	0.087	Band	Yes
MSD-01.6B_1 MSEP32B to HDR	MSD-01.6B-03P				0.312	0.079	T DAT	Yes
MSD-01 .6B_3 MSEP32B to HDR	MSD-01 .6B-07P		RO 11	01 UT096	0.304	0.094	Band	Yes

CHECWORKS Line Name	Component Name	Component Section	Period	Report Number	Tinit orTnom (in.)	Wear (in.)	Method	In LCF Calc (Yes/No)
MSD-01.6B_3 MSEP32B to HDR	MSD-01.6B-07P				0.264	0.062	T DAT	Yes
MSD-01.7A MSEP32A DR HDR	MSD-01.7A-01T		RO 10	N/A (6)	0.250	0.276	Blanket	No (16)
MSD-01.7A MSEP32A DR HDR	MSD-01.7A-01T		RO 10	N/A (6)	0.250	0.184	Blanket	No (16)
MSD-01 .7A MSEP32A DR HDR	MSD-01 .7A-01T		RO 10	N/A (6)	0.250	0.155	Band	No (1)
MSD-01 .7A MSEP32A DR HDR	MSD-01 .7A-01T		RO 10	N/A (6)	0.250	0.117	Band	Yes
MSD-01 .7B MSEP32B DR HDR	MSD-01 .7B-01T		RO 10	N/A (6)	0.250	0.143	Blanket	No (16)
MSD-01 .7B MSEP32B DR HDR	MSD-01 .7B-01T		RO 10	N/A (6)	0.250	0.135	Blanket	No (16)
MSD-01 .7B MSEP32B DR HDR	MSD-01 .7B-01T		RO 10	N/A (6)	0.312	0.062	Band	No (1)
MSD-01 .7B MSEP32B DR HDR	MSD-01 .7B-01T		RO 10	N/A (6)	0.304	0.054	Band	No (16)
MSD-01 .7B MSEP32B DR HDR	MSD-01 .7B-01T	US Main	RO 13	05UT066	0.250	0.043	Band	Yes

CHECWORKS Line Name	Component Name	Component Section	Period	Report Number	Tinit orTnom (in.)	Wear (in.)	Method	In LCF Calc (Yes/No)
MSD-01 .7B MSEP32B DR HDR	MSD-01 .7B-01T	DS Main	RO 13	05UT066	0.250	0.088	Band	Yes
MSD-01 .7B MSEP32B DR HDR	MSD-01 .7B-01T	Branch	RO 13	05UT066	0.250	0.299	Band	No(8)
MSD-01 .7B MSEP32B DR HDR	MSD-01 .7B-01T				0.304	0.084	T DAT	Yes
MSD-01 .7B MSEP32B DR HDR	MSD-01 .7B-02P		RO 11	01 UT096	0.264	0.047	Band	Yes
MSD-01 .7B MSEP32B DR HDR	MSD-01 .7B-02P	Entered as US Ext ofMSD-01.7B-01T	RO 13	05UT066	0.312	0.092	Band	No(1)
MSD-01 .8A HDR toMSEP TK 32A	MSD-01 .8A-01T		RO 10	N/A (6)	0.250	0.159	Blanket	Yes
MSD-01 .8A HDR toMSEP TK 32A	MSD-01 .8A-01T		RO 10	N/A (6)	0.250	0.178	Blanket	Yes
MSD-01 .8A HDR toMSEP TK 32A	MSD-01 .8A-01T		RO 10	N/A (6)	0.250	0.091	Band	No (1)
MSD-01 .8A HDR toMSEP TK 32A	MSD-01 .8A-01T		RO 10	N/A (6)	0.250	0.085	Band	No (1)
MSD-01 .8A HDR toMSEP TK 32A	MSD-01 .8A-01T	D/S Main	RO 12	03UT098	0.250	0.086	Band	Yes
MSD-01 .8A HDR toMSEP TK 32A	MSD-01 .8A-01T	U/S Main	RO 12	03UT098	0.250	0.143	Band	Yes
MSD-01 .8A HDR toMSEP TK 32A	MSD-01 .8A-02P	Main			0.250	0.068	Band	Yes

CHECWORKS Line Name	Component Name	Component Section	Period	Report Number	Tinit orTnom (in.)	Wear (in.)	Method	In LCF Calc (Yes/No)
MSD-01 .8A HDR toMSEP TK 32A	MSD-01 .8A-03E	Main			0.250	0.090	Blanket	Yes
MSD-01 .8A HDR toMSEP TK 32A	MSD-01 .8A-05P	Main			0.250	0.061	Band	Yes
MSD-01 .8B HDR toMSEP TK 32B	MSD-01 .8B-01T		RO 10	N/A (6)	0.250	0.122	Blanket	No (16)
MSD-01 .8B HDR toMSEP TK 32B	MSD-01 .8B-01T		RO 10	N/A (6)	0.250	0.018	Blanket	No (16)
MSD-01 .8B HDR toMSEP TK 32B	MSD-01 .8B-01T		RO 10	N/A (6)	0.264	0.029	Band	No (2)
MSD-01 .8B HDR toMSEP TK 32B	MSD-01 .8B-01T		RO 10	N/A (6)	0.304	0.071	Band	No (16)
MSD-01 .8B HDR toMSEP TK 32B	MSD-01 .8B-01T		RO 11	01UT096	0.250	0.104	Band	Yes
MSD-01 .8B HDR toMSEP TK 32B	MSD-01 .8B-01T		RO 11	01UT096	0.250	0.073	Band	Yes
MSD-01 .8B HDR toMSEP TK 32B	MSD-01 .8B-01T		RO 11	01UT096	0.250	0.218	Blanket	No (4)
MSD-01 .8B HDR toMSEP TK 32B	MSD-01 .8B-01T				0.285	0.058	T DAT	Yes
MSD-01 .8B HDR toMSEP TK 32B	MSD-01 .8B-02P		RO 11	01 UT096	0.285	0.061	Band	Yes
MSD-01 .8B HDR toMSEP TK 32B	MSD-01 .8B-02P		RO 9	97UT1 22	0.285	0.057	Band	No (1)
MSD-01 .8B HDR toMSEP TK 32B	MSD-01 .8B-03E		RO 9	97UT122	0.250	0.172	Blanket	Yes
MSD-01 .8B HDR toMSEP TK 32B	MSD-01 .8B-07P		RO 9	97UT121	0.250	0.069	Band	Yes

CHECWORKS Line Name	Component Name	Component Section	Period	Report Number	Tinit orTnom (in.)	Wear (in.)	Method	In LCF Calc (Yes/No)
MSD-01.8B HDR toMSEP TK 32B	MSD-01.8B-08N		RO 9	97UT121	0.250	0.057	Band	Yes
MSD-01.9A TK 32A to HD TK	MSD-01.1 0A-02P		94/95		0.304	0.037	Band	No (1)
MSD-01.9A TK 32A to HD TK	MSD-01.1 0A-03E		94/95		0.309	0.103	Blanket	Yes
MSD-01 .9A TK 32A to HD TK	MSD-01 .1 0A-04P		94/95		0.280	0.025	Band	No (2)
MSD-01 .9A TK 32A to HD TK	MSD-01 .1 0A-07P		94/95		0.293	0.048	Band	Yes
MSD-01.9A TK 32A to HD TK	MSD-01.10A-07P		RO 9	97UT056	0.293	N/A	N/A	No (8)
MSD-01 .9A TK 32A to HD TK	MSD-01 .1 0A-08E		94/95		0.307	0.166	Blanket	Yes
MSD-01.9A TK 32A to HD TK	MSD-01.10A-08E		RO 9	97UT056	0.307	N/A	N/A	No (8)

CHECWORKS Line Name	Component Name	Component Section	Period	Report Number	Tinit orTnom (in.)	Wear (in.)	Method	In LCF Calc (Yes/No)
MSD-01 .9A TK 32A to HD TK	MSD-01 .1 0A-09P		94/95		0.293	0.074	Band	Yes
MSD-01.9A TK 32A to HD TK	MSD-01.10A-09P		RO 9	97UT056	0.293	N/A	N/A	No (8)
MSD-01 .9A TK 32A to HD TK	MSD-01 .1 0A-21P		94/95		0.294	0.039	Band	No (1)
MSD-01.9A TK 32A to HD TK	MSD-01.10A-21P		RO 9	97UT064	0.294	0.041	Band	No (1)
MSD-01 .9A TK 32A to HD TK	MSD-01 .1 0A-22E		94/95		0.317	0.150	Blanket	Yes
MSD-01.9A TK 32A to HD TK	MSD-01.10A-22E		RO 9	97UT064	0.317	0.158	Blanket	Yes
MSD-01 .9A TK 32A to HD TK	MSD-01 .1 0A-23P		94/95		0.289	0.050	Band	Yes
MSD-01 .9A TK 32A to	MSD-01 .1 0A-							

CHECWORKS Line Name	Component Name	Component Section	Period	Report Number	Tinit orTnom (in.)	Wear (in.)	Method	In LCF Calc (Yes/No)
HD TK	23P		94/ 95		0.289	0.054	Band	No (1)
MSD-01.9A TK 32A to HD TK	MSD-01.10A- 23P		RO 9	97UT064	0.289	0.063	Band	Yes
MSD-01 .9A TK 32A to HD TK	MSD-01 .1 0A- 24E		94/ 95		0.280	0.224	Blanket	Yes
MSD-01 .9A TK 32A to HD TK	MSD-01 .1 0A- 24E		94/ 95		0.280	N/A	N/A	No (3)
MSD-01 .9A TK 32A to HD TK	MSD-01 .1 0A- 25N		94/ 95		0.280	0.111	Band	Yes
MSD-01 .9B TK 32B to HD TK	MSD-01 .1 0B- 01E		RO 9	97UT1 89	0.322	0.086	Blanket	Yes
MSD-01.9B TK 32B to HD TK	MSD-01.10B- 01 E		RO 9	97UT189	0.280	0.119	Blanket	Yes
MSD-01 .9B TK 32B to HD TK	MSD-01 .1 0B- 02E		RO 10	99UT283	0.280	N/A	N/A	No (3)

CHECWORKS Line Name	Component Name	Component Section	Period	Report Number	Tinit orTnom (in.)	Wear (in.)	Method	In LCF Calc (Yes/No)
MSD-01.9B TK 32B to HD TK	MSD-01.10B-02E		RO 10	99UT283	0.280	N/A	N/A	No (3)
MSD-01 .9B TK 32B to HD TK	MSD-01 .10B-02E		RO 9	97UT189	0.280	0.102	Blanket	Yes
MSD-01.9B TK 32B to HD TK	MSD-01.10B-03P		RO 9	97UT197	0.280	0.135	Band	Yes
MSD-01 .9B TK 32B to HD TK	MSD-01 .1 0B-04E		RO 9	97UT1 97	0.280	0.083	Blanket	Yes
MSD-01 .9B TK 32B to HD TK	MSD-01 .1 0B-06P		94/ 95		0.299	0.070	Band	Yes
MSD-01 .9B TK 32B to HD TK	MSD-01 .1 0B-07E		94/ 95		0.328	0.083	Blanket	Yes
MSD-01.9B TK 32B to HD TK	MSD-01.10B-07E		RO 10	99UT284	0.328	N/A	N/A	No (3)
MSD-01.9B TK 32B to	MSD-01.10B-							No (3)

CHECWORKS Line Name	Component Name	Component Section	Period	Report Number	Tinit orTnom (in.)	Wear (in.)	Method	In LCF Calc (Yes/No)
HD TK	07E		RO 10	99UT284	0.299	N/A	N/A	
MSD-01.9B TK 32B to HD TK	MSD-01.10B-07E		RO 10	99UT284	0.289	N/A	N/A	No (3)
MSD-01 .9B TK 32B to HD TK	MSD-01 .1 0B-08P		94/95		0.289	0.078	Band	Yes
MSD-01.9B TK 32B to HD TK	MSD-01.10B-10P		RO 11	01UT136	0.280	0.056	Band	No (1)
MSD-01.9B TK 32B to HD TK	MSD-01.10B-11E		RO 10	N/A (6)	0.280	0.050	Blanket	No (16)
MSD-01.9B TK 32B to HD TK	MSD-01.10B-11E		RO 10	N/A (6)	0.280	0.078	Band	No (1)
MSD-01.9B TK 32B to HD TK	MSD-01.10B-11E		RO 10	N/A (6)	0.280	0.051	Band	Yes
MSD-01.9B TK 32B to HD TK	MSD-01.10B-11E		RO 11	01UT136	0.280	0.093	Blanket	Yes

CHECWORKS Line Name	Component Name	Component Section	Period	Report Number	Tinit orTnom (in.)	Wear (in.)	Method	In LCF Calc (Yes/No)
MSD-01.9B TK 32B to HD TK	MSD-01.10B-12P		RO 11	01UT136	0.280	0.070	Band	Yes
MSD-01 .9B TK 32B toHD TK	MSD-01 .1 0B-24P		94/95		0.285	0.069	Band	No (1)
MSD-01 .9B TK 32B toHD TK	MSD-01 .1 0B-25E		94/95		0.316	0.136	Blanket	Yes
MSD-01 .9B TK 32B toHD TK	MSD-01 .1 0B-26P		94/95		0.290	0.072	Band	Yes
MSD-01 .9B TK 32B toHD TK	MSD-01 .9B-04P		RO9	97UT189	0.322	0.034	Band	No (1)
PD-01.3 PRESEP 1ADR to HDR	PD-01 .4-01 R	U/S Main	RO11	01 UT1 11	0.375	0.040	Band	Yes
PD-01.3 PRESEP 1ADR to HDR	PD-01 .4-01 R	D/S Main	RO11	01 UT1 11	0.365	0.050	Band	Yes
PD-01.3 PRESEP 1ADR to HDR	PD-01 .4-02B	Main	RO11	01 UT1 11	0.365	0.039	Blanket	Yes
PD-01.3 PRESEP 1ADR to HDR	PD-01 .4-03P	Entered as D/S Ext. ofPD-01 .4-02B	RO11	01 UT1 11	0.365	0.047	Band	Yes
PD-01.3 PRESEP 1ADR to HDR	PD-01 .4-10O	Main	RO8		0.380	0.023	Band	No (1)
PD-01 .5 PRESEP 2BDR to HDR	PD-01 .6-11 P	Entered as U/S Ext ofPD-01 .6-12E	RO12	03UT1 10	0.365	0.043	Band	No (2)

CHECWORKS Line Name	Component Name	Component Section	Period	Report Number	Tinit orTnom (in.)	Wear (in.)	Method	In LCF Calc (Yes/No)
PD-01 .5 PRESEP 2BDR to HDR	PD-01.6-12E	Main	RO12	03UT110	0.365	0.053	Blanket	Yes
PD-01 .5 PRESEP 2BDR to HDR	PD-01 .6-14O	Main	RO12	03UT1 10	0.365	0.021	Band	No (10)
PD-01 .7 PRESEP 2ADR to HDR	PD-01 .8-14O	Main	RO8		0.365	0.020	Band	No (1)
PD-02.2 PRESEPHDR to HD TK	PD-02.2-01T	U/S Main	RO8		0.375	0.139	Blanket	No (3)
PD-02.2 PRESEPHDR to HD TK	PD-02.2-01T	D/S Main	RO8		0.375	0.190	Blanket	No (3)
PD-02.2 PRESEPHDR to HD TK	PD-02.2-01T	Branch	RO8		0.365	0.027	Blanket	No (3)
PD-02.3 PRESEPHDR to HD TK	PD-02.3-01T	U/S Main	RO10	99UT279	0.375	0.061	Blanket	No (3)
PD-02.3 PRESEPHDR to HD TK	PD-02.3-01T	D/S Main	RO10	99UT279	0.375	0.330	Point toPoint	No (3)
PD-02.3 PRESEPHDR to HD TK	PD-02.3-01T	U/S Main	RO8		0.375	0.066	Blanket	No (3)
PD-02.3 PRESEPHDR to HD TK	PD-02.3-01T	D/S Main	RO8		0.375	0.244	Blanket	No (3)

CHECWORKS Line Name	Component Name	Component Section	Period	Report Number	Tinit orTnom (in.)	Wear (in.)	Method	In LCF Calc (Yes/No)
PD-02.4 PRESEPHDR to HD TK	PD-02.4-01T	U/S Main	RO10	99UT279	0.375	0.207	Point toPoint	No (3)
PD-02.4 PRESEPHDR to HD TK	PD-02.4-01T	D/S Main	RO10	99UT279	0.375	0.284	Point toPoint	No (3)
PD-02.4 PRESEPHDR to HD TK	PD-02.4-01T	Branch	RO10	99UT279	0.365	0.309	Point toPoint	No (3)
PD-02.4 PRESEPHDR to HD TK	PD-02.4-01T	Branch Ext.	RO10	99UT281	0.365	0.019	Band	No (2)
PD-02.4 PRESEPHDR to HD TK	PD-02.4-01T	U/S Main	RO8		0.375	0.139	Blanket	No (3)
PD-02.4 PRESEPHDR to HD TK	PD-02.4-01T	D/S Main	RO8		0.375	0.143	Blanket	No (3)
PD-02.4 PRESEPHDR to HD TK	PD-02.4-01T	Branch	RO8		0.365	0.188	Blanket	No (3)
PD-02.4 PRESEPHDR to HD TK	PD-02.4-02E	Main	RO10	99UT279	0.375	0.154	Point toPoint	Yes
PD-02.4 PRESEPHDR to HD TK	PD-02.4-15P	Entered as U/S Ext. ofPD-02.4-16E	RO10	99UT216	0.375	0.045	Band	No (2)
PD-02.4 PRESEPHDR to HD TK	PD-02.4-16E	Main	RO10	99UT216	0.375	0.044	Blanket	Yes

CHECWORKS Line Name	Component Name	Component Section	Period	Report Number	Tinit orTnom (in.)	Wear (in.)	Method	In LCF Calc (Yes/No)
PD-02.4 PRESEPHDR to HD TK	PD-02.4-17P	Entered as D/S Ext. ofPD-02.4-16E	RO10	99UT216	0.375	0.067	Band	Yes
PD-02.4 PRESEPHDR to HD TK	PD-02.4-1 9P	Entered as U/S Ext. ofPD-02.4-20O	RO11	01 UT1 23	0.375	0.055	Band	No (2)
PD-02.4 PRESEPHDR to HD TK	PD-02.4-20O	Main	RO11	01 UT1 23	0.421	0.054	Band	No (10)
PD-02.4 PRESEPHDR to HD TK	PD-02.4-20O	N/A	RO8		0.421	0.072	T DAT	No (3)
PD-02.4 PRESEPHDR to HD TK	PD-02.4-21 N	Main	RO11	01 UT1 23	0.899	0.084	Band	Yes
PD-02.4 PRESEPHDR to HD TK	PD-02.4-21 N	Main	RO8		0.899	0.084	T DAT	Yes
RHD-01.10A_2 TK33A to A HDR	RHD01.10A-19P	Entered as DS Ext ofRHD01.10A-18F	RO13	05UT077	0.432	0.062	Band	Yes
RHD-01.10A_2 TK33A to A HDR	RHD01.10A-19P	Entered as US Ext ofRHD01.10A-18F	RO13	05UT077	0.432	0.072	Band	No(1)
RHD-01.10A_2 TK33A to A HDR	RHD01.10A-20R	US Main	RO13	05UT077	0.432	0.020	Band	No(2)
RHD-01.10A_2 TK33A to A HDR	RHD01.10A-20R	DS Main	RO13	05UT077	0.500	0.065	Band	Yes
RHD-01.10A_2 TK33A to A HDR	RHD01.11A-01 E	Main	RO13	05UT077	0.500	0.110	Blanket	Yes

CHECWORKS Line Name	Component Name	Component Section	Period	Report Number	Tinit orTnom (in.)	Wear (in.)	Method	In LCF Calc (Yes/No)
RHD-01 .1 0A_2 TK33A to A HDR	RHD01 .1 1A-02P	Entered as DS Ext ofRHD01.11A-01E	RO13	05UT077	0.500	0.088	Band	Yes
RHD-01.10A_2 TK33A to A HDR	RHD01.12A-01T	U/S Main	RO10	99UT263	0.500	0.085	Blanket	No (4)
RHD-01.10A_2 TK33A to A HDR	RHD01.12A-01T	D/S Main	RO10	99UT263	0.500	0.078	Blanket	No (4)
RHD-01.10A_2 TK33A to A HDR	RHD01.12A-01T	Branch	RO10	99UT263	0.432	0.069	Band	No (4)
RHD-01.10A_2 TK33A to A HDR	RHD01.12A-01T	U/S Ext.	RO10	99UT263	0.500	0.062	Band	No (4)
RHD-01.10A_2 TK33A to A HDR	RHD01.12A-01T	Branch Ext.	RO10	99UT263	0.432	0.053	Band	No (4)
RHD-01.10A_2 TK33A to A HDR	RHD01.12A-02P	Entered as D/S Ext. ofRHD01.12A-01T	RO10	99UT263	0.500	0.054	Band	No (4)
RHD-01.10A_2 TK33A to A HDR	RHD01.12A-08E	Main	RO10	99UT255	0.432	0.110	Blanket	Yes
RHD-01.10A_2 TK33A to A HDR	RHD01.13A-01 R	U/S Main	RO10	99UT255	0.432	0.041	Band	Yes
RHD-01.10A_2 TK33A to A HDR	RHD01.13A-01R	D/S Main	RO10	99UT255	0.337	0.180	Band	Yes
RHD-01 .10A_2 TK33A to A HDR	RHD02.5A-01 V	Main	RO10	99UT255	0.337	0.067	Band	No (10)
RHD-01 .10A_2 TK33A to A HDR	RHD02.5A-01 V	Main	RO8		0.337	0.011	Band	No (10)
RHD-01 .10A_2 TK33A to A HDR	RHD02.5A-02R	U/S Main	RO11	01UT078	0.337	0.128	Band	Yes
RHD-01 .10A_2 TK33A to A HDR	RHD02.5A-02R	D/S Main	RO11	01UT078	0.432	0.113	Band	Yes

CHECWORKS Line Name	Component Name	Component Section	Period	Report Number	Tinit orTnom (in.)	Wear (in.)	Method	In LCF Calc (Yes/No)
RHD-01 .10A_2 TK33A to A HDR	RHD02.5A-02R	D/S Main	RO8		0.432	0.157	Band	No (3)
RHD-01 .10A_2 TK33A to A HDR	RHD02.5A-02R	U/S Main	RO8		0.337	0.081	Band	Yes
RHD-01.10A_2 TK33A to A HDR	RHD02.6A-01 P	Entered as D/S Ext. ofRHD02.5A-02R	RO11	01 UT078	0.432	0.050	Band	Yes
RHD-01.10A_2 TK33A to A HDR	RHD02.6A-01 P	Entered as U/S Ext. ofRHD02.6A-02E	RO11	01 UT078	0.432	0.034	Band	No (2)
RHD-01.10A_2 TK33A to A HDR	RHD02.6A-01 P	Entered as D/S Ext. ofRHD02.5A-02R	RO8		0.432	0.051	Band	Yes
RHD-01.10A_2 TK33A to A HDR	RHD02.6A-01 P	Entered as U/S Ext. ofRHD02.6A-02E	RO9	97UT081	0.432	0.035	Band	No (2)
RHD-01 .10A_2 TK33A to A HDR	RHD02.6A-02E	Main	RO11	01 UT078	0.432	0.127	Blanket	Yes
RHD-01 .10A_2 TK33A to A HDR	RHD02.6A-02E	Main	RO9	97UT081	0.432	0.096	Blanket	Yes
RHD-01.10A_2 TK33A to A HDR	RHD02.6A-03P	Entered as D/S Ext. ofRHD02.6A-02E	RO11	01UT078	0.432	0.102	Band	Yes
RHD-01.10A_2 TK33A to A HDR	RHD02.6A-03P	Entered as D/S Ext. ofRHD02.6A-02E	RO9	97UT081	0.432	0.104	Band	Yes
RHD-01.10B_1 RH33B to TK 33B	RHD01.10B-01N	Main	RO10	99UT275	0.432	0.142	Band	Yes
RHD-01.10B_1 RH33B to TK 33B	RHD01.10B-02P	Entered as D/S Ext. ofRHD01.10B-01N	RO10	99UT275	0.432	0.084	Band	Yes
RHD-01.10B_1 RH33B to TK 33B	RHD01.10B-03N	Main	RO10	99UT276	0.432	0.058	Band	Yes

CHECWORKS Line Name	Component Name	Component Section	Period	Report Number	Tinit orTnom (in.)	Wear (in.)	Method	In LCF Calc (Yes/No)
RHD-01 .10B_2 TK33B to B HDR	RHD01 .10B-27P	Entered as D/S Ext ofRHD01.10B-26F	R013	05UT074	0.432	0.031	Band	Yes
RHD-01.10B_2 TK33B to B HDR	RHD01 .10B-27P	Entered as U/S Ext ofRHD01.10B-28E	R013	05UT074	0.432	0.027	Band	No(1)
RHD-01.10B_2 TK33B to B HDR	RHD01.10B-28E	Main	R013	05UT074	0.432	0.180	Blanket	Yes
RHD-01.10B_2 TK33B to B HDR	RHD01 .10B-29P	Entered as D/S Ext ofRHD01.10B-28E	R013	05UT074	0.432	0.098	Band	Yes
RHD-01.10B_2 TK33B to B HDR	RHD01.10B-52T	U/S Main	RO10	99UT268	0.432	0.119	Blanket	No (6)
RHD-01.10B_2 TK33B to B HDR	RHD01.10B-52T	D/S Main	RO10	99UT268	0.432	0.119	Blanket	Yes
RHD-01.10B_2 TK33B to B HDR	RHD01.10B-52T	Branch	RO10	99UT268	0.432	0.144	Blanket	Yes
RHD-01.10B_2 TK33B to B HDR	RHD01.10B-52T	U/S Ext.	RO10	99UT268	0.432	0.031	Band	No (2)
RHD-01.10B_2 TK33B to B HDR	RHD01.10B-52T	Branch Ext.	RO10	99UT268	0.432	0.038	Band	No (2)
RHD-01.10B_2 TK33B to B HDR	RHD01.10B-53P	Entered as D/S Ext. ofRHD01.10B-52T	RO10	99UT268	0.432	0.051	Band	Yes
RHD-01 .10B_2 TK33B to B HDR	RHD02.5B-01V	Main	RO10	99UT149	0.337	0.097	Point toPoint	No (10)
RHD-01 .10B_2 TK33B to B HDR	RHD02.5B-01V	Main	RO8		0.337	0.035	Band	No (10)
RHD-01 .10B_2 TK33B to B HDR	RHD02.5B-01V	Main	RO9	97UT052	0.337	0.053	Band	No (10)
RHD-01 .10B_2 TK33B to B HDR	RHD02.5B-02R	U/S Main	RO10	99UT149	0.337	0.154	Point toPoint	No (3)

CHECWORKS Line Name	Component Name	Component Section	Period	Report Number	Tinit orTnom (in.)	Wear (in.)	Method	In LCF Calc (Yes/No)
RHD-01 .10B_2 TK33B to B HDR	RHD02.5B-02R	D/S Main	RO10	99UT149	0.500	0.303	Point toPoint	No (3)
RHD-01 .10B_2 TK33B to B HDR	RHD02.5B-02R	U/S Main	RO11	01 UT081	0.337	0.095	Band	Yes
RHD-01 .10B_2 TK33B to B HDR	RHD02.5B-02R	D/S Main	RO11	01UT081	0.500	0.135	Band	No (3)
RHD-01 .10B_2 TK33B to B HDR	RHD02.5B-02R	U/S Main	RO12	03UT029	0.337	0.051	Band	Yes
RHD-01 .10B_2 TK33B to B HDR	RHD02.5B-02R	D/S Main	RO12	03UT029	0.500	0.077	Band	Yes
RHD-01 .10B_2 TK33B to B HDR	RHD02.5B-02R	D/S Main	RO8		0.500	0.194	Band	No (3)
RHD-01 .10B_2 TK33B to B HDR	RHD02.5B-02R	U/S Main	RO8		0.337	0.101	Band	Yes
RHD-01 .10B_2 TK33B to B HDR	RHD02.5B-02R	D/S Main	RO9	97UT052	0.500	0.190	Band	No (3)
RHD-01 .10B_2 TK33B to B HDR	RHD02.5B-02R	U/S Main	RO9	97UT052	0.337	0.105	Band	Yes
RHD-01 .10B_2 TK33B to B HDR	RHD02.6B-01E	Main	RO10	99UT150	0.559	0.210	Blanket	Yes
RHD-01 .10B_2 TK33B to B HDR	RHD02.6B-01 E	Main	RO11	01 UT080	0.559	0.217	Blanket	Yes
RHD-01 .10B_2 TK33B to B HDR	RHD02.6B-01E	Main	RO12	03UT029	0.559	0.215	Blanket	Yes
RHD-01 .10B_2 TK33B to B HDR	RHD02.6B-01E	Main	RO8		0.559	0.183	Blanket	Yes
RHD-01 .10B_2 TK33B to B HDR	RHD02.6B-01E	Main	RO9	97UT050	0.559	0.188	Blanket	Yes

CHECWORKS Line Name	Component Name	Component Section	Period	Report Number	Tinit orTnom (in.)	Wear (in.)	Method	In LCF Calc (Yes/No)
RHD-01.10B_2 TK33B to B HDR	RHD02.6B-02P	Entered as D/S Ext. ofRHD02.6B-01E	RO10	99UT150	0.528	0.104	Band	Yes
RHD-01.10B_2 TK33B to B HDR	RHD02.6B-02P	Entered as D/S Ext. ofRHD02.6B-01 E	RO11	01 UT080	0.559	0.099	Band	Yes
RHD-01.10B_2 TK33B to B HDR	RHD02.6B-02P	Entered as D/S Ext. ofRHD02.6B-01 E	RO8		0.528	0.086	Band	Yes
RHD-01.10B_2 TK33B to B HDR	RHD02.6B-02P	Entered as D/S Ext. ofRHD02.6B-01 E	RO9	97UT050	0.528	0.094	Band	Yes
RHD-01.1A_1 RH 31Ato TK 31A	RHD01.1A-01N	Main	RO11	01UT132	0.432	0.127	Band	Yes
RHD-01.1A_1 RH 31Ato TK 31A	RHD01.1A-02P	Entered as D/S Ext. ofRHD01.1A-01N	RO11	01UT132	0.432	0.088	Band	Yes
RHD-01.1A_1 RH 31Ato TK 31A	RHD01.1A-03N	Main	RO11	01UT132	0.432	0.070	Band	Yes
RHD-01.1A_2 TK 31Ato A HDR	RHD01.1A-04N	U/S Main	RO10	99UT230	0.432	0.067	Band	Yes
RHD-01.1A_2 TK 31Ato A HDR	RHD01.1A-34P_2	Entered as U/S Ext. ofRHD01.1A-35F	RO10	99UT230	0.432	0.037	Band	No (2)
RHD-01.1A_2 TK 31Ato A HDR	RHD01.1A-34P_2	Entered as U/S Ext. ofRHD01.1A-35F	RO8		0.475	0.074	Band	No (2)
RHD-01.1A_2 TK 31Ato A HDR	RHD01.1A-36P	Entered as D/S Ext. ofRHD01.1A-35F	RO8		0.462	0.033	Band	Yes
RHD-01.1A_2 TK 31Ato A HDR	RHD02.1A-01V	Main	RO10	99UT147	0.337	0.051	Band	No (10)
RHD-01.1A_2 TK 31Ato A HDR	RHD02.1A-01V	Main	RO11		0.337	N/A	N/A	No (10)

CHECWORKS Line Name	Component Name	Component Section	Period	Report Number	Tinit orTnom (in.)	Wear (in.)	Method	In LCF Calc (Yes/No)
RHD-01.1A_2 TK 31Ato A HDR	RHD02.1A-01V	Main	RO8		0.337	0.031	Band	No (10)
RHD-01.1A_2 TK 31Ato A HDR	RHD02.1A-02R	U/S Main	RO10	99UT147	0.337	0.098	Band	Yes
RHD-01 .1A_2 TK 31Ato A HDR	RHD02.1A-02R	D/S Main	RO10	99UT147	0.432	0.220	Point toPoint	No (3)
RHD-01.1A_2 TK 31Ato A HDR	RHD02.1A-02R	U/S Main	RO11	01UT079	0.337	0.089	Band	Yes
RHD-01.1A_2 TK 31Ato A HDR	RHD02.1A-02R	D/S Main	RO11	01UT079	0.432	0.168	Band	No (3)
RHD-01.1A_2 TK 31Ato A HDR	RHD02.1A-02R	U/S Main	RO8		0.337	0.161	Band	No (3)
RHD-01.1A_2 TK 31Ato A HDR	RHD02.1A-02R	D/S Main	RO8		0.432	0.085	Band	No (3)
RHD-01.1A_2 TK 31Ato A HDR	RHD02.2A-01P	Entered as D/S Ext. ofRHD02.1A-02R	RO10	99UT147	0.432	0.080	Band	Yes
RHD-01.1A_2 TK 31Ato A HDR	RHD02.2A-01P	Entered as D/S Ext. ofRHD02.1A-02R	RO11	01UT079	0.432	0.048	Band	Yes
RHD-01.1A_2 TK 31Ato A HDR	RHD02.2A-01P	Entered as D/S Ext. ofRHD02.1A-02R	RO8		0.432	0.047	Band	Yes
RHD-01.1A_2 TK 31Ato A HDR	RHD02.2A-02E	Main	RO10	99UT155	0.473	0.155	Blanket	Yes
RHD-01.1A_2 TK 31Ato A HDR	RHD02.2A-02E	Main	RO11	01UT079	0.473	0.148	Blanket	Yes
RHD-01.1A_2 TK 31Ato A HDR	RHD02.2A-02E	Main	RO8		0.473	0.077	Blanket	Yes
RHD-01.1A_2 TK 31Ato A HDR	RHD02.2A-03P	Entered as D/S Ext. ofRHD02.2A-02E	RO10	01UT079	0.432	0.114	Band	Yes

CHECWORKS Line Name	Component Name	Component Section	Period	Report Number	Tinit orTnom (in.)	Wear (in.)	Method	In LCF Calc (Yes/No)
RHD-01.1A_2 TK 31Ato A HDR	RHD02.2A-03P	Entered as D/S Ext. ofRHD02.2A-02E	RO11	99UT155	0.432	0.108	Band	Yes
RHD-01.1 B_2 TK 31 Bto B HDR	RHD01.1B-15P	Entered as DS Ext ofRHD01.1B-14F	RO13	05UT075	0.432	0.055	Band	Yes
RHD-01.1 B_2 TK 31 Bto B HDR	RHD01.1B-15P	Entered as US Ext ofRHD01.1B-16E	RO13	05UT075	0.432	0.058	Band	No(1)
RHD-01.1B_2 TK 31Bto B HDR	RHD01.1B-16E	Main	RO13	05UT075	0.432	0.162	Blanket	Yes
RHD-01 .1 B_2 TK 31 Bto B HDR	RHD01.1B-17P	Entered as DS Ext ofRHD01.1B-16E	RO13	05UT075	0.432	0.041	Band	Yes
RHD-01 .1 B_2 TK 31 Bto B HDR	RHD01.1B-29P	Entered as U/S Ext. ofRHD01.1B-30E	RO8		0.473	0.046	Band	No (2)
RHD-01.1B_2 TK 31Bto B HDR	RHD01.1B-30E	Main	RO8		0.473	0.083	Blanket	Yes
RHD-01 .1 B_2 TK 31 Bto B HDR	RHD01.1B-31P	Entered as D/S Ext. ofRHD01.1B-30E	RO8		0.469	0.042	Band	Yes
RHD-01 .1 B_2 TK 31 Bto B HDR	RHD01 .1 B-38P_2	Entered as U/S Ext. ofRHD01.1B-39E	RO11	01UT109	0.432	0.053	Band	No (2)
RHD-01.1B_2 TK 31Bto B HDR	RHD01.1B-39E	Main	RO11	01UT109	0.432	0.074	Blanket	Yes
RHD-01 .1 B_2 TK 31 Bto B HDR	RHD01.1B-40P	Entered as D/S Ext. ofRHD01.1B-39E	RO11	01UT109	0.432	0.073	Band	Yes
RHD-01.1B_2 TK 31Bto B HDR	RHD01.1B-41E	Main	RO11	01UT109	0.432	0.057	Blanket	Yes
RHD-01 .1 B_2 TK 31 Bto B HDR	RHD01 .1 B-42P_1	Entered as D/S Ext. ofRHD01.1B-41E	RO11	01UT109	0.432	0.067	Band	Yes
RHD-01 .1 B_2 TK 31 Bto B HDR	RHD01.1B-50P	Entered as U/S Ext. ofRHD01.1B-51E	RO10	99UT174	0.432	0.064	Band	No (2)

CHECWORKS Line Name	Component Name	Component Section	Period	Report Number	Tinit orTnom (in.)	Wear (in.)	Method	In LCF Calc (Yes/No)
RHD-01.1B_2 TK 31Bto B HDR	RHD01.1B-51E	Main	RO10	99UT174	0.432	0.051	Blanket	Yes
RHD-01 .1 B_2 TK 31 Bto B HDR	RHD01.1B-52P	Entered as D/S Ext. ofRHD01.1B-51E	RO10	99UT174	0.476	0.054	Band	Yes
RHD-01 .1 B_2 TK 31 Bto B HDR	RHD01.1B-52P	Entered as D/S Ext. ofRHD01.1B-51E	RO8		0.432	0.051	T DAT	Yes
RHD-01.1B_2 TK 31Bto B HDR	RHD01.2B-01R	U/S Main	RO10	99UT174	0.432	0.047	Band	Yes
RHD-01.1B_2 TK 31Bto B HDR	RHD01.2B-01R	D/S Main	RO10	99UT174	0.401	0.052	Band	Yes
RHD-01.1B_2 TK 31Bto B HDR	RHD01.2B-01R	D/S Ext.	RO10	99UT174	0.337	0.051	Band	No (4)
RHD-01.1B_2 TK 31Bto B HDR	RHD01.2B-01R	U/S Main	RO8		0.432	0.047	T DAT	No (17)
RHD-01 .1 B_2 TK 31 Bto B HDR	RHD02.1B-01V	Main	RO10	99UT167	0.337	0.077	Point toPoint	No (10)
RHD-01.1B_2 TK 31Bto B HDR	RHD02.1B-01V	Main	RO8		0.337	0.027	Band	No (10)
RHD-01.1B_2 TK 31Bto B HDR	RHD02.1B-01V	Main	RO9	97UT051	0.337	0.043	Band	No (10)
RHD-01.1B_2 TK 31Bto B HDR	RHD02.1B-02R	U/S Main	RO10	99UT167	0.337	0.117	Band	No (3)
RHD-01 .1 B_2 TK 31 Bto B HDR	RHD02.1B-02R	D/S Main	RO10	99UT167	0.432	0.210	Point toPoint	No (3)
RHD-01.1B_2 TK 31Bto B HDR	RHD02.1B-02R	U/S Main	RO11	01UT093	0.337	0.113	Band	No (3)
RHD-01.1B_2 TK 31Bto B HDR	RHD02.1B-02R	D/S Main	RO11	01UT093	0.432	0.195	Band	No (3)

CHECWORKS Line Name	Component Name	Component Section	Period	Report Number	Tinit orTnom (in.)	Wear (in.)	Method	In LCF Calc (Yes/No)
RHD-01.1B_2 TK 31Bto B HDR	RHD02.1B-02R	D/S Main	RO8		0.432	0.176	Band	No (3)
RHD-01.1B_2 TK 31Bto B HDR	RHD02.1B-02R	U/S Main	RO8		0.337	0.120	Band	No (3)
RHD-01.1B_2 TK 31Bto B HDR	RHD02.1B-02R	D/S Main	RO9	97UT051	0.432	0.183	Band	No (3)
RHD-01.1B_2 TK 31Bto B HDR	RHD02.1B-02R	U/S Main	RO9	97UT051	0.337	0.112	Band	No (3)
RHD-01 .1 B_2 TK 31 Bto B HDR	RHD02.2B-01P	Entered as D/S Ext. ofRHD02.1B-02R	RO10	99UT167	0.432	0.042	Band	Yes
RHD-01 .1 B_2 TK 31 Bto B HDR	RHD02.2B-01 P	Entered as D/S Ext. ofRHD02.1 B-02R	RO11	01 UT093	0.432	0.040	Band	Yes
RHD-01 .1 B_2 TK 31 Bto B HDR	RHD02.2B-01P	Entered as D/S Ext. ofRHD02.1B-02R	RO8		0.432	0.042	Band	Yes
RHD-01 .1 B_2 TK 31 Bto B HDR	RHD02.2B-01P	Entered as D/S Ext. ofRHD02.1B-02R	RO9	97UT051	0.432	0.042	Band	Yes
RHD-01.1B_2 TK 31Bto B HDR	RHD02.2B-02E	Main	RO10	99UT167	0.432	0.088	Blanket	Yes
RHD-01.1B_2 TK 31Bto B HDR	RHD02.2B-02E	U/S Ext.	RO10	99UT167	0.432	0.046	Band	No (2)
RHD-01.1B_2 TK 31Bto B HDR	RHD02.2B-02E	Main	RO11	01 UT093	0.432	0.083	Blanket	Yes
RHD-01 .1 B_2 TK 31 Bto B HDR	RHD02.2B-03P	Entered as D/S Ext. ofRHD02.2B-02E	RO10	99UT167	0.432	0.118	Band	Yes
RHD-01 .1 B_2 TK 31 Bto B HDR	RHD02.2B-03P	Entered as D/S Ext. ofRHD02.2B-02E	RO11	01UT093	0.432	0.126	Band	Yes
RHD-01 .3A_2 TK 32Ato A HDR	RHD01 .4A-01P_2	Entered as U/S Ext ofRHD01.5A-01R	RO12	03UT129	0.500	0.073	Band	No(2)

CHECWORKS Line Name	Component Name	Component Section	Period	Report Number	Tinit orTnom (in.)	Wear (in.)	Method	In LCF Calc (Yes/No)
RHD-01 .3A_2 TK 32Ato A HDR	RHD01.5A-01R	U/S Main	RO12	03UT129	0.500	0.109	Band	Yes
RHD-01 .3A_2 TK 32Ato A HDR	RHD01.5A-01R	D/S Main	RO12	03UT129	0.432	0.154	Band	Yes
RHD-01 .3A_2 TK 32Ato A HDR	RHD01.5A-02P	Entered as D/S Ext ofRHD01.5A-01R	RO12	03UT129	0.432	0.083	Band	Yes
RHD-01 .3A_2 TK 32Ato A HDR	RHD01.5A-02P	Entered as U/S Ext ofRHD01.5A-03F	RO12	03UT129	0.432	0.046	Band	No(2)
RHD-01 .3A_2 TK 32Ato A HDR	RHD01.5A-04P	Entered as D/S Ext ofRHD01.5A-03F	RO12	03UT128	0.432	0.053	Band	Yes
RHD-01 .3A_2 TK 32Ato A HDR	RHD01.5A-04P	Entered as U/S Ext ofRHD01.5A-05R	RO12	03UT128	0.432	0.043	Band	No(2)
RHD-01 .3A_2 TK 32Ato A HDR	RHD01.5A-05R	U/S Main	RO12	03UT128	0.432	0.057	Band	Yes
RHD-01 .3A_2 TK 32Ato A HDR	RHD01.5A-05R	D/S Main	RO12	03UT128	0.500	0.067	Band	Yes
RHD-01 .3A_2 TK 32Ato A HDR	RHD01.6A-01P	Entered as D/S Ext ofRHD01.5A-05R	RO12	03UT128	0.500	0.065	Band	Yes
RHD-01 .3A_2 TK 32Ato A HDR	RHD01 .7A-04E	Main	RO10	99UT1 73	0.458	0.060	Blanket	Yes
RHD-01 .3A_2 TK 32Ato A HDR	RHD01.7A-04E	U/S Ext.	RO10	99UT173	0.432	0.075	Band	No (2)
RHD-01 .3A_2 TK 32Ato A HDR	RHD01 .7A-04E	Main	RO8		0.458	0.051	Blanket	Yes
RHD-01 .3A_2 TK 32Ato A HDR	RHD01.8A-01R	U/S Main	RO10	99UT173	0.432	0.133	Point toPoint	Yes
RHD-01 .3A_2 TK 32Ato A HDR	RHD01.8A-01R	D/S Main	RO10	99UT173	0.337	0.135	Point toPoint	Yes

CHECWORKS Line Name	Component Name	Component Section	Period	Report Number	Tinit orTnom (in.)	Wear (in.)	Method	In LCF Calc (Yes/No)
RHD-01 .3A_2 TK 32Ato A HDR	RHD01 .8A-01 R	U/S Main	RO8		0.432	0.085	Band	Yes
RHD-01 .3A_2 TK 32Ato A HDR	RHD01 .8A-01 R	D/S Main	RO8		0.337	0.085	Band	Yes
RHD-01 .3A_2 TK 32Ato A HDR	RHD01.8A-02P	Entered as D/S Ext. ofRHD01.8A-01R	RO10	99UT173	0.376	0.097	Point toPoint	Yes
RHD-01 .3A_2 TK 32Ato A HDR	RHD01 .8A-02P	Entered as D/S Ext. ofRHD01 .8A-01 R	RO8		0.376	0.054	Band	Yes
RHD-01 .3A_2 TK 32Ato A HDR	RHD02.3A-01V	Main	RO10	99UT166	0.337	0.159	Band	No (10)
RHD-01 .3A_2 TK 32Ato A HDR	RHD02.3A-01V	U/S Ext.	RO10	99UT173	0.337	0.065	Band	No (10)
RHD-01 .3A_2 TK 32Ato A HDR	RHD02.3A-01V	Main	RO8		0.337	0.070	Band	No (10)
RHD-01 .3A_2 TK 32Ato A HDR	RHD02.3A-02R	U/S Main	RO10	99UT166	0.337	0.100	Band	Yes
RHD-01 .3A_2 TK 32Ato A HDR	RHD02.3A-02R	D/S Main	RO10	99UT166	0.432	0.223	Band	No (3)
RHD-01 .3A_2 TK 32Ato A HDR	RHD02.3A-02R	D/S Main	RO8		0.432	0.198	Band	No (3)
RHD-01 .3A_2 TK 32Ato A HDR	RHD02.3A-02R	U/S Main	RO8		0.337	0.089	Band	No (3)
RHD-01 .3A_2 TK 32Ato A HDR	RHD02.4A-01P	Entered as D/S Ext. ofRHD02.3A-02R	RO10	99UT166	0.432	0.065	Band	Yes
RHD-01 .3A_2 TK 32Ato A HDR	RHD02.4A-01 P	Entered as D/S Ext. ofRHD02.3A-02R	RO8		0.432	0.047	Band	Yes
RHD-01 .3A_2 TK 32Ato A HDR	RHD02.4A-02E	Main	RO8		0.473	0.054	Blanket	Yes

CHECWORKS Line Name	Component Name	Component Section	Period	Report Number	Tinit orTnom (in.)	Wear (in.)	Method	In LCF Calc (Yes/No)
RHD-01.3B_1 RH 32Bto TK 32B	RHD01.3B-01N	Main	RO9	97UT120	0.432	0.084	Band	Yes
RHD-01 .3B_1 RH 32Bto TK 32B	RHD01.3B-02P	Entered as D/S Ext. ofRHD01.3B-01N	RO9	97UT120	0.432	0.050	Band	Yes
RHD-01.3B_1 RH 32Bto TK 32B	RHD01.3B-03N	Main	RO9	97UT123	0.432	0.066	Band	Yes
RHD-01 .3B_2 TK 32Bto B HDR	RHD01.3B-04N	Main	RO12	03UT074	0.432	0.074	Band	Yes
RHD-01 .3B_2 TK 32Bto B HDR	RHD01.3B-05P	Entered as D/S Ext ofRHD01.3B-04N	RO12	03UT074	0.432	0.039	Band	Yes
RHD-01 .3B_2 TK 32Bto B HDR	RHD01.3B-06E	Main	RO10	99UT251	0.432	0.131	Blanket	Yes
RHD-01 .3B_2 TK 32Bto B HDR	RHD01.3B-06E	U/S Ext.	RO10	99UT252	0.432	0.050	Band	No (2)
RHD-01 .3B_2 TK 32Bto B HDR	RHD01.3B-07P	Entered as D/S Ext. ofRHD01.3B-06E	RO10	99UT251	0.432	0.047	Band	Yes
RHD-01 .3B_2 TK 32Bto B HDR	RHD01.3B-08E	Main	RO10	99UT245	0.432	0.041	Blanket	Yes
RHD-01 .3B_2 TK 32Bto B HDR	RHD01.3B-08E	U/S Ext.	RO10	99UT245	0.432	0.061	Band	No (2)
RHD-01 .3B_2 TK 32Bto B HDR	RHD01.3B-09P	Entered as D/S Ext. ofRHD01.3B-08E	RO10	99UT245	0.432	0.053	Band	Yes
RHD-01 .3B_2 TK 32Bto B HDR	RHD01.3B-09P	Entered as U/S Ext ofRHD01.3B-10E	RO12	03UT119	0.432	0.040	Band	No(2)
RHD-01 .3B_2 TK 32Bto B HDR	RHD01.3B-10E	Main	RO12	03UT119	0.432	0.056	Blanket	Yes

CHECWORKS Line Name	Component Name	Component Section	Period	Report Number	Tinit orTnom (in.)	Wear (in.)	Method	In LCF Calc (Yes/No)
RHD-01 .3B_2 TK 32Bto B HDR	RHD01.3B-11P	Entered as D/S Ext ofRHD01.3B-10E	RO12	03UT119	0.432	0.036	Band	Yes
RHD-01 .3B_2 TK 32Bto B HDR	RHD01.3B-11P	Entered as U/S Ext ofRHD01.3B-12E	RO12	03UT119	0.432	0.041	Band	No(2)
RHD-01 .3B_2 TK 32Bto B HDR	RHD01.3B-12E	Main	RO12	03UT119	0.432	0.066	Blanket	Yes
RHD-01 .3B_2 TK 32Bto B HDR	RHD01.3B-13P	Entered as D/S Ext ofRHD01.3B-12E	RO12	03UT119	0.432	0.041	Band	Yes
RHD-01 .3B_2 TK 32Bto B HDR	RHD01.3B-13P	Entered as U/S Ext ofRHD01.3B-14E	RO12	03UT119	0.432	0.047	Band	No(2)
RHD-01 .3B_2 TK 32Bto B HDR	RHD01.3B-14E	Main	RO12	03UT119	0.432	0.085	Blanket	Yes
RHD-01 .3B_2 TK 32Bto B HDR	RHD01.3B-15P	Entered as U/S Ext. ofRHD01.3B-16E	RO11	01UT100	0.432	0.046	Band	No (2)
RHD-01 .3B_2 TK 32Bto B HDR	RHD01.3B-15P	Entered as D/S Ext ofRHD01.3B-14E	RO12	03UT119	0.432	0.067	Band	Yes
RHD-01 .3B_2 TK 32Bto B HDR	RHD01.3B-16E	Main	RO11	01UT100	0.432	0.111	Blanket	Yes
RHD-01.3B_2 TK 32Bto B HDR	RHD01.3B-17P	Entered as D/S Ext. ofRHD01.3B-16E	RO11	01UT100	0.432	0.054	Band	Yes
RHD-01 .3B_2 TK 32Bto B HDR	RHD01.3B-18E	Main	RO11	01UT100	0.432	0.097	Blanket	Yes
RHD-01 .3B_2 TK 32Bto B HDR	RHD01.3B-19P	Entered as D/S Ext. ofRHD01.3B-18E	RO11	01UT100	0.432	0.069	Band	Yes
RHD-01 .3B_2 TK 32Bto B HDR	RHD01.3B-20R	U/S Main	RO11	01UT100	0.432	0.099	Band	Yes
RHD-01 .3B_2 TK 32Bto B HDR	RHD01.3B-20R	D/S Main	RO11	01UT100	0.594	0.104	Band	Yes

CHECWORKS Line Name	Component Name	Component Section	Period	Report Number	Tinit orTnom (in.)	Wear (in.)	Method	In LCF Calc (Yes/No)
RHD-01 .3B_2 TK 32Bto B HDR	RHD01 .4B-01P_1	Entered as D/S Ext. ofRHD01.3B-20R	RO11	01UT100	0.594	0.059	Band	Yes
RHD-01 .3B_2 TK 32Bto B HDR	RHD01.5B-02P	Entered as U/S Ext. ofRHD01.5B-03F	RO8		0.458	0.135	Band	No (2)
RHD-01 .3B_2 TK 32Bto B HDR	RHD01.5B-04P	Entered as DS Ext ofRHD01.5B-03F	RO13	05UT082	0.432	0.049	Band	Yes
RHD-01 .3B_2 TK 32Bto B HDR	RHD01.5B-04P	Entered as US Ext ofRHD01.5B-05R	RO13	05UT082	0.432	0.064	Band	No(1)
RHD-01 .3B_2 TK 32Bto B HDR	RHD01 .5B-04P	Entered as D/S Ext. ofRHD01 .5B-03F	RO8		0.475	0.070	Band	Yes
RHD-01 .3B_2 TK 32Bto B HDR	RHD01.5B-05R	US Main	RO13	05UT082	0.432	0.111	Band	Yes
RHD-01 .3B_2 TK 32Bto B HDR	RHD01.5B-05R	DS Main	RO13	05UT082	0.594	0.106	Band	Yes
RHD-01 .3B_2 TK 32Bto B HDR	RHD01 .5B-05R	D/S Main	RO8		0.594	0.093	Band	Yes
RHD-01 .3B_2 TK 32Bto B HDR	RHD01.5B-05R	U/S Main	RO8		0.432	0.182	Band	No (3)
RHD-01 .3B_2 TK 32Bto B HDR	RHD01.6B-01P	Entered as DS Ext ofRHD01.5B-05R	RO13	05UT082	0.634	0.073	Band	Yes
RHD-01 .3B_2 TK 32Bto B HDR	RHD01.6B-01P	Entered as US Ext ofRHD01.6B-02E	RO13	05UT082	0.594	0.060	Band	No(1)
RHD-01.3B_2 TK 32Bto B HDR	RHD01 .6B-01P	Entered as D/S Ext. ofRHD01 .5B-05R	RO8		0.634	0.073	Band	Yes
RHD-01.3B_2 TK 32Bto B HDR	RHD01.6B-02E	Main	RO13	05UT082	0.594	0.086	Blanket	Yes
RHD-01.3B_2 TK 32Bto B HDR	RHD01 .6B-03P_1	Entered as DS Ext ofRHD01.6B-02E	RO13	05UT082	0.594	0.132	Band	Yes

CHECWORKS Line Name	Component Name	Component Section	Period	Report Number	Tinit orTnom (in.)	Wear (in.)	Method	In LCF Calc (Yes/No)
RHD-01 .3B_2 TK 32Bto B HDR	RHD01.7B-03R	U/S Main	RO10	99UT277	0.432	0.311	Band	No(3)
RHD-01.3B_2 TK 32Bto B HDR	RHD01.7B-03R	D/S Main	RO10	99UT277	0.594	0.079	Band	Yes
RHD-01.3B_2 TK 32Bto B HDR	RHD01.7B-03R	U/S Ext.	RO10	99UT277	0.432	0.044	Band	No (2)
RHD-01.3B_2 TK 32Bto B HDR	RHD01 .8B-01 P_1	Entered as D/S Ext. ofRHD01.7B-03R	RO10	99UT277	0.594	0.076	Band	Yes
RHD-01.3B_2 TK 32Bto B HDR	RHD01 .8B-06E	Main	RO9	97UT073	0.594	0.087	Blanket	Yes
RHD-01.3B_2 TK 32Bto B HDR	RHD01 .9B-01R	U/S Main	RO9	97UT073	0.594	0.067	Band	Yes
RHD-01.3B_2 TK 32Bto B HDR	RHD01 .9B-01R	D/S Main	RO9	97UT073	0.337	0.202	Band	Yes
RHD-01.3B_2 TK 32Bto B HDR	RHD02.3B-01V	Main	RO8		0.337	0.042	Band	No (10)
RHD-01.3B_2 TK 32Bto B HDR	RHD02.3B-01V	Main	RO9	97UT073	0.337	0.063	Band	No (10)
RHD-01.3B_2 TK 32Bto B HDR	RHD02.3B-02R	U/S Main	RO11	01 UT097	0.337	0.083	Band	Yes
RHD-01.3B_2 TK 32Bto B HDR	RHD02.3B-02R	D/S Main	RO11	01 UT097	0.594	0.227	Band	Yes
RHD-01.3B_2 TK 32Bto B HDR	RHD02.3B-02R	U/S Main	RO12	03UT027	0.337	0.072	Band	Yes
RHD-01.3B_2 TK 32Bto B HDR	RHD02.3B-02R	D/S Main	RO12	03UT027	0.594	0.230	Band	No(3)
RHD-01.3B_2 TK 32Bto B HDR	RHD02.3B-02R	D/S Main	RO8		0.594	0.226	Band	No (3)

CHECWORKS Line Name	Component Name	Component Section	Period	Report Number	Tinit orTnom (in.)	Wear (in.)	Method	In LCF Calc (Yes/No)
RHD-01.3B_2 TK 32Bto B HDR	RHD02.3B-02R	U/S Main	RO8		0.337	0.104	Band	No (3)
RHD-01.3B_2 TK 32Bto B HDR	RHD02.4B-01P	Entered as D/S Ext. ofRHD02.3B-02R	RO11	01UT097	0.594	0.107	Band	Yes
RHD-01.3B_2 TK 32Bto B HDR	RHD02.4B-01P	Entered as D/S Ext ofRHD02.3B-02R	RO12	03UT027	0.594	0.111	Band	Yes
RHD-01.3B_2 TK 32Bto B HDR	RHD02.4B-01P	Entered as D/S Ext. ofRHD02.3B-02R	RO8		0.594	0.055	Band	Yes
RHD-01 .3B_2 TK 32Bto B HDR	RHD02.4B-02E	Main	RO11	01UT097	0.594	0.151	Blanket	Yes
RHD-01 .3B_2 TK 32Bto B HDR	RHD02.4B-02E	Main	RO8		0.594	0.126	Blanket	No (8)
RHD-01 .3B_2 TK 32Bto B HDR	RHD02.4B-03P	Entered as D/S Ext. ofRHD02.4B-02E	RO11	01 UT097	0.594	0.056	Band	Yes
RHD-01 .3B_2 TK 32Bto B HDR	RHD02.4B-07P	Entered as Br Ext. ofRHD02.7B-08L	RO8		0.609	0.054	Band	No (2)
RHD-02.10B B HDR toFWH 36A	RHD02.10B-14T	U/S Main	RO13	05UT073	0.432	0.213	Band	Yes
RHD-02.10B B HDR toFWH 36A	RHD02.10B-14T	D/S Main	RO13	05UT073	0.432	0.281	Band	Yes
RHD-02.10B B HDR toFWH 36A	RHD02.10B-14T	Branch	RO13	05UT073	0.432	0.295	Band	Yes
RHD-02.10B B HDR toFWH 36A	RHD02.10B-16T	U/S Main	RO13	05UT073	0.432	0.220	Band	Yes
RHD-02.10B B HDR toFWH 36A	RHD02.10B-16T	D/S Main	RO13	05UT073	0.432	0.196	Band	Yes
RHD-02.10B B HDR toFWH 36A	RHD02.10B-16T	Branch	RO13	05UT073	0.432	0.248	Band	Yes

CHECWORKS Line Name	Component Name	Component Section	Period	Report Number	Tinit orTnom (in.)	Wear (in.)	Method	In LCF Calc (Yes/No)
RHD-02.10B B HDR toFWH 36A	RHD02.10B-17R	U/S Main	RO13	05UT073	0.432	0.112	Band	Yes
RHD-02.10B B HDR toFWH 36A	RHD02.10B-17R	D/S Main	RO13	05UT073	0.500	0.141	Band	Yes
RHD-02.1 1A A HDR toFWH 36A	RHD02.1 1A-16P	Entered as U/S Ext. ofRHD02.11A-17T	RO8		0.489	0.066	Band	No (2)
RHD-02.11A A HDR toFWH 36A	RHD02.11A-17T	U/S Main	RO8		0.432	0.120	Blanket	Yes
RHD-02.11A A HDR toFWH 36A	RHD02.11A-17T	D/S Main	RO8		0.432	0.097	Blanket	No (6)
RHD-02.11A A HDR toFWH 36A	RHD02.11A-17T	Branch	RO8		0.432	0.062	Blanket	Yes
RHD-02.1 1A A HDR toFWH 36A	RHD02.1 1A-18P	Entered as Br Ext. ofRHD02.11A-17T	RO8		0.473	0.066	Band	No (2)
RHD-02.13A A HDR toFWH 36B	RHD02.13A-03P	Entered as U/S Ext. ofRHD02.13A-04E	RO11	01UT033	0.432	0.043	Band	No (2)
RHD-02.13A A HDR toFWH 36B	RHD02.13A-03P	Entered as U/S Ext. ofRHD02.13A-04E	RO9	97UT180	0.432	0.033	Band	No (2)
RHD-02.13A A HDR toFWH 36B	RHD02.13A-04E	Main	RO11	01 UT033	0.432	0.045	Blanket	Yes
RHD-02.13A A HDR toFWH 36B	RHD02.13A-04E	Main	RO9	97UT180	0.432	0.050	Blanket	Yes
RHD-02.13A A HDR toFWH 36B	RHD02.13A-05E	Main	RO11	01 UT054	0.432	0.086	Blanket	Yes
RHD-02.13A A HDR toFWH 36B	RHD02.13A-05E	Main	RO9	97UT181	0.432	0.087	Blanket	Yes
RHD-02.13A A HDR toFWH 36B	RHD02.13A-06P_1	Entered as D/S Ext. ofRHD02.13A-05E	RO11	97UT181	0.432	0.042	Band	Yes

CHECWORKS Line Name	Component Name	Component Section	Period	Report Number	Tinit orTnom (in.)	Wear (in.)	Method	In LCF Calc (Yes/No)
RHD-02.13A A HDR toFWH 36B	RHD02.13A-06P_1	Entered as D/S Ext. ofRHD02.13A-05E	RO9	01UT053	0.432	0.042	Band	Yes
RHD-02.7B TK B HDRto FWH 36	RHD02.7B-07P	Entered as U/S Ext. ofRHD02.7B-08L	RO8		0.543	0.054	Band	No (2)
RHD-02.8B TK B HDRto FWH 36	RHD02.7B-08L	U/S Main	RO8		0.605	0.046	Band	Yes
RHD-02.8B TK B HDRto FWH 36	RHD02.7B-08L	D/S Main	RO8		0.605	0.054	Band	Yes
RHD-02.8B TK B HDRto FWH 36	RHD02.7B-08L	Branch	RO8		0.500	0.031	Band	No(9)
RHD-02.8B TK B HDRto FWH 36	RHD02.8B-01 P	Entered as D/S Ext. ofRHD02.7B-08L	RO8		0.609	0.058	Band	Yes
CD-02.3 FWH 32 OUT HDR	CD-02.1C-12T	CD-02.1C-12T	RO14		0.688	0.043	Max BAND	Yes
CD-02.3 FWH 32 OUT HDR	CD-02.1C-12T	CD-02.1C-12T-BR	RO14		0.438	0.064	Max BAND	Yes
CD-02.3 FWH 32 OUT HDR	CD-02.1C-12T	CD-02.1C-12T-DSX	RO14		0.688	0.047	Max BAND	Yes
CD-02.8B HDR to FWH 33B	CD-02.8B-01P	CD-02.8B-01P	RO14		0.438	0.072	Max BAND	Yes
CD-02.8B HDR to FWH 33B	CD-02.8B-02E	CD-02.8B-02E	RO14		0.438	0.238	Max BAND	Yes
CD-02.8B HDR to FWH 33B	CD-02.8B-02E	CD-02.8B-02E-DSX	RO14		0.438	0.097	Max BAND	Yes
CD-02.8C HDR to FWH 33C	CD-02.8C-02E	CD-02.8C-02E	RO14		0.438	0.089	Max PTP	Yes
CD-02.8C HDR to FWH 33C	CD-02.8C-02E	CD-02.8C-02E-DSX	RO14		0.438	0.035	Max PTP	Yes

CHECWORKS Line Name	Component Name	Component Section	Period	Report Number	Tinit orTnom (in.)	Wear (in.)	Method	In LCF Calc (Yes/No)
CD-03.1C FWH 33C to FWH 34C	CD-03.1C-01N	CD-03.1C-01N	RO14		0.438	0.084	Max BAND	Yes
CD-03.1C FWH 33C to FWH 34C	CD-03.1C-02E	CD-03.1C-02E	RO14		0.438	0.083	BLANKET	Yes
CD-04.1A FWH 34A to FWH 35A	CD-04.1A-04P	CD-04.1A-04P	RO14		0.438	0.096	Max BAND	Yes
CD-04.1C FWH 34C to FWH 35C	CD-04.1C-01N	CD-04.1C-01N	RO14		0.438	0.060	Max BAND	Yes
CD-04.1C FWH 34C to FWH 35C	CD-04.1C-05E	CD-04.1C-05E	RO14		0.438	0.079	BLANKET	Yes
CD-04.1C FWH 34C to FWH 35C	CD-04.1C-05E	CD-04.1C-05E-DSX	RO14		0.438	0.044	Max BAND	Yes
CD-04.1C FWH 34C to FWH 35C	CD-04.1C-05E	CD-04.1C-05E-USX	RO14		0.438	0.067	Max BAND	No(2)
CD-04.1C FWH 34C to FWH 35C	CD-04.1C-07E	CD-04.1C-07E	RO14		0.438	0.073	BLANKET	Yes
CD-04.1C FWH 34C to FWH 35C	CD-04.1C-07E	CD-04.1C-07E-DSX	RO14		0.438	0.080	Max BAND	Yes
CD-05.1B FWH 35B to HDR	CD-05.1B-03E	CD-05.1B-03E-DSX	RO14		0.438	0.073	Max BAND	Yes
CD-06.2B HDR to BFP 32	CD-06.3B-02N	CD-06.3B-02N	RO14		0.562	0.417	Max BAND	Yes
EX-01.5A HP EX HDR to FWH 36A	EX-01.5A-15N	EX-01.5A-15N	RO14		0.309	0.165	Max BAND	Yes
EX-01.5B HP EX HDR to FWH 36B	EX-01.5B-13N	EX-01.5B-13N	RO14		0.309	0.196	Max BAND	Yes
EX-01.5C HP EX HDR to FWH 36C	EX-01.5C-13N	EX-01.5C-13N	RO14		0.309	0.157	Max BAND	Yes

CHECWORKS Line Name	Component Name	Component Section	Period	Report Number	Tinit orTnom (in.)	Wear (in.)	Method	In LCF Calc (Yes/No)
EX-02.14 FWH 35 HEADER	EX-02.14-02E	EX-02.14-02E	RO14		0.375	0.049	BLANKET	Yes
EX-02.14 FWH 35 HEADER	EX-02.14-06E	EX-02.14-06E	RO14		0.375	0.223	BLANKET	Yes
EX-02.14 FWH 35 HEADER	EX-02.14-07P	EX-02.14-07P	RO14		0.375	0.033	Max BAND	Yes
EX-02.14 FWH 35 HEADER	EX-02.14-08E	EX-02.14-08E	RO14		0.375	0.211	BLANKET	Yes
EX-02.14 FWH 35 HEADER	EX-02.14-08E	EX-02.14-08E-DSX	RO14		0.375	0.026	Max BAND	No(1)
EX-03.1A LP EXT 12 to FWH 34A	EX-03.1A-14E	EX-03.1A-14E	RO14		0.250	0.098	BLANKET	Yes
EX-03.1A LP EXT 12 to FWH 34A	EX-03.1A-14E	EX-03.1A-14E-DSX	RO14		0.250	0.020	Max BAND	No(1)
EX-03.1A LP EXT 12 to FWH 34A	EX-03.1A-14E	EX-03.1A-14E-USX	RO14		0.250	0.023	Max BAND	No(2)
EX-04.11 LPEX FWH 33B IN HDR	EX-04.11-08E	EX-04.11-08E	RO14		0.313	0.087	BLANKET	Yes
EX-04.11 LPEX FWH 33B IN HDR	EX-04.11-08E	EX-04.11-08E-USX	RO14		0.313	0.075	Max BAND	No(2)
EX-04.13 LP EXT 32 to FWH 33B	EX-04.13-07T	EX-04.13-07T	RO14		0.250	0.036	Max BAND	Yes

CHECWORKS Line Name	Component Name	Component Section	Period	Report Number	Tinit orTnom (in.)	Wear (in.)	Method	In LCF Calc (Yes/No)
EX-04.13 LP EXT 32 to FWH 33B	EX-04.13-07T	EX-04.13-07T-BR	RO14		0.154	0.007	SCAN/RT/VT	No(1)
EX-04.4 LPEX FWH 33A IN HDR	EX-04.2-09T	EX-04.2-09T	RO14		0.313	0.050	Max BAND	Yes
EX-04.4 LPEX FWH 33A IN HDR	EX-04.2-09T	EX-04.2-09T-BR	RO14		0.250	0.075	Max BAND	Yes
EX-04.21 LP EXT 31 to FWH 33C	EX-04.21-01R	EX-04.21-01R-DSX	RO14		0.250	0.098	SCAN/RT/VT	Yes
EX-04.4 LPEX FWH 33A IN HDR	EX-04.4-08E	EX-04.4-08E	RO14		0.313	0.094	BLANKET	Yes
EX-04.4 LPEX FWH 33A IN HDR	EX-04.4-08E	EX-04.4-08E-USX	RO14		0.313	0.027	Max BAND	No(2)
EX-04.6 LP EXT to FWH 33A	EX-04.6-06N	EX-04.6-06N	RO14		0.375	0.077	Max BAND	Yes
EX-05.1C LP EXT 16 to FWH 32C	EX-05.1C-04N	EX-05.1C-04N	RO14		0.375	0.086	SCAN/RT/VT	Yes
EX-05.2C LP EXT 15 to FWH 32C	EX-05.2C-06N	EX-05.2C-06N	RO14		0.375	0.032	SCAN/RT/VT	Yes
FW-01.3 BFP DISCHARGE HDR	FW-01.3-13P	FW-01.3-13P	RO14		1.260	0.025	Max BAND	No(1)

CHECWORKS Line Name	Component Name	Component Section	Period	Report Number	Tinit orTnom (in.)	Wear (in.)	Method	In LCF Calc (Yes/No)
FW-01.3 BFP DISCHARGE HDR	FW-01.3-14E	FW-01.3-14E	RO14		1.260	0.196	BLANKET	Yes
FW-01.6A BFP HDR to FWH 36A	FW-01.6A-12N	FW-01.6A-12N	RO14		0.938	0.101	Max BAND	Yes
FW-01.6C BFP HDR to FWH 36C	FW-01.6C-10N	FW-01.6C-10N	RO14		0.938	0.051	Max BAND	Yes
FW-02.1A FWH 36A to SG HDR	FW-02.1A-01N	FW-02.1A-01N	RO14		0.938	0.000		No(1)
FW-02.1A FWH 36A to SG HDR	FW-02.1A-02E	FW-02.1A-02E	RO14		0.938	0.115	BLANKET	Yes
FW-02.1A FWH 36A to SG HDR	FW-02.1A-03P	FW-02.1A-03P	RO14		0.938	0.064	Max BAND	Yes
FW-02.1A FWH 36A to SG HDR	FW-02.1A-04E	FW-02.1A-04E	RO14		0.938	0.183	BLANKET	Yes
FW-02.4 SG INLET HEADER	FW-02.4-11E	FW-02.4-11E	RO14		1.260	0.206	BLANKET	Yes
FW-02.4 SG INLET HEADER	FW-02.4-11E	FW-02.4-11E-DSX	RO14		1.260	0.026	Max BAND	No(1)
FW-02.4 SG INLET HEADER	FW-02.4-11E	FW-02.4-11E-USX	RO14		1.260	0.052	Max BAND	No(2)
FW-02.5 SG INLET HEADER	FW-02.5-03T	FW-02.5-03T	RO14		1.260	0.035	Max BAND	Yes
FW-02.8A SG HDR to SG 31	FW-02.8A-26R	FW-02.8A-26R	RO14		0.844	0.210	Max BAND	Yes
FW-02.8A SG HDR to SG 31	FW-02.8A-26R	FW-02.8A-26R-DS	RO14		0.938	0.252	Max BAND	Yes

CHECWORKS Line Name	Component Name	Component Section	Period	Report Number	Tinit orTnom (in.)	Wear (in.)	Method	In LCF Calc (Yes/No)
FW-02.8B SG HDR to SG 32	FW-02.8B-13F	FW-02.8B-13F	RO14		0.938	0.154	SCAN/R T/VT	Yes
FW-02.8B SG HDR to SG 32	FW-02.8B-13F	FW-02.8B-13F-DSX	RO14		0.938	0.075	Max BAND	Yes
FW-02.8B SG HDR to SG 32	FW-02.8B-13F	FW-02.8B-13F-USX	RO14		0.938	0.038	Max BAND	No(2)
FW-02.8B SG HDR to SG 32	FW-02.8B-25R	FW-02.8B-25R	RO14		0.938	0.234	Max BAND	Yes
FW-02.8B SG HDR to SG 32	FW-02.8B-25R	FW-02.8B-25R-DS	RO14		0.844	0.399	Max BAND	Yes
FW-02.8D SG HDR to SG 33	FW-02.8D-24R	FW-02.8D-24R	RO14		0.938	0.273	Max BAND	Yes
FW-02.8D SG HDR to SG 33	FW-02.8D-24R	FW-02.8D-24R-DS	RO14		0.844	0.460	Max BAND	Yes
FW-02.8D SG HDR to SG 33	FW-02.8D-25R	FW-02.8D-25R	RO14		0.844	0.110	Max BAND	Yes
FW-02.8D SG HDR to SG 33	FW-02.8D-25R	FW-02.8D-25R-DS	RO14		0.938	0.201	Max BAND	Yes
FW-02.8C SG HDR to SG 34	FW-03.1C-13P	FW-03.1C-13P	RO14		0.750	0.129	SCAN/R T/VT	Yes
FW-02.8D SG HDR to SG 33	FW-03.1D-08B	FW-03.1D-08B	RO14		0.750	0.315	BLANKE T	Yes
FW-02.8D SG HDR to SG 33	FW-03.1D-08B	FW-03.1D-08B-DSX	RO14		0.750	0.089	SCAN/R T/VT	Yes
HD-01.1B FWH 36B to HD TK	HD-02.1B-02R	HD-02.1B-02R	RO14		0.307	0.028	Max BAND	No(1)
HD-01.1B FWH 36B to HD TK	HD-02.1B-02R	HD-02.1B-02R-DS	RO14		0.280	0.039	Max BAND	Yes

CHECWORKS Line Name	Component Name	Component Section	Period	Report Number	Tinit orTnom (in.)	Wear (in.)	Method	In LCF Calc (Yes/No)
HD-03.1B FWH 35B to HD TK	HD-03.1B-09E	HD-03.1B-09E	RO14		0.250	0.048	BLANKET	Yes
HD-03.1B FWH 35B to HD TK	HD-03.1B-09E	HD-03.1B-09E-DSX	RO14		0.250	0.054	BLANKET	Yes
HD-03.1B FWH 35B to HD TK	HD-03.1B-09E	HD-03.1B-09E-USX	RO14		0.250	0.061	Max BAND	No(2)
HD-04.1C FWH 34C to FWH 33C	HD-05.1C-02R	HD-05.1C-02R	RO14		0.216	0.065	Max BAND	Yes
HD-04.1C FWH 34C to FWH 33C	HD-05.1C-02R	HD-05.1C-02R-DS	RO14		0.280	0.150	Max BAND	Yes
HD-09.3A FWH 32A to FWH 31A	HD-09.3A-02N	HD-09.3A-02N	RO14		0.375	0.049	Max BAND	Yes
HD-09.4A FWH 32A to FWH 31A	HD-09.4A-04N	HD-09.4A-04N	RO14		0.375	0.075	Max BAND	Yes
HD-12.2A HD PMP HDR to CD SYS	HD-12.2A-08T	HD-12.2A-08T	RO14		0.656	0.056	Max BAND	Yes
HD-12.2A HD PMP HDR to CD SYS	HD-12.2A-08T	HD-12.2A-08T-BR	RO14		0.500	0.064	Max BAND	Yes
MSD-01.1B_3 MSEP 31B to HDR	MSD-01.1B-06T	MSD-01.1B-06T	RO14		0.250	0.136	Max BAND	Yes
MSD-01.1B_3 MSEP 31B to HDR	MSD-01.1B-06T	MSD-01.1B-06T-BR	RO14		0.250	0.384	Max BAND	Yes
MSD-01.1B_3 MSEP 31B to HDR	MSD-01.1B-06T	MSD-01.1B-06T-DSX	RO14		0.250	0.043	Max BAND	Yes

CHECWORKS Line Name	Component Name	Component Section	Period	Report Number	Tinit orTnom (in.)	Wear (in.)	Method	In LCF Calc (Yes/No)
MSD-01.3B HDR to MSEP TK 31B	MSD-01.3B-03E	MSD-01.3B-03E	RO14		0.250	0.113	BLANKET	Yes
MSD-01.3B HDR to MSEP TK 31B	MSD-01.3B-03E	MSD-01.3B-03E-USX	RO14		0.250	0.042	Max BAND	No(2)
PD-01.1 PRESEP 1B DR to HDR	PD-01.2-10O	PD-01.2-10O	RO14		0.365	0.029	Max BAND	No(1)
RHD-01.3A_1 RH 32A to TK 32A	RHD01.3A-01N	RHD01.3A-01N	RO14		0.432	0.000	SCAN/RT/VT	No(1)
RHD-01.3A_1 RH 32A to TK 32A	RHD01.3A-02P	RHD01.3A-02P	RO14		0.432	0.060	Max BAND	Yes
RHD-01.3A_1 RH 32A to TK 32A	RHD01.3A-03N	RHD01.3A-03N	RO14		0.432	0.054	SCAN/RT/VT	Yes
RHD-02.10A TK A HDR to FWH 36	RHD02.10A-11T	RHD02.10A-11T	RO14		0.500	0.159	Max BAND	Yes
RHD-02.10A TK A HDR to FWH 36	RHD02.10A-11T	RHD02.10A-11T-BR	RO14		0.432	0.316	Max BAND	Yes
RHD-02.10A TK A HDR to FWH 36	RHD02.10A-11T	RHD02.10A-11T-USX	RO14		0.500	0.048	Max BAND	No(2)
RHD-02.11A A HDR to FWH 36A	RHD02.11A-19T	RHD02.11A-19T-BR-DSX	RO14		0.432	0.058	Max BAND	Yes
RHD-02.12B B HDR to FWH 36B	RHD02.12B-01P	RHD02.12B-01P	RO14		0.432	0.000		No(1)

CHECWORKS Line Name	Component Name	Component Section	Period	Report Number	Tinit orTnom (in.)	Wear (in.)	Method	In LCF Calc (Yes/No)
RHD-02.12B B HDR to FWH 36B	RHD02.12B-02E	RHD02.12B-02E	RO14		0.432	0.122	BLANKET	Yes
RHD-02.12B B HDR to FWH 36B	RHD02.12B-02E	RHD02.12B-02E-DSX	RO14		0.432	0.062	Max BAND	Yes
RHD-02.12B B HDR to FWH 36B	RHD02.12B-11T	RHD02.12B-11T	RO14		0.432	0.293	Max BAND	Yes
RHD-02.12B B HDR to FWH 36B	RHD02.12B-11T	RHD02.12B-11T-BR	RO14		0.432	0.282	Max BAND	Yes
RHD-02.12B B HDR to FWH 36B	RHD02.12B-11T	RHD02.12B-11T-BR-DSX	RO14		0.432	0.203	Max BAND	Yes
RHD-02.12B B HDR to FWH 36B	RHD02.12B-11T	RHD02.12B-11T-USX	RO14		0.432	0.189	Max BAND	No(2)
RHD-02.13A A HDR to FWH 36B	RHD02.13A-01P	RHD02.13A-01P	RO14		0.432	0.083	Max BAND	Yes
RHD-02.13A A HDR to FWH 36B	RHD02.13A-02E	RHD02.13A-02E	RO14		0.432	0.064	BLANKET	Yes
RHD-02.13A A HDR to FWH 36B	RHD02.13A-02E	RHD02.13A-02E-DSX	RO14		0.432	0.046	Max BAND	Yes
RHD-02.12B B HDR to FWH 36B	RHD02.13B-01N	RHD02.13B-01N	RO14		0.432	0.022	Max BAND	No(1)
RHD-02.12B B HDR to FWH 36B	RHD02.13B-01N	RHD02.13B-01N-USX	RO14		0.432	0.096	Max BAND	No(2)
RHD-02.13A A HDR to FWH 36B	RHD02.14A-01N	RHD02.14A-01N	RO14		0.432	0.052	Max BAND	Yes
RHD-02.13A A HDR to FWH 36B	RHD02.14A-01N	RHD02.14A-01N-USX	RO14		0.432	0.160	Max BAND	No(2)
RHD-02.14B B HDR to FWH 36C	RHD02.14B-01P	RHD02.14B-01P	RO14		0.432	0.000		No(1)

CHECWORKS Line Name	Component Name	Component Section	Period	Report Number	Tinit orTnom (in.)	Wear (in.)	Method	In LCF Calc (Yes/No)
RHD-02.14B B HDR to FWH 36C	RHD02.14B-02E	RHD02.14B-02E	RO14		0.432	0.282	BLANKET	Yes
RHD-02.14B B HDR to FWH 36C	RHD02.14B-02E	RHD02.14B-02E-DSX	RO14		0.432	0.067	Max BAND	Yes
RHD-02.14B B HDR to FWH 36C	RHD02.14B-12T	RHD02.14B-12T	RO14		0.432	0.215	Max BAND	Yes
RHD-02.14B B HDR to FWH 36C	RHD02.14B-12T	RHD02.14B-12T-BR	RO14		0.432	0.304	Max BAND	Yes
RHD-02.14B B HDR to FWH 36C	RHD02.14B-12T	RHD02.14B-12T-BR-DSX	RO14		0.432	0.261	Max BAND	Yes
RHD-02.14B B HDR to FWH 36C	RHD02.14B-12T	RHD02.14B-12T-USX	RO14		0.432	0.091	Max BAND	No(2)
RHD-02.15A A HDR to FWH 36C	RHD02.15A-02E	RHD02.15A-02E	RO14		0.432	0.393	BLANKET	Yes
RHD-02.15A A HDR to FWH 36C	RHD02.15A-02E	RHD02.15A-02E	RO14		0.432	0	Baseline	No(5)
RHD-02.15A A HDR to FWH 36C	RHD02.15A-02E	RHD02.15A-02E-DSX	RO14		0.432	0.116	Max BAND	Yes
RHD-02.15A A HDR to FWH 36C	RHD02.15A-02E	RHD02.15A-02E-USX	RO14		0.432	0.193	Max BAND	No(2)

CHECWORKS Line Name	Component Name	Component Section	Period	Report Number	Tinit orTnom (in.)	Wear (in.)	Method	In LCF Calc (Yes/No)
RHD-02.15A A HDR to FWH 36C	RHD02.15A-02E	RHD02.15A-02E-USX	RO14		0.432	0.036	Max BAND	No(2)
RHD-02.14B B HDR to FWH 36C	RHD02.15B-01N	RHD02.15B-01N	RO14		0.432	0.060	Max BAND	Yes
RHD-02.15A A HDR to FWH 36C	RHD02.16A-01N	RHD02.16A-01N	RO14		0.432	0.052	Max BAND	Yes
RHD-02.15A A HDR to FWH 36C	RHD02.16A-01N	RHD02.16A-01N-USX	RO14		0.432	0.240	Max BAND	No(2)
RHD-01.1A_2 TK 31A to A HDR	RHD02.2A-02E	RHD02.2A-02E	RO14		0.432	0.045	Max PTP	Yes
RHD-01.1A_2 TK 31A to A HDR	RHD02.2A-02E	RHD02.2A-02E-DSX	RO14		0.432	0.134	SCAN/RT/VT	Yes
RHD-01.1A_2 TK 31A to A HDR	RHD02.2A-02E	RHD02.2A-02E-USX	RO14		0.432	0.046	Max BAND	No(2)
RHD-01.1A_2 TK 31A to A HDR	RHD02.2A-04E	RHD02.2A-04E	RO14		0.432	0.066	BLANKET	Yes
RHD-01.1A_2 TK 31A to A HDR	RHD02.2A-04E	RHD02.2A-04E-DSX	RO14		0.432	0.098	Max BAND	Yes
RHD-01.3A_2 TK 32A to A HDR	RHD02.3A-02R	RHD02.3A-02R	RO14		0.337	0.170	Max BAND	Yes
RHD-01.3A_2 TK 32A to A HDR	RHD02.3A-02R	RHD02.3A-02R-DS	RO14		0.432	0.151	Max BAND	Yes
RHD-01.3A_2 TK 32A to A HDR	RHD02.3A-02R	RHD02.3A-02R-DSX	RO14		0.432	0.080	Max BAND	Yes

CHECWORKS Line Name	Component Name	Component Section	Period	Report Number	Tinit orTnom (in.)	Wear (in.)	Method	In LCF Calc (Yes/No)
RHD-01.3A_2 TK 32A to A HDR	RHD02.4A-06L	RHD02.4A-06L	RO14		0.594	0.065	Max BAND	Yes
RHD-01.3A_2 TK 32A to A HDR	RHD02.4A-06L	RHD02.4A-06L-BR	RO14		0.432	0.098	Max BAND	Yes
RHD-01.10A_2 TK 33A to A HDR	RHD02.5A-02R	RHD02.5A-02R	RO14		0.337	0.105	Max PTP	Yes
RHD-01.10A_2 TK 33A to A HDR	RHD02.5A-02R	RHD02.5A-02R-DS	RO14		0.432	0.152	Max BAND	Yes
RHD-01.10A_2 TK 33A to A HDR	RHD02.6A-02E	RHD02.6A-02E	RO14		0.432	0.030	Max PTP	Yes
RHD-01.10A_2 TK 33A to A HDR	RHD02.6A-02E	RHD02.6A-02E-DSX	RO14		0.432	0.041	Max PTP	Yes
RHD-01.10A_2 TK 33A to A HDR	RHD02.6A-02E	RHD02.6A-02E-USX	RO14		0.432	0.026	Max PTP	No(2)
RHD-01.10A_2 TK 33A to A HDR	RHD02.6A-03P	RHD02.6A-03P	RO14		0.432	0.069	Max BAND	Yes
RHD-01.10A_2 TK 33A to A HDR	RHD02.6A-03P	RHD02.6A-03P-DSX	RO14		0.432	0.039	BLANKET	Yes
RHD-02.8A TK A HDR to FWH 36	RHD02.6A-06L	RHD02.6A-06L	RO14		0.594	0.071	Max BAND	Yes
RHD-02.8A TK A HDR to FWH 36	RHD02.6A-06L	RHD02.6A-06L-BR	RO14		0.432	0.206	Max BAND	Yes
RHD-02.8B TK B HDR to FWH 36	RHD02.8B-06T	RHD02.8B-06T	RO14		0.594	0.265	Max BAND	Yes
RHD-02.8B TK B HDR to FWH 36	RHD02.8B-06T	RHD02.8B-06T-BR	RO14		0.432	0.095	Max BAND	Yes
RHD-02.8B TK B HDR to FWH 36	RHD02.8B-06T	RHD02.8B-06T-DSX	RO14		0.594	0.095	Max BAND	Yes

CHECWORKS Line Name	Component Name	Component Section	Period	Report Number	Tinit orTnom (in.)	Wear (in.)	Method	In LCF Calc (Yes/No)
RHD-02.8B TK B HDR to FWH 36	RHD02.8B-06T	RHD02.8B-06T-USX	RO14		0.594	0.085	Max BAND	No(2)
RHD-02.9A TK A HDR to FWH 36	RHD02.9A-11T	RHD02.9A-11T	RO14		0.594	0.201	Max BAND	Yes
RHD-02.9A TK A HDR to FWH 36	RHD02.9A-11T	RHD02.9A-11T-BR	RO14		0.432	0.296	Max BAND	Yes
RHD-02.9B TK B HDR to FWH 36	RHD02.9B-02T	RHD02.9B-02T	RO14		0.594	0.212	Max BAND	Yes
RHD-02.9B TK B HDR to FWH 36	RHD02.9B-02T	RHD02.9B-02T-BR	RO14		0.432	0.197	Max BAND	Yes
RHD-02.9B TK B HDR to FWH 36	RHD02.9B-02T	RHD02.9B-02T-USX	RO14		0.594	0.056	Max BAND	No(2)

In LCF Calc "No"	Description
1	EPRI recommends not to use any calculated lifetime wear less than or equal to 0.030" or 5% of Tnom.
2	CHECWORKS does not use the U/S Ext. or Br. Ext. in the calculation of the LCF.
3	The UT data readings do not provide an accurate representation of actual wear for this component.
4	CHECWORKS does not have a geometry code that accurately represents this component.
5	This inspection is a baseline inspection.
6	This section is modeled having no normal flow.
7	This wear is not indicative of FAC wear because wear readings are most likely due to manufacturing variances.
8	This component was only partially inspected and has an incomplete grid.
9	Inspection on tee or nozzle does not correlate well with inspections on other geometry types.
10	This component is an unusual geometry (valve, flange, orifice, etc.) and should not be used in calibration of the model.
11	Non-susceptible material
12	Scanned value imported for informational purposes only.
13	Two inspections were performed during the same outage. Only one was imported to CHECWORKS.
14	Inspected component is not modeled in CHECWORKS
15	No UT data package could be found for importation.
16	This component was inspected using Pulsed Eddy Current.
17	Due to a bug in CHECWORKS, inspections of tees with no data on the U/S Main are not used in the LCF
18	D/S Ext not used in LCF due to CHECWORKS bug involving downstream extensions of type14 tees
19	D/S Ext is not a pipe
20	Unable to exclude counterbore
21	Small-bore components
22	Suspicious Tnom inflating measured wear to an excessive level.

Appendix G

Water Chemistry Analysis Reports

Table of Contents

Water Treatment and Power Level	Page
Cycle 1 chemistry, 100.00% power	G-2
Cycle 2 chemistry, 100.00% power	G-4
Cycle 3 chemistry, 100% power	G-6
Cycle 4 chemistry, 100% power	G-8
Cycle 5 chemistry, 100% power	G-10
Cycle 6 chemistry, 100% power	G-12
Cycle 7 chemistry, 100% power	G-14
Cycle 8 chemistry, 100% power	G-16
Cycle 9 chemistry, 100% power	G-18
Cycle 10A chemistry, 100% power	G-20
Cycle 10B chemistry, 100% power	G-22
Cycle 11 chemistry, 100% power	G-24
Cycle 12 chemistry, 100% power	G-26
Cycle 12 chemistry, 101.12% power	G-28
Cycle 13 chemistry, 101.12% power	G-30
Cycle 14 chemistry, 104.95% power	G-32
Cycle 14 chemistry, 104.95% power*	G-34

*Estimate for Cycle 15

Company: Entergy Nuclear Operations, Inc.
Plant: Indian Point
Unit: 3
DB Name: IPEC3

Report Date/Time: 13-Nov-2007 3:24 pm
Analysis Date/Time: 12-Nov-2007 12:15 pm
CHECWORKS SFA Version 2.2 SP-1 (build 70)

Chemistry Analysis Report

Water Treatment : Cycle 1
Power Level : 100.00%
Plant Type : PWR

Chemistry Condition :

Condensate Dissolved Oxygen (ppb) :		15.670		
Concentration of 1st Constituent (ppm) :	Ammonia	0.680	, Sampling at	Final Feed Water
Concentration of 2nd Constituent (ppm) :	None	0.000	, Sampling at	Not Used
Concentration of Ammonia (ppm) :		0.000	, Sampling at	Not Used
Concentration of Hydrazine (ppb) :		20.000	, Sampling at	Final Feed Water
Hydrazine at SG (ppb) :		12.000	, Sampling at	Steam outlet
Hydrazine at MSR drain (ppb) :		24.000		
Concentration of Boron (ppm) :		0.000	, Sampling at	Not Used
Boron Injection Rate (lbm/hr) :		0.000		

Chemistry Analysis Results :

HBD Item Description	(Note 1) Cold pH	Hot pH	1st Constituent Ammonia (ppm)	2nd Constituent None (ppm)	Ammonia (ppm)	Hydrazine (ppb)	Dis. Oxy (ppb)	Vent Rate (%)	Flow Rate (Mlb/hr)	Pres (psia)	Temp (F)	Quality	Enthalpy (Btu/lb)
Blowdown Line	8.89	5.75	0.19	0.00	0.00	53.07	0.000	n/a	0.1	778.6	518.0	0.0000	-----
Main Steam Line 1	9.28	5.75	0.19	0.00	0.00	53.07	0.000	n/a	13.02415	-----	518.0	0.9999	-----
Main Steam Line 2	9.28	5.89	0.17	0.00	0.00	55.42	0.000	n/a	10.59295	340.4	429.1	0.9161	1136.9
Main Steam Line 3	9.31	6.00	0.17	0.00	0.00	22.27	0.000	n/a	9.375758	-----	390.6	0.9900	-----
Main Steam Line 4	9.31	7.62	0.18	0.00	0.00	9.62	0.000	n/a	7.205196	5.0	162.6	0.7270	858.0
HP Extraction Steam Line 1	9.28	6.06	0.16	0.00	0.00	83.03	0.000	n/a	0.92908	185.6	375.6	0.9540	1158.3
HP Extraction Steam Line 2	9.28	5.89	0.17	0.00	0.00	55.42	0.000	n/a	0.706255	340.4	429.1	0.9161	1136.9
Moisture Separator Drain Line 1	8.86	6.00	0.17	0.00	0.00	24.00	0.000	n/a	1.217196	221.9	390.6	0.0000	363.3
Reheater Steam & Drain Line 1	9.28	5.95	0.65	0.00	0.00	12.20	0.000	n/a	0.795863	644.7	494.0	0.0201	495.3
LP Extraction Steam Line 1	9.31	6.45	0.17	0.00	0.00	45.88	0.000	n/a	0.502856	65.0	298.0	0.9981	1177.4
LP Extraction Steam Line 2	9.31	6.81	0.17	0.00	0.00	34.34	0.000	n/a	0.475653	27.9	246.1	0.9557	1120.6
LP Extraction Steam Line 3	9.31	7.29	0.20	0.00	0.00	7.80	0.000	n/a	0.408297	10.7	196.5	0.6642	815.4
LP Extraction Steam Line 4	9.31	7.62	0.18	0.00	0.00	9.62	0.000	n/a	0.667055	5.0	162.6	0.7270	858.0
FWH Tube Side Line 1	9.28	6.16	0.68	0.00	0.00	20.06	0.000	0.00	13.12415	-----	423.2	0.0000	-----
FWH Tube Side Line 2	9.30	6.40	0.74	0.00	0.00	25.57	0.000	0.00	9.475758	-----	371.6	0.0000	-----
FWH Tube Side Line 3	9.30	6.86	0.74	0.00	0.00	31.54	0.000	0.00	9.475758	-----	293.6	0.0000	-----
FWH Tube Side Line 4	9.30	7.24	0.74	0.00	0.00	34.85	0.000	0.00	9.475758	-----	243.8	0.0000	-----

HBD Item Description	(Note 1) Cold pH	Hot pH	1st Constituent Ammonia (ppm)	2nd Constituent None (ppm)	Ammonia (ppm)	Hydrazine (ppb)	Dis. Oxy (ppb)	Vent Rate (%)	Flow Rate (Mlb/hr)	Pres (psia)	Temp (F)	Quality	Enthalpy (Btu/lb)
FWH Tube Side Line 5	9.30	7.73	0.74	0.00	0.00	37.34	0.000	0.00	9.475758	-----	191.8	0.0000	-----
FWH Tube Side Line 6	9.30	8.14	0.74	0.00	0.00	38.45	0.000	0.00	9.475758	-----	155.7	0.0000	-----
FWH Shell Side Line 1	9.28	6.31	0.69	0.00	0.00	12.00	0.000	n/a	1.502118	-----	386.7	0.0000	-----
FWH Shell Side Line 2	9.28	6.37	0.69	0.00	0.00	12.00	0.000	n/a	0.92908	-----	374.1	0.0000	-----
FWH Shell Side Line 3	9.31	7.19	0.75	0.00	0.00	2.74	0.000	n/a	0.502856	-----	250.0	0.0000	-----
FWH Shell Side Line 4	9.31	7.68	0.75	0.00	0.00	2.74	0.000	n/a	0.978509	-----	196.9	0.0000	-----
FWH Shell Side Line 5	9.31	8.06	0.75	0.00	0.00	2.74	0.000	n/a	1.386806	-----	162.5	0.0000	-----
FWH Shell Side Line 6	9.31	8.92	0.75	0.00	0.00	2.74	0.000	n/a	2.053861	-----	100.3	0.0000	-----
Feed Pump Steam & Drain Line 1	9.31	8.36	0.13	0.00	0.00	20.50	0.000	n/a	0.116701	1.0	101.7	0.8734	974.8
Drain Tank Drain Line 1	9.20	6.03	0.52	0.00	0.00	16.00	0.000	0.00	3.648394	403.5	445.4	0.0000	359.1

Notes:
1: For two-phase lines, the cold pH reported is for the mixture of steam and water, and the amine concentrations and hot pH are for the water phase only.
2: For Superheated steam, cold pH, hot pH and amine concentration are not reported since there is no water phase.

Company: Entergy Nuclear Operations, Inc.
Plant: Indian Point
Unit: 3
DB Name: IPEC3

Report Date/Time: 13-Nov-2007 3:24 pm
Analysis Date/Time: 12-Nov-2007 12:15 pm
CHECWORKS SFA Version 2.2 SP-1 (build 70)

Chemistry Analysis Report

Water Treatment : Cycle 2
Power Level : 100.00%
Plant Type : PWR

Chemistry Condition :

Condensate Dissolved Oxygen (ppb) :		16.430		
Concentration of 1st Constituent (ppm) :	Ammonia	0.480	, Sampling at	Final Feed Water
Concentration of 2nd Constituent (ppm) :	None	0.000	, Sampling at	Not Used
Concentration of Ammonia (ppm) :		0.000	, Sampling at	Not Used
Concentration of Hydrazine (ppb) :		20.000	, Sampling at	Final Feed Water
Hydrazine at SG (ppb) :		12.000	, Sampling at	Steam outlet
Hydrazine at MSR drain (ppb) :		24.000		
Concentration of Boron (ppm) :		0.000	, Sampling at	Not Used
Boron Injection Rate (lbm/hr) :		0.000		

Chemistry Analysis Results :

HBD Item Description	(Note 1) Cold pH	Hot pH	1st Constituent Ammonia (ppm)	2nd Constituent None (ppm)	Ammonia (ppm)	Hydrazine (ppb)	Dis. Oxy (ppb)	Vent Rate (%)	Flow Rate (Mlb/hr)	Pres (psia)	Temp (F)	Quality	Enthalpy (Btu/lb)
Blowdown Line	8.78	5.73	0.14	0.00	0.00	53.07	0.000	n/a	0.1	778.6	518.0	0.0000	-----
Main Steam Line 1	9.18	5.73	0.13	0.00	0.00	53.07	0.000	n/a	13.02415	-----	518.0	0.9999	-----
Main Steam Line 2	9.18	5.84	0.13	0.00	0.00	55.42	0.000	n/a	10.59295	340.4	429.1	0.9161	1136.9
Main Steam Line 3	9.21	5.94	0.13	0.00	0.00	22.27	0.000	n/a	9.375758	-----	390.6	0.9900	-----
Main Steam Line 4	9.21	7.55	0.14	0.00	0.00	9.62	0.000	n/a	7.205196	5.0	162.6	0.7270	858.0
HP Extraction Steam Line 1	9.18	6.01	0.12	0.00	0.00	83.03	0.000	n/a	0.92908	185.6	375.6	0.9540	1158.3
HP Extraction Steam Line 2	9.18	5.84	0.13	0.00	0.00	55.42	0.000	n/a	0.706255	340.4	429.1	0.9161	1136.9
Moisture Separator Drain Line 1	8.76	5.94	0.13	0.00	0.00	24.00	0.000	n/a	1.217196	221.9	390.6	0.0000	363.3
Reheater Steam & Drain Line 1	9.18	5.89	0.46	0.00	0.00	12.20	0.000	n/a	0.795863	644.7	494.0	0.0201	495.3
LP Extraction Steam Line 1	9.21	6.38	0.13	0.00	0.00	45.88	0.000	n/a	0.502856	65.0	298.0	0.9981	1177.4
LP Extraction Steam Line 2	9.21	6.74	0.13	0.00	0.00	34.34	0.000	n/a	0.475653	27.9	246.1	0.9557	1120.6
LP Extraction Steam Line 3	9.21	7.21	0.16	0.00	0.00	7.80	0.000	n/a	0.408297	10.7	196.5	0.6642	815.4
LP Extraction Steam Line 4	9.21	7.55	0.14	0.00	0.00	9.62	0.000	n/a	0.667055	5.0	162.6	0.7270	858.0
FWH Tube Side Line 1	9.18	6.09	0.48	0.00	0.00	19.96	0.000	0.00	13.12415	-----	423.2	0.0000	-----
FWH Tube Side Line 2	9.20	6.32	0.52	0.00	0.00	25.52	0.000	0.00	9.475758	-----	371.6	0.0000	-----
FWH Tube Side Line 3	9.20	6.77	0.52	0.00	0.00	31.70	0.000	0.00	9.475758	-----	293.6	0.0000	-----
FWH Tube Side Line 4	9.20	7.14	0.52	0.00	0.00	35.16	0.000	0.00	9.475758	-----	243.8	0.0000	-----

			1st Constituent Ammonia	2nd Constituent None			Dis.	Vent					
HBD Item Description	(Note 1) Cold pH	Hot pH	(ppm)	(ppm)	Ammonia (ppm)	Hydrazine (ppb)	Oxy (ppb)	Rate (%)	Flow Rate (Mlb/hr)	Pres (psia)	Temp (F)	Quality	Enthalpy (Btu/lb)
FWH Tube Side Line 5	9.20	7.63	0.52	0.00	0.00	37.77	0.000	0.00	9.475758	-----	191.8	0.0000	-----
FWH Tube Side Line 6	9.20	8.04	0.52	0.00	0.00	38.94	0.000	0.00	9.475758	-----	155.7	0.0000	-----
FWH Shell Side Line 1	9.18	6.23	0.49	0.00	0.00	12.00	0.000	n/a	1.502118	-----	386.7	0.0000	-----
FWH Shell Side Line 2	9.18	6.29	0.49	0.00	0.00	12.00	0.000	n/a	0.92908	-----	374.1	0.0000	-----
FWH Shell Side Line 3	9.21	7.10	0.53	0.00	0.00	2.74	0.000	n/a	0.502856	-----	250.0	0.0000	-----
FWH Shell Side Line 4	9.21	7.58	0.53	0.00	0.00	2.74	0.000	n/a	0.978509	-----	196.9	0.0000	-----
FWH Shell Side Line 5	9.21	7.96	0.53	0.00	0.00	2.74	0.000	n/a	1.386806	-----	162.5	0.0000	-----
FWH Shell Side Line 6	9.21	8.81	0.53	0.00	0.00	2.74	0.000	n/a	2.053861	-----	100.3	0.0000	-----
Feed Pump Steam & Drain Line 1	9.21	8.28	0.11	0.00	0.00	20.50	0.000	n/a	0.116701	1.0	101.7	0.8734	974.8
Drain Tank Drain Line 1	9.09	5.96	0.37	0.00	0.00	16.00	0.000	0.00	3.648394	403.5	445.4	0.0000	359.1

Notes:
1: For two-phase lines, the cold pH reported is for the mixture of steam and water, and the amine concentrations and hot pH are for the water phase only.
2: For Superheated steam, cold pH, hot pH and amine concentration are not reported since there is no water phase.

Company: Entergy Nuclear Operations, Inc.
Plant: Indian Point
Unit: 3
DB Name: IPEC3

Report Date/Time: 13-Nov-2007 3:25 pm
Analysis Date/Time: 12-Nov-2007 12:15 pm
CHECWORKS SFA Version 2.2 SP-1 (build 70)

Chemistry Analysis Report

Water Treatment : Cycle 3
Power Level : 100.00%
Plant Type : PWR

Chemistry Condition :

Condensate Dissolved Oxygen (ppb) :		11.720		
Concentration of 1st Constituent (ppm) :	Ammonia	0.760	, Sampling at	Condensate
Concentration of 2nd Constituent (ppm) :	None	0.000	, Sampling at	Not Used
Concentration of Ammonia (ppm) :		0.000	, Sampling at	Not Used
Concentration of Hydrazine (ppb) :		25.000	, Sampling at	Final Feed Water
Hydrazine at SG (ppb) :		15.000	, Sampling at	Steam outlet
Hydrazine at MSR drain (ppb) :		30.000		
Concentration of Boron (ppm) :		7.500	, Sampling at	Steam Generator Blowdown
Boron Injection Rate (lbm/hr) :		0.000		

Chemistry Analysis Results :

HBD Item Description	(Note 1) Cold pH	Hot pH	1st Constituent Ammonia (ppm)	2nd Constituent None (ppm)	Ammonia (ppm)	Hydrazine (ppb)	Dis. Oxy (ppb)	Vent Rate (%)	Flow Rate (Mlb/hr)	Pres (psia)	Temp (F)	Quality	Enthalpy (Btu/lb)
Blowdown Line	7.48	5.75	0.20	0.00	0.00	66.34	0.000	n/a	0.1	778.6	518.0	0.0000	-----
Main Steam Line 1	9.02	5.75	0.19	0.00	0.00	66.34	0.000	n/a	13.02415	-----	518.0	0.9999	-----
Main Steam Line 2	9.02	5.89	0.18	0.00	0.00	69.28	0.000	n/a	10.59295	340.4	429.1	0.9161	1136.9
Main Steam Line 3	9.26	6.00	0.18	0.00	0.00	27.84	0.000	n/a	9.375758	-----	390.6	0.9900	-----
Main Steam Line 4	9.26	7.60	0.19	0.00	0.00	12.02	0.000	n/a	7.205196	5.0	162.6	0.7270	858.0
HP Extraction Steam Line 1	9.02	6.05	0.17	0.00	0.00	103.79	0.000	n/a	0.92908	185.6	375.6	0.9540	1158.3
HP Extraction Steam Line 2	9.02	5.89	0.18	0.00	0.00	69.28	0.000	n/a	0.706255	340.4	429.1	0.9161	1136.9
Moisture Separator Drain Line 1	7.78	5.99	0.18	0.00	0.00	30.00	0.000	n/a	1.217196	221.9	390.6	0.0000	363.3
Reheater Steam & Drain Line 1	9.02	5.95	0.67	0.00	0.00	15.24	0.000	n/a	0.795863	644.7	494.0	0.0201	495.3
LP Extraction Steam Line 1	9.26	6.39	0.19	0.00	0.00	57.35	0.000	n/a	0.502856	65.0	298.0	0.9981	1177.4
LP Extraction Steam Line 2	9.26	6.78	0.18	0.00	0.00	42.92	0.000	n/a	0.475653	27.9	246.1	0.9557	1120.6
LP Extraction Steam Line 3	9.26	7.28	0.20	0.00	0.00	9.75	0.000	n/a	0.408297	10.7	196.5	0.6642	815.4
LP Extraction Steam Line 4	9.26	7.60	0.19	0.00	0.00	12.02	0.000	n/a	0.667055	5.0	162.6	0.7270	858.0
FWH Tube Side Line 1	8.99	6.17	0.70	0.00	0.00	24.95	0.000	0.00	13.12415	-----	423.2	0.0000	-----
FWH Tube Side Line 2	9.21	6.41	0.76	0.00	0.00	30.62	0.000	0.00	9.475758	-----	371.6	0.0000	-----
FWH Tube Side Line 3	9.21	6.86	0.76	0.00	0.00	35.69	0.000	0.00	9.475758	-----	293.6	0.0000	-----
FWH Tube Side Line 4	9.21	7.24	0.76	0.00	0.00	38.40	0.000	0.00	9.475758	-----	243.8	0.0000	-----

HBD Item Description	(Note 1) Cold pH	Hot pH	1st Constituent Ammonia (ppm)	2nd Constituent None (ppm)	Ammonia (ppm)	Hydrazine (ppb)	Dis. Oxy (ppb)	Vent Rate (%)	Flow Rate (Mlb/hr)	Pres (psia)	Temp (F)	Quality	Enthalpy (Btu/lb)
FWH Tube Side Line 5	9.21	7.73	0.76	0.00	0.00	40.40	0.000	0.00	9.475758	-----	191.8	0.0000	-----
FWH Tube Side Line 6	9.21	8.13	0.76	0.00	0.00	41.29	0.000	0.00	9.475758	-----	155.7	0.0000	-----
FWH Shell Side Line 1	9.02	6.32	0.71	0.00	0.00	15.00	0.000	n/a	1.502118	-----	386.7	0.0000	-----
FWH Shell Side Line 2	9.02	6.37	0.71	0.00	0.00	15.00	0.000	n/a	0.92908	-----	374.1	0.0000	-----
FWH Shell Side Line 3	9.26	7.20	0.78	0.00	0.00	3.42	0.000	n/a	0.502856	-----	250.0	0.0000	-----
FWH Shell Side Line 4	9.26	7.68	0.78	0.00	0.00	3.42	0.000	n/a	0.978509	-----	196.9	0.0000	-----
FWH Shell Side Line 5	9.26	8.06	0.78	0.00	0.00	3.42	0.000	n/a	1.386806	-----	162.5	0.0000	-----
FWH Shell Side Line 6	9.26	8.89	0.78	0.00	0.00	3.42	0.000	n/a	2.053861	-----	100.3	0.0000	-----
Feed Pump Steam & Drain Line 1	9.26	8.18	0.19	0.00	0.00	25.62	0.000	n/a	0.116701	1.0	101.7	0.8734	974.8
Drain Tank Drain Line 1	8.56	6.03	0.53	0.00	0.00	20.00	0.000	0.00	3.648394	403.5	445.4	0.0000	359.1

Notes:
1: For two-phase lines, the cold pH reported is for the mixture of steam and water, and the amine concentrations and hot pH are for the water phase only.
2: For Superheated steam, cold pH, hot pH and amine concentration are not reported since there is no water phase.

Company: Entergy Nuclear Operations, Inc.
Plant: Indian Point
Unit: 3
DB Name: IPEC3

Report Date/Time: 13-Nov-2007 3:25 pm
Analysis Date/Time: 12-Nov-2007 12:15 pm

CHECWORKS SFA Version 2.2 SP-1 (build 70)

Chemistry Analysis Report

Water Treatment : Cycle 4
Power Level : 100.00%
Plant Type : PWR

Chemistry Condition :

Condensate Dissolved Oxygen (ppb) :		9.130		
Concentration of 1st Constituent (ppm) :	Ammonia	1.260	, Sampling at	Final Feed Water
Concentration of 2nd Constituent (ppm) :	None	0.000	, Sampling at	Not Used
Concentration of Ammonia (ppm) :		0.000	, Sampling at	Not Used
Concentration of Hydrazine (ppb) :		40.000	, Sampling at	Final Feed Water
Hydrazine at SG (ppb) :		24.000	, Sampling at	Steam outlet
Hydrazine at MSR drain (ppb) :		48.000		
Concentration of Boron (ppm) :		7.500	, Sampling at	Steam Generator Blowdown
Boron Injection Rate (lbm/hr) :		0.000		

Chemistry Analysis Results :

HBD Item Description	(Note 1) Cold pH	Hot pH	1st Constituent Ammonia (ppm)	2nd Constituent None (ppm)	Ammonia (ppm)	Hydrazine (ppb)	Dis. Oxy (ppb)	Vent Rate (%)	Flow Rate (Mlb/hr)	Pres (psia)	Temp (F)	Quality	Enthalpy (Btu/lb)
Blowdown Line	7.71	5.82	0.35	0.00	0.00	106.15	0.000	n/a	0.1	778.6	518.0	0.0000	-----
Main Steam Line 1	9.24	5.82	0.34	0.00	0.00	106.15	0.000	n/a	13.02415	-----	518.0	0.9999	-----
Main Steam Line 2	9.24	5.99	0.30	0.00	0.00	110.85	0.000	n/a	10.59295	340.4	429.1	0.9161	1136.9
Main Steam Line 3	9.44	6.10	0.30	0.00	0.00	44.54	0.000	n/a	9.375758	-----	390.6	0.9900	-----
Main Steam Line 4	9.44	7.73	0.28	0.00	0.00	19.24	0.000	n/a	7.205196	5.0	162.6	0.7270	858.0
HP Extraction Steam Line 1	9.24	6.16	0.28	0.00	0.00	166.07	0.000	n/a	0.92908	185.6	375.6	0.9540	1158.3
HP Extraction Steam Line 2	9.24	5.99	0.30	0.00	0.00	110.85	0.000	n/a	0.706255	340.4	429.1	0.9161	1136.9
Moisture Separator Drain Line 1	7.99	6.10	0.30	0.00	0.00	48.00	0.000	n/a	1.217196	221.9	390.6	0.0000	363.3
Reheater Steam & Drain Line 1	9.24	6.07	1.20	0.00	0.00	24.39	0.000	n/a	0.795863	644.7	494.0	0.0201	495.3
LP Extraction Steam Line 1	9.44	6.52	0.29	0.00	0.00	91.76	0.000	n/a	0.502856	65.0	298.0	0.9981	1177.4
LP Extraction Steam Line 2	9.44	6.91	0.27	0.00	0.00	68.67	0.000	n/a	0.475653	27.9	246.1	0.9557	1120.6
LP Extraction Steam Line 3	9.44	7.41	0.31	0.00	0.00	15.60	0.000	n/a	0.408297	10.7	196.5	0.6642	815.4
LP Extraction Steam Line 4	9.44	7.73	0.28	0.00	0.00	19.24	0.000	n/a	0.667055	5.0	162.6	0.7270	858.0
FWH Tube Side Line 1	9.21	6.30	1.26	0.00	0.00	39.98	0.000	0.00	13.12415	-----	423.2	0.0000	-----
FWH Tube Side Line 2	9.39	6.55	1.38	0.00	0.00	47.55	0.000	0.00	9.475758	-----	371.6	0.0000	-----
FWH Tube Side Line 3	9.39	7.01	1.38	0.00	0.00	52.60	0.000	0.00	9.475758	-----	293.6	0.0000	-----
FWH Tube Side Line 4	9.39	7.40	1.38	0.00	0.00	55.17	0.000	0.00	9.475758	-----	243.8	0.0000	-----

HBD Item Description	(Note 1) Cold pH	Hot pH	1st Constituent Ammonia (ppm)	2nd Constituent None (ppm)	Ammonia (ppm)	Hydrazine (ppb)	Dis. Oxy (ppb)	Vent Rate (%)	Flow Rate (Mlb/hr)	Pres (psia)	Temp (F)	Quality	Enthalpy (Btu/lb)
FWH Tube Side Line 5	9.39	7.89	1.38	0.00	0.00	57.08	0.000	0.00	9.475758	-----	191.8	0.0000	-----
FWH Tube Side Line 6	9.39	8.29	1.38	0.00	0.00	57.94	0.000	0.00	9.475758	-----	155.7	0.0000	-----
FWH Shell Side Line 1	9.24	6.45	1.28	0.00	0.00	24.00	0.000	n/a	1.502118	-----	386.7	0.0000	-----
FWH Shell Side Line 2	9.24	6.51	1.28	0.00	0.00	24.00	0.000	n/a	0.92908	-----	374.1	0.0000	-----
FWH Shell Side Line 3	9.44	7.35	1.40	0.00	0.00	5.48	0.000	n/a	0.502856	-----	250.0	0.0000	-----
FWH Shell Side Line 4	9.44	7.84	1.40	0.00	0.00	5.48	0.000	n/a	0.978509	-----	196.9	0.0000	-----
FWH Shell Side Line 5	9.44	8.22	1.40	0.00	0.00	5.48	0.000	n/a	1.386806	-----	162.5	0.0000	-----
FWH Shell Side Line 6	9.44	9.06	1.40	0.00	0.00	5.48	0.000	n/a	2.053861	-----	100.3	0.0000	-----
Feed Pump Steam & Drain Line 1	9.44	8.31	0.27	0.00	0.00	40.99	0.000	n/a	0.116701	1.0	101.7	0.8734	974.8
Drain Tank Drain Line 1	8.81	6.15	0.95	0.00	0.00	32.01	0.000	0.00	3.648394	403.5	445.4	0.0000	359.1

Notes:
1: For two-phase lines, the cold pH reported is for the mixture of steam and water, and the amine concentrations and hot pH are for the water phase only.
2: For Superheated steam, cold pH, hot pH and amine concentration are not reported since there is no water phase.

Company: Entergy Nuclear Operations, Inc.
Plant: Indian Point
Unit: 3
DB Name: IPEC3

Report Date/Time: 13-Nov-2007 3:25 pm
Analysis Date/Time: 12-Nov-2007 12:15 pm
CHECWORKS SFA Version 2.2 SP-1 (build 70)

Chemistry Analysis Report

Water Treatment : Cycle 5
Power Level : 100.00%
Plant Type : PWR

Chemistry Condition :

Condensate Dissolved Oxygen (ppb) :		2.830		
Concentration of 1st Constituent (ppm) :	Ammonia	1.290	, Sampling at	Final Feed Water
Concentration of 2nd Constituent (ppm) :	None	0.000	, Sampling at	Not Used
Concentration of Ammonia (ppm) :		0.000	, Sampling at	Not Used
Concentration of Hydrazine (ppb) :		40.000	, Sampling at	Final Feed Water
Hydrazine at SG (ppb) :		24.000	, Sampling at	Steam outlet
Hydrazine at MSR drain (ppb) :		48.000		
Concentration of Boron (ppm) :		0.000	, Sampling at	Not Used
Boron Injection Rate (lbm/hr) :		0.000		

Chemistry Analysis Results :

HBD Item Description	(Note 1) Cold pH	Hot pH	1st Constituent Ammonia (ppm)	2nd Constituent None (ppm)	Ammonia (ppm)	Hydrazine (ppb)	Dis. Oxy (ppb)	Vent Rate (%)	Flow Rate (Mlb/hr)	Pres (psia)	Temp (F)	Quality	Enthalpy (Btu/lb)
Blowdown Line	9.09	5.84	0.35	0.00	0.00	106.15	0.000	n/a	0.1	778.6	518.0	0.0000	-----
Main Steam Line 1	9.46	5.84	0.35	0.00	0.00	106.15	0.000	n/a	13.02415	-----	518.0	0.9999	-----
Main Steam Line 2	9.46	6.00	0.31	0.00	0.00	110.85	0.000	n/a	10.59295	340.4	429.1	0.9161	1136.9
Main Steam Line 3	9.48	6.12	0.30	0.00	0.00	44.54	0.000	n/a	9.375758	-----	390.6	0.9900	-----
Main Steam Line 4	9.48	7.76	0.28	0.00	0.00	19.24	0.000	n/a	7.205196	5.0	162.6	0.7270	858.0
HP Extraction Steam Line 1	9.46	6.19	0.28	0.00	0.00	166.07	0.000	n/a	0.92908	185.6	375.6	0.9540	1158.3
HP Extraction Steam Line 2	9.46	6.00	0.31	0.00	0.00	110.85	0.000	n/a	0.706255	340.4	429.1	0.9161	1136.9
Moisture Separator Drain Line 1	9.04	6.12	0.30	0.00	0.00	48.00	0.000	n/a	1.217196	221.9	390.6	0.0000	363.3
Reheater Steam & Drain Line 1	9.46	6.07	1.23	0.00	0.00	24.39	0.000	n/a	0.795863	644.7	494.0	0.0201	495.3
LP Extraction Steam Line 1	9.48	6.58	0.27	0.00	0.00	91.76	0.000	n/a	0.502856	65.0	298.0	0.9981	1177.4
LP Extraction Steam Line 2	9.48	6.95	0.27	0.00	0.00	68.67	0.000	n/a	0.475653	27.9	246.1	0.9557	1120.6
LP Extraction Steam Line 3	9.48	7.43	0.31	0.00	0.00	15.60	0.000	n/a	0.408297	10.7	196.5	0.6642	815.4
LP Extraction Steam Line 4	9.48	7.76	0.28	0.00	0.00	19.24	0.000	n/a	0.667055	5.0	162.6	0.7270	858.0
FWH Tube Side Line 1	9.45	6.30	1.29	0.00	0.00	40.02	0.000	0.00	13.12415	-----	423.2	0.0000	-----
FWH Tube Side Line 2	9.48	6.55	1.41	0.00	0.00	46.95	0.000	0.00	9.475758	-----	371.6	0.0000	-----
FWH Tube Side Line 3	9.48	7.02	1.41	0.00	0.00	50.08	0.000	0.00	9.475758	-----	293.6	0.0000	-----
FWH Tube Side Line 4	9.48	7.41	1.41	0.00	0.00	51.26	0.000	0.00	9.475758	-----	243.8	0.0000	-----

HBD Item Description	(Note 1) Cold pH	Hot pH	1st Constituent Ammonia (ppm)	2nd Constituent None (ppm)	Ammonia (ppm)	Hydrazine (ppb)	Dis. Oxy (ppb)	Vent Rate (%)	Flow Rate (Mlb/hr)	Pres (psia)	Temp (F)	Quality	Enthalpy (Btu/lb)
FWH Tube Side Line 5	9.48	7.90	1.41	0.00	0.00	52.03	0.000	0.00	9.475758	-----	191.8	0.0000	-----
FWH Tube Side Line 6	9.48	8.32	1.41	0.00	0.00	52.36	0.000	0.00	9.475758	-----	155.7	0.0000	-----
FWH Shell Side Line 1	9.46	6.46	1.31	0.00	0.00	24.00	0.000	n/a	1.502118	-----	386.7	0.0000	-----
FWH Shell Side Line 2	9.46	6.52	1.31	0.00	0.00	24.00	0.000	n/a	0.92908	-----	374.1	0.0000	-----
FWH Shell Side Line 3	9.48	7.36	1.44	0.00	0.00	5.48	0.000	n/a	0.502856	-----	250.0	0.0000	-----
FWH Shell Side Line 4	9.48	7.85	1.44	0.00	0.00	5.48	0.000	n/a	0.978509	-----	196.9	0.0000	-----
FWH Shell Side Line 5	9.48	8.24	1.44	0.00	0.00	5.48	0.000	n/a	1.386806	-----	162.5	0.0000	-----
FWH Shell Side Line 6	9.48	9.09	1.44	0.00	0.00	5.48	0.000	n/a	2.053861	-----	100.3	0.0000	-----
Feed Pump Steam & Drain Line 1	9.48	8.50	0.20	0.00	0.00	40.99	0.000	n/a	0.116701	1.0	101.7	0.8734	974.8
Drain Tank Drain Line 1	9.38	6.16	0.97	0.00	0.00	32.01	0.000	0.00	3.648394	403.5	445.4	0.0000	359.1

Notes:
1: For two-phase lines, the cold pH reported is for the mixture of steam and water, and the amine concentrations and hot pH are for the water phase only.
2: For Superheated steam, cold pH, hot pH and amine concentration are not reported since there is no water phase.

Company: Entergy Nuclear Operations, Inc.
Plant: Indian Point
Unit: 3
DB Name: IPEC3

Report Date/Time: 13-Nov-2007 3:26 pm
Analysis Date/Time: 12-Nov-2007 12:15 pm
CHECWORKS SFA Version 2.2 SP-1 (build 70)

Chemistry Analysis Report

Water Treatment : Cycle 6
Power Level : 100.00%
Plant Type : PWR

Chemistry Condition :

Condensate Dissolved Oxygen (ppb) :		2.530		
Concentration of 1st Constituent (ppm) :	Ammonia	1.290	, Sampling at	Final Feed Water
Concentration of 2nd Constituent (ppm) :	None	0.000	, Sampling at	Not Used
Concentration of Ammonia (ppm) :		0.000	, Sampling at	Not Used
Concentration of Hydrazine (ppb) :		40.000	, Sampling at	Final Feed Water
Hydrazine at SG (ppb) :		24.000	, Sampling at	Steam outlet
Hydrazine at MSR drain (ppb) :		48.000		
Concentration of Boron (ppm) :		0.000	, Sampling at	Not Used
Boron Injection Rate (lbm/hr) :		0.000		

Chemistry Analysis Results :

HBD Item Description	(Note 1) Cold pH	Hot pH	1st Constituent Ammonia (ppm)	2nd Constituent None (ppm)	Ammonia (ppm)	Hydrazine (ppb)	Dis. Oxy (ppb)	Vent Rate (%)	Flow Rate (Mlb/hr)	Pres (psia)	Temp (F)	Quality	Enthalpy (Btu/lb)
Blowdown Line	9.09	5.84	0.35	0.00	0.00	106.15	0.000	n/a	0.1	778.6	518.0	0.0000	-----
Main Steam Line 1	9.46	5.84	0.35	0.00	0.00	106.15	0.000	n/a	13.02415	-----	518.0	0.9999	-----
Main Steam Line 2	9.46	6.00	0.31	0.00	0.00	110.85	0.000	n/a	10.59295	340.4	429.1	0.9161	1136.9
Main Steam Line 3	9.48	6.12	0.30	0.00	0.00	44.54	0.000	n/a	9.375758	-----	390.6	0.9900	-----
Main Steam Line 4	9.48	7.76	0.28	0.00	0.00	19.24	0.000	n/a	7.205196	5.0	162.6	0.7270	858.0
HP Extraction Steam Line 1	9.46	6.19	0.28	0.00	0.00	166.07	0.000	n/a	0.92908	185.6	375.6	0.9540	1158.3
HP Extraction Steam Line 2	9.46	6.00	0.31	0.00	0.00	110.85	0.000	n/a	0.706255	340.4	429.1	0.9161	1136.9
Moisture Separator Drain Line 1	9.04	6.12	0.30	0.00	0.00	48.00	0.000	n/a	1.217196	221.9	390.6	0.0000	363.3
Reheater Steam & Drain Line 1	9.46	6.07	1.23	0.00	0.00	24.39	0.000	n/a	0.795863	644.7	494.0	0.0201	495.3
LP Extraction Steam Line 1	9.48	6.58	0.27	0.00	0.00	91.76	0.000	n/a	0.502856	65.0	298.0	0.9981	1177.4
LP Extraction Steam Line 2	9.48	6.95	0.27	0.00	0.00	68.67	0.000	n/a	0.475653	27.9	246.1	0.9557	1120.6
LP Extraction Steam Line 3	9.48	7.43	0.31	0.00	0.00	15.60	0.000	n/a	0.408297	10.7	196.5	0.6642	815.4
LP Extraction Steam Line 4	9.48	7.76	0.28	0.00	0.00	19.24	0.000	n/a	0.667055	5.0	162.6	0.7270	858.0
FWH Tube Side Line 1	9.45	6.30	1.29	0.00	0.00	40.02	0.000	0.00	13.12415	-----	423.2	0.0000	-----
FWH Tube Side Line 2	9.48	6.55	1.41	0.00	0.00	46.91	0.000	0.00	9.475758	-----	371.6	0.0000	-----
FWH Tube Side Line 3	9.48	7.02	1.41	0.00	0.00	49.95	0.000	0.00	9.475758	-----	293.6	0.0000	-----
FWH Tube Side Line 4	9.48	7.41	1.41	0.00	0.00	51.06	0.000	0.00	9.475758	-----	243.8	0.0000	-----

HBD Item Description	(Note 1) Cold pH	Hot pH	1st Constituent Ammonia (ppm)	2nd Constituent None (ppm)	Ammonia (ppm)	Hydrazine (ppb)	Dis. Oxy (ppb)	Vent Rate (%)	Flow Rate (Mlb/hr)	Pres (psia)	Temp (F)	Quality	Enthalpy (Btu/lb)
FWH Tube Side Line 5	9.48	7.90	1.41	0.00	0.00	51.78	0.000	0.00	9.475758	-----	191.8	0.0000	-----
FWH Tube Side Line 6	9.48	8.32	1.41	0.00	0.00	52.09	0.000	0.00	9.475758	-----	155.7	0.0000	-----
FWH Shell Side Line 1	9.46	6.46	1.31	0.00	0.00	24.00	0.000	n/a	1.502118	-----	386.7	0.0000	-----
FWH Shell Side Line 2	9.46	6.52	1.31	0.00	0.00	24.00	0.000	n/a	0.92908	-----	374.1	0.0000	-----
FWH Shell Side Line 3	9.48	7.36	1.44	0.00	0.00	5.48	0.000	n/a	0.502856	-----	250.0	0.0000	-----
FWH Shell Side Line 4	9.48	7.85	1.44	0.00	0.00	5.48	0.000	n/a	0.978509	-----	196.9	0.0000	-----
FWH Shell Side Line 5	9.48	8.24	1.44	0.00	0.00	5.48	0.000	n/a	1.386806	-----	162.5	0.0000	-----
FWH Shell Side Line 6	9.48	9.09	1.44	0.00	0.00	5.48	0.000	n/a	2.053861	-----	100.3	0.0000	-----
Feed Pump Steam & Drain Line 1	9.48	8.50	0.20	0.00	0.00	40.99	0.000	n/a	0.116701	1.0	101.7	0.8734	974.8
Drain Tank Drain Line 1	9.38	6.16	0.97	0.00	0.00	32.01	0.000	0.00	3.648394	403.5	445.4	0.0000	359.1

Notes:
1: For two-phase lines, the cold pH reported is for the mixture of steam and water, and the amine concentrations and hot pH are for the water phase only.
2: For Superheated steam, cold pH, hot pH and amine concentration are not reported since there is no water phase.

Company: Entergy Nuclear Operations, Inc.
Plant: Indian Point
Unit: 3
DB Name: IPEC3

Report Date/Time: 13-Nov-2007 3:26 pm
Analysis Date/Time: 12-Nov-2007 12:15 pm
CHECWORKS SFA Version 2.2 SP-1 (build 70)

Chemistry Analysis Report

Water Treatment : Cycle 7
Power Level : 100.00%
Plant Type : PWR

Chemistry Condition :

Condensate Dissolved Oxygen (ppb) :		3.000		
Concentration of 1st Constituent (ppm) :	Morpholine	4.500	, Sampling at	Final Feed Water
Concentration of 2nd Constituent (ppm) :	None	0.000	, Sampling at	Not Used
Concentration of Ammonia (ppm) :		0.060	, Sampling at	Final Feed Water
Concentration of Hydrazine (ppb) :		58.000	, Sampling at	Final Feed Water
Hydrazine at SG (ppb) :		34.800	, Sampling at	Steam outlet
Hydrazine at MSR drain (ppb) :		69.600		
Concentration of Boron (ppm) :		7.500	, Sampling at	Steam Generator Blowdown
Boron Injection Rate (lbm/hr) :		0.000		

Chemistry Analysis Results :

HBD Item Description	(Note 1) Cold pH	Hot pH	1st Constituent Morpholine (ppm)	2nd Constituent None (ppm)	Ammonia (ppm)	Hydrazine (ppb)	Dis. Oxy (ppb)	Vent Rate (%)	Flow Rate (Mlb/hr)	Pres (psia)	Temp (F)	Quality	Enthalpy (Btu/lb)
Blowdown Line	7.96	5.98	3.86	0.00	0.02	153.91	0.000	n/a	0.1	778.6	518.0	0.0000	-----
Main Steam Line 1	8.85	5.98	3.84	0.00	0.02	153.91	0.000	n/a	13.02415	-----	518.0	0.9999	-----
Main Steam Line 2	8.85	6.22	4.57	0.00	0.02	160.73	0.000	n/a	10.59295	340.4	429.1	0.9161	1136.9
Main Steam Line 3	9.04	6.37	5.08	0.00	0.01	64.59	0.000	n/a	9.375758	-----	390.6	0.9900	-----
Main Steam Line 4	9.04	8.09	9.86	0.00	0.01	27.89	0.000	n/a	7.205196	5.0	162.6	0.7270	858.0
HP Extraction Steam Line 1	8.85	6.44	5.41	0.00	0.01	240.80	0.000	n/a	0.92908	185.6	375.6	0.9540	1158.3
HP Extraction Steam Line 2	8.85	6.22	4.57	0.00	0.02	160.73	0.000	n/a	0.706255	340.4	429.1	0.9161	1136.9
Moisture Separator Drain Line 1	8.34	6.37	5.09	0.00	0.02	69.60	0.000	n/a	1.217196	221.9	390.6	0.0000	363.3
Reheater Steam & Drain Line 1	8.85	6.06	4.49	0.00	0.07	35.37	0.000	n/a	0.795863	644.7	494.0	0.0201	495.3
LP Extraction Steam Line 1	9.04	6.88	7.63	0.00	0.01	133.05	0.000	n/a	0.502856	65.0	298.0	0.9981	1177.4
LP Extraction Steam Line 2	9.04	7.32	9.42	0.00	0.01	99.57	0.000	n/a	0.475653	27.9	246.1	0.9557	1120.6
LP Extraction Steam Line 3	9.04	7.72	8.15	0.00	0.01	22.62	0.000	n/a	0.408297	10.7	196.5	0.6642	815.4
LP Extraction Steam Line 4	9.04	8.09	9.86	0.00	0.01	27.89	0.000	n/a	0.667055	5.0	162.6	0.7270	858.0
FWH Tube Side Line 1	8.82	6.24	4.50	0.00	0.06	58.02	0.000	0.00	13.12415	-----	423.2	0.0000	-----
FWH Tube Side Line 2	8.98	6.44	4.42	0.00	0.06	67.86	0.000	0.00	9.475758	-----	371.6	0.0000	-----
FWH Tube Side Line 3	8.98	6.85	4.42	0.00	0.06	71.99	0.000	0.00	9.475758	-----	293.6	0.0000	-----
FWH Tube Side Line 4	8.98	7.20	4.42	0.00	0.06	73.50	0.000	0.00	9.475758	-----	243.8	0.0000	-----

HBD Item Description	(Note 1) Cold pH	Hot pH	1st Constituent Morpholine (ppm)	2nd Constituent None (ppm)	Ammonia (ppm)	Hydrazine (ppb)	Dis. Oxy (ppb)	Vent Rate (%)	Flow Rate (Mlb/hr)	Pres (psia)	Temp (F)	Quality	Enthalpy (Btu/lb)
FWH Tube Side Line 5	8.98	7.65	4.42	0.00	0.06	74.50	0.000	0.00	9.475758	-----	191.8	0.0000	-----
FWH Tube Side Line 6	8.98	8.01	4.42	0.00	0.06	74.93	0.000	0.00	9.475758	-----	155.7	0.0000	-----
FWH Shell Side Line 1	8.85	6.38	4.50	0.00	0.07	34.80	0.000	n/a	1.502118	-----	386.7	0.0000	-----
FWH Shell Side Line 2	8.85	6.43	4.50	0.00	0.07	34.80	0.000	n/a	0.92908	-----	374.1	0.0000	-----
FWH Shell Side Line 3	9.04	7.16	4.43	0.00	0.08	7.94	0.000	n/a	0.502856	-----	250.0	0.0000	-----
FWH Shell Side Line 4	9.04	7.61	4.43	0.00	0.08	7.94	0.000	n/a	0.978509	-----	196.9	0.0000	-----
FWH Shell Side Line 5	9.04	7.95	4.43	0.00	0.08	7.94	0.000	n/a	1.386806	-----	162.5	0.0000	-----
FWH Shell Side Line 6	9.04	8.71	4.43	0.00	0.08	7.94	0.000	n/a	2.053861	-----	100.3	0.0000	-----
Feed Pump Steam & Drain Line 1	9.04	8.85	17.99	0.00	0.01	59.44	0.000	n/a	0.116701	1.0	101.7	0.8734	974.8
Drain Tank Drain Line 1	8.58	6.18	4.70	0.00	0.05	46.41	0.000	0.00	3.648394	403.5	445.4	0.0000	359.1

Notes:
1: For two-phase lines, the cold pH reported is for the mixture of steam and water, and the amine concentrations and hot pH are for the water phase only.
2: For Superheated steam, cold pH, hot pH and amine concentration are not reported since there is no water phase.

Company: Entergy Nuclear Operations, Inc.
Plant: Indian Point
Unit: 3
DB Name: IPEC3

Report Date/Time: 13-Nov-2007 3:26 pm
Analysis Date/Time: 12-Nov-2007 12:15 pm
CHECWORKS SFA Version 2.2 SP-1 (build 70)

Chemistry Analysis Report

Water Treatment : Cycle 8
Power Level : 100.00%
Plant Type : PWR

Chemistry Condition :

Condensate Dissolved Oxygen (ppb) :		4.000		
Concentration of 1st Constituent (ppm) :	Morpholine	4.500	, Sampling at	Final Feed Water
Concentration of 2nd Constituent (ppm) :	None	0.000	, Sampling at	Not Used
Concentration of Ammonia (ppm) :		0.200	, Sampling at	Final Feed Water
Concentration of Hydrazine (ppb) :		190.000	, Sampling at	Final Feed Water
Hydrazine at SG (ppb) :		114.000	, Sampling at	Steam outlet
Hydrazine at MSR drain (ppb) :		228.000		
Concentration of Boron (ppm) :		7.500	, Sampling at	Steam Generator Blowdown
Boron Injection Rate (lbm/hr) :		0.000		

Chemistry Analysis Results :

HBD Item Description	(Note 1) Cold pH	Hot pH	1st Constituent Morpholine (ppm)	2nd Constituent None (ppm)	Ammonia (ppm)	Hydrazine (ppb)	Dis. Oxy (ppb)	Vent Rate (%)	Flow Rate (Mlb/hr)	Pres (psia)	Temp (F)	Quality	Enthalpy (Btu/lb)
Blowdown Line	8.03	6.03	3.85	0.00	0.06	504.20	0.000	n/a	0.1	778.6	518.0	0.0000	-----
Main Steam Line 1	8.95	6.02	3.81	0.00	0.06	504.20	0.000	n/a	13.02415	-----	518.0	0.9999	-----
Main Steam Line 2	8.95	6.25	4.51	0.00	0.05	526.52	0.000	n/a	10.59295	340.4	429.1	0.9161	1136.9
Main Steam Line 3	9.15	6.39	5.05	0.00	0.05	211.58	0.000	n/a	9.375758	-----	390.6	0.9900	-----
Main Steam Line 4	9.15	8.10	9.86	0.00	0.03	91.38	0.000	n/a	7.205196	5.0	162.6	0.7270	858.0
HP Extraction Steam Line 1	8.95	6.47	5.33	0.00	0.04	788.82	0.000	n/a	0.92908	185.6	375.6	0.9540	1158.3
HP Extraction Steam Line 2	8.95	6.25	4.51	0.00	0.05	526.52	0.000	n/a	0.706255	340.4	429.1	0.9161	1136.9
Moisture Separator Drain Line 1	8.36	6.39	5.05	0.00	0.05	228.00	0.000	n/a	1.217196	221.9	390.6	0.0000	363.3
Reheater Steam & Drain Line 1	8.95	6.09	4.49	0.00	0.23	115.86	0.000	n/a	0.795863	644.7	494.0	0.0201	495.3
LP Extraction Steam Line 1	9.15	6.89	7.58	0.00	0.04	435.84	0.000	n/a	0.502856	65.0	298.0	0.9981	1177.4
LP Extraction Steam Line 2	9.15	7.33	9.39	0.00	0.03	326.19	0.000	n/a	0.475653	27.9	246.1	0.9557	1120.6
LP Extraction Steam Line 3	9.15	7.73	8.14	0.00	0.04	74.10	0.000	n/a	0.408297	10.7	196.5	0.6642	815.4
LP Extraction Steam Line 4	9.15	8.10	9.86	0.00	0.03	91.38	0.000	n/a	0.667055	5.0	162.6	0.7270	858.0
FWH Tube Side Line 1	8.91	6.28	4.50	0.00	0.20	190.01	0.000	0.00	13.12415	-----	423.2	0.0000	-----
FWH Tube Side Line 2	9.07	6.48	4.43	0.00	0.20	221.49	0.000	0.00	9.475758	-----	371.6	0.0000	-----
FWH Tube Side Line 3	9.07	6.90	4.43	0.00	0.19	232.79	0.000	0.00	9.475758	-----	293.6	0.0000	-----
FWH Tube Side Line 4	9.07	7.26	4.43	0.00	0.19	236.43	0.000	0.00	9.475758	-----	243.8	0.0000	-----

HBD Item Description	(Note 1) Cold pH	Hot pH	1st Constituent Morpholine (ppm)	2nd Constituent None (ppm)	Ammonia (ppm)	Hydrazine (ppb)	Dis. Oxy (ppb)	Vent Rate (%)	Flow Rate (Mlb/hr)	Pres (psia)	Temp (F)	Quality	Enthalpy (Btu/lb)
FWH Tube Side Line 5	9.07	7.71	4.43	0.00	0.19	238.86	0.000	0.00	9.475758	-----	191.8	0.0000	-----
FWH Tube Side Line 6	9.07	8.08	4.43	0.00	0.19	239.94	0.000	0.00	9.475758	-----	155.7	0.0000	-----
FWH Shell Side Line 1	8.95	6.42	4.50	0.00	0.24	114.00	0.000	n/a	1.502118	-----	386.7	0.0000	-----
FWH Shell Side Line 2	8.95	6.48	4.50	0.00	0.24	114.00	0.000	n/a	0.92908	-----	374.1	0.0000	-----
FWH Shell Side Line 3	9.15	7.22	4.43	0.00	0.26	26.02	0.000	n/a	0.502856	-----	250.0	0.0000	-----
FWH Shell Side Line 4	9.15	7.68	4.43	0.00	0.26	26.02	0.000	n/a	0.978509	-----	196.9	0.0000	-----
FWH Shell Side Line 5	9.15	8.03	4.43	0.00	0.26	26.02	0.000	n/a	1.386806	-----	162.5	0.0000	-----
FWH Shell Side Line 6	9.15	8.81	4.43	0.00	0.26	26.02	0.000	n/a	2.053861	-----	100.3	0.0000	-----
Feed Pump Steam & Drain Line 1	9.15	8.85	17.99	0.00	0.02	194.72	0.000	n/a	0.116701	1.0	101.7	0.8734	974.8
Drain Tank Drain Line 1	8.65	6.21	4.69	0.00	0.18	152.03	0.000	0.00	3.648394	403.5	445.4	0.0000	359.1

Notes:
1: For two-phase lines, the cold pH reported is for the mixture of steam and water, and the amine concentrations and hot pH are for the water phase only.
2: For Superheated steam, cold pH, hot pH and amine concentration are not reported since there is no water phase.

Company: Entergy Nuclear Operations, Inc.
Plant: Indian Point
Unit: 3
DB Name: IPEC3

Report Date/Time: 13-Nov-2007 3:27 pm
Analysis Date/Time: 12-Nov-2007 12:15 pm
CHECWORKS SFA Version 2.2 SP-1 (build 70)

Chemistry Analysis Report

Water Treatment : Cycle 9
Power Level : 100.00%
Plant Type : PWR

Chemistry Condition :

Condensate Dissolved Oxygen (ppb) :		9.000		
Concentration of 1st Constituent (ppm) :	Morpholine	4.500	, Sampling at	Final Feed Water
Concentration of 2nd Constituent (ppm) :	None	0.000	, Sampling at	Not Used
Concentration of Ammonia (ppm) :		0.680	, Sampling at	Final Feed Water
Concentration of Hydrazine (ppb) :		225.000	, Sampling at	Final Feed Water
Hydrazine at SG (ppb) :		135.000	, Sampling at	Steam outlet
Hydrazine at MSR drain (ppb) :		270.000		
Concentration of Boron (ppm) :		7.500	, Sampling at	Steam Generator Blowdown
Boron Injection Rate (lbm/hr) :		0.000		

Chemistry Analysis Results :

HBD Item Description	(Note 1) Cold pH	Hot pH	1st Constituent Morpholine (ppm)	2nd Constituent None (ppm)	Ammonia (ppm)	Hydrazine (ppb)	Dis. Oxy (ppb)	Vent Rate (%)	Flow Rate (Mlb/hr)	Pres (psia)	Temp (F)	Quality	Enthalpy (Btu/lb)
Blowdown Line	8.09	6.05	3.83	0.00	0.19	597.08	0.000	n/a	0.1	778.6	518.0	0.0000	-----
Main Steam Line 1	9.16	6.05	3.79	0.00	0.19	597.08	0.000	n/a	13.02415	-----	518.0	0.9999	-----
Main Steam Line 2	9.16	6.27	4.48	0.00	0.15	623.51	0.000	n/a	10.59295	340.4	429.1	0.9161	1136.9
Main Steam Line 3	9.35	6.41	5.01	0.00	0.14	250.55	0.000	n/a	9.375758	-----	390.6	0.9900	-----
Main Steam Line 4	9.35	8.12	9.84	0.00	0.10	108.21	0.000	n/a	7.205196	5.0	162.6	0.7270	858.0
HP Extraction Steam Line 1	9.16	6.49	5.29	0.00	0.13	934.12	0.000	n/a	0.92908	185.6	375.6	0.9540	1158.3
HP Extraction Steam Line 2	9.16	6.27	4.48	0.00	0.15	623.51	0.000	n/a	0.706255	340.4	429.1	0.9161	1136.9
Moisture Separator Drain Line 1	8.41	6.41	5.02	0.00	0.15	270.00	0.000	n/a	1.217196	221.9	390.6	0.0000	363.3
Reheater Steam & Drain Line 1	9.16	6.15	4.49	0.00	0.68	137.20	0.000	n/a	0.795863	644.7	494.0	0.0201	495.3
LP Extraction Steam Line 1	9.35	6.91	7.52	0.00	0.12	516.12	0.000	n/a	0.502856	65.0	298.0	0.9981	1177.4
LP Extraction Steam Line 2	9.35	7.34	9.34	0.00	0.10	386.27	0.000	n/a	0.475653	27.9	246.1	0.9557	1120.6
LP Extraction Steam Line 3	9.35	7.75	8.12	0.00	0.13	87.75	0.000	n/a	0.408297	10.7	196.5	0.6642	815.4
LP Extraction Steam Line 4	9.35	8.12	9.84	0.00	0.10	108.21	0.000	n/a	0.667055	5.0	162.6	0.7270	858.0
FWH Tube Side Line 1	9.12	6.36	4.50	0.00	0.68	225.04	0.000	0.00	13.12415	-----	423.2	0.0000	-----
FWH Tube Side Line 2	9.29	6.58	4.43	0.00	0.72	262.36	0.000	0.00	9.475758	-----	371.6	0.0000	-----
FWH Tube Side Line 3	9.29	7.02	4.43	0.00	0.72	276.28	0.000	0.00	9.475758	-----	293.6	0.0000	-----
FWH Tube Side Line 4	9.29	7.38	4.43	0.00	0.72	281.58	0.000	0.00	9.475758	-----	243.8	0.0000	-----

HBD Item Description	(Note 1) Cold pH	Hot pH	1st Constituent Morpholine (ppm)	2nd Constituent None (ppm)	Ammonia (ppm)	Hydrazine (ppb)	Dis. Oxy (ppb)	Vent Rate (%)	Flow Rate (Mlb/hr)	Pres (psia)	Temp (F)	Quality	Enthalpy (Btu/lb)
FWH Tube Side Line 5	9.29	7.85	4.43	0.00	0.72	285.69	0.000	0.00	9.475758	-----	191.8	0.0000	-----
FWH Tube Side Line 6	9.29	8.24	4.43	0.00	0.71	287.69	0.000	0.00	9.475758	-----	155.7	0.0000	-----
FWH Shell Side Line 1	9.16	6.51	4.51	0.00	0.73	135.00	0.000	n/a	1.502118	-----	386.7	0.0000	-----
FWH Shell Side Line 2	9.16	6.56	4.51	0.00	0.73	135.00	0.000	n/a	0.92908	-----	374.1	0.0000	-----
FWH Shell Side Line 3	9.35	7.35	4.44	0.00	0.81	30.81	0.000	n/a	0.502856	-----	250.0	0.0000	-----
FWH Shell Side Line 4	9.35	7.82	4.44	0.00	0.81	30.81	0.000	n/a	0.978509	-----	196.9	0.0000	-----
FWH Shell Side Line 5	9.35	8.18	4.44	0.00	0.81	30.81	0.000	n/a	1.386806	-----	162.5	0.0000	-----
FWH Shell Side Line 6	9.35	8.99	4.44	0.00	0.81	30.81	0.000	n/a	2.053861	-----	100.3	0.0000	-----
Feed Pump Steam & Drain Line 1	9.35	8.86	17.98	0.00	0.07	230.59	0.000	n/a	0.116701	1.0	101.7	0.8734	974.8
Drain Tank Drain Line 1	8.81	6.27	4.68	0.00	0.54	180.04	0.000	0.00	3.648394	403.5	445.4	0.0000	359.1

Notes:
1: For two-phase lines, the cold pH reported is for the mixture of steam and water, and the amine concentrations and hot pH are for the water phase only.
2: For Superheated steam, cold pH, hot pH and amine concentration are not reported since there is no water phase.

Company: Entergy Nuclear Operations, Inc.
Plant: Indian Point
Unit: 3
DB Name: IPEC3

Report Date/Time: 13-Nov-2007 3:27 pm
Analysis Date/Time: 12-Nov-2007 12:15 pm
CHECWORKS SFA Version 2.2 SP-1 (build 70)

Chemistry Analysis Report

Water Treatment : Cycle 10A
Power Level : 100.00%
Plant Type : PWR

Chemistry Condition :

Condensate Dissolved Oxygen (ppb) :		1.800		
Concentration of 1st Constituent (ppm) :	Morpholine	4.500	, Sampling at	Final Feed Water
Concentration of 2nd Constituent (ppm) :	None	0.000	, Sampling at	Not Used
Concentration of Ammonia (ppm) :		2.000	, Sampling at	Condensate
Concentration of Hydrazine (ppb) :		180.000	, Sampling at	Final Feed Water
Hydrazine at SG (ppb) :		108.000	, Sampling at	Steam outlet
Hydrazine at MSR drain (ppb) :		216.000		
Concentration of Boron (ppm) :		6.500	, Sampling at	Steam Generator Blowdown
Boron Injection Rate (lbm/hr) :		0.000		

Chemistry Analysis Results :

HBD Item Description	(Note 1) Cold pH	Hot pH	1st Constituent Morpholine (ppm)	2nd Constituent None (ppm)	Ammonia (ppm)	Hydrazine (ppb)	Dis. Oxy (ppb)	Vent Rate (%)	Flow Rate (Mlb/hr)	Pres (psia)	Temp (F)	Quality	Enthalpy (Btu/lb)
Blowdown Line	8.24	6.08	3.79	0.00	0.48	477.66	0.000	n/a	0.1	778.6	518.0	0.0000	-----
Main Steam Line 1	9.43	6.08	3.77	0.00	0.48	477.66	0.000	n/a	13.02415	-----	518.0	0.9999	-----
Main Steam Line 2	9.43	6.30	4.44	0.00	0.39	498.81	0.000	n/a	10.59295	340.4	429.1	0.9161	1136.9
Main Steam Line 3	9.58	6.44	4.94	0.00	0.37	200.44	0.000	n/a	9.375758	-----	390.6	0.9900	-----
Main Steam Line 4	9.58	8.16	9.79	0.00	0.26	86.57	0.000	n/a	7.205196	5.0	162.6	0.7270	858.0
HP Extraction Steam Line 1	9.43	6.52	5.24	0.00	0.33	747.30	0.000	n/a	0.92908	185.6	375.6	0.9540	1158.3
HP Extraction Steam Line 2	9.43	6.30	4.44	0.00	0.39	498.81	0.000	n/a	0.706255	340.4	429.1	0.9161	1136.9
Moisture Separator Drain Line 1	8.53	6.44	4.95	0.00	0.37	216.00	0.000	n/a	1.217196	221.9	390.6	0.0000	363.3
Reheater Steam & Drain Line 1	9.44	6.25	4.49	0.00	1.77	109.76	0.000	n/a	0.795863	644.7	494.0	0.0201	495.3
LP Extraction Steam Line 1	9.58	6.94	7.42	0.00	0.29	412.90	0.000	n/a	0.502856	65.0	298.0	0.9981	1177.4
LP Extraction Steam Line 2	9.58	7.37	9.25	0.00	0.26	309.02	0.000	n/a	0.475653	27.9	246.1	0.9557	1120.6
LP Extraction Steam Line 3	9.58	7.80	8.07	0.00	0.31	70.20	0.000	n/a	0.408297	10.7	196.5	0.6642	815.4
LP Extraction Steam Line 4	9.58	8.16	9.79	0.00	0.26	86.57	0.000	n/a	0.667055	5.0	162.6	0.7270	858.0
FWH Tube Side Line 1	9.41	6.48	4.50	0.00	1.84	180.00	0.000	0.00	13.12415	-----	423.2	0.0000	-----
FWH Tube Side Line 2	9.54	6.71	4.44	0.00	2.01	209.79	0.000	0.00	9.475758	-----	371.6	0.0000	-----
FWH Tube Side Line 3	9.54	7.17	4.44	0.00	2.00	220.17	0.000	0.00	9.475758	-----	293.6	0.0000	-----
FWH Tube Side Line 4	9.54	7.55	4.44	0.00	2.00	223.14	0.000	0.00	9.475758	-----	243.8	0.0000	-----

HBD Item Description	(Note 1) Cold pH	Hot pH	1st Constituent Morpholine (ppm)	2nd Constituent None (ppm)	Ammonia (ppm)	Hydrazine (ppb)	Dis. Oxy (ppb)	Vent Rate (%)	Flow Rate (Mlb/hr)	Pres (psia)	Temp (F)	Quality	Enthalpy (Btu/lb)
FWH Tube Side Line 5	9.54	8.04	4.44	0.00	2.00	224.89	0.000	0.00	9.475758	-----	191.8	0.0000	-----
FWH Tube Side Line 6	9.54	8.44	4.44	0.00	2.00	225.61	0.000	0.00	9.475758	-----	155.7	0.0000	-----
FWH Shell Side Line 1	9.44	6.63	4.51	0.00	1.89	108.00	0.000	n/a	1.502118	-----	386.7	0.0000	-----
FWH Shell Side Line 2	9.44	6.69	4.51	0.00	1.89	108.00	0.000	n/a	0.92908	-----	374.1	0.0000	-----
FWH Shell Side Line 3	9.58	7.51	4.45	0.00	2.08	24.65	0.000	n/a	0.502856	-----	250.0	0.0000	-----
FWH Shell Side Line 4	9.58	7.99	4.45	0.00	2.08	24.65	0.000	n/a	0.978509	-----	196.9	0.0000	-----
FWH Shell Side Line 5	9.58	8.37	4.45	0.00	2.08	24.65	0.000	n/a	1.386806	-----	162.5	0.0000	-----
FWH Shell Side Line 6	9.58	9.20	4.45	0.00	2.08	24.65	0.000	n/a	2.053861	-----	100.3	0.0000	-----
Feed Pump Steam & Drain Line 1	9.58	8.90	17.89	0.00	0.17	184.47	0.000	n/a	0.116701	1.0	101.7	0.8734	974.8
Drain Tank Drain Line 1	9.10	6.36	4.65	0.00	1.38	144.03	0.000	0.00	3.648394	403.5	445.4	0.0000	359.1

Notes:
1: For two-phase lines, the cold pH reported is for the mixture of steam and water, and the amine concentrations and hot pH are for the water phase only.
2: For Superheated steam, cold pH, hot pH and amine concentration are not reported since there is no water phase.

Company: Entergy Nuclear Operations, Inc.
Plant: Indian Point
Unit: 3
DB Name: IPEC3

Report Date/Time: 13-Nov-2007 3:28 pm
Analysis Date/Time: 12-Nov-2007 12:15 pm
CHECWORKS SFA Version 2.2 SP-1 (build 70)

Chemistry Analysis Report

Water Treatment : Cycle 10B
Power Level : 100.00%
Plant Type : PWR

Chemistry Condition :

Condensate Dissolved Oxygen (ppb) :		2.500		
Concentration of 1st Constituent (ppm) :	ethanolamine	2.000	, Sampling at	Final Feed Water
Concentration of 2nd Constituent (ppm) :	None	0.000	, Sampling at	Not Used
Concentration of Ammonia (ppm) :		2.000	, Sampling at	Condensate
Concentration of Hydrazine (ppb) :		225.000	, Sampling at	Final Feed Water
Hydrazine at SG (ppb) :		135.000	, Sampling at	Steam outlet
Hydrazine at MSR drain (ppb) :		270.000		
Concentration of Boron (ppm) :		4.900	, Sampling at	Steam Generator Blowdown
Boron Injection Rate (lbm/hr) :		0.000		

Chemistry Analysis Results :

HBD Item Description	(Note 1) Cold pH	Hot pH	1st Constituent ethanolamine (ppm)	2nd Constituent None (ppm)	Ammonia (ppm)	Hydrazine (ppb)	Dis. Oxy (ppb)	Vent Rate (%)	Flow Rate (Mlb/hr)	Pres (psia)	Temp (F)	Quality	Enthalpy (Btu/lb)
Blowdown Line	8.64	6.25	5.17	0.00	0.48	597.08	0.000	n/a	0.1	778.6	518.0	0.0000	-----
Main Steam Line 1	9.54	6.25	5.14	0.00	0.47	597.08	0.000	n/a	13.02415	-----	518.0	0.9999	-----
Main Steam Line 2	9.54	6.54	6.42	0.00	0.37	623.51	0.000	n/a	10.59295	340.4	429.1	0.9161	1136.9
Main Steam Line 3	9.62	6.70	6.79	0.00	0.34	250.55	0.000	n/a	9.375758	-----	390.6	0.9900	-----
Main Steam Line 4	9.62	8.33	4.68	0.00	0.23	108.21	0.000	n/a	7.205196	5.0	162.6	0.7270	858.0
HP Extraction Steam Line 1	9.54	6.83	9.50	0.00	0.30	934.12	0.000	n/a	0.92908	185.6	375.6	0.9540	1158.3
HP Extraction Steam Line 2	9.54	6.54	6.42	0.00	0.37	623.51	0.000	n/a	0.706255	340.4	429.1	0.9161	1136.9
Moisture Separator Drain Line 1	9.10	6.70	7.06	0.00	0.35	270.00	0.000	n/a	1.217196	221.9	390.6	0.0000	363.3
Reheater Steam & Drain Line 1	9.54	6.26	2.00	0.00	1.78	137.20	0.000	n/a	0.795863	644.7	494.0	0.0201	495.3
LP Extraction Steam Line 1	9.62	7.36	15.05	0.00	0.25	516.12	0.000	n/a	0.502856	65.0	298.0	0.9981	1177.4
LP Extraction Steam Line 2	9.62	7.77	14.62	0.00	0.21	386.27	0.000	n/a	0.475653	27.9	246.1	0.9557	1120.6
LP Extraction Steam Line 3	9.62	7.92	3.78	0.00	0.29	87.75	0.000	n/a	0.408297	10.7	196.5	0.6642	815.4
LP Extraction Steam Line 4	9.62	8.33	4.68	0.00	0.23	108.21	0.000	n/a	0.667055	5.0	162.6	0.7270	858.0
FWH Tube Side Line 1	9.52	6.49	2.00	0.00	1.84	225.00	0.000	0.00	13.12415	-----	423.2	0.0000	-----
FWH Tube Side Line 2	9.59	6.71	1.36	0.00	2.01	262.23	0.000	0.00	9.475758	-----	371.6	0.0000	-----
FWH Tube Side Line 3	9.59	7.18	1.36	0.00	2.00	275.18	0.000	0.00	9.475758	-----	293.6	0.0000	-----
FWH Tube Side Line 4	9.59	7.56	1.36	0.00	2.00	278.93	0.000	0.00	9.475758	-----	243.8	0.0000	-----

HBD Item Description	(Note 1) Cold pH	Hot pH	1st Constituent ethanolamine (ppm)	2nd Constituent None (ppm)	Ammonia (ppm)	Hydrazine (ppb)	Dis. Oxy (ppb)	Vent Rate (%)	Flow Rate (Mlb/hr)	Pres (psia)	Temp (F)	Quality	Enthalpy (Btu/lb)
FWH Tube Side Line 5	9.59	8.05	1.36	0.00	2.00	281.22	0.000	0.00	9.475758	-----	191.8	0.0000	-----
FWH Tube Side Line 6	9.59	8.46	1.36	0.00	2.00	282.18	0.000	0.00	9.475758	-----	155.7	0.0000	-----
FWH Shell Side Line 1	9.54	6.65	1.98	0.00	1.90	135.00	0.000	n/a	1.502118	-----	386.7	0.0000	-----
FWH Shell Side Line 2	9.54	6.71	1.98	0.00	1.90	135.00	0.000	n/a	0.92908	-----	374.1	0.0000	-----
FWH Shell Side Line 3	9.62	7.51	1.32	0.00	2.10	30.81	0.000	n/a	0.502856	-----	250.0	0.0000	-----
FWH Shell Side Line 4	9.62	8.01	1.32	0.00	2.10	30.81	0.000	n/a	0.978509	-----	196.9	0.0000	-----
FWH Shell Side Line 5	9.62	8.39	1.32	0.00	2.10	30.81	0.000	n/a	1.386806	-----	162.5	0.0000	-----
FWH Shell Side Line 6	9.62	9.24	1.32	0.00	2.10	30.81	0.000	n/a	2.053861	-----	100.3	0.0000	-----
Feed Pump Steam & Drain Line 1	9.62	9.27	10.09	0.00	0.13	230.59	0.000	n/a	0.116701	1.0	101.7	0.8734	974.8
Drain Tank Drain Line 1	9.36	6.44	3.67	0.00	1.38	180.04	0.000	0.00	3.648394	403.5	445.4	0.0000	359.1

Notes:
1: For two-phase lines, the cold pH reported is for the mixture of steam and water, and the amine concentrations and hot pH are for the water phase only.
2: For Superheated steam, cold pH, hot pH and amine concentration are not reported since there is no water phase.

Company: Entergy Nuclear Operations, Inc.
Plant: Indian Point
Unit: 3
DB Name: IPEC3

Report Date/Time: 13-Nov-2007 3:28 pm
Analysis Date/Time: 12-Nov-2007 12:15 pm
CHECWORKS SFA Version 2.2 SP-1 (build 70)

Chemistry Analysis Report

Water Treatment : Cycle 11
Power Level : 100.00%
Plant Type : PWR

Chemistry Condition :

Condensate Dissolved Oxygen (ppb) :		3.300		
Concentration of 1st Constituent (ppm) :	ethanolamine	2.400	, Sampling at	Final Feed Water
Concentration of 2nd Constituent (ppm) :	None	0.000	, Sampling at	Not Used
Concentration of Ammonia (ppm) :		5.285	, Sampling at	Final Feed Water
Concentration of Hydrazine (ppb) :		190.000	, Sampling at	Final Feed Water
Hydrazine at SG (ppb) :		114.000	, Sampling at	Steam outlet
Hydrazine at MSR drain (ppb) :		228.000		
Concentration of Boron (ppm) :		0.000	, Sampling at	Not Used
Boron Injection Rate (lbm/hr) :		0.000		

Chemistry Analysis Results :

HBD Item Description	(Note 1) Cold pH	Hot pH	1st Constituent ethanolamine (ppm)	2nd Constituent None (ppm)	Ammonia (ppm)	Hydrazine (ppb)	Dis. Oxy (ppb)	Vent Rate (%)	Flow Rate (Mlb/hr)	Pres (psia)	Temp (F)	Quality	Enthalpy (Btu/lb)
Blowdown Line	9.74	6.32	6.09	0.00	1.33	504.20	0.000	n/a	0.1	778.6	518.0	0.0000	-----
Main Steam Line 1	9.86	6.32	6.08	0.00	1.33	504.20	0.000	n/a	13.02415	-----	518.0	0.9999	-----
Main Steam Line 2	9.86	6.60	7.58	0.00	1.04	526.52	0.000	n/a	10.59295	340.4	429.1	0.9161	1136.9
Main Steam Line 3	9.87	6.77	8.01	0.00	0.95	211.58	0.000	n/a	9.375758	-----	390.6	0.9900	-----
Main Steam Line 4	9.87	8.43	5.67	0.00	0.60	91.38	0.000	n/a	7.205196	5.0	162.6	0.7270	858.0
HP Extraction Steam Line 1	9.86	6.90	11.14	0.00	0.83	788.82	0.000	n/a	0.92908	185.6	375.6	0.9540	1158.3
HP Extraction Steam Line 2	9.86	6.60	7.58	0.00	1.04	526.52	0.000	n/a	0.706255	340.4	429.1	0.9161	1136.9
Moisture Separator Drain Line 1	9.77	6.77	8.33	0.00	0.95	228.00	0.000	n/a	1.217196	221.9	390.6	0.0000	363.3
Reheater Steam & Drain Line 1	9.86	6.42	2.40	0.00	5.01	115.86	0.000	n/a	0.795863	644.7	494.0	0.0201	495.3
LP Extraction Steam Line 1	9.87	7.45	17.49	0.00	0.68	435.84	0.000	n/a	0.502856	65.0	298.0	0.9981	1177.4
LP Extraction Steam Line 2	9.87	7.84	17.38	0.00	0.59	326.19	0.000	n/a	0.475653	27.9	246.1	0.9557	1120.6
LP Extraction Steam Line 3	9.87	8.03	4.57	0.00	0.76	74.10	0.000	n/a	0.408297	10.7	196.5	0.6642	815.4
LP Extraction Steam Line 4	9.87	8.43	5.67	0.00	0.60	91.38	0.000	n/a	0.667055	5.0	162.6	0.7270	858.0
FWH Tube Side Line 1	9.86	6.67	2.40	0.00	5.28	190.01	0.000	0.00	13.12415	-----	423.2	0.0000	-----
FWH Tube Side Line 2	9.86	6.91	1.65	0.00	5.82	221.47	0.000	0.00	9.475758	-----	371.6	0.0000	-----
FWH Tube Side Line 3	9.86	7.39	1.65	0.00	5.81	232.66	0.000	0.00	9.475758	-----	293.6	0.0000	-----
FWH Tube Side Line 4	9.86	7.78	1.65	0.00	5.81	236.13	0.000	0.00	9.475758	-----	243.8	0.0000	-----

HBD Item Description	(Note 1) Cold pH	Hot pH	1st Constituent ethanolamine (ppm)	2nd Constituent None (ppm)	Ammonia (ppm)	Hydrazine (ppb)	Dis. Oxy (ppb)	Vent Rate (%)	Flow Rate (Mlb/hr)	Pres (psia)	Temp (F)	Quality	Enthalpy (Btu/lb)
FWH Tube Side Line 5	9.86	8.29	1.65	0.00	5.81	238.36	0.000	0.00	9.475758	-----	191.8	0.0000	-----
FWH Tube Side Line 6	9.86	8.70	1.65	0.00	5.81	239.34	0.000	0.00	9.475758	-----	155.7	0.0000	-----
FWH Shell Side Line 1	9.86	6.83	2.37	0.00	5.35	114.00	0.000	n/a	1.502118	-----	386.7	0.0000	-----
FWH Shell Side Line 2	9.86	6.90	2.37	0.00	5.35	114.00	0.000	n/a	0.92908	-----	374.1	0.0000	-----
FWH Shell Side Line 3	9.87	7.73	1.60	0.00	5.93	26.02	0.000	n/a	0.502856	-----	250.0	0.0000	-----
FWH Shell Side Line 4	9.87	8.23	1.60	0.00	5.93	26.02	0.000	n/a	0.978509	-----	196.9	0.0000	-----
FWH Shell Side Line 5	9.87	8.62	1.60	0.00	5.93	26.02	0.000	n/a	1.386806	-----	162.5	0.0000	-----
FWH Shell Side Line 6	9.87	9.48	1.60	0.00	5.93	26.02	0.000	n/a	2.053861	-----	100.3	0.0000	-----
Feed Pump Steam & Drain Line 1	9.87	9.42	12.22	0.00	0.33	194.72	0.000	n/a	0.116701	1.0	101.7	0.8734	974.8
Drain Tank Drain Line 1	9.83	6.58	4.36	0.00	3.88	152.03	0.000	0.00	3.648394	403.5	445.4	0.0000	359.1

Notes:
1: For two-phase lines, the cold pH reported is for the mixture of steam and water, and the amine concentrations and hot pH are for the water phase only.
2: For Superheated steam, cold pH, hot pH and amine concentration are not reported since there is no water phase.

Company: Entergy Nuclear Operations, Inc.
Plant: Indian Point
Unit: 3
DB Name: IPEC3

Report Date/Time: 13-Nov-2007 3:29 pm
Analysis Date/Time: 12-Nov-2007 12:15 pm
CHECWORKS SFA Version 2.2 SP-1 (build 70)

Chemistry Analysis Report

Water Treatment : Cycle 12
Power Level : 100.00%
Plant Type : PWR

Chemistry Condition :

Condensate Dissolved Oxygen (ppb) :		0.690		
Concentration of 1st Constituent (ppm) :	ethanolamine	3.558	, Sampling at	Final Feed Water
Concentration of 2nd Constituent (ppm) :	None	0.000	, Sampling at	Not Used
Concentration of Ammonia (ppm) :		5.830	, Sampling at	Final Feed Water
Concentration of Hydrazine (ppb) :		104.657	, Sampling at	Final Feed Water
Hydrazine at SG (ppb) :		62.794	, Sampling at	Steam outlet
Hydrazine at MSR drain (ppb) :		125.589		
Concentration of Boron (ppm) :		0.000	, Sampling at	Not Used
Boron Injection Rate (lbm/hr) :		0.000		

Chemistry Analysis Results :

HBD Item Description	(Note 1) Cold pH	Hot pH	1st Constituent ethanolamine (ppm)	2nd Constituent None (ppm)	Ammonia (ppm)	Hydrazine (ppb)	Dis. Oxy (ppb)	Vent Rate (%)	Flow Rate (Mlb/hr)	Pres (psia)	Temp (F)	Quality	Enthalpy (Btu/lb)
Blowdown Line	9.81	6.38	8.92	0.00	1.45	277.72	0.000	n/a	0.1	778.6	518.0	0.0000	-----
Main Steam Line 1	9.89	6.38	8.91	0.00	1.45	277.72	0.000	n/a	13.02415	-----	518.0	0.9999	-----
Main Steam Line 2	9.89	6.67	11.05	0.00	1.13	290.02	0.000	n/a	10.59295	340.4	429.1	0.9161	1136.9
Main Steam Line 3	9.90	6.84	11.69	0.00	1.03	116.54	0.000	n/a	9.375758	-----	390.6	0.9900	-----
Main Steam Line 4	9.90	8.52	8.48	0.00	0.63	50.33	0.000	n/a	7.205196	5.0	162.6	0.7270	858.0
HP Extraction Steam Line 1	9.89	6.98	16.17	0.00	0.90	434.50	0.000	n/a	0.92908	185.6	375.6	0.9540	1158.3
HP Extraction Steam Line 2	9.89	6.67	11.05	0.00	1.13	290.02	0.000	n/a	0.706255	340.4	429.1	0.9161	1136.9
Moisture Separator Drain Line 1	9.85	6.85	12.14	0.00	1.02	125.59	0.000	n/a	1.217196	221.9	390.6	0.0000	363.3
Reheater Steam & Drain Line 1	9.89	6.46	3.56	0.00	5.50	63.82	0.000	n/a	0.795863	644.7	494.0	0.0201	495.3
LP Extraction Steam Line 1	9.90	7.53	25.35	0.00	0.73	240.07	0.000	n/a	0.502856	65.0	298.0	0.9981	1177.4
LP Extraction Steam Line 2	9.90	7.93	25.48	0.00	0.63	179.67	0.000	n/a	0.475653	27.9	246.1	0.9557	1120.6
LP Extraction Steam Line 3	9.90	8.11	6.84	0.00	0.80	40.82	0.000	n/a	0.408297	10.7	196.5	0.6642	815.4
LP Extraction Steam Line 4	9.90	8.52	8.48	0.00	0.63	50.33	0.000	n/a	0.667055	5.0	162.6	0.7270	858.0
FWH Tube Side Line 1	9.89	6.71	3.56	0.00	5.83	104.66	0.000	0.00	13.12415	-----	423.2	0.0000	-----
FWH Tube Side Line 2	9.90	6.94	2.47	0.00	6.43	121.99	0.000	0.00	9.475758	-----	371.6	0.0000	-----
FWH Tube Side Line 3	9.90	7.42	2.47	0.00	6.43	128.00	0.000	0.00	9.475758	-----	293.6	0.0000	-----
FWH Tube Side Line 4	9.90	7.82	2.47	0.00	6.42	129.64	0.000	0.00	9.475758	-----	243.8	0.0000	-----

HBD Item Description	(Note 1) Cold pH	Hot pH	1st Constituent ethanolamine (ppm)	2nd Constituent None (ppm)	Ammonia (ppm)	Hydrazine (ppb)	Dis. Oxy (ppb)	Vent Rate (%)	Flow Rate (Mlb/hr)	Pres (psia)	Temp (F)	Quality	Enthalpy (Btu/lb)
FWH Tube Side Line 5	9.90	8.32	2.47	0.00	6.42	130.54	0.000	0.00	9.475758	-----	191.8	0.0000	-----
FWH Tube Side Line 6	9.90	8.73	2.47	0.00	6.42	130.89	0.000	0.00	9.475758	-----	155.7	0.0000	-----
FWH Shell Side Line 1	9.89	6.87	3.52	0.00	5.89	62.79	0.000	n/a	1.502118	-----	386.7	0.0000	-----
FWH Shell Side Line 2	9.89	6.93	3.52	0.00	5.89	62.79	0.000	n/a	0.92908	-----	374.1	0.0000	-----
FWH Shell Side Line 3	9.90	7.77	2.40	0.00	6.52	14.33	0.000	n/a	0.502856	-----	250.0	0.0000	-----
FWH Shell Side Line 4	9.90	8.27	2.40	0.00	6.52	14.33	0.000	n/a	0.978509	-----	196.9	0.0000	-----
FWH Shell Side Line 5	9.90	8.65	2.40	0.00	6.52	14.33	0.000	n/a	1.386806	-----	162.5	0.0000	-----
FWH Shell Side Line 6	9.90	9.51	2.40	0.00	6.52	14.33	0.000	n/a	2.053861	-----	100.3	0.0000	-----
Feed Pump Steam & Drain Line 1	9.90	9.51	18.28	0.00	0.35	107.26	0.000	n/a	0.116701	1.0	101.7	0.8734	974.8
Drain Tank Drain Line 1	9.88	6.62	6.39	0.00	4.26	83.74	0.000	0.00	3.648394	403.5	445.4	0.0000	359.1

Notes:
1: For two-phase lines, the cold pH reported is for the mixture of steam and water, and the amine concentrations and hot pH are for the water phase only.
2: For Superheated steam, cold pH, hot pH and amine concentration are not reported since there is no water phase.

Company: Entergy Nuclear Operations, Inc.
Plant: Indian Point
Unit: 3
DB Name: IPEC3

Report Date/Time: 13-Nov-2007 3:29 pm
Analysis Date/Time: 12-Nov-2007 12:15 pm

CHECWORKS SFA Version 2.2 SP-1 (build 70)

Chemistry Analysis Report

Water Treatment : Cycle 12
Power Level : 101.12%
Plant Type : PWR

Chemistry Condition :

Condensate Dissolved Oxygen (ppb) :		0.690		
Concentration of 1st Constituent (ppm) :	ethanolamine	3.558	, Sampling at	Final Feed Water
Concentration of 2nd Constituent (ppm) :	None	0.000	, Sampling at	Not Used
Concentration of Ammonia (ppm) :		5.830	, Sampling at	Final Feed Water
Concentration of Hydrazine (ppb) :		104.657	, Sampling at	Final Feed Water
Hydrazine at SG (ppb) :		62.794	, Sampling at	Steam outlet
Hydrazine at MSR drain (ppb) :		125.589		
Concentration of Boron (ppm) :		0.000	, Sampling at	Not Used
Boron Injection Rate (lbm/hr) :		0.000		

Chemistry Analysis Results :

HBD Item Description	(Note 1) Cold pH	Hot pH	1st Constituent ethanolamine (ppm)	2nd Constituent None (ppm)	Ammonia (ppm)	Hydrazine (ppb)	Dis. Oxy (ppb)	Vent Rate (%)	Flow Rate (Mlb/hr)	Pres (psia)	Temp (F)	Quality	Enthalpy (Btu/lb)
Blowdown Line	9.81	6.39	9.07	0.00	1.43	281.15	0.000	n/a	0.057785	774.4	514.5	0.0000	-----
Main Steam Line 1	9.89	6.39	9.06	0.00	1.43	281.15	0.000	n/a	13.18687	-----	514.5	0.9992	-----
Main Steam Line 2	9.89	6.65	10.86	0.00	1.14	285.48	0.000	n/a	10.545	361.4	434.8	0.9172	1138.6
Main Steam Line 3	9.90	6.91	13.19	0.00	0.97	115.97	0.000	n/a	9.622492	-----	381.7	0.9900	-----
Main Steam Line 4	9.90	8.52	10.75	0.00	0.57	56.48	0.000	n/a	7.266111	5.6	166.7	0.7738	907.0
HP Extraction Steam Line 1	9.89	6.93	14.94	0.00	0.94	389.73	0.000	n/a	0.935949	200.9	382.2	0.9404	1148.2
HP Extraction Steam Line 2	9.89	6.65	10.86	0.00	1.14	285.48	0.000	n/a	0.751563	361.4	434.8	0.9172	1138.6
Moisture Separator Drain Line 1	9.88	6.92	13.73	0.00	0.96	125.67	0.000	n/a	0.922509	199.8	381.7	0.0007	355.9
Reheater Steam & Drain Line 1	9.89	6.46	3.63	0.00	5.13	64.95	0.000	n/a	0.954357	623.3	490.3	0.0414	506.5
LP Extraction Steam Line 1	Note 2	Note 2	Note 2	Note 2	Note 2	Note 2	0.000	n/a	0.53128	74.5	307.2	1.0000	1197.4
LP Extraction Steam Line 2	9.90	7.79	17.80	0.00	0.67	103.84	0.000	n/a	0.447417	31.3	252.8	0.9055	1075.7
LP Extraction Steam Line 3	9.90	8.09	9.54	0.00	0.70	50.65	0.000	n/a	0.458881	12.8	205.1	0.7520	906.1
LP Extraction Steam Line 4	9.90	8.52	10.75	0.00	0.57	56.48	0.000	n/a	0.771656	5.6	166.7	0.7738	907.0
FWH Tube Side Line 1	9.89	6.70	3.56	0.00	5.83	104.66	0.000	0.00	13.24466	-----	425.0	0.0000	-----
FWH Tube Side Line 2	9.89	6.93	2.60	0.00	6.28	123.14	0.000	0.00	9.680277	-----	374.7	0.0000	-----
FWH Tube Side Line 3	9.89	7.40	2.60	0.00	6.27	129.34	0.000	0.00	9.680277	-----	296.6	0.0000	-----
FWH Tube Side Line 4	9.89	7.82	2.60	0.00	6.27	131.12	0.000	0.00	9.680277	-----	243.0	0.0000	-----

HBD Item Description	(Note 1) Cold pH	Hot pH	1st Constituent ethanolamine (ppm)	2nd Constituent None (ppm)	Ammonia (ppm)	Hydrazine (ppb)	Dis. Oxy (ppb)	Vent Rate (%)	Flow Rate (Mlb/hr)	Pres (psia)	Temp (F)	Quality	Enthalpy (Btu/lb)
FWH Tube Side Line 5	9.89	8.27	2.60	0.00	6.27	131.92	0.000	0.00	9.680277	-----	196.4	0.0000	-----
FWH Tube Side Line 6	9.89	8.74	2.60	0.00	6.27	132.33	0.000	0.00	9.680277	-----	155.3	0.0000	-----
FWH Shell Side Line 1	9.89	6.85	3.53	0.00	5.87	62.79	0.000	n/a	1.70592	-----	390.3	0.0000	-----
FWH Shell Side Line 2	9.89	6.92	3.53	0.00	5.87	62.79	0.000	n/a	0.935949	-----	376.9	0.0000	-----
FWH Shell Side Line 3	9.90	7.76	2.56	0.00	6.34	13.52	0.000	n/a	0.53128	-----	250.6	0.0000	-----
FWH Shell Side Line 4	9.90	8.21	2.56	0.00	6.34	13.52	0.000	n/a	0.978697	-----	202.2	0.0000	-----
FWH Shell Side Line 5	9.90	8.64	2.56	0.00	6.34	13.52	0.000	n/a	1.437578	-----	163.7	0.0000	-----
FWH Shell Side Line 6	9.90	9.69	2.56	0.00	6.34	13.52	0.000	n/a	2.209234	-----	88.7	0.0000	-----
Feed Pump Steam & Drain Line 1	9.90	9.53	19.71	0.00	0.34	102.26	0.000	n/a	0.147147	1.0	101.7	0.8749	976.3
Drain Tank Drain Line 1	9.89	6.90	6.17	0.00	4.60	79.05	0.000	0.00	3.564378	197.7	380.8	0.0000	338.7

Notes:
1: For two-phase lines, the cold pH reported is for the mixture of steam and water, and the amine concentrations and hot pH are for the water phase only.
2: For Superheated steam, cold pH, hot pH and amine concentration are not reported since there is no water phase.

Company: Entergy Nuclear Operations, Inc.
Plant: Indian Point
Unit: 3
DB Name: IPEC3

Report Date/Time: 13-Nov-2007 3:30 pm
Analysis Date/Time: 12-Nov-2007 12:15 pm

CHECWORKS SFA Version 2.2 SP-1 (build 70)

Chemistry Analysis Report

Water Treatment : Cycle 13
Power Level : 101.12%
Plant Type : PWR

Chemistry Condition :

Condensate Dissolved Oxygen (ppb) :		3.340		
Concentration of 1st Constituent (ppm) :	ethanolamine	3.423	, Sampling at	Final Feed Water
Concentration of 2nd Constituent (ppm) :	None	0.000	, Sampling at	Not Used
Concentration of Ammonia (ppm) :		4.886	, Sampling at	Final Feed Water
Concentration of Hydrazine (ppb) :		98.400	, Sampling at	Final Feed Water
Hydrazine at SG (ppb) :		58.100	, Sampling at	Steam outlet
Hydrazine at MSR drain (ppb) :		116.100		
Concentration of Boron (ppm) :		0.000	, Sampling at	Not Used
Boron Injection Rate (lbm/hr) :		0.000		

Chemistry Analysis Results :

HBD Item Description	(Note 1) Cold pH	Hot pH	1st Constituent ethanolamine (ppm)	2nd Constituent None (ppm)	Ammonia (ppm)	Hydrazine (ppb)	Dis. Oxy (ppb)	Vent Rate (%)	Flow Rate (Mlb/hr)	Pres (psia)	Temp (F)	Quality	Enthalpy (Btu/lb)
Blowdown Line	9.79	6.38	8.74	0.00	1.20	260.13	0.000	n/a	0.057785	774.4	514.5	0.0000	-----
Main Steam Line 1	9.86	6.38	8.74	0.00	1.20	260.13	0.000	n/a	13.18687	-----	514.5	0.9992	-----
Main Steam Line 2	9.86	6.64	10.47	0.00	0.96	264.14	0.000	n/a	10.545	361.4	434.8	0.9172	1138.6
Main Steam Line 3	9.86	6.90	12.72	0.00	0.82	107.21	0.000	n/a	9.622492	-----	381.7	0.9900	-----
Main Steam Line 4	9.86	8.51	10.33	0.00	0.48	52.21	0.000	n/a	7.266111	5.6	166.7	0.7738	907.0
HP Extraction Steam Line 1	9.86	6.92	14.42	0.00	0.79	360.60	0.000	n/a	0.935949	200.9	382.2	0.9404	1148.2
HP Extraction Steam Line 2	9.86	6.64	10.47	0.00	0.96	264.14	0.000	n/a	0.751563	361.4	434.8	0.9172	1138.6
Moisture Separator Drain Line 1	9.86	6.90	13.25	0.00	0.81	116.18	0.000	n/a	0.922509	199.8	381.7	0.0007	355.9
Reheater Steam & Drain Line 1	9.86	6.43	3.49	0.00	4.30	60.09	0.000	n/a	0.954357	623.3	490.3	0.0414	506.5
LP Extraction Steam Line 1	Note 2	Note 2	Note 2	Note 2	Note 2	Note 2	0.000	n/a	0.53128	74.5	307.2	1.0000	1197.4
LP Extraction Steam Line 2	9.86	7.78	17.14	0.00	0.57	96.00	0.000	n/a	0.447417	31.3	252.8	0.9055	1075.7
LP Extraction Steam Line 3	9.86	8.07	9.17	0.00	0.59	46.82	0.000	n/a	0.458881	12.8	205.1	0.7520	906.1
LP Extraction Steam Line 4	9.86	8.51	10.33	0.00	0.48	52.21	0.000	n/a	0.771656	5.6	166.7	0.7738	907.0
FWH Tube Side Line 1	9.86	6.67	3.42	0.00	4.89	98.41	0.000	0.00	13.24466	-----	425.0	0.0000	-----
FWH Tube Side Line 2	9.86	6.89	2.49	0.00	5.26	116.36	0.000	0.00	9.680277	-----	374.7	0.0000	-----
FWH Tube Side Line 3	9.86	7.36	2.49	0.00	5.26	122.84	0.000	0.00	9.680277	-----	296.6	0.0000	-----
FWH Tube Side Line 4	9.86	7.79	2.49	0.00	5.26	125.23	0.000	0.00	9.680277	-----	243.0	0.0000	-----

HBD Item Description	(Note 1) Cold pH	Hot pH	1st Constituent ethanolamine (ppm)	2nd Constituent None (ppm)	Ammonia (ppm)	Hydrazine (ppb)	Dis. Oxy (ppb)	Vent Rate (%)	Flow Rate (Mlb/hr)	Pres (psia)	Temp (F)	Quality	Enthalpy (Btu/lb)
FWH Tube Side Line 5	9.86	8.23	2.49	0.00	5.26	126.54	0.000	0.00	9.680277	-----	196.4	0.0000	-----
FWH Tube Side Line 6	9.86	8.70	2.49	0.00	5.26	127.28	0.000	0.00	9.680277	-----	155.3	0.0000	-----
FWH Shell Side Line 1	9.86	6.82	3.40	0.00	4.92	58.10	0.000	n/a	1.70592	-----	390.3	0.0000	-----
FWH Shell Side Line 2	9.86	6.89	3.40	0.00	4.92	58.10	0.000	n/a	0.935949	-----	376.9	0.0000	-----
FWH Shell Side Line 3	9.86	7.72	2.46	0.00	5.32	12.50	0.000	n/a	0.53128	-----	250.6	0.0000	-----
FWH Shell Side Line 4	9.86	8.17	2.46	0.00	5.32	12.50	0.000	n/a	0.978697	-----	202.2	0.0000	-----
FWH Shell Side Line 5	9.86	8.60	2.46	0.00	5.32	12.50	0.000	n/a	1.437578	-----	163.7	0.0000	-----
FWH Shell Side Line 6	9.86	9.66	2.46	0.00	5.32	12.50	0.000	n/a	2.209234	-----	88.7	0.0000	-----
Feed Pump Steam & Drain Line 1	9.86	9.52	18.94	0.00	0.29	94.54	0.000	n/a	0.147147	1.0	101.7	0.8749	976.3
Drain Tank Drain Line 1	9.86	6.88	5.95	0.00	3.86	73.11	0.000	0.00	3.564378	197.7	380.8	0.0000	338.7

Notes:
1: For two-phase lines, the cold pH reported is for the mixture of steam and water, and the amine concentrations and hot pH are for the water phase only.
2: For Superheated steam, cold pH, hot pH and amine concentration are not reported since there is no water phase.

Company: Entergy Nuclear Operations, Inc.
Plant: Indian Point
Unit: 3
DB Name: IPEC3

Report Date/Time: 13-Nov-2007 3:30 pm
Analysis Date/Time: 12-Nov-2007 12:16 pm
CHECWORKS SFA Version 2.2 SP-1 (build 70)

Chemistry Analysis Report

Water Treatment : Cycle 14
Power Level : 104.95%
Plant Type : PWR

Chemistry Condition :

Condensate Dissolved Oxygen (ppb) :		2.987		
Concentration of 1st Constituent (ppm) :	ethanolamine	4.808	, Sampling at	Final Feed Water
Concentration of 2nd Constituent (ppm) :	None	0.000	, Sampling at	Not Used
Concentration of Ammonia (ppm) :		3.600	, Sampling at	Final Feed Water
Concentration of Hydrazine (ppb) :		55.730	, Sampling at	Final Feed Water
Hydrazine at SG (ppb) :		33.440	, Sampling at	Steam outlet
Hydrazine at MSR drain (ppb) :		66.880		
Concentration of Boron (ppm) :		0.000	, Sampling at	Not Used
Boron Injection Rate (lbm/hr) :		0.000		

Chemistry Analysis Results :

HBD Item Description	(Note 1) Cold pH	Hot pH	1st Constituent ethanolamine (ppm)	2nd Constituent None (ppm)	Ammonia (ppm)	Hydrazine (ppb)	Dis. Oxy (ppb)	Vent Rate (%)	Flow Rate (Mlb/hr)	Pres (psia)	Temp (F)	Quality	Enthalpy (Btu/lb)
Blowdown Line	9.85	6.43	12.27	0.00	0.87	151.06	0.000	n/a	0.057785	760.4	512.4	0.0000	-----
Main Steam Line 1	9.83	6.43	12.26	0.00	0.87	151.06	0.000	n/a	13.7838	-----	512.4	0.9992	-----
Main Steam Line 2	9.83	6.67	14.71	0.00	0.71	160.22	0.000	n/a	11.07654	388.6	441.8	0.9371	1155.1
Main Steam Line 3	9.82	6.93	16.82	0.00	0.61	61.87	0.000	n/a	9.978813	-----	384.8	0.9900	-----
Main Steam Line 4	9.82	8.56	14.00	0.00	0.35	30.33	0.000	n/a	7.530174	5.8	168.3	0.7711	905.2
HP Extraction Steam Line 1	9.83	6.97	19.51	0.00	0.58	202.87	0.000	n/a	0.984482	208.3	385.2	0.9386	1147.3
HP Extraction Steam Line 2	9.83	6.67	14.71	0.00	0.71	160.22	0.000	n/a	0.852604	388.6	441.8	0.9371	1155.1
Moisture Separator Drain Line 1	9.92	6.94	17.48	0.00	0.60	66.89	0.000	n/a	1.097732	207.2	384.8	0.0002	358.7
Reheater Steam & Drain Line 1	9.83	6.42	4.90	0.00	3.18	34.53	0.000	n/a	0.870169	620.3	489.8	0.0395	504.5
LP Extraction Steam Line 1	Note 2	Note 2	Note 2	Note 2	Note 2	Note 2	0.000	n/a	0.548842	77.3	309.6	1.0000	1197.6
LP Extraction Steam Line 2	9.82	7.83	23.11	0.00	0.42	56.14	0.000	n/a	0.472533	32.4	254.8	0.9054	1076.5
LP Extraction Steam Line 3	9.82	8.12	12.50	0.00	0.43	27.37	0.000	n/a	0.475753	13.3	206.9	0.7508	905.9
LP Extraction Steam Line 4	9.82	8.56	14.00	0.00	0.35	30.33	0.000	n/a	0.790585	5.8	168.3	0.7711	905.2
FWH Tube Side Line 1	9.83	6.63	4.81	0.00	3.60	55.75	0.000	0.00	13.84159	-----	430.4	0.0000	-----
FWH Tube Side Line 2	9.82	6.85	3.43	0.00	3.92	66.30	0.000	0.00	10.0366	-----	377.3	0.0000	-----
FWH Tube Side Line 3	9.82	7.32	3.43	0.00	3.92	70.60	0.000	0.00	10.0366	-----	298.3	0.0000	-----
FWH Tube Side Line 4	9.82	7.73	3.43	0.00	3.92	72.22	0.000	0.00	10.0366	-----	245.2	0.0000	-----

HBD Item Description	(Note 1) Cold pH	Hot pH	1st Constituent ethanolamine (ppm)	2nd Constituent None (ppm)	Ammonia (ppm)	Hydrazine (ppb)	Dis. Oxy (ppb)	Vent Rate (%)	Flow Rate (Mlb/hr)	Pres (psia)	Temp (F)	Quality	Enthalpy (Btu/lb)
FWH Tube Side Line 5	9.82	8.18	3.43	0.00	3.92	73.16	0.000	0.00	10.0366	-----	198.0	0.0000	-----
FWH Tube Side Line 6	9.82	8.64	3.43	0.00	3.92	73.65	0.000	0.00	10.0366	-----	156.9	0.0000	-----
FWH Shell Side Line 1	9.83	6.78	4.78	0.00	3.62	33.44	0.000	n/a	1.722773	-----	394.2	0.0000	-----
FWH Shell Side Line 2	9.83	6.85	4.78	0.00	3.62	33.44	0.000	n/a	0.984482	-----	379.8	0.0000	-----
FWH Shell Side Line 3	9.82	7.66	3.38	0.00	3.96	7.35	0.000	n/a	0.548842	-----	253.0	0.0000	-----
FWH Shell Side Line 4	9.82	8.12	3.38	0.00	3.96	7.35	0.000	n/a	1.021375	-----	204.1	0.0000	-----
FWH Shell Side Line 5	9.82	8.54	3.38	0.00	3.96	7.35	0.000	n/a	1.497128	-----	165.7	0.0000	-----
FWH Shell Side Line 6	9.82	9.57	3.38	0.00	3.96	7.35	0.000	n/a	2.287713	-----	91.8	0.0000	-----
Feed Pump Steam & Drain Line 1	9.82	9.59	25.73	0.00	0.21	54.98	0.000	n/a	0.160926	1.0	101.7	0.8734	974.8
Drain Tank Drain Line 1	9.86	6.87	8.44	0.00	2.75	43.09	0.000	0.00	3.804987	203.3	383.2	0.0000	342.5

Notes:
1: For two-phase lines, the cold pH reported is for the mixture of steam and water, and the amine concentrations and hot pH are for the water phase only.
2: For Superheated steam, cold pH, hot pH and amine concentration are not reported since there is no water phase.

Company: Entergy Nuclear Operations, Inc.
Plant: Indian Point
Unit: 3
DB Name: IPEC3

Report Date/Time: 13-Nov-2007 3:30 pm
Analysis Date/Time: 12-Nov-2007 12:16 pm
CHECWORKS SFA Version 2.2 SP-1 (build 70)

Chemistry Analysis Report

Water Treatment : Cycle 15 (estimated)
Power Level : 104.95%
Plant Type : PWR

Chemistry Condition :

Condensate Dissolved Oxygen (ppb) :		2.987		
Concentration of 1st Constituent (ppm) :	ethanolamine	4.808	, Sampling at	Final Feed Water
Concentration of 2nd Constituent (ppm) :	None	0.000	, Sampling at	Not Used
Concentration of Ammonia (ppm) :		3.600	, Sampling at	Final Feed Water
Concentration of Hydrazine (ppb) :		55.730	, Sampling at	Final Feed Water
Hydrazine at SG (ppb) :		33.440	, Sampling at	Steam outlet
Hydrazine at MSR drain (ppb) :		66.880		
Concentration of Boron (ppm) :		0.000	, Sampling at	Not Used
Boron Injection Rate (lbm/hr) :		0.000		

Chemistry Analysis Results :

HBD Item Description	(Note 1) Cold pH	Hot pH	1st Constituent ethanolamine (ppm)	2nd Constituent None (ppm)	Ammonia (ppm)	Hydrazine (ppb)	Dis. Oxy (ppb)	Vent Rate (%)	Flow Rate (Mlb/hr)	Pres (psia)	Temp (F)	Quality	Enthalpy (Btu/lb)
Blowdown Line	9.85	6.43	12.27	0.00	0.87	151.06	0.000	n/a	0.057785	760.4	512.4	0.0000	-----
Main Steam Line 1	9.83	6.43	12.26	0.00	0.87	151.06	0.000	n/a	13.7838	-----	512.4	0.9992	-----
Main Steam Line 2	9.83	6.67	14.71	0.00	0.71	160.22	0.000	n/a	11.07654	388.6	441.8	0.9371	1155.1
Main Steam Line 3	9.82	6.93	16.82	0.00	0.61	61.87	0.000	n/a	9.978813	-----	384.8	0.9900	-----
Main Steam Line 4	9.82	8.56	14.00	0.00	0.35	30.33	0.000	n/a	7.530174	5.8	168.3	0.7711	905.2
HP Extraction Steam Line 1	9.83	6.97	19.51	0.00	0.58	202.87	0.000	n/a	0.984482	208.3	385.2	0.9386	1147.3
HP Extraction Steam Line 2	9.83	6.67	14.71	0.00	0.71	160.22	0.000	n/a	0.852604	388.6	441.8	0.9371	1155.1
Moisture Separator Drain Line 1	9.92	6.94	17.48	0.00	0.60	66.89	0.000	n/a	1.097732	207.2	384.8	0.0002	358.7
Reheater Steam & Drain Line 1	9.83	6.42	4.90	0.00	3.18	34.53	0.000	n/a	0.870169	620.3	489.8	0.0395	504.5
LP Extraction Steam Line 1	Note 2	Note 2	Note 2	Note 2	Note 2	Note 2	0.000	n/a	0.548842	77.3	309.6	1.0000	1197.6
LP Extraction Steam Line 2	9.82	7.83	23.11	0.00	0.42	56.14	0.000	n/a	0.472533	32.4	254.8	0.9054	1076.5
LP Extraction Steam Line 3	9.82	8.12	12.50	0.00	0.43	27.37	0.000	n/a	0.475753	13.3	206.9	0.7508	905.9
LP Extraction Steam Line 4	9.82	8.56	14.00	0.00	0.35	30.33	0.000	n/a	0.790585	5.8	168.3	0.7711	905.2
FWH Tube Side Line 1	9.83	6.63	4.81	0.00	3.60	55.75	0.000	0.00	13.84159	-----	430.4	0.0000	-----
FWH Tube Side Line 2	9.82	6.85	3.43	0.00	3.92	66.30	0.000	0.00	10.0366	-----	377.3	0.0000	-----
FWH Tube Side Line 3	9.82	7.32	3.43	0.00	3.92	70.60	0.000	0.00	10.0366	-----	298.3	0.0000	-----
FWH Tube Side Line 4	9.82	7.73	3.43	0.00	3.92	72.22	0.000	0.00	10.0366	-----	245.2	0.0000	-----

HBD Item Description	(Note 1) Cold pH	Hot pH	1st Constituent ethanolamine (ppm)	2nd Constituent None (ppm)	Ammonia (ppm)	Hydrazine (ppb)	Dis. Oxy (ppb)	Vent Rate (%)	Flow Rate (Mlb/hr)	Pres (psia)	Temp (F)	Quality	Enthalpy (Btu/lb)
FWH Tube Side Line 5	9.82	8.18	3.43	0.00	3.92	73.16	0.000	0.00	10.0366	-----	198.0	0.0000	-----
FWH Tube Side Line 6	9.82	8.64	3.43	0.00	3.92	73.65	0.000	0.00	10.0366	-----	156.9	0.0000	-----
FWH Shell Side Line 1	9.83	6.78	4.78	0.00	3.62	33.44	0.000	n/a	1.722773	-----	394.2	0.0000	-----
FWH Shell Side Line 2	9.83	6.85	4.78	0.00	3.62	33.44	0.000	n/a	0.984482	-----	379.8	0.0000	-----
FWH Shell Side Line 3	9.82	7.66	3.38	0.00	3.96	7.35	0.000	n/a	0.548842	-----	253.0	0.0000	-----
FWH Shell Side Line 4	9.82	8.12	3.38	0.00	3.96	7.35	0.000	n/a	1.021375	-----	204.1	0.0000	-----
FWH Shell Side Line 5	9.82	8.54	3.38	0.00	3.96	7.35	0.000	n/a	1.497128	-----	165.7	0.0000	-----
FWH Shell Side Line 6	9.82	9.57	3.38	0.00	3.96	7.35	0.000	n/a	2.287713	-----	91.8	0.0000	-----
Feed Pump Steam & Drain Line 1	9.82	9.59	25.73	0.00	0.21	54.98	0.000	n/a	0.160926	1.0	101.7	0.8734	974.8
Drain Tank Drain Line 1	9.86	6.87	8.44	0.00	2.75	43.09	0.000	0.00	3.804987	203.3	383.2	0.0000	342.5

Notes:
1: For two-phase lines, the cold pH reported is for the mixture of steam and water, and the amine concentrations and hot pH are for the water phase only.
2: For Superheated steam, cold pH, hot pH and amine concentration are not reported since there is no water phase.