United States Nuclear Regulatory Commission Official Hearing Exhibit
In the Matter of: Entergy Nuclear Operations, Inc.
(Indian Point Nuclear Generating Units 2 and 3)
ASLBP #: 07-858-03-LR-BD01
Docket #: 05000247 | 05000286
Exhibit #: ENT000073-00-BD01
Identified: 10/15/2012
Admitted: 10/15/2012
Withdrawn:
Rejected:
Stricken:
Other:

ENT000073
Submitted: March 28, 2012

Indian Point Unit 3
CHECWORKS Power Uprate Analysis

Calculation No. 040711-01
Revision 0
Issued For-Use

March 23, 2005

prepared for:

Entergy Nuclear Northeast
295 Broadway Suite 3
PO Box 308
Buchanan, NY 10511-0308

prepared by:

CSI TECHNOLOGIES, INC.
1051 E. Main St., Suite 215
East Dundee, IL 60118

Entergy — ENTERGY NUCLEAR NORTHEAST
ENN-DC-149

VENDOR DOCUMENT REVIEW STATUS

☒ IPEC ☐ JAF ☐ PNPS ☐ VY

Document No.: 040711-01 Rev. No.: 0
Document Title: IP3 CHECWORKS POWER UPRATE ANALYSIS
ER No.: Purchase Order No.:

STATUS NO:

1 ☒ ACCEPTED
2 ☐ ACCEPTED AS NOTED RESUBMITTAL NOT REQUIRED
3 ☐ ACCEPTED AS NOTED RESUBMITTAL REQUIRED
4 ☐ NOT ACCEPTED
5 ☐ FOR INFORMATION

Acceptance does not constitute approval of design details, calculations, analysis, test methods or materials developed or selected by the supplier and does not relieve supplier from full compliance with contractual negotiations.

Responsible Engineer: Harry G. Hartjen / Harry G Hartjen / 7/26/05
Print Name / Signature / Date

Table of Contents

1. INTRODUCTION 2

2. PURPOSE 3

3. SCOPE 4

4. ASSUMPTIONS AND MODELING DECISIONS 5

5. METHODOLOGY 7

5.1. INPUT SPU GLOBAL DATA 7
5.2. REDEFINITION OF CHECWORKS LINES 11
5.3. UPDATE MODEL BASED ON SPU OPERATIONAL OR CONFIGURATION CHANGES 12
5.4. UPDATE NETWORK FLOW ANALYSIS DEFINITIONS 12
5.5. IMPLEMENT THE ADVANCED RUN DEFINITION 13
5.6. PERFORM WEAR RATE ANALYSIS 15
5.7. QUANTIFY EFFECT OF STRETCH POWER UPRATE 15

6. RESULTS 16

6.1. COMPONENT LEVEL WEAR RATE CHANGES DUE TO SPU 16
6.2. STEAM CYCLE LEVEL WEAR RATE CHANGES DUE TO SPU 16

7. REFERENCES 17

APPENDIX A: CHECWORKS MODELED LINES 19
APPENDIX B: COMPONENT LEVEL WEAR RATE CHANGES DUE TO SPU 33
APPENDIX C: STEAM CYCLE LEVEL WEAR RATE CHANGES DUE TO SPU 35

ATTACHMENT A: REFERENCED CORRESPONDENCE AND COMMUNICATIONS 39

1. Introduction

This calculation documents the revision of the Indian Point Unit 3 CHECWORKS model to predict Flow-Accelerated Corrosion (FAC) wear rate changes due to Stretch Power Uprate (SPU). The Indian Point Unit 3 SPU will change feedwater and steam flow rates, temperatures, and enthalpies, which in turn change local chemistry values. All of these factors affect wear rates due to FAC. As a result of the uprate, some lines will experience accelerated rates of FAC, while others will have reduced rates. The impact on each line depends on the complex interaction of changes in flow rate, pressure, temperature, enthalpy, steam quality, and chemistry on the FAC degradation mechanism.

Indian Point 3 had previously developed a CHECWORKS model of FAC-susceptible piping. However, the previous model did not address the changes that will result from Appendix K Uprate and Stretch Power Uprate. This calculation details the process required to revise the CHECWORKS model so that it correctly reflects all plant power levels (the original power level, Appendix K Uprate, and Stretch Power Uprate). Also documented are the changes in FAC wear rates due to the SPU.

Note that historical (pre-uprate and Appendix K Uprate) operating conditions remain within the model, associated to the applicable operating cycles. The SPU operating conditions are associated to the calendar time that those conditions are scheduled to occur, starting in Cycle 14 [7.3.1]. In this way, the model's predictions of total current and future wear will be as accurate as possible because the predictions will be based on both historical and expected future operating conditions.

2. Purpose

The purposes of the power uprate analysis in CHECWORKS are as follows:

- To quantify changes in FAC wear rates due to the Stretch Power Uprate (both increases and decreases).
- To gain the ability to describe the effects of power uprate on FAC-susceptible piping in the Licensing Submittal.
- To ensure that the CHECWORKS model reflects current plant conditions going forward.

3. Scope

The scope of this power uprate analysis was the entire Indian Point 3 CHECWORKS model including all modeled lines and components [7.2]. No analysis was performed on plant lines and components that were not part of the CHECWORKS model

This analysis was performed using CHECWORKS FAC version 1.0G.

Assumptions and modeling decisions made during this analysis are documented in Section 4. The methodology employed during this analysis is detailed in Section 5. Results obtained are listed in Section 6 and in the Appendices. Finally, Section 7 includes a list of all references used in this analysis.

4. Assumptions and Modeling Decisions

The following assumptions and modeling decisions apply to the updated CHECWORKS model.

4.1. All data in the CHECWORKS model received as input (the as-received model) [7.2] was assumed to be complete and accurate.

4.2. An exception was made to Assumption 4.1 in one case. The CHECWORKS HBD in the input model had the Boiler Feed Pump modeled as an electric pump instead of a steam driven pump. The CHECWORKS HBD was corrected to portray the Boiler Feed Pump as a steam driven pump.

4.3. Because the Boiler Feed Pump was remodeled as a steam driven pump as discussed in Section 4.2, Steam Cycle Data was input for the original power level in addition to the Appendix K and SPU power levels for this location. Flow rate was obtained from the original HBD [7.1.1]. Feed Pump Turbine drain pressure and enthalpy was not shown on the original HBD; therefore, the original pressure and enthalpy was assumed to be equivalent to the SPU pressure and enthalpy as shown on the SPU HBD [7.1.3]. Note that this assumption has little impact on the model as no components in the Feed Pump Turbine drain are modeled.

4.4. For a number of lines on the SPU Heat Balance Diagram [7.1.3] and Appendix K Heat Balance Diagram [7.1.2], thermodynamic and flow values (pressure, enthalpy, and flow rate) were listed separately for the steam phase and the water phase or for each train in a parallel train configuration. The overall flow rate, pressure, and enthalpy of these lines were calculated and entered in the CHECWORKS Steam Cycle (see Section 5.1.3). The combined flow rate was calculated as the sum of the liquid and steam flow rates (or the sum of multiple trains), the combined pressure was calculated as the average of all pressures, and the enthalpy was calculated as the weighted average of liquid and steam enthalpy (or the weighted average of multiple trains). These calculations were performed based on EPRI's Guidelines for Plant Modeling and Evaluation of Component Inspection Data [7.6].

4.5. Plant period data was estimated for the cycle where the SPU will occur. Start and end dates were estimated based on anticipated dates [7.3.1]. An estimation of operating hours was calculated from these dates based on calendar days. The Water Treatment for this cycle was modeled as equivalent to the most recent complete operating cycle. The model can be updated with actual values for these inputs when this data becomes available.

4.6. Due to the use of the Advanced Run Definition feature in this model, which is required for accurate modeling of the power uprate condition, CHECWORKS

FAC Version 1.0G cannot accurately represent the operating conditions in tees that combine or split flow. In order to maintain simplicity in the CHECWORKS model, tees were modeled with a flow rate equal to the highest flow rate present in the tee. Therefore, the predicted wear rates for tees should be used with caution.

4.7. The flow rate in the Feedwater Pump Recirculation lines was shown as zero on the SPU Heat Balance [7.1.3] and Appendix K Heat Balance [7.1.2]. In general flow through such lines is zero under normal operation, so a heat balance is not a good source for determining this flow. Therefore, an assumption was made that the flow rate under SPU and Appendix K conditions was equivalent to the flow rate under original pre-uprate conditions as defined in the input CHECWORKS model (the as-received model) [7.2]. Note that all components in these lines are constructed with FAC-resistant material, so this assumption has little to no impact on wear rate predictions.

5. Methodology

Additional input data was entered into the CHECWORKS model to model the power uprate. A number of tasks were required to convert the previous Indian Point Unit 3 model into a format that was compatible with a power uprate. The following section describes the tasks performed to enter power uprate data and to convert the model into a form compatible with multiple power levels.

5.1. Input SPU Global Data

Additional CHECWORKS Power Levels representing the SPU and Appendix K operating conditions were defined in the model and associated to the applicable Plant Period. The following sections detail the steps involved in this task.

5.1.1. CHECWORKS Heat Balance Diagram

The CHECWORKS Heat Balance Diagram (HBD) was reviewed to ensure that it correctly portrayed plant configuration. The CHECWORKS HBD was compared to the plant Heat Balance Diagrams [7.1] and flow diagrams [7.3.3]. A discrepancy was noted and corrected as discussed in Section 4.2

5.1.2. Power Level Data

A Plant Power Level is defined for each power level at which the plant is operated for a significant period of time. Two new power levels were added to the model representing the SPU and Appendix K conditions. Table 5.1 lists all power levels in the model and the operating cycles to which they apply.

Table 5.1 Power Level History

Power Level (%)	Power (MWt)	Operating Cycles	Notes
100.00	3045.3	Cycles 1-12A	Original Power Level
101.12	3079.4	Cycles 12B-13	Appendix K Uprate
104.95	3196.0	Cycle 14 to End of Life	Stretch Power Uprate (SPU)

Data was entered for the new power levels on the Power Level Form in accordance with the CHECWORKS User's Guide [7.5].

Table 5.2 summarizes Appendix K power level input data and the source of this data.

Table 5.2 Appendix K Power Level Input Data

CHECWORKS Field	Power Level 101.12%	Reference
Steam Rate (Mlb/hr)	13.186870	7.1.2
Pressure (psia)	774.4	7.1.2
Temp (F)	514.5	7.1.2
Blowdown Rate (Mlb/hr)	0.057785	7.1.2
Carryover (%)	0.08	7.1.2
Feedwater Vent Rate (%)	x	7.5
Reheater Vent Rate (%)	x	7.5
Moisture Separator Carryunder (%)	x	7.5
Notes: Appendix K Uprate. 3079.4 MWt		

x - Field should be left blank for a PWR.

Table 5.3 summarizes SPU power level input data and the source of this data.

Table 5.3 SPU Power Level Input Data

CHECWORKS Field	Power Level 104.95%	Reference
Steam Rate (Mlb/hr)	13.783800	7.1.3
Pressure (psia)	760.4	7.1.3
Temp (F)	512.4	7.1.3
Blowdown Rate (Mlb/hr)	0.057785	7.1.3
Carryover (%)	0.08	7.1.3
Feedwater Vent Rate (%)	x	7.5
Reheater Vent Rate (%)	x	7.5
Moisture Separator Carryunder (%)	x	7.5
Notes: Stretch Power Uprate. 3196 MWt		

x - Field should be left blank for a PWR.

5.1.3. Steam Cycle Data

Steam Cycle Data is used by CHECWORKS to calculate chemistry conditions during wear rate analysis. It is also used to calculate operating conditions when the Advanced Run Definition feature is implemented (see Section 5.5). Steam cycle data was entered for each heat balance item for the SPU power level and the Appendix K power level. All data was entered in accordance with EPRI's "Guidelines for Plant Modeling and Evaluation of Component Inspection Data" [7.6] and the CHECWORKS

User's Guide [7.5]. Table 5.4 summarizes Appendix K steam cycle input data and the source of this data.

Table 5.4 Appendix K Steam Cycle Input Data

HBD Item[1]	Location	Flow Rate (Mlb/hr)	Enthalpy (Btu/lbm)	Pressure (psia)	Temp (F)	Reference
FWHTR 1	Tube side outlet	x	x	x	425.0	7.1.2
FWHTR 2	Tube side outlet	x	x	x	374.7	7.1.2
FWHTR 3	Tube side outlet	x	x	x	296.6	7.1.2
FWHTR 4	Tube side outlet	x	x	x	243.0	7.1.2
FWHTR 5	Tube side outlet	x	x	x	196.4	7.1.2
FWHTR 6	Tube side outlet	x	x	x	155.3	7.1.2
SPUMP 1	Driven steam and drain enthalpy and pressure	0.147147	976.3	1.0	x	7.1.2
MSEP 1	Moist Sep & Moist PreSep Drains[2]	0.922509	355.9	199.8	x	7.1.2
TANK 1	Heater Drain Tank exiting steam	0	338.7	197.7	x	Note 4
TANK 2	Blowdown tank exiting steam	0	502.9	761.2	x	Note 4
RHTR 1	Reheater Drain	0.954357	506.5	623.3	x	7.1.2
HPEXTLINE 1	Conditions in line (Presep Outlet to FWH 5)[3]	0.935949	1148.2	200.9	x	7.1.2
HPEXTLINE 2	Conditions in line to FWH 6	0.751563	1138.6	361.4	x	7.1.2
LPEXTLINE 1	Conditions in line to FWH 4	0.531280	1197.4	74.54	x	7.1.2
LPEXTLINE 2	Conditions in line to FWH 3	0.447417	1075.7	31.29	x	Note 5
LPEXTLINE 3	Conditions in line to FWH 2	0.458881	906.1	12.80	x	Note 5
LPEXTLINE 4	Conditions in line to FWH 1	0.771656	907.0	5.55	x	Note 5

x = No value entered (not required by CHECWORKS).

(1) The HBD Item name is automatically generated by CHECWORKS. Feedwater heaters are numbered sequentially in reverse flow order. Feedwater Heater 1 is the feedwater heater closest to the steam generator (equivalent to heater 36 at Indian Point 3). Extraction lines are numbered sequentially in order of decreasing pressure.

(2) MSEP 1 represents the conditions in both the moisture separator and moisture pre-separator drain lines as recommended by EPRI Guidelines [7.6].

(3) HPEXTLINE 1 is a fictitious high-pressure extraction line representing the steam lines between the pre-separator and main separator as recommended by EPRI Guidelines [7.6].

(4) Flow rate is for exiting steam flow and was entered as zero as recommended by EPRI Guidelines [7.6]. Pressure and enthalpy were obtained from the Appendix K PEPSE model [7.1.2].

(5) Enthalpy was calculated as the weighted average of the steam and liquid phases. Steam phase enthalpy was obtained directly from the PEPSE diagram as the enthalpy after moisture removal in the LP Turbine. Liquid phase enthalpy was calculated as the enthalpy of saturated liquid at the pressure given on the PEPSE diagram [7.1.2].

Table 5.5 summarizes SPU steam cycle input data and the source of this data.

Table 5.5 SPU Steam Cycle Input Data

HBD Item[1]	Location	Flow Rate (Mlb/hr)	Enthalpy (Btu/lbm)	Pressure (psia)	Temp (F)	Reference
FWHTR 1	Tube side outlet	x	x	x	430.4	7.1.3
FWHTR 2	Tube side outlet	x	x	x	377.3	7.1.3
FWHTR 3	Tube side outlet	x	x	x	298.3	7.1.3
FWHTR 4	Tube side outlet	x	x	x	245.2	7.1.3
FWHTR 5	Tube side outlet	x	x	x	198.0	7.1.3
FWHTR 6	Tube side outlet	x	x	x	156.9	7.1.3
SPUMP 1	Driven steam and drain enthalpy and pressure	0.160926	974.8	1.0	x	7.1.3
MSEP 1	Moist Sep & Moist PreSep Drains[2]	1.097732	358.7	207.2	x	7.1.3
TANK 1	Heater Drain Tank exiting steam	0	342.5	203.3	x	Note 4
TANK 2	Blowdown tank exiting steam	0	502.8	760.4	x	Note 4
RHTR 1	Reheater Drain	0.870169	504.5	620.3	x	7.1.3
HPEXTLINE 1	Conditions in line (Presep Outlet to FWH 5)[3]	0.984482	1147.3	208.3	x	7.1.3
HPEXTLINE 2	Conditions in line to FWH 6	0.852604	1155.1	388.6	x	7.1.3
LPEXTLINE 1	Conditions in line to FWH 4	0.548842	1197.6	77.28	x	7.1.3
LPEXTLINE 2	Conditions in line to FWH 3	0.472533	1076.5	32.42	x	Note 5
LPEXTLINE 3	Conditions in line to FWH 2	0.475753	905.9	13.27	x	Note 5
LPEXTLINE 4	Conditions in line to FWH 1	0.790585	905.2	5.76	x	Note 5

x = No value entered (not required by CHECWORKS).

(1) The HBD Item name is automatically generated by CHECWORKS. Feedwater heaters are numbered sequentially in reverse flow order. Feedwater Heater 1 is the feedwater heater closest to the steam generator (equivalent to heater 36 at Indian Point 3). Extraction lines are numbered sequentially in order of decreasing pressure.

(2) MSEP 1 represents the conditions in both the moisture separator and moisture pre-separator drain lines as recommended by EPRI Guidelines [7.6].

(3) HPEXTLINE 1 is a fictitious high-pressure extraction line representing the steam lines between the pre-separator and main separator as recommended by EPRI Guidelines [7.6].

(4) Flow rate is for exiting steam flow and was entered as zero as recommended by EPRI Guidelines [7.6]. Pressure and enthalpy were obtained from the SPU PEPSE model [7.1.3].

(5) Enthalpy was calculated as the weighted average of the steam and liquid phases. Steam phase enthalpy was obtained directly from the PEPSE diagram as the enthalpy after moisture removal in the LP Turbine. Liquid phase enthalpy was calculated as the enthalpy of saturated liquid at the pressure given on the PEPSE diagram [7.1.3].

5.1.4. Plant Period Data

Each power level identified in Table 5.1 was associated to the correct operating cycle or cycles. The Appendix K Uprate start date was obtained through correspondence with plant personnel [7.3.3]. The SPU is scheduled for the start of Cycle 14. To include this power level in the

model, plant periods were created that have not yet occurred. Start dates, end dates, operating hours, and chemistry data was estimated for these periods (see Section 4.5).

5.2. Redefinition of CHECWORKS Lines

The CHECWORKS model was prepared for use of the Advanced Run Definition (see Section 5.5). This task consisted of redefining the CHECWORKS lines within the model so that all components on a given line are subject to the same thermodynamic conditions. Appendix A contains a listing of all lines that appear in the CHECWORKS model.

For conservatism, the tee where flow rate changed was associated to the line having the greatest flow rate. Note that the model will over-predict the wear for some sections of tees (see Section 4.6).

Figure 5-1 illustrates the procedure used to group components into lines. In the diagram, seven lines exist, each with a different percentage of the total flow. Note that the tee is grouped with the line number seeing the greatest percentage of flow.

Figure 5-1 Diagram of Line Redefinition Procedure

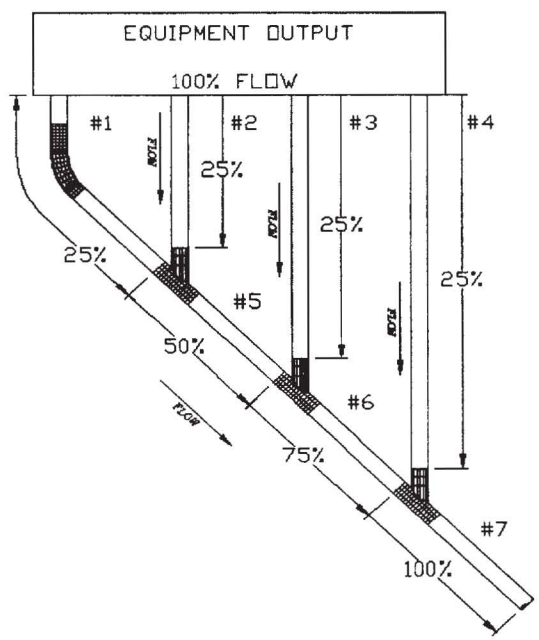

Components were grouped into lines by comparing the input CHECWORKS model [7.2] with FAC isometrics [7.7] and flow diagrams [7.3.3]. New lines were given names according to the naming convention, below.

AA-BB.CC D

AA	=	System Abbreviation
BB.CC	=	Multi-digit code to identify a plant line or location
D	=	Brief line description

Note that the AA-BB.CC portion of the line name corresponds to the plant line name and component name prefix as taken from the flow diagrams [7.3.3] and FAC isometrics [7.7]. New line names were created as required by CHECWORKS, not where plant line names changed. Therefore, some lines contain components with different component name prefixes, but in general the component prefix and line name agree. Note that if the AA-BB.CC portion of the line name was not unique for CHECWORKS purposes, an underscore followed by a 1, 2, 3 etc. was added to this portion of the line name.

For example, line name "CD-01.1A FWH 31A to FWH 32A" is plant line name CD-01.1A in the Unit 3 Condensate system from Feedwater Heater 31A to Feedwater Heater 32A.

5.3. Update Model Based on SPU Operational or Configuration Changes

With an uprate in power, lines with partial operation may increase or decrease their operation frequency (such as additional trains in operation or bypass lines now operated during full power). Additionally, uprates may call for design changes that may result in piping configuration changes.

No operational or configuration changes occurred due to the SPU [7.3.2].

5.4. Update Network Flow Analysis Definitions

Network Flow Analysis (NFA) is a module within CHECWORKS that calculates flow rate, pressure drops, temperature changes, and steam quality changes based on piping configuration and source/sink conditions. NFA is used where operating conditions are not completely known. A different set of source/sink conditions is entered for each NFA per power level. Additional input data must be added to each NFA to reflect the SPU and Appendix K power levels identified in Section 5.1.2.

The Indian Point 3 CHECWORKS model did not contain any NFA definitions; therefore, no updates to the model were performed during this task [7.2].

5.5. Implement the Advanced Run Definition

This task involved a redefinition of the source in which CHECWORKS obtains thermodynamic conditions (pressure, enthalpy, temperature, and quality) and flow rate conditions for a component. Previously all thermodynamic and flow rate conditions had been entered individually for each component on the component data forms. However, the component form allows only one set of thermodynamic and flow rate conditions to be entered (i.e. from one power level). Therefore, use of the component form as the input for thermodynamic and flow rate conditions is not valid, as it does not reflect both pre-uprate and post-uprate conditions.

Instead, thermodynamic and flow conditions were entered globally (see Section 5.1) and linked to components through the association of a line to the CHECWORKS HBD (except Z-type lines). The following sections detail the steps performed to implement the Advanced Run Definition.

5.5.1. Enter Flow Factors

On the CHECWORKS HBD level, flow rates are expressed in totals rather than for each train. For example, feedwater flow rate might be entered as 10 million pounds per hour, where each train of a three-train system sees 3.33 million pounds per hour. As a result, flow multipliers had to be entered for the lines so that the actual flow rate is used to calculate wear rate at the component level. Thus for each line a flow multiplier, or flow factor, was calculated. The flow factor is used to adjust the CHECWORKS HBD calculated flow rate. The calculated flow factor for each line was entered on the ARD form.

There are some exceptions to the use of flow factors. The first is for lines and flow segments where NFA would be used to calculate operating conditions and flow rate. For these the train flow is directly entered into the NFA definitions. Therefore, these lines the assigned flow factor is 1.0. Other exceptions are made for some lines and flow segments where the ARD form is used as the source of operating conditions. In some cases, if the input source (PEPSE or HBD) already listed flow rate per train, then the flow factor is set to 1.0 and the train flow rate is entered.

Flow factors were calculated by consulting the CHECWORKS HBD, the plant heat balance diagrams [7.1], and the flow diagrams [7.3.3]. Flow factors for each line appear in Appendix A.

5.5.2. Enter Duty Factors

The duty factor is used to specify the fraction of the total plant operating hours that a given line was in operation. For full-time lines, the duty factor is 1.0. For part-time lines, the duty factor is set to a value less than one based on operation. For example, if a line has full flow half of the time and zero flow half of the time, then the lines would be modeled with full flow and the duty factor would be set to 0.5. Use of the duty factor is

in accordance with the recommendations of the EPRI Guidelines for Plant Modeling and Evaluation of Component Inspection Data [7.6].

Duty factors were taken from the input CHECWORKS model [7.2]. Duty factors for each line appear in Appendix A.

5.5.3. Complete Advanced Run Definition Form for Z-Type Lines

Lines not associated to the CHECWORKS HBD are called Z-type lines. Because they are not associated to the HBD, CHECWORKS cannot automatically calculate chemistry and operating conditions for these lines. Therefore, when using the ARD function, the user must input not only flow factors and duty factors but also thermodynamic conditions, flow rate, and chemistry conditions for each operating cycle.

Z-type lines were created due to limitations in the CHECWORKS HBD. In these cases, the computer model does not obtain the data from the correct location on the HBD, or the CHECWORKS program did not allow the correct data to be entered. For example, there is no global input into CHECWORKS to specify the pressure, temperature, enthalpy, or quality in feedwater heater drain lines. Instead the model calculates the conditions in the shell side drain as being equivalent to tube side heater outlet. This is incorrect, so the CHECWORKS HBD was not used as the source of operating conditions for heater drain lines. Instead, operating conditions for heater drain lines were entered on the ARD form.

Appendix A lists all the lines in the model and includes whether or not the line is a Z-type line.

For Z-type lines, thermodynamic data and flow rate was obtained from the Heat Balance Diagrams [7.1].

5.5.4. Set Wear Rate Analysis Source of Data Option

The CHECWORKS model allows the user to specify the source of component operating conditions. Component operating conditions can come from one of four locations: the CHECWORKS HBD, the Component form, an NFA, or the ARD. During wear rate analysis, CHECWORKS can use the operating conditions stored at the component level ("COMP"), determine the operating conditions based upon steam cycle data and Advanced Run Definition Flow Factors ("HBD"), use the operating conditions entered on the Advanced Run Definition form only ("ARD"), or to use the operating conditions calculated using an NFA ("NFA"). For all cases, the option "NFA->HBD->ARD->COMP" was selected. This directs CHECWORKS to preferentially use Network Flow Analysis first (if it exists for the line), followed by the ARD (for Z-type lines), the HBD (for all remaining lines), and finally the component.

The option "NFA->HBD->ARD->COMP" was selected for all lines since the model includes multiple power levels.

5.6. Perform Wear Rate Analysis

Wear Rate Analysis (WRA) is a module within CHECWORKS that provides predicted wear rates and remaining service lives for each modeled component. WRA was run on every component so that the predicted wear rates include the SPU conditions. WRA includes an error-trapping routine, so that discrepancies will be identified and corrected. WRA was performed successfully without error.

5.7. Quantify Effect of Stretch Power Uprate

An analysis was performed to calculate the change in CHECWORKS predicted wear rates due to the SPU conditions. Wear Rate Analysis was performed for two periods representing the original power level and the SPU power level. The water treatment for these two periods was modeled as identical, so wear rate changes are due to SPU conditions only. In both cases, Wear Rate Analysis was performed using Pass 2 methods, where predictions are calibrated to inspection history.

The analysis obtained both actual results and percentage differences for representative components and lines so that detailed comparisons could be made. The analysis was limited to non-Chromium containing components only, so average values would not be skewed by these components. In addition the changes due to SPU for some of the dominant parameters affecting FAC wear rates (temperature, steam quality, and flow rate) were determined.

6. Results

6.1. Component Level Wear Rate Changes due to SPU

An analysis was performed on a sample of some of the components in the model most susceptible to FAC. Pass 2 Wear Rate Analysis was performed at the pre-uprate, original power level and the SPU power level. The samples were determined as follows:

- The five components in the model with the highest wear rates for the original, pre-uprate power level were selected.
- The five components that experienced the greatest percent increase in wear rate due to the SPU (excluding chromium containing components).

The results of this analysis appear in Appendix B

6.2. Steam Cycle Level Wear Rate Changes due to SPU

An analysis was performed comparing Steam Cycle Level changes in wear rate predictions due to the SPU. Lines with similar thermodynamic conditions were grouped together and the average component wear rate was calculated for each grouping, called a Steam Cycle Location. In addition some of the dominant parameters affecting FAC wear rates (temperature, steam quality, and flow rate) were determined. The results of this analysis appear in tabular form in Appendix C. In addition, results are summarized on a steam cycle drawing in Appendix C.

7. References

7.1. Indian Point 3 Heat Balance Diagrams

7.1.1. Original HBD, 3045.3 MWt: New York Power Authority Indian Point 3 Nuclear Power Plant Heat Balance "F", 5/29/90.

7.1.2. Appendix K HBD, 3079.4 MWt: Indian Point 3 Nuclear Power Plant "Benchmark tuned to 3-19-03 Plant Data", Sheets 1-6, Run date 1/10/2005.

7.1.3. Stretch Power Uprate HBD, 3196 MWt: Indian Point 3 Nuclear Power Plant "Uprate 3168 Core Power w/ 0.5% Margin", Sheets 1-6, S&W Calc 59379-HU(S)-001 Rev. 0, Attachment 8.15.

7.2. Indian Point 3 CHECWORKS FAC model, input model (as-received), electronic files provided to CSI on 10/5/2004.

7.3. Referenced Correspondence and Communications (see Attachment A)

7.3.1. Email from Harry Hartjen (IP3) to Daniel R. Poe (CSI Technologies), dated 10/12/2004, regarding SPU implementation dates, CSI Doc. No. 04071111.

7.3.2. Email from Harry Hartjen (IP3) to Daniel R. Poe (CSI Technologies), dated 10/18/2004, regarding operational and configuration changes due to SPU, CSI Doc. No. 04071113.

7.3.3. Email from Ron Macina (IP3) to Brian Trudeau (CSI Technologies), dated 1/10/2005, regarding addition al Heat Balance Diagrams and uprate start dates, CSI Doc. No 04071140.

7.4. Indian Point 3 Erosion Corrosion Inspection Flow Diagrams

Condensate & Boiler Feed Pump Suction, Dwg No. EC-F-20183 Sh. 1, Rev. 1
Condensate & Boiler Feed Pump Suction, Dwg No. EC-F-20183 Sh. 2, Rev. 2
Boiler Feedwater, Dwg No. EC-F-20193, Rev. 2
Extraction Steam, Dwg No. EC-F-20203 Sh. 1, Rev. 1
Extraction Steam, Dwg No. EC-F-20203 Sh. 2, Rev. 1
Heater Drains & Vents, Dwg No. EC-F-20223 Sh. 1, Rev. 1
Heater Drains & Vents, Dwg No. EC-F-20223 Sh. 2, Rev. 1
Moisture Separator and Reheater Drains & Vents, Dwg No. EC-F-20233 Sh. 1, Rev. 1
Moisture Separator and Reheater Drains & Vents, Dwg No. EC-F-20233 Sh. 2, Rev. 1

7.5. "CHECWORKS Flow-Accelerated Corrosion Application, Version 1.0G User Guide," Document TR-103198-P1-R1, October 2000.

7.6. "CHECWORKS Steam/Feedwater Application, Guidelines for Plant Modeling and Evaluation of Component Inspection Data", Doc. No. 1009599, Final Report, September 2004.

7.7. Indian Point 3 FAC Isometrics and Plan/Section Drawings

Dwg No. EC-H-5000, Rev. 3
Dwg No. EC-H-5001, Rev. 4
Dwg No. EC-H-5002, Rev. 1
Dwg No. EC-H-5004, Rev. 2
Dwg No. EC-H-5005, Rev. 2
Dwg No. EC-H-5006, Rev. 1
Dwg No. EC-H-5007, Rev. 2
Dwg No. EC-H-5008, Rev. 2
Dwg No. EC-H-50061, Rev. 1
Dwg No. EC-H-50062, Rev. 1
Dwg No. EC-H-50064, Rev. 1
Dwg No. EC-H-50071, Rev. 2
Dwg No. EC-H-50081, Rev. 2
Dwg No. EC-H-50082, Rev. 3
Dwg No. EC-H-50082, Rev. 3
Dwg No. EC-H-50009, Rev. 1
Dwg No. EC-H-50010, Rev. 2
Dwg No. EC-H-50011, Rev. 1
Dwg No. EC-H-50012, Rev. 2
Dwg No. EC-H-50014, Rev. 1
Dwg No. EC-H-50015, Rev. 2
Dwg No. EC-H-50016, Rev. 2
Dwg No. EC-H-50017, Rev. 2
Dwg No. EC-H-50018, Rev. 2
Dwg No. EC-H-50020, Rev. 2
Dwg No. EC-H-50021, Rev. 2
Dwg No. EC-H-50022, Rev. 2
Dwg No. EC-H-50029, Rev. 1
Dwg No. EC-H-50030, Rev. 1
Dwg No. EC-H-50031, Rev. 2
Dwg No. EC-H-50035, Rev. 2
Dwg No. EC-H-50038, Rev. 2
Dwg No. EC-H-50039, Rev. 3
Dwg No. EC-H-50040, Rev. 3
Dwg No. EC-H-50041, Rev. 3
Dwg No. EC-H-50042, Rev. 2
Dwg No. EC-H-50045, Rev. 1
Dwg No. EC-H-50046, Rev. 2
Dwg No. EC-H-50047, Rev. 2
Dwg No. EC-H-50048, Rev. 2
Dwg No. EC-H-50060, Rev. 1
Dwg No. EC-H-50072, Rev. 1
Dwg No. EC-H-50074, Rev. 1
Dwg No. EC-H-50075, Rev. 1
Dwg No. EC-H-50076, Rev. 1
Dwg No. EC-H-50077, Rev. 1
Dwg No. EC-F-50078, Rev. 1
Dwg No. EC-H-50079, Rev. 2
Dwg No. EC-H-50080, Rev. 2
Dwg No. EC-H-50084, Rev. 3
Dwg No. EC-H-50085, Rev. 1
Dwg No. EC-H-50086, Rev. 1
Dwg No. EC-H-50087, Rev. 1
Dwg No. EC-H-50088, Rev. 1
Dwg No. A-201862
Dwg No. A-201881
Dwg No. A-202112
Dwg No. A-202110
Dwg No. A-202113
Dwg No. A-202111
Dwg No. A-201869

Appendix A

CHECWORKS Modeled Lines

CHECWORKS Line Name	Line Description	Flow Diagram No.	Op Cond Source
CD-01.1A FWH 31A to FWH 32A	Cond: FW Heater 31A to FW Heater 32A	EC-F-20183 SH. 1	HBD
CD-01.1B FWH 31B to FWH 32B	Cond: FW Heater 31B to FW Heater 32B	EC-F-20183 SH. 1	HBD
CD-01.1C FWH 31C to FWH 32C	Cond: FW Heater 31C to FW Heater 32C	EC-F-20183 SH. 1	HBD
CD-02.11 SGBD HX3 to FWH HDR	Cond: FW Heaters 32 Outlet Header to SG Blowdown HX 3	EC-F-20183 SH. 2	HBD
CD-02.1A FWH 32A to HDR	Cond: FW Heater 32A to Header	EC-F-20183 SH. 1	HBD
CD-02.1B FWH 32B to HDR	Cond: FW Heater 32B to Header	EC-F-20183 SH. 1	HBD
CD-02.1C FWH 32C to HDR	Cond: FW Heater 32C to Header	EC-F-20183 SH. 1	HBD
CD-02.2 FWH 32 OUT HDR	Cond: FW Heaters 32 Outlet Header Between 32B Connection and 32C Connection	EC-F-20183 SH. 1	HBD
CD-02.3 FWH 32 OUT HDR	Cond: FW Heaters 32 Outlet Header Between 32C Connection and Takeoff to SG Blowdown HX 3	EC-F-20183 SH. 1	HBD
CD-02.4 FWH 32 OUT HDR	Cond: FW Heaters 32 Outlet Header Between Takeoff to SG Blowdown HX 3 and Return from SG Blowdown HX 3	EC-F-20183 SH. 2	HBD
CD-02.5 FWH 32 OUT HDR	Cond: FW Heaters 32 Outlet Header Between Return from SG Blowdown HX 3 and 33C Takeoff	EC-F-20183 SH. 2	HBD
CD-02.6 FWH 32 OUT HDR	Cond: FW Heaters 32 Outlet Header Between 33C Takeoff and 33B Takeoff	EC-F-20183 SH. 2	HBD
CD-02.8A HDR to FWH 33A	Cond: FW Heaters 32 Outlet Header to FW Heater 33A	EC-F-20183 SH. 2	HBD
CD-02.8B HDR to FWH 33B	Cond: FW Heaters 32 Outlet Header to FW Heater 33B	EC-F-20183 SH. 2	HBD
CD-02.8C HDR to FWH 33C	Cond: FW Heaters 32 Outlet Header to FW Heater 33C	EC-F-20183 SH. 2	HBD
CD-02.9 FWH HDR to SGBD HX3	Cond: SG Blowdown HX 3 to FW Heaters 32 Outlet Header	EC-F-20183 SH. 2	HBD

CHECWORKS Line Name	Line Description	Flow Diagram No.	Op Cond Source
CD-03.1A FWH 33A to FWH 34A	Cond: FW Heater 33A to FW Heater 34A	EC-F-20183 SH. 2	HBD
CD-03.1B FWH 33B to FWH 34B	Cond: FW Heater 33B to FW Heater 34B	EC-F-20183 SH. 2	HBD
CD-03.1C FWH 33C to FWH 34C	Cond: FW Heater 33C to FW Heater 34C	EC-F-20183 SH. 2	HBD
CD-04.1A FWH 34A to FWH 35A	Cond: FW Heater 34A to FW Heater 35A	EC-F-20183 SH. 2	HBD
CD-04.1B FWH 34B to FWH 35B	Cond: FW Heater 34B to FW Heater 35B	EC-F-20183 SH. 2	HBD
CD-04.1C FWH 34C to FWH 35C	Cond: FW Heater 34C to FW Heater 35C	EC-F-20183 SH. 2	HBD
CD-05.1A FWH 35A to HDR	Cond: FW Heater 35A to Header	EC-F-20183 SH. 2	HBD
CD-05.1B FWH 35B to HDR	Cond: FW Heater 35B to Header	EC-F-20183 SH. 2	HBD
CD-05.1C FWH 35C to HDR	Cond: FW Heater 35C to Header	EC-F-20183 SH. 2	HBD
CD-05.3 FWH 35 OUT HDR	Cond: FW Heaters 35 Outlet Header Between 35B Connection and 35C Connection	EC-F-20183 SH. 2	HBD
CD-05.4 FWH 35 OUT HDR	Cond: FW Heaters 35 Outlet Header Between 35C Connection and Heater Drain Pump Discharge Connection	EC-F-20183 SH. 2	HBD
CD-06.1 FWH 35 OUT HDR	Cond: FW Heaters 35 Outlet Header Between Heater Drain Pump Discharge Connection and Boiler Feed Pump Inlet Tee	EC-F-20183 SH. 2	Z-type
CD-06.2A HDR to BFP 31	Cond: FW Heaters 35 Outlet Header to Boiler Feed Pump 31	EC-F-20183 SH. 2	Z-type
CD-06.2B HDR to BFP 32	Cond: FW Heaters 35 Outlet Header to Boiler Feed Pump 32	EC-F-20183 SH. 2	Z-type
EX-01.1 HP EXT to FWH 36 HDR	Ext Steam: HP Extraction from HP Turbine to FW Heater 36 Inlet Header (Line 1 of 2)	EC-F-20203 Sh. 1	HBD

CHECWORKS Line Name	Line Description	Flow Diagram No.	Op Cond Source
EX-01.2 HP EXT to FWH 36 HDR	Ext Steam: HP Extraction from HP Turbine to FW Heater 36 Inlet Header (Line 2 of 2)	EC-F-20203 Sh. 1	HBD
EX-01.3 HP EXT FWH 36 HEADER	Ext Steam: HP Extraction Header Between HP Turbine Outlet Tee and FW Heater 36C Takeoff	EC-F-20203 Sh. 1	HBD
EX-01.4 HP EXT FWH 36 HEADER	Ext Steam: HP Extraction Header Between FW Heater 36C Takeoff and FW Heater 36B Takeoff	EC-F-20203 Sh. 1	HBD
EX-01.5A HP EX HDR to FWH 36A	Ext Steam: HP Extraction Header to FW Heater 36A	EC-F-20203 Sh. 1	HBD
EX-01.5B HP EX HDR to FWH 36B	Ext Steam: HP Extraction Header to FW Heater 36B	EC-F-20203 Sh. 1	HBD
EX-01.5C HP EX HDR to FWH 36C	Ext Steam: HP Extraction Header to FW Heater 36C	EC-F-20203 Sh. 1	HBD
EX-02.1 PSEP 2A 10" to 35 HDR	Ext Steam: Moist PreSeparator 2A to Feedwater Heater 35 Inlet Header (10-Inch OD Line)	EC-F-20203 Sh. 1	Z-type
EX-02.11 PSEP1B 14" to 35 HDR	Ext Steam: Moist PreSeparator 1B to Feedwater Heater 35 Inlet Header (14-Inch OD Line)	EC-F-20203 Sh. 1	Z-type
EX-02.12 PSEP 1B&2B to 35 HDR	Ext Steam: Moist PreSeparator 1B and 2B Outlet Tee to Feedwater Heater 35 Inlet Header (Upstream of 14" Connection)	EC-F-20203 Sh. 1	Z-type
EX-02.13 PSEP 1B&2B to 35 HDR	Ext Steam: Moist PreSeparator 1B and 2B Outlet Tee to Feedwater Heater 35 Inlet Header (Downstream of 14" Connection)	EC-F-20203 Sh. 1	Z-type
EX-02.14 FWH 35 HEADER	Ext Steam: FW Heater 35 Inlet Header Between Moist PreSeparator Outlets and FW Heater 35C Takeoff	EC-F-20203 Sh. 1	Z-type
EX-02.15 FWH 35 HEADER	Ext Steam: FW Heater 35 Inlet Header Between FW Heater 35C Takeoff and FW Heater 35B Takeoff	EC-F-20203 Sh. 1	Z-type
EX-02.16 HDR 35 to FWH 35A	Ext Steam: FW Heater 35 Inlet Header to Feedwater Heater 35A	EC-F-20203 Sh. 1	Z-type
EX-02.17 HDR 35 to FWH 35B	Ext Steam: FW Heater 35 Inlet Header to Feedwater Heater 35B	EC-F-20203 Sh. 1	Z-type
EX-02.18 HDR 35 to FWH 35C	Ext Steam: FW Heater 35 Inlet Header to Feedwater Heater 35C	EC-F-20203 Sh. 1	Z-type

CHECWORKS Line Name	Line Description	Flow Diagram No.	Op Cond Source
EX-02.2 PSEP 1A 10" to 35 HDR	Ext Steam: Moist PreSeparator 1A to Feedwater Heater 35 Inlet Header (10-Inch OD Line)	EC-F-20203 Sh. 1	Z-type
EX-02.4 PSEP2A 14" to 35 HDR	Ext Steam: Moist PreSeparator 2A to Feedwater Heater 35 Inlet Header (14-Inch OD Line)	EC-F-20203 Sh. 1	Z-type
EX-02.6 PSEP 1A&2A to 35 HDR	Ext Steam: Moist PreSeparator 1A and 2A Outlet Tee to Feedwater Heater 35 Inlet Header (Upstream of 14" Connection)	EC-F-20203 Sh. 1	Z-type
EX-02.7 PSEP 1A&2A to 35 HDR	Ext Steam: Moist PreSeparator 1A and 2A Outlet Tee to Feedwater Heater 35 Inlet Header (Downstream of 14" Connection)	EC-F-20203 Sh. 1	Z-type
EX-02.8 PSEP 2B 10" to 35 HDR	Ext Steam: Moist PreSeparator 2B to Feedwater Heater 35 Inlet Header (10-Inch OD Line)	EC-F-20203 Sh. 1	Z-type
EX-02.9 PSEP 1B 10" to 35 HDR	Ext Steam: Moist PreSeparator 1B to Feedwater Heater 35 Inlet Header (10-Inch OD Line)	EC-F-20203 Sh. 1	Z-type
EX-03.1A LP EXT 12 to FWH 34A	Ext Steam: LP Extraction No. 12 from LP Turbine 33 to FW Heater 34A	EC-F-20203 Sh. 2	HBD
EX-03.1B LP EXT 12 to FWH 34B	Ext Steam: LP Extraction No. 12 from LP Turbine 32 to FW Heater 34B	EC-F-20203 Sh. 2	HBD
EX-03.1C LP EXT 12 to FWH 34C	Ext Steam: LP Extraction No. 12 from LP Turbine 31 to FW Heater 34C	EC-F-20203 Sh. 2	HBD
EX-04.1 LPEX14 to FWH33A HDR	Ext Steam: LP Extraction No. 14 from LP Turbine 33 to Header Upstream of FW Heater 33A	EC-F-20203 Sh. 2	HBD
EX-04.11 LPEX FWH 33B IN HDR	Ext Steam: LP Extraction Header Upstream of FW Heater 33B	EC-F-20203 Sh. 2	HBD
EX-04.13 LP EXT 32 to FWH 33B	Ext Steam: LP Extraction Header to FW Heater 33B (Line 1 of 2)	EC-F-20203 Sh. 2	HBD
EX-04.14 LP EXT 32 to FWH 33B	Ext Steam: LP Extraction Header to FW Heater 33B (Line 2 of 2)	EC-F-20203 Sh. 2	HBD
EX-04.15 LPEX14 to FWH33C HDR	Ext Steam: LP Extraction No. 14 from LP Turbine 31 to Header Upstream of FW Heater 33C	EC-F-20203 Sh. 2	HBD
EX-04.16 LPEX13 to FWH33C HDR	Ext Steam: LP Extraction No. 13 from LP Turbine 31 to Header Upstream of FW Heater 33C	EC-F-20203 Sh. 2	HBD

CHECWORKS Line Name	Line Description	Flow Diagram No.	Op Cond Source
EX-04.18 LPEX FWH 33C IN HDR	Ext Steam: LP Extraction Header Upstream of FW Heater 33C	EC-F-20203 Sh. 2	HBD
EX-04.2 LPEX13 to FWH33A HDR	Ext Steam: LP Extraction No. 13 from LP Turbine 33 to Header Upstream of FW Heater 33A	EC-F-20203 Sh. 2	HBD
EX-04.21 LP EXT 31 to FWH 33C	Ext Steam: LP Extraction Header to FW Heater 33C (Line 1 of 2)	EC-F-20203 Sh. 2	HBD
EX-04.22 LP EXT 31 to FWH 33C	Ext Steam: LP Extraction Header to FW Heater 33C (Line 2 of 2)	EC-F-20203 Sh. 2	HBD
EX-04.4 LPEX FWH 33A IN HDR	Ext Steam: LP Extraction Header Upstream of FW Heater 33A	EC-F-20203 Sh. 2	HBD
EX-04.6 LP EXT to FWH 33A	Ext Steam: LP Extraction Header to FW Heater 33A (Line 1 of 2)	EC-F-20203 Sh. 2	HBD
EX-04.7 LP EXT to FWH 33A	Ext Steam: LP Extraction Header to FW Heater 33A (Line 2 of 2)	EC-F-20203 Sh. 2	HBD
EX-04.8 LPEX14 to FWH33B HDR	Ext Steam: LP Extraction No. 14 from LP Turbine 32 to Header Upstream of FW Heater 33B	EC-F-20203 Sh. 2	HBD
EX-04.9 LPEX13 to FWH33B HDR	Ext Steam: LP Extraction No. 13 from LP Turbine 32 to Header Upstream of FW Heater 33B	EC-F-20203 Sh. 2	HBD
EX-05.1A LP EXT 16 to FWH 32A	Ext Steam: LP Extraction No. 16 from LP Turbine 33 to FW Heater 32A	EC-F-20203 Sh. 2	HBD
EX-05.1B LP EXT 16 to FWH 32B	Ext Steam: LP Extraction No. 16 from LP Turbine 32 to FW Heater 32B	EC-F-20203 Sh. 2	HBD
EX-05.1C LP EXT 16 to FWH 32C	Ext Steam: LP Extraction No. 16 from LP Turbine 31 to FW Heater 32C	EC-F-20203 Sh. 2	HBD
EX-05.2A LP EXT 15 to FWH 32A	Ext Steam: LP Extraction No. 15 from LP Turbine 33 to FW Heater 32A	EC-F-20203 Sh. 2	HBD
EX-05.2B LP EXT 15 to FWH 32B	Ext Steam: LP Extraction No. 15 from LP Turbine 32 to FW Heater 32B	EC-F-20203 Sh. 2	HBD
EX-05.2C LP EXT 15 to FWH 32C	Ext Steam: LP Extraction No. 15 from LP Turbine 31 to FW Heater 32C	EC-F-20203 Sh. 2	HBD
EX-06.1A LP EXT 19 to FWH 31A	Ext Steam: LP Extraction No. 19 from LP Turbine 33 to FW Heater 31A	EC-F-20203 Sh. 2	HBD

CHECWORKS Line Name	Line Description	Flow Diagram No.	Op Cond Source
EX-06.1B LP EXT 19 to FWH 31B	Ext Steam: LP Extraction No. 19 from LP Turbine 32 to FW Heater 31B	EC-F-20203 Sh. 2	HBD
EX-06.1C LP EXT 19 to FWH 31C	Ext Steam: LP Extraction No. 19 from LP Turbine 31 to FW Heater 31C	EC-F-20203 Sh. 2	HBD
EX-06.2A LP EXT 17 to FWH 31A	Ext Steam: LP Extraction No. 17 from LP Turbine 33 to FW Heater 31A	EC-F-20203 Sh. 2	HBD
EX-06.2B LP EXT 17 to FWH 31B	Ext Steam: LP Extraction No. 17 from LP Turbine 32 to FW Heater 31B	EC-F-20203 Sh. 2	HBD
EX-06.2C LP EXT 17 to FWH 31C	Ext Steam: LP Extraction No. 17 from LP Turbine 31 to FW Heater 31C	EC-F-20203 Sh. 2	HBD
EX-06.3A LP EXT 20 to FWH 31A	Ext Steam: LP Extraction No. 20 from LP Turbine 33 to FW Heater 31A	EC-F-20203 Sh. 2	HBD
EX-06.3B LP EXT 20 to FWH 31B	Ext Steam: LP Extraction No. 20 from LP Turbine 32 to FW Heater 31B	EC-F-20203 Sh. 2	HBD
EX-06.3C LP EXT 20 to FWH 31C	Ext Steam: LP Extraction No. 20 from LP Turbine 31 to FW Heater 31C	EC-F-20203 Sh. 2	HBD
EX-06.4A LP EXT 18 to FWH 31A	Ext Steam: LP Extraction No. 18 from LP Turbine 33 to FW Heater 31A	EC-F-20203 Sh. 2	HBD
EX-06.4B LP EXT 18 to FWH 31B	Ext Steam: LP Extraction No. 18 from LP Turbine 32 to FW Heater 31B	EC-F-20203 Sh. 2	HBD
EX-06.4C LP EXT 18 to FWH 31C	Ext Steam: LP Extraction No. 18 from LP Turbine 31 to FW Heater 31C	EC-F-20203 Sh. 2	HBD
FW-01.1A BFP 31 to RCIRC T	Feed: Boiler Feed Pump 31 Discharge to Recirculation Takeoff	EC-F-20193	Z-type
FW-01.1B BFP 32 to RCIRC T	Feed: Boiler Feed Pump 32 Discharge to Recirculation Takeoff	EC-F-20193	Z-type
FW-01.2A BFP31 RCIRC T to HDR	Feed: Boiler Feed Pump 31 Discharge Between Recirculation Takeoff and Boiler Feed Pump Discharge Header	EC-F-20193	Z-type
FW-01.2B BFP32 RCIRC T to HDR	Feed: Boiler Feed Pump 32 Discharge Between Recirculation Takeoff and Boiler Feed Pump Discharge Header	EC-F-20193	Z-type

CHECWORKS Line Name	Line Description	Flow Diagram No.	Op Cond Source
FW-01.3 BFP DISCHARGE HDR	Feed: Boiler Feed Pump Discharge Header Between Pumps Outlet Tee and FW Heater 36C Takeoff	EC-F-20193	Z-type
FW-01.4 BFP DISCHARGE HDR	Feed: Boiler Feed Pump Discharge Header Between FW Heater 36C Takeoff and FW Heater 36B Takeoff	EC-F-20193	Z-type
FW-01.6A BFP HDR to FWH 36A	Feed: Boiler Feed Pump Discharge Header to Feedwater Heater 36A	EC-F-20193	Z-type
FW-01.6B BFP HDR to FWH 36B	Feed: Boiler Feed Pump Discharge Header to Feedwater Heater 36B	EC-F-20193	Z-type
FW-01.6C BFP HDR to FWH 36C	Feed: Boiler Feed Pump Discharge Header to Feedwater Heater 36C	EC-F-20193	Z-type
FW-02.1A FWH 36A to SG HDR	Feed: Feedwater Heater 36A to SG Inlet Header	EC-F-20193	HBD
FW-02.1B FWH 36B to SG HDR	Feed: Feedwater Heater 36B to SG Inlet Header	EC-F-20193	HBD
FW-02.1C FWH 36C to SG HDR	Feed: Feedwater Heater 36C to SG Inlet Header	EC-F-20193	HBD
FW-02.3 SG INLET HEADER	Feed: SG Inlet Header Between FW Heater 36B Connection and FW Heater 36C Connection	EC-F-20193	HBD
FW-02.4 SG INLET HEADER	Feed: SG Inlet Header Between FW Heater 36C Connection and SG 31 Takeoff	EC-F-20193	HBD
FW-02.5 SG INLET HEADER	Feed: SG Inlet Header Between SG 31 Takeoff and SG 32 Takeoff	EC-F-20193	HBD
FW-02.6 SG INLET HEADER	Feed: SG Inlet Header Between SG 32 Takeoff and SG 34 Takeoff	EC-F-20193	HBD
FW-02.8A SG HDR to SG 31	Feed: SG Inlet Header to SG 31	EC-F-20193	HBD
FW-02.8B SG HDR to SG 32	Feed: SG Inlet Header to SG 32	EC-F-20193	HBD
FW-02.8C SG HDR to SG 34	Feed: SG Inlet Header to SG 34	EC-F-20193	HBD
FW-02.8D SG HDR to SG 33	Feed: SG Inlet Header to SG 33	EC-F-20193	HBD
FW-04.1A BFP 31 RECIRC	Feed: Boiler Feed Pump 31 Recirculation From BFP 31 Discharge Line to Drain Collecting Tank 31	EC-F-20193	Z-type
FW-04.1B BFP 32 RECIRC	Feed: Boiler Feed Pump 32 Recirculation From BFP 32 Discharge Line to Drain Collecting Tank 31	EC-F-20193	Z-type
HD-01.1A FWH 36A to HD TK	Heater Dr: FW Heater 36A Drain to Heater Drain Tank	EC-F-20223 Sh. 1	Z-type

CHECWORKS Line Name	Line Description	Flow Diagram No.	Op Cond Source
HD-01.1B FWH 36B to HD TK	Heater Dr: FW Heater 36B Drain to Heater Drain Tank	EC-F-20223 Sh. 1	Z-type
HD-01.1C FWH 36C to HD TK	Heater Dr: FW Heater 36C Drain to Heater Drain Tank	EC-F-20223 Sh. 1	Z-type
HD-03.1A FWH 35A to HD TK	Heater Dr: FW Heater 35A Drain to Heater Drain Tank	EC-F-20223 Sh. 1	Z-type
HD-03.1B FWH 35B to HD TK	Heater Dr: FW Heater 35B Drain to Heater Drain Tank	EC-F-20223 Sh. 1	Z-type
HD-03.1C FWH 35C to HD TK	Heater Dr: FW Heater 35C Drain to Heater Drain Tank	EC-F-20223 Sh. 1	Z-type
HD-04.1A FWH 34A to FWH 33A	Heater Dr: FW Heater 34A Drain to FW Heater 33A	EC-F-20223 Sh. 2	Z-type
HD-04.1B FWH 34B to FWH 33B	Heater Dr: FW Heater 34B Drain to FW Heater 33B	EC-F-20223 Sh. 2	Z-type
HD-04.1C FWH 34C to FWH 33C	Heater Dr: FW Heater 34C Drain to FW Heater 33C	EC-F-20223 Sh. 2	Z-type
HD-06.1A FWH 33A to FWH 32A	Heater Dr: FW Heater 33A Drain to FW Heater 32A	EC-F-20223 Sh. 2	Z-type
HD-06.1B FWH 33B to FWH 32B	Heater Dr: FW Heater 33B Drain to FW Heater 32B	EC-F-20223 Sh. 2	Z-type
HD-06.1C FWH 33C to FWH 32C	Heater Dr: FW Heater 33C Drain to FW Heater 32C	EC-F-20223 Sh. 2	Z-type
HD-08.1A FWH 32A to FWH 31A	Heater Dr: FW Heater 32A Drain to Tee Upstream of FW Heater 31A	EC-F-20223 Sh. 2	Z-type
HD-08.1B FWH 32B to FWH 31B	Heater Dr: FW Heater 32B Drain to Tee Upstream of FW Heater 31B	EC-F-20223 Sh. 2	Z-type
HD-08.1C FWH 32C to FWH 31C	Heater Dr: FW Heater 32C Drain to Tee Upstream of FW Heater 31C	EC-F-20223 Sh. 2	Z-type
HD-09.3A FWH 32A to FWH 31A	Heater Dr: FW Heater 32A Drain from Tee Upstream of FW Heater 31A to FW Heater 31A (Line 1 of 2)	EC-F-20223 Sh. 2	Z-type
HD-09.3B FWH 32B to FWH 31B	Heater Dr: FW Heater 32B Drain from Tee Upstream of FW Heater 31B to FW Heater 31B (Line 1 of 2)	EC-F-20223 Sh. 2	Z-type

CHECWORKS Line Name	Line Description	Flow Diagram No.	Op Cond Source
HD-09.3C FWH 32C to FWH 31C	Heater Dr: FW Heater 32C Drain from Tee Upstream of FW Heater 31C to FW Heater 31C (Line 1 of 2)	EC-F-20223 Sh. 2	Z-type
HD-09.4A FWH 32A to FWH 31A	Heater Dr: FW Heater 32A Drain from Tee Upstream of FW Heater 31A to FW Heater 31A (Line 2 of 2)	EC-F-20223 Sh. 2	Z-type
HD-09.4B FWH 32B to FWH 31B	Heater Dr: FW Heater 32B Drain from Tee Upstream of FW Heater 31B to FW Heater 31B (Line 2 of 2)	EC-F-20223 Sh. 2	Z-type
HD-09.4C FWH 32C to FWH 31C	Heater Dr: FW Heater 32C Drain from Tee Upstream of FW Heater 31C to FW Heater 31C (Line 2 of 2)	EC-F-20223 Sh. 2	Z-type
HD-10.1A HD TK to HD PMP 31	Heater Dr: Heater Drain Tank to Heater Drain Pump 31	EC-F-20223 Sh. 1	HBD
HD-10.1B HD TK to HD PMP 32	Heater Dr: Heater Drain Tank to Heater Drain Pump 32	EC-F-20223 Sh. 1	HBD
HD-11.1A HD PMP 31 to HDR	Heater Dr: Heater Drain Pump 31 Discharge to Heater Drain Pump Discharge Header	EC-F-20223 Sh. 1	HBD
HD-11.1B HD PMP 32 to HDR	Heater Dr: Heater Drain Pump 32 Discharge to Heater Drain Pump Discharge Header	EC-F-20223 Sh. 1	HBD
HD-12.2A HD PMP HDR to CD SYS	Heater Dr: Heater Drain Pump Discharge Header to Connection with Condensate System at FW Heater 35 Outlet Header	EC-F-20223 Sh. 1	HBD
MSD-01.11A_1 MSEP 33A to HDR	Moist Sep Dr: Moist Separator 33A Drain to Header (Line 1 of 3)	EC-F-20233 Sh. 1	Z-type
MSD-01.11A_2 MSEP 33A to HDR	Moist Sep Dr: Moist Separator 33A Drain to Header (Line 2 of 3)	EC-F-20233 Sh. 1	Z-type
MSD-01.11A_3 MSEP 33A to HDR	Moist Sep Dr: Moist Separator 33A Drain to Header (Line 3 of 3)	EC-F-20233 Sh. 1	Z-type
MSD-01.11B_1 MSEP 33B to HDR	Moist Sep Dr: Moist Separator 33B Drain to Header (Line 1 of 3)	EC-F-20233 Sh. 2	Z-type
MSD-01.11B_2 MSEP 33B to HDR	Moist Sep Dr: Moist Separator 33B Drain to Header (Line 2 of 3)	EC-F-20233 Sh. 2	Z-type
MSD-01.11B_3 MSEP 33B to HDR	Moist Sep Dr: Moist Separator 33B Drain to Header (Line 3 of 3)	EC-F-20233 Sh. 2	Z-type

CHECWORKS Line Name	Line Description	Flow Diagram No.	Op Cond Source
MSD-01.12A MSEP 33A DR HDR	Moist Sep Dr: Moist Separator 33A Drain Header Upstream of Takeoff to Moist Separator Drain Tank	EC-F-20233 Sh. 1	Z-type
MSD-01.12B MSEP 33B DR HDR	Moist Sep Dr: Moist Separator 33B Drain Header Upstream of Takeoff to Moist Separator Drain Tank	EC-F-20233 Sh. 2	Z-type
MSD-01.13A HDR to MSEP TK 33A	Moist Sep Dr: Moist Separator 33A Drain Header to Moist Separator Drain Tank 33A	EC-F-20233 Sh. 1	Z-type
MSD-01.13B HDR to MSEP TK 33B	Moist Sep Dr: Moist Separator 33B Drain Header to Moist Separator Drain Tank 33B	EC-F-20233 Sh. 2	Z-type
MSD-01.14A TK 33A to HD TK	Moist Sep Dr: Moist Separator Drain Tank 33A to Heater Drain Tank	EC-F-20233 Sh. 1	Z-type
MSD-01.14B TK 33B to HD TK	Moist Sep Dr: Moist Separator Drain Tank 33B to Heater Drain Tank	EC-F-20233 Sh. 2	Z-type
MSD-01.1A_1 MSEP 31A to HDR	Moist Sep Dr: Moist Separator 31A Drain to Header (Line 1 of 3)	EC-F-20233 Sh. 1	Z-type
MSD-01.1A_2 MSEP 31A to HDR	Moist Sep Dr: Moist Separator 31A Drain to Header (Line 2 of 3)	EC-F-20233 Sh. 1	Z-type
MSD-01.1A_3 MSEP 31A to HDR	Moist Sep Dr: Moist Separator 31A Drain to Header (Line 3 of 3)	EC-F-20233 Sh. 1	Z-type
MSD-01.1B_1 MSEP 31B to HDR	Moist Sep Dr: Moist Separator 31B Drain to Header (Line 1 of 3)	EC-F-20233 Sh. 2	Z-type
MSD-01.1B_2 MSEP 31B to HDR	Moist Sep Dr: Moist Separator 31B Drain to Header (Line 2 of 3)	EC-F-20233 Sh. 2	Z-type
MSD-01.1B_3 MSEP 31B to HDR	Moist Sep Dr: Moist Separator 31B Drain to Header (Line 3 of 3)	EC-F-20233 Sh. 2	Z-type
MSD-01.2A MSEP 31A DR HDR	Moist Sep Dr: Moist Separator 31A Drain Header Upstream of Takeoff to Moist Separator Drain Tank	EC-F-20233 Sh. 1	Z-type
MSD-01.2B MSEP 31B DR HDR	Moist Sep Dr: Moist Separator 31B Drain Header Upstream of Takeoff to Moist Separator Drain Tank	EC-F-20233 Sh. 2	Z-type
MSD-01.3A HDR to MSEP TK 31A	Moist Sep Dr: Moist Separator 31A Drain Header to Moist Separator Drain Tank 31A	EC-F-20233 Sh. 1	Z-type
MSD-01.3B HDR to MSEP TK 31B	Moist Sep Dr: Moist Separator 31B Drain Header to Moist Separator Drain Tank 31B	EC-F-20233 Sh. 2	Z-type

CHECWORKS Line Name	Line Description	Flow Diagram No.	Op Cond Source
MSD-01.4A TK 31A to HD TK	Moist Sep Dr: Moist Separator Drain Tank 31A to Heater Drain Tank	EC-F-20233 Sh. 1	Z-type
MSD-01.4B TK 31B to HD TK	Moist Sep Dr: Moist Separator Drain Tank 31B to Heater Drain Tank	EC-F-20233 Sh. 2	Z-type
MSD-01.6A_1 MSEP 32A to HDR	Moist Sep Dr: Moist Separator 32A Drain to Header (Line 1 of 3)	EC-F-20233 Sh. 1	Z-type
MSD-01.6A_2 MSEP 32A to HDR	Moist Sep Dr: Moist Separator 32A Drain to Header (Line 2 of 3)	EC-F-20233 Sh. 1	Z-type
MSD-01.6A_3 MSEP 32A to HDR	Moist Sep Dr: Moist Separator 32A Drain to Header (Line 3 of 3)	EC-F-20233 Sh. 1	Z-type
MSD-01.6B_1 MSEP 32B to HDR	Moist Sep Dr: Moist Separator 32B Drain to Header (Line 1 of 3)	EC-F-20233 Sh. 2	Z-type
MSD-01.6B_2 MSEP 32B to HDR	Moist Sep Dr: Moist Separator 32B Drain to Header (Line 2 of 3)	EC-F-20233 Sh. 2	Z-type
MSD-01.6B_3 MSEP 32B to HDR	Moist Sep Dr: Moist Separator 32B Drain to Header (Line 3 of 3)	EC-F-20233 Sh. 2	Z-type
MSD-01.7A MSEP 32A DR HDR	Moist Sep Dr: Moist Separator 32A Drain Header Upstream of Takeoff to Moist Separator Drain Tank	EC-F-20233 Sh. 1	Z-type
MSD-01.7B MSEP 32B DR HDR	Moist Sep Dr: Moist Separator 32B Drain Header Upstream of Takeoff to Moist Separator Drain Tank	EC-F-20233 Sh. 2	Z-type
MSD-01.8A HDR to MSEP TK 32A	Moist Sep Dr: Moist Separator 32A Drain Header to Moist Separator Drain Tank 32A	EC-F-20233 Sh. 1	Z-type
MSD-01.8B HDR to MSEP TK 32B	Moist Sep Dr: Moist Separator 32B Drain Header to Moist Separator Drain Tank 32B	EC-F-20233 Sh. 2	Z-type
MSD-01.9A TK 32A to HD TK	Moist Sep Dr: Moist Separator Drain Tank 32A to Heater Drain Tank	EC-F-20233 Sh. 1	Z-type
MSD-01.9B TK 32B to HD TK	Moist Sep Dr: Moist Separator Drain Tank 32B to Heater Drain Tank	EC-F-20233 Sh. 2	Z-type
PD-01.1 PRESEP 1B DR to HDR	Presep Dr: Moisture Preseparator 1B Drain to Header	EC-F-20223 Sh. 1	Z-type
PD-01.3 PRESEP 1A DR to HDR	Presep Dr: Moisture Preseparator 1A Drain to Header	EC-F-20223 Sh. 1	Z-type

CHECWORKS Line Name	Line Description	Flow Diagram No.	Op Cond Source
PD-01.5 PRESEP 2B DR to HDR	Presep Dr: Moisture Preseparator 2B Drain to Header	EC-F-20223 Sh. 1	Z-type
PD-01.7 PRESEP 2A DR to HDR	Presep Dr: Moisture Preseparator 2A Drain to Header	EC-F-20223 Sh. 1	Z-type
PD-02.2 PRESEP HDR to HD TK	Presep Dr: Moisture Preseparators Drain Header Between 1A Connection and 2B Connection	EC-F-20223 Sh. 1	Z-type
PD-02.3 PRESEP HDR to HD TK	Presep Dr: Moisture Preseparators Drain Header Between 2B Connection and 2A Connection	EC-F-20223 Sh. 1	Z-type
PD-02.4 PRESEP HDR to HD TK	Presep Dr: Moisture Preseparators Drain Header to Heater Drain Tank	EC-F-20223 Sh. 1	Z-type
RHD-01.10A_1 RH 33A to TK 33A	Reheater Dr: Reheater 33A Drain to Reheater Drain Tank 33A	EC-F-20233 Sh. 1	HBD
RHD-01.10A_2 TK 33A to A HDR	Reheater Dr: Reheater Drain Tank 33A to Reheater Drain Tank "A-Train" Header	EC-F-20233 Sh. 1	HBD
RHD-01.10B_1 RH 33B to TK 33B	Reheater Dr: Reheater 33B Drain to Reheater Drain Tank 33B	EC-F-20233 Sh. 2	HBD
RHD-01.10B_2 TK 33B to B HDR	Reheater Dr: Reheater Drain Tank 33B to Reheater Drain Tank "B-Train" Header	EC-F-20233 Sh. 2	HBD
RHD-01.1A_1 RH 31A to TK 31A	Reheater Dr: Reheater 31A Drain to Reheater Drain Tank 31A	EC-F-20233 Sh. 1	HBD
RHD-01.1A_2 TK 31A to A HDR	Reheater Dr: Reheater Drain Tank 31A to Reheater Drain Tank "A-Train" Header	EC-F-20233 Sh. 1	HBD
RHD-01.1B_1 RH 31B to TK 31B	Reheater Dr: Reheater 31B Drain to Reheater Drain Tank 31B	EC-F-20233 Sh. 2	HBD
RHD-01.1B_2 TK 31B to B HDR	Reheater Dr: Reheater Drain Tank 31B to Reheater Drain Tank "B-Train" Header	EC-F-20233 Sh. 2	HBD
RHD-01.3A_1 RH 32A to TK 32A	Reheater Dr: Reheater 32A Drain to Reheater Drain Tank 32A	EC-F-20233 Sh. 1	HBD
RHD-01.3A_2 TK 32A to A HDR	Reheater Dr: Reheater Drain Tank 32A to Reheater Drain Tank "A-Train" Header	EC-F-20233 Sh. 1	HBD
RHD-01.3B_1 RH 32B to TK 32B	Reheater Dr: Reheater 32B Drain to Reheater Drain Tank 32B	EC-F-20233 Sh. 2	HBD

CHECWORKS Line Name	Line Description	Flow Diagram No.	Op Cond Source
RHD-01.3B_2 TK 32B to B HDR	Reheater Dr: Reheater Drain Tank 32B to Reheater Drain Tank "B-Train" Header	EC-F-20233 Sh. 2	HBD
RHD-02.10A TK A HDR to FWH 36	Reheater Dr: Reheater Drain Tanks Outlet "A-Train" Header Between FW Heater 36C Takeoff and FW Heater 36B Takeoff	EC-F-20233 Sh. 2	HBD
RHD-02.10B B HDR to FWH 36A	Reheater Dr: Reheater Drain Tank "B-Train" Header to FW Heater 36A	EC-F-20233 Sh. 2	HBD
RHD-02.11A A HDR to FWH 36A	Reheater Dr: Reheater Drain Tank "A-Train" Header to FW Heater 36A	EC-F-20233 Sh. 2	HBD
RHD-02.12B B HDR to FWH 36B	Reheater Dr: Reheater Drain Tank "B-Train" Header to FW Heater 36B	EC-F-20233 Sh. 2	HBD
RHD-02.13A A HDR to FWH 36B	Reheater Dr: Reheater Drain Tank "A-Train" Header to FW Heater 36B	EC-F-20233 Sh. 2	HBD
RHD-02.14B B HDR to FWH 36C	Reheater Dr: Reheater Drain Tank "B-Train" Header to FW Heater 36C	EC-F-20233 Sh. 2	HBD
RHD-02.15A A HDR to FWH 36C	Reheater Dr: Reheater Drain Tank "A-Train" Header to FW Heater 36C	EC-F-20233 Sh. 2	HBD
RHD-02.7B TK B HDR to FWH 36	Reheater Dr: Reheater Drain Tanks Outlet "B-Train" Header Between Tank 33B Connection and Tank 32B Connection	EC-F-20233 Sh. 2	HBD
RHD-02.8A TK A HDR to FWH 36	Reheater Dr: Reheater Drain Tanks Outlet "A-Train" Header Between Tank 33A Connection and Tank 31A Connection	EC-F-20233 Sh. 1	HBD
RHD-02.8B TK B HDR to FWH 36	Reheater Dr: Reheater Drain Tanks Outlet "B-Train" Header Between Tank 32B Connection and FW Heater 36C Takeoff	EC-F-20233 Sh. 2	HBD
RHD-02.9A TK A HDR to FWH 36	Reheater Dr: Reheater Drain Tanks Outlet "A-Train" Header Between Tank 31A Connection and FW Heater 36C Takeoff	EC-F-20233 Sh. 1	HBD
RHD-02.9B TK B HDR to FWH 36	Reheater Dr: Reheater Drain Tanks Outlet "B-Train" Header Between FW Heater 36C Takeoff and FW Heater 36B Takeoff	EC-F-20233 Sh. 2	HBD

Appendix B

Component Level Wear Rate Changes due to SPU

		[redacted]			[redacted]			[redacted]			Most Susceptible (Pre-SPU)	Greatest Change	Notes
Component	**Wear Rate Analysis Run**	Original	SPU	Change	Original	SPU	Change	Original	SPU	Change			
EX-05.1A-01N	ES: LP TO 32 HEATERS	0.408	0.476	16.5%	196.5	206.9	10.4	35.67	26.66	-25.3%	1		Typical of 6 outlet nozzles in this Wear R rate.
EX-05.1A-04N	ES: LP TO 32 HEATERS	0.408	0.476	16.5%	196.5	206.9	10.4	23.87	17.89	-25.1%	2		Typical of 6 inlet nozzles in this Wear Ra rate.
EX-05.2A-02E	ES: LP TO 32 HEATERS	0.408	0.476	16.5%	196.5	206.9	10.4	22.38	17.01	-24.0%	3		Typical of 3 90 deg elbows (w/in 1 pipe di Wear Rate Analysis run with the highest
EX-05.1A-03E	ES: LP TO 32 HEATERS	0.408	0.476	16.5%	196.5	206.9	10.4	20.33	15.45	-24.0%	4		Typical of 6 45 deg elbows (w/in 1 pipe di Wear Rate Analysis run with the highest
EX-05.2A-05E	ES: LP TO 32 HEATERS	0.408	0.476	16.5%	196.5	206.9	10.4	19.17	14.57	-24.0%	5		Typical of 3 45 deg elbows in this Wear R rate.
[redacted]													
EX-04.21-02P	ES: LP TO 33 HEATERS	0.476	0.473	-0.7%	246.1	254.8	8.7	4.10	11.97	192.1%		1	
EX-04.6-07T	ES: LP TO 33 HEATERS	0.476	0.473	-0.7%	246.1	254.8	8.7	4.10	11.98	192.1%		2	
EX-04.6-02P	ES: LP TO 33 HEATERS	0.476	0.473	-0.7%	246.1	254.8	8.7	4.10	11.97	192.0%		3	
EX-04.13-07T	ES: LP TO 33 HEATERS	0.476	0.473	-0.7%	246.1	254.8	8.7	4.11	11.98	191.8%		4	Typical of 2 type-15 tees in this Wear Rat change in wear rate.
EX-04.13-02P	ES: LP TO 33 HEATERS	0.476	0.473	-0.7%	246.1	254.8	8.7	4.11	11.98	191.8%		5	

Appendix C

Steam Cycle Level Wear Rate Changes due to SPU

Steam Cycle Loc. No.	Location: System	Location: Steam Cycle Location[1]	No. of Comps Analyzed	Wear Rate Change[2]: Avg Change (%)	Wear Rate Change[2]: Max Change (%)	Wear Rate Change[2]: Min Change (%)	Avg Absolute Change (mils/yr)	Avg SPU Wear Rate (mils/yr)	Temperature[3]: SPU Temp (deg F)	Temperature[3]: Temp Change (deg F)	Steam Quality[4]: SPU Quality (%)	Steam Quality[4]: Quality Change (%)	Flow Rate[5]: SPU Flow Rate (Mlb/hr)	Flow Rate[5]: Cha Flo
1	FW	FWH 6 to Steam Gen	219	11.8%	13.8%	11.7%	0.7	6.6	430.4	7.2	0	0	13.84	
2	FW	BFP to FWH 6	103	-0.7%	1.4%	-0.8%	0.0	4.1	377.4	10.1	0	0	13.84	
3	CD	Connection from HDP to BFP	57	3.5%	5.3%	3.3%	0.1	2.8	375.3	6.4	0	0	13.84	
4	CD	FWH 5 to Connection from HDP	37	2.2%	4.0%	2.1%	0.1	3.3	377.3	5.7	0	0	9.90	
5	CD	FWH 4 to FWH 5	46	5.5%	7.4%	5.4%	0.2	4.7	298.3	4.7	0	0	9.90	
6	CD	FWH 3 to FWH 4	39	5.6%	7.3%	5.5%	0.2	3.9	245.2	1.4	0	0	9.90	
7	CD	FWH 2 to FWH 3	146	10.0%	11.4%	9.2%	0.3	3.0	198.0	6.2	0	0	9.90	
8	CD	FWH 1 to FWH 2	39	5.2%	5.2%	5.2%	0.2	3.7	156.9	1.2	0	0	9.90	
9	HD	HDP Outlet to CD System Connection	46	8.0%	9.0%	8.0%	0.4	5.3	370.3	8.9	0	0	3.94	
10	HD	HD Tank to HDP	17	9.0%	9.1%	9.0%	0.2	2.5	369.5	-4.6	0	0	3.94	
11	HD	FWH 6 to HD Tank	37	-1.1%	-0.7%	-4.9%	0.0	2.5	394.2	7.5	0	0	1.72	
12	HD	FWH 5 to HD Tank	48	6.3%	6.3%	6.3%	0.1	1.8	379.8	5.7	0	0	1.02	
13	HD	FWH 4 to FWH 3	92	-27.0%	-24.6%	-38.1%	-0.7	1.9	253.0	3.0	0	0	0.55	
14	HD	FWH 3 to FWH 2	148	-58.2%	-57.2%	-62.9%	-2.0	1.5	204.1	7.2	0	0	1.02	
15	HD	FWH 2 to FWH 1	42	-67.8%	-67.5%	-70.8%	-1.9	0.9	165.7	3.2	0	0	1.50	
17	EX	HP Extraction to FWH 6	8	-43.9%	-43.8%	-44.0%	-4.8	6.2	441.8	12.7	93.7	2.1	0.85	2
18	EX	Presep Extraction to FWH 5	83	71.7%	78.8%	31.3%	3.3	7.8	385.2	9.6	93.9	-1.5	0.98	
19	PD & MSD	Moist Separator & Pre-Separator Drains to HD Tank	227	29.8%	66.3%	-33.2%	0.1	1.1	384.8	-4.3	0	0	1.10	
20	RHD	Reheater Drain to FWH 6	517	9.6%	9.7%	6.7%	0.3	3.4	489.8	-4.2	3.9	1.9	0.87	
21	EX	LP Extraction to FWH 4	119	-100.0%	-100.0%	-100.0%	-3.3	0.0	337.1	39.1	100	0.2	0.55	
22	EX	LP Extraction to FWH 3	158	165.0%	192.1%	83.9%	8.2	13.0	254.8	8.7	90.5	-5.1	0.47	-
23	EX	LP Extraction to FWH 2	30	-21.1%	10.2%	-25.3%	-5.4	17.2	206.9	10.4	75.1	8.7	0.48	1
24	EX	LP Extraction to FWH 1	54	30.4%	32.8%	2.3%	2.3	9.5	168.3	5.7	77.1	4.4	0.79	1

Location				Wear Rate Change[2]					Temperature[3]		Steam Quality[4]		Flow Rate[5]	
Steam Cycle Loc. No.	System	Steam Cycle Location	No. of Comps Analyzed	Avg Change (%)	Max Change (%)	Min Change (%)	Avg Absolute Change (mils/yr)	Avg SPU Wear Rate (mils/yr)	SPU Temp (deg F)	Temp Change (deg F)	SPU Quality (%)	Quality Change (%)	SPU Flow Rate (Mlb/hr)	Cha Flo
16	HD	FWH 1 to Condenser	0	--	--	--	--	--	91.8	-10.5	0	0	2.29	
25	MS	Steam Gen to HP Turbine	0	--	--	--	--	--	497.9	-11.8	99.6	-0.3	12.89	
26	MS	Steam Gen to Reheater Shell	0	--	--	--	--	--	507.3	-7.9	99.8	-0.19	0.87	
27	MS	HP Turbine to Moist Separator	0	--	--	--	--	--	387.3	0.9	90.3	-0.7	12.04	
28	MS	Moist Separator to Reheater	0	--	--	--	--	--	--	--	--	--	--	
29	MS	Reheater to LP Extraction	0	--	--	--	--	--	482.6	5.1	100	0	9.78	
30	SG	Steam Gen Blowdown	0	--	--	--	--	--	512.4	-2.8	0	0	0.06	
31	MS	Boiler Feed Pump Turbine Drain	0	--	--	--	--	--	101.7	0	87.4	0	0.16	

Total Components Analyzed= 2312 (All CHECWORKS modeled components except those containing Chromium)

(1) See Appendix A for a cross-reference between the Steam Cycle Location and the CHECWORKS lines in these locations.
(2) Values in GREEN show where FAC has decreased while values in RED show where FAC has increased. In the wear rate change columns negative values are GREEN and po
(3) In the temperature change field, values that move toward the FAC peak (at ~275 deg F for 1-phase and 300 deg F for 2-phase) are RED while those that move away from the p
(4) In the quality change field, values that move toward the FAC peak (at ~50%) are RED while those that move away from the peak are GREEN.
(5) Values in GREEN show where flow rate has decreased while values in RED show where flow rate has increased. FAC rates increase with increasing flow rates and decrease w

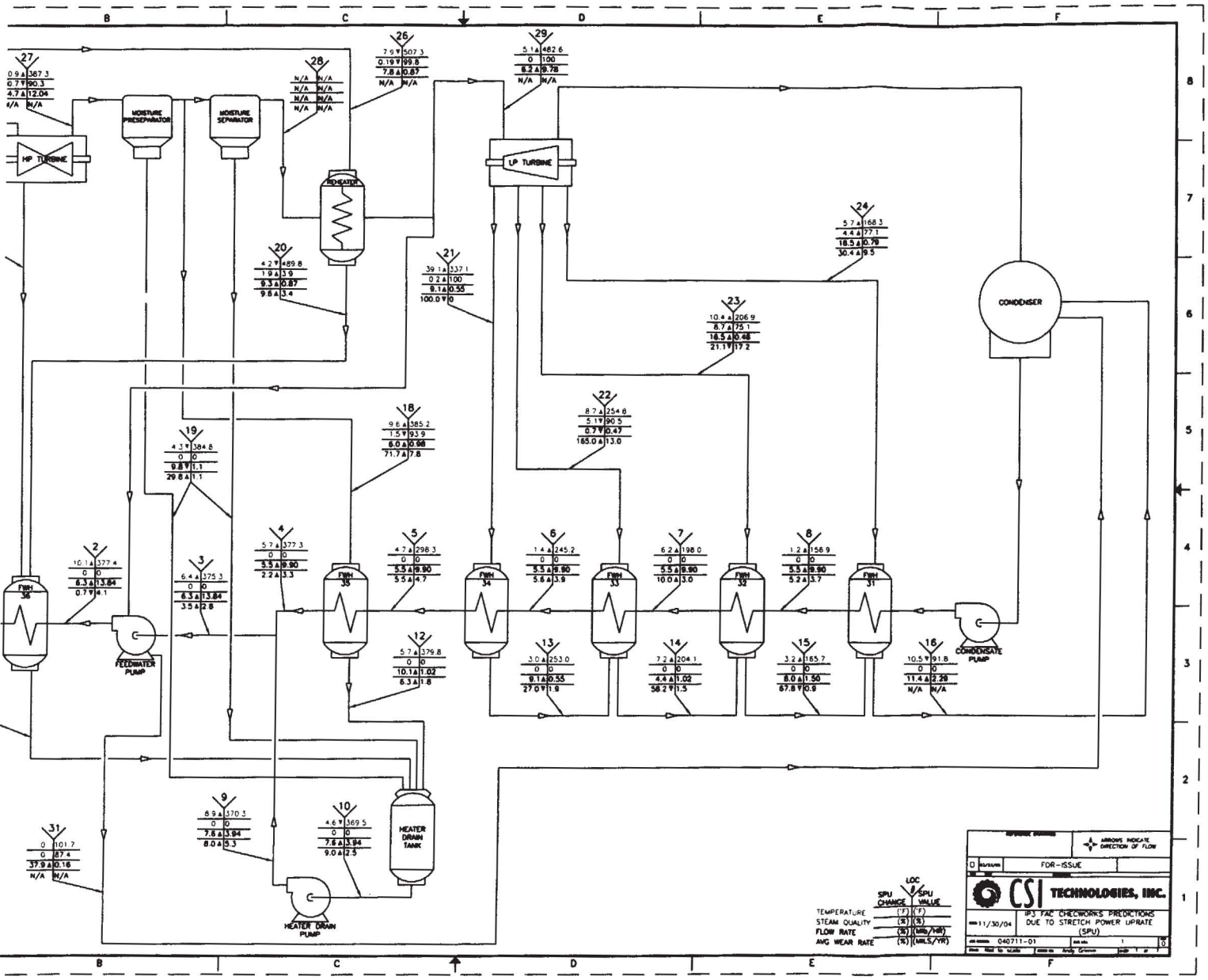
HP TURBINE
MOISTURE PRESEPARATOR
MOISTURE SEPARATOR
REHEATER
LP TURBINE
CONDENSER
FWH 36
FWH 35
FWH 34
FWH 33
FWH 32
FWH 31
FEEDWATER PUMP
CONDENSATE PUMP
HEATER DRAIN TANK
HEATER DRAIN PUMP
FOR-ISSUE
CSI TECHNOLOGIES, INC.
IP3 TAC CHECWORKS PREDICTIONS DUE TO STRETCH POWER UPRATE (SPU)
11/30/04
040711-01
TEMPERATURE
STEAM QUALITY
FLOW RATE
AVG WEAR RATE

Attachment A

Referenced Correspondence and Communications

Reference 7.3.1

Email from Harry Hartjen (IP3) to Daniel R. Poe (CSI Technologies), dated 10/12/2004, regarding SPU implementation dates, CSI Doc. No. 04071111.

Dan:

Following are input to the DDIR:

No. 8A SPU operations are expected to be implemented on 11/22/2004 at IP2.

No. 9A SPU operations are expected to be implemented on 04/08/2005 at IP3.

Harry Hartjen

(914) 736-8356

Reference 7.3.2

Email from Harry Hartjen (IP3) to Daniel R. Poe (CSI Technologies), dated 10/18/2004, regarding operational and configuration changes due to SPU, CSI Doc. No. 04071113.

Dan:

Attached is the response from our engineer, the Shaw Group to your request for a listing of all operational and/or configuration changes due to the SPU.
Note that there are no operational and/or configuration changes to IP2/IP3 due to the SPU.
This information was required for DDIR No. 6 and 7.

Per your request, a hard copy set of IP3 FAC isometric drawings will be mailed today to your attention. Note that drawing EC-H-50077 is not yet revised in this mailing. For correct piping configuration, see the information I sent you for the 3R12 Checworks update.

Included in this mailing is:

1. Flow Accelerated Corrosion Program Checworks Analysis Enhancement, Technical Report No. 00130-TR-001 Revision 0 Volume 1 of 1. December, 2000. This report serves as the Unit 2 Checworks Model documentation. In addition to the Checworks Wear Rate Analysis Run Definitions listed in Table 1.0, there are the following two additions:
    a. X-under w/exp joints
    b. CND FWH 22 to FWH 23; this was added due to the SPU.

    This information was required for DDIR No. 4

Harry Hartjen

From: Cunningham, Glenn [mailto:glenn.cunningham@shawgrp.com]
Sent: Thursday, October 07, 2004 2:45 PM
To: Hartjen, Harry
Cc: Scanlon, Michael; Chakrabarti, Syamal
Subject: RE: RAI FAC-1

Harry,

There are no operational changes for Steam Plant Systems, such as use of additional trains or use of bypass lines not currently in operation, associated with uprate of IP2 / IP3. Changes due to the uprate which affect FAC are primarily changes in system flowrates and temperatures, which are documented in the Heat Balance calculations. Impact of these changes on piping velocities and temperatures is addressed in the applicable sections of the BOP Uprate Engineering Reports, forwarded to Entergy for review.

Modifications associated with the uprate of IP2 / IP3 include: (1) MSR internal moisture separation system replacement, (2) HP Turbine rotor replacement, (3) HP turbine interstage drain piping modification, and (4) Relocation of HP turbine 1st stage pressure taps.

Regards,

Glenn C.

From: Hartjen, Harry [mailto:HHartje@entergy.com]
Sent: Wednesday, October 06, 2004 1:30 PM

To: Cunningham, Glenn
Subject: RE: RAI FAC-1

Glen:
This is to confirm that the wear rate comparison will be completed by 12/31/2004.

As I mentioned to you we are having a contractor perform the update to our Checworks models. One of the inputs I have to provide to them is:
The listing of all Unit 2 and Unit 3 operational and/or configuration changes due to the power uprate (i.e., additional trains in operation, bypass lines operated at full power, etc.)

Do you have this information or can you direct my question to someone who has this information.

Thanks,

Harry Hartjen
(914) 736-8356

From: Cunningham, Glenn [mailto:glenn.cunningham@shawgrp.com]
Sent: Wednesday, October 06, 2004 12:50 PM
To: Hartjen, Harry
Subject: FW: RAI FAC-1

From: Cunningham, Glenn
Sent: Wednesday, October 06, 2004 12:41 PM
To: 'hartje@entergy.com'
Subject: RAI FAC-1

Harry,

As I indicated, I made a few edits in your input. Please confirm that the wear rate comparison discussed in the last sentence will be completed by the end of 2004.

Thanks,

Glenn C.

**********Internet Email Confidentiality Footer**********

Privileged/Confidential Information may be contained in this message. If you are not the addressee indicated in this message (or responsible for delivery of the message to such person), you may not copy or deliver this message to anyone. In such case, you should destroy this message and notify the sender by reply email. Please advise immediately if you or your employer do not consent to Internet email for messages of this kind. Opinions, conclusions and other information in this message that do not relate to the official business of The Shaw Group Inc. or its subsidiaries shall be understood as neither given nor endorsed by it.

The Shaw Group Inc.
http://www.shawgrp.com

**********Internet Email Confidentiality Footer**********

Privileged/Confidential Information may be contained in this message. If you are not the addressee indicated in this message (or responsible for delivery of the message to such person), you may not copy or deliver this message to anyone. In such case, you should destroy this message and notify the sender by reply email. Please advise immediately if you or your employer do not consent to Internet email for messages of this kind. Opinions, conclusions and other information in this message that do not relate to the official business of The Shaw Group Inc. or its subsidiaries shall be understood as neither given nor endorsed by it.

The Shaw Group Inc.
http://www.shawgrp.com

Reference 7.3.3

Email from Ron Macina (IP3) to Brian Trudeau (CSI Technologies), dated 1/10/2005, regarding addition al Heat Balance Diagrams and uprate start dates, CSI Doc. No 04071140.

CSI Doc. No. 04071140

Brian,

Please find below the requested Heat Balances/Information.
1) IP3 Pre and Post Appendix K Heat Balances
<<IP3TuningR4 Pre Appendix K (3037 NSS Pwr).pdf>> <<IP3TuningR4 Post Apendix K.pdf>>
2) IP2 Pre Appendix K Heat Balance
<<IP2-TuningR4 Pre Appendix K (3090 NSS Pwr).pdf>>
3) Start Date for IP3 Appendix K uprate was 12/22/02
4) Start Date for IP2 Appendix K uprate was 5/23/03

Thanks,
Ron Macina
914-736-8363

-----Original Message-----
From: Brian Trudeau [mailto:btrudeau@csitechnologies.com]
Sent: Tuesday, December 28, 2004 3:52 PM
To: Macina, Ron
Subject: Request for Additional HBDs

CSI Doc. No. 04071137

Ron,

Based on our discussion earlier today, it appears that we have some additional work to do on this end. We plan on modeling all three power levels (100% - the Original power level, ~101.4% - the Appendix K power level, and 105% - the SPU power level) for each unit. In doing this, we will capture plant conditions at each point in history.

To complete this task, we will need the following input:

(1) Unit 3 PEPSE or HBD at ~101.4% power (the Appendix K power uprate)
(2) Unit 2 Original PEPSE or HBD at 100% power (pre-Appendix K)
(3) Unit 3 Start date for the Appendix K Uprate
(4) Unit 2 Start date for the Appendix K Uprate

Please let me know if you have any questions. We will be contacting Harry to inform him of this plan.

Thank you,

Brian Trudeau
CSI Technologies, Inc.
(847) 836-3000 ext. 717
www.csitechnologies.com

CALCULATION APPROVAL COVER SHEET

Document Title: Indian Point Unit 3
CHECWORKS Power Uprate Analysis

Document No.: 040711-01

Client: Entergy Nuclear Northeast

Project No.: 040711

This calculation has been prepared in accordance with Section 4.3 of the CSI Quality System Manual, Revision 2.

Revision: 0 (For-Use) 47 pages

Prepared: _____ Date: 3/23/05
Brian L. Trudeau (CSI)

Verified: _____ FOR Date: 3/23/05
Michael P. Aplington (CSI)

Approved: _____ Date: 3/23/05
Daniel R. Poe (CSI)

Approved: _____ Date: _____

Revision Control Sheet

Project Number: **040711**
Project Name: **Indian Point Units 2 & 3 CHECWORKS Power Uprate Analysis**
Client: **Entergy Nuclear Northeast**
Document Title: **Indian Point Unit 3 CHECWORKS Power Uprate Analysis**
Document Number: **040711-01**

Rev.	Date	Description of Changes	CSI Approval	Client Approval
0	3/23/05	Initial Issue – For Use	DRL	