AREVA

U.S. EPR Pressure-Temperature Limits Methodology for RCS Heatup and Cooldown

ANP-10283NP-A
Revision 2

Technical Report

August 2012

AREVA NP Inc.

UNITED STATES
NUCLEAR REGULATORY COMMISSION
WASHINGTON, D.C. 20555-0001

August 1, 2012

Mr. Pedro Salas, Manager
U.S. EPR New Plants Regulatory Affairs
AREVA NP Inc.
3315 Old Forest Road
P.O. Box 10935
Lynchburg, VA 24506-0935

SUBJECT: SAFETY EVALUATION REPORT FOR THE AREVA U.S. EPR PRESSURE AND TEMPERATURE LIMITS REPORT

Dear Mr. Salas:

By letter dated April 30, 2009 (Agencywide Documents Access and Management System (ADAMS) Accession No. ML091270302), AREVA NP, Inc. (the applicant), submitted ANP-10283P, Revision 1, "U.S. EPR Pressure-Temperature Limits Methodology for RCS Heatup and Cooldown," to provide the generic basis for the use of the pressure-temperature (P-T) limit curves found in the U.S. EPR Final Safety Analysis Report (FSAR), Figures 5.3-1 and 5.3-2. By letter dated April 13, 2012, the applicant provided Revision 2 to ANP-10283P (ADAMS Accession No. ML12108A093). The United States Nuclear Regulatory Commission (NRC) staff has completed its review of the methodology described in U.S. EPR Pressure Temperature Limits Report (PTLR) and documents its finding in the enclosed safety evaluation report (SER).

The enclosed SER concludes that the contents of the U.S. EPR PTLR conform to the staff's technical criteria for PTLRs, as defined in Attachment 1 of Generic Letter (GL) 96-03, "Relocation of the Pressure Temperature Limit and Low Temperature Overpressure Protection Limits." and that the PTLR has satisfied the requirements of Title 10, *Code of Federal Regulations* (10 CFR) Part 50, Appendix G, "Fracture Toughness Requirements." Furthermore, the NRC staff determined that the U.S. EPR PTLR is compatible with the U.S. EPR Technical Specifications (TSs) and that the PTLR-related TS provisions meet the technical criteria of GL 96-03.

Based on this evaluation, the NRC staff concludes that the methodology described in the U.S. EPR PTLR (ANP-10283P, Revision 2) is acceptable for generic use by U.S. EPR combined license (COL) applicants and licensees for establishing limiting P-T limit curves, Low Temperature Overpressure Protection (LTOP) system limits, and related input parameters. Pursuant to TS requirement 5.6.4c, future U.S. EPR COL licensees will be required to provide the PTLR to the NRC upon issuance for each reactor vessel fluence period and for any PTLR revision or supplement thereto. Finally, in accordance with GL 96-03, any subsequent changes in the methodology used to develop the P-T limits must be approved by the NRC.

The enclosed Safety Evaluation will be referenced in Section 5.3.2 of the NRC staff's Final Safety Evaluation for the U.S. EPR FSAR. If you have any questions regarding this matter, I may be reached at 301-415-3361.

Sincerely,

Getachew Tesfaye, Senior Project Manager
Licensing Branch 1
Division of New Reactor Licensing
Office of New Reactors

Docket No.: 52-020

cc: See next page

SAFETY EVALUATION BY THE OFFICE OF NEW REACTORS
REVIEW OF THE UNITED STATES EVOLUTIONARY POWER REACTOR (U.S. EPR)
GENERIC PRESSURE-TEMPERATURE LIMITS REPORT
AREVA NP Inc.

1.0 INTRODUCTION

By letter dated April 30, 2009 (ML091270302), AREVA NP Inc. (AREVA or the "applicant") submitted ANP-10283P, Revision 1, "U.S. EPR Pressure-Temperature Limits Methodology for RCS Heatup and Cooldown." This report was submitted in support of the U.S. EPR design certification application to provide the generic basis for the use of the pressure-temperature (P-T) limit curves found in the U.S. EPR Final Safety Analysis Report (FSAR), Figures 5.3-1 and 5.3-2. As such, this pressure-temperature limits report (PTLR) presents the methodology for developing the P-T limits for the reactor coolant pressure boundary (RCPB) of the U.S. EPR and contains an evaluation of the reactor vessel including the beltline, closure head, and nozzle regions. The information provided in this report is generic to the U.S. EPR design and is expected to apply to all combined license (COL) applicants referencing the U.S. EPR design certification.

The April 30, 2009, submittal did not contain sufficient technical information for the NRC staff to review the PTLR and calculate the P-T limits independently. This additional information was provided to the NRC staff in the applicant's responses to the NRC staff's requests for additional information (RAIs) (ML102390581, ML12104A220). Subsequently, in a letter dated April 13, 2012, the applicant provided Revision 2 to ANP-10283P (ML12108A093) which incorporated the proposed revisions documented in the applicant's RAI responses.

The first part of the NRC staff's review was to ensure that the information provided in the proposed PTLR and the revised TS pages met the guidance in Generic Letter (GL) 96-03, "Relocation of Pressure Temperature Limit Curves and Low Temperature Overpressure Protection System Limits." The second part of the NRC staff's review was to verify that the proposed P-T limits have been developed appropriately using the methodology provided in ANP-10283P (hereafter, referred to as the U.S. EPR PTLR).

2.0 REGULATORY EVALUATION

2.1 10 CFR Part 50 Requirements for Generating P-T Limits and Low Temperature Overpressure Protection (LTOP) System Limits for Pressurized Water Reactors

The U.S. Nuclear Regulatory Commission (NRC) has established requirements in 10 CFR Part 50, Appendix G in order to protect the integrity of the reactor coolant pressure boundary (RCPB) in nuclear power plants. 10 CFR Part 50, Appendix G requires that the P-T limits for an operating light-water reactor be at least as conservative as those that would be calculated using the methods of Appendix G to Section XI of the American Society of Mechanical Engineers (ASME) Boiler and Pressure Vessel (B&PV) Code (ASME Code, Section XI, Appendix G). For conditions with the core critical, P-T limits must be more conservative than the ASME Code, Section XI, Appendix G limits. Table 1 of 10 CFR Part 50, Appendix G provides a summary of the requirements for P-T limits relative the ASME Code, Section XI,

ENCLOSURE

Appendix G criteria, as well as the minimum temperature requirements, for bolting up the reactor vessel (RV) during normal and pressure testing operations. 10 CFR Part 50, Appendix G also requires that applicable surveillance data from reactor vessel (RV) material surveillance programs be incorporated into the calculations of plant-specific P-T limits, and that the P-T limits for operating reactors be generated using a method that accounts for the effects of neutron irradiation on the RCPB. The rule also establishes conservative requirements for determining the temperature and pressure setpoints for LTOP systems. P-T limits and LTOP system limits are subject to General Design Criteria (GDC) 14, GDC 15, GDC 30, and GDC 31 in 10 CFR Part 50, Appendix A.

10 CFR Part 50, Appendix H provides the NRC's criteria for the design and implementation of RV material surveillance programs for operating light-water reactors. The NRC's requirements for protecting the RVs of pressurized water reactors (PWRs) against pressurized thermal shock (PTS) events are given in 10 CFR 50.61.

The NRC staff's regulatory guidance related to determining the effects of radiation embrittlement on RV material parameters and P-T limit curves is found in Regulatory Guide (RG) 1.99, Revision 2, "Radiation Embrittlement of Reactor Vessel Materials." NRC staff guidance related to the review of P-T limit curves and PWR PTS criteria is found in Standard Review Plan (SRP) Section 5.3.2. NRC staff guidance related to the review of LTOP system limits is found in SRP Section 5.2.2.

The regulatory requirements for RV fluence calculations are specified in GDC 14, 30, and 31 of 10 CFR Part 50, Appendix A. In March 2001, the NRC staff issued RG 1.190, "Calculational and Dosimetry Methods for Determining Pressure Vessel Neutron Fluence." The NRC staff has approved RV fluence calculation methodologies that satisfy the requirements of GDC 14, GDC 30 and GDC 31 by adhering to the guidance in RG 1.190. Fluence calculations are acceptable if they are obtained using approved methodologies or methods that are shown to conform to the guidance in RG 1.190.

2.2 Technical Specification (TS) Requirements for P-T Limits and LTOP System Limits

Section 182a of the Atomic Energy Act of 1954 requires applicants for nuclear power plant operating licenses to include TSs as part of the operating license. The Commission's regulatory requirements related to the content of the TSs are set forth in 10 CFR 50.36. That regulation requires that TSs include items in five specific categories: (1) Safety limits, limiting safety system settings and limiting control settings; (2) limiting conditions of operation (LCOs); (3) surveillance requirements (SRs); (4) design features; and (5) administrative controls.

10 CFR 50.36(c)(2)(ii) requires that LCOs be established for the P-T limits and LTOP system limits because the parameters fall within the scope of Criterion 2 identified in the rule:

> Criterion 2: A process variable, design feature, or operating restriction that is an initial condition of a design basis accident or transient analysis that either assumes the failure of or presents a challenge to the integrity of a fission product barrier.

The P-T limits and LTOP system limits for PWR-designed light-water reactors fall within the scope of Criterion 2 of 10 CFR 50.36(c)(2)(ii) and are, therefore, ordinarily required to be included within the TS LCOs for a plant-specific facility operating license.

On January 31, 1996, the NRC staff issued GL 96-03, "Relocation of the Pressure-Temperature Limit Curves and Low Temperature Overpressure Protection System Limits," to inform licensees that they may request a license amendment to relocate the actual P-T limit curves and LTOP system limit values from the TS LCOs on P-T limits and LTOP system limits and into a PTLR or other licensee-controlled document that would be administratively controlled through the Administrative Controls Section of the TSs. For the case of COL applicants referencing previously certified standard designs, the design-limiting P-T limits, LTOP system limits, and related input parameters may be included in a PTLR that is generic to the certified design. GL 96-03 indicate that licensees or applicants seeking to locate P-T limits and LTOP system limits for their reactors in PTLRs would need to generate their P-T limits and LTOP system limits in accordance with an NRC-approved methodology and that the methodology used to generate the P-T limits and LTOP system limits would need to comply with the requirements of 10 CFR Part 50, Appendices G and H. Furthermore, the methodology used to generate the P-T limits and LTOP system limits would need to be incorporated by reference in the administrative controls section of the TS. The GL also states that the TS administrative controls section for the PTLR would need to reference the staff's safety evaluation (SE) issued on the PTLR methodology and that the PTLR be defined in Section 1.0 of the TS. Attachment 1 to GL 96-03 provides a list of the criteria that the approved PTLR methodology and PTLR application would need to meet.

3.0 TECHNICAL EVALUATION

3.1 U.S. EPR Generic Technical Specification Requirements for Implementation and Control of a PTLR

The U.S. EPR Generic Technical Specifications (TSs) contain all of the necessary provisions required for the implementation and control of a PTLR. The U.S. EPR Generic TSs are provided in Chapter 16 of the U.S. EPR FSAR. The relevant generic TS requirements include the TS definition of the PTLR (TS Section 1.1); the TS LCOs for the RCS P-T limits (LCO 3.4.3) and the LTOP System (LCO 3.4.11), including LCO Action Statements, Surveillance Requirements, and related applicability criteria; and the necessary administrative controls governing the PTLR content and reporting requirements (TS 5.6.4). All of the TS pages related to the implementation and control of a PTLR are acceptable to the staff, pending the approval of a PTLR that is generic to the U.S. EPR standard plant design. U.S. EPR PTLR, Section 6.1, states that the PTLR has been prepared to meet the requirements of U.S. EPR Generic Technical Specifications Section 5.6.4 and the technical criteria of GL 96-03.

3.2 Evaluation of the U.S. EPR Generic PTLR Contents and Methodology against the Seven Criteria for PTLR Contents in Attachment 1 of GL 96-03

The U.S. EPR PTLR provides the generic P-T limits and LTOP system limits for the U.S. EPR RV and the methodology for their development. This PTLR is generic for the U.S. EPR design and is specifically referenced in Section 5.6.4 of the U.S. EPR Generic TSs as the controlling document governing future changes to PTLRs for U.S. EPR standard plants.

Accordingly, the PLTR utilizes generic inputs for RV beltline material chemistry, initial nil-ductility reference temperature (RT_{NDT}) values, and projected neutron fluence, to determine the P-T limit curves. These generic inputs are intended to be bounding for the U.S. EPR standard plant design and represent the maximum allowable limits on the input parameters for any specific U.S. EPR standard plant. Therefore, these generic inputs will be substantiated for use in a PTLR by any COL licensee referencing the U.S. EPR standard plant design in order to verify that the actual plant-specific RV beltline properties remain bounded by the generic inputs contained in the PTLR.

Attachment 1 of GL 96-03 contains seven technical criteria (PTLR criteria) for which the contents of PTLRs should conform if P-T limits and LTOP system limits are to be located in a PTLR. The staff's evaluation of the contents of the U.S. EPR PTLR against the seven criteria in Attachment 1 of GL 96-03 are given in the subsections that follow.

3.2.1 *PTLR Criterion 1*

PTLR Criterion 1 states that the PTLR contents should include the neutron-fluence values that are used in the calculations of the adjusted reference temperature (ART) values for the P-T limit calculations. Accurate and reliable neutron-fluence values are required in order to satisfy the provisions GDC 14, GDC 30, and GDC 31 of 10 CFR Part 50, Appendix A, as well as the specific fracture toughness requirements of 10 CFR Part 50, Appendix G and 10 CFR 50.61. U.S. EPR PTLR, Section 3.1, "Neutron Fluence Methodology," states that the methodology for determining the projected fluences used in the ART calculation is defined in Topical Report BAW-2241P-A, "Fluence and Uncertainty Methodologies," and conforms to the guidance of RG 1.190. In addition, AREVA provided peak RV neutron fluence values projected to 60 effective full-power years (EFPY) of facility operation in Table 6-1 of the PTLR. The NRC staff determined that these 60 EFPY neutron-fluence values were calculated using an NRC-approved methodology that is consistent with the guidelines in RG 1.190. The inclusion of valid peak RV neutron fluence values calculated using a neutron-fluence methodology that conforms to with RG 1.190 satisfies the provisions of PTLR Criterion 1. Therefore, the NRC staff concluded that PTLR Criterion 1 is satisfied.

3.2.2 *PTLR Criterion 2*

10 CFR Part 50, Appendix H provides the NRC requirements for designing and implementing RV material surveillance programs. The rule requires that RV material surveillance programs for operating reactors comply with the specifications of American Society for Testing and Materials (ASTM) Standard Procedure E 185, "Standard Practice for Conducting Surveillance Tests for Light-Water Cooled Nuclear Power Reactor Vessels." The rule requires that the program design and the surveillance capsule withdrawal schedules for the programs must meet the edition of E 185 that is current on the issue date of the ASME B&PV Code to which the RV was purchased, although the rule permits more recent versions of E 185 to be used, up through the 1982 version.

To ensure conformance with these requirements, PTLR Criterion 2 states that the PTLR should either provide the RV surveillance capsule withdrawal schedule or provide references, by title and number, for the documents containing the RV surveillance capsule withdrawal schedule. The criterion also states that the PTLR should reference, by title and number, any applicable

surveillance capsule reports that have been placed on the docket by the licensee requesting approval of the PTLR for its units. This criterion assures that the adjusted reference temperature (ART) calculations will appropriately follow the RV material surveillance program requirements of 10 CFR Part 50, Appendix H. A discussion of the U.S. EPR RV material surveillance program is provided in Sections 3.3 and 6.3 of the U.S. EPR PTLR. Section 3.3 states that the material surveillance program complies with Appendix H to 10 CFR Part 50 and ASTM E 185-82. The surveillance program description states that the capsule withdrawal schedule is outlined in Table 6-3, and each surveillance capsule will be tested in accordance with 10 CFR Part 50, Appendix H. The applicant also states that the material data will be evaluated using the guidance of RG 1.99, and the P-T limits will be recalculated or the applicable EFPY will be adjusted, as necessary, to confirm that the ART values of the P-T limits are not exceeded.

Table 1 of ASTM E 185-82 identifies the requirement for four capsules to be withdrawn for a maximum projected RT_{NDT} shift (ΔRT_{NDT}) of the beltline materials exceeding 100 °F. The staff reviewed the recommended surveillance capsule withdrawal schedule and determined that it in accordance with the specifications of ASTM E 185-82. On this basis, the NRC staff concluded that the provisions of PTLR Criterion 2 are satisfied. However, the NRC staff notes that all provisions of PTLR Criterion 2 will remain applicable to specific plants referencing the U.S. EPR standard plant design. As such, future U.S. EPR plants that incorporate the U.S. EPR PTLR will be expected to update their PTLRs in accordance with PTLR Criterion 2 as plant-specific surveillance capsule reports become available.

3.2.3 *PTLR Criterion 3*

PTLR Criterion 3 states that the LTOP System lift setting limits for the power-operated relief valves (PORVs) developed using NRC-approved methodologies may be included in the PTLR. The detailed methodology for developing the LTOP system limits is described in PTLR Section 5.0. The applicant has also provided the maximum pressure-safety-relief-valve (PSRV) lift setpoints and arming temperature for LTOP in PTLR Table 6-4.

The U.S. EPR LTOP mode of operation controls the reactor coolant system (RCS) pressure at low temperatures so that the integrity of the RCPB is not compromised by violating 10 CFR Part 50, Appendix G. The LTOP mode of operation for pressure relief of the U.S. EPR standard plant design consists of two PSRVs with each valve equipped with two solenoid-operated pilot valves in series that control the lifting of the PSRV. Although PTLR Criterion 3 addresses only PORVs that may be included in the PTLR, the PTLR may also include the LTOP capable PSRVs with lift settings which are equated to the solenoid-operated pilot valve activation setpoints. Furthermore, when the two LTOP-capable PSRVs are used during LTOP mode of operation, then the U.S. EPR TS LCO 3.4.11.d requires that the lift settings are within the limits specified in the PTLR. On this basis, the NRC staff concluded that the provisions of PTLR Criterion 3 have been satisfied.

The staff notes that U.S. EPR FSAR, Section 5.3.2 provides generic, not plant-specific, heatup and cooldown pressure-temperature curves. Therefore, a COL applicant that references the U.S. EPR design certification will provide a plant-specific PTLR, consistent with an approved methodology (U.S. EPR FSAR Tier 2, Table 1.8-2, "U.S. EPR Combined License Information Items," Item No. 5.3-2, action required by COL Holder). As described in U.S. EPR FSAR

Section 5.2.2.1, "Design Bases," for low-temperature operations, the set pressure for the PSRVs is established based on the low-temperature pressure limit for the reactor vessel with respect to ASME Code, Section XI, Appendix G, analyses. The pressure-temperature limits identified in ASME Code Section XI, Appendix G requires that the applicant's analytical results obtained are from an approved methodology equivalent to methods of analysis described in Appendix G and that the resulting limits are at least as conservative as limits obtained by following the methods of analysis and the margins of safety described in Appendix G. Furthermore, whenever the P-T limit curves are revised, the PSRV setpoint must be reevaluated to confirm the validity of the existing pressure setpoint or re-analyzed to determine a new pressure setpoint of the PSRV based on the revised P-T limit curves.

3.2.4 *PTLR Criterion 4*

10 CFR Part 50, Appendix G requires that the P-T limits for operating reactors be generated using a method that accounts for the effects of neutron embrittlement on the fracture toughness of RV beltline materials. For P-T limits, the effects of neutron embrittlement on the fracture toughness of RV beltline materials is defined in terms of the shift in the RT_{NDT} values resulting from neutron irradiation over a given period of facility operation, expressed in effective full-power years (EFPY). The final ART value for a material resulting from neutron embrittlement over a certain period of facility operation is defined as the sum of the initial (unirradiated) reference temperature (initial RT_{NDT}), the mean value of the shift in reference temperature caused by irradiation (ΔRT_{NDT}), and a margin term. RG 1.99, Revision 2 provides the NRC staff's recommended methodologies for calculating ART values used for P-T limit calculations. ΔRT_{NDT} is a product of a chemistry factor (CF) and a fluence factor. The CF is dependent upon the amount of copper and nickel in the material and may be determined from tables in RG 1.99, Revision 2 or from surveillance data. The fluence factor is dependent upon the neutron fluence at the maximum postulated flaw depth. The margin term is dependent upon whether the initial RT_{NDT} is a plant-specific or generic value and whether the CF was determined using the tables in RG 1.99, Revision 2 or surveillance data. The margin term is used to account for uncertainties in the values of the initial RT_{NDT}, the copper and nickel contents, the fluence, and the calculational procedures. Appendix G to Section XI of the ASME Code requires that licensees determine the ART at the 1/4T and 3/4T locations.

To ensure compliance with the requirements of 10 CFR Part 50, Appendix G, PTLR Criterion 4 states that PTLR contents should identify the limiting materials and limiting ART values at the 1/4T and 3/4T locations in the wall of the RV. To ensure compliance with the PTS requirements of 10 CFR 50.61, PTLR Criterion 4 also states that the PTLR contents should identify the limiting RT_{PTS} value for the RV. The methodology used to determine the ART values at the 1/4T and 3/4T locations is provided in Section 3.2 of the report. Tables 6-1, 6-2, and 6-5 of the EPR PTLR provide the inputs for the ART and RT_{PTS} calculations, including RV beltline material chemistry values, initial RT_{NDT} values, and peak RV-beltline neutron-fluence projections at 60 EFPY. However, the applicant did not clearly identify the limiting material used in the development of the P-T limits. Therefore, in RAI 05.03.02-10, the NRC staff requested that the applicant identify both the limiting adjusted reference temperature (ART) values and limiting materials at the 1/4T and 3/4T locations (T= vessel beltline thickness) used in the development of the P-T limits. In response to RAI 05.03.02-10, the applicant stated that the limiting materials were the circumferential seam weld (weld #2) and the shell forgings (upper and lower) and provided the ART values for each material. Based on the information provided in the PTLR, it

was unclear to the NRC staff how these materials would be used to develop a P-T limit curve that represents the EPR reactor vessel. Therefore, the NRC staff issued RAI 05.03.02-11 requesting the applicant to explain specifically how these materials would be used to develop the bounding P-T limit curves. The applicant responded that for normal heatup and inservice leak and hydrostatic heatup (ISLH) conditions, the pressure-temperature limits for the entire temperature range are controlled by the reactor vessel closure head as shown in Figure 6-1. The applicant also stated that for normal cooldown, different components are controlling during different temperature ranges. In the low-temperature range (50°F to 116°F) the closure head is the controlling component. From 116°F to 138°F, the upper/lower core shell is the controlling component. At temperatures above 138°F, the controlling component is weld #2.

The corresponding 60 EFPY ART values of the limiting materials at the 1/4T and 3/4T locations are shown in Table 6-2 of the U.S. EPR PTLR. The staff confirmed the applicant's controlling materials for heatup (closure head) and cooldown (closure head, upper/lower core shell, and weld #2) conditions and performed an independent calculation of the ART values for the beltline materials using the RG 1.99, Revision 2 methodology. On the basis of this evaluation, the NRC staff found that the applicant's response to RAI 05.03.02-11 was acceptable and confirmed that the U.S. EPR PTLR has been updated with the information provided. Therefore, RAI 05.03.02-10 and RAI 05.03-02-11 are closed. The staff also verified that the RT_{PTS} calculations, shown in Table 6-5 of the U.S. EPR PTLR, complied with the requirements of 10 CFR 50.61. The limiting RT_{PTS} value of 141.1 °F at 60 EFPY corresponds to weld #2.

As discussed above, the NRC staff verified that the ART calculations were consistent with RG 1.99, Revision 2 and the RT_{PTS} calculations met the requirements of 10 CFR 50.61. In addition, the applicant clearly identified the limiting materials and limiting ART values at the 1/4T and 3/4T locations, as well as the limiting RT_{PTS} value for the RV. Therefore, the NRC staff concluded that the provisions of PTLR Criterion 4 are satisfied.

3.2.5 *PTLR Criterion 5*

Section IV.A.2 of 10 CFR Part 50, Appendix G requires that the P-T limits for operating reactors and the minimum temperatures established for the stressed regions of RVs (i.e., for the RV flange and stud assemblies) be met for all conditions. The rule also requires that the P-T limits for operating reactors must be at least as conservative as those that would be generated if the methods of analysis in the ASME Code, Section XI, Appendix G were used to generate the P-T limit curves. Table 1 of 10 CFR Part 50, Appendix G provides a summary of the required criteria for generating the P-T limits for operating reactors.

To ensure that PTLRs are in compliance with the above requirements, PTLR Criterion 5 states that the PTLR contents should provide the P-T limit curves for heatup and cooldown operations, core critical operations, and pressure testing conditions for operating light-water reactors. The P-T limit curves for heatup and cooldown operations, core critical operations, and inservice leak and hydrostatic (ISLH) testing are provided in Figures 6-1 and 6-2. In response to RAI 05.03.02-7, the applicant provided the data points (pressure and temperature) corresponding to the P-T limit curves provided in the report. This meets the provisions of PTLR Criterion 5, which specifies that the PTLR include the P-T limit curves for reactor heatup, cooldown, critical operations, and pressure testing conditions.

The NRC staff performed independent analyses for the derivation of P-T limits curves and obtained almost identical solutions as those provided in the U.S. EPR PTLR for heat-up and cool-down operations, core critical operations, and hydrostatic and pressure testing; thus, providing verification of the P-T limits for the U.S. EPR standard plant design. Based on this independent verification, the NRC staff concluded that the applicant's proposed P-T limits were developed in accordance with ASME Code, Section XI, Appendix G and, therefore, satisfy the requirements of 10 CFR Part 50, Appendix G. Therefore, the applicant's proposed P-T limit curves are acceptable for operation of the EPR RV. On this basis, the NRC staff concluded that the provisions of PTLR Criterion 5 are satisfied.

3.2.6 *PTLR Criterion 6*

Section IV.A.2 of 10 CFR Part 50, Appendix G requires that the P-T limits for operating reactors and the minimum temperature requirements for the highly stressed regions of the RVs (i.e., for the RV flange and stud assemblies) be met for all conditions. Table 1 of 10 CFR Part 50, Appendix G provides required the criteria for meeting the minimum temperature requirements for the highly stressed regions of the RV.

PTLR Criterion 6 states that the minimum temperature requirements of 10 CFR Part 50, Appendix G shall be incorporated into the P-T limit curves, and the PTLR shall identify minimum temperatures on the P-T limit curves such as the minimum boltup temperature and the hydrotest temperature. The NRC staff concluded that the P-T limit curves met the minimum temperature requirements of 10 CFR Part 50, Appendix G. Furthermore, the PTLR clearly identifies the minimum boltup temperature and hydrotest temperature on the P-T limit curves. Therefore, the NRC staff concluded that the provisions of PTLR Criterion 6 are satisfied.

3.2.7 *PTLR Criterion 7*

RG 1.99, Revision 2 provides the staff's recommended methods for calculating the ART values for RV beltline materials. These ART values are calculated for the 1/4T and 3/4T locations in the vessel wall. The ASME Code, Section XI, Appendix G and 10 CFR Part 50, Appendix G requires that these values be used for the calculation of P-T limit curves for reactors.
10 CFR Part 50, Appendix G also requires that the ART values include the applicable results of the RV material surveillance program of 10 CFR Part 50, Appendix H. ART values for ferritic RV base metal and weld materials increase as a function of accumulated neutron fluence and the quantity of alloying elements in the materials; copper and nickel in particular. The procedures of RG 1.99, Revision 2 specify the use of a CF as a means for quantifying the effect of the alloying elements on the ART values. Furthermore, the RG specifies that a CF be calculated and inputted into the calculation of the final ART value for each beltline material. The RG cites two possible methods for determining the CF values for the RV beltline base metal and weld materials: (1) RG 1.99, Regulatory Position 1.1 allows the licensee to determine the CF values from applicable tables in the RG as a function of copper and nickel content or,
(2) Regulatory Position 2.1 allows the use of applicable RV surveillance data to determine the CF values if the base metal or weld materials are represented in a licensee's RV material surveillance program and if two or more credible surveillance data sets become available for the material in question. The criteria for determining the credibility of the RV surveillance data sets are defined in the RG. To satisfy the requirements of 10 CFR Part 50, Appendix G, the RG states that if the procedure of Regulatory Position 2.1 results in a higher ART value than that

given by using the procedure of Regulatory Position 1.1, the surveillance data should be used for determining the CF and ART. If the procedure of Regulatory Position 2.1 results in a lower value for the ART, either procedure may be used for determining the CF and ART.

To ensure that PTLRs comply with the above regulatory requirements and guidelines, PTLR Criterion 7 states that if surveillance data are used in the calculations of the ART values, the PTLR contents should include the surveillance data and calculations of the CF values for the RV base metal and weld materials, as well as an evaluation of the credibility of the surveillance data against the credibility criteria of RG 1.99, Revision 2. However, the U.S. EPR PTLR is generic for the U.S. EPR standard plant design and is based on bounding embrittlement correlations for which surveillance data is not yet available. Therefore, the incorporation of surveillance data and related calculations is currently not applicable to the U.S. EPR PTLR. As previously discussed, the CF and ART values in the PTLR were determined using the procedures of RG 1.99, Revision 2, Regulatory Position 1.1. On this basis, the NRC staff concluded that the provisions of PTLR Criterion 7 are satisfied. However, the NRC staff notes that the provisions of PTLR Criterion 7 will remain applicable to specific plants referencing the U.S. EPR design certification. As such, plants that incorporate the U.S. EPR PTLR will be expected to update their PTLRs in accordance with PTLR Criterion 7 as plant-specific surveillance data becomes available.

4.0 CONCLUSION

On the basis of its review, the NRC staff finds that the contents of the latest revision of the U.S. EPR PTLR, which incorporates the applicant's responses to the staff's RAIs, conform to the NRC staff's technical criteria for PTLRs as described in Attachment 1 of GL 96-03. The NRC staff also finds that the PTLR meets the requirements of 10 CFR Part 50, Appendix G. Furthermore, the NRC staff finds that the U.S. EPR PTLR is compatible with the U.S. EPR standard plant TSs, and the PTLR-related TS provisions meet the technical criteria of GL 96-03.

On the basis of this evaluation, the NRC staff concludes that the U.S. EPR PTLR (ANP-10283P, Revision 2) is acceptable for generic use by U.S. EPR COL applicants and licensees for establishing limiting P-T limit curves, LTOP system limits, and related input parameters. Pursuant to TS requirement 5.6.4c, future U.S. EPR COL licensees will be required to provide the PTLR to the NRC upon issuance for each reactor vessel fluence period and for any PTLR revision or supplement thereto. Finally, in accordance with GL 96-03, any subsequent changes in the methodology used to develop the P-T limits must be approved by the NRC.

AREVA

April 30, 2009
NRC:09:049

Document Control Desk
U.S. Nuclear Regulatory Commission
Washington, D.C. 20555-0001

ANP-10283P, Revision 1, "U.S. EPR Pressure-Temperature Limits Methodology for RCS Heatup and Cooldown Technical Report"

Ref. 1: E-mail, Ronda Pederson, et al (AREVA NP Inc.) to Getachew Tesfaye (NRC), "Response to U.S. EPR Design Certification Application RAI No. 64, Supplement 1," November 19, 2008.

In the response document provided in Reference 1, AREVA NP Inc. (AREVA NP) committed to provide a revision to ANP-10283P that includes the complete pressure-temperature limits methodology and contains a generic pressure-temperature limits report for the U.S. EPR™ design.

AREVA NP hereby submits ANP-10283P, Revision 1, "U.S. EPR Pressure-Temperature Limits Methodology for RCS Heatup and Cooldown Technical Report." The subject Technical Report provides the methodology for developing pressure-temperature limits for protecting the integrity of the U.S. EPR™ reactor coolant pressure boundary. The subject Technical Report also contains a generic pressure-temperature limits report for the U.S. EPR™ design based on bounding material properties.

AREVA NP considers some of the material contained in the enclosure to be proprietary. As required by 10 CFR 2.390(b), an affidavit is enclosed to support the withholding of the information from public disclosure. Proprietary and non-proprietary versions of the attachments are provided on the enclosed CDs.

If you have any questions related to this submittal, please contact me. I may be reached by telephone at 434-832-2369 or by e-mail at sandra.sloan@areva.com.

Sincerely,

for SMS

Ronda Pederson

Sandra M. Sloan, Manager
New Plants Regulatory Affairs
AREVA NP Inc.

Enclosures

cc: G. Tesfaye
Docket 52-020

AFFIDAVIT

COMMONWEALTH OF VIRGINIA)
) ss.
COUNTY OF CAMPBELL)

1. My name is Ronda Pederson. I am Licensing Manager, U.S. EPR Design Certification, Regulatory Affairs for New Plants, for AREVA NP Inc. and as such I am authorized to execute this Affidavit.

2. I am familiar with the criteria applied by AREVA NP to determine whether certain AREVA NP information is proprietary. I am familiar with the policies established by AREVA NP to ensure the proper application of these criteria.

3. I am familiar with the AREVA NP information contained in the enclosure to letter NRC:09:049, ANP-10283P, Rev. 1, "U.S. EPR Pressure-Temperature Limits Methodology for RCS Heatup and Cooldown," and referred to herein as "Document." Information contained in this Document has been classified by AREVA NP as proprietary in accordance with the policies established by AREVA NP for the control and protection of proprietary and confidential information.

4. This Document contains information of a proprietary and confidential nature and is of the type customarily held in confidence by AREVA NP and not made available to the public. Based on my experience, I am aware that other companies regard information of the kind contained in this Document as proprietary and confidential.

5. This Document has been made available to the U.S. Nuclear Regulatory Commission in confidence with the request that the information contained in this Document be withheld from public disclosure. The request for withholding of proprietary information is made in

accordance with 10 CFR 2.390. The information for which withholding from disclosure is requested qualifies under 10 CFR 2.390(a)(4) "Trade secrets and commercial or financial information".

6. The following criteria are customarily applied by AREVA NP to determine whether information should be classified as proprietary:

(a) The information reveals details of AREVA NP's research and development plans and programs or their results.

(b) Use of the information by a competitor would permit the competitor to significantly reduce its expenditures, in time or resources, to design, produce, or market a similar product or service.

(c) The information includes test data or analytical techniques concerning a process, methodology, or component, the application of which results in a competitive advantage for AREVA NP.

(d) The information reveals certain distinguishing aspects of a process, methodology, or component, the exclusive use of which provides a competitive advantage for AREVA NP in product optimization or marketability.

(e) The information is vital to a competitive advantage held by AREVA NP, would be helpful to competitors to AREVA NP, and would likely cause substantial harm to the competitive position of AREVA NP.

The information in the Document is considered proprietary for the reasons set forth in paragraphs 6(b) and 6(c) above.

7. In accordance with AREVA NP's policies governing the protection and control of information, proprietary information contained in this Document has been made available, on a limited basis, to others outside AREVA NP only as required and under suitable agreement providing for nondisclosure and limited use of the information.

8. AREVA NP policy requires that proprietary information be kept in a secured file or area and distributed on a need-to-know basis.

9. The foregoing statements are true and correct to the best of my knowledge, information, and belief.

SUBSCRIBED before me this 30th
day of April, 2009.

Kathleen A. Bennett
NOTARY PUBLIC, COMMONWEALTH OF VIRGINIA
MY COMMISSION EXPIRES: 8/31/2011

KATHLEEN ANN BENNETT
Notary Public
Commonwealth of Virginia
110044
My Commission Expires Aug 31, 2011

AREVA

April 13, 2012
NRC:12:021

Document Control Desk
U.S. Nuclear Regulatory Commission
Washington, D.C. 20555-0001

ANP-10283P, "U.S. EPR Pressure-Temperature Limits Methodology for RCS Heatup and Cooldown," Revision 2

Ref. 1: E-Mail, Dennis Williford (AREVA NP Inc.) to Getachew Tesfaye (NRC), "Response to U.S. EPR Design Certification Application RAI No. 531, Supplement 1," April 13, 2012.

In the response document provided in Reference 1, AREVA NP Inc. (AREVA NP) committed to submit a revision to technical report ANP-10283P. AREVA NP hereby submits ANP-10283P, "U.S. EPR Pressure-Temperature Limits Methodology for RCS Heatup and Cooldown," Revision 2. The section titled "Nature of Changes" identifies the revised sections of the report.

AREVA NP has incorporated this revised report by reference in the U.S. EPR Final Safety Analysis Report (FSAR). AREVA NP requests that the NRC incorporate the review of this revised report into the evaluation of the reactor pressure vessel design in the safety evaluation report for the U.S. EPR FSAR in a manner consistent with other reports which are incorporated by reference in the U.S. EPR FSAR.

AREVA NP considers some of the material contained in the enclosed technical report to be proprietary. As required by 10 CFR 2.390(b), an affidavit is enclosed to support the withholding of the information from public disclosure. Proprietary and non-proprietary versions of this technical report are also enclosed.

If you have any questions related to this information, please contact Darrell Gardner by telephone at (704) 805-2355 or by e-mail at darrell.gardner@areva.com.

Sincerely,

Pedro Salas
Director, Regulatory Affairs
AREVA NP Inc.

Enclosures

cc: G. Tesfaye
Docket 52-020

AREVA INC.
3315 Old Forest Road, P.O. Box 10935, Lynchburg, VA 24506-0935
Tel.: 434 832 3000 www.areva.com

AFFIDAVIT

NORTH CAROLINA)
) ss.
MECKLENBURG COUNTY)

1. My name is Gayle F. Elliott. I am Manager, Product Licensing, for AREVA NP Inc. (AREVA NP) and as such I am authorized to execute this Affidavit.

2. I am familiar with the criteria applied by AREVA NP to determine whether certain AREVA NP information is proprietary. I am familiar with the policies established by AREVA NP to ensure the proper application of these criteria.

3. I am familiar with the AREVA NP information contained in ANP-10283P, "U.S. EPR Pressure-Temperature Limits Methodology for RCS Heatup and Cooldown," Revision 2, and referred to herein as "Document." Information contained in this Document has been classified by AREVA NP as proprietary in accordance with the policies established by AREVA NP for the control and protection of proprietary and confidential information.

4. This Document contains information of a proprietary and confidential nature and is of the type customarily held in confidence by AREVA NP and not made available to the public. Based on my experience, I am aware that other companies regard information of the kind contained in this Document as proprietary and confidential.

5. This Document has been made available to the U.S. Nuclear Regulatory Commission in confidence with the request that the information contained in this Document be withheld from public disclosure. The request for withholding of proprietary information is made in accordance with 10 CFR 2.390. The information for which withholding from disclosure is

requested qualifies under 10 CFR 2.390(a)(4) "Trade secrets and commercial or financial information".

6. The following criteria are customarily applied by AREVA NP to determine whether information should be classified as proprietary:

(a) The information reveals details of AREVA NP's research and development plans and programs or their results.

(b) Use of the information by a competitor would permit the competitor to significantly reduce its expenditures, in time or resources, to design, produce, or market a similar product or service.

(c) The information includes test data or analytical techniques concerning a process, methodology, or component, the application of which results in a competitive advantage for AREVA NP.

(d) The information reveals certain distinguishing aspects of a process, methodology, or component, the exclusive use of which provides a competitive advantage for AREVA NP in product optimization or marketability.

(e) The information is vital to a competitive advantage held by AREVA NP, would be helpful to competitors to AREVA NP, and would likely cause substantial harm to the competitive position of AREVA NP.

The information in the Document is considered proprietary for the reasons set forth in paragraphs 6(b) and 6(c) above.

7. In accordance with AREVA NP's policies governing the protection and control of information, proprietary information contained in this Document has been made available, on a limited basis, to others outside AREVA NP only as required and under suitable agreement providing for nondisclosure and limited use of the information.

8. AREVA NP policy requires that proprietary information be kept in a secured file or area and distributed on a need-to-know basis.

9. The foregoing statements are true and correct to the best of my knowledge, information, and belief.

SUBSCRIBED before me this 13th

day of April, 2012.

Thomas A. Casias
NOTARY PUBLIC, NORTH CAROLINA, MECKLENBURG COUNTY
MY COMMISSION EXPIRES: 12/15/2014

AREVA

ANP-10283NP
Revision 2

U.S. EPR Pressure-Temperature Limits Methodology for RCS Heatup and Cooldown

Technical Report

April 2012

AREVA NP Inc.

ABSTRACT

This technical report provides the methodology for developing pressure-temperature (P-T) limits for protecting the integrity of the reactor coolant pressure boundary (RCPB) of the U.S. EPR. The methodology includes the applicable requirements of the ASME Boiler and Pressure Vessel (BPV) Code, Section XI, Appendix G (2004 Edition) and the requirements of 10 CFR 50, Appendix G. 10 CFR 50, Appendix G requires that P-T limits be established and that the P-T limits established are in compliance with the ASME BPV Code.

The components of the RCPB are designed to withstand the effects of cyclic loading due to system pressure and temperature changes during normal heatup and cooldown of the reactor coolant system and during anticipated operational occurrences. The P-T limits provide a margin of safety to preclude non-ductile failure of the RCPB during these operational transients.

This technical report also contains a generic pressure-temperature limits report (PTLR) for the U.S. EPR based on bounding material properties.

Nature of Changes

Revision	Section(s) or Page(s	Description and Justification
1	1.0	Added paragraph to note that this report also contains the generic PTLR for the U.S. EPR design.
	3.0	Moved specific material properties to Section 6.0 (generic PTLR).
	3.1	Added description of neutron fluence method per GL96-03.
	3.2	Expanded description of ART calculation method per GL 96-03.
	3.3	Described the material surveillance program per GL96-03.
	4.0	Moved LTOP enable temperature discussion to Section 5.4.
	5.1 – 5.3	New section - Added LTOP setpoint methodology per GL96-03 throughout 5.0 sections.
	5.4	Added justification for LTOP enable temperature basis.
	6.1 – 6.5	New section - Added Generic PTLR for the U.S. EPR design satisfying GL96-03 content requirements throughout 6.0 sections.
	ALL	Editorial changes throughout
2	6.0	Revised Figure 6–1 to correct an error in the criticality limit and clarify the controlling document.
	6.0	New tables – Added Tables 6–6 and 6–7 to tabulate the data points for Figures 6–1 and 6–2, respectively.
	6.0	Revise Table 6–2 to reflect the limiting ART values and limiting materials.
	6.0	Added footnotes to Figures 6–1 and 6–2 to clarify the use of both materials to develop the bounding P-T limit curves provided in the U.S. EPR PTLR.
	6.2.1	Revised section to clarify the use of both materials to develop the bounding P-T limit curves provided in the U.S. EPR PTLR.

Contents

List of Tables

List of Figures

Nomenclature

Acronym	Definition
AOO	Anticipated Operational Occurrence
ART	Adjusted Reference Temperature
CF	Chemistry factor
CFR	Code of Federal Regulations
EFPY	Effective Full Power Year
FF	Fluence factor
IRT_{NDT}	Initial Reference Temperature for Nil-Ductility Transition
ISI	Inservice Inspection
ISLH	Inservice Leak and Hydrostatic
K_{IR}	Crack Arrest Critical Stress Intensity Factor
K_{Ia}	Crack Arrest Critical Stress Intensity Factor
K_{Ic}	Critical or Reference Stress Intensity Factor
LCO	Limiting Condition for Operation (Technical Specifications)
LTOP	Low-Temperature Overpressure Protection
NDE	Non-Destructive Examination
PSRV	Pressurizer Safety Relief Valve
P-T	Pressure-Temperature
PTLR	Pressure-Temperature Limits Report
RCPB	Reactor Coolant Pressure Boundary
RCS	Reactor Coolant System
RG	Regulatory Guide
RPV	Reactor Pressure Vessel
RT_{NDT}	Reference Temperature for Nil-Ductility Transition
WRCB	Welding Research Council Bulletin

1.0 INTRODUCTION

This document presents the methodology for developing pressure-temperature (P-T) limits for the reactor coolant pressure boundary (RCPB) of the U.S. EPR. This technical report is based on the methodologies of the ASME BPV Code, Section XI, Appendix G (Reference 1) and 10 CFR Part 50, Appendix G, Fracture Toughness Requirements (Reference 2).

The reactor pressure vessel (RPV) beltline materials used in the U.S. EPR satisfy Charpy upper-shelf energy requirements throughout the 60-year life of the vessel; therefore, this report does not address low upper-shelf toughness issues.

The components of the RCPB are designed to withstand the effects of cyclic loads due to system pressure and temperature changes. These loads are introduced by startup (i.e., heatup) and shutdown (i.e., cooldown) operations, and operational transients. Because of inherent conservatism in the methodology, the P-T limits provide a margin of safety to preclude non-ductile failure of the RCPB during changes in pressure and temperature. Due to neutron irradiation over the plant lifetime, the RPV is the component most subject to non-ductile failure. The P-T limit methodology described herein applies to the limiting components of the RPV.

This technical report also contains a generic pressure-temperature limits report (PTLR) for the U.S. EPR based on bounding material properties.

2.0 FRACTURE TOUGHNESS REQUIREMENTS

2.1 Background

The NRC has established fracture toughness requirements for ferritic materials in pressure-retaining components of the RCPB to provide adequate margins of safety over its service lifetime. 10 CFR 50.60, Acceptance Criteria for Fracture Prevention Measures for Light Water Nuclear Power Reactors for Normal Operation (Reference 3) requires compliance with the fracture toughness requirements set forth in 10 CFR Part 50, Appendix G which additionally requires compliance with Reference 1. These fracture toughness requirements, including P-T limits, apply during inservice leak and hydrostatic (ISLH) testing and any condition of normal operation, including anticipated operational occurrences (AOO). Compliance with these requirements protects the structural integrity of the RCPB, specifically the RPV. The regulations in 10 CFR 50.60 and the associated 10 CFR Part 50, Appendix G provide the general basis for these limits.

10 CFR Part 50, Appendix G requires that P-T limits be at least as conservative as the limits obtained by following Reference 1. The U.S. EPR complies with the 10 CFR Part 50, Appendix G requirement to develop P-T limits in accordance with the specifications of Reference 1.

2.2 *P-T Limits and Minimum Temperature Requirements*

P-T limits are prescribed to avoid encountering pressure, temperature and temperature rate of change conditions that might cause undetected flaws to propagate and cause non-ductile failure of the RCPB. The P-T limits and minimum temperature requirements are derived from 10 CFR Part 50, Appendix G and Reference 1.

2.2.1 *10 CFR Part 50, Appendix G*

10 CFR Part 50, Appendix G Section IV Paragraphs A.2.a, b, c, and d specify the following P-T and minimum temperature requirements: (Note: A typographical error in Section IV Paragraphs A.2.a, b and c is corrected from "Table 3" to "Table 1.")

a. "Pressure-temperature limits and minimum temperature requirements for the reactor vessel are given in Table 1, and are defined by the operating condition (i.e., hydrostatic pressure and leak tests, or normal operation including anticipated operational occurrences), the vessel pressure, whether or not fuel is in the vessel, and whether the core is critical. In Table 1, the vessel pressure is defined as a percentage of the preservice system hydrostatic test pressure. The appropriate requirements on both the pressure-temperature limits and the minimum permissible temperature must be met for all conditions.

b. The pressure-temperature limits identified as "ASME Appendix G limits" in Table 1 require that the limits must be at least as conservative as limits obtained by following the methods of analysis and the margins of safety of Appendix G of Section XI of the ASME Code.

c. The minimum temperature requirements given in Table 1 pertain to the controlling material, which is either the material in the closure flange or the material in the beltline region with the highest reference temperature. As specified in Table 1, the minimum temperature requirements and the controlling material depend on the operating condition (i.e., hydrostatic pressure and leak tests, or normal operation including anticipated operational occurrences), the vessel pressure, whether fuel is in the vessel, and whether the core is critical. The metal temperature of the controlling material, in the region of the controlling material which has the least favorable combination of stress and temperature, must exceed the appropriate minimum temperature requirement for the condition and pressure of the vessel specified in Table 1.

d. Pressure tests and leak tests of the reactor vessel that are required by Section XI of the ASME Code must be completed before the core is critical."

The minimum temperature requirements for the material reference temperature for nil-ductility transition (RT_{NDT}) in Table 1, "Pressure and Temperature Requirements for the Reactor Pressure Vessel," of 10 CFR Part 50, Appendix G (included as Table 2–1 in this report), are partially based on ASME BPV Code Section III, NB-2300 (Reference 4) and are incorporated in the development of the P-T limit curves.

2.2.2 *ASME Code*

In 1987, Reference 1 adopted the requirements of ASME BPV Code Section III, Appendix G (Reference 5), except for the name of the fracture toughness curve, K_{IR}, which was labeled as K_{Ia}. This was done for consistency with the corresponding curve in Section XI of the ASME Code which is labeled as K_{Ia}. This was also done to place the nuclear power plant operational requirements in Reference 1 rather than in Reference 5. Section III addresses design and construction of nuclear power plants and has no provision for the effects of neutron irradiation on RPV beltline materials. If neutron fluence levels are greater than anticipated during the service lifetime of RCPB components, the P-T limits are re-evaluated to account for the potential degradation in material toughness.

The methodology of Reference 1 postulates the pre-existence of certain surface flaws in the limiting components of the RPV. The Reference 1 methods are described in Section 4.0 of this Technical Report.

2.2.3 *Limiting Components*

The components of the RCPB are designed to withstand the effects of cyclic loads due to system pressure and temperature changes. The P-T limits establish operating limits that provide a margin to preclude non-ductile failure of the RPV and piping of the RCPB. For P-T limits, the closure head, outlet nozzle and beltline region are the three components analyzed.

The RPV is a vertically mounted cylindrical vessel consisting of forged shells, a transition ring, nozzles, and heads. There are no longitudinal seam welds. The welds in the RPV beltline region are shown on Figure 2-1.

Due to neutron radiation induced embrittlement, the beltline region of the reactor vessel is the most critical component. The closure head is important in the development of P-T limits due to preoperational bolt-up stress and the minimum temperature requirements in Table 2–1. RPV nozzles are analyzed with a postulated nozzle corner crack as

described in Welding Research Council Bulletin (WRCB) 175 (Reference 6). Other RCPB components are considered bounded by these three analyzed components.

Table 2–1 Pressure and Temperature Requirements for the Reactor Pressure Vessel

Operating Condition	Vessel Pressure(1)	Requirements for Pressure-Temperature Limits	Minimum Temperature Requirements
1. Hydrostatic pressure and leak tests (core is not critical):			
1.a Fuel in the vessel	≤ 20%	ASME Appendix G Limits	(2)
1.b Fuel in the vessel	> 20%	ASME Appendix G Limits	(2) + 90°F (6)
1.c No fuel in the vessel, (Preservice Hydrotest Only)	ALL	(Not Applicable)	(3) + 60°F
2. Normal operation (incl. heat-up and cool-down), including anticipated operational occurrences (AOOs):			
2.a Core not critical	≤ 20%	ASME Appendix G Limits	(2)
2.b Core not critical	> 20%	ASME Appendix G Limits	(2) + 120°F (6)
2.c Core critical	≤ 20%	ASME Appendix G Limits + 40°F	Larger of [(4)] or [(2) + 40°F]
2.d Core critical	> 20%	ASME Appendix G Limits + 40°F	Larger of [(4)]or [(2)+160°F]
2.e Core critical for BWR(5)	≤ 20%	ASME Appendix G Limits + 40°F	(2) + 60°F

Notes:

1. Percent of the preservice system hydrostatic test pressure.
2. The highest reference temperature of the material in the closure flange region that is highly stressed by the bolt preload.
3. The highest reference temperature of the vessel.
4. The minimum permissible temperature for the inservice system hydrostatic pressure test.
5. For boiling water reactors (BWR) with water level within the normal range for power operation.
6. Lower temperatures are permissible if they can be justified by showing that the margins of safety of the controlling region are equivalent to those required for the beltline when it is controlling.

Figure 2–1 RPV Beltline Welds

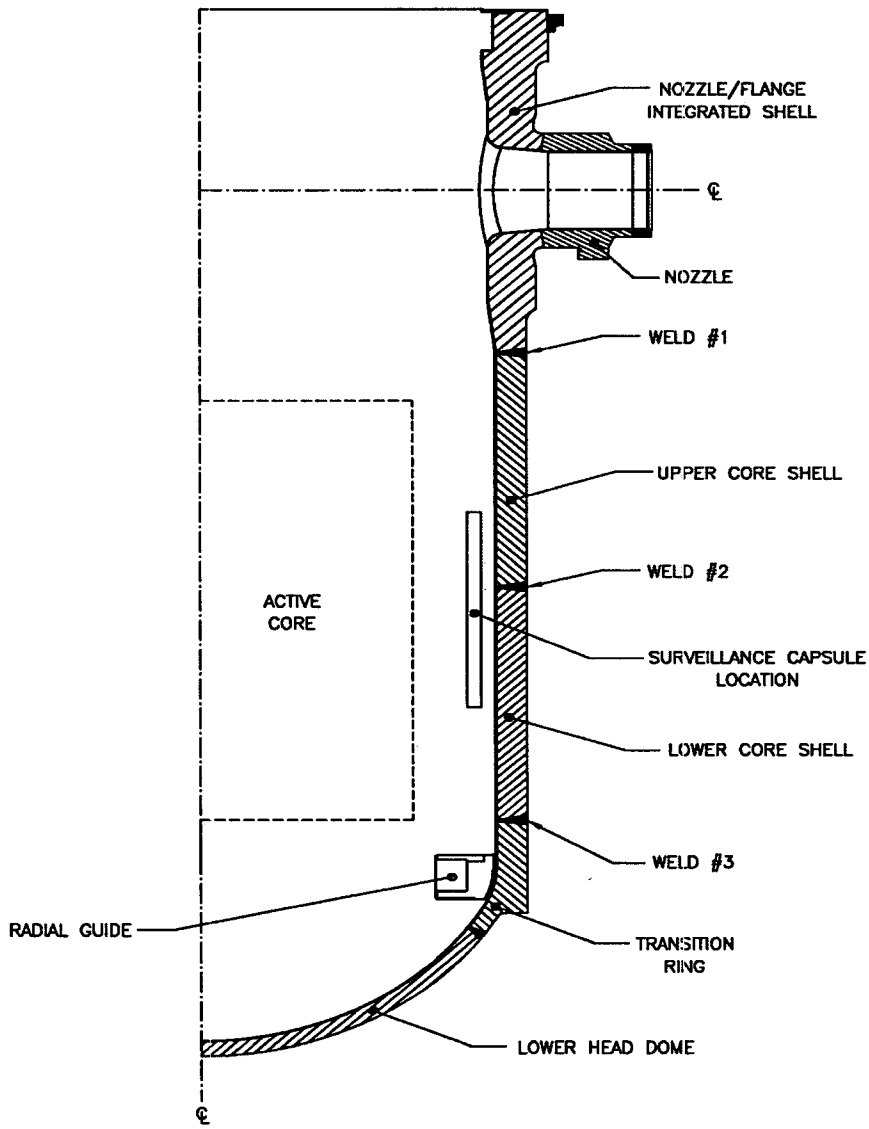

3.0 MATERIAL PROPERTIES

3.1 *Neutron Fluence Methodology*

The methodology for determining the projected RPV neutron fluences used in the adjusted reference temperature calculation is defined in BAW-2241P-A, Fluence and Uncertainty Methodologies (Reference 12). The methodology in Reference 12 conforms to the guidance of Regulatory Guide 1.190 (Reference 13).

The U.S. EPR heavy reflector significantly reduces the neutron flux (E > 1 MeV) on the RPV. The reduction in RPV fluence due to the heavy reflector has been determined by applying the methodology in Reference 12 and replacing the heavy reflector with downcomer water in the discrete ordinates transport code (DORT) model. A comparative evaluation was performed using Monte Carlo N-Particle Transport Code (MCNP) and demonstrates a comparable reduction in neutron flux. The comparative evaluation confirms the fluence projections.

Measured data from the material surveillance program described in Section 3.3 will supplement the calculated fluence predictions. The surveillance capsule withdrawal schedule and capsule lead factors allow indication of neutron irradiation in advance of vessel irradiation damage.

3.2 *Calculation of Adjusted Reference Temperature*

The adjusted reference temperature (ART) for each material in the RPV beltline is calculated in accordance with RG 1.99, Revision 2 (Reference 7) according to the following expression:

$$ART = \text{Initial } RT_{NDT} + \Delta RT_{NDT} + \text{Margin} \quad (3\text{-}1)$$

The limiting ART values are used to derive the required minimum temperatures and the fracture toughness K_{Ic} curve in Reference 1.

3.2.1 *Initial RT_{NDT}*

The initial RT_{NDT} is the reference temperature for the RPV beltline material in the unirradiated condition, evaluated in accordance with ASME Boiler and Pressure Vessel Code, Section III, Paragraph NB-2331 (Reference 4). If measured values of initial RT_{NDT} for the material in question are not available, generic mean values for that class of material may be used if there are test results to establish a mean and standard deviation for the class.

3.2.2 *Reference Temperature Adjustment (ΔRT_{NDT})*

ΔRT_{NDT} is the mean value of the adjustment in reference temperature caused by irradiation and is calculated using the following expression:

$$\Delta RT_{NDT} = (CF) * (FF) \quad (3\text{-}2)$$

Where CF is the chemistry factor and FF is the fluence factor.

The chemistry factor (CF) is determined from the copper and nickel content for each RPV beltline region material using Table 1 (for weld metals) and Table 2 (for base metals) of Reference 7. Linear interpolation is permitted. When determining the CF, the "weight percent copper" and "weight-percent nickel" are best estimate values for the material.

The fluence factor (FF) is determined as follows in accordance with Reference 7:

$$FF = f^{(0.28 - 0.10 \log f)} \quad (3\text{-}3)$$

Where f = neutron fluence (10^{19} n/cm^2, E > 1 MeV). The neutron fluence at any depth in the RPV wall is determined in accordance with Reference 7 as follows:

$$f = f_{surf} (e^{-0.24x}) \quad (3\text{-}4)$$

where f_{surf} (10^{19} n/cm^2, E > 1 MeV) is the calculated value of the neutron fluence at the inner wetted surface of the vessel, and x (inches) is the depth into the vessel wall measured from the vessel inside (wetted) surface.

To verify that the ART for each vessel beltline material is a bounding value for the RPV, plant-specific information shall be considered when available. This information includes, but is not limited to, the reactor vessel operating temperature and surveillance program results. The results from the plant-specific surveillance program must be integrated into the ART estimate if the plant-specific surveillance data have been deemed credible as judged by the following criteria:

- The materials in the surveillance capsules must be representative of those that are controlling with regard to radiation embrittlement.
- Scatter in the plots of Charpy energy versus temperature for the irradiated and unirradiated conditions must be small enough to permit the determination of the 30 ft-lb temperature unambiguously.
- Where there are two or more sets of surveillance data from one reactor, the scatter of ΔRT_{NDT} values must be less than 28°F for welds and 17°F for base metals. Even if the range in the capsule fluences is large (i.e., two or more orders of magnitude), the scatter may not exceed twice those values.
- The irradiation temperature of the Charpy specimens in the capsule must equal the vessel wall temperature at the cladding/base metal interface within ±25°F.
- The surveillance data for the correlation monitor material in the capsule, if present, must fall within the scatter band of the database for the material.

The surveillance data that are deemed credible must be used to determine a material-specific value of CF for use in Equation 3-2. The material-specific value of CF is determined from the following equation:

$$CF = \frac{\sum_{i=1}^{n}[A_i \times FF_i]}{\sum_{i=1}^{n} FF_i^2} \tag{3-5}$$

Where n is the number of surveillance data points, A_i is the measured value of ΔRT_{NDT} adjusted to account for known differences in chemical composition and irradiation temperature between the capsules and the vessel, and FF_i is the fluence factor for each surveillance data point.

3.2.3 *Margin*

The margin is the quantity that is added to obtain conservative, upper-bound values of the ART for use in calculations required by Appendix G to 10 CFR Part 50. The margin is determined by the following expression:

$$\text{Margin} = 2\sqrt{\sigma_I^2 + \sigma_\Delta^2} \tag{3-6}$$

Here, σ_I is the standard deviation for the initial RT_{NDT} and σ_Δ is the standard deviation for ΔRT_{NDT}. If a measured value of the initial RT_{NDT} for the material in question is available, σ_I is to be estimated from the precision of the test method. If generic mean values are used, σ_I is the standard deviation obtained from the set of data used to establish the mean.

The standard deviation for ΔRT_{NDT}, σ_Δ, is 28°F for welds and 17°F for base metals, except that σ_Δ need not exceed 0.5 times ΔRT_{NDT}. For cases in which the results from a credible plant-specific surveillance program are used, the value of σ_Δ to be used is 14°F for welds and 8.5°F for base metals; the value of σ_Δ need not exceed 0.5 times ΔRT_{NDT}.

3.3 *U.S. EPR RPV Material Surveillance Program*

The U.S. EPR RPV material surveillance program monitors changes in the mechanical properties of the ferritic steel in the RPV beltline region due to the thermal and

irradiation environment. The material surveillance program complies with Appendix H to 10 CFR Part 50 and ASTM E 185-82 (Reference 14).

The material surveillance program uses four specimen capsules containing representative RPV material samples, neutron dosimeters, and temperature monitors. The number of capsules meets the minimum requirements of both ASTM E 185-02 (Reference 15) and ASTM E 185-82. All four capsules contain the same type and number of mechanical test specimens, neutron dosimeters, and temperature monitors. The capsules are located one on either side of the 7° and 187° locations, measured from the main axis of the vessel, and are attached to the outside of the core barrel in the downcomer region at the mid-elevation of the reactor core.

The RPV materials selected for the material surveillance program are those that are adjacent to the active core. Using the maximum initial RT_{NDT} values, maximum nickel and copper contents allowed in the RPV and a 60 effective full power year (EFPY) fluence, the limiting RPV beltline material for the U.S. EPR is predicted to be the upper core shell to lower core shell weld. This prediction is made in accordance with 10 CFR 50.61. Based on the predictions of the most susceptible materials and on the requirements of ASTM E185-82 and ASTM E185-02, the following materials are included in the material surveillance program:

- Upper to lower core shell weld (Weld #2).
- Lower core shell to transition ring weld (Weld #3), if different from Weld #2.
- Upper core shell forging.
- Lower core shell forging.
- Heat affected zone (HAZ) from a core shell forging and RPV Weld #2.

For each of the beltline materials selected, Charpy V-notch, tension, and compact fracture (CT) specimens are included, except for the HAZ for which only Charpy V-notch specimens are required.

In addition to the four capsules that are assembled for irradiation, surplus material sufficient to fabricate four additional capsules is archived. The total material quantity complies with the minimum requirements of both ASTM E185-82 and ASTM E185-02.

4.0 ANALYTICAL METHODS FOR DETERMINING P-T LIMITS

4.1 *Pressure Boundary Components*

P-T limits are established for the limiting RCPB components as described in Section 2.2.3.

4.2 *Maximum Postulated Defects*

4.2.1 *Beltline Region of Reactor Vessel*

The methods of Reference 1 postulate the existence of a sharp surface flaw in the RPV that is normal to the direction of the maximum stress. This flaw is postulated to have a depth that is equal to one-quarter of the RPV beltline thickness (1/4t), and a length equal to 1.5 times the RPV beltline thickness, as shown in Figure 4-1. In Reference 1, there is no requirement as to which surface (inside or outside) on which to postulate the defect. In application, the defect is postulated on both internal and external surfaces of reactor vessels (1/4t and 3/4t locations, respectively), even though there is no water environment and no known causes for crack initiation or propagation on the external surface of reactor vessels.

For circumferential seam welds in the RPV, 1/4t defect is postulated in the circumferential direction as shown in Figure 4-2.

4.2.2 *Closure Head*

The reactor closure head is subjected to high stresses due to bolt preload-induced bending and internal pressure. Because the bolt stresses induce tensile bending stresses on the external surface, an external surface defect is postulated. According to Article G-2120 of Reference 1, a flaw size less than 1/4t may be postulated on an individual case basis. [

] Considering the ability to detect a flaw that is a fraction of this size during periodic inspection of this region, postulation of this size defect is

conservative. Because the [ ] location from the outside is insensitive to the inside downcomer reactor coolant temperature, the closure head limit is controlled by heatup rates. This limit bounds the cooldown limit of the closure head.

4.2.3 *Inlet and Outlet Nozzle*

As allowed by Article G-2120 of Reference 1, a flaw with a depth of one inch is postulated in the corners of inlet and outlet nozzles. This assumption is based on past inservice inspection (ISI) results of nozzle corner radius regions in pressurized water reactors in the U.S., which have not shown any reportable indications. In addition, the reliability of defect detection and sizing capability demonstrated for nozzle corner regions has significantly improved since the performance demonstration initiative (PDI) program in 1994 (Reference 8). NRC regulations in 10 CFR 50.55a Codes and Standards (Reference 9) impose requirements for ISI.

Figure 5 of Reference 8 illustrates the probability of detecting and rejecting a flaw, 0.25-inch into the base metal, is equal to or greater than 90 percent and the probability of detecting and rejecting a flaw 0.5-inch or greater into the base material is 100 percent. Also, because the nozzle region does not have much exposure to neutron radiation compared with the beltline region, the limit curves for inlet and outlet nozzles do not change with increasing operating time.

4.3 *Fracture Toughness of Reactor Vessel Steels*

Reference 1 requires the critical stress intensity factor K_{Ic}, defined by equation 4-1, be used in P-T limit calculations. (Terms and units are further defined in Reference 1.)

$$K_{Ic} = 33.2 + 20.734 \exp[0.02(T - RT_{NDT})] \quad (4\text{-}1)$$

Where:

K_{Ic} = critical stress intensity factor

T = temperature

RT_{NDT} = reference temperature for nil-ductility transition

4.4 *Transient Temperature and Thermal Stress Calculation*

The following analytical processes are used in the determination of the allowable pressures for the generation of P-T limits.

The temperature profile through the reactor vessel wall is determined by solving the one-dimensional axisymmetric heat conduction equation:

$$\rho C_p \frac{\partial T}{\partial t} = k\left(\frac{\partial^2 T}{\partial r^2} + \frac{1}{r}\frac{\partial T}{\partial r}\right) \tag{4-2}$$

The equation is subjected to boundary conditions at the inside and the outside walls of the reactor vessel:

At the inside wall where $r = R_i$,

$$-k\frac{\partial T}{\partial r} = h(T_w - T_b)$$

At the outside wall where $r = R_o$,

$$\frac{\partial T}{\partial r} = 0$$

Where:

ρ = density

C_p = specific heat

k = thermal conductivity

T = vessel wall temperature

r = radius

t = time

h = convective heat transfer coefficient

T_w = wall temperature

T_b = bulk coolant temperature

R_i = inside radius of vessel wall

R_o = outside radius of vessel wall

Equation 4-2 is solved numerically using a finite difference or finite element method to determine the wall temperature as a function of radius, time and thermal transient rate. The temperature profile through the reactor vessel wall at a particular time allows determination of the corresponding thermal stresses from the theory of elasticity or a finite element model in the radial, or through-thickness, direction. This numerical procedure is particularly important for multi-rate heatup and cooldown cases.

4.5 *Stress Intensity Factors, K_I*

The use of any particular stress intensity factor solution presented in this document or in Reference 1 is allowed, because the resulting K_I values are appropriate. The choice of K_I equation usually depends on the form of stress profiles used in the solution. The applicable K_I equations include those provided in Reference 1 and are not repeated in this report. These terms and units are further defined in the references and are expressed in U.S. customary units.

4.5.1 *Longitudinal Semielliptical Surface Flaws*

The stress intensity factor equation for a longitudinal semielliptical surface flaw [

] is considered well suited for the development of P-T limits because the solution is for a cylinder, not for a plate. The solution is based on the finite element analysis of cylinders with radius to thickness ratios of [

]

)

[ ]

Only the stress intensity factors defined in this document or in Reference 1 are used for the U.S. EPR.

4.5.2 *Circumferential Semielliptical Surface Flaws*

The K_I solution for a circumferential flaw shown is from [ ]

[ ]

Only the stress intensity factors defined in this document or in Reference 1 are used for the U.S. EPR.

4.5.3 *Nozzle Corner Semielliptical Surface Flaw*

The determination of the stress intensity factor for a nozzle corner crack is based on the method contained in Reference 6, which gives the following equation:

$$K_I = \sigma\sqrt{\pi a}F(a/r_n) \tag{4-11}$$

Where: $F = 2.5 - 6.108(a/r_n) + 12\,(a/r_n)^2 - 9.1664\,(a/r_n)^3$

σ = hoop stress

a = crack depth

r_n = apparent radius of nozzle, in which is given by the equation,

$r_n = r_i + 0.29r_c$

r_i = actual inner radius of nozzle

r_c = nozzle radius

The membrane stress is the hoop stress due to pressure and is determined using Lame's solution for thick wall cylinders subjected to internal pressure. The maximum hoop stress is developed at the inside surface of the wall and is given by:

$$\sigma = p\,\frac{R_o^2 + R_i^2}{R_o^2 - R_i^2} \tag{4-12}$$

The maximum hoop stress at the inside surface is conservatively assumed as a uniform membrane stress across the entire wall thickness.

4.6 *Determination of Appendix G Limits*

The governing equation for determining the pressure-temperature operating limit curves is Equation 1 from Article G-2215 of Reference 1:

$$(S.F.)\ K_{Im} + K_{It} \leq K_{Ic} \tag{4-13}$$

Where: S.F. = safety factor

= 2 for normal and upset conditions

= 1.5 for ISLH testing

K_{Im} = stress intensity factor due to internal pressure

K_{It} = stress intensity factor due to thermal gradient

K_{Ic} = reference stress intensity factor defined in Equation 4-1

For a thermal transient analysis, a temperature profile is calculated for a given point in time during a heatup or cooldown transient. K_{Ic} is determined from the crack-tip temperature, T, and the material RT_{NDT} at a given location. RT_{NDT} is determined in accordance with Section 3.2 based on the neutron fluence and chemical composition of the material. The temperature profile (thermal gradient) determines the thermal stresses at various points throughout the reactor vessel wall. If the stress intensity factor is defined as for a pressure of one psi, $\overline{K}_{Ip}$, the allowable pressure is determined using the following equation:

$$P_{allow} = \frac{K_{Ic} - K_{It}(T_f)}{(S.F.) \cdot \overline{K}_{Ip}} \tag{4-14}$$

Where:

T_f = fluid temperature

$\overline{K}_{Ip}$ = unit pressure stress intensity factor (due to 1 psig)

A plot showing the allowable pressure as a function of bulk coolant temperature is a P-T limit curve. The same procedure applies to the ISLH testing except the safety factor is 1.5, instead of 2.0.

4.7 *Minimum Bolt Preload Temperature*

In accordance with the requirements of 10 CFR Part 50, Appendix G, Table 1, item 2(a), the minimum bolt preload temperature is equal to the highest reference temperature of the material in the closure flange region that is highly stressed by the bolt preload. For the U.S. EPR, the minimum bolt preload temperature ≥ 50°F. Therefore, the minimum bolt preload temperature should be 50°F or the highest reference temperature of the closure flange region, whichever is greater.

4.8 *Criticality Limit Temperature and Criticality Limit Curve Determination*

The criticality limit temperature is obtained by determining the minimum permissible temperature from the controlling P-T limits for ISLH heatup or cooldown at a pressure of 2500 psig (approximately 10 percent above the normal full-power operating pressure). The ISLH analysis conservatively considers the most limiting heatup and cooldown transients. The minimum permissible ISLH test temperature at 2500 psig is compared to RT_{NDT} +160°F. The larger temperature between these two becomes the criticality limit temperature. Item 2.d in Table 2-1 specifies that the criticality limit curve is the criticality limit temperature or the Appendix G limit curve shifted by 40°F, whichever is greater.

Figure 4–1 Postulated Longitudinal Flaw in Reactor Vessel

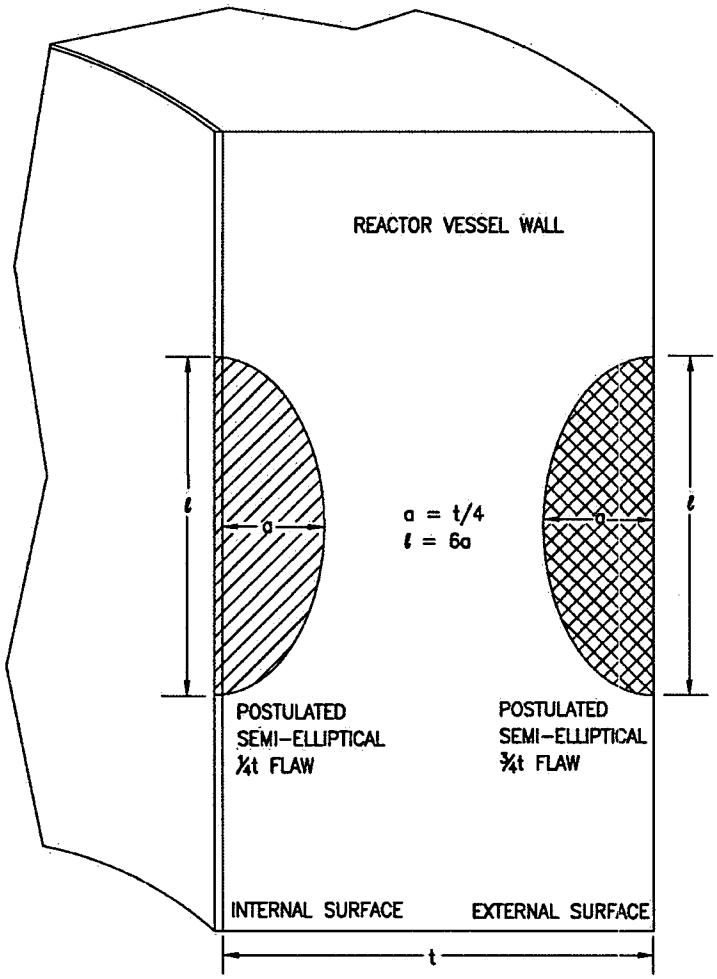

NOTES:
1. POSTULATED FLAWS ON THE VERTICAL PLANE OF THE REACTOR VESSEL BELTLINE WALL
2. DRAWING NOT TO SCALE

Figure 4–2 Circumferential Weld in Reactor Vessel Wall

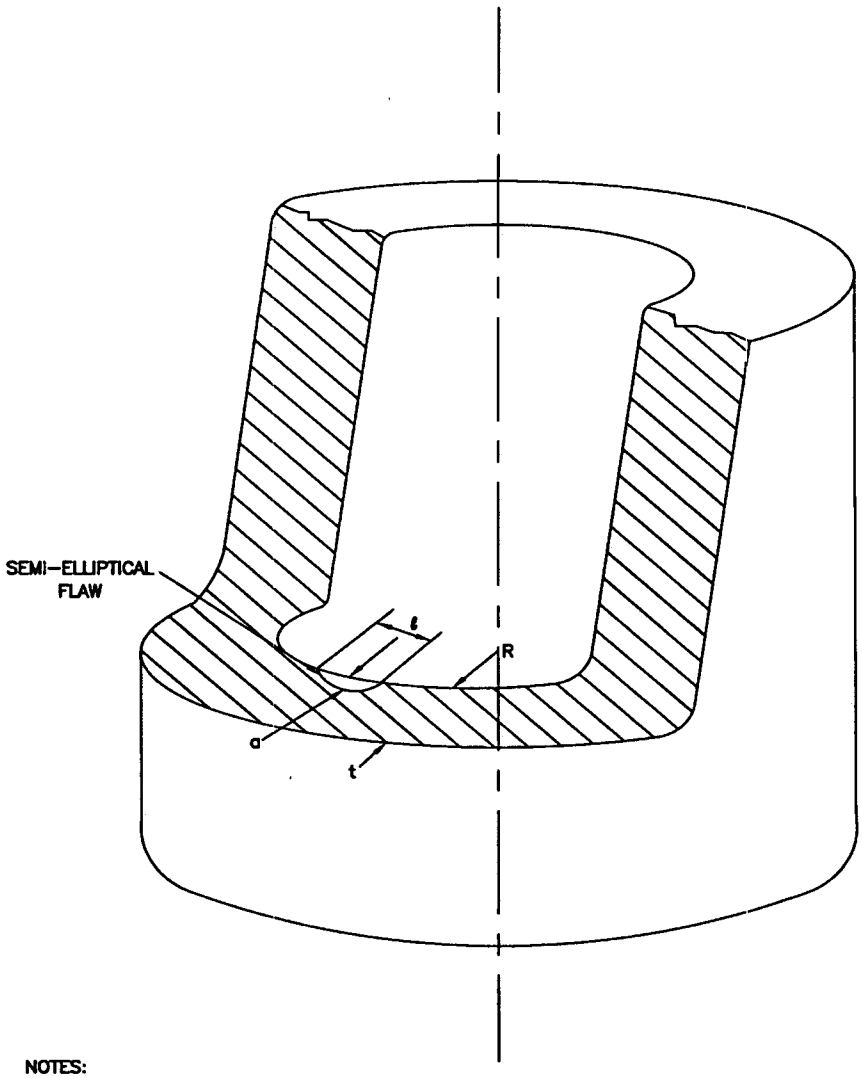

NOTES:
1. POSTULATED FLAWS ON THE HORIZONTAL PLANE OF THE REACTOR VESSEL BELTLINE WALL
2. DRAWING NOT TO SCALE
3. $a = t/4$; $\ell = 6a$

4–2

5.0 LOW TEMPERATURE OVERPRESSURE PROTECTION

5.1 *Low Temperature Overpressure Protection Features*

The U.S. EPR low temperature overpressure protection (LTOP) features are designed to provide the capability, during reactor operation at low temperature conditions, to automatically prevent the RCS pressure from exceeding the applicable limits established by 10 CFR Part 50, Appendix G. Two pressurizer safety relief valves (PSRV) open automatically in response to RCS pressure to provide the required relief capability. The reactor operator manually validates a permissive to enable LTOP based on the LTOP enable temperature requirement addressed in Section 5.4.

5.2 *Analytical Methodology*

The LTOP analyses consider all potential overpressure events to establish the limiting events. Potential events may be excluded from the LTOP analyses if the controls to prevent the events are in the plant Technical Specifications.

LTOP events are categorized into mass input and heat input events. Two mass input events – start of four MHSI pumps, and both charging pumps running with the control valve failed open – and one heat input event – startup of an RCP with the secondary side temperature 50°F hotter than the primary side temperature – were identified as the limiting events for analysis.

The LTOP transient analysis is performed using RELAP5/MOD2-B&W (Reference 16). The analyses assume the most limiting single active failure, in addition to the initiating event, and assume the most limiting allowable operating conditions and system configurations at the time of the postulated cause of the overpressure event. Assumed initial conditions and system configurations include:

- Water solid RCS.
- Isolated volume control system letdown.

- Maximum allowable initial RCS pressure.
- Range of initial RCS temperatures from the allowable minimum to the LTOP enable temperature.
- Maximum flow input (mass input events).
- Maximum heat input (heat input events).

Specified pressure instrument uncertainties are applied to the PSRV setpoints in the penalizing direction for overpressure (brittle fracture protection) and underpressure (reactor coolant pump operation). Control system delays and valve stroke times are modeled to accurately represent pressure overshoot and undershoot. Dynamic and static pressure differences between the pressure sensors and the RPV are applied when evaluating the peak pressures against the limits derived from 10 CFR Part 50, Appendix G.

5.3 *Setpoint Determination*

The LTOP analyses determine the maximum and minimum pressures for each analyzed transient for a given set of PSRV setpoints. The maximum pressure is higher than the PSRV setpoint due to control system delays and the time required for the valves to fully open. When the PSRVs open, the relief capacity is sufficient to reduce the system pressure. The system pressure then undershoots the setpoint until the PSRV reset pressure is reached and the valves are closed, accounting for control system delays and valve closure time. The PSRV opening and closing delays result in a repeating pressure oscillation that continues until the event is terminated.

The maximum pressure for each transient, with instrument uncertainty applied in the positive direction, is compared to the pressure-temperature limits derived from the fracture mechanics evaluation. The peak RPV pressure shall not exceed 100 percent of the applicable 10 CFR 50, Appendix G limit. The minimum pressure for each transient, with instrument uncertainty applied in the negative direction, is compared against limits

required for reactor coolant pump operation. Any set of PSRV setpoints that maintain RCS pressure within the upper and lower limits is acceptable.

5.4 *LTOP Enable Temperature*

The LTOP enable temperature is defined in Article G-2215 of ASME Code Section XI, Appendix G as 200°F or the reactor coolant temperature corresponding to the reactor vessel metal temperature equal to RT_{NDT} + 50°F, whichever is greater. In the latter case, the enable temperature accounts for the difference in temperature between the 1/4t crack-tip metal temperature and the reactor coolant temperature because the metal temperature is lower than the coolant temperature during heatup.

NRC Branch Technical Position 5-2 (Reference 17) defines the enable temperature as the water temperature corresponding to a metal temperature of at least RT_{NDT} + 90°F at the beltline location (1/4t or 3/4t) that is controlling in the 10 CFR Part 50, Appendix G limit calculations. Since this Branch Technical Position definition was established, ASME Code Cases (Code Case N-514 in 1992, Code Case N-640 in 1999, and Code Case N-641 in 2000) have been developed to establish an acceptable approach to develop LTOP limits that provides the necessary safety margins while also providing for an adequate normal operating window. The Code Cases included a lower LTOP enable temperature requirement, which was subsequently incorporated into ASME Code Section XI as stated above. The U.S. EPR follows ASME Code, Section XI, Appendix G because it represents significant advances in fracture mechanics and in the analysis of reactor vessel integrity, while providing greater operational flexibility.

6.0 U.S. EPR GENERIC PRESSURE TEMPERATURE LIMITS REPORT

6.1 *RCS Pressure Temperature Limits Report*

This PTLR has been prepared following the analytical methods described in Sections 2.0 through 5.0 of this report to meet the requirements of U.S. EPR Generic Technical Specifications Section 5.6.4. In particular, this PTLR specifies limits to satisfy Limiting Condition for Operation (LCO) 3.4.3, RCS Pressure and Temperature (P/T) Limits, and LCO 3.4.11, Low Temperature Overpressure Protection (LTOP). The content of this PTLR conforms to the requirements stated in NRC Generic Letter 96-03 (Reference 18).

This is a generic PTLR for the U.S. EPR design based on bounding material properties provided in design specifications and heatup and cooldown transients used in the design process. Actual material properties and operational transients will be addressed in the plant-specific PTLR.

6.2 *Normal Heatup and Cooldown Limits (LCO 3.4.3)*

A first step in establishing P-T limits is the collection of geometrical data and material properties including RT_{NDT} of the limiting materials. Table 6-1 and Table 6-2 provide the material properties used in the analysis.

For heatup and cooldown limits, an RCS coolant temperature-time history (hereinafter referred to as "temperature-time history") is created. The temperature-time histories are based on plant system operations and are typical heatup and cooldown temperature-time histories, respectively. With this input, allowable pressures are calculated for each selected time point of the temperature-time history. Actual heatup or cooldown rates can be anywhere between steady-state condition and the specified limits represented by the temperature-time histories. The analyses include four different cases: normal heatup, normal cooldown, ISLH heatup, and ISLH cooldown.

The RCS temperature rate of change limits are:

- A maximum RCS heatup rate of 72°F per hour.
- A maximum RCS cooldown rate of 90°F per hour.

The 1/4t flaws are postulated at both inside and outside surfaces (1/4t and 3/4t flaws, respectively) of the reactor vessel beltline region, remote from discontinuities. A second region, namely the nozzle corner in the RPV beltline region, is also assessed for allowable pressure at each selected time point. For the nozzle, the flaw is postulated to be located on an inside surface.

Because flaws are postulated on the inside and outside surfaces in the beltline region, three allowable pressure values are determined. These are the transient 1/4t and 3/4t flaw values and steady-state 1/4t flaw value for both circumferential and axial flaws in the beltline region. Accordingly, a total of six pressures are computed for the beltline region. Four additional pressure values are determined for the two nozzle corner crack locations, representing transient and steady-state conditions of the inlet and outlet nozzles.

Finally, the allowable pressure is determined for a third region, namely the closure head region. The closure head limits are developed from a separate analysis, considering the postulated outside surface flaw, as described in Section 4.2.2. The normal heatup and cooldown stresses in the closure head region are obtained from a detailed finite element stress analysis of the reactor vessel closure. The general form of the stress intensity factor equation reported in Section 4.5.1 is used. The allowable pressure and temperature limits for the reactor vessel closure head are determined considering the requirements of Reference 1 and Reference 2.

Among the six pressure values of the beltline region, the lowest one is determined and considered to be the maximum allowable pressure value at each selected time point. In this manner the results at various selected temperature-time history time points are determined to produce a single lower bound P-T limit curve for normal heatup or normal cooldown. The pressure values, along with the associated RCS coolant temperatures at the selected time points of the temperature-time history form the P-T limit curves.

The lowest allowable pressure at each time point yields a single lower bound P-T limit curve for normal heatup or normal cooldown. The P-T curves for normal plant heatup and cooldown are presented in Figure 6-1 and Figure 6-2, respectively, and are tabulated in Table 6-6 and Table 6-7, respectively.

The P-T limit curve for the closure head region is calculated separately. The allowable pressure from plant startup is maintained as a constant value of 635 psig (20 percent of preservice hydrostatic test pressure) from the bolt preload temperature condition until the coolant temperature reaches the temperature where a calculated crack-tip metal temperature exceeds the minimum temperature requirement of Reference 1 and Table 2-1. The minimum required temperatures are subsequently determined at 1285 psig and at 2325 psig (full power, steady-state condition). The resulting closure head limit curves are included in Figure 6-1 and Figure 6-2 for heatup and cooldown, respectively.

For plant heatup, the closure head limit curve lower bounds both the beltline region and the nozzle corner limit curves. As noted, the closure head limit does not change throughout the lifetime of the plant. In the case of normal cooldown from steady-state conditions, as shown in Figure 6-2, the beltline P-T limit is controlling until it intersects with the closure head limit curve. At 635 psig, which corresponds to 20 percent of the preservice hydrostatic test pressure, the allowable temperature corresponds to the minimum temperature requirement of RT_{NDT} +120°F per item 2.b of Table 2-1. The P-T limit curve for the (inlet and outlet) nozzle corner region is not a controlling P-T limit region at any time during normal plant heatup or cooldown.

The P-T limits thus calculated are "uncorrected P-T limits," meaning that measurement uncertainty due to instrument error or sensor location adjustment is not included. The sensor location adjustment is necessary due to the difference in sensor readings (pressure and temperature) at the measurement location compared to the corresponding pressures and temperatures at the controlling P-T limit region. Sensor location adjustment includes the effect of pump operation. These corrections are made to the uncorrected P-T limits and the resultant corrected P-T limits are presented in

Figure 6-1 and Figure 6-2. Any applicable pressure or temperature instrument error corrections have not been included in the curves.

6.2.1 *Summary of P-T Limits*

As shown in Figure 6-1 and Figure 6-2, in the low temperature range, the closure head limits are controlling. The beltline limits are higher than the closure head limits. For normal heatup, the closure head limit is always controlling. For normal cooldown (CD), different components are controlling during four different temperature ranges. First, in the low temperature range from 50°F to 116°F, the closure head is the controlling component. From 116°F to 122°F, the upper shell/lower shell is the controlling component because this beltline region's axial flaw (1/4t) during a transient CD condition is limiting. This axial flaw (1/4t) is also controlling in the third temperature range from 122°F to 138°F, but it is due to a steady state condition. Therefore, the upper shell/lower shell is the controlling component from 116°F to 138°F. The final temperature range is for temperatures 138°F and above. In this temperature range, the limiting location is a circumferential flaw (1/4t) at weld #2 due to a steady state condition.

For ISLH testing, the closure head limits are controlling for ISLH heatup. For an ISLH cooldown, different components are controlling during three different temperature ranges. First, in the low temperature range from 50°F to 116°F, the closure head is the controlling component. From 116°F to 122°F, the upper shell/lower shell is the controlling component because this beltline region's axial flaw (1/4t) during a transient CD condition is limiting. This axial flaw (1/4t) is also controlling in the third temperature range, which is above 122°F, but it is due to a steady state condition. Therefore, the upper shell/lower shell is the controlling component for temperatures above 116°F.

6.2.2 *Criticality Limit*

Following the steps defined in Section 4.8, the criticality limit temperature corresponding to a pressure of 2500 psig is determined to be 220°F. This temperature is compared to

the value of RT_{NDT} + 160°F (i.e., 156°F). The criticality limit temperature is the higher of these two values (i.e., 220°F). Therefore, the criticality limit curve reflects a minimum temperature of 220°F and the normal heatup limit curve shifted by 40°F for temperatures higher than this criticality limit temperature as shown in Figure 6-1.

6.3 *Reactor Vessel Material Surveillance Program*

The recommended RPV material surveillance program capsule withdrawal schedule is outlined in Table 6-3. Testing of each surveillance capsule will be performed in accordance with 10 CFR 50, Appendix H. The material data will be evaluated using the guidance of RG 1.99, which is described in Section 3.2. The P-T limits will be recalculated or the applicable EFPY will be adjusted, as necessary, to confirm that the 1/4t and 3/4t ART values of the RPV-based P-T limits are not exceeded.

6.4 *Low Temperature Overpressure Protection*

6.4.1 *PSRV Lift Setpoints for LTOP (LCO 3.4.11)*

The maximum PSRV lift setpoints for LTOP are determined in accordance with the methodology described in Section 5.0 and are presented in Table 6-4.

6.4.2 *LTOP Arming Temperature*

The minimum LTOP enable temperature is defined as 200°F or the reactor coolant temperature corresponding to the reactor vessel metal temperature equal to RT_{NDT} + 50°F, whichever is greater. According to Table 6-2, the highest RT_{NDT} is projected to be 126.5°F at 60 EFPY. Therefore, RT_{NDT} + 50°F is 176.5°F. This latter value must be added to the difference between the 1/4t crack-tip metal temperature and the reactor coolant temperature, which is 29.0°F based on the analyzed heatup transient. Therefore, the LTOP enable temperature is 205.5°F plus any adjustments for measurement uncertainty.

The LTOP arming temperature setpoint, as used in the U.S. EPR Generic Technical Specifications, defines the applicability of LCO 3.4.10 and LCO 3.4.11. The LTOP

arming temperature is specified in Table 6-4 and is above the minimum required by the fracture mechanics evaluation.

6.5 *Supplemental Data Tables*

Table 6-1 identifies the material composition of RPV beltline components based on the maximum limits for vessel manufacture and are therefore conservative. The chemistry factors for the materials are extracted from RG 1.99 Revision 2, Table 1 and Table 2.

Table 6-1 contains the maximum projected neutron fluence values for the RPV beltline materials at 60 EFPY. Calculated fluence values are tabulated at the inner wetted surface of the RPV and at the 1/4T and 3/4T positions, where T is the vessel thickness measured from the inside (wetted) surface.

Table 6-2 identifies the initial RT_{NDT} for each vessel material and the ART at 60 EFPY for the 1/4T and 3/4T locations. The initial RT_{NDT} is the maximum limit for vessel manufacture and is therefore conservative.

Table 6-5 contains the pressurized thermal shock (PTS) reference temperatures, RT_{PTS}, for each beltline material at the projected end of life (EOL) of 60 EFPY calculated in accordance with 10 CFR 50.61. The copper and nickel content for each material is specified in Table 6-1 along with the projected fluence, conservatively based on a 24-month cycle core design. Table 6-5 also contains the PTS screening criteria from 10 CFR 50.61. The RT_{PTS} values are not projected to exceed the PTS screening criteria using the EOL fluence.

Figure 6–1 U.S. EPR RCS P-T Limits – Normal Heatup with ISLH and Criticality Limit Curves Applicable to 60 EFPY

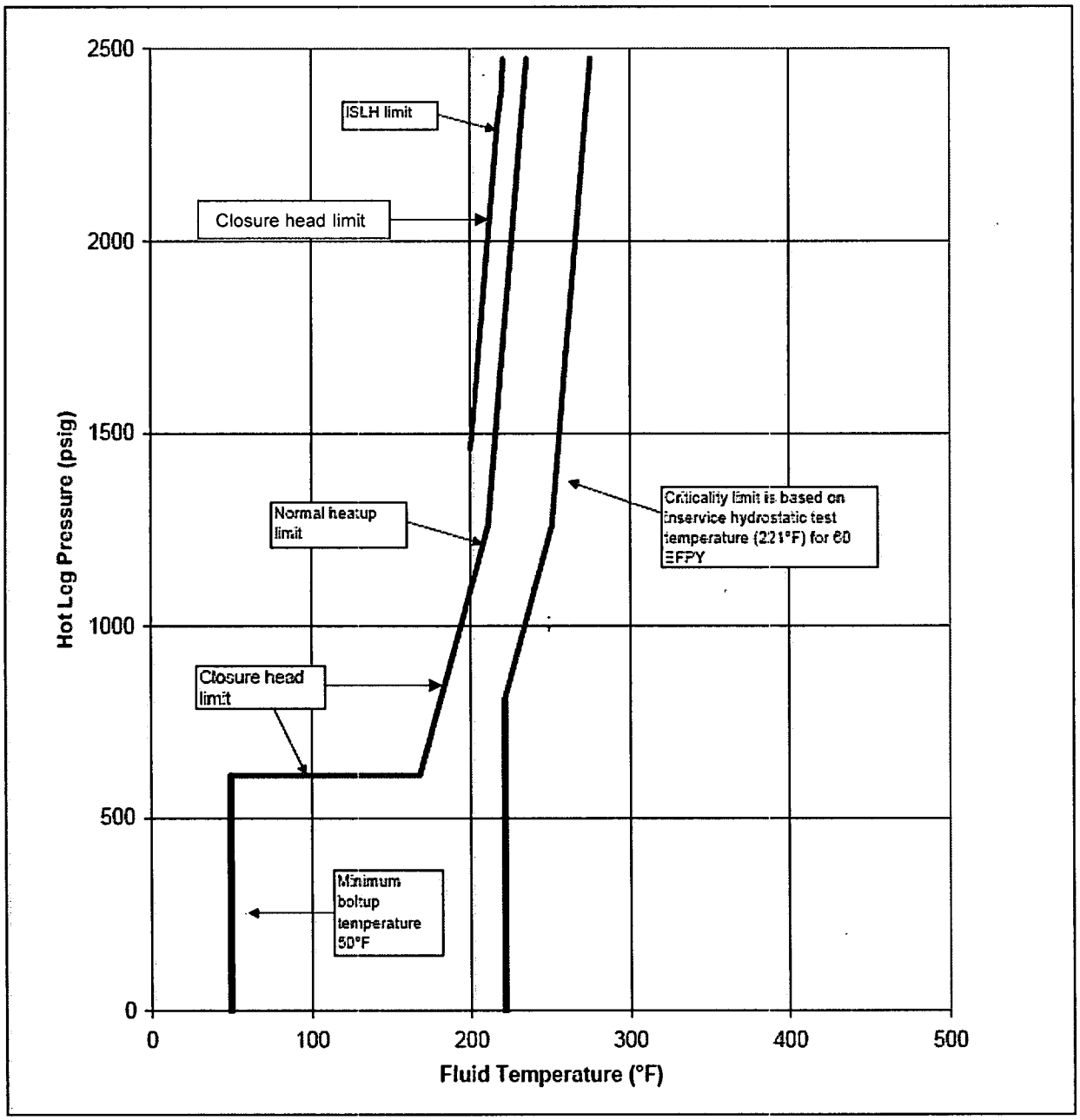

Note:

1. P-T limit curves do not include margin for instrument uncertainty.
2. Controlling component: Closure Head over the entire temperature range, ART = -4°F

Figure 6–2 U.S. EPR RCS P-T Limits – Normal Cooldown Applicable to 60 EFPY

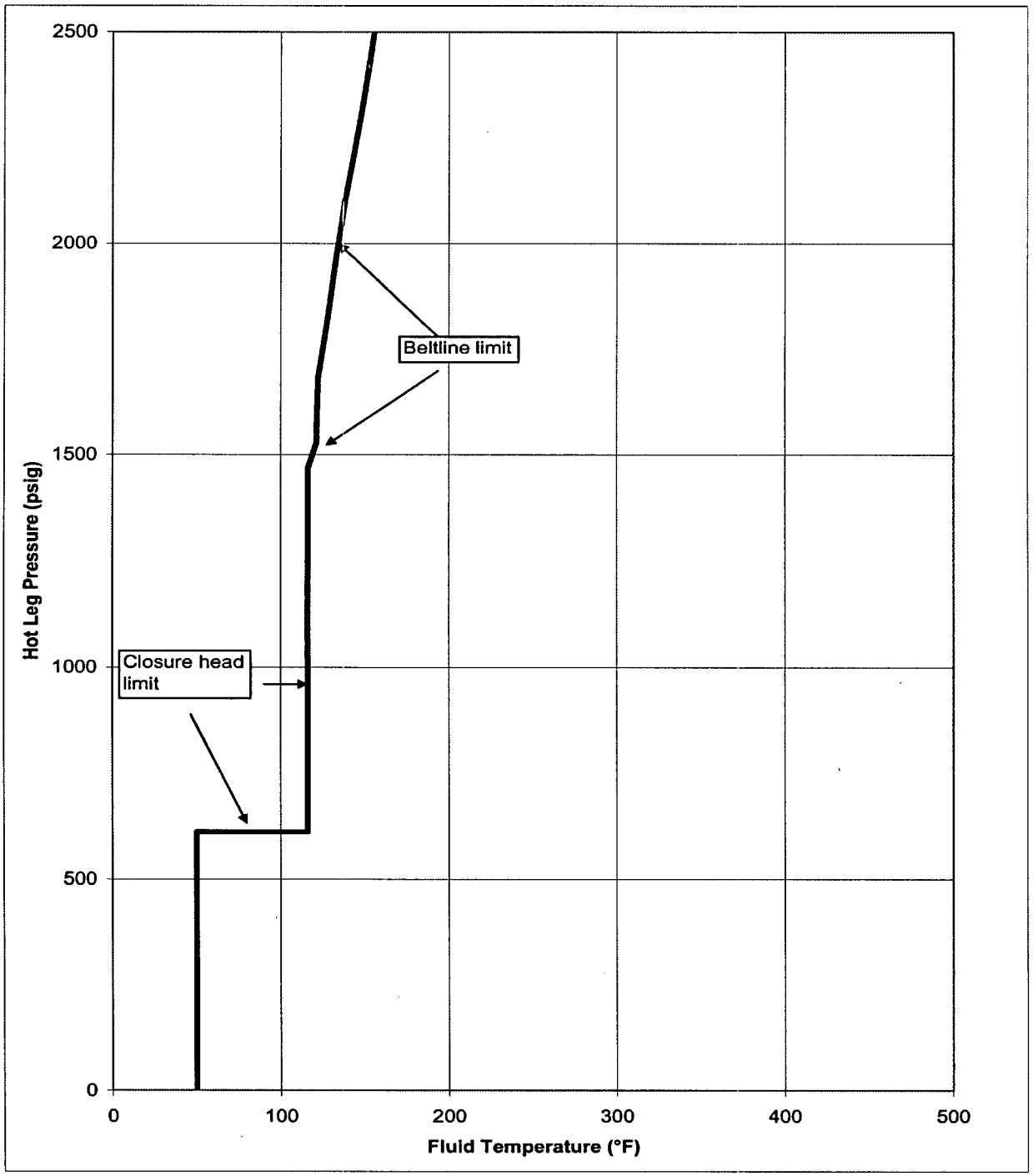

Notes for Figure 6-2:

1. P-T limit curves do not include margin for instrument uncertainty.
2. Controlling components during temperature range T(°F):
   $50 \leq T \leq 116$: Closure Head, ART = -4°F
   $116 \leq T \leq 122$: Upper Shell/Lower Shell, ART = 63.4°F
   $122 < T < 138$: Upper Shell/Lower Shell, ART = 63.4°F
   $T \geq 138$: weld #2, ART = 126.5°F

Table 6–1 Chemical Composition and Projected Fluence for the U.S. EPR Reactor Vessel Materials through 60 EFPY

Material Description		Chemical Composition			60 EFPY Fluence, n/cm^2 (1)		
Reactor Vessel	Type	Cu wt %	Ni wt %	Chemistry Factor(2)	Inner Wetted Surface	1/4t Location (3)	3/4t Location (3)
Nozzle Shell (4)	SA-508 Grade 3 Class 1	0.08	0.80	51.0	2.103E+17	1.111E+17	3.410E+16
Upper Core Shell	SA-508 Grade 3 Class 1	0.06	0.80	37.0	1.375E+19	7.262E+18	2.230E+18
Lower Core Shell	SA-508 Grade 3 Class 1	0.06	0.80	37.0	1.375E+19	7.262E+18	2.230E+18
Transition Ring (5)	SA-508 Grade 3 Class 1	0.08	0.80	51.0	4.406E+18	2.327E+18	7.145E+17
Weld #1	Low Alloy Steel Weld	0.06	1.20	82.0	2.103E+17	1.111E+17	3.410E+16
Weld #2	Low Alloy Steel Weld	0.06	1.20	82.0	1.368E+19	7.225E+18	2.218E+18
Weld #3	Low Alloy Steel Weld	0.06	1.20	82.0	4.406E+18	2.327E+18	7.145E+17

Notes:

wt % = weight percentage
t = wall thickness

1. Projected neutron fluence (E > 1 MeV) conservatively based on a 24-month cycle core design.
2. Chemistry factors extracted from Table 1 and Table 2 of RG1.99 Revision 2.
3. Calculated using Equation 3 of RG 1.99 Revision 2 and a vessel thickness of 9.84 inches with a minimum cladding thickness of 0.20 inches.
4. The fluence value for the nozzle shell is conservatively assigned the fluence value for Weld #1.
5. The fluence value for the transition ring is conservatively assigned the fluence value for Weld #3.

Table 6–2 Adjusted Reference Temperature for the U.S. EPR Reactor Vessel Materials through 60 EFPY

Material Description		Initial RT_{NDT} (°F)	ART, °F at 60 EFPY[1]	
Reactor Vessel	Type		1/4t Location	3/4t Location
Nozzle Shell	SA-508, Grade 3, Class 1	-4	8.0	1.2
Upper Core Shell	SA-508, Grade 3, Class 1	-4	63.4[3]	40.2
Lower Core Shell	SA-508, Grade 3, Class 1	-4	63.4[3]	40.2
Transition Ring	SA-508, Grade 3, Class 1	-4	57.8	32.0
Weld #1	Low Alloy Steel Weld	-4	15.4	4.2
Weld #2	Low Alloy Steel Weld	-4	126.5[3]	93.4
Weld #3	Low Alloy Steel Weld	-4	95.4	53.8
Closure Head	SA-508, Grade 3, Class 1	-4	-4[2]	-4[2]
Closure Head	Closure Head Weld	-4	-4[2]	-4[2]

Notes:

1. The margin term in the RG 1.99 Revision 2 expression for adjusted reference temperature is calculated according to RG 1.99 Revision 2, Equation 4. The standard deviation for initial RTNDT is 0°F because the initial RTNDT is specified as a maximum limit for vessel manufacture. The standard deviation for ΔRTNDT is the lesser of 28°F for welds and 17°F for base metals and 0.50 times the mean value of ΔRTNDT calculated from the chemistry factors and fluences in Table 6-1.
2. The projected fluence to the RPV head is insufficient to cause any measurable shift in RTNDT. Limiting ART values and materials used in the generation of Normal Heatup with ISLH as well as during low temperature region of the Normal Cooldown P-T Limit Curves.
3. Limiting beltline ART values and materials used in the generation of the P-T Limit Curves during Normal Cooldown P-T Limit Curves.

Table 6–3 U.S. EPR Material Surveillance Program Recommended Specimen Withdrawal Schedule

Capsule	EFPY	Target Capsule Fluence (n/cm^2)	ASTM E185-82 Requirement(1)
1	6	2.1×10^{18}	6 EFPY or 5×10^{18} n/cm^2, whichever comes first
2	15	5.2×10^{18}	15 EFPY or EOL fluence at the vessel inside surface, whichever comes first
-	20	7.3×10^{18}	Not required
-	40	1.3×10^{19}	Not required
3	60	2.1×10^{19}	EOL, but between one and two times EOL fluence at the vessel inside surface
4	Supplemental	To be determined	Not required

Note:

1. ASTM E185-82 requirements are based on a predicted ΔRTNDT at the vessel inside surface ≤ 100°F. The predicted transition temperature shift is 89°F for circumferential weld #2 per RG1.99, Rev. 2 at the RPV inside surface at 60 EFPY using the limiting compositions of Cu and Ni contained in the weld and the highest initial RTNDT.

Table 6–4 LTOP Settings

Parameter	Values
Maximum PSRV Lift Setpoints	525 psig(1)
	541 psig(1)
LTOP Arming Temperature	248°F

Note:

1. Hot leg pressure indication. Setpoints do not include instrument uncertainty, which is accounted for in the LTOP analyses.

Table 6–5 U.S. EPR Pressurized Thermal Shock Reference Temperature at EOL (60 EFPY)

Reactor Vessel Location	60 EFPY Fluence, n/cm2 (Inner Wetted Surface)(1)	Chemistry Factor(2)	Fluence Factor(3)	ΔRT_{NDT} (°F)	Margin (°F)(4)	RT_{PTS} (°F)	Screening Criterion (°F)
Nozzle Shell	2.103E+17	51.0	0.177	9.0	9.0	14.0	270
Upper Core Shell	1.375E+19	37.0	1.088	40.3	34.0	70.3	270
Lower Core Shell	1.375E+19	37.0	1.008	40.3	34.0	70.3	270
Transition Ring	4.406E+18	51.0	0.772	39.4	34.0	69.4	270
Weld #1	2.103E+17	82.0	0.177	14.4	14.4	24.8	300
Weld #2	1.368E+19	82.0	1.087	89.1	56.0	141.1	300
Weld #3	4.406E+18	82.0	0.772	63.3	56.0	115.3	300

Notes:

1. The fluences at the inside wetted surface of the vessel are conservative compared to the fluences at the clad-base metal interface as stated in 10 CFR 50.61.
2. Chemistry factors are based on the copper and nickel contents specified in Table 6-1 and Table 1 and Table 2 of 10 CFR 50.61.
3. Fluence factor is the fluence term in Equation 3 of 10 CFR 50.61. The RT_{PTS} calculation conservatively uses the fluence at the inside wetted surface of the vessel.
4. The margin term is calculated according to 10 CFR 50.61, Equation 2. The standard deviation for initial or unirradiated RTNDT is 0°F because the initial RTNDT is specified as a maximum for vessel manufacture and will be measured. The standard deviation for ΔRTNDT is the lesser of 28°F for welds and 17°F for base metals and 0.50 times ΔRTNDT.

Table 6–6 RCS Heatup Limits at 60 EFPY

Normal Heatup		Criticality Limit		ISLH Test Limit	
Fluid Temp. (°F)	Hot Leg Press. (psig)	Fluid Temp. (°F)	Hot Leg Press. (psig)	Fluid Temp. (°F)	Hot Leg Press. (psig)
50	0	221	0	200	1457
50	611	221	807	205	1705
55	611	225	868	210	1953
60	611	230	943	215	2202
65	611	235	1019	217	2301
70	611	240	1095	220	2400
75	611	245	1170	220.53	2476
80	611	250	1246		
85	611	251	1261		
90	611	255	1459		
95	611	260	1707		
100	611	265	1954		
105	611	270	2202		
110	611	272	2301		
115	611	275	2457		
120	611	275.37	2476		
125	611				
130	611				
135	611				
140	611				
145	611				
150	611				
155	611				

Normal Heatup		Criticality Limit		ISLH Test Limit	
Fluid Temp. (°F)	Hot Leg Press. (psig)	Fluid Temp. (°F)	Hot Leg Press. (psig)	Fluid Temp. (°F)	Hot Leg Press. (psig)
160	611				
165	611				
168	611				
170	641				
175	717				
180	792				
185	868				
190	943				
195	1019				
200	1095				
205	1170				
210	1246				
211	1261				
215	1459				
220	1707				
225	1954				
230	2202				
232	2301				
235	2457				
235.37	2476				

Notes:

The tabulated heatup limits do not include margin for instrument uncertainty.

Table 6–7 RCS Cooldown Limits at 60 EFPY

Fluid Temperature (°F)	Hot Leg Pressure (psig)
50	0
50	611
52	611
57	611
62	611
67	611
72	611
77	611
82	611
87	611
91	611
96	611
101	611
106	611
111	611
116	611
116	1468
121	1527
122	1680
123	1704
128	1830
133	1970
138	2099
143	2200

Fluid Temperature (°F)	Hot Leg Pressure (psig)
148	2312
153	2435
158	2572

Notes:

The tabulated cooldown limits do not include margin for instrument uncertainty.

7.0 SUMMARY AND CONCLUSION

This technical report presents the methodology for the development of P-T limits used to demonstrate compliance with the fracture toughness and requirements of 10 CFR Part 50, Appendix G and Reference 1. The P-T limits generated by this methodology provide an adequate margin of safety for protecting the integrity of the RCPB of the U.S. EPR during conditions of normal operation, including AOOs and ISLH tests, to which the RCPB may be subjected over its service lifetime.

8.0 REFERENCES

1. ASME Boiler and Pressure Vessel Code, Section XI, Appendix G, American Society of Mechanical Engineers, 2004 Edition.
2. 10 CFR Part 50, Appendix G, Fracture Toughness Requirements.
3. 10 CFR 50.60, Acceptance Criteria for Fracture Prevention Measures for Light Water Nuclear Power Reactors for Normal Operation.
4. Section NB-2300, Section III, ASME Boiler and Pressure Vessel Code, American Society of Mechanical Engineers, 2004 Edition.
5. ASME Boiler and Pressure Vessel Code, Section III, Appendix G, American Society of Mechanical Engineers, 1986 Edition.
6. Welding Research Council Bulletin 175, PVRC Recommendation on Fracture Toughness, Welding Research Council, Pressure Vessel Research Committee Ad Hoc Group on Toughness Requirements, August 1972.
7. Regulatory Guide 1.99, Revision 2, 1988, Radiation Embrittlement Damage to Reactor Vessel Materials, U.S. Nuclear Regulatory Commission.
8. W.H. Bamford et al., "Technical Basis for Elimination of Reactor Vessel Nozzle Inner Radius Inspection," Proceedings of 2001 ASME Pressure Vessel & Piping Conference, PVP-Vol. 422.
9. 10 CFR 50.55a, Codes and Standards.
10. [ ]
11. [ ]
12. BAW-2241P-A, "Fluence and Uncertainty Methodologies," Revision 2, AREVA NP Inc.
13. Regulatory Guide 1.190, Calculational and Dosimetry Methods for Determining Pressure Vessel Neutron Fluence, U.S. Nuclear Regulatory Commission, March 2001.
14. ASTM E 185-82, "Standard Practice for Conducting Surveillance Tests for Light-Water Cooled Nuclear Power Reactor Vessels," ASTM International, 1982.
15. ASTM E 185-02, "Standard Practice for Design of Surveillance Programs for Light-Water Moderated Nuclear Power Reactor Vessels," ASTM International, 2002.
16. BAW-10164P-A, "RELAP5/MOD2-B&W – An Advanced Computer Program for Light Water Reactor LOCA and Non-LOCA Transient Analysis," Framatome ANP.
17. Branch Technical Position 5-2 Revision 3, "Overpressurization Protection of Pressurized-Water Reactors while Operating at Low Temperatures," U.S. Nuclear Regulatory Commission, March 2007.
18. NRC Generic Letter 96-03, "Relocation of the Pressure Temperature Limit Curves and Low Temperature Overpressure Protection System Limits," January 31, 1996.