Attachment 4

Peach Bottom Atomic Power Station Units 2 and 3

NRC Docket Nos. 50-277 and 50-278

NEDC-33566P, Safety Analysis Report for Exelon Peach Bottom Atomic Power Stations Units 2 and 3 Constant Pressure Power Uprate (Non-proprietary)

HITACHI

GE Hitachi Nuclear Energy

NEDO-33566
Revision 0
DRF 0000-0107-2302
September 2012

Non-Proprietary Information – Class I (Public)

SAFETY ANALYSIS REPORT

FOR

EXELON PEACH BOTTOM ATOMIC POWER STATION UNITS 2 AND 3

CONSTANT PRESSURE POWER UPRATE

INFORMATION NOTICE

This is a non-proprietary version of the document NEDC-33566P, Revision 0, which has the proprietary information removed. Portions of the document that have been removed are indicated by an open and closed bracket as shown here [[ ]].

IMPORTANT NOTICE REGARDING CONTENTS OF THIS REPORT

Please Read Carefully

The design, engineering, and other information contained in this document is furnished for the purposes of supporting the Exelon Generation Company, LLC (Exelon) license amendment request for an extended power uprate at Peach Bottom Atomic Power Station Units 2 and 3 in proceedings before the U.S. Nuclear Regulatory Commission (NRC). The only undertakings of GEH with respect to information in this document are contained in the contracts between GEH and its customers or participating utilities, and nothing contained in this document shall be construed as changing that contract. The use of this information by anyone for any purpose other than that for which it is intended is not authorized; and with respect to any unauthorized use, GEH makes no representation or warranty, and assumes no liability as to the completeness, accuracy, or usefulness of the information contained in this document.

No use of or right to copy any of this information contained in this document, other than by the NRC and its contractors in support of GEH's application, is authorized except by contract with GEH, as noted above. The information provided in this document is part of and dependent upon a larger set of knowledge, technology, and intellectual property rights pertaining to the design of standardized, nuclear powered, electric generating facilities. Without access and a GEH grant of rights to that larger set of knowledge, technology, and intellectual property rights, this document is not practically or rightfully usable by others, except by the NRC or through contractual agreements with Exelon, as set forth in the previous paragraph.

TABLE OF CONTENTS

Appendix

TABLES

FIGURES

ACRONYMS AND ABBREVIATIONS

Term	Definition
AACS	Alternate AC Sources
ABA	Amplitude Based Algorithm
AC	Alternating Current
ADS	Automatic Depressurization System
AEC	Atomic Energy Commission
AHC	Access Hole Cover
AIZ	Above Instrument Zero
AL	Analytical Limit
ALARA	As Low As Is Reasonably Achievable
ANS	American Nuclear Society
ANSI	American National Standards Institute
AOO	Anticipated Operational Occurrence (moderate frequency transient event)
AOP	Abnormal Operating Procedure
AOV	Air-Operated Valve
AP	Annulus Pressurization
APRM	Average Power Range Monitor
ARI	Alternate Rod Insertion
ART	Adjusted Reference Temperature
ARTS	APRM/RBM/Technical Specifications
ASD	Adjustable Speed Drive
ASDC	Alternate Shutdown Cooling
ASME	American Society of Mechanical Engineers
AST	Alternate Source Term
ATWS	Anticipated Transient Without Scram
AV	Allowable Value
AVZ	Above Vessel Zero
BCR	Backup Counting Room

Term	Definition
BHP	Brake Horsepower
BIIT	Boron Injection Initiation Temperature
BOC	Beginning of Cycle
BOP	Balance-of-Plant
B&PV	Boiler and Pressure Vessel
BPWS	Banked Position Withdrawal Sequence
BSP	Backup Stability Protection
BTU	British Thermal Unit
BWR	Boiling Water Reactor
BWROG	BWR Owners Group
BWRVIP	BWR Vessel and Internals Project
CAD	Containment Atmospheric Dilution
CAP	Containment Accident Pressure
CARV	Cross Around Relief Valve
CDF	Core Damage Frequency
CFR	Code of Federal Regulations
CFS	Condensate and Feedwater System
CIC	Coolant Injection Cooling
CLTP	Current Licensed Thermal Power
CLTR	Constant Pressure Power Uprate Licensing Topical Report
CO	Condensation Oscillation
COLR	Core Operating Limits Report
CPPU	Constant Pressure Power Uprate
CR	Control Room
CRAVS	Control Room Area Ventilation System
CRD	Control Rod Drive
CRDA	Control Rod Drop Accident

Term	Definition
CRDH	Control Rod Drive Housing
CREV	Control Room Emergency Ventilation
CRGT	Control Rod Guide Tube
CS	Core Spray
CSBW	Cold Shutdown Boron Weight
CSC	Containment Spray Cooling
CST	Condensate Storage Tank
CUF	Cumulative Usage Factor
CWS	Circulating Water System
DBA	Design Basis Accident
DBLOCA	Design Basis Loss-of-Coolant Accident
DC	Direct Current
DIVOM	Delta CPR over Initial CPR Versus Oscillation Magnitude
DLO	Dual (Recirculation) Loop Operation
DW	Drywell
EAB	Exclusion Area Boundary
ECCS	Emergency Core Cooling System
ECP	Electrochemical Potential
ECW	Emergency Cooling Water
EFDS	Equipment and Floor Drainage System
EFPY	Effective Full Power Years
ELTR1	Generic Guidelines for General Electric Boiling Water Reactor Extended Power Uprate Licensing Topical Report
ELTR2	Generic Evaluations of General Electric Boiling Water Reactor Extended Power Uprate Licensing Topical Report
EOC	End of Cycle
EOP	Emergency Operating Procedure
EPRI	Electric Power Research Institute

Term	Definition
EPU	Extended Power Uprate
EQ	Environmental Qualification
ESF	Engineered Safety Feature
ESFAS	Engineered Safety Feature Actuation System
ESFVS	Engineered Safety Feature Ventilation System
ESW	Emergency Service Water
FAC	Flow Accelerated Corrosion
FFWTR	Final Feedwater Temperature Reduction
FHA	Fuel Handling Accident
FIV	Flow Induced Vibration
FPC	Fuel Pool Cooling
FPCCS	Fuel Pool Cooling and Cleanup System
FPP	Fire Protection Program
FSSDs	Fire Safe Shutdown Directives
ft.	Feet
FW	Feedwater
FWCF	Feedwater Controller Failure Maximum Demand
FWHOOS	Feedwater Heater Out-of-Service
GE	General Electric
GEH	GE-Hitachi Nuclear Energy Americas LLC
GL	Generic Letter
GNF	Global Nuclear Fuel LLC
gpm	Gallons Per Minute
GRA	Growth Rate Based Algorithm
GSU	Generator Step-Up
GWd/MT	Giga-Watt Day per Metric Ton
GWd/MTU	Giga-Watt Day per Metric Ton of Uranium

Term	Definition
GWd/ST	Giga-Watt Day per Short Ton
GWMS	Gaseous Waste Management (Offgas) System
HCTL	Heat Capacity Temperature Limit
HDWP	High Drywell Pressure
HDWP/ LRPVP	High Drywell Pressure concurrent with Low Reactor Pressure Vessel Pressure
HELB	High Energy Line Break
HEPA	High Efficiency Particulate Air
HFCL	High Flow Control Line
Hg_a	Inches of Mercury Absolute
HP	High Pressure
HPCI	High Pressure Coolant Injection
HPSW	High Pressure Service Water
HPT	High Pressure Turbine
HSBW	Hot Shutdown Boron Weight
HVAC	Heating Ventilating and Air Conditioning
HWC	Hydrogen Water Chemistry
HWL	High Water Level
I&C	Instrumentation and Control
IASCC	Irradiation-Assisted Stress Corrosion Cracking
ICA	Interim Corrective Action
ICF	Increased Core Flow
IEB	NRC Inspection and Enforcement Bulletin
IEEE	Institute of Electrical and Electronics Engineers
IGSCC	Intergranular Stress Corrosion Cracking
IMLTR	Interim Methods Licensing Topical Report
IRM	Intermediate Range Monitor
ISI	In-Service Inspection

Term	Definition
IST	In-Service Testing
JI	Jet Impingement
JIT	Just-In-Time
kV	Thousand Volts
LCO	Limiting Condition for Operation
LDI	Liquid Drop Impingement
LDS	Leak Detection System
LERF	Large Early Release Frequency
LFWH	Loss of Feedwater Heater
LHGR	Linear Heat Generation Rate
LLHS	Light Load Handling System
LOCA	Loss-of-Coolant Accident
LOCV	Loss of Condenser Vacuum
LOFW	Loss of Feedwater
LOOP	Loss of Offsite Power
LP	Low Pressure
LPCI	Low Pressure Coolant Injection
LPRM	Local Power Range Monitor
LPSP	Low Power Setpoint
LPT	Low Pressure Turbine
LPZ	Low Population Zone
LRNBP	Generator Load Rejection with no Steam Bypass Failure
LRPVP	Low Reactor Pressure Vessel Pressure
LTR	Licensing Topical Report
LWL	Low Water Level
LWMS	Liquid Waste Management System
MAPLHGR	Maximum Average Planar Linear Heat Generation Rate

Term	Definition
MBTU	Millions of BTUs
MC	Main Condenser
MCES	Main Condenser Evacuation System
MCO	Reactor Steam Dryer Exit Moisture Carryover Fraction
MCPR	Minimum Critical Power Ratio
MCREV	Main Control Room Emergency Ventilation
MDRIR	Minimum Debris Retention Injection Rate
MELB	Moderate Energy Line Break
MELC	Moderate Energy Line Crack
MELLLA	Maximum Extended Load Line Limit Analysis
MeV	Million Electron Volts
MFLCPR	Maximum Fraction of Limiting Critical Power Ratio (ratio MCPR to limit)
MFLPD	Maximum Fraction of Limiting Power Density (ratio MLHGR to limit)
Mlb	Millions of Pounds
MOC	Middle of Cycle
MOP	Mechanical Overpower
MOV	Motor Operated Valve
MPS	Minimum Recirculation Pump Speed
MS	Main Steam
MSS	Main Steam System
MSF	Modified Shape Function
MSIV	Main Steam Isolation Valve
MSIVC	Main Steam Isolation Valve Closure
MSIVF	Main Steam Isolation Valve Closure with Scram on High Flux
MSL	Main Steam Line
MSLB	Main Steam Line Break
MSLBA	Main Steam Line Break Accident

Term	Definition
MSSS	Main Steam Supply System
MVA	Million Volt Amps
MVAR	Million Volt Amps Reactive
MWd	Energy Units MWd Thermal Energy
MWd/ST	Exposure Units MWd Thermal Energy Per Core Weight Short Tons
MWe	Megawatts-Electric
MWt	Megawatt-Thermal
N/A	Not Applicable
NCL	Natural Circulation Line
NDE	Non-Destructive Examination
NMCA	Noble Metal Chemical Addition
NobleChem™	Noble metal chemicals are added to coat metal surfaces as catalysts for HWC allowing IGSCC mitigation at lower hydrogen injection rates.
NPSH	Net Positive Suction Head
NPSHR	Net Positive Suction Head Required
$NPSHR_{eff}$	Effective NPSHR
$NPSHR_{3\%}$	Net Positive Suction Head Required with 3% pump curve margin
NRC	United States Nuclear Regulatory Commission
NSDC	Normal Shutdown Cooling
NSI	Next Scheduled Inspection
NSSS	Nuclear Steam Supply System
NTSP	Nominal Trip Set Point
NUREG	Nuclear Regulatory Commission Technical Report Designation
OE	Operating Experience
OFS	Orificed Fuel Support
OLMCPR	Operating Limit Minimum Critical Power Ratio
OLTP	Original Licensed Thermal Power
ON	Off-Normal Procedure

Term	Definition
OOS	Out-of-Service
OPRM	Oscillation Power Range Monitor
OSC	Operations Support Center
OT	Operational Transient Procedure
ΔP	Differential Pressure – psi
P_{25}	25% of EPU Rated Thermal Power
PBAPS	Peach Bottom Atomic Power Station Unit 2 and 3
PBDA	Period Based Detection Algorithm
PCS	Pressure Control System
PCT	Peak Cladding Temperature
PECO	Philadelphia Electric Company
PF	Power Factor
ppb	Parts Per Billion
PRA	Probabilistic Risk Assessment
PRFO	Pressure Regulator Failure Open
psi	Pounds per Square Inch
psia	Pounds per Square Inch – Absolute
psid	Pounds per Square Inch – Differential
psig	Pounds per Square Inch – Gauge
PSP	Pressure Suppression Pressure
P-T	Pressure-Temperature
PUSAR	Power Uprate Safety Analysis Report (This Document)
QA	Quality Assurance
QATR	Quality Assurance Topical Report
RBCCW	Reactor Building Closed Cooling Water
RBM	Rod Block Monitor
RCIC	Reactor Core Isolation Cooling

Term	Definition
RCPB	Reactor Coolant Pressure Boundary
RCS	Reactor Coolant System
RFP	Reactor Feedwater Pump
RG	Regulatory Guide
RHR	Residual Heat Removal
RIPD	Reactor Internal Pressure Difference
RLA	Reload Licensing Analysis
RPS	Reactor Protection System
RPT	Recirculation Pump Trip
RPV	Reactor Pressure Vessel
RRS	Reactor Recirculation System
RSLB	Recirculation Loop Suction Line Break
RT_{NDT}	Reference Temperature of the Nil-Ductility Transition
RTP	Rated Thermal Power
RWCU	Reactor Water Cleanup
RWE	Rod Withdrawal Error
RWM	Rod Worth Minimizer
RWST	Refueling Water Storage Tank
S_{alt}	EPU Alternating Stress Intensity
S_m	Code Allowable Stress Limit
SAF	Single Active Failure
SAFDL	Specified Acceptable Fuel Design Limits
SAMP	Severe Accident Management Procedure
SBO	Station Blackout
scfh	Standard Cubic Feet Per Hour
scfm	Standard Cubic Feet Per Minute
SER	Safety Evaluation Report

Term	Definition
SE	Special Event Procedure
SFA	Steam/Feedwater Application
SFP	Spent Fuel Pool
SFPAVS	Spent Fuel Pool Area Ventilation System
SGTS	Standby Gas Treatment System
SHB	Shroud Head Bolts
SIL	Services Information Letter
SJAE	Steam Jet Air Ejectors
SLC	Standby Liquid Control
SLCS	Standby Liquid Control System
SLMCPR	Safety Limit Minimum Critical Power Ratio
SLO	Single-loop Operation
SORV	Stuck Open Relief Valve
SP	Suppression Pool – For PBAPS this is also called the Torus
SPC	Suppression Pool Cooling
SPDS	Safety Parameter Display System
SRLR	Supplemental Reload Licensing Report
SRM	Source Range Monitor
SRP	Standard Review Plan
SRSS	Square Root of the Sum of the Squares
SRV	Safety Relief Valve
SRVDL	Safety Relief Valve Discharge Line
SSC	Systems, Structures and Components
SSE	Safe Shutdown Earthquake
SSLB	Small Steam Line Break
SSV	Spring Safety Valve
SSW	Sacrificial Shield Wall

Term	Definition
SW	Service Water
SWMS	Solid Waste Management Systems
TAF	Top of Active Fuel
TBCCW	Turbine Building Closed Loop Cooling Water
TBS	Turbine Bypass System
TCV	Turbine Control Valve
TEDE	Total Effective Dose Equivalent
TFSP	Turbine First-Stage Pressure
T-G	Turbine-Generator
TIP	Traversing Incore Probe
TOP	Thermal Overpower
TRIP	Transient Response Implementation Plan Procedure
TRM	Technical Requirements Manual
TS(s)	Technical Specification(s)
TSC	Technical Support Center
TSV	Turbine Stop Valve
TSVC	Turbine Stop Valve Closure
TTNBP	Turbine Trip with no Steam Bypass Failure
UAT	Unit Auxiliary Transformer
U_{en}	Environmentally-Assisted Fatigue Usage
UHS	Ultimate Heat Sink
UFSAR	Updated Final Safety Analysis Report
USE	Upper Shelf Energy
VWO	Valve Wide-Open
WB	Whole Body
WRNM	Wide Range Neutron Monitor
WW	Wetwell

EXECUTIVE SUMMARY

This report summarizes the results of safety evaluations performed that justify uprating the licensed thermal power at Peach Bottom Atomic Power Station Units 2 and 3 (PBAPS). The requested licensed power is an increase to 3951 MWt from the current licensed reactor thermal power of 3514 MWt.

GE-Hitachi Nuclear Energy Americas LLC (GEH) has previously developed and implemented Extended Power Uprate (EPU) at several nuclear power plants. Based on EPU experience, GEH developed an approach to uprate reactor power that maintains the current plant maximum normal operating reactor dome pressure. This approach is referred to as Constant Pressure Power Uprate (CPPU) and was approved by the Nuclear Regulatory Commission (NRC) in the Licensing Topical Report (LTR) NEDC-33004P-A, Revision 4, "Constant Pressure Power Uprate," hereafter referred to as the CLTR. The CLTR was approved for Boiling Water Reactor (BWR) plants containing General Electric (GE) fuel types through GE14 and using GEH accident analysis methods. PBAPS contains only GE fuel types, through and including GNF2, and this evaluation uses only GEH accident analysis methods.

Because PBAPS uses GNF2 fuel, the CLTR is not applicable for fuel design dependent evaluations and the transients performed in support of the generic disposition in the CLTR are not applicable. Therefore, for fuel-dependent topics, this report follows the NRC-approved generic content for BWR EPU licensing reports, documented in NEDC-32424P-A, "Generic Guidelines For General Electric Boiling Water Reactor Extended Power Uprate," commonly called "ELTR1." Per ELTR1, every safety issue that should be addressed in a plant-specific EPU licensing report is addressed in this report. For issues that have been evaluated generically, this report references the NRC-approved generic evaluations in NEDC-32523P-A, "Generic Evaluations of General Electric Boiling Water Reactor Extended Power Uprate," which is commonly called "ELTR2."

This report reflects the systematic application of the CLTR approach to PBAPS for topics that are not fuel-dependent, including performance of plant-specific engineering assessments and confirmation of the applicability of the CLTR generic assessments required to support an EPU.

By performing the power uprate in accordance with the CLTR, ELTR1, ELTR2, and their NRC Safety Evaluation Reports (SERs), the evaluation scope of the plant safety analyses and system performance is reduced, thus allowing for a more streamlined process.

It is not the intent of this report to explicitly address all the details of the analyses and evaluations described herein. For example, only previously NRC-approved or industry-accepted methods were used for the analyses of accidents and transients, as referred to in the CLTR, ELTR1, or ELTR2. The safety analysis methods have been previously addressed, and thus, are not explicitly addressed in this report. Also, event and analysis descriptions that are already provided in other licensing reports or the Updated Final Safety Analysis Report (UFSAR) are not repeated within this report. This report summarizes the significant evaluations needed to support a licensing amendment to allow for uprated power operation.

Uprating the power level of nuclear power plants can be done safely within plant-specific limits and is a cost-effective way to increase installed electrical generating capacity. Many light water reactors have already been uprated worldwide, including many BWR plants.

An increase in the electrical output of a BWR plant is accomplished primarily by generating and supplying higher steam flow to the turbine-generator (T-G). PBAPS, as originally licensed, has an as-designed equipment and system capability to accommodate steam flow rates above the current rating. Also, the plant has sufficient design margins to allow the plant to be safely uprated significantly beyond its original licensed power level.

A higher steam flow is achieved by increasing the reactor power along specified control rod and core flow lines. A limited number of operating parameters are changed, some setpoints are adjusted and instruments are recalibrated. Plant procedures are revised, and tests similar to some of the original startup tests are performed.

Detailed evaluations of the reactor, engineered safety features (ESFs), power conversion, emergency power, support systems, and design basis accidents (DBAs) were performed. This report demonstrates that PBAPS can safely operate at the requested EPU level. However, non-safety power generation modifications must be implemented in order to obtain the electrical power output associated with the uprate power. Until these modifications are completed, the non-safety, balance-of-plant (BOP) equipment may limit the electrical power output, which in turn may limit the operating thermal power level to less than the rated thermal power (RTP) level.

All safety aspects of PBAPS that are affected by the increase in thermal power have been evaluated. The evaluations and reviews were conducted in accordance with the CLTR and the criteria in ELTR1 using NRC-approved or industry-accepted analysis methods. The results of these evaluations and reviews presented in this report are as follows:

- All safety aspects of PBAPS that are affected by the increase in thermal power were evaluated;
- Evaluations were performed using NRC-approved or industry-accepted analysis methods;
- Systems and components affected by EPU were reviewed to ensure there is no significant challenge to any safety system;
- No changes, which require compliance with more recent industry codes and standards, are being requested;
- Limited hardware modifications are required to meet safety requirements, and any modification to power generation equipment will be implemented per 10 CFR 50.59; and
- The UFSAR will be updated for the EPU related changes, after EPU is implemented, per the requirements in 10 CFR 50.71(e).

1 INTRODUCTION

1.1 Report Approach

This report summarizes the results of safety evaluations that were performed to justify uprating the licensed thermal power at PBAPS. The requested license power is an increase to 3951 MWt from the current licensed reactor thermal power (CLTP) of 3514 MWt.

GE-Hitachi Nuclear Energy Americas LLC (GEH) has previously developed and implemented EPU at several nuclear power plants. Based on EPU experience, GEH has developed an approach to uprating reactor power that maintains the current plant maximum normal operating reactor dome pressure. This approach is referred to as CPPU and is contained in the LTR NEDC-33004P-A, Revision 4, "Constant Pressure Power Uprate," (Reference 1) hereafter referred to as the "CLTR." The NRC approved the CLTR in the staff Safety Evaluation Report (SER) contained in Reference 1 for BWR plants containing GE fuel types through GE14 and using GEH accident analysis methods. The PBAPS Unit 2 Cycle 19 and Unit 3 Cycle 19 core designs contain only GE fuel types, through and including GNF2, and this evaluation uses only GEH accident analysis methods. By performing the power uprate in accordance with the CLTR and within the constraints of the NRC SER, the evaluation scope of the plant safety analyses and system performance is reduced, thus allowing for a more streamlined process.

Because PBAPS uses GNF2 fuel, the CLTR is not applicable for fuel design dependent evaluations and the transients performed in support of the generic disposition in the CLTR are not applicable. Therefore, for fuel-dependent topics, this report follows the NRC-approved generic content for EPU licensing reports, as described in Section 3.0 and Appendices A & B of the "Generic Guidelines for General Electric Boiling Water Reactor Extended Power Uprate," (Reference 2) hereafter referred to as ELTR1, and the NRC staff position letter reprinted in ELTR1. The analytical methodologies used for Emergency Core Cooling System (ECCS) - Loss-of-Coolant Accident (LOCA) evaluations and transient evaluations are documented in Appendices D and E, respectively in ELTR1.

This evaluation justifies an EPU to 3951 MWt, which corresponds to 120% of the original licensed thermal power (OLTP) for PBAPS. This report is presented in a format consistent with the template SER contained in Section 3.2 of the US NRC, Office of Nuclear Reactor Regulation, Review Standard for Extended Power Uprates, RS-001, December 2003 (Reference 3). The Regulatory Evaluations from the template SER have been modified to reflect the licensing basis of PBAPS.

1.1.1 Generic Assessments

Many of the component, system, and performance evaluations contained within this report have been generically evaluated in the CLTR and the "Generic Evaluations of General Electric Boiling Water Reactor Extended Power Uprate," (Reference 4) hereafter referred to as ELTR2, and found to be acceptable by the NRC. The plant-specific applicability of these generic

assessments is identified and confirmed in the applicable sections of this report. Generic assessments are those safety evaluations that can be dispositioned for a group or all BWR plants by:

- A bounding analysis for the limiting conditions,
- Demonstrating that there is a negligible effect due to EPU, or
- Demonstrating that the required plant cycle-specific reload analyses are sufficient and appropriate for establishing the EPU licensing basis.

Bounding analyses may be based on either: (1) a demonstration that assessments provided in previous EPU LTRs that included a pressure increase (References 2 and 4) are bounding; or (2) on specific generic studies provided in the CLTR. For these bounding analyses, the current EPU experience is provided in the CLTR, ELTR1, and ELTR2, along with the basis and results of the assessment. For those EPU assessments having a negligible effect, the current EPU experience plus a phenomenological discussion of the basis for the assessment is provided in the CLTR. For generic assessments that are GNF2 fuel design dependent, the assessments contained in ELTR1 and ELTR2 are applicable and analyzed with GEH methodology.

Some of the safety evaluations affected by EPU are fuel cycle (reload) dependent. Reload dependent evaluations require that the reload fuel design, core loading pattern, and operational plan be established so that analyses can be performed to establish core operating limits. The reload analysis demonstrates that the core design for EPU meets the applicable NRC evaluation criteria and limits documented in Reference 5. Because of the lead-time required for the NRC review of this power uprate submittal, the PBAPS reload core design for the initial fuel cycle at uprated power are not established at the time of this submittal.

As discussed in Section 2.8.2, the EPU has a relatively small effect on core operating and safety limits. Therefore, the reload fuel design and core loading pattern dependent plant evaluations for EPU operations are performed with the reload analysis as part of the standard reload licensing process. No plant can implement a power uprate unless the appropriate reload core analysis is performed and all criteria and limits documented in Reference 5 are satisfied. Otherwise, the plant would be in an unanalyzed condition. Based on current requirements, the reload analysis results are documented in the Supplemental Reload Licensing Report (SRLR), and the applicable core operating limits are documented in the plant-specific Core Operating Limits Report (COLR).

1.1.2 Plant-Specific Evaluation

Plant-specific evaluations are assessments of the principal evaluations that are not addressed by the generic assessments described in Section 1.1.1. The relative effect of EPU on the plant-specific evaluations and the methods used for their performance are provided in this report. Where applicable, the assessment methodology is referenced. If a specific computer code is used, the name of this computer code is provided in the subsection. Table 1-1 provides a summary of the computer codes used.

The plant-specific evaluations performed and reported in this document use plant-specific values to model the actual plant systems, transient response, and operating conditions. These plant-specific analyses are considered reload independent and are performed using a conservative core representative of PBAPS design for operation at 120% of OLTP for a cycle length of 24 months.

1.2 Purpose and Approach

An increase in electrical output of a BWR is accomplished primarily by generation and supply of higher steam flow to the T-G. Most BWRs, as originally licensed, have an as-designed equipment and system capability to accommodate steam flow rates at least 5% above the original rating. In addition, continuing improvements in the analytical techniques (computer codes) based on several decades of BWR safety technology, plant performance feedback, operating experience (OE), and improved fuel and core designs have resulted in significant increases in the design and operating margins between the calculated safety analyses results and the current plant licensing limits. The available margins in calculated results, combined with the as-designed excess equipment, system, and component capabilities (1) have allowed many BWRs to increase their thermal power ratings by 5% without any Nuclear Steam Supply System (NSSS) hardware modification, and (2) provide for power increases up to 20% with some non-safety hardware modifications. These power increases involve no significant increase in the hazards presented by the plants as approved by the NRC in the original license.

The method for achieving higher power is to extend the power/flow map (Figure 1-1) along the Maximum Extended Load Line Limit Analysis (MELLLA) line. However, there is no increase in the maximum normal operating reactor vessel dome pressure or the maximum licensed core flow over their pre-EPU values. EPU operation does not involve increasing the maximum normal operating reactor vessel dome pressure, because the plant, after modifications to non-safety power generation equipment, has sufficient pressure control and turbine flow capabilities to control the inlet pressure conditions at the turbine.

1.2.1 Uprate Analysis Basis

PBAPS is currently licensed at the 100% CLTP level of 3,514 MWt. The EPU RTP level included in this evaluation is 120% of the OLTP. Plant-specific EPU parameters are listed in Table 1-2. The EPU safety analyses are based on a power level of 1.02 times the EPU power level unless the Regulatory Guide (RG) 1.49 (Reference 6) two percent power factor (PF) is already accounted for in the analysis methods consistent with the methodology described in Reference 5, or RG 1.49 does not apply (e.g., Anticipated Transient Without Scram (ATWS) and Station Blackout (SBO) events).

1.2.2 Computer Codes

NRC-approved or industry-accepted computer codes and calculational techniques are used to demonstrate compliance with the applicable regulatory acceptance criteria. The application of these codes to the EPU analyses complies with the limitations, restrictions, and conditions specified in the approving NRC SER where applicable for each code. The limitations on use of these codes and methods as defined in the NRC staff position letter reprinted in ELTR1 and the

NRC SER for ELTR2 were followed for this EPU analysis. Any exceptions to the use of the code or conditions of the applicable SERs are noted in Table 1-1. The application of the computer codes in Table 1-1 is consistent with the current PBAPS licensing basis except where noted in this report.

1.2.3 Approach

The planned approach to achieving the higher power level consists of the change to the PBAPS licensing and design basis to increase the licensed power level to 3,951 MWt, consistent with the approach outlined in the CLTR, except as specifically noted in this report, and with the approach outlined in ELTR1 for fuel-dependent evaluations. Consistent with the CLTR, the following plant-specific exclusions are exercised:

- No increase in maximum normal operating reactor dome pressure
- No increase to maximum licensed core flow
- No increase to currently licensed MELLLA upper boundary
- No change to source term methodology
- No new fuel product line introduction
- No change to fuel cycle length
- No additions to currently licensed operational enhancements

The plant-specific evaluations are based on a review of plant design and operating data, as applicable, to confirm excess design capabilities; and, if necessary, identify required modifications associated with EPU. All changes to the plant-licensing basis have been identified in this report. For specified topics, generic analyses and evaluations in the CLTR, or ELTR1 and ELTR2 as applicable, demonstrate plant operability and safety. The dispositions in the CLTR are based on a 20% increase of OLTP, which is equal to the requested power uprate for PBAPS. For this increase in power, the conclusions of system/component acceptability stated in the CLTR and ELTR2 are bounding and have been confirmed for PBAPS. The scope and depth of the evaluation results provided herein are established based on the approach in the CLTR and ELTR2 and unique features of the plant. The results of the following evaluations are presented in this report:

- **Reactor Core and Fuel Performance:** Specific analyses required for EPU have been performed for a representative fuel cycle with the reactor core operating at EPU conditions. Specific core and fuel performance parameters are evaluated and documented each operating cycle, and will continue to be evaluated and documented for the operating cycles that implement EPU.
- **Reactor Coolant System (RCS) and Connected Systems:** Evaluations of the NSSS components and systems have been performed at EPU conditions. These evaluations confirm the acceptability of the effects of the higher power and the associated change in process variables (i.e., increased steam and feedwater (FW) flows). Safety-related

equipment performance is the primary focus in this report, but key aspects of reactor operational capability are also included.

- **Engineered Safety Feature Systems:** The effects of EPU power operation on the Containment, ECCS, Standby Gas Treatment System (SGTS) and other ESFs have been evaluated for key events. The evaluations include the containment responses during limiting Anticipated Operational Occurrences (AOOs) and special events, LOCA, and safety relief valve (SRV) containment dynamic loads.
- **Instrumentation and Control (I&C):** The I&C signal ranges and analytical limits (ALs) for setpoints have been evaluated to establish the effects of the changes in various process parameters such as power, neutron flux, steam flow and FW flow. As required, evaluations have been performed to determine the need for any Technical Specification (TS) allowable value (AV) changes for various functions (e.g., main steam line (MSL) high flow isolation setpoints).
- **Electrical Power and Auxiliary Systems:** Evaluations have been performed to establish the operational capability of the plant electrical power and distribution systems and auxiliary systems to ensure that they are capable of supporting safe plant operation at the EPU power level.
- **Power Conversion Systems:** Evaluations have been performed to establish the operational capability of various non-safety BOP systems and components to ensure that they are capable of delivering the increased power output, and/or the modifications necessary to obtain full EPU power.
- **Radwaste Systems and Radiation Sources:** The liquid and gaseous waste management systems (GWMSs) have been evaluated at limiting conditions for EPU to show that applicable release limits continue to be met during operation at higher power. The radiological consequences have been evaluated for EPU to show that applicable regulations have been met for the EPU power conditions. This evaluation includes the effect of higher power level on source terms, on-site doses and off-site doses, during normal operation.
- **Reactor Safety Performance Evaluations:** The limiting UFSAR analyses for design basis events have been addressed as part of the EPU evaluation. All limiting accidents, AOOs, and special events have been analyzed or generically dispositioned consistent with the CLTR, or with ELTR1 and ELTR2, as applicable, and show continued compliance with regulatory requirements.
- **Additional Aspects of EPU:** High-energy line break (HELB) and environmental qualification (EQ) evaluations have been performed at bounding conditions for EPU to show the continued operability of plant equipment under EPU conditions. The effects of EPU on the PBAPS Probabilistic Risk Assessment (PRA) have been analyzed to demonstrate that there are no new vulnerabilities to severe accidents.

1.3 EPU Plant Operating Conditions

1.3.1 Reactor Heat Balance

The operating pressure, the total core flow, and the coolant thermodynamic state characterize the thermal hydraulic performance of a BWR reactor core. The EPU values of these parameters are used to establish the steady state operating conditions and as initial and boundary conditions for the required safety analyses. The EPU values for these parameters are determined by performing heat (energy) balance calculations for the reactor system at EPU conditions.

The reactor heat balance relates the thermal-hydraulic parameters to the plant steam and FW flow conditions for the selected core thermal power level and operating pressure. Operational parameters from actual plant operation are considered (e.g., steam line pressure drop) when determining the expected EPU conditions. The thermal-hydraulic parameters define the conditions for evaluating the operation of the plant at EPU conditions. The thermal-hydraulic parameters obtained for the EPU conditions also define the steady state operating conditions for equipment evaluations. Heat balances at appropriately selected conditions define the initial and boundary conditions for plant safety analyses.

Figure 1-2 shows the EPU heat balance at 100% of EPU RTP and 100% rated core flow. Figure 1-3 shows the EPU heat balance at 102% of EPU RTP and 110% core flow with dome pressure at 1068 psia.

Table 1-2 provides a summary of the reactor thermal-hydraulic parameters for the current rated and EPU conditions. At EPU conditions, the maximum nominal operating reactor vessel dome pressure is maintained at the current value, which minimizes the need for plant and licensing changes. With the increased steam flow and associated non-safety BOP modifications, the current dome pressure provides sufficient operating turbine inlet pressure to assure good pressure control characteristics.

1.3.2 Reactor Performance Improvement Features

The reactor performance improvement features and the equipment allowed to be out-of-service (OOS) are listed in Table 1-2. When limiting, the input parameters related to the performance improvement features or the equipment OOS have been considered in the safety analyses for EPU, and as applicable, will be included in the reload core analyses. The use of these performance improvement features and allowing for equipment OOS are allowed during EPU operation. Where appropriate, the evaluations that are dependent upon cycle length are performed for EPU assuming a 24-month fuel cycle length.

1.4 Summary and Conclusions

This evaluation has covered an EPU to 120% of OLTP. The strategy for achieving higher power is to extend the MELLLA power/flow map region along the upper boundary extension.

The PBAPS licensing bases have been reviewed to demonstrate how this uprate can be accommodated without a significant increase in the probability or consequences of an accident

previously evaluated, without creating the possibility of a new or different kind of accident from any accident previously evaluated, and without exceeding any existing regulatory limits or design allowable limits applicable to the plant which might cause a reduction in a margin of safety. The EPU described herein involves no significant hazard consideration.

Table 1-1 Computer Codes Used For EPU

Task	Computer Code*	Version or Revision	NRC Approved	Comments
Nominal Reactor Heat Balance	ISCOR	09	Y(2)	NEDE-24011P Rev. 0 SER
Power/Flow Map	ISCOR	09	Y(2)	NEDE-24011P Rev. 0 SER
Reactor Core and Fuel Performance	TGBLA PANACEA ISCOR	06 11 09	Y Y Y(2)	NEDE-30130-P-A (4) NEDE-30130-P-A (4) NEDE-24011P Rev. 0 SER
Thermal Hydraulic Stability	ISCOR PANACEA ODYSY TRACG	09 11 05 04	Y(2) Y Y N(15)	NEDE-24011P Rev. 0 SER NEDE-30130-P-A (4) NEDE-33213P-A NEDO-32465-A
Reactor Pressure Vessel (RPV) Fluence	TGBLA DORTG	06 01	Y N	(14) (12) and (13)
Reactor Internal Pressure Differences (RIPDs)	ISCOR LAMB TRACG	09 07 02	Y(2) (3) Y	NEDE-24011P Rev. 0 SER NEDE-20566-P-A NEDE-32176P Rev. 2 NEDC-32177P Rev. 2 NRC TAC No. M90270
Reactor Vessel Integrity – Stress and Fatigue Evaluation	ANSYS FatiguePro ANSYS Mechanical-APDL and PrepPost VESLFAT PIPEFAT	11 3.0 12.1 x64 2.0 1.03	N N(17) N(17) N(17) N(17)	(1) (17) (17) (17) (17)
RPV Fluid Induced Vibration	ANSYS	11	N	(1)
Reactor Recirculation System (RRS)	BILBO	04V	N/A	NEDE-23504, February 1977 (1)
Reactor Coolant Pressure Boundary Piping	ME-101	N9/ May 2004	N	(9)
Piping Components Flow Induced Vibration (FIV)	SAP4G07	07	N	GE NEDO-10909 (1)
Transient Analysis	PANACEA ISCOR ODYN SAFER TASC	11 09 10 04 03	Y Y(2) Y (5) Y	NEDE-30130-P-A, NEDE-24011-P-A (4) NEDE-24011P Rev. 0 SER NEDO-24154-A NEDE-23785-1-PA, Rev.1; NEDC-30996P-A (8) (10) NEDC-32084P-A Rev. 2

Task	Computer Code*	Version or Revision	NRC Approved	Comments
Anticipated Transient Without Scram	ODYN STEMP PANACEA ISCOR TASC	10 04 11 09 03	Y (6) Y(4) Y(2) Y	NEDE-24154P-A Supp. 1, Vol. 4 NEDE-30130-P-A NEDE-24011P Rev. 0 SER NEDC-32084P-A Rev. 2 (11)
Containment System Response	SHEX M3CPT LAMB	06 05 08	Y Y (3)	(7) NEDO-10320, Apr. 1971 (NUREG-0661) NEDE-20566-P-A September 1986
Annulus Pressurization (AP)	ISCOR	09	Y(2)	NEDE-24011P Rev. 0 SER
Appendix R Fire Protection	GESTR SAFER SHEX	08 04 06	(5) (5) Y	NEDE-23785-1-PA Rev. 1 (8) (10) (7)
Decay Heat for Spent Fuel Pool Heat Load	TGBLA PANACEA DECAY	06 11 1	Y(4) Y(4) N(1)	NEDE-30130-P-A NEDE-30130-P-A Based on ANSI/ANS-5.1-1979.
ECCS-LOCA	LAMB GESTR SAFER ISCOR TASC	08 08 04 09 03	Y Y Y Y(2) Y	NEDO-20566A NEDE-23785-1-PA Rev. 1 (8) (10) NEDE-24011P Rev. 0 SER NEDC-32084P-A Rev. 2 (11)
Fission Product Inventory	ORIGEN	2.1	N(16)	Isotope Generation and Depletion Code
Station Blackout	SHEX	06A	Y	(7)
Accident Radiological Analysis	RADTRAD PAVAN	1998/1999/ 2002 02	Y Y	NUREG/CR-6604 Oak Ridge National Labratory

* The application of these codes to the EPU analyses complies with the limitations, restrictions, and conditions specified in the approving NRC SER where applicable for each code. The application of the codes also complies with the SERs for the EPU programs.

(1) Not a safety analysis code that requires NRC approval. The code application is reviewed and approved by GEH for "Level-2" application and is part of GEH's standard design process. Also, the application of this code has been used in previous power uprate submittals.

(2) The ISCOR code is not approved by name. However, the SER supporting approval of NEDE-24011P Rev. 0 by the May 12, 1978 letter from D. G. Eisenhut (NRC) to R. Gridley (GE) finds the models and methods acceptable, and mentions the use of a digital computer code. The referenced digital computer code is ISCOR. The use of ISCOR to

provide core thermal-hydraulic information in RIPDs, Transient, ATWS, Stability, Reactor Core and Fuel Performance and LOCA applications is consistent with the approved models and methods.

(3) The LAMB code is approved for use in ECCS-LOCA applications (NEDE-20566-P-A and NEDO-20566A), but no approving SER exists for the use of LAMB in the evaluation of RIPDs or containment system response. The use of LAMB for these applications is consistent with the model description of NEDE-20566-P-A.

(4) The physics code PANACEA provides inputs to the transient code ODYN. The improvements to PANACEA that were documented in NEDE-30130-P-A were incorporated into ODYN by way of Amendment 11 of GESTAR II (NEDE-24011-P-A). The use of TGBLA Version 06 and PANACEA Version 11 in this application was initiated following approval of Amendment 26 of GESTAR II by letter from S.A. Richards (NRC) to G.A. Watford (GE) Subject: "Amendment 26 to GE Licensing Topical Report NEDE-24011-P-A, GESTAR II Implementing Improved GE Steady-State Methods," (TAC NO. MA6481), November 10, 1999.

TGBLA06 with Error Correction 6 was used in the PBAPS Core Design analysis and it meets the requirements established by the Safety Evaluation for Licensing Topical Report NEDC-33173P (Reference 7).

(5) The ECCS-LOCA codes are not explicitly approved for Transient or Appendix R usage. The staff concluded that SAFER is qualified as a code for best estimate modeling of loss-of-coolant accidents and loss of inventory events via the approval letter and evaluation for NEDE-23785P, Revision 1, Volume II. (Letter, C. O. Thomas (See NRC) to J. F. Quirk (GE), "Review of NEDE-23785-1 (P), "GESTR-LOCA and SAFER Models for the Evaluation of the Loss-of-Coolant Accident, Volumes I and II," August 29, 1983.) In addition, the use of SAFER in the analysis of long term Loss-of-Feedwater (LOFW) events is specified in the approved LTRs for power uprate: "Generic Guidelines for General Electric Boiling Water Reactor Extended Power Uprate," NEDC-32424P-A, February 1999 and "Generic Evaluations of General Electric Boiling Water Reactor Extended Power Uprate," NEDC-32523P-A, February 2000. The Appendix R events are similar to the LOFW and small break LOCA events.

(6) The STEMP code uses fundamental mass and energy conservation laws to calculate the suppression pool heatup. The use of STEMP was noted in NEDE-24222, "Assessment of BWR Mitigation of ATWS, Volume I & II (NUREG-0460 Alternate No. 3) December 1, 1979." The code has been used in ATWS applications since that time. It has also recently been accepted in the NRC review of NEDC-33270, "GNF2 Advantage Generic Compliance with NEDE-24011-P-A (GESTAR II)." There is no formal NRC review and approval of STEMP.

(7) The application of the methodology in the SHEX code to the containment response is approved by the NRC in the letter to G. L. Sozzi (GE) from A. Thadani (NRC), "Use of the SHEX Computer Program and ANSI/ANS 5.1-1979 Decay Heat Source Term for Containment Long-Term Pressure and Temperature Analysis," July 13, 1993 (Reference 8).

(8) Letter, Richard E. Kingston (GEH) to NRC, "Transmittal of Revision 1 of NEDC-32950, Compilation of Improvements to GENE's SAFER ECCS-LOCA Evaluation Model," MFN 07-406, July 31, 2007.

(9) ME-101 is a Bechtel Corporation linear elastic analysis of piping program used by Exelon for analysis of the main steam (MS) piping. ME-101 is not a safety analysis code that requires NRC approval. Exelon validation and verification of the ME-101 program and related approval data is stored in Exelon APPID Number EX0006876.

(10) "SAFER Model for Evaluation of Loss-of-Coolant Accidents for Jet Pump and Non-Jet Pump Plants," NEDE-30996P-A, General Electric Company, October 1987.

(11) The NRC approved the TASC-03A code by letter from S. A. Richards (NRC) to J. F. Klapproth (GE Nuclear Energy), Subject: "Review of NEDC-32084P, TASC-03A, A Computer Code for Transient Analysis of a Single Fuel Channel," TAC NO. MB0564, March 13, 2002.

(12) CCC-543, "TORT-DORT Two-and Three-Dimensional Discrete Ordinates Transport Version 2.8.14," Radiation Shielding Information Center (RSIC), January 1994.

(13) Letter, H. N. Berkow (USNRC) to G. B. Stramback (GE), "Final Safety Evaluation Regarding Removal of Methodology Limitations for NEDC-32983P-A, General Electric Methodology for Reactor Pressure Vessel Fast Neutron Flux Evaluations (TAC No. MC3788)," November 17, 2005.

(14) Letter, S.A. Richards (USNRC) to G. A. Watford (GE), "Amendment 26 to GE Licensing Topical Report NEDE-24011-P-A, GESTAR II – Implementing Improved GE Steady-State Methods (TAC No. MA6481)," November 10, 1999.

(15) TRACG02 has been approved in NEDO-32465-A by the US NRC for the stability Delta CPR over Initial CPR Versus Oscillation Magnitude (DIVOM) analysis. The CLTP stability analysis is based on TRACG04, which has been shown to provide essentially the same or more conservative results in DIVOM applications as the previous version, TRACG02.

(16) The use of ORIGEN 2.1 to calculate the core source term is accepted for use per Section 3.1 of Regulatory Guides 1.183 and 1.195. NRC approval requires the review (and approval) of a licensing topical report (LTR) regarding the use of ORIGEN 2.1 for certain applications.

(17) Software used for Environmental Assisted Fatigue analysis. Results of these codes have been reviewed by the NRC in previous industry analysis.

Table 1-2 Current and EPU Plant Operating Conditions

Parameter	Current Licensed Value[1]	EPU Value[4]
Thermal Power (MWt)	3514	3951
Vessel Steam Flow (Mlb/hr) [2]	14.387	16.171
Full Power Core Flow Range		
Mlb/hr	84.87 to 112.75	101.48 to 112.75
% Rated	82.8 to 110.0	99.0 to 110.0
Maximum Nominal Dome Pressure (psia)	1050	1050
Maximum Nominal Dome Temperature (°F)	550.5	550.5
Pressure at Upstream Side of Turbine Stop Valve (TSV) (psia)	994	979
Full Power FW		
Flow (Mlb/hr)	14.355	16.139
Temperature (°F)	381.5	381.5
Core Inlet Enthalpy (BTU/lb) [3]	524.3	521.6

Notes:

1. Based on current reactor heat balance.
2. At normal FW heating.
3. At 100% core flow conditions.
4. Performance improvement features and/or equipment OOS that are included in EPU evaluations:
   a. Maximum Extended Load Line Limit Analysis (MELLLA)
   b. Increased Core Flow (ICF)
   c. Single-loop Operation (SLO)
   d. Final Feedwater Temperature Reduction (FFWTR), 90°F Temperature Reduction
   e. Turbine Bypass Valves OOS (TBVOOS)
   f. End-of-Cycle (EOC) Recirculation Pump Trip (EOC RPT) OOS (RPTOOS)
   g. Feedwater Heaters Out-of-Service (FWHOOS), 55°F Temperature Reduction
   h. 24 Month Cycle

Figure 1-1 Power/Flow Operating Map for EPU

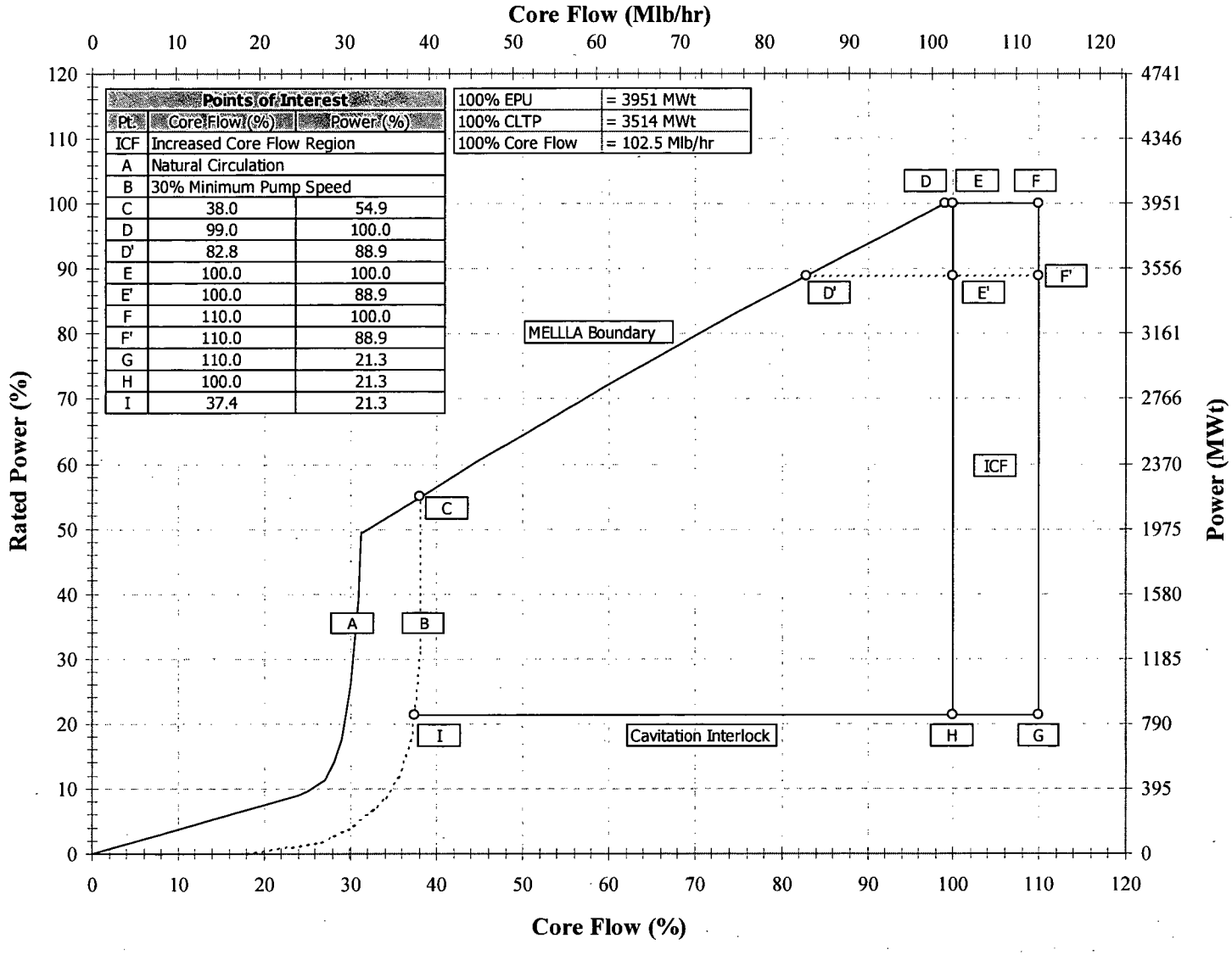

Points of Interest		
Pt.	Core Flow (%)	Power (%)
ICF	Increased Core Flow Region	
A	Natural Circulation	
B	30% Minimum Pump Speed	
C	38.0	54.9
D	99.0	100.0
D'	82.8	88.9
E	100.0	100.0
E'	100.0	88.9
F	110.0	100.0
F'	110.0	88.9
G	110.0	21.3
H	100.0	21.3
I	37.4	21.3

100% EPU	= 3951 MWt
100% CLTP	= 3514 MWt
100% Core Flow	= 102.5 Mlb/hr

Figure 1-2 EPU Heat Balance – Nominal

(@ 100% Power and 100% Core Flow)

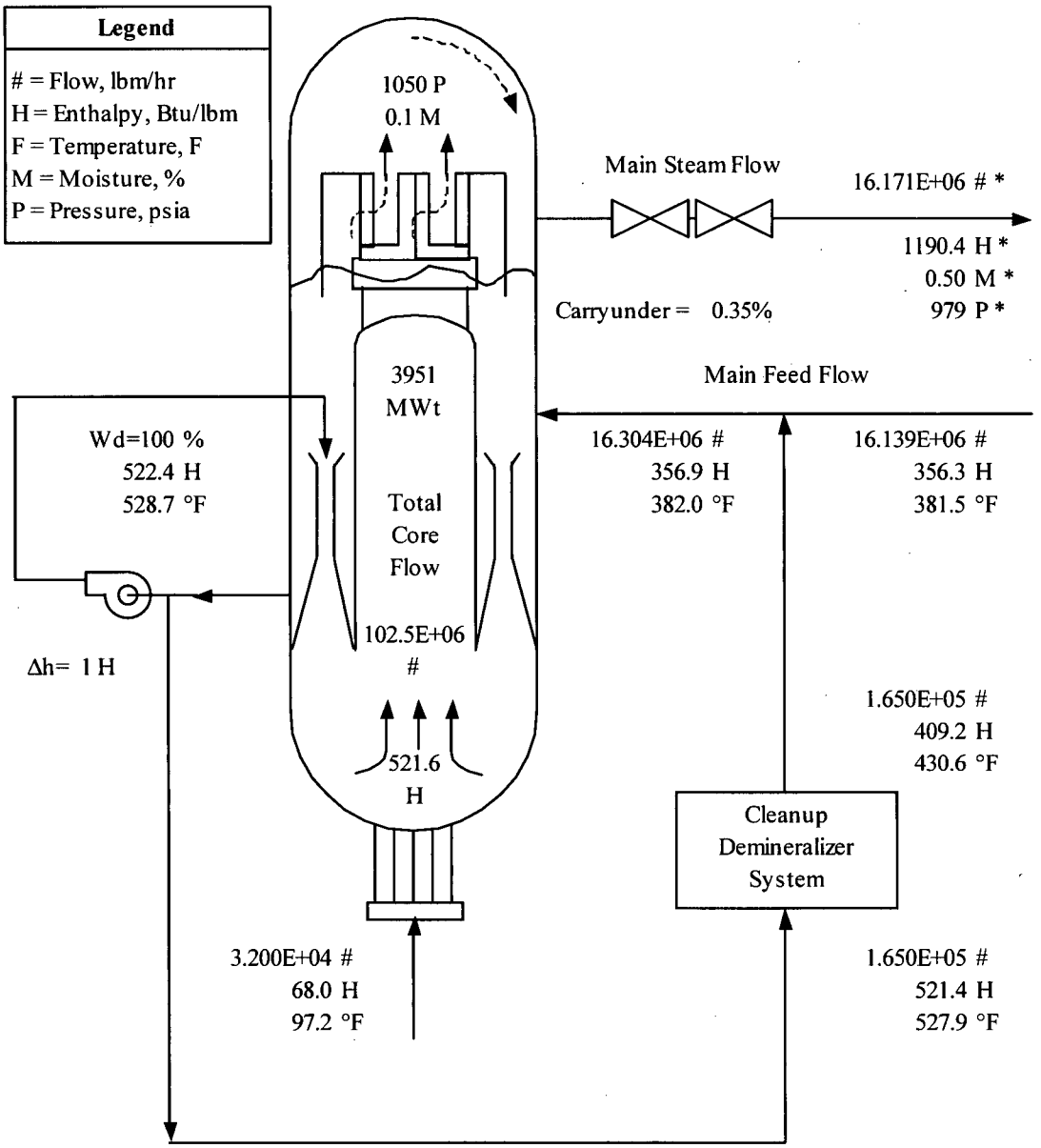

*Conditions at upstream side of TSV

Core Thermal Power	3951.0
Pump Heating	10.5
Cleanup Losses	-5.4
Other System Losses	-0.6
Turbine Cycle Use	3955.5 MWt

Figure 1-3 EPU Heat Balance - Overpressure Protection Analysis

(@ 102% Power and 110% Core Flow)

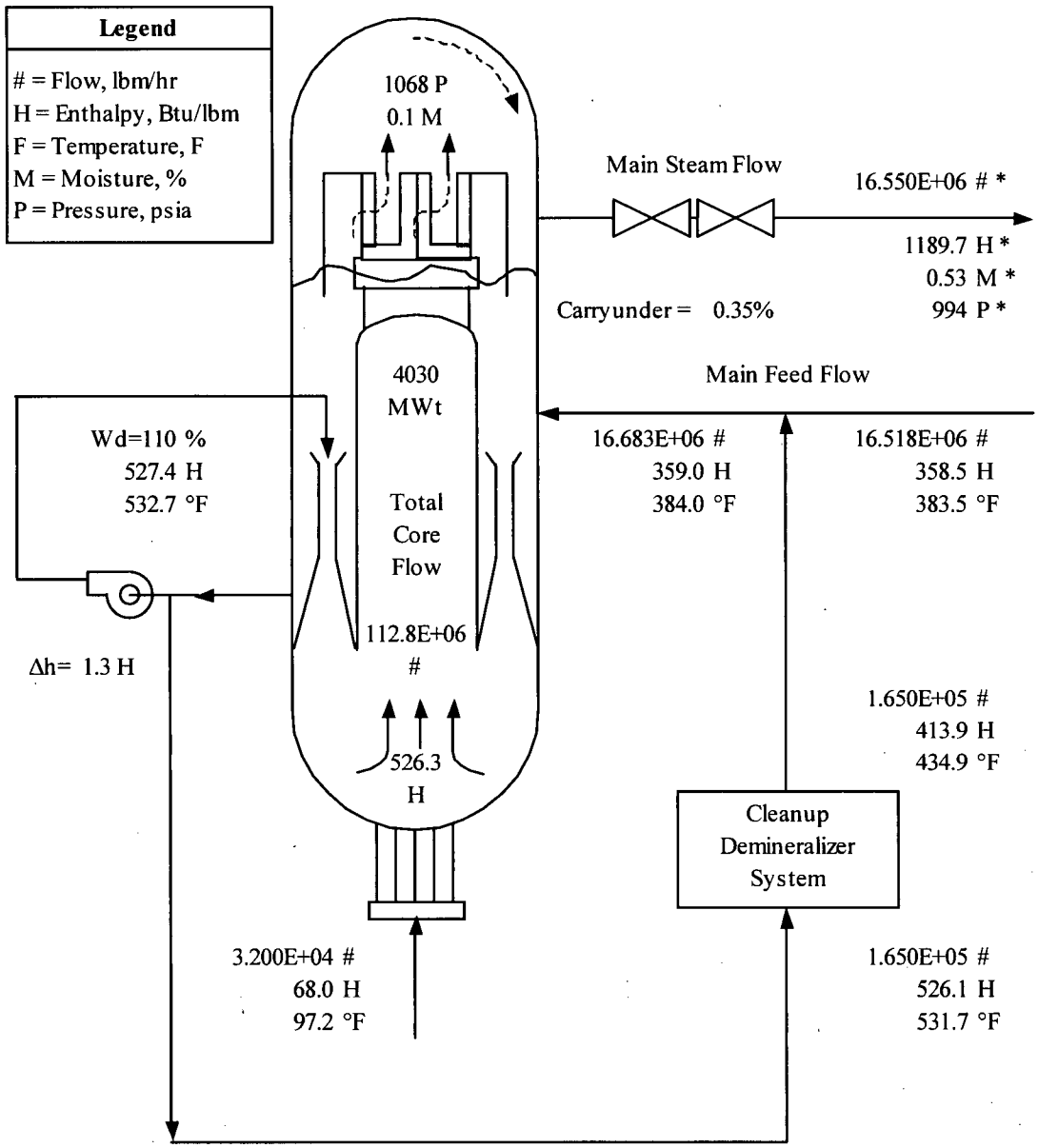

*Conditions at upstream side of TSV

Core Thermal Power	4030.0
Pump Heating	14.0
Cleanup Losses	-5.4
Other System Losses	-0.6
Turbine Cycle Use	4038.0 MWt

2 SAFETY EVALUATION

2.1 Materials and Chemical Engineering

2.1.1 Reactor Vessel Material Surveillance Program

Regulatory Evaluation

The reactor vessel material surveillance program provides a means for determining and monitoring the fracture toughness of the reactor vessel beltline materials to support analyses for ensuring the structural integrity of the ferritic components of the reactor vessel. The review primarily focused on the effects of the proposed EPU on the reactor vessel surveillance capsule withdrawal schedule. The regulatory acceptance criteria are based on: (1) General Design Criterion (GDC)-14, insofar as it requires the reactor coolant pressure boundary (RCPB) be designed, fabricated, erected, and tested so as to have an extremely low probability of rapidly propagating fracture; (2) GDC-31, insofar as it requires the RCPB be designed with margin sufficient to assure that, under specified conditions, it will behave in a nonbrittle manner and the probability of a rapidly propagating fracture is minimized; (3) 10 CFR 50, Appendix H, which provides for monitoring changes in the fracture toughness properties of materials in the reactor vessel beltline region; and (4) 10 CFR 50.60, which requires compliance with the requirements of 10 CFR 50, Appendix H.

Peach Bottom Current Licensing Basis

The general design criteria listed in RS-001 are those currently specified in 10 CFR 50, Appendix A. The applicable PBAPS principal design criteria predate these criteria. The PBAPS principal design criteria are listed in UFSAR Section 1.5, "Principal Design Criteria." In 1967, the Atomic Energy Commission (AEC) published for public comment a revised set of proposed General Design Criteria (Federal Register 32 FR 10213 (Reference 9), July 11, 1967). Although not explicitly licensed to the AEC proposed General Design Criteria published in 1967, Philadelphia Electric Company (PECO), the predecessor to Exelon, performed a comparative evaluation of the design basis of PBAPS Units 2 and 3 against the AEC proposed General Design Criteria of 1967. The PBAPS UFSAR, Appendix H, "Conformance to AEC (NRC) Criteria," contains this comparative evaluation. UFSAR Appendix H provides a comparative evaluation with each of the groups of criteria set out in the July 1967 AEC release. As to each group of criteria, there is a statement of Exelon's understanding of the intent of the criteria in that group and a discussion of the plant design conformance with the intent of the group of criteria. Following a restatement of each of the proposed criteria is a list of references to locations in the PBAPS UFSAR where there is subject matter relating to the intent of that particular criteria.

For the current GDC listed in the Regulatory Evaluation above, the PBAPS comparative evaluation of the comparable 1967 AEC proposed General Design Criteria (referred to here as "Draft GDC") is contained in PBAPS UFSAR Appendix H: Draft GDC-9, Draft GDC-33, Draft GDC-34, Draft GDC-35, and Draft GDC-36.

The Reactor Vessel Material Surveillance Program is described in PBAPS UFSAR Section 4.2, "Reactor Vessel and Appurtenances Mechanical Design."

In addition to the evaluations described in the PBAPS UFSAR, PBAPS's systems and components were evaluated for license renewal. Systems and system component materials of construction, operating history, and programs used to manage aging effects were evaluated for plant license renewal and documented in the "Safety Evaluation Report Related to the License Renewal of Peach Bottom Atomic Power Station, Units 2 and 3," NUREG-1769, dated March 2003 (Reference 10). The license renewal evaluation associated with the Reactor Vessel Material Surveillance Program is documented in NUREG-1769, Section 3.0.3.20.

Technical Evaluation

The RPV fracture toughness evaluation process is described in Section 2.1.2. RPV embrittlement is caused by neutron exposure of the wall adjacent to the core including the regions above and below the core that experience fluence greater than or equal to 1×10^{17} n/cm^2. This region is defined as the "beltline" region. Operation at EPU conditions results in a higher neutron flux, which increases the integrated fluence over the period of plant life. For PBAPS at CLTP, a more conservative, bounding fluence was determined from dosimetry measurements. For EPU, more representative, theoretical, fluence calculations using NRC approved methodology (see Table 1-1) were performed. Therefore, EPU fluence is less than that considered for CLTP.

PBAPS is a participant in the Integrated Surveillance Program, currently administrated by the Electric Power Research Institute (EPRI). The PBAPS surveillance program consists of three (3) capsules. One capsule containing Charpy specimens was removed from the Unit 2 vessel after Cycle 7. After testing, a reconstituted capsule was prepared and installed in the vessel during Refueling Outage 8 (2RO8). Unit 2 is a representative host capsule in the Integrated Surveillance Program and is scheduled to remove the second capsule at 30 effective full power years (EFPY). The third Unit 2 capsule is a standby capsule. The remaining two capsules have been in the reactor vessel since plant startup.

One capsule containing Charpy specimens was removed from the Unit 3 vessel after Cycle 7 and tested. After testing, a reconstituted capsule was prepared and installed in the vessel during Refueling Outage 8 (3RO8). Unit 3 is not a representative host capsule in the Integrated Surveillance Program; the second and third Unit 3 capsules are standby capsules.

EPU has no effect on the existing surveillance schedule.

The maximum normal operating dome pressure for EPU is unchanged from that for CLTP thermal power operation. Therefore, the hydrostatic and leakage test pressures are acceptable for EPU. Operation with EPU does not have an adverse effect on the reactor vessel fracture toughness because the vessel remains in compliance with the regulatory requirements as demonstrated in Section 2.1.2.

Conclusion

The effects of the proposed EPU on the reactor vessel surveillance withdrawal schedule have been reviewed. Exelon concludes that the changes in neutron fluence and their effects on the schedule have been adequately addressed. Exelon further concludes the reactor vessel capsule withdrawal schedule is appropriate to ensure the material surveillance program will continue to meet the requirements of 10 CFR 50, Appendix H, and 10 CFR 50.60, and will provide Exelon with information to ensure continued compliance with the current licensing basis, in this respect following implementation of the proposed EPU. Therefore, Exelon has determined that the proposed EPU is acceptable with respect to the reactor vessel material surveillance program.

2.1.2 Pressure-Temperature Limits and Upper-Shelf Energy

Regulatory Evaluation

Pressure-temperature (P-T) limits are established to ensure the structural integrity of the ferritic components of the RCPB during any condition of normal operation, including AOOs and hydrostatic tests. The review of P-T limits covered the P-T limits methodology and the calculations for the number of effective full power years specified for the proposed EPU, considering neutron embrittlement effects and using linear elastic fracture mechanics. The regulatory acceptance criteria for P-T limits are based on: (1) GDC-14, insofar as it requires that the RCPB be designed, fabricated, erected, and tested so as to have an extremely low probability of rapidly propagating fracture; (2) GDC-31, insofar as it requires that the RCPB be designed with margin sufficient to assure that, under specified conditions, it will behave in a nonbrittle manner and the probability of a rapidly propagating fracture is minimized; (3) 10 CFR 50, Appendix G, which specifies fracture toughness requirements for ferritic components of the RCPB; and (4) 10 CFR 50.60, which requires compliance with the requirements of 10 CFR 50, Appendix G.

Peach Bottom Current Licensing Basis

The general design criteria listed in RS-001 are those currently specified in 10 CFR 50, Appendix A. The applicable PBAPS principal design criteria predate these criteria. The PBAPS principal design criteria are listed in UFSAR Section 1.5, "Principal Design Criteria." In 1967, the Atomic Energy Commission (AEC) published for public comment a revised set of proposed General Design Criteria (Federal Register 32 FR 10213 (Reference 9), July 11, 1967). Although not explicitly licensed to the AEC proposed General Design Criteria published in 1967, Philadelphia Electric Company (PECO), the predecessor to Exelon, performed a comparative evaluation of the design basis of PBAPS Units 2 and 3 against the AEC proposed General Design Criteria of 1967. The PBAPS UFSAR, Appendix H, "Conformance to AEC (NRC) Criteria," contains this comparative evaluation. UFSAR Appendix H provides a comparative evaluation with each of the groups of criteria set out in the July 1967 AEC release. As to each group of criteria, there is a statement of Exelon's understanding of the intent of the criteria in that group and a discussion of the plant design conformance with the intent of the group of criteria.

Following a restatement of each of the proposed criteria is a list of references to locations in the PBAPS UFSAR where there is subject matter relating to the intent of that particular criteria.

For the current GDC listed in the Regulatory Evaluation above, the PBAPS comparative evaluation of the comparable 1967 AEC proposed General Design Criteria (referred to here as "Draft GDC") is contained in PBAPS UFSAR Appendix H: Draft GDC-9, Draft GDC-33, Draft GDC-34, Draft GDC-35, and Draft GDC-36.

The Pressure-Temperature Limits and Upper Shelf Energy (USE) are described in PBAPS UFSAR Sections 4.2.3, "Reactor Vessel and Appurtenances Mechanical Design - Safety Design Basis," and 4.2.5, "Reactor Vessel and Appurtenances Mechanical Design - Safety Evaluation."

In addition to the evaluations described in the PBAPS UFSAR, PBAPS's systems and components were evaluated for license renewal. Systems and system component materials of construction, operating history, and programs used to manage aging effects were evaluated for plant license renewal and documented in the "Safety Evaluation Report Related to the License Renewal of Peach Bottom Atomic Power Station, Units 2 and 3," NUREG-1769, dated March 2003 (Reference 10). The license renewal evaluation associated with the Pressure-Temperature Limits and USE is documented in NUREG-1769, Section 4.2.

Technical Evaluation

NEDC-33004P-A, Revision 4, "Constant Pressure Power Uprate," Class III, July 2003 (also referred to as CLTR) was approved by the NRC as an acceptable method for evaluating the effects of CPPUs. Section 3.2.1 of the CLTR addresses the effect of CPPU on P-T Limits and USE. The results of this evaluation are described below.

As explicitly stated in Section 3.2.1 of the CLTR, EPU may result in a higher operating neutron flux at the vessel wall, consequently increasing the integrated flux over time (neutron fluence). The neutron fluence is recalculated using the NRC-approved GEH neutron fluence methodology (Reference 11). This method is consistent with RG 1.190 (Reference 12) and utilizes a more representative fluence than previous methods. PBAPS meets all CLTR dispositions. The topics addressed in this evaluation are:

Topic	CLTR Disposition	PBAPS Result
Fracture Toughness	[[ ]]	Meets CLTR Disposition

The revised fluence is used to evaluate the vessel against the requirements of 10 CFR 50, Appendix G. The results of these evaluations indicate that:

(a) The reduction in USE, using Equivalent Margin methods, demonstrates that there is an equivalent margin of safety against fracture for RPV material such that it will remain qualified with respect to 10 CFR 50 Appendix G criterion for the design life of the vessel.

The maximum decrease in USE for the beltline plate materials is 14.5% (< 23.5% plate limit) for 54 EFPY. The maximum decrease in USE for the beltline weld materials is 19.5% (< 39% weld limit) for 54 EFPY. These values are provided in Tables 2.1-1a and 2.1-1b.

(b) The beltline material reference temperature of nil-ductility transition (RT_{NDT}) remains below 200°F.

(c) The CLTP P-T curves remain bounding for EPU including the effects of the N16 Water Level Instrumentation Nozzle that occurs within the beltline region. The current adjusted reference temperature (ART) values for the beltline plates and welds remain bounding for EPU due to the conservative fluence previously considered.

(d) The 54 EFPY shift is decreased, and consequently, results in a decrease in the ART, which is the initial RT_{NDT} plus the shift. These values are provided in Tables 2.1-2a and 2.1-2b.

(e) The 54 EFPY beltline circumferential weld material RT_{NDT} remains bounded by the requirements of generic letter (GL) 98-05 (Reference 13), BWRVIP-05 (References 14 and 15), and BWRVIP 74-A (Reference 16). This comparison is provided in Tables 2.1-3a and 2.1-3b.

Therefore, PBAPS meets all CLTR dispositions for fracture toughness.

Conclusion

The effects of the proposed EPU on the P-T limits for the plant have been reviewed. Exelon concludes that the changes in neutron fluence and their effects on the P-T limits have been adequately addressed. Exelon further concludes it has demonstrated the validity of the EPU P-T limits for operation under the proposed EPU conditions. Based on this, Exelon concludes the EPU P-T limits will continue to meet the requirements of 10 CFR 50, Appendix G, and 10 CFR 50.60 and will enable PBAPS to continue to comply with the current licensing basis, following implementation of the proposed EPU. Therefore, Exelon finds the proposed EPU acceptable with respect to the EPU P-T limits.

2.1.3 Reactor Internal and Core Support Materials

Regulatory Evaluation

The reactor internals and core supports include structures, systems, and components (SSCs) that perform safety functions or whose failure could affect safety functions performed by other SSCs. These safety functions include reactivity monitoring and control, core cooling, and fission product confinement (within both the fuel cladding and the RCS). The review covered the materials' specifications and mechanical properties, welds, weld controls, non-destructive examination (NDE) procedures, corrosion resistance, and susceptibility to degradation. The regulatory acceptance criteria for reactor internal and core support materials are based on GDC-1 and 10 CFR 50.55a for material specifications, controls on welding, and inspection of reactor internals and core supports.

Peach Bottom Current Licensing Basis

The general design criteria listed in RS-001 are those currently specified in 10 CFR 50, Appendix A. The applicable PBAPS principal design criteria predate these criteria. The PBAPS principal design criteria are listed in UFSAR Section 1.5, "Principal Design Criteria." In 1967, the Atomic Energy Commission (AEC) published for public comment a revised set of proposed General Design Criteria (Federal Register 32 FR 10213 (Reference 9), July 11, 1967). Although not explicitly licensed to the AEC proposed General Design Criteria published in 1967, Philadelphia Electric Company (PECO), the predecessor to Exelon, performed a comparative evaluation of the design basis of PBAPS Units 2 and 3 against the AEC proposed General Design Criteria of 1967. The PBAPS UFSAR, Appendix H, "Conformance to AEC (NRC) Criteria," contains this comparative evaluation. UFSAR Appendix H provides a comparative evaluation with each of the groups of criteria set out in the July 1967 AEC release. As to each group of criteria, there is a statement of Exelon's understanding of the intent of the criteria in that group and a discussion of the plant design conformance with the intent of the group of criteria. Following a restatement of each of the proposed criteria is a list of references to locations in the PBAPS UFSAR where there is subject matter relating to the intent of that particular criteria.

For the current GDC listed in the Regulatory Evaluation above, the PBAPS comparative evaluation of the comparable 1967 AEC proposed General Design Criteria (referred to here as "Draft GDC") is contained in PBAPS UFSAR Appendix H: Draft GDC-1, Draft GDC-2, Draft GDC-6, Draft GDC-7, Draft GDC-13, Draft GDC-14, Draft GDC-44, and Draft GDC-60.

The Reactor Internal and Core Support Materials are described in PBAPS UFSAR Sections 3.3, "Reactor Vessel Internals Mechanical Design" and 4.2, "Reactor Vessel and Appurtenances Mechanical Design." Additionally, reference the NRC SER for the BWR Vessel and Internals Project (BWRVIP) submittal, "Safety Evaluation by the Office of Nuclear Reactor Regulation Request for Relief from In-service Inspection Requirements for Boiling Water Reactor Vessel and Internals," dated April 30, 2008 (Reference 17).

In addition to the evaluations described in the PBAPS UFSAR, PBAPS's systems and components were evaluated for license renewal. Systems and system component materials of construction, operating history, and programs used to manage aging effects were evaluated for plant license renewal and documented in the "Safety Evaluation Report Related to the License Renewal of Peach Bottom Atomic Power Station, Units 2 and 3," NUREG-1769, dated March 2003 (Reference 10). The license renewal evaluation associated with the Reactor Internal and Core Support Materials is documented in NUREG-1769, Sections 2.3.1.1 and 3.0.3.9.

Technical Evaluation

NEDC-33004P-A, Revision 4, "Constant Pressure Power Uprate," Class III, July 2003 (also referred to as CLTR) was approved by the NRC as an acceptable method for evaluating the effects of CPPUs. Section 10.7 of the CLTR addresses the effect of CPPU on Reactor Internal and Core Support Materials. The results of this evaluation are described below.

PBAPS meets all CLTR dispositions. The topics addressed in this evaluation are:

Topic	CLTR Disposition	PBAPS Result
Irradiation-Assisted Stress Corrosion Cracking	[[ ]]	Meets CLTR Disposition

As explicitly stated in Section 10.7 of the CLTR, the increase in irradiation of the core internal components influences irradiation-assisted stress corrosion cracking (IASCC). The longevity of most equipment is not affected by EPU. [[

]] is required for EPU.

The reactor internal and core support materials evaluation included the materials' specifications and mechanical properties, welds, weld controls, NDE procedures, corrosion resistance, and susceptibility to degradation. This evaluation of the reactor internals and core supports includes SSCs that perform safety functions or whose failure could affect safety functions performed by other SSCs. None of these requirements, specifications, or controls is changed as a result of the EPU; therefore, these continue to be acceptable.

PBAPS has a procedurally controlled program for the augmented NDE of selected RPV internal components in order to ensure their continued structural integrity. The inspection techniques utilized are primarily for the detection and characterization of service-induced, surface-connected planar discontinuities, such as intergranular stress corrosion cracking (IGSCC) and IASCC, in welds and in the adjacent base material. PBAPS belongs to the BWRVIP organization and implementation of the procedurally controlled program is consistent with the BWRVIP issued documents. The inspection strategies recommended by the BWRVIP consider the effects of fluence on applicable components and are based on component configuration and field experience.

Components selected for inspection include those that are identified as susceptible to in-service degradation and augmented examination is conducted for verification of structural integrity. These components have been identified through the review of NRC Inspection and Enforcement Bulletins (IEBs), BWRVIP documents, and recommendations provided by GEH Services Information Letters (SILs). The inspection program provides performance frequency for NDE and associated acceptance criteria. Components inspected include the following:

1. Core spray (CS) piping
2. Core plate
3. CS spargers
4. Core shroud and core shroud support
5. Jet pumps and associated components

6. Top guide
7. Lower plenum
8. Vessel Inside Diameter attachment welds
9. Instrumentation penetrations
10. FW spargers
11. In-core flux monitoring guide tubes
12. Control rod guide tubes (CRGTs)

Inspected components are considered as being potentially susceptible to IASCC if the end-of-life fluence is in excess of 5 x 10^{20} n/cm^2. Three components have been identified as being potentially susceptible to IASCC, based upon the projected 54 EFPY fluence: (1) Top Guide, 4.85 x 10^{22} n/cm^2; (2) Shroud, 3.56 x 10^{21} n/cm^2; and (3) Core Plate, 6.87 x 10^{20} n/cm^2. The BWRVIP inspection recommendations that provide the scope, sample size, inspection method, and frequency of examination used to manage the effects of IASCC are as follows:

- Top Guide (BWRVIP-26-A) (Reference 18)
- Shroud (BWRVIP-76-A) (Reference 19)
- Core Plate (BWRVIP-25) (Reference 20)

Continued implementation of the current procedure program assures the prompt identification of any degradation of reactor vessel internal components experienced during EPU operating conditions. To mitigate the potential for IGSCC and IASCC, PBAPS utilizes hydrogen water chemistry (HWC) and noble metals applications. Reactor vessel water chemistry conditions are also maintained consistent with the EPRI and established industry guidelines.

The service life of most equipment is not affected by EPU. The peak fluence increase experienced by the reactor internals does not represent a significant increase in the potential for IASCC. The current inspection strategy for the reactor internal components is expected to be adequate to manage any potential effects of EPU.

Therefore, PBAPS meets all CLTR dispositions for IASCC.

Conclusion

The effects of the proposed EPU on the susceptibility of reactor internal and core support materials to known degradation mechanisms have been reviewed. Exelon concludes the appropriate degradation management programs have been identified to address the effects of changes in operating temperature and neutron fluence on the integrity of reactor internal and core support materials. Exelon further concludes the reactor internal and core support materials will continue to be acceptable and will continue to meet the requirements of 10 CFR 50.55a and the current licensing basis, with respect to material specifications, welding controls, and inspection following implementation of the proposed EPU. Therefore, Exelon finds the proposed EPU acceptable with respect to reactor internal and core support materials.

2.1.4 Reactor Coolant Pressure Boundary Materials

Regulatory Evaluation

The RCPB defines the boundary of systems and components containing the high-pressure fluids produced in the reactor. The review of RCPB materials covered their specifications, compatibility with the reactor coolant, susceptibility to degradation, and degradation management programs. The regulatory acceptance criteria for RCPB materials are based on: (1) 10 CFR 50.55a and GDC-1, insofar as they require SSCs important to safety be designed, fabricated, erected, constructed, tested, and inspected to quality standards commensurate with the importance of the safety functions to be performed; (2) GDC-4, insofar as it requires that SSCs important to safety be designed to accommodate the effects of and to be compatible with the environmental conditions associated with normal operation, maintenance, testing, and postulated accidents; (3) GDC-14, insofar as it requires the RCPB be designed, fabricated, erected, and tested so as to have an extremely low probability of rapidly propagating fracture; (4) GDC-31, insofar as it requires the RCPB be designed with margin sufficient to assure that, under specified conditions, it will behave in a nonbrittle manner and the probability of a rapidly propagating fracture is minimized; and (5) 10 CFR 50, Appendix G, which specifies fracture toughness requirements for ferritic components of the RCPB.

Peach Bottom Current Licensing Basis

The general design criteria listed in RS-001 are those currently specified in 10 CFR 50, Appendix A. The applicable PBAPS principal design criteria predate these criteria. The PBAPS principal design criteria are listed in UFSAR Section 1.5, "Principal Design Criteria." In 1967, the Atomic Energy Commission (AEC) published for public comment a revised set of proposed General Design Criteria (Federal Register 32 FR 10213 (Reference 9), July 11, 1967). Although not explicitly licensed to the AEC proposed General Design Criteria published in 1967, Philadelphia Electric Company (PECO), the predecessor to Exelon, performed a comparative evaluation of the design basis of PBAPS Units 2 and 3 against the AEC proposed General Design Criteria of 1967. The PBAPS UFSAR, Appendix H, "Conformance to AEC (NRC) Criteria," contains this comparative evaluation. UFSAR Appendix H provides a comparative evaluation with each of the groups of criteria set out in the July 1967 AEC release. As to each group of criteria, there is a statement of Exelon's understanding of the intent of the criteria in that group and a discussion of the plant design conformance with the intent of the group of criteria. Following a restatement of each of the proposed criteria is a list of references to locations in the PBAPS UFSAR where there is subject matter relating to the intent of that particular criteria.

For the current GDC listed in the Regulatory Evaluation above, the PBAPS comparative evaluation of the comparable 1967 AEC proposed General Design Criteria (referred to here as "Draft GDC") is contained in PBAPS UFSAR Appendix H: Draft GDC-1, Draft GDC-2, Draft GDC-6, Draft GDC-9, Draft GDC-33, Draft GDC-34, Draft GDC-35, Draft GDC-40, and Draft GDC-42.

RCPB Materials are described in PBAPS UFSAR Sections 4.2, "Reactor Vessel and Appurtenances Mechanical Design," and 4.3, "Reactor Recirculation System."

In addition to the evaluations described in the PBAPS UFSAR, PBAPS's systems and components were evaluated for license renewal. Systems and system component materials of construction, operating history, and programs used to manage aging effects were evaluated for plant license renewal and documented in the "Safety Evaluation Report Related to the License Renewal of Peach Bottom Atomic Power Station, Units 2 and 3," NUREG-1769, dated March 2003 (Reference 10). The license renewal evaluation associated with the RCPB is documented in NUREG-1769, Sections 2.3.1, 3.1, 4.2, and 4.3.

Technical Evaluation

The temperature and flow increase experienced by the RCPB does not represent significant increase in the potential for IGSCC. Other degradation mechanisms are addressed in other sections of this report. Fracture Toughness of the vessel components is addressed in Section 2.1.2. Flow-Accelerated Corrosion (FAC) for the plant is addressed in Section 2.1.6. Material Fatigue usage for the RCPB piping is addressed in Section 2.2.2.2.1. Flow induced vibration (FIV) for the safety-related piping components is addressed in Section 2.2.2.1.3. Therefore, the current inspection strategy for the RCPB is adequate to manage any potential effects of EPU.

The PBAPS In-Service Inspection (ISI) program for RCPB piping is in accordance with American Society of Mechanical Engineers (ASME) Section XI coupled with the augmented program for reactor coolant piping based on GL 88-01 (Reference 21), NUREG-0313 (Reference 22) and BWRVIP-75-A (Reference 23). The inspection techniques utilized are in full conformance with ASME Section XI, Appendix VIII, Supplement 10, for the detection and characterization of service-induced, surface-connected planar discontinuities, such as IGSCC.

Continued implementation of the current program assures the prompt identification of any degradation of RCPB components experienced during EPU operating conditions.

The augmented inspection program is designed to detect potential degradation from IGSCC. For IGSCC to occur, three conditions must be present: (1) a susceptible material (the materials in the reactor coolant boundary for the vessel and nozzles can be found in Section 4.2.4 of the PBAPS UFSAR); (2) the presence of residual or applied tensile stress (such as from welding); and (3) aggressive environment. Operation at EPU conditions results in an insignificant change to temperature and flow conditions for portions of the RCPB piping and does not affect the other susceptibility factors associated with IGSCC. This is consistent with the conclusions presented in Section 3.6.1 of ELTR2.

The PBAPS augmented inspection program frequency is based on BWRVIP-75-A (Reference 23) normal water chemistry. While PBAPS has implemented HWC with noble metals, the augmented program includes more frequent inspections than those required by BWRVIP-75-A at this time for HWC. PBAPS has limited Category "D" and Category "E" welds. The Category "D" welds are not constructed from IGSCC resistant materials and the Category "E" welds are reinforced with a weld overlay and subsequently heat treated to mitigate

the effects of IGSCC. In both of these cases the welds are inspected in accordance with BWRVIP-75-A.

Several IGSCC mitigation processes have been applied to PBAPS to reduce the RCPB components' susceptibility to IGSCC. PBAPS was designed, fabricated, and constructed with IGSCC addressed in most welds by one of three methods: (1) corrosion resistant materials; (2) solution heat treatment; or (3) clad with resistant materials. For the weldments where these three processes were not used, stress improvement processes were applied to reduce IGSCC susceptibility. Stress improvement processes and original construction processes used for IGSCC resistance are not affected by EPU. Also, PBAPS has implemented HWC with noble metals, which reduces the potential for IGSCC of RCPB components.

Oxygen generation will be increased at EPU conditions due to increased radiolysis. IGSCC mitigation relies on the FW hydrogen concentration. The hydrogen injection rate of the HWC system at EPU conditions will be increased proportionally to the FW flow rate to compensate for the increased oxygen generation. The EPU FW hydrogen concentration will be the same as the CLTP FW hydrogen concentration. The EPU predicted injection rate is preliminary therefore testing/monitoring of the IGSCC mitigation parameters under the site chemistry programs at EPU conditions will be performed to obtain the required injection rate for IGSCC mitigation at EPU.

PBAPS Units 2 and 3 use the On-line NobleChem™ injection process. On-line NobleChem™ is used in conjunction with HWC injection to FW for IGSCC mitigation of piping and reactor internals. Exelon's corporate Strategic Water Chemistry Plan (Reference 24) and BWR Chemistry Optimization Program (Reference 25) are applied to PBAPS Units 2 and 3 are consistent with References 26 through 29, recommendations for water chemistry and the Experience Reports and Application guidelines for Noble Metal Chemical Addition (NMCA).

The primary parameters monitored for IGSCC mitigation at PBAPS are catalyst loading and electrochemical potential (ECP). The H2:O2 Molar Ratio (from the Rad/ECP model), hydrogen injection rate and reactor water oxygen concentration are secondary parameters monitored for IGSCC mitigation. MS oxygen concentration is not used as an indicator of IGSCC mitigation at PBAPS because it is not a good indicator, decreasing only ~20% over the low hydrogen injection rates used with NMCA.

Conclusion

The effects of the proposed EPU on the susceptibility of RCPB materials to known degradation mechanisms have been reviewed. Exelon concludes the appropriate degradation management programs have been identified to address the effects of changes in system operating temperature on the integrity of RCPB materials. Exelon further concludes the RCPB materials will continue to be acceptable following implementation of the proposed EPU and will continue to meet the requirements of 10 CFR 50, Appendix G, 10 CFR 50.55a, and the current licensing basis. Therefore, Exelon finds the proposed EPU acceptable with respect to RCPB materials.

2.1.5 Protective Coating Systems (Paints) - Organic Materials

Regulatory Evaluation

Protective coating systems (paints) provide a means for protecting the surfaces of facilities and equipment from corrosion and contamination from radionuclides and also provide wear protection during plant operation and maintenance activities. The review covered protective coating systems used inside the containment for their suitability for and stability under design-basis loss-of-coolant accident (DBLOCA) conditions considering radiation and chemical effects. The regulatory acceptance criteria for protective coating systems are based on: (1) 10 CFR 50, Appendix B, which states quality assurance requirements for the design, fabrication, and construction of safety-related SSCs; and (2) RG 1.54, Revision 1, (Reference 30) for guidance on application and performance monitoring of coatings in nuclear power plants.

Peach Bottom Current Licensing Basis

PBAPS's commitments for coatings are described in the current Quality Assurance Topical Report (QATR) Revision 86 (Reference 31).

Technical Evaluation

The Service Level I protective coating systems used inside the containment were evaluated for their continued suitability for and stability under DBLOCA and small steam line break (SSLB) conditions, considering radiation and chemical effects at EPU conditions. Changes in the post-accident containment environmental conditions (temperature and pressure) due to EPU are presented in Table 2.6-1 of the PUSAR. The post-accident radiation dose in both the drywell (DW) and suppression chamber remains below $1x10^9$ rads for EPU. All Service Level I protective coating systems remain acceptable for EPU operation.

Coating System	Qualification Temperature (°F)	Qualification Pressure (psig)	Qualification Dose (rads)
Carboline Carbozinc 11 /Phenoline 368[1]	340	70	$\geq 1 \times 10^9$
Carboline Carbozinc 11	340	70	$\geq 1 \times 10^9$
BIO-DUR 560BLUE	240	50	$\geq 1 \times 10^9$

1 The Carboline Carbozinc 11 / Phenoline 368 system predates RG 1.54 and is considered acceptable as described below.

Protective coatings originally applied to surfaces in the PBAPS DW and torus pre-dated RG 1.54. Specifically, the DW of Units 2 and 3 and the wetwell (WW) airspace of Unit 2 are coated with Carboline Carbozinc 11 topcoated with Phenoline 368 (CZ11/368). This system was

determined to be suitable for this application by the original plant designer and was applied to the primary containment pressure boundary during initial plant construction. Exelon has determined that these coatings continue to be acceptable under EPU conditions based on the definition of an acceptable coating in EPRI document 1019157 "Guideline on Nuclear Safety-Related Coatings," Revision 2 (Formerly TR-109937 and 1003102). This definition is also referenced in ASTM D5144-08, "Standard Guide for Use of Protective Coating Standards in Nuclear Power Plants". This definition has been included in the NRC acceptance of ASTM D5144-00 and D5144-08 in RG 1.54, Revisions 1 and 2, respectively. An "acceptable" coating system is defined by these documents as:

> "A safety-related coating or lining system for which a suitability for application review which meets the plant licensing requirement has been completed and there is reasonable assurance that, when properly applied and maintained, the coating or lining will not detach under normal or accident conditions."

RS-001 states that specific review criteria for protective coating systems are provided in Standard Review Plan (SRP) Section 6.1.2. The SRP allows a conservative analysis if test documentation is not available. A conservative analysis has been performed to evaluate the acceptability at EPU conditions of the CZ11/368 system used in the PBAPS containments. Available data was reviewed to identify testing performed on coatings similar to the original PBAPS Service Level I coatings that included temperature, pressure, and radiation exposures that enveloped the EPU conditions. From the review of available data for the same or similar systems in various industries and applications and test data for the coating system constituents by themselves, it was concluded that:

- The temperatures achieved in testing performed for Carbozinc 11 and Phenoline 368 exceed the EPU Post LOCA and SSLB temperatures and are representative of the performance of the combined PBAPS CZ11/368 system
- The pressures achieved in testing performed for Carbozinc 11 and Phenoline 368 exceed the Post LOCA and SSLB pressures and are representative of the performance of the combined PBAPS CZ11/368 system
- The radiation dose achieved in testing for Carbozinc 11 and Phenoline 368 exceeds the Post LOCA and SSLB radiation dose and are representative of the performance of the combined PBAPS CZ11/368 system

Based upon the conservative analysis summarized above, PBAPS has determined that reasonable assurance exists that when properly applied and maintained, the CZ11/368 system will not detach under normal or accident conditions.

All other Service Level I coatings utilized at PBAPS are qualified based upon documented test data. Carboline CZ11 is currently the primary coating for the Unit 2 torus below the waterline and for the entire Unit 3 torus. BIODUR 560BLUE is being used as a torus relining material, and is qualified to EPU pressure, temperature, and radiation conditions.

PBAPS currently follows ASTM D3843-93 to fulfill 10 CFR 50, Appendix B, requirements with clarification, exception, and one additional requirement as stated in the PBAPS QATR (Reference 31). ASTM D3843-93 replaced ANSI N101.4-1972 with no reduction in level of commitment to RG 1.54. Service Level I coatings formulated before the issuance of replacement ASTM standards are subject to ANSI N101.2-1972 and ANSI N5.9-1967 (revised as ANSI N5.12-1974).

The Peach Bottom Maintenance Rule Coatings Monitoring Program is described in the PBAPS response to GL 98-04, "Potential for Degradation of the Emergency Core Cooling System and the Containment Spray System After a Loss-of-Coolant Accident Because of Construction and Protective Coating Deficiencies and Foreign Material in Containment," dated November 11, 1998 (Reference 32). The coatings program consists of procedures and programmatic controls under the quality assurance (QA) program described in the QATR (Reference 31) to assure that the applicable requirements for the procurement, application, inspection, and maintenance are met. The program complies with ASTM D3843-93 which pertains to Service Level I coatings. Service Level I coatings are located in primary containment, which includes the DW and torus.

Primary containment coatings are included in the Maintenance Rule scope for PBAPS. Visual examinations of accessible Service Level I coatings inside containment are conducted as part of the surveillance test program and the Primary Containment Leakage Rate Testing Program. DW and torus (above the waterline) inspections are conducted at least every four years, while torus inspections below the water line are conducted at least every six years. Coatings inside the containment, including those inside the torus or submerged below waterline, are also subject to the ISI and repairs that are performed in accordance with station procedures.

The coatings program applies to Service Level I protective coatings inside the primary containment, including the DW and torus. Coating conditions monitored by this program include checking, cracking, blistering, flaking, scaling, peeling, rust through, tiger striping, discoloration, embrittlement or mechanical damage. When localized degradation of a coating is identified, the affected area is evaluated by Engineering and is scheduled for repair, replacement, or removal, as needed. The condition assessments and resulting repair, replacement, or removal activities ensure that the amount of coatings subject to detachment from the substrate during a LOCA is minimized to ensure post-accident operability of the ECCS suction strainers.

Conclusion

The effects of the proposed EPU on protective coating systems have been reviewed. Exelon concludes the effect of changes in conditions post-DBLOCA including SSLB and their effects on the protective coatings have been appropriately addressed. Exelon further concludes the protective coatings will continue to be acceptable following implementation of the proposed EPU and will continue to meet the requirements of 10 CFR 50 Appendix B. Therefore, Exelon finds the proposed EPU acceptable with respect to protective coatings systems.

2.1.6 Flow-Accelerated Corrosion

Regulatory Evaluation

Flow-accelerated corrosion is a corrosion mechanism occurring in carbon steel components exposed to flowing single- or two-phase water. Components made from stainless steel are immune to FAC, while FAC is significantly reduced in components containing small amounts of chromium or molybdenum. The rates of material loss due to FAC depend on velocity of flow, fluid temperature, steam quality, oxygen content, and pH. During plant operation, control of these parameters is limited and the optimum conditions for minimizing FAC effects, in most cases, cannot be achieved. Loss of material by FAC will, therefore, occur. Exelon has reviewed the effects of the proposed EPU on FAC and the adequacy of PBAPS' FAC program to predict the rate of loss so that repair or replacement of damaged components can be made before they reach critical thickness. The PBAPS FAC program is based on NUREG-1344, GL 89-08 (Reference 33), and the guidelines in EPRI report NSAC-202L-R3 (Reference 34). It consists of predicting loss of material using the CHECWORKS™ computer code and performing visual inspections and volumetric examinations of the affected components. The regulatory acceptance criteria are based on the structural evaluation of the minimum acceptable wall thickness for the components undergoing degradation by FAC.

Peach Bottom Current Licensing Basis

The PBAPS program for addressing Flow-Accelerated Corrosion is described in PBAPS UFSAR Appendix Q, Section Q.1, "Existing Aging Management Activities."

The FAC program was also evaluated for license renewal. Systems and system component materials of construction, operating history, and programs used to manage aging effects were evaluated for plant license renewal and documented in the "Safety Evaluation Report Related to the License Renewal of Peach Bottom Atomic Power Station, Units 2 and 3," NUREG-1769, dated March 2003 (Reference 10). The license renewal evaluation associated with the FAC program is documented in NUREG-1769, Section 3.0.3.1.

Technical Evaluation

NEDC-33004P-A, Revision 4, "Constant Pressure Power Uprate," Class III, July 2003 (also referred to as CLTR) was approved by the NRC as an acceptable method for evaluating the effects of CPPUs. Section 10.7 of the CLTR addresses the effect of CPPU on FAC.

PBAPS meets all CLTR dispositions. The results of this evaluation are described below.

Topic	CLTR Disposition	PBAPS Result
Flow Accelerated Corrosion	[[ ]]	Meets CLTR Disposition

The CLTR states that the increase in steam and FW flow rate as a result of EPU influence FAC. In order to monitor and control FAC, PBAPS maintains an effective FAC program. The EPU implementation at PBAPS will change a number of system water and steam flow rates, temperatures, and enthalpies, in turn changing dissolved oxygen concentration. All these factors affect FAC susceptibility status and FAC wear rates. As a result of EPU operating conditions, some lines will experience accelerated rates of FAC, while others will have reduced rates. No lines that were previously non-susceptible to FAC will become susceptible due to EPU operating conditions.

[[

]] The FAC programs will not significantly change for EPU.

The FAC program at PBAPS is based on:

- NRC I&E Bulletin 87-01, "Thinning Pipe Walls in Nuclear Power Plants"
- GL 89-08, "Erosion/Corrosion-Induced Pipe Wall Thinning" (Reference 33)
- EPRI NSAC-202L-R3, "Recommendations for an Effective Flow Accelerated Corrosion Program," Revision 3, May 2006.

With regard to EPRI NSAC-202L-R3, the choice of the method for detecting and evaluating the effect of FAC on a component is dependent on the type of component and its history. Results of the evaluation reveal if the component will remain above minimum allowable wall thickness throughout the next operating cycle and what the predicted minimum wall thickness will be at the end of the operating cycle. Additionally, the evaluation shows the remaining service life of the component (based on the calculated minimum allowable wall thickness) and the next scheduled inspection (NSI) outage. The NSI is an outage prior to the time that the component reaches minimum allowable wall thickness. Piping is analyzed using minimum wall thickness according to the PBAPS design methodology and acceptable only if it meets all the design requirements of PBAPS.

The PBAPS FAC program monitors FAC susceptible piping - both small bore and large bore - to ensure the structural integrity and functionality are maintained. FAC susceptible piping can be divided into two categories: lines that meet the requirements to be modeled using EPRI CHECWORKS™ Steam/Feedwater Application (SFA), and those that do not. For those that meet the requirements, PBAPS uses CHECWORKS™ SFA, in conjunction with volumetric examination to predict FAC wear rates and remaining service life for components in single phase and two phase systems.

The FAC susceptible lines that do not meet the minimum requirements for modeling and analysis by CHECWORKS™ SFA are referred to as "Susceptible - Non-Modeled." This group is comprised of lines with unknown or widely varying operating conditions that prevent the development of accurate predictive models. It includes bypass lines, recirculation lines, vent

lines, high level dumps, and socket welded piping. Some small bore piping and piping susceptible to wall thinning mechanisms other than FAC are also included in this group. Selection of this piping for inspection is typically the result of industry experience, PBAPS experience, or engineering judgment.

One of the most import aspects of the PBAPS FAC program is the proper selection of locations for FAC inspection and subsequent replacement of degraded piping. This is accomplished using the following (detailed in Table 2.1-8):

- CHECWORKS™ SFA predictive wear analysis
- Susceptibility ranking of "Susceptible - Non-Modeled" piping
- OE
- PBAPS-specific experience
- Trending of historical inspection data
- Sound engineering judgment combining all of the above

The proposed EPU may affect the following aspects of the PBAPS FAC program.

- FAC System Susceptibility Evaluation - No new lines will be added in the FAC program based on changes in operating conditions.
- Wear rates - changes in operating conditions will result in some components wearing at an accelerated rate, while others will wear at a slower rate.
- Selection of component inspection and replacement locations and subsequent evaluation of inspection results (trending) - there could be a short-term increase in the number of inspections performed.

These are evaluated as follows:

FAC System Susceptibility Evaluation

PBAPS performed a system susceptibility screening based on the revised EPU heat balance, and determined that no additional lines were required to be added to the FAC program.

Wear Rates – CHECWORKS™ SFA Model Update for EPU

The proposed EPU will result in changes to several variables that may directly influence FAC wear rates. The variables include operating temperature, steam quality, velocity and oxygen content. To account for these changes, PBAPS updated the affected parameters in the CHECWORKS™ SFA model based on the EPU heat balance diagram.

Tables 2.1-4a and 2.1.4b contain a listing of the CHECWORKS™ SFA run definitions (i.e., compilations of lines with similar operating conditions, water chemistry and usage for analysis). A comparison of CLTP and EPU wear rate predictions identified changes ranging from a decrease of 11.7% to an increase of 56.3%. Of the 31 run definitions

listed, 21 had an increase in the predicted wear rate while the remaining 10 exhibited a decrease or no change. Based on a review of the changes in operating conditions, PBAPS found the resulting predicted wear rates to be consistent with EPU conditions.

Selection of Inspection and Replacement Locations

The current approach to select locations for FAC inspection does not change as a result of the EPU. However, there could be an increase in the number of FAC inspections performed on both CHECWORKS™ SFA-modeled and Susceptible - Non-Modeled piping over the next several refueling outages to ensure the effect of power uprate is understood. Inspections will be selected considering the changes in predicted wear rates, actual component thicknesses, operating time since last examination and design margin. This approach will ensure that FAC susceptible components are inspected or replaced prior to reaching code minimum wall thickness. Based on the EPU evaluation, no significant effect on the component replacement schedule is anticipated in the near term. The continued implementation of the existing PBAPS FAC program, updated appropriately to include EPU system parameters, will ensure that any required changes to the component inspection and replacement schedules are made prior to EPU implementation.

Benchmarking CHECWORKS™ SFA Predicted Component Thickness

Tables 2.1-5a and 2.1-4b present a comparison of CHECWORKS™-predicted thicknesses to measured thicknesses for a sample component from each of the 31 run definitions. The selection process includes components with the highest predicted wear rates prior to EPU. The measured thicknesses were determined by ultrasonic testing NDE performed between 2R10 and 2R16 refueling outages for Unit 2 and 3R10 and 3R17 refueling outages for Unit 3.

The table shows that, in all cases, the measured thickness from inspection was greater than the predicted thickness, indicating that CHECWORKS™ SFA predictions are typically conservative.

Other than FAC, PBAPS also inspects certain components for degradation caused by liquid droplet impingement (LDI). Indications that LDI may be present are valve leak-bys, or conditions (open valves, leaks) that cause the velocity of the two-phased mixture to increase dramatically. The FAC program also inspects for cavitation per system engineering requests.

The PBAPS FAC program adequately manages the effects on FAC due to EPU. Therefore, PBAPS meets all CLTR dispositions for FAC.

Conclusion

Exelon has reviewed the effect of the proposed EPU on the FAC analysis for the plant and concludes the changes in the plant operating conditions on the FAC analysis have been adequately addressed. Exelon further concludes that the updated analyses predicts the loss of material by FAC and will ensure timely repair or replacement of degraded components following implementation of the proposed EPU. Therefore, Exelon finds the proposed EPU acceptable with respect to FAC.

2.1.7 Reactor Water Cleanup System

Regulatory Evaluation

The reactor water cleanup (RWCU) system provides a means for maintaining reactor water quality by filtration and ion exchange and a path for removing reactor coolant when necessary. Portions of the RWCU system comprise the RCPB. The review of the RWCU system included component design parameters for flow, temperature, pressure, heat removal capability, and impurity removal capability; and the instrumentation and process controls for proper system operation and isolation. The review consisted of evaluating the adequacy of the plant's TSs in these areas under the proposed EPU conditions. The regulatory acceptance criteria for the RWCU system are based on: (1) GDC-14, insofar as it requires the RCPB be designed, fabricated, erected, and tested so as to have an extremely low probability of rapidly propagating fracture; (2) GDC-60, insofar as it requires the plant design include means to control the release of radioactive effluents; and (3) GDC-61, insofar as it requires systems that contain radioactivity be designed with appropriate confinement.

Peach Bottom Current Licensing Basis

The general design criteria listed in RS-001 are those currently specified in 10 CFR 50, Appendix A. The applicable PBAPS principal design criteria predate these criteria. The PBAPS principal design criteria are listed in UFSAR Section 1.5, "Principal Design Criteria." In 1967, the Atomic Energy Commission (AEC) published for public comment a revised set of proposed General Design Criteria (Federal Register 32 FR 10213 (Reference 9), July 11, 1967). Although not explicitly licensed to the AEC proposed General Design Criteria published in 1967, Philadelphia Electric Company (PECO), the predecessor to Exelon, performed a comparative evaluation of the design basis of PBAPS Units 2 and 3 against the AEC proposed General Design Criteria of 1967. The PBAPS UFSAR, Appendix H, "Conformance to AEC (NRC) Criteria," contains this comparative evaluation. UFSAR Appendix H provides a comparative evaluation with each of the groups of criteria set out in the July 1967 AEC release. As to each group of criteria, there is a statement of Exelon's understanding of the intent of the criteria in that group and a discussion of the plant design conformance with the intent of the group of criteria. Following a restatement of each of the proposed criteria is a list of references to locations in the PBAPS UFSAR where there is subject matter relating to the intent of that particular criteria.

For the current GDC-14 and 61 in the Regulatory Evaluation above, the PBAPS comparative evaluation of the comparable 1967 AEC proposed General Design Criteria (referred to here as "Draft GDC") is contained in PBAPS UFSAR Appendix H: Draft GDC-9, Draft GDC-33, Draft GDC-34, Draft GDC-35, Draft GDC-36, Draft GDC-67, Draft GDC-68, Draft GDC-69, and Draft GDC-70. Current GDC-60 is applicable to PBAPS as described in the NRC SER for PBAPS Unit 2 and Unit 3 ODCM License Amendments 102 and 104 (Reference 35), respectively.

The RWCU system is described in PBAPS UFSAR Section 4.9, "Reactor Water Cleanup System."

In addition to the evaluations described in the PBAPS UFSAR, PBAPS's systems and components were evaluated for license renewal. Systems and system component materials of construction, operating history, and programs used to manage aging effects were evaluated for plant license renewal and documented in the "Safety Evaluation Report Related to the License Renewal of Peach Bottom Atomic Power Station, Units 2 and 3," NUREG-1769, dated March 2003 (Reference 10). The license renewal evaluation associated with the RWCU system is documented in NUREG-1769, Section 3.1.4 and Section 2.3.3.19 as supplemented by the responses to RAI 2.2-1.1(a) (Reference 36) and RAIs 2.1.2-3, 2.1.2-4, and 3.3-1 (Reference 37).

Technical Evaluation

NEDC-33004P-A, Revision 4, "Constant Pressure Power Uprate," Class III, July 2003 (also referred to as CLTR) was approved by the NRC as an acceptable method for evaluating the effects of CPPUs. Section 3.11 of the CLTR addresses the effect of CPPU on the RWCU system. The results of this evaluation are described below.

The RWCU system is a normally operating system with no safety-related functions other than RCPB and containment isolation. This system is designed to remove solid and dissolved impurities from recirculated reactor coolant, thereby reducing the concentration of radioactive and corrosive species in the reactor coolant. The evaluation of the system performance of the PBAPS RWCU System under EPU conditions is presented below. The effects of EPU on the RWCU containment isolation function and valves are included in the containment isolation assessment in Sections 2.2.4 and 2.6.1.3.

Tables 2.1-6 and 2.1-7 contain the magnitude of changes in RWCU system operating conditions and a summary of the chemistry values. PBAPS meets all CLTR dispositions. The topics addressed in this evaluation are:

Topic	CLTR Disposition	PBAPS Result
System Performance	[[	Meets CLTR Disposition
Containment Isolation	]]	Addressed in Section 2.6.1.3

As explicitly stated in Section 3.11 of the CLTR, the RWCU system may be slightly affected by the increase in FW flow due to the power uprate.

RWCU system operation at the EPU RTP level slightly decreases the temperature within the RWCU system (from 530°F to 527.5°F). This system currently operates at flow rates above the original design flow. The operating flow rates are not being changed for EPU. Table 2.1-6 provides the magnitude of changes in RWCU system operating conditions (e.g., a decrease in

operating inlet temperature); these conditions are based on a reactor heat balance for 1.02 x EPU with steam quality of 99.7%.

RWCU system flow is usually selected to be approximately 1% of FW system flow based on operational history. For the PBAPS EPU, the RWCU system was analyzed for flow at 147,000 lbm/hr. This flow rate is approximately 0.89% of FW flow. The evaluation of RWCU performance for the PBAPS EPU considered water chemistry, heat exchanger performance, pump performance, flow control valve capability and filter / demineralizer performance. All aspects of performance were found to be within the design of the RWCU system at the analyzed flow for EPU conditions. The RWCU system analysis concludes that:

1. An increase in filter / demineralizer backwash frequency occurs, but this is within the capacity of the radwaste system.
2. The changes in operating system conditions result from a decrease in inlet temperature and an increase in FW System operating pressure.
3. The RWCU system filter / demineralizer control valves will operate in a more open position to compensate for the increased RWCU system pressure associated with the increase in FW system pressure.
4. No changes to instrumentation are required, and setpoint changes are not required due to the system process parameter changes.

Previous OE has shown that the increased FW flow results in increases in three key reactor coolant chemistry parameters. Table 2.1-7 provides a summary of the chemistry values and the evaluation results for each are presented below:

- Sulfates concentration – The current maximum level of sulfates is 0.82 ppb for both units. The expected reactor water sulfate level for EPU, considering the FW flow increase, is 0.95 ppb. This level is well below the administrative limit of 2.0 ppb for sulfates.
- Chlorides concentration – The current maximum level of chlorides is 0.38 ppb for both units. The expected reactor water chloride level for EPU, considering the FW flow increase, is 0.44 ppb. This level is well below the administrative limit of 1.0 ppb for chlorides.
- Reactor water conductivity – The calculated reactor water conductivity increases from 0.131 μS/cm to 0.143 μS/cm because of the increase in FW flow. This expected level is below the administrative limit for conductivity of 0.15 μS/cm.

The effects of EPU on the RWCU system functional capability have been reviewed, and the system can perform adequately at EPU RTP with the CLTP RWCU system flow. As can be seen from Table 2.1-6, the changes in RWCU system operating conditions from CLTP to EPU are small. The PBAPS RWCU system has sufficient capacity to respond to the EPU conditions and maintain the chemistry parameters within administrative limits. Therefore, PBAPS meets all CLTR dispositions for system performance.

Conclusion

Exelon has reviewed the effects of the proposed EPU on the RWCU system and concludes the changes in impurity levels and pressure and their effects on the RWCU system have been adequately addressed. Exelon further concludes that the RWCU system will continue to be acceptable following implementation of the proposed EPU and will continue to meet the requirements of the current licensing basis. Therefore, Exelon finds the proposed EPU acceptable with respect to the RWCU system.

Table 2.1-1a Upper Shelf Energy 60-Year License (54 EFPY) – Unit 2

Equivalent Margin Analysis
Plant Applicability Verification Form
for Peach Bottom Unit 2
including Extended Power Uprate Conditions
60-Year License (54 EFPY)

BWR/3-6 PLATE

ISP Surveillance Plate USE (Heat C2761-2):

%Cu	=	0.10	
Unirradiated USE	=	127.2 ft-lb	
1st Capsule Measured USE	=	133.0 ft-lb	
1st Capsule Fluence	=	1.8E+17 n/cm^2	
1st Capsule Measured % Decrease	=	-4.6	(Charpy Curves)
1st Capsule RG 1.99 Predicted % Decrease	=	8.0	(RG 1.99, Rev. 2, Figure 2)

Limiting Beltline Plate USE (Heat C2873-1):

%Cu	=	0.12	
54 EFPY 1/4T Fluence	=	1.11E+18 n/cm^2	
RG 1.99 Predicted % Decrease	=	12.5	(RG 1.99, Rev. 2, Figure 2)
Adjusted % Decrease	=	N/A	(RG 1.99, Rev. 2, Position 2.2)

12.5% ≤ 23.5%

Therefore, vessel plates are bounded by Equivalent Margin Analysis

2.1-1a Upper Shelf Energy 60-Year License (54 EFPY) – Unit 2 (continued)

Equivalent Margin Analysis
Plant Applicability Verification Form
for Peach Bottom Unit 2
including Extended Power Uprate Conditions
60-Year License (54 EFPY)

BWR/2-6 WELD

ISP Surveillance Weld USE (Heat PB2 ESW):

%Cu	=	0.10
Unirradiated USE	=	110.9 ft-lb
1st Capsule Measured USE	=	113.6 ft-lb
1st Capsule Fluence	=	1.8E+17 n/cm^2

1st Capsule Measured % Decrease	=	-2.4	(Charpy Curves)
1st Capsule RG 1.99 Predicted % Decrease	=	9.5	(RG 1.99, Rev. 2, Figure 2)

Limiting Beltline Weld USE (Heat 37C065):

%Cu	=	0.182
54 EFPY 1/4T Fluence	=	1.11E+18 n/cm^2

RG 1.99 Predicted % Decrease	=	19.5	(RG 1.99, Rev. 2, Figure 2)
Adjusted % Decrease	=	N/A	(RG 1.99, Rev. 2, Position 2.2)

19.5% ≤ 39.0%

Therefore, vessel welds are bounded by Equivalent Margin Analysis

Table 2.1-1b Upper Shelf Energy 60-Year License (54 EFPY) – Unit 3

Equivalent Margin Analysis
Plant Applicability Verification Form
for Peach Bottom Unit 3
including Extended Power Uprate Conditions
60-Year License (54 EFPY)

BWR/3-6 PLATE

ISP Surveillance Plate USE (Heat B0673-1):

%Cu	=	0.15	
Unirradiated USE	=	158.1 ft-lb	
1st Capsule Measured USE	=	158.8 ft-lb	
1st Capsule Fluence	=	4.9E+17 n/cm^2	
2nd Capsule Measured USE	=	137.0 ft-lb	
2nd Capsule Fluence	=	1.1E+18 n/cm^2	
3rd Capsule Measured USE	=	133.0 ft-lb	
3rd Capsule Fluence	=	1.9E+18 n/cm^2	
1st Capsule Measured % Decrease	=	-0.4	(Charpy Curves)
1st Capsule RG 1.99 Predicted % Decrease	=	12.0	(RG 1.99, Rev. 2, Figure 2)
2nd Capsule Measured % Decrease	=	13.4	(Charpy Curves)
2nd Capsule RG 1.99 Predicted % Decrease	=	14.5	(RG 1.99, Rev. 2, Figure 2)
3rd Capsule Measured % Decrease	=	15.9	(Charpy Curves)
3rd Capsule RG 1.99 Predicted % Decrease	=	16.5	(RG 1.99, Rev. 2, Figure 2)

Limiting Beltline Plate USE (Heat C2773-2):

%Cu	=	0.15	
54 EFPY 1/4T Fluence	=	1.06E+18 n/cm^2	
RG 1.99 Predicted % Decrease	=	14.5	(RG 1.99, Rev. 2, Figure 2)
Adjusted % Decrease	=	N/A	(RG 1.99, Rev. 2, Position 2.2)

14.5% ≤ 23.5%

Therefore, vessel plates are bounded by Equivalent Margin Analysis

2.1-1b Upper Shelf Energy 60-Year License (54 EFPY) – Unit 3 (continued)

Equivalent Margin Analysis
Plant Applicability Verification Form
for Peach Bottom Unit 3
including Extended Power Uprate Conditions
60-Year License (54 EFPY)

BWR/2-6 WELD

ISP Surveillance Weld USE (Heat 5P6756):

%Cu	=	0.06
Unirradiated USE	=	104.4 ft-lb
1st Capsule Measured USE	=	84.4 ft-lb
1st Capsule Fluence	=	1.2E+18 n/cm^2
2nd Capsule Measured USE	=	79.3 ft-lb
2nd Capsule Fluence	=	1.9E+18 n/cm^2
3rd Capsule Measured USE	=	84.6 ft-lb
3rd Capsule Fluence	=	1.6E+18 n/cm^2
4th Capsule Measured USE	=	110.7 ft-lb
4th Capsule Fluence	=	2.9E+17 n/cm^2

1st Capsule Measured % Decrease	=	19.2	(Charpy Curves)
1st Capsule RG 1.99 Predicted % Decrease	=	12.1	(RG 1.99, Rev. 2, Figure 2)
2nd Capsule Measured % Decrease	=	24.0	(Charpy Curves)
2nd Capsule RG 1.99 Predicted % Decrease	=	13.7	(RG 1.99, Rev. 2, Figure 2)
3rd Capsule Measured % Decrease	=	19.0	(Charpy Curves)
3rd Capsule RG 1.99 Predicted % Decrease	=	13.0	(RG 1.99, Rev. 2, Figure 2)
4th Capsule Measured % Decrease	=	-6.0	(Charpy Curves)
4th Capsule RG 1.99 Predicted % Decrease	=	8.8	(RG 1.99, Rev. 2, Figure 2)

Limiting Beltline Weld USE (Heat 37C065):

%Cu	=	0.182	
54 EFPY 1/4T Fluence	=	1.11E+18 n/cm^2	
RG 1.99 Predicted % Decrease	=	19.5	(RG 1.99, Rev. 2, Figure 2)
Adjusted % Decrease	=	N/A	(RG 1.99, Rev. 2, Position 2.2)

19.5% ≤ 39.0%

Therefore, vessel welds are bounded by Equivalent Margin Analysis

Table 2.1-2a Adjusted Reference Temperatures 60-Year License (54 EFPY) – Unit 2

Lower-Intermediate Shell Plates and Axial Welds

Thickness in inches= 6.125 — 54 EFPY Peak I.D. fluence = 1.61E+18 n/cm^2
54 EFPY Peak 1/4 T fluence = 1.11E+18 n/cm^2

Lower Shell Plates, Circumferential Weld and Axial Welds

Thickness in inches= 6.125 — 54 EFPY Peak I.D. fluence = 1.23E+18 n/cm^2
54 EFPY Peak 1/4 T fluence = 8.52E+17 n/cm^2

Water Level Instrumentation Nozzle (Lower-Intermediate Shell)

Thickness in inches= 6.125 — 54 EFPY Peak I.D. fluence = 5.69E+17 n/cm^2
54 EFPY Peak 1/4 T fluence = 3.94E+17 n/cm^2

COMPONENT	HEAT	%Cu	%Ni	CF	Initial RTndt °F	1/4 T Fluence n/cm^2	54 EFPY ΔRT_{NDT} °F	σ_I	σ_Δ	Margin °F	54 EFPY Shift °F	54 EFPY ART °F
PLANT-SPECIFIC CHEMISTRIES PLATES:												
Lower Shell Mark 57	C2791-2	0.12	0.52	81.0	-8	8.52E+17	31.2	0	15.6	31.2	62.5	54.5
	C2761-1	0.11	0.54	73.0	-14	8.52E+17	28.1	0	14.1	28.1	56.3	42.3
	C2873-2	0.12	0.57	82.0	-20	8.52E+17	31.6	0	15.8	31.6	63.2	43.2
Lower-Intermediate Shell Mark 58	C2894-2	0.13	0.42	86.0	-20	1.11E+18	37.8	0	17.0	34.0	71.8	51.8
	C2873-1	0.12	0.57	82.0	-6	1.11E+18	36.0	0	17.0	34.0	70.0	64.0
	C2761-2	0.11	0.54	73.0	-20	1.11E+18	32.0	0	16.0	32.0	64.1	44.1
AXIAL WELDS:												
Lower Shell B1,B2,B3	37C065	0.182	0.181	94.5	-45	8.52E+17	36.4	16	18.2	48.5	84.9	39.9
Lower-Int Shell C1,C2,C3	37C065	0.182	0.181	94.5	-45	1.11E+18	41.5	16	20.7	52.4	93.9	48.9
CIRCUMFERENTIAL WELDS:												
BC	S-3986 Linde 124 Lot 3876	0.056	0.96	76.4	-32	8.52E+17	29.5	0	14.7	29.5	58.9	26.9
NOZZLES:												
N16 [1]	C2873-1	0.12	0.57	82.0	-6	3.94E+17	21.1	0	10.5	21.1	42.1	36.1
BEST ESTIMATE CHEMISTRIES from BWRVIP-135 R1												
BC	S-3986	0.058	0.949	79.2	-32	8.52E+17	30.5	0	15.3	30.5	61.1	29.1
INTEGRATED SURVEILLANCE PROGRAM (BWRVIP-135 R1):												
Plate [2]	C2761-2	0.10	0.54	65.0	-20	1.11E+18	28.5	0	14.3	28.5	57.1	37.1
Weld [3]	PB2 ESW	0.10	0.32	84.2	-45	1.11E+18	37.0	0	18.5	37.0	73.9	28.9

Notes:
[1] The N16 Water Level Instrumentation Nozzle occurs in the beltline region. Because the forging is fabricated from Alloy 600 material, the ART is calculated using the plate heats where the nozzles occur.
[2] The ISP plate material is not the vessel target material, but does occur within the Unit 2 beltline region (Lower-Intermediate Shell). Therefore, this material is considered in determining the limiting ART. Only one set of surveillance data is currently available; therefore, upon testing of a second ISP capsule scheduled for 2018, the CF can be reviewed.
[3] The ISP weld material is not the vessel target material and does not occur within the Unit 2 beltline region. Therefore, this material is not considered in determining the limiting ART. The CF is determined using RG1.99 for the ISP chemistry.

Table 2.1-2bAdjusted Reference Temperatures 60-Year License (54 EFPY) – Unit 3

Intermediate Shell Plates and Axial Welds

Thickness in inches= 6.125

54 EFPY Peak I.D. fluence = 9.54E+17 n/cm^2
54 EFPY Peak 1/4 T fluence = 6.61E+17 n/cm^2

Lower-Intermediate Shell Plates and Axial Welds

Thickness in inches= 6.125

54 EFPY Peak I.D. fluence = 1.53E+18 n/cm^2
54 EFPY Peak 1/4 T fluence = 1.06E+18 n/cm^2

Lower Shell Plates, Circumferential Weld and Axial Welds

Thickness in inches= 6.125

54 EFPY Peak I.D. fluence = 9.48E+17 n/cm^2
54 EFPY Peak 1/4 T fluence = 6.56E+17 n/cm^2

Water Level Instrumentation Nozzle (Lower-Intermediate Shell)

Thickness in inches= 6.125

54 EFPY Peak I.D. fluence = 5.69E+17 n/cm^2
54 EFPY Peak 1/4 T fluence = 3.94E+17 n/cm^2

COMPONENT	HEAT	%Cu	%Ni	CF	Initial RT_{NDT} °F	1/4 T Fluence n/cm^2	54 EFPY Δ RT_{NDT} °F	σ_I	σ_Δ	Margin °F	54 EFPY Shift °F	54 EFPY ART °F
PLANT-SPECIFIC CHEMISTRIES												
PLATES:												
Lower Shell												
6-146-1	C4689-2	0.12	0.56	82.2	-10	6.56E+17	27.8	0	13.9	27.8	55.6	45.6
6-146-3	C4684-2	0.13	0.58	90.4	-20	6.56E+17	30.6	0	15.3	30.6	61.1	41.1
6-146-7	C4627-1	0.12	0.57	82.4	-20	6.56E+17	27.9	0	13.9	27.9	55.7	35.7
Lower-Intermediate Shell												
6-139-10	C2773-2	0.15	0.49	104.0	10	1.06E+18	44.6	0	17.0	34.0	78.6	88.6
6-139-11	C2775-1	0.13	0.46	86.8	10	1.06E+18	37.2	0	17.0	34.0	71.2	81.2
6-139-12	C3103-1	0.14	0.6	100.0	10	1.06E+18	42.9	0	17.0	34.0	76.9	86.9
Intermediate Shell												
6-146-5	C4608-1	0.12	0.55	82.0	10	6.61E+17	27.8	0	13.9	27.8	55.6	65.6
6-146-4	C4689-1	0.12	0.56	82.2	10	6.61E+17	27.9	0	13.9	27.9	55.7	65.7
6-146-2	C4654-1	0.11	0.55	73.5	10	6.61E+17	24.9	0	12.5	24.9	49.8	59.8
AXIAL WELDS:												
Lower Shell D1,D2,D3	37C065	0.182	0.181	94.5	-45	6.56E+17	31.9	16	16.0	45.2	77.2	32.2
Lower-Int Shell E1,E2,E3	37C065	0.182	0.181	94.5	-45	1.06E+18	40.5	16	20.2	51.6	92.1	47.1
Intermediate Shell F1,F2,F3	37C065	0.182	0.181	94.5	-45	6.61E+17	32.0	16	16.0	45.3	77.3	32.3
CIRCUMFERENTIAL WELDS:												
Lower to Lower-Int DE	3P4000 Linde 124 Lot 3932	0.020	0.934	27.0	-50	6.56E+17	9.1	0	4.6	9.1	18.3	-31.7
Lower-Int to Intermediate EF	1P4217 Linde 124 Lot 3929	0.102	0.942	136.9	-50	6.61E+17	46.4	0	23.2	46.4	92.8	42.8
NOZZLES:												
N16 [1]	C4689-1	0.12	0.56	82.2	10	3.94E+17	21.1	0	10.6	21.1	42.2	52.2
BEST ESTIMATE CHEMISTRIES from BWRVIP-135 R1												
DE	3P4000	0.020	0.935	27.0	-50	6.56E+17	9.1	0	4.6	9.1	18.3	-31.7
EF	1P4217	0.104	0.938	139.3	-50	6.61E+17	47.2	0	23.6	47.2	94.5	44.5
INTEGRATED SURVEILLANCE PROGRAM (BWRVIP-135 R1):												
Plate [2]	B0673-1	0.15	0.65	111.25	10	1.06E+18	47.7	0	17.0	34.0	81.7	91.7
Weld [3]	5P6756	0.06	0.93	82.0	-45	1.06E+18	35.1	0	17.6	35.1	70.3	25.3
Weld [3]	5P6756 [4]	0.08	0.94	108.0	-45	1.06E+18	46.3	0	23.1	46.3	92.6	47.6

Notes:

[1] The N16 Water Level Instrumentation Nozzle occurs in the beltline region. Because the forging is fabricated from Alloy 600 material, the ART is calculated using the plate heats where the nozzles occur.

[2] The ISP plate material is not the vessel target material and does not occur within the Unit 3 beltline region. Therefore, this material is not considered in determining the limiting ART. The CF is determined using RG1.99 for the ISP chemistry.

[3] The ISP weld material is not the vessel target material and does not occur within the Unit 3 beltline region. Therefore, this material is not considered in determining the limiting ART. The CF is determined using RG1.99 for the ISP chemistry.

[4] The ISP best estimate chemistry is used.

Table 2.1-3a 54 EFPY Effects of Irradiation on RPV Circumferential Weld Properties–Unit 2

Parameter	NRC Staff Assessment for 64 EFPY[4] (Circ Welds)	PBAPS Unit 2 54 EFPY[5]
	(CB&I RPV)	(CB&I Vessel)
Cu%	0.10	0.058
Ni%	0.99	0.949
CF	134.9	79.2
Fluence at clad/weld interface (10^{19} n/cm^2)	1.02	0.123
$RT_{NDT(U)}$ (°F)	-65	-32
ΔRT_{NDT} w/o margin (°F) (See Note 3)	135.6	36.4
Mean RT_{NDT} (°F)	70.6	4.4
P (F/E) NRC (See Note 1)	1.78E-05	(Note 2)

Notes:

1. P (F/E) stands for "Probability of a failure event."
2. Although a conditional failure probability has not been calculated, the fact that the PBAPS Unit 2 values at the end of license are less than the 64 EFPY value provided by the NRC leads to the conclusion that the PBAPS Unit 2 RPV conditional failure probability is bounded by the NRC analysis, consistent with the requirements defined in GL 98-05 (Reference 13).
3. $\Delta RT_{NDT} = CF * f^{(0.28 - 0.10 \log f)}$
4. From Table 2.6-5 of Reference 14, with corrected CF from Reference 15.
5. Best estimate chemistries are used for conservatism.

Table 2.1-3b 54 EFPY Effects of Irradiation on RPV Circumferential Weld Properties–Unit 3

Parameter	NRC Staff Assessment for 64 EFPY[4] (Circ Welds)	PBAPS Unit 3 54 EFPY[5]
	(CB&I RPV)	(CB&I Vessel)
Cu%	0.10	0.104
Ni%	0.99	0.938
CF	134.9	139.3
Fluence at clad/weld interface (10^{19} n/cm^2)	1.02	0.0954
$RT_{NDT(U)}$ (°F)	-65	-50
ΔRT_{NDT} w/o margin (°F) (See Note 3)	135.6	56.8
Mean RT_{NDT} (°F)	70.6	6.8
P (F/E) NRC (See Note 1)	1.78E-05	(Note 2)

Notes:

1. P (F/E) stands for "Probability of a failure event."
2. Although a conditional failure probability has not been calculated, the fact that the PBAPS Unit 3 values at the end of license are less than the 64 EFPY value provided by the NRC leads to the conclusion that the PBAPS Unit 3 RPV conditional failure probability is bounded by the NRC analysis, consistent with the requirements defined in GL 98-05 (Reference 13).
3. $\Delta RT_{NDT} = CF * f^{(0.28 - 0.10 \log f)}$
4. From Table 2.6-5 of Reference 14, with corrected CF from Reference 15.
5. Best estimate chemistries are used for conservatism.

Table 2.1-4a Comparison of Key Parameters Influencing FAC Wear Rate, PBAPS Unit 2

CLTP vs. EPU

CHECWORKS™ Wear Rate Analysis Run Definition Name	Temperature (°F)		% Change	Velocity (ft/sec)		% Change	Oxygen (ppb)		% Change	Quality		% Change	Percent Change in Predicted Wear Rate Due to Power Uprate
	Current (107%)	EPU (122%)		Current (107%)	EPU (122%)		Current (107%)	EPU (122%)		Current (107%)	EPU (122%)		
Condensate 1 to 2	184.9	173.5	-6.17%	11.5	13.1	14.07%	61.0	61.0	No Change	0.000	0.000	No Change	-2.2%
Condensate 2 to 3	242.5	224.3	-7.51%	11.8	13.4	13.62%	61.0	61.0	No Change	0.000	0.000	No Change	-8.0%
Feedwater Htr 3 to 4	302.5	298.8	-1.22%	12.1	13.9	14.31%	61.0	61.0	No Change	0.000	0.000	No Change	8.2%
Feedwater Htr 4 to 5	335.6	331.5	-1.22%	12.4	14.1	14.26%	61.0	61.0	No Change	0.000	0.000	No Change	13.5%
FW CVOC to Reactor	384.4	386.6	0.57%	15.5	17.8	14.70%	61.0	61.0	No Change	0.000	0.000	No Change	3.8%
FW Htr 5 to Pump	382.4	384.6	0.58%	12.8	14.7	14.73%	61.0	61.0	No Change	0.000	0.000	No Change	4.0%
FW Min Flow Recirc	385.6	387.9	0.60%	31.0	31.1	0.17%	61.0	61.0	No Change	0.000	0.000	No Change	-3.9%
FW Pmp Disch to CVOC	384.4	386.6	0.57%	14.9	17.1	14.70%	61.0	61.0	No Change	0.000	0.000	No Change	3.8%
FWH Drn 2 to 1	199.1	182.9	-8.14%	4.3	5.0	15.93%	61.3	42.6	-30.52%	0.000	0.000	No Change	10.4%

Table 2.1-4a Comparison of Key Parameters Influencing FAC Wear Rate, PBAPS Unit 2

CLTP vs. EPU (Continued)

CHECWORKS™ Wear Rate Analysis Run Definition Name	Temperature (°F)			Velocity (ft/sec)			Oxygen (ppb)			Quality			Percent Change in Predicted Wear Rate Due to Power Uprate
	Current (107%)	EPU (122%)	% Change	Current (107%)	EPU (122%)	% Change	Current (107%)	EPU (122%)	% Change	Current (107%)	EPU (122%)	% Change	
FWH Drn 3 to 2	257.1	254.2	-1.13%	4.8	5.7	19.11%	190.0	173.8	-8.52%	0.000	0.000	No Change	17.8%
FWH Drn 4 to 3	312.2	315.0	0.90%	6.3	7.1	12.31%	315.8	301.0	-4.69%	0.000	0.000	No Change	11.5%
FWH Drn 5 to 4	344.7	341.4	-0.96%	4.4	4.8	8.30%	653.7	679.0	3.88%	0.000	0.000	No Change	2.4%
MS Bypss Valve Disch	543.7	541.2	-0.46%	19.5	27.8	42.86%	4.7	5.3	11.07%	0.997	0.996	-0.11%	17.6%
MSDT to FWH 4 W/INJ	385.2	390.8	1.45%	5.4	5.6	3.44%	4.6	5.1	9.80%	0.006	0.007	16.67%	0.2%
RCIC Pump Turb Exh	227.2	227.2	No Change	44.1	44.1	No Change	0.0	0.0	No Change	0.900	0.900	No Change	No Change
RWCU Return to FW	429.0	429.0	No Change	11.6	11.6	No Change	61.0	61.0	No Change	0.000	0.000	No Change	No Change
RWCU Suct RPV Drain	493.0	493.0	No Change	16.2	16.2	No Change	61.0	61.0	No Change	0.000	0.000	No Change	No Change

Notes

1. All PBAPS Extraction Steam piping is constructed of FAC resistant material.
2. All piping downstream of the level control valves on the Heater 5 drain line to Heater 4 is constructed of FAC resistant material.

Table 2.1-4b Comparison of Key Parameters Influencing FAC Wear Rate, PBAPS Unit 3

CLTP vs. EPU

CHECWORKS™ Wear Rate Analysis Run Definition Name	Temperature (°F)		% Change	Velocity (ft/sec)		% Change	Oxygen (ppb)		% Change	Quality		% Change	Percent Change in Predicted Wear Rate Due to Power Uprate
	Current (107%)	EPU (122%)		Current (107%)	EPU (122%)		Current (107%)	EPU (122%)		Current (107%)	EPU (122%)		
Condensate 1 to 2	184.9	169.0	-8.60%	11.5	13.0	13.57%	56.0	56.0	No Change	0.00	0.00	No Change	-6.28%
Condensate 2 to 3	242.2	218.3	-9.87%	11.8	13.3	13.00%	56.0	56.0	No Change	0.00	0.00	No Change	-11.77%
Feedwater Htr 3 to 4	302.4	292.8	-3.17%	12.1	13.8	13.61%	56.0	56.0	No Change	0.00	0.00	No Change	5.86%
Feedwater Htr 4 to 5	334.9	324.5	-3.11%	12.4	14.0	13.50%	56.0	56.0	No Change	0.00	0.00	No Change	21.38%
FW CVOC to Reactor	384.2	384.2	No Change	15.5	17.7	14.19%	56.0	56.0	No Change	0.00	0.00	No Change	7.70%
FW Htr 5 to Pump	382.2	382.2	No Change	12.8	14.6	14.22%	56.0	56.0	No Change	0.00	0.00	No Change	7.71%
FW Min Flow Recirc	385.4	385.5	0.03%	31.0	31.0	0.01%	56.0	56.0	No Change	0.00	0.00	0.05%	-0.16%

Table 2.1-4b Comparison of Key Parameters Influencing FAC Wear Rate, PBAPS Unit 3

CLTP vs. EPU (Continued)

CHECWORKS™ Wear Rate Analysis Run Definition Name	Temperature (°F)		% Change	Velocity (ft/sec)		% Change	Oxygen (ppb)		% Change	Quality		% Change	Percent Change in Predicted Wear Rate Due to Power Uprate
	Current (107%)	EPU (122%)		Current (107%)	EPU (122%)		Current (107%)	EPU (122%)		Current (107%)	EPU (122%)		
FW Pmp Disch to CVOC	384.2	384.2	No Change	18.4	21.0	14.19%	56.0	56.0	No Change	0.00	0.00	No Change	7.70%
FWH Drn 2 to 1	199.3	182.9	-8.23%	4.3	5.0	16.42%	60.9	37.3	-38.76%	0.00	0.00	No Change	14.22%
FWH Drn 3 to 2	253.3	235.8	-6.91%	7.7	9.0	17.26%	189.5	155.0	-18.23%	0.00	0.00	No Change	9.29%
FWH Drn 4 to 3	312.0	298.7	-4.26%	6.3	7.0	11.10%	312.8	270.8	-13.42%	0.00	0.00	No Change	56.30%
FWH Drn 5 to 4	344.3	338.0	-1.83%	4.4	6.0	36.26%	651.5	652.6	0.17%	0.00	0.00	No Change	25.12%
HPCI Pump Turb Exh	239.4	239.4	No Change	53.3	53.3	No Change	0.0	0.0	No Change	0.90	0.90	No Change	0.00%
MSDT to FWH 4	385.0	389.8	1.25%	5.4	5.6	2.84%	4.9	5.1	7.43%	0.006	0.007	16.67%	0.92%

Notes

1. All PBAPS Extraction Steam piping is constructed of FAC resistant material.
2. The PBAPS Cold Reheat piping is constructed of FAC resistant material.
3. All piping downstream of the level control valves on the Heater 5 drain line to Heater 4 is constructed of FAC resistant material.

Table 2.1-5a Sample of Components with Highest Predicted Wear Rates, PBAPS Unit 2

CHECWORKS^{STM} SFA-Predicted Thickness vs. Measured Thickness

CHECWORKS^{STM} Wear Rate Analysis Run Definition Name	Component Name	Component Type	Nominal Pipe Size (inches)	Nominal Thickness Tnom (inches)	Measured Thickness Tmeas (inches)	Predicted Thickness Tpred (inches)	Ratio of Measured Thickness to Predicted Thickness	Time of Inspection
Condensate 1 to 2	HISO-1806-E04	90-DEG ELBOW	20	0.594	0.578	0.523	1.10	2R10
Condensate 2 to 3	ISO-2-18-33-E04	90-DEG ELBOW	20	0.594	0.557	0.518	1.08	2R15
Feedwater Htr 3 to 4	HISO-1802-E02	90-DEG ELBOW	20	0.594	0.597	0.516	1.16	2R16
Feedwater Htr 4 to 5	HISO-1801-E11	90-DEG ELBOW	20	0.594	0.508	0.506	1.00	2R16
FW CVOC to Reactor	HISO-605-B11	45-DEG ELBOW	12	0.844	0.763	0.724	1.05	2R16
FW Htr 5 to Pump	HISO-1802-E21	90-DEG ELBOW	20	0.594	0.607	0.522	1.16	2R15
FW Min Flow Recirc	HISO-604-E05	90-DEG ELBOW	6	0.562	0.552	0.417	1.32	2R14
FW Pmp Disch to CVOC	HISO-601-E17	90-DEG ELBOW	18	1.156	1.205	0.944	1.28	2R15
FWH Drn 2 to 1	ISO-2-17-23-E04	90-DEG ELBOW	14	0.375	0.379	0.338	1.12	2R10
FWH Drn 3 to 2	HISO-1715-E01	90-DEG RED. ELBOW	16	0.375	0.396	0.344	1.15	2R14
FWH Drn 4 to 3	HISO-1718-T01	TEE	12	0.375 / 0.375	0.356 / 0.369	0.311 / 0.322	1.14 / 1.15	2R10
FWH Drn 5 to 4	HISO-1722-R01	CON. REDUCER	8	0.322	0.258	0.111	2.33	2R16
MS Bypss Valve Disch	ISO-2-7-3-E03	90-DEG ELBOW	8	0.500	0.469	0.343	1.37	2R14
MSDT to FWH 4 W/INJ	HISO-1712-T01	TEE	6	0.280	0.317	0.222	1.43	2R14
RCIC Pump Turb Exh	N/A	N/A	N/A	N/A	N/A	N/A	N/A	N/A
RWCU Return to FW	N/A	N/A	N/A	N/A	N/A	N/A	N/A	N/A
RWCU Suct RPV Drain	M-295-S77-E05	45-DEG ELBOW	2	0.343	0.298	0.298	1.00	2R14

Table 2.1-5bSample of Components with Highest Predicted Wear Rates, PBAPS Unit 3

CHECWORKS^{STM} SFA-Predicted Thickness vs. Measured Thickness

CHECWORKS^{STM} Wear Rate Analysis Run Definition Name	Component Name	Component Type	Nominal Pipe Size (inches)	Nominal Thickness Tnom (inches)	Measured Thickness Tmeas (inches)	Predicted Thickness Tpred (inches)	Ratio of Measured Thickness to Predicted Thickness	Time of Inspection
Condensate 1 to 2	HISO-1858-E02	45-DEG ELBOW	20	0.594	0.583	0.489	1.19	3R16
Condensate 2 to 3	ISO-3-18-111-E03	90-DEG ELBOW	20	0.594	0.589	0.490	1.20	3R10
Feedwater Htr 3 to 4	HISO-1851-E04	90-DEG ELBOW	20	0.594	0.587	0.474	1.24	3R16
Feedwater Htr 4 to 5	HISO-1852-E04	90-DEG ELBOW	20	0.594	0.612	0.480	1.27	3R14
FW CVOC to Reactor	HISO-656-E15	90-DEG ELBOW	12	0.844	0.904	0.600	1.51	3R17
FW Htr 5 to Pump	HISO-1851-E12	90-DEG ELBOW	20	0.594	0.606	0.502	1.21	3R16
FW Min Flow Recirc	HISO-655-4-E03	90-DEG ELBOW	6	0.562	0.444	0.410	1.08	3R16
FW Pmp Disch to CVOC	HISO-651-E08	90-DEG ELBOW	18	1.156	1.139	0.884	1.29	3R16
FWH Drn 2 to 1	ISO-3-17-110-E02	90-DEG ELBOW	14	0.375	0.354	0.288	1.23	3R16
FWH Drn 3 to 2	HISO-1767-E07	90-DEG ELBOW	12	0.375	0.371	0.267	1.39	3R16
FWH Drn 4 to 3	HISO-1768-E02	90-DEG ELBOW	12	0.375	0.368	0.277	1.33	3R16
FWH Drn 5 to 4	HISO-1769-E06	90-DEG ELBOW	8	0.322	0.312	0.268	1.17	3R16
HPCI Pump Turb Exh	N/A	N/A	N/A	N/A	N/A	N/A	N/A	N/A
MSDT to FWH 4	HISO-1765-E02	90-DEG ELBOW	6	0.280	0.280	0.193	1.45	3R16

Table 2.1-6 Comparison of RWCU System Operating Conditions

Parameter	Units	CLTP	EPU
Thermal Power	MWt	3,514	3,951[1]
RWCU System Inlet Temperature	°F	530	527.5
RWCU System Inlet Pressure (RPV dome pressure, neglecting head)	psia	1,050	1,050
RWCU System Outlet Temperature	°F	433.1	430.2
RWCU System Flow	lbm/hr	147,000	147,000

1. The EPU evaluation of the parameters in this table was conservatively evaluated at 4030 MWt, which is 1.02 x EPU with steam quality = 99.7%.

Table 2.1-7 Comparisons of Chemistry Parameters for CLTP and EPU Cases

Item	Parameter	Units	CLTP Values	EPU Values
1	Maximum sulfate concentration	ppb	0.82	0.95
2	Maximum chloride concentration	ppb	0.38	0.44
3	Maximum reactor water conductivity	μS/cm	0.131	0.143

Table 2.1-8 Selection Process Criteria for Components in the FAC Program

Selection Process Criteria	Description
CHECWORKS™ Model	The PBAPS FAC Program selects components based on the results of the model's output (i.e., wear rate and remaining life). Components are selected from both lines that have not been inspected and from lines that have inspected components.
Industry Experience	The PBAPS FAC program selects inspection components based on OEs from the industry that are applicable to PBAPS. Periodically, OEs are reviewed for PBAPS applicability. If the event is applicable, suitable components are selected to address the issue.
Station Experience	The PBAPS FAC program selects inspection components based on station experiences. Periodically, the corrective action program is reviewed to discover if any situations had occurred that would be applicable to the program, i.e., valve leak-bys, steam leaks, abnormal valve usage (e.g., open when should be closed), etc. The thermal performance report is also reviewed periodically to identify any applicable leaking valves whose piping may need to be inspected. Inspection components are also selected based on requests from system engineers or from design changes.
Re-Inspections	The PBAPS FAC program selects inspection components based on the NSI number. The component's NSI is based on the wear rate and the minimum allowable wall thickness. Components with an NSI that is equal to the next outage are inspected.
Susceptible Non-Modeled	The PBAPS FAC program selects inspection components based on the susceptibility of the non-modeled piping. A large amount of FAC susceptible piping cannot be modeled because of a lack of operating parameter data. This includes almost all of the small-bore piping. This also includes FW heater shells. Lines that are deemed highly susceptible and could have detrimental consequences if failure occurred are slated for inspection.
Engineering Judgment	The PBAPS FAC program also selects inspection components based on engineering judgment. Engineering judgment is used when selecting inspection locations through industry and PBAPS operating experience.

2.2 Mechanical and Civil Engineering

2.2.1 Pipe Rupture Locations and Associated Dynamic Effects

Regulatory Evaluation

SSCs important to safety could be impacted by the pipe-whip dynamic effects of a pipe rupture. Exelon conducted a review of pipe rupture analyses to ensure SSCs important to safety are adequately protected from the effects of pipe ruptures. The review covered: (1) implementation of criteria for defining pipe break and crack locations and configurations; (2) implementation of criteria dealing with special features, such as augmented ISI programs or the use of special protective devices such as pipe-whip restraints; (3) pipe-whip dynamic analyses and results, including the jet thrust and impingement forcing functions and pipe-whip dynamic effects; and (4) the design adequacy of supports for SSCs provided to ensure the intended design functions of the SSCs will not be impaired to an unacceptable level as a result of pipe-whip or jet impingement (JI) loadings. The review focused on the effects that the proposed EPU may have on items (1) through (4) above. The regulatory acceptance criteria are based on GDC-4, which requires SSCs important to safety to be designed to accommodate the dynamic effects of a postulated pipe rupture.

Peach Bottom Current Licensing Basis

The general design criteria listed in RS-001 are those currently specified in 10 CFR 50, Appendix A. The applicable PBAPS principal design criteria predate these criteria. The PBAPS principal design criteria are listed in UFSAR Section 1.5, "Principal Design Criteria." In 1967, the Atomic Energy Commission (AEC) published for public comment a revised set of proposed General Design Criteria (Federal Register 32 FR 10213 (Reference 9), July 11, 1967). Although not explicitly licensed to the AEC proposed General Design Criteria published in 1967, Philadelphia Electric Company (PECO), the predecessor to Exelon, performed a comparative evaluation of the design basis of PBAPS Units 2 and 3 against the AEC proposed General Design Criteria of 1967. The PBAPS UFSAR, Appendix H, "Conformance to AEC (NRC) Criteria," contains this comparative evaluation. UFSAR Appendix H provides a comparative evaluation with each of the groups of criteria set out in the July 1967 AEC release. As to each group of criteria, there is a statement of Exelon's understanding of the intent of the criteria in that group and a discussion of the plant design conformance with the intent of the group of criteria. Following a restatement of each of the proposed criteria is a list of references to locations in the PBAPS UFSAR where there is subject matter relating to the intent of that particular criteria.

For the current GDC listed in the Regulatory Evaluation above, the PBAPS comparative evaluation of the comparable 1967 AEC proposed General Design Criteria (referred to here as "Draft GDC") is contained in PBAPS UFSAR Appendix H: Draft GDC-40 and Draft GDC-42.

PBAPS Pipe Rupture Locations and Associated Dynamic Effects are described in PBAPS UFSAR Sections 3.3.5.2, "Recirculation Line Break," 3.3.5.3, "Steam Line Break Accident," 5.2, "Primary Containment," 12.2, "Design and Description of Structures and Shielding," 14.6.5,

"Main Steam Line Break Accident," Appendix A.10, "High Energy Pipe Break Outside the Primary Containment."

Technical Evaluation

NEDC-33004P-A, Revision 4, "Constant Pressure Power Uprate," Class III, July 2003 (also referred to as CLTR) was approved by the NRC as an acceptable method for evaluating the effects of CPPUs. Section 10.1 of the CLTR addresses the effect of CPPU on HELBs. The results of this evaluation are described below.

High-energy piping systems inside and outside containment are listed in UFSAR Section A.10.4.

Inside containment, the high-energy piping systems potentially affected by EPU are:

- MS,
- MS drains,
- Reactor Core Isolation Cooling (RCIC) steam line,
- High Pressure Coolant Injection (HPCI) steam line,
- FW,
- MS SRV piping (between the MSL and each SRV), and
- RPV head vent line

MS drains, RCIC steam, and HPCI steam line flow rates, pressures, and temperatures are unchanged from CLTP to EPU operating conditions. Detailed modeling of the MS and HPCI steam lines was performed due to the addition of a new spring safety valve (SSV) to the 'C' MS line and the analysis of turbine stop valve closure (TSVC) transient. For PBAPS, HELB locations in MS piping inside containment are not based on stress criteria. Thus, the change in stress in the MS piping does not result in new break locations. Additionally, revised MS analysis effects on other MS attached piping did not result in any additional break locations.

Outside containment, high-energy piping systems include:

- MS,
- FW,
- HPCI (normally pressurized steam supply to HPCI turbine),
- RCIC (normally pressurized steam supply to RCIC turbine),
- RWCU, and
- High Energy Sampling and Instrument Sensing Lines

Of these, the only systems affected by EPU are MS, FW, and RWCU. While MS pressures and temperatures do not increase with EPU, the piping stress analysis has been reconstituted for EPU.

A review was performed of piping stresses that increased due to EPU and postulated pipe break locations. The review was in accordance with the requirements of the original license basis methodology. No changes to the implementation of the existing criteria for defining pipe break and crack locations and configurations are being made for EPU. No new break or crack locations are required to be postulated as a result of the increased piping stresses associated with EPU.

No changes to the implementation of the existing criteria for special features, such as augmented ISI programs or the use of special protective devices, such as pipe-whip restraints are being made for EPU.

For EPU, HELBs are evaluated for their effects on equipment qualification. PBAPS meets all CLTR dispositions. The topics addressed in this evaluation are:

Topic	CLTR Disposition	PBAPS Result
Steam lines	[[	Meets CLTR Disposition
Liquid lines	]]	Meets CLTR Disposition

2.2.1.1 Steam Line Breaks

The CLTR states that there is no effect on steam line breaks because steam conditions at postulated break locations are unchanged. Therefore, EPU has no effect on the mass and energy releases from a HELB in a steam line.

A review of the heat balances produced for the PBAPS EPU confirmed that [[
]]

The evaluation of the steam line HELB events in the PBAPS licensing basis meet all CLTR dispositions.

2.2.1.2 Liquid Line Breaks

As stated in Section 10.1 of the CLTR, EPU may increase subcooling in the reactor vessel, which may lead to increased break flow rates for liquid line breaks. For PBAPS, the increase in vessel subcooling could affect the RWCU line break analysis. In addition, operation at EPU conditions requires an increase in the MS and FW flows, which results in an increase in FW system pressures. This increase in FW system pressure may lead to increased break flow rates for FW line breaks (FWLB). For PBAPS, mass and energy releases for HELBs in the RWCU and FW systems may be affected by EPU and were re-evaluated at EPU conditions.

The [[ ]] evaluation of liquid line breaks included the RWCU and FW systems as well as the effect of increased RWCU and FW operating pressure on pipe whip and JI. The results of the PBAPS evaluation of liquid line breaks are provided in Table 2.2-1.

2.2.1.2.1 *RWCU Line Breaks*

The design basis RWCU line break analysis has been revised for changes not related to EPU. For the new analysis, RWCU line break mass and energy releases are calculated to bound both CLTP and EPU conditions. Also, new compartment pressure and temperature responses resulting from the increase in RWCU line break mass and energy releases were calculated. Structural effects of the new peak pressures were reviewed and found to be acceptable. The effects of increased peak calculated room temperatures resulting from RWCU line breaks are addressed in the EPU EQ analysis. See Section 2.3.1 for EQ results.

2.2.1.2.2 *Feedwater System Line Break*

The CLTP mass and energy releases for FWLBs are affected by changes in the FW system including increased FW flow and a 2°F increase in FW temperature for operation at 102% of EPU thermal power. The EPU evaluation concludes that the associated minor changes in FWLB mass and energy releases will not challenge the bases for the HELB analysis of record disposition which concludes that the effects of a FWLB are bounded by the effects of the postulated MSL breaks.

The effects of a FW System Line Break on MS tunnel peak pressures and temperatures are bounded by a Main Steam Line Break (MSLB) in the MS tunnel. For the portion of the smaller RWCU piping attached to the FW piping in the MS tunnel, mass and energy releases from breaks in the smaller RWCU piping are bounded by the FW break mass and energy releases.

2.2.1.2.3 *Pipe Whip and Jet Impingement*

Pipe whip and JI loads resulting from high energy pipe breaks are a function of system pressure, temperature, and size, as well as proximity to relatively constant pressure sources connected to the line, and the effect of friction or line area restrictions between the break and the constant pressure source.

Inside containment, the only high-energy piping that experiences an increase in operating pressure due to EPU is in the FW system. Outside containment, the only high-energy piping experiencing an increase in operating pressure due to EPU is in the FW and RWCU system.

Increased FW fluid conditions associated with EPU will have a negligible effect on FWLB mass and energy release rates. Therefore, EPU will have a negligible effect on FW pipe whip and JI and will still be bounded by current design analyses.

The potential effect of increased FW system and RWCU operating pressures at the existing HELB break locations relative to the subsequent effects of pipe whip (targets) and JI loads were evaluated. The resulting EPU pipe whip (targets) and JI loads are bounded by the current licensing basis pipe whip and JI loads.

The adequacies of supports relative to pipe whip and JI loads are evaluated in Section 2.2.2.

Therefore, PBAPS meets all CLTR dispositions for liquid line breaks.

Conclusion

Exelon has reviewed the evaluations related to determinations of rupture locations and associated dynamic effects and concludes the effects of the proposed EPU have been adequately addressed. Exelon further concludes the SSCs important to safety will continue to meet the requirements of the current licensing basis, following implementation of the proposed EPU. Therefore, Exelon finds the proposed EPU acceptable with respect to the determination of rupture locations and dynamic effects associated with the postulated rupture of piping.

2.2.2 Pressure-Retaining Components and Component Supports

Regulatory Evaluation

Exelon has reviewed the structural integrity of pressure-retaining components (and their supports) designed in accordance with the ASME Boiler and Pressure Vessel Code (B&PV Code), Section III, Division 1 (Reference 38), and GDCs 1, 2, 4, 14, and 15. The review focused on the effects of the proposed EPU on the design input parameters and the design-basis loads and load combinations for normal operating, upset, emergency, and faulted conditions. The review covered: (1) analyses of FIV; and (2) analytical methodologies, assumptions, ASME Code editions, and computer programs used for these analyses. The review also included a comparison of the resulting stresses and cumulative fatigue usage factors (CUFs) against the code-allowable limits. The regulatory acceptance criteria are based on: (1) 10 CFR 50.55a and GDC-1, insofar as they require SSCs important to safety be designed, fabricated, erected, constructed, tested, and inspected to quality standards commensurate with the importance of the safety functions to be performed; (2) GDC-2, insofar as it requires SSCs important to safety be designed to withstand the effects of earthquakes combined with the effects of normal or accident conditions; (3) GDC-4, insofar as it requires SSCs important to safety be designed to accommodate the effects of and to be compatible with the environmental conditions associated with normal operation, maintenance, testing, and postulated accidents; (4) GDC-14, insofar as it requires the RCPB be designed, fabricated, erected, and tested so as to have an extremely low probability of rapidly propagating fracture; and (5) GDC-15, insofar as it requires the RCS be designed with margin sufficient to ensure that the design conditions of the RCPB are not exceeded during any condition of normal operation.

Peach Bottom Current Licensing Basis

The general design criteria listed in RS-001 are those currently specified in 10 CFR 50, Appendix A. The applicable PBAPS principal design criteria predate these criteria. The PBAPS principal design criteria are listed in UFSAR Section 1.5, "Principal Design Criteria." In 1967, the Atomic Energy Commission (AEC) published for public comment a revised set of proposed General Design Criteria (Federal Register 32 FR 10213 (Reference 9), July 11, 1967). Although not explicitly licensed to the AEC proposed General Design Criteria published in 1967,

Philadelphia Electric Company (PECO), the predecessor to Exelon, performed a comparative evaluation of the design basis of PBAPS Units 2 and 3 against the AEC proposed General Design Criteria of 1967. The PBAPS UFSAR, Appendix H, "Conformance to AEC (NRC) Criteria," contains this comparative evaluation. UFSAR Appendix H provides a comparative evaluation with each of the groups of criteria set out in the July 1967 AEC release. As to each group of criteria, there is a statement of Exelon's understanding of the intent of the criteria in that group and a discussion of the plant design conformance with the intent of the group of criteria. Following a restatement of each of the proposed criteria is a list of references to locations in the PBAPS UFSAR where there is subject matter relating to the intent of that particular criteria.

For the current GDC listed in the Regulatory Evaluation above, with the exception of current GDC-15, the PBAPS comparative evaluation of the comparable 1967 AEC proposed General Design Criteria (referred to here as "Draft GDC") is contained in PBAPS UFSAR Appendix H: Draft GDC-1, Draft GDC-2, Draft GDC-5, Draft GDC-9, Draft GDC-33, Draft GDC-40, and Draft GDC-42. There is no Draft GDC directly associated with current GDC-15.

Pressure Retaining Components and Component Supports are described in PBAPS UFSAR Sections 2.5.3, "Seismology," 3.3, "Reactor Vessel Internals Mechanical Design," 4.2, "Reactor Vessel and Appurtenances Mechanical Design," 4.3, "Reactor Recirculation System," 12, "Structures and Shielding," Appendix I, "In-service Inspection and Testing Programs," and Appendix M, "Containment Report."

In addition to the evaluations described in the PBAPS UFSAR, PBAPS's systems and components were evaluated for license renewal. Systems and system component materials of construction, operating history, and programs used to manage aging effects were evaluated for plant license renewal and documented in the "Safety Evaluation Report Related to the License Renewal of Peach Bottom Atomic Power Station, Units 2 and 3," NUREG-1769, dated March 2003 (Reference 10). Systems and system components, programs used to manage aging effects, and time limited aging analyses are documented in NUREG-1769, Sections 2.3, 2.4.13, 3.0.3, 3.1, 3.2, 3.3, 3.4, 3.5, 4.2, and 4.3.

Technical Evaluation

NEDC-33004P-A, Revision 4, "Constant Pressure Power Uprate," Class III, July 2003 (also referred to as CLTR) was approved by the NRC as an acceptable method for evaluating the effects of CPPUs. Section 3.2.2, 3.4 and 3.5 of the CLTR addresses the effect of CPPU on Reactor Vessel Structural Evaluation, FIV and Piping Evaluation, respectively. The results of this evaluation are described below.

2.2.2.1 Flow-Induced Vibration

The FIV evaluation addresses the influence of an increase in flow during EPU on RCPB piping and RCPB piping components.

Key applicable structures include the RRS piping and suspension, the MS system piping and suspension, the FW system piping and suspension and the branch lines attached to the MS system piping or FW system piping.

PBAPS meets all CLTR dispositions. The topics addressed in this evaluation are:

Topic	CLTR Disposition	PBAPS Result
Structural Evaluation of Recirculation Piping	[[	Meets CLTR Disposition
Structural Evaluation of Main Steam and FW Piping		Meets CLTR Disposition
Safety-Related Thermowells and Probes	]]	Meets CLTR Disposition

2.2.2.1.1 *Structural Evaluation of Recirculation Piping*

The CLTR states that there is no significant increase in the recirculation flow rate at EPU conditions.

The recirculation system drive flow increased from 18.44 Mlb/hr per loop at CLTP to 18.48 Mlb/hr per loop at EPU, resulting in an increase of 0.22% from CLTP to EPU operation. Consequently, the FIV levels of the RRS components are expected to remain essentially the same. Because RRS flow rates for EPU are essentially the same as previously experienced, no further evaluation or testing of the FIV levels of the RRS piping, branch piping (e.g., attached Residual Heat Removal (RHR) piping), or its suspension system is required.

The FIV effect on RRS piping inside containment at PBAPS meets all CLTR dispositions because the nominal reactor dome pressure remains the same and the RRS maximum drive flow does not increase more than 5%.

2.2.2.1.2 *Structural Evaluation of Main Steam and Feedwater Piping*

The CLTR states that MS and FW flow rates increase due to the power uprate.

As a result of the increased flow rates and flow velocities, the MS and FW piping experience increased vibration levels, approximately proportional to the square of the flow velocities. Thus, for PBAPS, vibration levels may increase by up to 54% of OLTP. The ASME Code (NB-3622.3) and nuclear regulatory guidelines require some vibration test data be taken and evaluated for these high energy piping systems during initial operation at EPU conditions. Vibration data for the MS and FW piping inside containment will be acquired using remote sensors, such as accelerometers and displacement probes as appropriate. A piping vibration

startup test program, which meets the ASME code and regulatory requirements, will be performed.

Therefore, the assessment of the structural evaluation of MS and FW Piping meets all CLTR dispositions. FIV testing of the MS and FW piping system will be performed during EPU power ascension. See EPU LAR Attachment 13. Additional information related to the MS piping is provided in Section 2.5.4.1.1.

2.2.2.1.3 *Safety-Related Thermowells and Probes*

As explicitly stated in Section 3.4 of the CLTR, MS and FW flow rates increase due to the power uprate. [[ ]] of safety-related thermowells and probes in the MS and FW piping systems at EPU conditions.

The MS system flow increased from 3.6 Mlb/hr per line at CLTP to 4.14 Mlb/hr per line resulting in an increase of 14.9% during EPU operation. The FW system flow increased from 7.256 Mlb/hr per line at CLTP to 8.27 Mlb/hr per line resulting in an increase of 14% during EPU operation. The RRS thermowell evaluation was performed with a bounding ICF RRS system flow rate of 18.81 Mlb/hr. The safety-related thermowells and probes in the MS, FW and RRS piping systems were evaluated and found to be adequate for EPU.

The methodology used to evaluate components for FIV for EPU is described in Section 3.4.1 of the CLTR. This evaluation utilizes SAP4G07 to develop the dynamic finite element models of the main steam system (MSS)/FW System/RRS thermowells and sample probes.

Three-dimensional beam elements are used to model the thermowell and sample probe sockolet/pipe weld. At each nodal point of the beam elements, six degrees of freedom are assumed: three translations and three rotations. At the sockolet/pipe weld to the outer pipe wall, all six degrees of freedom are fixed. The masses of the thermowells and sample probes and sockolet/pipe weld are lumped at the nodal points, which include both the structural mass and fluid mass displaced by the thermowells and sample probes. These added masses are used to account for the effects of fluid on the thermowells and sample probes vibration responses.

The non-dimensional quantity defined as V_r, termed reduced velocity (Reference 38, Figure N-1323-1), is used to assess whether or not high FIV response is likely. To assess whether or not synchronization of vortex shedding frequency and tube natural frequency occurs, a damping parameter (Reference 38, Figure N-1323-1) is calculated. To calculate the structural response, a non-dimensional parameter, termed reduced damping (Reference 38, N-1324.1 Equation 76), was calculated:

For off resonance (non lock-in) condition, the structural response is ordinarily small and was calculated using the standard method (Reference 38, N-1324.2, first paragraph). For thermowell and sample probe resonant structural response, Reference 38, Table N-1324.2(a)-1 was used.

The total vibratory stress was calculated by using the square root of the sum of the squares (SRSS) of the oscillating lift and drag forces. These are unlikely to occur at the same time and

hence it is conservative to use the SRSS method. The results of the analyses are presented below:

Component Analyzed	Unit	Total Flow Induced Vibratory Stress Value at EPU	ASME Code Allowable Stress
MSS Thermowell (TW-142)	psi	6,881	7,690 psi for Carbon Steel
FW System Thermowell (TW-140)	psi	294	7,690 psi for Carbon Steel
FW System Thermowell (TW-54)	psi	1,858	7,690 psi for Carbon Steel
FW System Sample Probe (SE-16)	psi	2,360	10,880 psi for Stainless Steel
RRS Thermowell (TW-107/145)	psi	2,834	10,880 psi for Stainless Steel

Therefore, PBAPS meets all CLTR dispositions for safety-related thermowells and probes.

2.2.2.2 Piping Evaluation

2.2.2.2.1 *Reactor Coolant Pressure Boundary Piping (Non-FIV) Evaluation*

The RCPB systems evaluation consists of a number of safety-related piping subsystems that move fluid through the reactor and other safety systems.

PBAPS meets all CLTR dispositions. The topics addressed in this evaluation are:

Topic	CLTR Disposition	PBAPS Result
Structural Evaluation for Unaffected Safety-Related Piping	[[	Meets CLTR Disposition
Structural Evaluation for Affected Safety-Related Piping	]]	Meets CLTR Disposition

2.2.2.2.1.1 Structural Evaluation for Unaffected Safety-Related Piping

As stated in Section 3.5.1 of the CLTR, the flow, pressure, temperature, and mechanical loading for most of the RCPB piping systems do not increase for EPU. Consequently, there is no change in stress and fatigue evaluations.

[[

]]

[[

]]

[[

]] and therefore, PBAPS meets all CLTR dispositions for the structural evaluation for unaffected safety-related piping. Table 2.2-2 provides the justification for [[ ]]

Section 2.8.4.2 demonstrates that the RCPB piping remains below the ASME pressure limit during the most severe pressurization transient.

Pipe Whip and Jet Impingement

Pipe whip and JI loads resulting from high energy pipe breaks are a function of system pressure, temperature, and size, as well as proximity to relatively constant pressure sources connected to the line, and the effect of friction or line area restrictions between the break and the constant pressure source. The resulting EPU pipe whip and JI loads are bounded by the current licensing basis pipe whip and JI loads.

Additionally, a review of pipe stress calculations determined the projected FW operating temperature under EPU is below the current design basis calculation values with margin. Therefore, there are no increased pipe stress levels above the thresholds required for postulating HELBs, except at locations already evaluated for breaks. For MS piping, break locations are not based on stress criteria. As a result, EPU conditions do not result in new HELB locations, nor affect existing HELB evaluations of pipe whip restraints and jet targets.

2.2.2.2.1.2 Structural Evaluation for Affected Safety-Related Piping

As stated in Section 3.5.1 of the CLTR, the FW and MS piping and associated branch piping up to the first anchor or support will experience an increase in the flow, pressure, and/or temperature resulting in an increase in operating stress and fatigue. For all systems, the maximum stress levels and fatigue analysis results were reviewed based on specific increases in temperature, pressure, and flow rate (see Tables 2.2-3a and 2.2-3b). EPU also increases the operating pipe support loads due to the above effects as well as increased fluid transient TSVC loads that result from the increased steam flow rates.

The analysis of record for MS piping did not evaluate TSVC loads. A new analysis was performed including the TSVC loads which determined that the interface loads on snubbers,

struts, guides, and flange connections at EPU conditions are within the design limits (capacities) of these components with the implementation of new supports and support modifications as described in EPU LAR Attachment 9. The analysis of record for FW piping inside containment was performed to pressures and temperatures which bound the increased EPU operating conditions. Therefore, design loads and stresses remain bounding for EPU.

For RCPB MS piping outside containment, detailed TSVC fluid transient forcing functions were developed and a piping stress analysis was performed to determine loads at EPU. Direct time history input and analyses for the TSVC transient were used to generate results shown in Table 2.2-5a. The MS pipe stress analysis was revised to evaluate the increased TSVC fluid transient loading with EPU, and to evaluate discrepant conditions found in the existing analysis of record. The reconstituted MS analysis resulted in MS piping outside containment meeting all Code criteria, with implementation of required pipe support modifications, as described in EPU LAR Attachment 9. There are no pipe supports on the RCPB MS piping outside containment, between the containment penetration anchor and the outboard main steam isolation valve (MSIV).

The FW system has been evaluated and found to meet the appropriate code criteria for the EPU conditions, based on the design margins between calculated stresses and code limits in the original design. All piping stresses are below the code allowables of the plant code of record. The MS piping was analyzed for TSVC loads and the addition of a new SSV. Stresses in the MS and attached piping are below the code allowables with the implementation of required pipe support modifications. MS pipe support modifications described in EPU LAR Attachment 9 will be implemented prior to EPU operation.

The pipe supports of the systems affected by EPU loading increases are reviewed to determine if there is sufficient margin to code acceptance criteria to accommodate the increased loadings. EPU will not result in support load increases for RCPB FW piping inside containment. The reconstituted MS analysis resulted in MS piping inside containment meeting all Code criteria, with implementation of required pipe support modifications. EPU will not result in pipe stress or support load increases for RCPB FW piping outside containment. The reconstituted MS analysis resulted in MS piping outside containment meeting all Code criteria, with implementation of required pipe support modifications. MS pipe support modifications, described in EPU LAR Attachment 9, will be implemented prior to EPU operation.

Main Steam and Associated Piping System Evaluation

For PBAPS, an increase in flow, pressure, temperature and mechanical loads was evaluated on a plant-specific basis consistent with the methods specified in Appendix K of ELTR. [[ ]] are required to demonstrate that the calculated stresses are less than the code allowable limits in accordance with the requirements of the applicable code of record in the existing design basis stress report.

The MS and associated branch piping inside and RCPB piping outside containment was evaluated for compliance with ANSI B31.1,"Power Piping," 1973 Edition including Summer 1973 Addenda stress criteria (Reference 39), including the effects of EPU on piping stresses,

piping supports including the associated building structure, penetrations, piping interfaces with the RPV nozzles, flanges, and valves. Allowable stress values for MS piping inside containment and associated branch lines were taken from ANSI B31.1 2004 Edition including the 2005 Addendum (Reference 40). The evaluations assumed the implementation of new supports and support modifications as described in EPU LAR Attachment 9.

Because the MS piping pressures and temperatures are unchanged by EPU, there is no effect on the analyses for these parameters. Seismic inertia loads, seismic building displacement loads, and SRV discharge loads are not affected by EPU, thus, there is no effect on the analyses for these load cases. Other external loading conditions, such as chugging, and condensation oscillation (CO) also are not changed by EPU (see Section 2.6.1.2.1). The increase in MS flow results in increased fluid transient loads from a TSVC transient. The TSVC loads bound the MSIV closure loads because the MSIV closure time is significantly longer than the TSV closure time. A new analysis was performed on MS and associated branch piping which includes TSVC transient and the addition of a SSV.

The TSVC transient loading will increase due to the increase in the MS flow rate under EPU. Detailed and conservative modeling of this transient was performed to ensure that components, pipe stress, and support loads do not exceed their allowable code limits.

Pipe Stresses

A review of the increase in flow associated with EPU indicates that piping stress changes do not result in stress limits being exceeded for the MS system and attached branch piping or for RPV nozzles and containment penetrations with the implementation of new supports and support modifications described in EPU LAR Attachment 9 of the PBAPS EPU license amendment request. The revised design analyses have sufficient margin between calculated stresses and ANSI, B31.1 allowable limits (see Table 2.2-4a) to justify operation at EPU conditions. The pressure and temperature of the MS piping are unchanged for the EPU.

Similarly, the branch pipelines (Safety Relief Valve Discharge Line (SRVDL), RCIC, HPCI, RPV Head Vent, and MS drains including MSIV Drain) connected to the MS headers were evaluated to determine the effect of the increased MS flow on the lines. This evaluation concluded that there is no adverse effect on the existing MS branch line qualifications due to the increased MS flows resulting from EPU. As with the MS piping, the pressures and temperatures for these branch pipelines do not change as a result of EPU. A review was performed of postulated pipe break locations. The review was conducted in accordance with the requirements of the current license basis methodology. As a result of this review, no new postulated break locations were identified. Based on existing margins available for the MS piping, it was concluded that EPU does not result in reactions in excess of the current design capacity.

The analysis of MS piping outside containment was revised to evaluate the increased TSVC fluid transient loading with EPU. With implementation of support modifications as described in EPU LAR Attachment 9, the revised analysis for the MS system outside containment demonstrates that the design has sufficient margin between calculated stresses and the allowable limits in the code of

record, ANSI B31.1 1973 Edition including Summer 1973 Addenda, to justify operation at EPU conditions. The pressure and temperature of the MS piping outside containment is slightly reduced with EPU.

Pipe Supports

Based on the revised MS pipe stress analysis, additional pipe supports and modifications to existing supports are required on MS piping inside containment to accommodate the new analyzed conditions with design margin to Code allowables. The MS support modifications will be implemented prior to EPU operation. The MS piping inside containment is evaluated for the effects of flow increase on the piping snubbers, hangers, struts, and pipe whip restraints. Evaluation of supports and anchors is available upon request and modifications will continue to be refined after the PBAPS EPU license amendment request submittal.

Main Steam Isolation Valves

The MSIVs are part of the RCPB, and perform the safety function of steam line isolation during certain abnormal events and accidents. The MSIVs must be able to close within a specified time range at all design and operating conditions. They are designed to satisfy leakage limits set forth in the plant TSs. These design requirements are not adversely impacted by increased EPU flow, thus the original design remains adequate for EPU conditions.

The MSIVs have been evaluated, as discussed in Section 4.7 of ELTR2, Supplement 1 (Reference 4). The evaluation covers both the effects of the changes to the structural capability of the MSIV to meet pressure boundary requirements, and the potential effects of EPU-related changes to the safety functions of the MSIVs. The generic evaluation from ELTR2 is based on (1) a 20% thermal power increase, (2) an increased operating dome pressure to 1095 psia, (3) a reactor temperature increase to 556°F, and (4) steam and FW flow increases of about 24%. Table 1-2 provides the Maximum Nominal Dome Pressure and Temperature as well as the changes in steam and FW flows. From these parameters, it can be determined that the evaluation from ELTR2 is applicable to PBAPS.

The MSIV has design features that ensure that MSIV closure time is maintained within the stroke time limits. The closing time of the MSIVs is controlled by the design of the hydraulic control valves and the function of the hydraulic damper. Therefore, the MSIV performance is bounded by conclusions of the evaluation in Section 4.7 of ELTR2, and the PBAPS MSIVs are acceptable for EPU operation.

Feedwater System Evaluation

The temperature and the pressure changes are insignificant for EPU and are bounded by those used in the analysis of record. The current licensing basis for the reactor FW system inside containment complies with USAS B31.1, 1967 Edition (Reference 41) for the effect of thermal expansion displacement on the piping snubbers, hangers, and struts. Piping interfaces with RPV nozzles, penetrations, flanges, and valves also remain valid per current licensing basis. Note that the flow change of ~15.1 % does not affect the reactor FW piping system loads and stresses

because fluid transient and fatigue loads are not a part of the design basis in the original stress calculation.

This discussion also applies to the FW system and associated branch piping outside containment. The FW piping design was evaluated for compliance with the analysis code of record stress criteria (ANSI B31.1 1973 Edition with Summer 1973 Addenda).

Because the FW system piping operating pressures and temperatures increase slightly due to EPU, the effect of these parameters on the existing analyses was evaluated. Seismic inertia loads, and seismic building displacement loads are not affected by EPU; thus, there is no effect on the analyses for these load cases. Other external loading conditions are not changed by EPU. For the FW piping outside containment, there is no FW system fluid transient analysis in the existing design basis analysis so the increase in FW system flow has no effect on the original analysis.

Pipe Stresses

For FW piping inside containment, a review of the changes in operating pressure, temperature and flow associated with EPU indicates that piping stress changes do not result in stress limits being exceeded for the reactor FW piping system, for RPV nozzles, and at postulated pipe break locations (see Table 2.2-4b). The original design analyses are performed for conditions which bound all EPU operating modes in the FW piping system. Therefore, the current FW stress reports are adequate at EPU conditions.

This discussion also pertains to the RCPB portion of the FW piping outside containment. A review of the increase in flow, operating pressure, and temperature associated with EPU indicates that piping load changes do not result in load limits being exceeded for the FW piping system and attached branch piping.

A review was also performed of postulated pipe break locations in accordance with the original license basis methodology. As a result of this review, no new postulated break locations were identified. Because the fluid conditions in the FW piping design analyses bound the FW operating conditions at EPU, it was concluded that EPU does not have an adverse effect on the FW piping design.

Pipe Supports

A review of the changes in operating pressure, temperature and flow associated with EPU indicates that piping load changes do not result in load limits being exceeded for the FW piping system; therefore, the pipe supports for the FW piping system are adequate at EPU conditions. The original design analyses are performed for conditions which bound all EPU operating modes in the FW piping system.

A review of the changes in temperature associated with EPU indicates that the effects of thermal expansion displacements do not change for the FW piping system; therefore, the current design remains valid. The original design analyses are performed for conditions which bound all EPU operating modes in the FW piping system.

Seismic inertia loads and seismic building displacement loads are not affected by EPU, thus, there is no effect on the analyses for these load cases. Other external loading conditions such as chugging, and CO also are not changed by EPU.

The FW system piping outside containment was evaluated for the effects of EPU flow, operating pressure, and temperature increase on the piping design analyses. Because the fluid conditions in the existing analyses bound the EPU conditions, it was concluded that EPU does not have an adverse effect on FW pipe support design.

Other Piping Evaluation

As previously noted, the nominal operating pressure and temperature of the reactor are not changed by EPU. Aside from MS and FW, no other system connected to the RCPB experiences a material increase in flow rate at EPU conditions. Only minor changes to fluid conditions are experienced by these systems due to higher steam flow from the reactor and the subsequent change in fluid conditions within the reactor. Other external loading conditions, such as chugging and CO, also are not changed by EPU (see Section 2.6.1.2.1). Additionally, piping dynamic loads due to SRV discharge at EPU conditions are bounded by those used in the existing analyses. These effects have been evaluated for the RCPB portion of the RPV head vent line, SRV discharge piping and RWCU piping, as required.

These systems were previously evaluated for compliance with the ASME or USAS/ANSI Code stress criteria as required. Because none of these piping systems experience any significant change in operating conditions, they are all acceptable as currently designed.

Therefore, PBAPS meets all CLTR dispositions for RCPB piping.

2.2.2.2.2 *Balance-of-Plant Piping (BOP) Systems*

The BOP piping systems evaluation consists of a number of piping subsystems that move fluid through systems outside the RCPB piping.

PBAPS meets all CLTR dispositions. The topics considered in this section are:

Topic	CLTR Disposition	PBAPS Result
Structural Evaluation for Unaffected Safety-Related Piping	[[	Meets CLTR Disposition
Structural Evaluation for Unaffected Non-Safety Related Piping		Meets CLTR Disposition
Structural Evaluation for Affected Safety-Related Piping		Meets CLTR Disposition
Structural Evaluation for Affected Non-Safety Related Piping	]]	Meets CLTR Disposition

2.2.2.2.2.1 Structural Evaluation for Unaffected BOP Piping

As stated in Section 3.5.2 of the CLTR, the flow, pressure, temperature, and mechanical loading for some BOP piping systems do not increase for EPU. Consequently, there is no change in stress and fatigue evaluations and these BOP piping systems meet all CLTR dispositions.

The following piping for BOP and NSSS outside containment only were confirmed to be unaffected by EPU conditions because either the flow, temperature, pressure, or other mechanical loads do not change in the system for EPU or the change is insignificant and has no effect on the piping system design:

- Auxiliary Steam Piping
- Circulating Water Piping
- Turbine Building Closed Cooling Water (TBCCW) Piping
- Condensate and Refueling Water Storage and Transfer Piping (except for modifications required to increase Condensate Storage Tank (CST) inventory for Appendix R scenarios that credit the CST – Section 2.5.1.4.1)
- Condenser Air Removal Piping
- CRD Piping
- DW Chilled Water Piping
- Fuel Pool Cooling (FPC) and Cleanup Piping
- Liquid Radwaste Piping
- Off Gas Piping
- Plant Chilled Water Piping
- Service Water (SW) Piping
- Post-Accident Sampling Piping
- Process Sampling Piping
- RWCU Piping
- Standby Liquid Control (SLC) Piping (Outside Containment)
- Emergency Service Water (ESW) Piping
- Reactor Building Closed Cooling Water (RBCCW) Piping
- SRVDL Piping Beyond the First Anchor to the Quenchers
- CS Piping Outside Containment
- RCIC Piping Outside Containment
- HPCI Piping Outside Containment

2.2.2.2.2.2 Structural Evaluation for Affected BOP Piping

As stated in Section 3.5.2 of the CLTR, the FW and MSL piping including the associated branch piping will experience an increase in the flow, pressure, and/or temperature resulting in an increase in stress.

The PBAPS piping systems determined to be affected by EPU operation include:

- RHR Piping (RHR heat exchanger cross-tie modification)
- High Pressure Service Water (HPSW) Piping (HPSW cross-tie modification)
- MS Piping (Outside Containment)
- Extraction Steam Piping
- FW Piping (Outside Containment)
- Condensate Piping
- Moisture Separator Drains Piping
- FW Heater Vents and Drains Piping
- Cross Around Relief Valve (CARV) Discharge Piping
- Condensate Demineralizer Piping (Condensate Polisher Modifications)

For those systems with analyses, the maximum stress level analysis results were reviewed based on specific increases in temperature, pressure and flow rate (see Tables 2.2-5a through 2.2-5f and Table 2.2-6). These piping systems have been evaluated for the appropriate code criteria for the EPU conditions based on the design margins between actual stresses and code limits in the original design. All piping stresses have been found to be below the code allowable limits of the present code of record. MS pipe support modifications described in EPU LAR Attachment 9 are required for EPU, and will be implemented prior to EPU operation.

CARV setpoints will be increased with EPU, to provide margin above the normal operating cross around pressure. Dynamic loading on the CARV discharge piping will increase during relieving conditions with higher set pressures. For EPU, a new hydraulic transient analysis of CARV discharge was performed based on the increased CARV setpoints. The hydraulic transient analysis provides input to stress analysis of the CARV discharge piping.

As stated in Section 2.5.4.4, at increased condensate flows with EPU, the condensate demineralizers require additional capacity to support full flow operation. Condensate and condensate demineralizer backwash piping will be modified as required with the condensate demineralizer modifications for EPU.

In order to eliminate Containment Accident Pressure (CAP) credit for RHR pump net positive suction head (NPSH) margin, RHR and HPSW cross-tie modifications will be installed for EPU to increase torus heat removal capability. RHR and HPSW pipe stress analyses are revised for the

affected piping subsystems under the cross-tie modifications. These modifications are described in EPU LAR Enclosures 9c and 9d.

The original code of record for non-safety related piping is USAS B31.1 Power Piping Code, 1967 Edition. BOP piping systems which have been modified or reanalyzed are analyzed to ANSI B31.1 Power Piping Code, 1973 Edition including Summer 1973 Addenda, or ASME Section III.

For those systems that do not require a detailed analysis, pipe routing and flexibility was determined to remain acceptable.

A review was performed of postulated high energy pipe break locations in accordance with the requirements of the original license basis methodology. As a result of this review, no new postulated break locations were identified. Details regarding analyses pertaining to the dynamic effects of high-energy piping failures outside containment are provided in Section 2.2.1 and the environmental effects of piping failures outside containment are discussed in Section 2.5.1.3.

Main Steam and Associated Piping System Evaluation

The MS piping system outside containment was evaluated for compliance with all codes and standards that are captured under PBAPS criteria, including the effects of EPU on piping stresses, equipment nozzles, pipe break postulation, flanges and valves.

Temperatures and pressures in the MS piping, including attached MS branch piping and turbine bypass piping, will not increase with EPU. Because MS piping pressures and temperatures do not increase with EPU, there was no effect on the analyses due to these parameters. The increase in MS flow results in increased transient forces from the TSV closure. The TSVC transient load is one of the individual loads experiencing the most significant increase for the qualification of MS piping and supports at EPU conditions.

For MS piping outside containment, the pipe stress analysis was revised to evaluate the increased TSVC fluid transient loading with EPU. Detailed TSVC fluid transient forcing functions were developed and the piping stress analysis was reconstituted to determine loads at EPU. Direct time history input and analyses for the TSVC transient were used to generate pipe stress results shown in Table 2.2-5a. The reconstituted MS analysis resulted in MS piping outside containment meeting all Code criteria, with implementation of required pipe support modifications. The MS support modifications described in EPU LAR Attachment 9 will be implemented prior to EPU operation.

Pipe Stresses

Reactor dome pressure and temperature remain unchanged for EPU. MS piping pressure and temperature at the TSV decrease slightly with increased friction losses at EPU. The results of the EPU stress analysis for MS outside containment demonstrate that the piping design has sufficient margin between calculated stresses and code allowable limits (see Table 2.2-5a) to justify operation at EPU conditions, with implementation of required support modifications, as described in EPU LAR Attachment 9.

Pipe Supports

Based on the revised MS pipe stress analysis, additional pipe supports and modifications to existing supports are required on MS piping outside containment to accommodate the new analyzed conditions with design margin to Code allowables. The MS support modifications described in EPU LAR Attachment 9 will be implemented prior to EPU operation.

Therefore, the MS and associated piping meets all CLTR dispositions.

Feedwater System Evaluation

Operation at EPU conditions increases stresses on piping and piping system components due to slightly higher operating temperatures and pressures. Higher FW operating pressures result from the higher head loss associated with a higher FW flow rate. The FW piping systems outside containment have been evaluated for the appropriate code criteria for the EPU conditions based on the design margins between actual stresses and applicable code limits. All piping is below the code allowable of the present code of record. No new postulated pipe break locations were identified.

Pipe Stresses

Because the FW system piping pressures and temperatures increase slightly due to EPU, the effects of these parameters on the existing analyses were evaluated. Existing FW piping analyses are performed to design pressures and temperatures which remain bounding relative to EPU conditions. Seismic inertia loads, and seismic building displacement loads are not affected by EPU, thus, there is no effect on the analyses for these load cases. Other external loading conditions also are not changed by EPU. For the BOP FW piping outside containment, there is no FW system fluid transient analysis in the existing design basis analysis, so the increase in FW system flow has no effect on the original analysis.

The FW temperature and pressure changes are insignificant relative to piping design for EPU. Also, fluid conditions in the FW piping design analyses bound the FW operating conditions at EPU. The flow change does not affect the FW piping design system because water hammer transient was not a design load in the original stress analyses. Therefore, the current licensing basis for the FW system complies with the code of record for the effect of thermal expansion displacement on the piping snubbers, hangers, and struts. Piping interfaces with penetrations, flanges, and valves also remain valid per current licensing basis.

A review was also performed of postulated high energy pipe break locations in accordance with the requirements of the original license basis methodology. As a result of this review, no new postulated break locations were identified.

Based on existing margins available for the FW piping, it was concluded that EPU does not have an adverse effect on the FW piping design.

Pipe Supports

The FW system piping outside containment was evaluated for the effects of EPU operating pressure and temperature increase on the piping design analyses. There is no fluid transient analysis in the current FW design basis for PBAPS. Because the existing analyses bound the EPU conditions, it was concluded that EPU does not have an adverse effect on FW pipe support loads and design.

Therefore, the FW system meets all CLTR dispositions.

Other Piping Evaluation

The Design Basis Accident LOCA (DBLOCA) hydrodynamic loads, including the pool swell loads, CO loads and chugging loads are not changed for PBAPS EPU. The piping systems and valves attached to the containment/torus WW are evaluated based on the DBLOCA hydrodynamic loads. For EPU conditions, the DBLOCA containment WW response loads were evaluated and found to be unchanged by EPU (see Section 2.6.1.2.1) and thus, there are no resulting effects on the WW attached piping and valves.

EPU short/long term suppression pool (SP) temperatures are evaluated in Section 2.6 and reported in Table 2.6-1. For PBAPS EPU, the maximum bulk SP temperatures are reduced with the RHR heat exchanger cross-tie modification. Therefore, the existing piping and pipe support analyses remain bounding for the following piping systems:

- RHR LPCI Lines
- Containment Spray Lines
- HPCI/Injection Lines (Beyond the Closed Valve)
- CS
- RCIC (Water Segment)

As previously noted, the nominal operating pressure and temperature of the reactor are not changed by EPU. Aside from MS and FW, no other system connected to the RCPB experiences an increased flow rate at EPU conditions. Only minor changes to fluid conditions are experienced by these systems due to higher steam flow from the reactor and slightly higher FW operating pressure and the subsequent change in fluid conditions throughout the BOP systems. Other external loading conditions, such as chugging, and CO also are not changed by EPU (see Section 2.6.1.2.1). Additionally, piping dynamic loads due to SRV discharge at EPU conditions are bounded by those used in the existing analyses.

The piping and pipe supports of the other BOP systems affected by EPU loading increases were reviewed to determine if there is sufficient capacity margin to accommodate the increased loadings. This review shows that existing piping design analyses are performed to pressures and temperatures which bound EPU conditions for some systems. For others, the design analyses have sufficient margin between the calculated and Code allowable stress limits to accommodate the small increases in pressure or temperature with EPU. The evaluations (see Tables 2.2-5b through 2.2-5f and 2.2-6) demonstrate that for all systems except MS and CARV discharge,

design margins for piping, supports and equipment nozzles are either unaffected by EPU or are adequate to accommodate the increased loads and movements resulting from EPU.

For BOP systems that do not require a detailed analysis, pipe routing and flexibility are considered to remain acceptable for EPU. These are non-safety-related BOP systems for which no piping or support analyses are documented. These are generally cold systems (<200°F) where thermal stresses and displacements are not significant. For these systems, pipe routing and flexibility are considered to remain acceptable, as the pipe routing is not being changed with EPU, and any increase in operating temperature range with EPU is not significant.

2.2.2.3 Reactor Vessel

The RPV structure and support components form a pressure boundary to contain reactor coolant and moderator, and form a boundary against leakage of radioactive materials into the DW. The RPV also provides structural support for the reactor core and internals.

PBAPS meets all CLTR dispositions. The topics addressed in this evaluation are:

Topic	CLTR Disposition	PBAPS Result
Reactor Vessel Structural Evaluation (Components Not Significantly Affected)	[[ ]]	Meets CLTR Disposition

As stated in Section 3.2.2 of the CLTR (Reference 1), for most RPV components, the flow, temperature, RIPDs and other mechanical loads do not increase. Consequently, there is no change in the stress or fatigue for these components.

[[

]]

The High and Low Pressure Seal Leak Detection Nozzles were not considered to be pressure boundary components at the time that the OLTP evaluation was performed, and have not been evaluated for EPU.

The effect of EPU was evaluated to ensure that the reactor vessel components continue to comply with the existing structural requirements of the ASME B&PV. For the OLTP components under consideration, the ASME B&PV, Section III, 1965 Code with addenda to and including Winter 1965 is applicable. These were used as the governing code and are considered the Code of Construction. However, if a component's design has been modified, the governing code for that component was the code used in the stress analysis of the modified component.

The following components [[
]] were modified since the original construction are:

- FW Nozzle: This component was modified and the governing Code for the modification is the ASME B&PV, Section III, 1974 Edition with Addenda to and including Summer 1976.
- Recirculation Inlet Nozzle: This component was modified and the governing Code for the modification is the ASME B&PV, Section III, 1989 Edition with Addenda to and including Winter 1990.
- Recirculation Outlet Nozzle Unit 3: This component was modified and the governing Code for the modification is the ASME B&PV, Section III, 1980 Edition with Addenda to and including Winter 1981.

New stresses are determined by scaling the original stresses based on the EPU conditions [[
]]. The analyses were performed for the design, the normal and upset, and the emergency and faulted conditions. If there is an increase in AP, jet reaction, pipe restraint or fuel lift loads, the changes are considered in the analysis of the components affected for normal, upset, emergency and faulted conditions.

Design Conditions

Because there are no changes in the design conditions due to EPU, the design stresses are unchanged and the Code requirements are met.

Normal and Upset Conditions

The reactor coolant temperature and flows (except: FW flow and MS flow) at EPU conditions are only slightly changed from those at current rated conditions. Evaluations were performed at conditions that bound the change in operating conditions. The evaluation type is mainly reconciliation of the stresses and usage factors to reflect EPU conditions. A primary plus secondary stress analysis was performed showing EPU stresses still meet the requirements of the ASME Code, Section III. Lastly, the fatigue usage was evaluated for the limiting location of components with a [[ ]] The PBAPS fatigue analysis results for the limiting components are provided in Table 2.2-7. The PBAPS analysis results for EPU show that components requiring evaluation do not exceed ASME code AVs and further analysis is not required, with exception to the FW Nozzle (Node D location).

The initial analysis using the methodology outlined above determined the FW Nozzle was acceptable for 50 years at EPU conditions. Therefore, a more refined analysis was performed

that determined the FW Nozzle is acceptable for 60 years. This analysis included the effects of reactor coolant environment on fatigue life. The CUF for the limiting location on the FW nozzle for a 60-year plant life is less than the Code AV of 1.0. The guidance provided in RIS 2008-30, Fatigue Analysis of Nuclear Power Plant - Components, for the analysis methodology was used to demonstrate compliance with the ASME Code Section III fatigue acceptance criteria. The calculated value of environmentally-assisted fatigue usage (U_{en}) for the limiting nozzle location for 60 year plant life is 0.677 based on projected number of cycles. See the "Additional Analysis" section below for further information on the environmental fatigue analysis.

Emergency and Faulted Conditions

The stresses due to Emergency and Faulted conditions are based on loads such as peak dome pressure, which are unchanged for EPU. Therefore, Code requirements are met for all RPV components under emergency and faulted conditions.

Therefore, reactor vessel meets all EPU dispositions.

Additional Analysis

License renewal for plant operation after 40 years requires that the effect of reactor water environment on the fatigue life of components be considered in evaluating the CUF. The plant-specific calculations have been performed and the values of usage factor are presented in Table 2.2-7 for the recirculation inlet and outlet nozzles, and for the FW nozzle as described above for the 60-year plant life. Projected numbers of design basis transients or cycles for 60 year operation were used in determining the fatigue usage. The basis for cycle projections includes actual transient counts from startup through June 7, 2009 and the linear projection capabilities of the fatigue monitoring program (FatiguePro software – see Table 1-1).

Conclusion

Exelon has reviewed the evaluations related to the structural integrity of pressure-retaining components and their supports. For the reasons set forth above, Exelon concludes that the effects of the proposed EPU on these components and their supports have been adequately addressed. Based on the above, Exelon further concludes that pressure-retaining components and their supports will continue to meet the requirements of 10 CFR 50.55a and the current licensing basis, following implementation of the proposed EPU. Therefore, Exelon finds the proposed EPU acceptable with respect to the structural integrity of the pressure-retaining components and their supports.

2.2.3 Reactor Pressure Vessel Internals and Core Supports

Regulatory Evaluation

RPV internals consist of structural and mechanical elements inside the reactor vessel, including core support structures. Exelon reviewed the effects of the proposed EPU on the design input parameters and the design-basis loads and load combinations for the reactor internals for normal operation, upset, emergency, and faulted conditions. These include pressure differences and thermal effects for normal operation, transient pressure loads associated with DBLOCAs, and

design transient occurrences. The review covered: (1) analyses of FIV for safety-related and non-safety related reactor internal components; and (2) analytical methodologies, assumptions, ASME Code editions, and computer programs used for these analyses. The review also compared the resulting stresses and CUFs against the corresponding Code-allowable limits. The regulatory acceptance criteria are based on: (1) 10 CFR 50.55a and GDC-1, insofar as they require SSCs important to safety be designed, fabricated, erected, constructed, tested, and inspected to quality standards commensurate with the importance of the safety functions to be performed; (2) GDC-2, insofar as it requires SSCs important to safety be designed to withstand the effects of earthquakes combined with the effects of normal or accident conditions; (3) GDC-4, insofar as it requires SSCs important to safety be designed to accommodate the effects of and to be compatible with the environmental conditions associated with normal operation, maintenance, testing, and postulated accidents; and (4) GDC-10, insofar as it requires the reactor core be designed with appropriate margin to assure that specified acceptable fuel design limits (SAFDLs) are not exceeded during any condition of normal operation, including the effects of AOOs.

Peach Bottom Current Licensing Basis:

The general design criteria listed in RS-001 are those currently specified in 10 CFR 50, Appendix A. The applicable PBAPS principal design criteria predate these criteria. The PBAPS principal design criteria are listed in UFSAR Section 1.5, "Principal Design Criteria." In 1967, the Atomic Energy Commission (AEC) published for public comment a revised set of proposed General Design Criteria (Federal Register 32 FR 10213 (Reference 9), July 11, 1967). Although not explicitly licensed to the AEC proposed General Design Criteria published in 1967, Philadelphia Electric Company (PECO), the predecessor to Exelon, performed a comparative evaluation of the design basis of PBAPS Units 2 and 3 against the AEC proposed General Design Criteria of 1967. The PBAPS UFSAR, Appendix H, "Conformance to AEC (NRC) Criteria," contains this comparative evaluation. UFSAR Appendix H provides a comparative evaluation with each of the groups of criteria set out in the July 1967 AEC release. As to each group of criteria, there is a statement of Exelon's understanding of the intent of the criteria in that group and a discussion of the plant design conformance with the intent of the group of criteria. Following a restatement of each of the proposed criteria is a list of references to locations in the PBAPS UFSAR where there is subject matter relating to the intent of that particular criteria.

For the current GDC listed in the Regulatory Evaluation above, the PBAPS comparative evaluation of the comparable 1967 AEC proposed General Design Criteria (referred to here as "Draft GDC") is contained in PBAPS UFSAR Appendix H: Draft GDC-1, Draft GDC-2, Draft GDC-5, Draft GDC-6, Draft GDC-40, and Draft GDC-42.

The RPV Internals and Core Supports are described in PBAPS UFSAR Sections 3.3, "Reactor Vessel Internals Mechanical Design," 4.2, "Reactor Vessel and Appurtenances Mechanical Design," and Appendix I, "In-service Inspection and Testing Programs."

In addition to the evaluations described in the PBAPS UFSAR, PBAPS's systems and components were evaluated for license renewal. Systems and system component materials of

construction, operating history, and programs used to manage aging effects were evaluated for plant license renewal and documented in the "Safety Evaluation Report Related to the License Renewal of Peach Bottom Atomic Power Station, Units 2 and 3," NUREG-1769, dated March 2003 (Reference 10). The reactor internals and core support structural components evaluation for license renewal are discussed in NUREG-1769, Sections 2.3.1, 3.0.3.9, 3.1, and 4.5.

Technical Evaluation

NEDC-33004P-A, Revision 4, "Constant Pressure Power Uprate," Class III, July 2003 (also referred to as CLTR) was approved by the NRC as an acceptable method for evaluating the effects of CPPUs. Sections 3.3 and 3.4 of the CLTR address the effect of CPPU on Reactor Vessel and Reactor Internals, respectively. The results of this evaluation are described below.

2.2.3.1 FIV Influence on Reactor Internal Components

The FIV evaluation of the RPV internals addresses the influence of an increase in flow during EPU. PBAPS meets all CLTR dispositions. The topics addressed in this evaluation are:

Topic	CLTR Disposition	PBAPS Result
Structural Evaluation of Core Flow Dependent RPV Internals	[[	Meets CLTR Disposition
Structural Evaluation of Other RPV Internals	]]	Meets CLTR Disposition

2.2.3.1.1 *Structural Evaluation of Core Flow Dependent RPV Internals*

As stated in Section 3.4.2 of the CLTR, EPU causes an increase in reactor coolant quality and an increase in FW and steam flow.

[[

]] The core flow dependent RPV internals (in-core guide tube and CRGT components) meet all dispositions provided in the CLTR [[

]]

2.2.3.1.2 *Structural Evaluation of Other RPV Internals*

As stated in Section 3.4.2 of the CLTR, EPU causes an increase in reactor coolant quality and an increase in FW and steam flow.

The required RPV internals vibration assessment of the other RPV internals is described in the CLTR. EPU operation increases the steam production in the core, resulting in an increase in the core pressure drop. [[

]] The increase in power may increase the level of reactor internals

vibration. Analyses were performed to evaluate the effects of FIV on the reactor internals at EPU conditions. This evaluation used a bounding reactor power of 4,030 MWt and 110% of rated core flow. [[

]] For components requiring an evaluation but not instrumented in Browns Ferry Unit 1, [[

]] The expected vibration levels for EPU were estimated by extrapolating the vibration data recorded in the prototype plant or similar plants and based on GEH BWR operating experience. These expected vibration levels were then compared with the established vibration acceptance limits. The following components were evaluated:

a) Shroud

b) Shroud Head and Separator Assembly

c) Jet Pumps

d) FW Sparger

e) Jet Pump Sensing Lines

f) In-Core Guide Tubes

g) CRGTs

h) Fuel Channels

i) Guide Rods

j) RPV Top Head Spare Instrument Nozzle

k) RPV Top Head Vent Nozzle

l) RPV Head Spray Nozzle

m) CS Piping and Sparger

The results of the vibration evaluation show that continuous operation at a reactor power of 4,030 MWt and 110% of rated core flow does not result in any detrimental effects on the safety-related reactor internal components. FIV of critical reactor internal components at EPU is predicted based on the available startup test data at [[

]] Vibration amplitudes are also adjusted by a [[

]]

The extrapolated vibration amplitude response under EPU conditions is compared with the acceptance criterion in the percent criteria for each mode. The percentages of the criteria for all modes are cumulative as total percent criteria. [[

]] The summary of the evaluation methods and results for the following components are:

Shroud

For the shroud, the measured vibrations were extrapolated to the EPU conditions. Maximum stresses during CLTP are less than 1,350 psi and will remain well within acceptance criteria during EPU. The calculated maximum stress at EPU is about 22.8% of the acceptance criteria or 2,281 psi at EPU conditions.

Shroud Head and Separator Assembly

For the shroud head, [[

]]

Jet Pumps

Results from strain gage measurements [[

]]

FW Sparger

The FW sparger in PBAPS is of the [[

]] Therefore, the PBAPS FW sparger is acceptable under FIV for EPU conditions.

Jet Pump Sensing Lines

Resonance of the recirculation pump vane passing frequency (VPF) with the natural frequency of the jet pump sensing line (JPSL) is the cause of the JPSL stress. [[

]]

In-Core Guide Tubes and Control Rod Guide Tubes

The FIVs of these components are not affected by EPU as they are a function of the core flow and the core flow does not change during EPU. Hence, there will be no increase in FIV stresses

due to EPU. Maximum stresses during OLTP are well within the acceptance criteria and will remain about the same at EPU conditions.

Fuel Channels

PBAPS uses the [[

]] Therefore, the PBAPS fuel assembly is acceptable under FIV for EPU conditions.

Guide Rods

The guide rod is subjected to cross flow vibration and the procedure for the lock-in phenomena using ASME Code Section III is used. [[

]]

Therefore, the PBAPS guide rod is acceptable under FIV for EPU conditions.

RPV Top Head Spare Instrument Nozzle

[[

]] Thus, the stress due to FIV at EPU conditions is deemed to be negligible.

RPV Top Head Vent Nozzle

[[

]] Therefore, the top head vent nozzle will be structurally adequate considering FIV at EPU conditions.

RPV Head Spray Nozzle

[[

]] Thus, the stress due to FIV at EPU conditions is deemed to be negligible.

Core Spray Piping and Sparger

[[

]] Therefore, the FIV stress due to vortex shedding at EPU conditions is minimal.

During EPU, the components in the core region and components such as the CS line are primarily affected by the core flow. Components in the annulus region such as the jet pump are primarily affected by the recirculation pump drive flow and core flow. For EPU conditions at PBAPS, there is no change in the maximum licensed core flow in comparison to the CLTP condition, resulting in negligible changes in FIV on the components in the annular and core regions.

The calculations for EPU conditions indicate that vibrations of all safety-related reactor internal components are within the GEH acceptance criteria. The analysis is conservative for the following reason:

- The GEH criterion of [[ ]] stress intensity is less than the ASME Section III Code criteria of 13,600 psi.
- The maximum vibration amplitude in each mode is used in the absolute sum process, whereas in reality the peak vibration amplitudes are unlikely to occur at the same time.

Based on the above, the FIV effect on reactor internal components meets all CLTR dispositions.

Steam Dryer

During EPU, the components in the upper zone of the reactor, such as the steam dryer, are mostly affected by the increased steam flow. As a result, the steam dryer can be significantly affected by EPU conditions.

The steam dryer is a non-safety-related component. Recent uprate experience indicates that FIV at EPU conditions could lead to high cycle fatigue failure of some dryer components. Quantitative analyses of the PBAPS steam dryers have been performed. The results showed that modifications to enhance structural integrity of the steam dryers would be needed for EPU conditions. Rather than modify the existing dryers, Exelon has made a decision to replace the steam dryers. EPU LAR Attachment 17 provides the analyses of the replacement steam dryers.

2.2.3.2 Reactor Internals

The RPV internals consist of the Core Support Structure components and Non-Core Support Structure components. PBAPS meets all CLTR dispositions. The topics addressed in this evaluation are:

Topic	CLTR Disposition	PBAPS Result
Reactor Internal Pressure Differences	[[	Meets CLTR Disposition
Reactor Internals Structural Evaluation		Meets CLTR Disposition
Steam Dryer Separator Performance	]]	Meets CLTR Disposition

2.2.3.2.1 *Reactor Internal Pressure Differences*

As stated in Section 3.3.1 of the CLTR, EPU results in higher pressure differences across internals due to higher core exit steam flow. The increase in core average power alone would result in higher core loads and reactor internals pressure differences (RIPDs) due to the higher core exit steam quality. The original acoustic and flow-induced loads, following a postulated recirculation line break, were also evaluated using the same methodology as before. The acoustic loads are determined by a multi-dimensional method of characteristics calculation performed specifically for the reactor vessel internals. This approach is widely used by the industry for predicting acoustic response. The flow-induced loads as a result of the recirculation line break are calculated using TRACG Model (see Table 1-1).

The RIPDs are calculated for Normal (steady-state operation), Upset, and Faulted conditions for all major reactor internal components. For minor components (jet pump sensing lines, dryer/separator guide rods, and in-core guide tube braces), the pressure drops during Normal, Upset, and Faulted conditions are minimal and represent insignificant portions of the RIPDs because of the small surface area. They are not affected by EPU and are not evaluated for EPU.

Tables 2.2-8 through 2.2-10 compare the RIPDs across the major reactor internal components during current and EPU operation in the Normal, Upset, and Faulted conditions, respectively.

The PBAPS EPU core will include GNF2 fuel. The RIPDs are calculated for both GE14 and GNF2 fuel; the results for the GE14 fuel are demonstrated to be equal to or greater than the GNF2 fuel. This is due to the higher flow resistance and resultant higher pressure drop of the GE14 fuel bundle.

2.2.3.2.2 *Reactor Internals Structural Evaluation (Non-FIV)*

As stated in Section 3.3.2 of the CLTR, the typical loads considered in EPU structural evaluation of the internals include: dead weight, RIPDs, seismic loads, thermal load effects, flow loads, and acoustic and flow-induced loads due to recirculation line break, consistent with the design basis. [[

]]

The RPV internals consist of the Core Support Structure components and non-Core Support Structure components. The RPV Internals are not ASME Code components, however, the requirements of the ASME Code are used as guidelines in their design/analysis. The

evaluations/stress reconciliation in support of the EPU was performed consistent with the design basis analysis of the components. The reactor internal components evaluated are:

Core Support Components

- Shroud
- Shroud Support
- Core Plate
- Top Guide
- Control Rod Drive Housing (CRDH)
- CRGT
- Orificed Fuel Support (OFS)
- Fuel Channel

Non-Core Support Components

- FW Sparger
- Jet Pump Assembly
- CS Line and Sparger
- Access Hole Cover (AHC)
- Shroud Head and Steam Separator Assembly
- In-Core Housing and Guide Tube
- Core Differential Pressure & Liquid Control Line
- Jet Pump Instrument Penetration Seal

The original configurations of the internal components are considered in the EPU evaluation unless a component has undergone permanent structural modifications, in which case, the modified configuration is used as the basis for the evaluation.

The effects of the thermal-hydraulic changes due to EPU on the reactor internals were evaluated. All applicable Normal (Service Level A), Upset (Service Level B), Emergency (Service Level C), and Faulted condition (Service Level D) loads were considered consistent with the existing design basis analysis. These loads include the RIPDs, dead weight, seismic loads, and acoustic and flow induced loads, SCRAM and thermal loads.

EPU loads are compared to those used in the existing design basis analysis. If the EPU loads are bounded by the design basis loads for the RPV internals, the existing design basis qualification is valid for EPU. In such cases, no further evaluations are required or performed. For RPV internals exhibiting increases in loads, the method of analysis is to linearly scale the critical/governing stresses based on increase in loads as applicable, and compare the resulting

stresses against the allowable stress limits, consistent with the design basis. Conservative assessment is the initial approach, however, if required, excessive conservatism is removed from the existing assessment and/or the design basis analysis, as appropriate, and if justifiable.

Tables 2.2-11 and 2.2-12 present the governing stresses and fatigue values for the various reactor internal components as affected by EPU. All stresses and fatigue usage factors are within the design basis ASME Code allowable limits, and the RPV internal components are demonstrated to be structurally qualified for operation in the EPU conditions.

The following reactor vessel internals are evaluated for the effects of changes in loads due to EPU.

a) **Shroud:** A quantitative evaluation of the shroud was performed for the changes in loads associated with EPU conditions. RIPDs, Deadweight, Seismic, and Acoustic and Flow Induced load are applicable loads for the shroud. Deadweight and Seismic loads remain unchanged for EPU with respect to the current design basis loads. RIPD loads increased for Normal, Upset and Faulted conditions by ~7% (shroud head only) with respect to CLTP conditions. Acoustic loads increased significantly for EPU with respect to CLTP conditions. The structural integrity evaluation of the shroud was performed with respect to the existing design basis. Based on this evaluation, it was concluded that the Normal (Service Level A), Upset (Service Level B), Emergency (Service Level C), and Faulted condition (Service Level D) condition stresses in the shroud remain within the design basis ASME Code allowable stress limits. Therefore, the shroud, in its original condition, remains qualified for operation in the EPU conditions.

b) **Shroud Support:** A quantitative evaluation of the shroud Support was performed for the changes in loads associated with EPU conditions. RIPDs, Deadweight, Seismic, and Acoustic loads are applicable loads for the shroud support. Deadweight, and Seismic loads remain unchanged for EPU with respect to the current design basis loads. RIPDs remain bounded for Normal, and Upset conditions and unchanged for Faulted condition with respect to CLTP conditions. Acoustic loads significantly increased with respect to CLTP conditions. The structural integrity evaluation of the shroud support was performed with respect to the existing design basis evaluation. It was concluded that the Normal (Service Level A), Upset (Service Level B), Emergency (Service Level C), and Faulted condition (Service Level D) condition stresses in the shroud support remain within the design basis ASME Code allowable stress limits. Hence, the shroud support, in its original condition, remains qualified for operation in the EPU conditions.

c) **Core Plate:** A quantitative evaluation of the core plate was performed for the changes in loads associated with EPU conditions. RIPDs, Deadweight, and Seismic loads are applicable loads to the core plate. Deadweight and Seismic loads remain unchanged for EPU with respect to the current design basis loads. RIPDs increased for Normal, Faulted conditions by <2% and remained bounded for the Upset condition with respect to the CLTP conditions. The structural integrity evaluation of the core plate was performed with respect to the current design basis evaluations. Based on this evaluation, it was

concluded that the Normal (Service Level A), Upset (Service Level B), Emergency (Service Level C), and Faulted condition (Service Level D) condition stresses in the core plate remain within the design basis ASME Code allowable stress limits. Hence, the core plate, in its original configuration, remains qualified for operation in the EPU conditions.

The core plate plug (extended life core support plugs installed in 2001) for PBAPS Unit 3 was qualitatively evaluated and found to be qualified for EPU operation. The core plate plug life for PBAPS Unit 2 was evaluated and found that core plate plug life decreases due to EPU load from 25.7 EFPY to 25 EFPY. However, extended life core support plugs will be installed in PBAPS Unit 2 before EPU operation.

d) **Top Guide:** A qualitative evaluation of the top guide was performed for the changes in loads associated with EPU conditions. RIPDs, Deadweight, and Seismic loads are applicable to the top guide. Deadweight and Seismic loads remain unchanged for EPU with respect to the current design basis loads. RIPDs for Normal, Upset and Faulted conditions remained bounded with respect to CLTP conditions. The structural integrity evaluation of the top guide was performed with respect to the current design basis evaluation. Based on this evaluation, it was concluded that the Normal (Service Level A), Upset (Service Level B), Emergency (Service Level C), and Faulted condition (Service Level D) condition stresses in the top guide remain within the design basis ASME Code allowable stress limits. Hence, the top guide, in its original condition, remains qualified for operation in the EPU conditions.

e) **Control Rod Drive Housing:** A qualitative evaluation of the CRDH was performed for the changes in loads associated with EPU conditions. Reactor Pressure, Deadweight, Seismic, and flow impingement loads are applicable to the CRDH. RIPD loads are insignificant for the CRDH inside the RPV (pressure difference between the inside and outside the CRDH is small). The CRDH is subjected to the reactor pressure. Deadweight and Seismic loads remain unchanged for EPU with respect to the current design basis loads. Flow impingement loads corresponding to ICF conditions were considered. The structural integrity evaluation of the CRDH was performed with respect to the current design basis evaluation. Based on this evaluation, it was concluded that the Normal (Service Level A), Upset (Service Level B), Emergency (Service Level C), and Faulted condition (Service Level D) condition stresses in the CRDH remain within the design basis ASME Code allowable stress limits. Based on the evaluation described above, the CRD Housing, in its original condition, remains qualified for operation in the EPU conditions.

f) **Control Rod Guide Tube:** A qualitative evaluation of the CRGT was performed for the changes in loads associated with EPU conditions. RIPDs, Deadweight, Seismic and flow impingement loads are applicable to the CRGT. Flow impingement loads corresponding to ICF conditions were considered. Deadweight and Seismic loads remain unchanged for EPU with respect to the current design basis loads. RIPDs increased for Normal and Faulted conditions by <2% and remained bounded for the Upset condition with respect to

CLTP conditions. The structural integrity evaluation of the CRGT was performed consistent with the existing design basis evaluation. Based on this evaluation, it was concluded that the Normal (Service Level A), Upset (Service Level B), Emergency (Service Level C), and Faulted condition (Service Level D) condition stresses in the CRGT remain within the design basis ASME Code allowable stress limits, and the original design basis buckling criteria for Normal/Upset, Emergency, and Faulted conditions are also satisfied. Hence, the CRGT in its original condition remains qualified for operation in the EPU conditions.

g) **Orificed Fuel Support:** A quantitative evaluation of the OFS was performed for the changes in loads associated with EPU conditions. Deadweight (including the dead weight of the fuel bundles), Seismic and RIPD loads are applicable to the OFS. Seismic loads remain unchanged for EPU with respect to the current design basis loads. Deadweight increased by < 2% for GNF2 fuel with respect to GE14. The RIPDs increased for the Normal and Faulted conditions by < 2% and remained bounded for the Upset condition with respect to CLTP condition. The structural integrity evaluation of the OFS was performed consistent with the existing design basis evaluation. Based on this evaluation, it was concluded that the Normal (Service Level A), Upset (Service Level B), Emergency (Service Level C), and Faulted condition (Service Level D) condition stresses in the OFS remain within the design basis ASME Code allowable stress limits. Therefore, the OFS remains qualified for operation in the EPU conditions.

h) **Fuel Channel:** The Normal/Upset/Faulted RIPDs for the fuel channel are within the design limits. The fuel channel is qualified by GNF Proprietary methodology for operation in EPU conditions.

i) **Feedwater Sparger:** A qualitative evaluation of the FW sparger was performed for the changes in loads associated with EPU conditions. Deadweight, seismic, Hydraulic, and thermal loads are applicable to the FW sparger. The hydraulic loads are small compared to other primary loads. Deadweight and Seismic loads remain unchanged in the EPU condition with respect to the current design basis loads. The primary stresses in the FW sparger are small compared to the thermal stresses. Thermal stresses in the FW sparger are high and of cyclical nature due to the system thermal transients (e.g., turbine roll). Hence, fatigue is the most limiting parameter for the FW sparger. The fatigue evaluation of the FW sparger for EPU was based on a generic report and reconciled for PBAPS-specific thermal transients. The fatigue evaluation of the FW sparger considered the maximum FW temperature reduction of 90°F, and the RPV/Shroud annulus temperature reduction of 10.7° F. The fatigue usage life was evaluated at three critical locations of the FW spargers; namely, the header pipe/adaptor weld, reducer to thermal sleeve weld, and the sparger pipe to the end bracket weld. The fatigue evaluation was conservatively performed by lumping transient cycles with the most severe transients such as the turbine roll and hot standby. Considering the conservatism inherent in the evaluation and a high margin in fatigue exists, it is concluded fatigue remains within the allowable value of 1 as

shown in Table 2.2-12. The structural integrity evaluation of the FW sparger was performed consistent with the existing design basis evaluation. Based on this evaluation, it was concluded that the Normal (Service Level A), Upset (Service Level B), Emergency (Service Level C), and Faulted condition (Service Level D) condition stresses and fatigue usage in the FW sparger remain within the design basis ASME Code allowable limits. Hence, the FW sparger, in its original configuration, remains qualified for operation in EPU conditions.

j) **Jet Pump Assembly:** A quantitative evaluation of the jet pump assembly was performed for the changes in loads associated with EPU conditions. RIPDs, Reactor pressure loads, Dead weight, Seismic loads, Hydraulic loads, thermal load, and Acoustic loads are applicable to the jet pump assembly components. Deadweight and Seismic loads remain unchanged for EPU with respect to the current design basis loads. The RIPDs across the shroud support plate remain bounded in the EPU for the Normal, Upset and Faulted conditions with respect to CLTP condition. Acoustic loads remain bounded for EPU with respect to CLTP condition. The largest temperature reduction in the shroud/RPV annulus was found to be ~ 10.7° F for EPU with 90°F FW temperature reduction conditions. The 10.7°F annulus temperature reduction for EPU with respect to the CLTP condition is < 2.5%. The effect on the fatigue due to this temperature reduction is insignificant and given that a high margin exists in fatigue usage factor. Because all applicable loads remain essentially unchanged, the existing design basis evaluation remains valid for EPU evaluation. The cumulative fatigue usage values for the riser brace were calculated for 40 and 60 years life, and were shown to be less than 1. Hence, the Jet Pump assembly remains qualified for EPU operation.

k) **Core Spray Line and Sparger:** A qualitative evaluation of the CS line and sparger was performed for the changes in loads associated with EPU conditions. Deadweight, Seismic, Hydraulic, and thermal effects are applicable to the CS line and sparger. Deadweight and Seismic loads remain unchanged in the EPU condition with respect to the current design basis loads. The system flow (Hydraulic loads) and temperature for EPU conditions remain unaffected with respect to CLTP. The largest temperature reduction in the shroud/RPV annulus was found to be ~ 10.7°F for EPU with 90°F FW temperature reduction conditions. The 10.7°F annulus temperature reduction for EPU with respect to the CLTP condition is < 2.5%. The effect on the fatigue due to this temperature reduction is insignificant and given that a high margin exists in fatigue usage factor. Hence, the CS line and sparger in its original configuration, remains qualified for operation in the EPU conditions.

l) **Access Hole Cover:** A qualitative evaluation of the AHC was performed for the changes in loads associated with EPU conditions. RIPDs, Deadweight, Seismic, and Acoustic loads are applicable to the AHCs. RIPDs across the shroud support plate are applicable to the AHC. RIPDs remain bounded for the EPU in the Normal, Upset and Faulted conditions with respect to CLTP. Acoustic loads for the AHCs increased for the EPU conditions with

respect to design basis. Deadweight and Seismic loads remain unchanged in the EPU condition with respect to the current design basis loads. The structural integrity evaluation of the AHC was performed consistent with the existing design basis evaluation. One nonfunctional bolt for PBAPS Unit 3 was also considered in the evaluation. Based on this evaluation, it was concluded that the Normal (Service Level A), Upset (Service Level B), Emergency (Service Level C), and Faulted condition (Service Level D) condition stresses in the AHC remain within the design basis ASME Code allowable stress limits. Hence, both AHC designs are qualified for operation in the EPU conditions.

m) **Shroud Head and Separator Assembly:** A quantitative evaluation of the shroud head bolts (SHBs) was performed for the changes in loads associated with EPU conditions. RIPDs, Dead weight, Seismic loads and thermal effects are applicable loads to the SHBs. Deadweight and Seismic loads remain unchanged for EPU with respect to the current design basis loads. RIPD for normal, upset, and faulted conditions increased by ~7% with respect to design basis. The largest temperature reduction in the shroud/RPV annulus was found to be ~10.7° F for EPU with 90°F FW temperature reduction conditions. The 10.7°F annulus temperature reduction for EPU with respect to the CLTP condition is < 2.5%. This reduction in the shroud/RPV annulus temperature slightly reduces the thermal preload. PBAPS Units 2 and 3 (each) currently have 31 SHBs installed. However, PBAPS Units 2 and 3 (each) can accommodate up to 48 uniformly spaced SHBs. The minimum required number of SHBs for EPU is 32 (to prevent the shroud head separation or lift off). The structural integrity evaluation of the SHBs (most limiting component of the shroud head and steam separator assembly) was performed with respect to the existing design basis evaluation. This evaluation was performed for minimum number bolts requirement consistent with the previous evaluation provided the following two SHB spacing requirements are met: i) There shall be no more than two adjacent non-functional/removed SHBs and ii) There shall be at least two adjacent functional SHBs between two groups of two non-functional/removed SHBs. Normal operation condition was found to be the limiting, as it requires highest number of bolts (32 bolts to prevent lift off). Hence, the Shroud Head and Separators Assembly (with 32-functioning SHBs meeting the spacing requirements stipulated above) remain qualified for operation in the EPU conditions.

n) **In-Core Housing and Guide Tube**: A qualitative evaluation of the in-core housing and guide tube was performed for the changes in loads associated with EPU conditions. Deadweight, Seismic, reactor pressure, and flow impingement loads are applicable for this component. Deadweight, flow impingement and Seismic loads remain unchanged in the EPU condition with respect to the current design basis loads. The structural integrity evaluation of the in-core housing and guide tube was performed with respect to the existing design basis evaluation. Based on the evaluation it is concluded that the Normal (Service Level A), Upset (Service Level B), Emergency (Service Level C), and Faulted condition (Service Level D) condition stresses remain within the ASME Code allowable stress limits for EPU. Hence, the in-core housing and guide tube in its original configuration remains qualified for operation in the EPU conditions.

o) **Core Differential Pressure Line:** A qualitative evaluation of the core differential pressure line was performed for the changes in loads associated with EPU conditions. Deadweight, Seismic, operating pressure and flow impingement loads are applicable for this component. Deadweight and Seismic loads remain unchanged in the EPU condition with respect to the current design basis loads. The flow impingement loads are bounded by those of the CLTP condition. The structural integrity evaluation of the core differential pressure line was performed with respect to the existing design basis evaluation. Based on this evaluation, it was concluded that the Normal (Service Level A), Upset (Service Level B), Emergency (Service Level C), and Faulted condition (Service Level D) condition stresses remain bounded by the design basis evaluation. Hence, the core differential pressure line remains qualified for operation in the EPU conditions.

p) **Jet Pump Instrument Penetration Seal:** A qualitative evaluation of the jet pump instrument penetration seal was performed for the changes in loads associated with EPU conditions. Deadweight, Seismic, and operating pressure are applicable for this component. Deadweight and Seismic loads remain unchanged in the EPU condition with respect to the current design basis loads. The structural integrity evaluation of the jet pump instrument penetration seal was performed with respect to the existing design basis evaluation. Based on this evaluation, it was concluded that the Normal (Service Level A), Upset (Service Level B), Emergency (Service Level C), and Faulted condition (Service Level D) condition stresses remain bounded by the design basis evaluation. Hence, the jet pump instrument penetration seal remains qualified for operation in the EPU conditions.

2.2.3.2.3 *Steam Dryer/Separator Performance*

For PBAPS, the EPU performance of the steam dryer/separator was evaluated to ensure that the quality of the steam leaving the RPV continues to meet existing operational criteria at EPU conditions. EPU results in an increase in saturated steam generated in the reactor core. For constant core flow, this results in an increase in the separator inlet quality, an increase in the steam dryer face velocity and a decrease in the water level inside the dryer skirt. These factors, in addition to the radial power distribution, affect the steam dryer/separator performance.

The results of the evaluation demonstrated that PBAPS, with an equilibrium GNF2 EPU core, has acceptable moisture performance (moisture content ≤ 0.1 weight %) at EPU conditions.

Conclusion

Exelon has reviewed the structural integrity of reactor internals and core supports and concludes the effects of the proposed EPU on the reactor internals and core supports have been adequately addressed. Exelon further concludes the reactor internals and core supports will continue to meet the requirements of 10 CFR 50.55a and the current licensing basis, following implementation of the proposed EPU. Therefore, Exelon finds the proposed EPU acceptable with respect to the design of the reactor internal and core supports.

2.2.4 Safety-Related Valves and Pumps

Regulatory Evaluation

Exelon's review included certain safety-related pumps and valves typically designated as Class 1, 2, or 3 under Section III of the ASME B&PV Code and within the scope of Section XI of the ASME B&PV Code and the ASME Operations and Maintenance (O&M) Code, as applicable. The review focused on the effects of the proposed EPU on the required functional performance of the valves and pumps. The review also covered any impacts that the proposed EPU may have on the Exelon motor operated valve (MOV) programs related to GL 89-10, GL 96-05, and GL 95-07. Exelon also evaluated the lessons learned from the MOV program and the application of those lessons learned to other safety-related power-operated valves. The regulatory acceptance criteria are based on: (1) GDC-1, insofar as it requires that SSCs important to safety be designed, fabricated, erected, and tested to quality standards commensurate with the importance of the safety functions to be performed; (2) GDC-37, GDC-40, GDC-43, and GDC-46, insofar as they require the ECCS, the containment heat removal system, the containment atmospheric cleanup systems, and the cooling water system, respectively, be designed to permit appropriate periodic testing to ensure the leak-tight integrity and performance of their active components; (3) GDC-54, insofar as it requires piping systems penetrating containment be designed with the capability to periodically test the operability of the isolation valves to determine if valve leakage is within acceptable limits; and (4) 10 CFR 50.55a(f), insofar as it requires pumps and valves subject to that section must meet the IST program requirements identified in that section.

Peach Bottom Current Licensing Basis

The general design criteria listed in RS-001 are those currently specified in 10 CFR 50, Appendix A. The applicable PBAPS principal design criteria predate these criteria. The PBAPS principal design criteria are listed in UFSAR Section 1.5, "Principal Design Criteria." In 1967, the Atomic Energy Commission (AEC) published for public comment a revised set of proposed General Design Criteria (Federal Register 32 FR 10213 (Reference 9), July 11, 1967). Although not explicitly licensed to the AEC proposed General Design Criteria published in 1967, Philadelphia Electric Company (PECO), the predecessor to Exelon, performed a comparative evaluation of the design basis of PBAPS Units 2 and 3 against the AEC proposed General Design Criteria of 1967. The PBAPS UFSAR, Appendix H, "Conformance to AEC (NRC) Criteria," contains this comparative evaluation. UFSAR Appendix H provides a comparative evaluation with each of the groups of criteria set out in the July 1967 AEC release. As to each group of criteria, there is a statement of Exelon's understanding of the intent of the criteria in that group and a discussion of the plant design conformance with the intent of the group of criteria. Following a restatement of each of the proposed criteria is a list of references to locations in the PBAPS UFSAR where there is subject matter relating to the intent of that particular criteria.

For the current GDC listed in the Regulatory Evaluation above, with the exception of current GDC-46, the PBAPS comparative evaluation of the comparable 1967 AEC proposed General Design Criteria (referred to here as "Draft GDC") is contained in PBAPS UFSAR Appendix H:

Draft GDC-1, Draft GDC-5, Draft GDC-38, Draft GDC-46, Draft GDC-47, Draft GDC-48, Draft GDC-51, Draft GDC-53, Draft GDC-56, Draft GDC-57, Draft GDC-59, Draft GDC-60, Draft GDC-61, Draft GDC-63, Draft GDC-64, and Draft GDC-65. There is no Draft GDC directly associated with current GDC-46.

The IST of safety-related valves and pumps is described in PBAPS UFSAR Appendix I, "In-service Inspection and Testing Programs," and TS Section 5.5.6, "In-service Testing Programs."

In addition to the evaluations described in the PBAPS UFSAR, PBAPS's safety-related valves and pumps were evaluated for license renewal. Systems and system component materials of construction, operating history, and programs used to manage aging effects were evaluated for plant license renewal and documented in the "Safety Evaluation Report Related to the License Renewal of Peach Bottom Atomic Power Station, Units 2 and 3," NUREG-1769, dated March 2003 (Reference 10). The safety-related valves and pumps are addressed within NUREG-1769 under the systems that contain them.

Technical Evaluation

2.2.4.1 Background

In-service Testing of Safety-Related Pumps and Valves

IST of Safety-Related Pumps and Valves is addressed and documented in the PBAPS In-service Testing Program ER-PB-321-1000, Rev. 1; Pump and Valve In-service Testing Program Fourth Ten Year Interval. The PBAPS Pump and Valve In-service Testing Program, hereafter referred to as the IST Program, meets the requirements of 10 CFR 50.55a(f).

The PBAPS Improved TSs Section 5.5.6, In-service Testing Program, states that this program provides controls for IST of ASME Class 1, 2 and 3 pumps and valves and that the program shall include testing frequencies as specified in ASME OM Code.

The PB IST program was prepared in accordance with the requirements of subsections of the ASME Code for Operation and Maintenance of Nuclear Power Plants, 2001 Edition through 2003 Addenda as follows: (1) ASME OM Code, Subsection ISTA, General Requirements, (2) ASME OM Code, Subsection ISTB, In-service Testing of Pumps in Light-Water Reactor Nuclear Power Plants, (3) ASME OM Code, Subsection ISTC, In-service Testing of Valves in Light-Water Reactor Nuclear Power Plants, (4) ASME OM Code, Mandatory Appendix I, In-service Testing of Pressure Relief Devices in Light-Water Reactor Nuclear Power Plants, (5) ASME OM Code, Mandatory Appendix II, Check Valve Condition Monitoring Program.

Containment Leakage Rate Testing Program

Containment Leakage Rate Testing is addressed in UFSAR Section 5.2.5, and PBAPS TS Section 5.5.12. The PBAPS Containment Leakage Rate Testing Program implements testing requirements in accordance with 10 CFR 50 Appendix J, Option B, as modified by approved exemptions, and guidelines contained in RG 1.163, Performance-Based Containment Leak Test Program (dated September 1995). Tests that measure containment isolation valve leak rates (Type C tests) are performed using the TS Basis value for primary containment leakage rate

testing program, P_a, of 49.1 psig. From the containment analysis at EPU conditions, the peak containment pressure is 48.7 psig for a LOCA (Section 2.6.1). Because the containment peak pressure for EPU is lower than the TS Basis value for P_a, the current test criterion bounds the peak LOCA containment pressure for the proposed EPU. Thus, the leak rate testing requirements for containment isolation valves are not impacted by the proposed EPU.

Pumps in the IST Program

The scope of the IST Program is derived from the ASME OM Code, Subsection ISTB, In-service Testing of Pumps in Light-Water Reactor Nuclear Power Plants. Table 2.2-13 lists the systems with pumps in the IST Program.

Valves in the IST Program

The scope of the IST Program is derived from the ASME OM Code, Subsection ISTC, In-service Testing of Valves in Light-Water Reactor Nuclear Power Plants. Table 2.2-13 lists the systems with valves in the IST Program.

Motor Operated Valve Program

The PBAPS MOV Program implements the recommendations and requirements of GL 89-10, "Safety-Related Motor Operated Valve Testing and Surveillance" (Reference 43). The scope of the program also includes the requirements of GL 96-05, "Verification of Design-Basis Capability of Safety-Related Motor Operated Valves" (Reference 44). Table 2.2-13 indicates the systems that contain GL 89-10 MOVs.

Air-Operated Valve Program

The PBAPS Air Operated Valve (AOV) program addresses aspects of AOV design, performance monitoring and maintenance that are necessary to provide reasonable assurance that design bases functions will be accomplished. Table 2.2-13 lists the systems which contain AOV Program valves.

Generic Letter 95-07

GL 95-07, "Pressure Locking and Thermal Binding of Safety-Related Power-Operated Gate Valves," August 17, 1995 (Reference 45) addresses the phenomena of pressure locking and thermal binding of safety-related power-operated gate valves. Pressure locking and thermal binding had been previously evaluated for all PBAPS safety-related gate valves, and twelve valves were modified to eliminate the problem. A review of the station commitments and modifications related to GL 95-07 indicates that EPU will not cause additional safety-related gate valves, formerly excluded by screening criteria, to be susceptible to pressure locking or thermal binding, and EPU will not affect the susceptibility of valves already modified to prevent these problems. Therefore, EPU has no effect on the potential for pressure locking or thermal binding of safety-related power-operated gate valves.

Lessons Learned

The PBAPS IST, Containment Leak Rate, MOV and AOV programs utilize the PBAPS Corrective Action Program to evaluate and resolve non-conforming conditions identified during program performance. The purpose of the PBAPS Corrective Action Program is to stimulate and manage continuous improvement of station and organizational performance through identification, evaluation, correction and prevention of reoccurrence of unwanted and/or unexpected conditions, deviations, events, or issues that have the potential for affecting the safe, reliable, and efficient operation of PBAPS. Included in the program is recognition of any lessons learned or improvement opportunities identified from an assessment of missed opportunities to avoid the event/condition/issue. LS-AA-125 is the administrative procedure that implements the requirements of the corrective action process from 10 CFR 50 Appendix B.

2.2.4.2 Description of Analyses and Evaluations

This section addresses the effect of EPU on the performance requirements of PBAPS safety-related pumps and valves in the IST, MOV, and AOV programs. The discussion is organized by system or groups of systems and the respective Program pumps and valves are discussed therein. Each system was analyzed to define any parameter changes such as pressure, flow and process and ambient temperatures resulting from implementation of EPU. MOV program valves that required further evaluation for EPU effect are discussed below and in Table 2.2-14.

For the majority of the valves, the minor effect to normal operating and DBA ambient temperatures due to EPU does not require a change to the temperature assumptions used in the MOV voltage drop calculations; therefore, there is no effect on these calculations. For two valves, the post LOCA temperature increased sufficiently to require evaluation. For these valves, it was determined that there was no impact to the valve operation.

The valves evaluated for change in differential pressure were affected by the post-LOCA DW and WW pressure changes. Of these valves, eight have a negative margin impact and are required to be modified prior to implementation of EPU. An additional five valves were identified to have changed to low margin. These valves will also require modification to return them to acceptable margin.

The remaining valves were found to be acceptable with the change in differential pressure.

The calculations of design basis parameters for MOVs within the scope of GL 89-10 and GL 96-05 were reviewed to determine the effect of EPU on the valves. In most cases, the values of existing parameters bound the values expected under EPU conditions. In a few cases, there are slight increases above the current value. In those cases, the effect of the slight increase on the MOV has been evaluated in accordance with the requirements of the station MOV program. Any changes necessary will be completed prior to EPU implementation.

EPU will also result in several modifications, for example, the RHR heat exchanger cross-tie modification, which has the potential to affect MOVs within the scope of GL 89-10 and GL 96-05. The PBAPS design change process will ensure that the effect of these modifications

on both existing MOVs and on any new MOVs installed in connection with the modifications is addressed during the detailed design phase.

Systems Not Significantly Affected by EPU:

The following systems are not significantly affected by EPU; MS Sampling, Reactor Water Sampling, Primary Containment Leak Rate Test, RHR Sampling, Torus Water Sampling, Instrument Nitrogen System, Backup Instrument Nitrogen to Automatic Depressurization System (ADS), Backup Seismic Instrument Nitrogen, Safety Grade Instrument Gas, Post Accident Sampling, Breathing Air, Instrument Air, Service Air, and Reactor Building Ventilation. These systems are addressed in Section 2.5.7; except for Reactor Building Ventilation which is addressed in Section 2.7.6. With no changes or effects to these systems due to EPU, the PBAPS program valves in these systems are not impacted by EPU.

Nuclear Steam Supply Systems:

The NSSS systems include the Core Spray (Section 2.8.5.6.2), High Pressure Coolant Injection (Section 2.8.5.6.2), Reactor Core Isolation Cooling (Section 2.8.4.3), Residual Heat Removal (Section 2.8.4.4), Reactor Water Cleanup (Section 2.1.7) and Standby Liquid Control (Section 2.8.4.5). Evaluations show that the EPU has no effect on system operating pressures, flow rates, and pump head performance for CS, RCIC, and HPCI systems. No modifications are being made to the CS, RCIC, and HPCI systems. Based on these evaluations, EPU has no effect on the performance characteristics and IST Plan requirements for safety-related pumps and valves in the CS, RCIC and HPCI systems.

Changes in containment response affect certain program valves of the NSSS systems. The affected valves are evaluated in Section 2.2.4.3.

The remaining NSSS systems are evaluated below.

Reactor Water Cleanup System

The RWCU system changes due to EPU are addressed in Section 2.1.7. The ability of the program valves to perform their safety functions is not impacted by EPU.

Standby Liquid Control System

The SLCS changes due to EPU are addressed in Section 2.8.4.5. For EPU, the maximum pump discharge pressure occurring during the limiting ATWS event is calculated at 1265 psig. The surveillance procedure for the pumps will be required to be changed to provide a minimum discharge pressure of 1265 psig from the pumps, and provide a minimum flow of 49.1 gpm. The program valves in the system were found to be acceptable for EPU.

Residual Heat Removal System

The RHR system changes due to EPU are addressed in Section 2.8.4.4.

Additionally, the RHR System will be modified to support the elimination of CAP credit. The modification will ensure adequate RHR and CS pump NPSH for the DBLOCA event at EPU conditions. This modification is described in EPU LAR Enclosure 9c.

The RHR system modification will affect valves currently in the IST program as well as adding valves to the IST program. The IST requirements for the current valves and the added valves will be assessed and finalized during the design configuration control process at PBAPS and will be implemented prior to EPU.

Balance of Plant Systems:

Changes in containment response affect certain valves of the BOP systems. The affected valves are evaluated in Section 2.2.4.3.

Reactor Building Closed Cooling Water System

The RBCCW system changes due to EPU are addressed in Section 2.5.3.3.1. No modifications are being made as a result of EPU. The PBAPS program valves are not impacted by EPU.

Feedwater / Feedwater Pump Recirculation Systems

The FW system changes due to EPU are addressed in Section 2.5.4.4. The temperature, flow, and operating pressure will increase; however, the current design conditions bound the conditions at EPU. The PBAPS Program MOVs affected by EPU are evaluated in Section 2.2.4.3. The ability of the IST program check valves to perform their safety functions is not impacted by EPU.

Standby Gas Treatment System

The SGTS is addressed in Section 2.5.2.1. As the system flowrate is unchanged and operating temperatures remain below limits for both normal and accident conditions, EPU has no impact on SGTS operation, component design, or instrumentation. There are no changes to the IST program pumps or program valves for this system.

Post-LOCA Combustible Gas Control System

The Post-LOCA Combustible Gas Control system is addressed in Section 2.6.4. The Combustible Gas Control System is no longer required to support a DBA at PBAPS.

The only function required of this system is containment isolation. The peak post-accident DW pressure expected for EPU is 48.7 psig. This containment peak pressure is lower than the TS Basis value for Pa of 49.1 psig for leak rate test. Therefore, the current test criterion bounds the peak LOCA containment pressure for the proposed EPU and the leak rate testing requirements for containment isolation valves are not impacted.

Main Steam System

The proposed EPU results in MS flow increase; however, the current design bounds the conditions at EPU. MS header pressure will remain the same or slightly lower due to increased friction losses at higher EPU flow rates.

The MS SRVs are addressed in Section 2.8.4.2. The SRV setpoints remain the same.

An additional SSV is required to provide margin for ATWS events. The additional SSV will have an ASME certified capacity of at least 925,700 lb/hr at a reference pressure of 1230 psig. The effect on the IST will be determined as part of the design configuration control process at PBAPS. The additional SSV modification is described in EPU LAR Attachment 9a.

The MS Isolation Valves remain capable of performing their safety functions and therefore are adequate for EPU.

Reactor Recirculation System

The RRS is addressed in Section 2.8.4.6. With no change in system requirements due to EPU, there is no change to IST program valves.

Control Rod Drive Hydraulic System

The CRD Hydraulic system changes due to EPU are addressed in Section 2.8.4.1. Although there is a slight pressure increase for operation at EPU, it is within the design capability of the affected components and no temperature changes occur for EPU; therefore, there is no impact to the IST Program.

Station Service Water Systems

The systems are addressed in Section 2.5.3.2. The Station Service Water system design includes three open loop cooling water systems; the SW System, the HPSW and the ESW.

Service Water System

The SW system has an increase of 1.57°F over current operation for EPU and currently there is an approximate 1,200 gpm of flow margin. Therefore, IST program pumps and program valves are not impacted by EPU.

Emergency Service Water System

For the ESW system, the heat load increases are insignificant and flow demand, pump duty, and system pressure will not significantly change. Therefore, there is no effect to IST program components for EPU.

High Pressure Service Water System

The RHR shutdown cooling mode initiating pressure and temperature do not change with EPU. Therefore, there is no increase in the maximum HPSW heat load when the RHR heat exchangers operate in the shutdown cooling mode during normal reactor shutdown.

In order to eliminate credit for CAP for RHR and CS pump NPSH for LOCAs at EPU conditions, an RHR heat exchanger cross-tie modification will be installed which will enable the operator to align a second RHR heat exchanger for suppression pool cooling (SPC). The additional cooling capacity will result in a peak suppression pool temperature that is lower than the current peak temperature at CLTP. There is no increase in the required HPSW flow to any RHR heat exchanger and ultimately no change in pressure.

The effect on HPSW is that a second HPSW pump will be required to be started at one hour post-LOCA to supply the design 4,500 gpm cooling water flow to the second RHR heat exchanger. There is no increase in the required HPSW flow to any RHR heat exchanger and ultimately no change in pressure.

To support the RHR heat exchanger cross-tie modification, the HPSW pump for the second RHR heat exchanger has to be powered from the division that is not powering the operating RHR pump in the accident unit. In order to get the water to the heat exchanger in one division from an HPSW pump in the other division, the HPSW divisional cross-tie MOV (existing valve) must be opened.

The existing valves MO-2-32-2344 & MO-3-32-3344 will be replaced with valves capable of full differential pressure across the valves. This modification is described in EPU LAR Enclosure 9d. The change to the IST program will be evaluated as part of the design configuration control process at PBAPS. All other HPSW components remain acceptable for EPU.

2.2.4.3 Individual Component Evaluations

Valves Affected by Changes in Containment Response

Certain MOVs in the program are affected by changes in the containment response, see Section 2.6.1.1. These valves were evaluated and 13 were found to have less than acceptable margin. The valves and their results are presented in Table 2.2-14. Modifications are required for those valves identified in the table with low and negative margins.

Conclusion

Exelon has reviewed the assessments related to the functional performance of safety-related valves and pumps and concludes the effects of the proposed EPU on safety-related pumps and valves have been adequately addressed. Exelon further concludes the effects of the proposed EPU on its MOV programs related to GL 89-10, GL 96-05, and GL 95-07, and the lessons learned from those programs to other safety-related, power-operated valves have been adequately evaluated. Based on this, Exelon concludes the safety-related valves and pumps will continue to meet the requirements of 10 CFR 50.55a(f) and the current licensing basis, following implementation of the proposed EPU. Therefore, Exelon finds the proposed EPU acceptable with respect to safety-related valves and pumps.

2.2.5 Seismic and Dynamic Qualification of Mechanical and Electrical Equipment

Regulatory Evaluation

Mechanical and electrical equipment covered by this section includes equipment associated with systems that are essential to emergency reactor shutdown, containment isolation, reactor core cooling, and containment and reactor heat removal. Equipment associated with systems essential for preventing significant releases of radioactive materials to the environment are also covered by this section. The review focused on the effects of the proposed EPU on qualifying equipment to withstand seismic events and the dynamic effects associated with pipe-whip and JI forces.

The primary input motions due to the safe shutdown earthquake (SSE) are not affected by an EPU. The regulatory acceptance criteria are based on: (1) GDC-1, insofar as it requires SSCs important to safety be designed, fabricated, erected, and tested to quality standards commensurate with the importance of the safety functions to be performed; (2) GDC-30, insofar as it requires components that are part of the RCPB be designed, fabricated, erected, and tested to the highest quality standards practical; (3) GDC-2, insofar as it requires SSCs important to safety be designed to withstand the effects of earthquakes combined with the effects of normal or accident conditions; (4) 10 CFR 100, Appendix A, which sets forth the principal seismic and geologic considerations for evaluating the suitability of plant design bases established in considering the seismic and geologic characteristics of the plant site; (5) GDC-4, insofar as it requires SSCs important to safety be designed to accommodate the effects of and to be compatible with the environmental conditions associated with normal operation, maintenance, testing, and postulated accidents; (6) GDC-14, insofar as it requires the RCPB be designed, fabricated, erected, and tested so as to have an extremely low probability of rapidly propagating fracture; and (7) 10 CFR 50, Appendix B, which sets QA requirements for safety-related equipment.

Peach Bottom Current Licensing Basis

The general design criteria listed in RS-001 are those currently specified in 10 CFR 50, Appendix A. The applicable PBAPS principal design criteria predate these criteria. The PBAPS principal design criteria are listed in UFSAR Section 1.5, "Principal Design Criteria." In 1967, the Atomic Energy Commission (AEC) published for public comment a revised set of proposed General Design Criteria (Federal Register 32 FR 10213 (Reference 9), July 11, 1967). Although not explicitly licensed to the AEC proposed General Design Criteria published in 1967, Philadelphia Electric Company (PECO), the predecessor to Exelon, performed a comparative evaluation of the design basis of PBAPS Units 2 and 3 against the AEC proposed General Design Criteria of 1967. The PBAPS UFSAR, Appendix H, "Conformance to AEC (NRC) Criteria," contains this comparative evaluation. UFSAR Appendix H provides a comparative evaluation with each of the groups of criteria set out in the July 1967 AEC release. As to each group of criteria, there is a statement of Exelon's understanding of the intent of the criteria in that group and a discussion of the plant design conformance with the intent of the group of criteria. Following a restatement of each of the proposed criteria is a list of references to locations in the PBAPS UFSAR where there is subject matter relating to the intent of that particular criteria.

For the current GDC listed in the Regulatory Evaluation above, the PBAPS comparative evaluation of the comparable 1967 AEC proposed General Design Criteria (referred to here as "Draft GDC") is contained in PBAPS UFSAR Appendix H: Draft GDC-1, Draft GDC-2, Draft GDC-5, Draft GDC-9, Draft GDC-16, Draft GDC-33, Draft GDC-40, and Draft GDC-42.

The Seismic and Dynamic Qualification of Mechanical and Electrical Equipment is described in PBAPS UFSAR Section 12.2, "Design and Description" and Appendix C, "Structural Design Criteria."

Technical Evaluation

NEDC-33004P-A, Revision 4, "Constant Pressure Power Uprate," Class III, July 2003 (also referred to as CLTR) was approved by the NRC as an acceptable method for evaluating the effects of CPPUs. Sections 10.1 and 10.3 of the CLTR address the effect of CPPU on the seismic and dynamic qualification of mechanical and electrical equipment.

The EPU dynamic forces (pipe whip and JI loads) are bounded by the current licensing basis pipe whip and JI loads (see Section 2.2.2). The primary input motions due to the safe shutdown earthquake are not affected by an EPU and therefore, there are no consequences to the existing seismic analyses. No quality standards related to the design, fabrication, erection, and testing of the RCPB or SSCs important to safety are relaxed or removed as a result of the EPU and no changes have been made to the plant design bases established in consideration of the seismic and geologic characteristics of the plant site.

The increase in radiation levels experienced by equipment during normal operation and accident conditions is expected to be proportional to the increase in power level. There is only a very small effect on pressure and temperature conditions due to the constant pressure assumption. Operation at EPU conditions increases the normal process temperature only in areas near the FW lines. However, the increases are expected to have little or no impact on the mechanical equipment materials.

The EQ program for electrical equipment is discussed in Section 2.3.1. The PBAPS design and licensing basis does not require a formal mechanical equipment qualification (MEQ) program such as the EQ program for electrical equipment. PBAPS uses other existing programs to evaluate the qualification of mechanical components. The key elements are design control, procurement evaluations, testing/preventative maintenance and equipment monitoring in accordance with the maintenance rule. The design control program ensures that mechanical components are specified and procured for the environment in which they are intended to function. Periodic maintenance and testing are performed in accordance with plant and industry operating experience and vendor recommendations to ensure continued functionality. The maintenance rule program also includes incorporation of industry-wide operating experience.

The mechanical design of equipment/components (e.g., pumps, heat exchangers) in certain systems is affected by operation at EPU due to slightly increased temperatures (< 10%), and in some cases, flows (≤ 15%). However, experience has shown that the uprated operating conditions do not significantly affect the CUFs of mechanical components.

EPU effects on fluid induced loads are described in Section 2.6.1.2. Dynamic loading evaluations remain bounded; therefore, there are no effects on safety-related components. Increased nozzle loads and component support loads due to the revised operating conditions were evaluated within the piping assessments in Section 2.2. These increased loads are insignificant, and become negligible (i.e., remain bounded) when combined with the governing dynamic loads. Therefore, the mechanical components and component supports are adequately designed for EPU conditions.

Conclusion

Exelon has reviewed the evaluations of the effects of the proposed EPU on the qualification of mechanical and electrical equipment and concludes it: (1) adequately addressed the effects of the proposed EPU on this equipment and (2) demonstrated the equipment will continue to meet the requirements of 10 CFR 100, Appendix A, 10 CFR 50, Appendix B, and the current licensing basis, following implementation of the proposed EPU. Therefore, Exelon finds the proposed EPU acceptable with respect to the qualification of the mechanical and electrical equipment.

Table 2.2-1 High Energy Line Break Outside Containment: Liquid Line Breaks

	High Energy Line Break Outside Containment Change Due to EPU		
Break Location	**Mass Release Rate**	**Pressure**	**Temperature**
RWCU Line Break	Increased - Recalculated for CLTP and EPU conditions.	Increased.	Increased.
FWLB outside containment	Negligible Increase.	No Change(1)	No Change(1)

(1) The EPU evaluation concludes that the minor changes in FWLB mass and energy releases associated with increased FW flow and a 2°F increase in FW temperature, for operation at 102% of EPU thermal power, will not challenge the bases for the HELB analysis of record disposition which concludes that the effects of a FWLB are bounded by the effects of postulated MSL breaks.

Table 2.2-2 Reactor Coolant Pressure Boundary Structural Evaluation

System	Temperature		Pressure		Flow Rate		Mechanical Loading
	CLTP	EPU	CLTP	EPU	CLTP	EPU	
[[							
							]]

Table 2.2-3a

Percentage Increase In Class 1 Pipe Stresses, Usage Factors, Interface Loads, and Thermal Displacements for PBAPS Piping Systems Due to EPU Conditions

ASME Code Equation No.	Piping Catagories			
	C			
	Reactor Recirculation Discharge			
	Flow	Temp	Press	Total (2)
9A	N/A	N/A	N/A	N/A
9B	N/A	N/A	N/A	N/A
9C	N/A	N/A	N/A	N/A
9D	N/A	N/A	N/A	N/A
10	N/A	-0.609	0.048	-0.56
12	N/A	-1.719	0.008	-1.71
13	N/A	-0.026	0.079	0.05
14 (1)	N/A	-6.938	0.503	-6.47
Interface Loads	N/A	-0.377	0.013	-0.36
Thermal Displacement	N/A	-0.828	0.004	-0.82

Notes:

N/A Not affected due to EPU

(1) Fatigue – Cumulative Usage Factor

(2) Relative change based on projected reactor recirculation conditions shown for information only. Pressure and temperature used in analysis of record bound both CLTP and EPU conditions and consequently the stress and load under EPU.

Table 2.2-3b

Percent Increase In Class 2, 3 and/or B31.1 Pipe Stresses, Interface Loads, and Displacements for PBAPS Piping Systems Due To EPU Conditions

B31.1 Code Equation No.	Piping Catagories						
	A			B			
	Main Steam			Feedwater			
	Flow	Pr&T	Total	Flow	Temp	Press	Total (1)
11	N/A	N/A	N/A	N/A	N/A	N/A	N/A
12B	N/A	N/A	N/A	N/A	N/A	N/A	N/A
12C	N/A	N/A	N/A	N/A	N/A	N/A	N/A
12D	N/A	N/A	N/A	N/A	N/A	N/A	N/A
13	N/A	N/A	N/A	N/A	0.556	0.667	1.23
14	N/A	N/A	N/A	N/A	0.807	0.030	0.84
Interface Loads	N/A	N/A	N/A	N/A	1.015	0.246	1.26
Thermal Displacement	N/A	N/A	N/A	N/A	0.801	0.025	0.83

Notes:

N/A - No effect due to EPU. Per the original PBAPS piping code, Reference 41, dynamic loading associated with fluid transient events is not included in the FW stress analyses. Note that the TSV Closure transient is added to the EPU design basis and evaluated in new MS piping analyses for EPU. The results of these analyses are presented in Table 2.2-4a.

Pr&T = Pressure and Temperature

(1) Relative change based on reactor heat balance conditions shown for information only. Pressure and temperature used in analysis of record bound both CLTP and EPU conditions and consequently the stress and load under EPU.

Table 2.2-4a Main Steam Pipe Stresses Due to EPU Conditions

Maximum Stress Summary: Units 2/3 Loop A

Service Level	Equation	Node	CLTP Stress (psi)	EPU Stress (psi)[3]	EPU Allowable (psi)	EPU Interaction Ratio
Service Level A	Eq. 11	32E	Note 1	9,165	15,000	0.611
Service Level B	Eq. 12B	24B	Note 1	18,763	18,000	1.042[2]
Service Level C	Eq. 12C	24B	Note 1	20,073	27,000	0.743
Service Level D	Eq. 12D	24B	Note 1	23,419	36,000	0.651
Thermal Expansion	Eq. 13	24V	Note 1	12,599	22,500	0.560

Maximum Stress Summary: Units 2/3 Loop B

Service Level	Equation	Node	CLTP Stress (psi)	EPU Stress (psi)[3]	EPU Allowable (psi)	EPU Interaction Ratio
Service Level A	Eq. 11	67	Note 1	7,951	15,000	0.530
Service Level B	Eq. 12B	C75	Note 1	19,656	18,000	1.092[2]
Service Level C	Eq. 12C	83B	Note 1	21,795	27,000	0.807
Service Level D	Eq. 12D	83V	Note 1	40,615	36,000	1.128[2]
Sustained + Thermal	Eq. 14	78	Note 1	35,898	43,750	0.821

Maximum Stress Summary: Unit 2 Loop C

Service Level	Equation	Node	CLTP Stress (psi)	EPU Stress (psi)[3]	EPU Allowable (psi)	EPU Interaction Ratio
Service Level A	Eq. 11	72E	Note 1	9,165	15,000	0.611
Service Level B	Eq. 12B	67B	Note 1	11,112	18,000	0.617
Service Level C	Eq. 12C	67B	Note 1	11,252	27,000	0.417
Service Level D	Eq. 12D	67B	Note 1	11,719	36,000	0.326
Sustained + Thermal	Eq. 14	78	Note 1	35,516	43,750	0.812

Table 2.2-4a Main Steam Pipe Stresses Due to EPU Conditions (continued)

Maximum Stress Summary: Units 2/3 Loop D

Service Level	Equation	Node	CLTP Stress (psi)	EPU Stress (psi)[3]	EPU Allowable (psi)	EPU Interaction Ratio
Service Level A	Eq. 11	32E	Note 1	9,165	15,000	0.611
Service Level B	Eq. 12B	24B	Note 1	20,321	18,000	1.129[2]
Service Level C	Eq. 12C	24B	Note 1	21,576	27,000	0.799
Service Level D	Eq. 12D	24B	Note 1	21,757	36,000	0.604
Sustained + Thermal	Eq. 13	24V	Note 1	12,536	22,500	0.557

Maximum Stress Summary: Unit 3 Loop C

Service Level	Equation	Node	CLTP Stress (psi)	EPU Stress (psi)[3]	EPU Allowable (psi)	EPU Interaction Ratio
Service Level A	Eq. 11	72E	Note 1	9,165	15,000	0.611
Service Level B	Eq. 12B	67B	Note 1	11,806	18,000	0.656
Service Level C	Eq. 12C	67B	Note 1	11,897	27,000	0.441
Service Level D	Eq. 12D	67B	Note 1	12,219	36,000	0.339
Sustained + Thermal	Eq. 14	78	Note 1	35,516	43,750	0.812

Note 1: EPU analysis introduces new TSV Closure loads and additional snubbers. Therefore, the CLTP stress value for comparison would not be meaningful.

Note 2: B31.1 2004 Code reconciliation (Reference 40) allows for interaction ratio of up to 1.14.

Note 3: EPU stress results assume implementation of pipe support modifications as described in EPU LAR Attachment 9.

Table 2.2-4b Feedwater Pipe Stresses Due to EPU Conditions

Primary Containment Stress for 24-inch Feedwater Piping

B31.1 Equation	Description	Node Joint	Node Type	Maximum Stress (psi)	Scaling Factor (1)	EPU Stress (psi)	Allowable (psi)	Stress Ratio
11	Pressure + Dead Weight (Normal)	8	Straight	7,455	1.0	7,455	15,000 (=Sh)	0.497
12U	Normal + DE	8	Elbow	11,650	1.0	11,650	18,000 (=1.2*Sh)	0.647
12F	MaxP + Dead Weight+MCE	8	Elbow	17,945	1.0	17,945	26,500 (=Sy)	0.677
13	Thermal Expansion	8	Straight	4,053	1.0	4,053	22,500 (=SA+Sh)	0.180

Note 1: Current analyzed pressures and temperatures bound EPU operating parameters; therefore, a change factor of 1.00 is utilized.

Primary Containment Stress for 20-inch Feedwater Piping

B31.1 Equation	Description	Node Joint	Node Type	Maximum Stress (psi)	Scaling Factor (1)	EPU Stress (psi)	Allowable (psi)	Stress Ratio
11	Pressure + Dead Weight (Normal)	17	Straight	7,440	1.0	7,440	15,000 (=Sh)	0.496
12U	Normal + DE	17	Straight	10,703	1.0	10,703	18,000 (=1.2*Sh)	0.595
12F	MaxP + Dead Weight+MCE	17	Straight	15,271	1.0	15,271	26,500 (=Sy)	0.576
13	Thermal Expansion	95	Straight	2,878	1.0	2,878	22,500 (=SA+Sh)	0.128

Note 1: Current analyzed pressures and temperatures bound EPU operating parameters; therefore, a change factor of 1.00 is utilized.

Table 2.2-4b Feedwater Pipe Stresses Due to EPU Conditions (continued)

Primary Containment Stress for 12-inch Feedwater Piping

B31.1 Equation	Description	Node Joint	Node Type	Maximum Stress (psi)	Scaling Factor (1)	EPU Stress (psi)	Allowable (psi)	Stress Ratio
11	Pressure + Dead Weight (Normal)	33	Straight	4,707	1.0	4,707	15,000 (=Sh)	0.314
12U	Normal + DE	33	Elbow	13,087	1.0	13,087	18,000 (=1.2*Sh)	0.727
12F	MaxP + Dead Weight+MCE	33	Elbow	24,819	1.0	24,819	26,500 (=Sy)	0.937
13	Thermal Expansion	71	Elbow	15,038	1.0	15,038	22,500 (=SA+Sh)	0.668

Note 1: Current analyzed pressures and temperatures bound EPU operating parameters; therefore, a change factor of 1.00 is utilized.

Table 2.2-4c Reactor Recirculation Pipe Stresses Due to EPU Conditions

Maximum Stress Summary: Loop A

Section III Class I Equation	Description	Node	Node Type	Maximum Stress (psi)	Scaling Factor (1)	EPU Stress (psi)	Allowable (psi) (2)	Stress Ratio
9 Design	Pressure + Dead Weight +OBE (Normal)	96	Straight	24,760	1.0	24,760	25,875	0.957
9B	MaxP + Dead Weight+OBE	96	Straight	25,219	1.0	25,219	29,289	0.861
9C	Pressure+Dead Weight+SSE	45F	Elbow	29,261	1.0	29,261	39,052	0.749
9D	Pressure+Dead Weight+SSE	45F	Elbow	29,261	1.0	29,261	39,052	0.749
12	Thermal Expansion	66	Tee	36,010	1.0	36,010	51,750	0.696
13	Pressure+Dead Weight+OBE	62	Reducer	45,171	1.0	45,171	51,750	0.873

Note 1: Current analyzed pressures and temperatures bound EPU operating parameters; therefore, a change factor of 1.00 is utilized.
Note 2: Allowable stresses are taken from the original design basis analysis.

Table 2.2-4c Reactor Recirculation Pipe Stresses Due to EPU Conditions (continued)

Maximum Stress Summary: Loop B

Section III Class I Equation	Description	Node	Node Type	Maximum Stress (psi)	Scaling Factor (1)	EPU Stress (psi)	Allowable (psi) (2)	Stress Ratio
9 Design	Pressure + Dead Weight +OBE (Normal)	181	Straight	23,774	1.0	23,774	25,875	0.919
9B	MaxP + Dead Weight+OBE	96	Straight	25,148	1.0	25,148	29,289	0.859
9C	Pressure+Dead Weight+SSE	96	Straight	26,839	1.0	26,839	39,052	0.687
9D	Pressure+Dead Weight+SSE	96	Straight	26,839	1.0	26,839	39,052	0.687
12	Thermal Expansion	85	Tee	34,396	1.0	34,396	51,750	0.665
13	Pressure+Dead Weight+OBE	330	Taper	40,887	1.0	40,887	51,750	0.790

Note 1: Current analyzed pressures and temperatures bound EPU operating parameters; therefore, a change factor of 1.00 is utilized.

Note 2: Allowable stresses are taken from the original design basis analysis.

Table 2.2-4c Reactor Recirculation Pipe Stresses Due to EPU Conditions (continued)

Maximum Equation 14 CUFs for Reactor Recirculation

Loop	Description	Node	Node Type	Maximum Usage	Scaling Factor (1)	EPU Usage	HELB Limit	HELB Location	Code Allowable	Accept-able
Loop A	Recirculation Discharge to Pump Outlet	62	Straight	0.109	1.0	0.109	0.100	Yes	1.000	Yes
Loop A	Recirculation Discharge to Pump Outlet	186	Valve	0.083	1.0	0.083	0.100	No	1.000	Yes
Loop B	Recirculation Discharge to Pump Outlet	85	Tee	0.109	1.0	0.109	0.100	Yes	1.000	Yes
Loop B	RHR Return to RPV Nozzles	340	Valve	0.085	1.0	0.085	0.100	No	1.000	Yes

Note 1: Current analyzed pressures and temperatures bound EPU operating parameters; therefore, a scaling factor of 1.00 is utilized.

Table 2.2-5a Main Steam System Piping (Outside Containment)

Maximum Stress Interactions for Main Steam Piping Outside Containment						
Service Level		CLTP Stress (1) (psi)	EPU Stress (2) (psi)	Node	Allowable (psi)	Interaction Ratio
EQN. 11	Sustained	10,201	9,710	257	15,000	0.647
EQN. 12 LEVEL B	Occasional (Upset)	21,461	20,114	C96	21,000	0.958
EQN. 12 LEVEL C	Occasional (Emergency)	N/A	15,499	GC5	21,600	0.718
EQN. 12 LEVEL D	Occasional (Faulted)	27,298	23,568	GC5	28,800	0.818
EQN. 13	Thermal Expansion	3,716	5,926 (3)	GC5	18,000	0.329
EQN. 14	Sustained + Thermal Expansion	11,714	N/A	N/A	N/A	N/A
EQN. 12B + EQN. 13	HELB	22,997	19,579	GC5	24,000	0.815

(1) CLTP stress from previous MS piping analysis; based on single loop analysis for Line D between the containment penetration anchor and the TSV (did not include turbine leads from TSV to high pressure (HP) turbine nozzles).

(2) EPU stress from new, reconstituted MS piping analysis; based on all four loops between the containment penetration anchor and the high pressure turbine inlet nozzles. EPU stresses assume implementation of pipe support modifications, as described in EPU LAR Attachment 9.

(3) Thermal stress increase from CLTP analysis of record is not due to EPU changes.

Maximum pipe stress increase from CLTP analysis: Temperature expansion Pressure Fluid Transients	 No EPU impact No EPU impact **
Maximum pipe support loading increase (due to thermal expansion loading):	No EPU impact

** The MS piping analysis was revised to evaluate increased TSVC fluid transient loading with EPU. The reconstituted MS piping analysis results in MS piping meeting all Code criteria, with implementation of required support modifications, as described in EPU LAR Attachment 9.

Table 2.2-5b Feedwater Piping

Maximum Stress for Feedwater Piping Outside Containment (1)						
Service Level		Node	CLTP Stress (psi)	EPU Stress (psi)	Allowable (psi)	Interaction Ratio
EQN. 11	Sustained	436	10,532	10,532	15,000	0.702
EQN. 12 LEVEL B	Occasional (Upset)	440	11,742	11,742	18,000	0.652
EQN. 12 LEVEL D	Occasional (Faulted)	440	21,161	21,161	36,000	0.588
EQN. 13	Thermal Expansion	245	19,682	19,682	22,500	0.875

(1) Maximum stress between Units 2 & 3 analyses – seismic portion of FW piping.

Maximum pipe stress increase from CLTP analysis:	
Temperature expansion	0% *
Pressure	0% *
Fluid Transients	N/A *
Maximum pipe support loading increase (due to thermal expansion loading):	0% *

* The maximum increase in FW temperature range from CLTP to EPU is 1.9%. However, FW piping design analyses are performed to design pressures and temperatures which bound the EPU operating conditions. There is no fluid transient loading in the current FW piping design basis.

Table 2.2-5c Condensate Piping

Maximum pipe stress increase from CLTP analysis:	
Temperature expansion	1.9%
Pressure	0% *
Fluid Transients	N/A *
Maximum pipe support loading increase (due to thermal expansion loading):	1.9%

* Condensate piping design pressure remains bounding for EPU. There is no fluid transient loading in the current condensate piping design basis.

Table 2.2-5d Extraction Steam Piping

Maximum pipe stress increase from CLTP analysis:	
Temperature expansion	3.3%
Pressure	0% *
Fluid Transients	N/A *
Maximum pipe support loading increase (due to thermal expansion loading):	3.3%

* Extraction steam piping design pressure remains bounding for EPU. There is no fluid transient loading in the current extraction steam piping design basis.

Table 2.2-5e FW Heater Drains & Vents Piping

Maximum pipe stress increase from CLTP analysis:	
Temperature expansion	3.3%
Pressure	0% *
Fluid Transients	N/A *
Maximum pipe support loading increase (due to thermal expansion loading):	3.3%

* FW Heater Drains and Vents piping design pressure remains bounding for EPU. There is no fluid transient loading in the current FW Heater Drains and Vents piping design basis.

Table 2.2-5f Moisture Separator Vents and Drains Piping

Maximum pipe stress increase from CLTP analysis:	
Temperature expansion	3.3%
Pressure	0% *
Fluid Transients	N/A *
Maximum pipe support loading increase (due to thermal expansion loading):	3.3%

* Moisture Separator Vents and Drains piping design pressure remains bounding for EPU. There is no fluid transient loading in the current Moisture Separator Vents and Drains piping design basis.

Table 2.2-6 BOP Piping System Evaluation

System	Temperature (°F)		Pressure (psig)		Flowrate (Mlb/hr)		Mechanical Loading
	CLTP	EPU	CLTP	EPU	CLTP	EPU	
Condensate Piping (Condenser to Condensate Pump)	124.2	129.1	-6.6	-6.3	14.41	16.32	No change in mechanical loading
FW Piping (from Reactor Feedwater Pump (RFP) to RPV)	379.1	385.1	1098.4	1115.0 (1)	14.32	16.23	No change in mechanical loading
MS Piping (max conditions at RPV)	550.5	550.5	1035.3	1035.3	14.35	16.26	TSV loading changes with increased flow rate
Extraction Steam Piping (HP turbine exhaust to 5th stage heater)	385.3	395.8	193.9	221.0	0.92	1.24	No change in mechanical loading
FW Heater Drains (5th stage heater to 4th stage heater)	340.3	339.8	191.4	217.7	0.92	1.24	No change in mechanical loading

(1) With condensate pump upgrade modifications

Table 2.2-7 CUFs and S_{p+q} Values of Limiting Components

	P + Q Stress (ksi)			CUF [4]				
Component [1]	Current (3514 Mwt) [8]	EPU (4030 MWt) [3]	Allowable (ASME Code Limit)	Current 40 years (3514 Mwt) [8,10]	Current 60 years (3514 Mwt)	EPU [23] (4030 MWt) [3]	EPU with Environ-mental Fatigue U_{en}	Allowable
FW Nozzle Node A [6] Node B [6] Node C [6] Node D [6] Node E [6] Node F [6] Nozzle Blend Radius [22]	(See below)	(See below)	(See below)	<1.0	<1.0 [19]	- See Note 15 - 0.840(s) + 0.000(r) = 0.840 0.625(s) + 0.324(r) = 0.949 0.625(s) + 0.324(r) = 0.949 0.806(s) + 0.701(r) = 1.507 [21, 22] 0.845(s) + 0.003(r) = 0.848 0.359(s) + 0.097(r) = 0.456 0.144(s) + 1.453(r) = >1 [20]	0.677[24]	1.0
Nozzle (Node 259 = Limiting) (Node 357 = Limiting)	56.2 [18] 32.9 [18]	68.6 39.15	80.1 40.05 [9]	(See above)	(See above)	(See above)	(See above)	-
Safe End (Node 126 = Limiting)	81.1 / 29.0 [2]	97.7 / 34.3[2]	54.6	0.997	<1.0 [19]	(See above)	(See above)	1.0

Table 2.2-7 CUFs and S_{p+q} Values of Limiting Components (Continued)

	P+Q Stress (ksi)			CUF[4]				
Component[1]	Current (3514 Mwt)[8]	EPU (4030 MWt)[3]	Allowable (ASME Code Limit)	Current 40 years (3514 Mwt) [8,10]	Current 60 years (3514 Mwt)	EPU[23] (4030 MWt)[3]	EPU with Environ-mental Fatigue U_{en}	Allowable
Steam Outlet Nozzle								
Nozzle to Shell Junction	27.01	33.65	80.0	Exempt[13]	Exempt[13]	See Note 5	NA	1.0
	26.79 [14]	33.37 [14]	40.0 [9]					
Nozzle to Safe End Weld	18.01 [14]	22.44 [14]	27.3 [9]	Exempt[13]	Exempt[13]	See Note 5	NA	1.0
Recirculation Inlet Nozzle								
Nozzle	51.9	59.9	80.1	See Note 4	See Note 4	See Note 4	0.618[24]	-
Safe End	113.6 / 45.6 [2]	120.2 / 48.6 [2]	51.75	0.549 [11, 12]	0.824 [16]	0.661 / 0.991 [7]		1.0
Recirculation Outlet Nozzle								
Unit 2	39.5	44.0	53.0	0.30	0.45[16]	See Note 5		1.0
	65.5	72.9	80.0				0.282[25]	
Unit 3	65.5 / 35.8 [2]	69.5 / 38.0 [2]	51.75	0.565 [11]	0.848[16]	0.594 / 0.891 [7]		1.0

Notes for Table 2.2-7:

1. Only components with usage factors [[ ]] are shown.
2. Thermal Bending included/Thermal bending removed. P + Q stresses are acceptable per CLTP elastic-plastic analysis. Method is also valid for EPU conditions.
3. EPU was conservatively evaluated for 102% of EPU (3951 * 1.02 = 4030 MWt).
4. Only the limiting CUF is presented.
5. CUF is less than the EPU evaluation threshold. Component is listed in table to present change in P+Q.
6. Node locations: A = Outboard Edge of Primary Sealing Surface, B = Inboard Edge of Primary Sealing Surface, C = Outboard Edge of Secondary Sealing Surface, D = Inboard Edge of Secondary Sealing Surface, E = Point between 'D' and 'F', F = End of Deep Bore Cut.
7. Value reported for 40-year license and 60-year license (40-year value / 60-year value)
8. CLTP was conservatively evaluated at 102% of the Stretch power uprate level (3458 * 1.02 = 3527 MWt).
9. 1.5 * Sm
10. Values for 60-year License were not available to GEH for comparison.
11. Calculation did not include Flow Scaling Factor.
12. Calculation did not include additional nozzle loading.
13. Exempt from fatigue evaluation by meeting requirements of Paragraph N415.1 of ASME Code.
14. Membrane + Pressure Stress only.
15. The system(s) cycling was [[ ]].
16. Values reported for 60-year License are based [[ ]].
17. Not Used
18. CLTP evaluation did not re-evaluate this component, thus OLTP values are reported for comparison.
19. Managed via fatigue tracking and management program.
20. While CUF exceeds ASME allowable (1.0), qualification of this component can be performed by inspection using NUREG-0619 (Reference 46) or GE Alternate Methods (Reference 47).
21. The CUF is 0.982 at 50 years [[ ]] remains <1.0 (allowable) for the double piston triple thermal sleeve design.
22. When nozzle refurbishment is performed at 50-years, the 60-year CUF = 0.989.
23. The CUF values for EPU do not consider the effects of reactor coolant environment on fatigue life of components.
24. For bounding location.
25. Bounding for both PBAPS units.

Table 2.2-8 RIPDs for Normal Conditions

Parameter	CLTP [1] (psid)	EPU [2] (psid)
Shroud Support Ring and Lower Shroud	32.43	34.11
Core Plate and Guide Tube	24.22	24.94
Upper Shroud	8.51	9.46
Shroud Head	9.08	10.08
Shroud Head to Water Level (Irreversible [3])	11.74	12.85
Shroud Head to Water Level (Elevation [3])	0.93	0.85
Fuel Channel Wall (Maximum Power Bundle)	11.40	12.36
Top Guide	0.75	0.75

Notes:

1. At 110% rated core flow with GE14 fuel.
2. At 110% rated core flow with GE14 fuel. The GE14 fuel is the limiting fuel (bounds GNF2) for RIPD with Normal conditions at EPU.
3. Irreversible loss is the loss across the separators; the elevation loss or reversible head loss is the loss between the inside shroud (at the midpoint between the top of fuel and the shroud dome) and the exit of the separators.
4. See EPU LAR Attachment 17 for Replacement Steam Dryer values.

Table 2.2-9 RIPDs for Upset Conditions

Parameter	CLTP [1] (psid)	EPU [2] (psid)
Shroud Support Ring and Lower Shroud	34.83	36.51
Core Plate and Guide Tube	26.62	27.34
Upper Shroud	12.76	14.20
Shroud Head	13.62	15.13
Shroud Head to Water Level (Irreversible [3])	17.62	19.28
Shroud Head to Water Level (Elevation [3])	1.39	1.28
Fuel Channel Wall (Maximum Power Bundle)	14.30	< 14.5
Top Guide	0.85	0.85

Notes:

1. At 110% rated core flow with GE14 fuel.
2. At 110% rated core flow with GE14 fuel. The GE14 fuel is the limiting fuel (bounds GNF2) for RIPD with Upset conditions at EPU.
3. Irreversible loss is the loss across the separators; the elevation loss or reversible head loss is the loss between the inside shroud (at the midpoint between the top of fuel and the shroud dome) and the exit of the separators.
4. See EPU LAR Attachment 17 for Replacement Steam Dryer values.

Table 2.2-10 RIPDs for Faulted Conditions

Parameter	CLTP [1] (psid)	EPU [2] (psid)
Shroud Support Ring and Lower Shroud	53	53
Core Plate and Guide Tube	29.0	29.5
Upper Shroud	30	32
Shroud Head	30	32
Shroud Head to Water Level (Irreversible [3])	32	34
Shroud Head to Water Level (Elevation [3])	2.4	2.4
Fuel Channel Wall (Maximum Power Bundle)	15.6	14.5
Top Guide	2.0	2.0

Notes:

1. Values are the maximum results from either the cavitation interlock power or the high power with GE13 fuel at 110 % rated core flow. The GE13 fuel is the limiting fuel (bounds GE14 and GNF2) for RIPD with Faulted conditions at CLTP.
2. Values are the maximum results from either the cavitation interlock power or the high power with GE14 fuel at 110 % rated core flow. Evaluations at these points considered both normal and reduced FW temperatures. The reduced FW temperature of 90 °F was used for EPU. The GE14 fuel is the limiting fuel (bounds GNF2) for RIPD with Faulted conditions at EPU.
3. Irreversible loss is the loss across the separators; the elevation loss or reversible head loss is the loss between the inside shroud (at the midpoint between the top of fuel and the shroud dome) and the exit of the separators.
4. See EPU LAR Attachment 17 for Replacement Steam Dryer values.

Table 2.2-11 Governing Stress Results for RPV Internal Components

No.	Component	CLTP			1.02xEPU					
		Service Level	Unit	Value	Location	Service Level	Stress Category /Other	Unit	Value [1]	Allowable
1	Shroud	B	psi	15,670	Top Guide Wedge	B	P_m+P_b	psi	18,070	21,450
2	Shroud Support [4]	B	psi	32,450	Legs	B	P_m+P_b	psi	34,720	35,000
3	Core Plate	B	psi	27.57	Longest Beam	B	ΔP	psi	27.34	31.64
4	Top Guide	B	psi	34,200	Longest Beam	B	P+Q	psi	34,200	50,700
5	CRD Housing	B	psi	13,090	CRD Housing inside RPV	B	P_m	psi	13,090	16,185
6.a	Control Rod Guide Tube	D	psi	11,408	Tube	D	P_m	psi	11,408	16,000
6.b	Control Rod Guide Tube	B	N/A	0.42	Mid-span	B	Buckling Criteria	N/A	0.42	0.45
7	Orificed Fuel Support	B	psi	N/A	OFS Body	B	P_m+P_b	psi	6,682	15,580
8	Fuel Channel				Qualified By GNF proprietary method					

Table 2.2-11 Governing Stress Results for RPV Internal Components (continued)

No.	Component	CLTP			1.02xEPU					
		Service Level	Unit	Value	Location	Service Level	Stress Category /Other	Unit	Value [1]	Allowable
9	Shroud Head and Separators Assembly (Incl. SHBs)	A	Required number of bolts	29	N/A	A	N/A	Required number of bolts	32	Note 2
10.a	Jet Pump	D	psi	49,759	Riser Brace	D	P_m+P_b	psi	49,759	60,480
10.b		D	lbs.	18,100 Note 3	Beam Bolt	A	Load	lbs	15,212	17,442 Note 3
11	Access Hole Cover	D	psi	113,800	Bolt (Unit 3) Plate (Unit 2)	D	P_m+P_b	psi	147,481 (Unit 3) 69,272 (Unit 2)	154,000 (Unit 3) 69,900 (Unit 2)
12.a	CS Line	B	psi	15,370	Elbow	B	P_m+P_b	psi	15,370	20,920
12.b	CS Sparger	B	psi	6,000	Tee Junction	B	P_m	psi	6,000	21,450
13	FW Sparger	See Table 2.2-12 for fatigue usage factor			Header Pipe to Spray Nozzle Adaptor Weld	A, B	See Table 2.2-12 for fatigue usage factor			
14	In-Core Housing and Guide Tube	B	psi	<20,270	In-core housing at RPV Penetration	B	P_m	psi	<20,270	24,900
15	Core Differential Pressure Line	D	psi	29,340	Pipe	D	P_b	psi	29,340	49,950

Table 2.2-11 Governing Stress Results for RPV Internal Components (continued)

No.	Component	CLTP			1.02xEPU					
		Service Level	Unit	Value	Location	Service Level	Stress Category /Other	Unit	Value [1]	Allowable
16	Jet Pump Instrument Penetration Seal	B	psi	21,910	Safe end/Nozzle end	B	P+Q	psi	21,910	80,100

Notes:

[1] Stresses reported are for the limiting loading condition, with the least margin of safety. Normal condition loads are bounded by that of upset condition. See EPU LAR Attachment 17 for steam dryer evaluation.

[2] PBAPS Units 2 and 3 (each) currently have 31 SHBs installed. However, PBAPS Units 2 and 3 (each) can accommodate up to 48 uniformly spaced SHBs. For EPU operation, a minimum of 32 bolts are required to prevent lift off or separation of shroud head. Therefore, an adequate number of SHBs can be accommodated to ensure adequate safety margin exists.

[3] The beam bolt load calculation for CLTP conservatively used a higher riser pipe pressure and RIPD across shroud support plate resulting in a higher bolt load (18,100 lbs). The CLTP allowable load was the retained preload (22,800 lbs) without accounting for the reduction in preload due to the operating temperature and fluence. The EPU allowable preload of 17,442 lbs accounts for the reduction in preload due to 60 years fluence and operating temperature.

[4] The calculated stress for shroud support is conservative.

Table 2.2-12 Fatigue Usage for RPV Internal Components for Plant Life of 40-Years and 60-Years

No.	Component	CLTP and EPU CUF 40-yr Life	EPU CUF 60-yr Life	Allowable
1	Shroud Shroud Repair (See Note 4)	0.593 0.51	0.89 0.76	1.0
2	Shroud Support	0.17	0.26	1.0
3	Core Plate	<0.1	<0.1	1.0
4	Top Guide	0.435	0.65	1.0
5	CRD Housing	Negligible (See Note 1)		1.0
6	Control Rod Guide Tube	Negligible (See Note 2)		1.0
7	Orificed Fuel Support	Negligible (See Note 2)		1.0
8	Shroud Head and Separators Assembly (Incl. SHBs)	Negligible (See Note 3)		1.0
9	Jet Pump (riser brace)	0.14	0.22	1.0
10	Access Hole Cover	Negligible (See Note 3)		1.0
11a	CS Line	0.167	0.25	1.0
11b	CS Sparger	0.20	0.30	1.0
12	FW Sparger	0.32	0.48	1.0
13	In-Core Housing and Guide Tube	Negligible (See Note 3)		1.0
14	Core Differential Pressure Line	Negligible (See Note 3)		1.0

Notes:

1. The CRD Housing is primarily subjected to mechanical loadings; the thermal/secondary stresses are small. Small magnitude of the alternating stress (Sa) yields an infinite number of allowable fatigue cycles resulting in negligible fatigue usage factor.
2. The CRGT and OFS are primarily subject to mechanical loadings, and thermal/secondary stresses are small. Small magnitude of the alternating stress (Sa) yields an infinite number of allowable fatigue cycles.
3. The effect of temperature change on the thermal stress in RPV to shroud annulus and the lower plenum is deemed to be small; hence, the fatigue usage factor is deemed to be negligible.
4. The shroud repair has not been installed on either PBAPS unit.

Table 2.2-13 Systems with Pumps and Valves in the IST Program

System	System Number	IST Pumps	IST Valves	GL 96-05 (GL 89-10) Valves	AOV Program	System Impacted by EPU
MS	01A		X	X	X	X
MS Sampling	01J		X		X	X
Reactor & Recirculation	02					X
Recirc Pump & Valves	02A		X	X		X
Reactor Water Sampling	02E		X		X	X
Reactor Vessel Level Instrument Reference Leg Backfill System	02G		X			
Control Rod Drive	03		X		X	
Hydraulic Control Unit	03A		X		X	
Feedwater	06		X	X		X
Primary Containment	07					X
Primary Containment Leak Test	07A		X			X
Containment Atmosphere Control	07B		X		X	
Containment Atmospheric Dilution (CAD)	07C		X			
Drywell & Torus Sampling - CAC	07D		X			X
Drywell & Torus Sampling - CAD	07E		X			X
Traversing In Core Probe	07F		X			

Table 2.2-13 Systems with Pumps and Valves in the IST Program (Continued)

System	System Number	IST Pumps	IST Valves	GL 96-05 (GL 89-10) Valves	AOV Program	System Impacted by EPU
Standby Gas Treatment	09A		X		X	X
RHR	10	X	X	X	X	X
RHR Sampling	10A		X		X	X
Standby Liquid Control	11	X	X			X
RWCU	12		X	X		X
RCIC	13		X	X		X
RCIC Pump	13B	X	X			
RCIC Turbine	13C		X		X	
Core Spray	14	X	X		X	X
Torus Water Cleanup	14A		X	X		
Torus Water Sampling	14B					
Instrument Nitrogen System	16		X		X	
Backup Instr. Nitrogen to ADS	16A		X			
Backup Seismic Instr. Nitrogen	16B		X			
Fuel Pool Cooling	19					X
Radwaste	20A		X		X	
Radwaste	20B		X		X	
Post-Accident Sampling System	21		X			

Table 2.2-13 Systems with Pumps and Valves in the IST Program (Continued)

System	System Number	IST Pumps	IST Valves	GL 96-05 (GL 89-10) Valves	AOV Program	System Impacted by EPU
HPCI	23		X	X	X	
HPCI Pump	23B	X	X	X		
HPCI Turbine	23C	X	X		X	
Service Water	30		X			X
HPSW	32	X	X	X		X
Emergency Service Water	33	X	X	X	X	X
RBCCW	35		X	X		X
Service Air	36A		X			
Instrument Air	36B		X			
Breathing Air	36E					
Reactor Building Ventilation	40B		X		X	
Reactor Building Ventilation	40C		X		X	
Drywell Chilled Water	44A		X	X		
Emergency Cooling Water	48	X	X	X		
Emergency Cooling Water	48A	X				
Diesel Generator Starting Air	52C		X		X	
Diesel Generator Fuel Oil	52D	X	X			X
Drywell/Torus Radiation Monitoring	63G		X			

Table 2.2-14 EPU Effects to PBAPS Program Valves

Valve ID	Valve Function	Maximum Differential Pressure Change, psi	Ambient Temp Change	EPU Effect
MO-2-01A-074	Main Steam Line Drain Valves		+43°F	Acceptable with Temperature Change.
MO-3-01A-074	Main Steam Line Drain Valves		+43°F	Acceptable with Temperature Change.
MO-2-10-013A	RHR Pump Suction LPCI Isolation Valves	+ 16.9		Low Margin - Action Required
MO-2-10-013B	RHR Pump Suction LPCI Isolation Valves	+ 16.9		Low Margin - Action Required
MO-2-10-013C	RHR Pump Suction LPCI Isolation Valves	+ 16.9		Medium Margin - Action Recommended
MO-2-10-013D	RHR Pump Suction LPCI Isolation Valves	+ 16.9		Negative Margin - Action Required Before Implementation
MO-3-10-013A	RHR Pump Suction LPCI Isolation Valves	+ 16.9		Negative Margin - Action Required Before Implementation
MO-3-10-013B	RHR Pump Suction LPCI Isolation Valves	+ 16.9		Negative Margin - Action Required Before Implementation
MO-3-10-013C	RHR Pump Suction LPCI Isolation Valves	+ 16.9		Negative Margin - Action Required Before Implementation
MO-3-10-013D	RHR Pump Suction LPCI Isolation Valves	+ 16.9		Acceptable with DP change.
MO-2-13-039	RCIC Torus Suction Block Valve	+11.9		Acceptable with DP change.

Table 2.2-14 EPU Effects to PBAPS Program Valves (continued)

Valve ID	Valve Function	Maximum Differential Pressure Change, psi	Ambient Temp Change	EPU Effect
MO-2-13-041	RCIC Torus Suction Block Valve	+11.9		Acceptable with DP change.
MO-3-13-039	RCIC Torus Suction Block Valve	+11.9		Acceptable with DP change.
MO-3-13-041	RCIC Torus Suction Block Valve	+11.9		Negative Margin - Action Required Before Implementation
MO-2-13-132	RCIC Turbine Cooling Water Block Valve	+15.9		Acceptable with DP change.
MO-3-13-132	RCIC Turbine Cooling Water Block Valve	+15.9		Medium Margin - Action Recommended
MO-2-13C-4244	RCIC Turbine Exhaust Vacuum Breaker Valve	+11.9		Acceptable with DP change.
MO-3-13C-5244	RCIC Turbine Exhaust Vacuum Breaker Valve	+11.9		Acceptable with DP change.
MO-2-14-007A	Core Spray Loop Pump Suction	+11.9		Negative Margin - Action Required Before Implementation
MO-2-14-007B	Core Spray Loop Pump Suction	+11.9		Low Margin - Action Recommended
MO-2-14-007C	Core Spray Loop Pump Suction	+11.9		Acceptable with DP change.
MO-2-14-007D	Core Spray Loop Pump Suction	+11.9		Negative Margin - Action Required Before Implementation
MO-3-14-007A	Core Spray Loop Pump Suction	+11.9		Low Margin - Action Required

Table 2.2-14 EPU Effects to PBAPS Program Valves (continued)

Valve ID	Valve Function	Maximum Differential Pressure Change, psi	Ambient Temp Change	EPU Effect
MO-3-14-007B	Core Spray Loop Pump Suction	+11.9		Negative Margin - Action Required Before Implementation
MO-3-14-007C	Core Spray Loop Pump Suction	+11.9		Low Margin - Action Required
MO-3-14-007D	Core Spray Loop Pump Suction	+11.9		Medium Margin - Action Recommended
MO-2-14-070	Torus Water Filter Pump Isolation	+11.9		Acceptable with DP change.
MO-2-14-071	Torus Water Filter Pump Isolation	+11.9		Acceptable with DP change.
MO-3-14-070	Torus Water Filter Pump Isolation	+11.9		Acceptable with DP change.
MO-3-14-071	Torus Water Filter Pump Isolation	+11.9		Acceptable with DP change.
MO-2-23-057	HPCI Torus Suction Block Valve	+11.9		Acceptable with DP change.
MO-3-23-057	HPCI Torus Suction Block Valve	+11.9		Acceptable with DP change.
MO-2-23-058	HPCI Torus Suction Block Valve	+11.9		Acceptable with DP change.
MO-3-23-058	HPCI Torus Suction Block Valve	+11.9		Acceptable with DP change.
MO-2-23B-424	HPCI Turbine Exhaust Vacuum Breaker Valve	+11.9		Acceptable with DP change.
MO-3-23B-5245	HPCI Turbine Exhaust Vacuum Breaker Valve	+11.9		Acceptable with DP change.
MO-2-35-2373	Reactor Building Closed Cooling Water (35) - Seal and Motor Oil Coolers Supply and Return	+5.0		Acceptable with DP change.

Table 2.2-14 EPU Effects to PBAPS Program Valves (continued)

Valve ID	Valve Function	Maximum Differential Pressure Change, psi	Ambient Temp Change	EPU Effect
MO-2-35-2374	Reactor Building Closed Cooling Water (35) - Seal and Motor Oil Coolers Supply and Return	+5.0		Acceptable with DP change.
MO-3-35-3373	Reactor Building Closed Cooling Water (35) - Seal and Motor Oil Coolers Supply and Return	+5.0		Acceptable with DP change.
MO-3-35-3374	Reactor Building Closed Cooling Water (35) - Seal and Motor Oil Coolers Supply and Return	+5.0		Acceptable with DP change.
MO-2-44A-2200A	Drywell Cooling (44) - Drywell Cooler Inlet Isolation Valves	+4.0		Acceptable with DP change.
MO-2-44A-2200B	Drywell Cooling (44) - Drywell Cooler Inlet Isolation Valves	+4.0		Acceptable with DP change.
MO-2-44A-2201A	Drywell Cooling (44) - Drywell Cooler Inlet Isolation Valves	+4.0		Acceptable with DP change.
MO-2-44A-2201B	Drywell Cooling (44) - Drywell Cooler Inlet Isolation Valves	+4.0		Medium Margin - Action Recommended
MO-3-44A-3200A	Drywell Cooling (44) - Drywell Cooler Inlet Isolation Valves	+4.0		Acceptable with DP change.
MO-3-44A-3200B	Drywell Cooling (44) - Drywell Cooler Inlet Isolation Valves	+4.0		Acceptable with DP change.
MO-3-44A-3201A	Drywell Cooling (44) - Drywell Cooler Inlet Isolation Valves	+4.0		Medium Margin - Action Recommended
MO-3-44A-3201B	Drywell Cooling (44) - Drywell Cooler Inlet Isolation Valves	+4.0		Acceptable with DP change.

2.3 Electrical Engineering

2.3.1 Environmental Qualification of Electrical Equipment

Regulatory Evaluation

EQ of electrical equipment involves demonstrating the equipment is capable of performing its safety function under significant environmental stresses, which could result from DBAs. The review focused on the effects of the proposed EPU on the environmental conditions that the electrical equipment will be exposed to during normal operation, AOOs, and accidents. The review was conducted to ensure the electrical equipment will continue to be capable of performing its safety functions following implementation of the proposed EPU. The regulatory acceptance criteria for EQ of electrical equipment are based on 10 CFR 50.49, which sets forth requirements for the qualification of electrical equipment important to safety that, is located in a harsh environment.

Peach Bottom Current Licensing Basis

The PBAPS program for EQ of electrical equipment is described in PBAPS UFSAR Section 7.19, "Class 1E Equipment Environmental Qualification."

In addition to the evaluations described in the PBAPS UFSAR, PBAPS's EQ of electrical equipment was evaluated for license renewal. Systems and system component materials of construction, operating history, and programs used to manage aging effects were evaluated for plant license renewal and documented in the "Safety Evaluation Report Related to the License Renewal of Peach Bottom Atomic Power Station, Units 2 and 3," NUREG-1769, dated March 2003 (Reference 10). The EQ of electrical equipment for license renewal is discussed in NUREG-1769, Sections 2.1.2.1.1, 2.3.2, 3.2.1.2.1, 3.6, and 4.4.

Technical Evaluation

NEDC-33004P-A, Revision 4, "Constant Pressure Power Uprate," Class III, July 2003 (also referred to as CLTR) was approved by the NRC as an acceptable method for evaluating the effects of CPPUs. Section 10.3.1 of the CLTR addresses the effect of CPPU on the EQ of Electrical Equipment. The results of this evaluation are described below.

PBAPS meets all CLTR dispositions. The topics addressed in this evaluation are:

Topic	CLTR Disposition	PBAPS Result
Electrical Equipment	[[ ]]	Meets CLTR Disposition

The CLTR states that the increase in power level increases the radiation levels experienced by equipment during normal operation and accident conditions. [[

]]

All electrical equipment in the EQ Program was evaluated by developing a list of components that are identified as being in the electrical EQ program.

For areas impacted by EPU operating conditions, associated safety-related electrical equipment was reviewed consistent with the requirements of 10 CFR 50.49 and NRC RG 1.89 to assure the existing qualification for the normal and accident conditions expected in the area where the devices are located remains adequate. Review focused on the impact of environmental changes due to EPU. The 10 CFR 50.49 acceptance criteria were used in making this determination. Margin evaluation complies with the recommendations of IEEE 323-1974 or is qualitatively justified based on separate data that establish material capabilities.

The EQ Program equipment qualification basis was evaluated using the changes to existing normal and accident radiation doses expected when operating at the EPU increased reactor power level. The normal and post-LOCA radiation dose value changes are based on a scaling factor and apply to plant areas inside and outside primary containment. The multiplying factor is for gamma and beta contributors applied over the post-accident time intervals up to 101 days. Once the impact of post-EPU radiation dose value was determined, all equipment was evaluated and found to remain fully qualified for post-EPU parameters with respect to radiation. This includes equipment with sufficient life to demonstrate radiation qualification through the end of plant life (60 years) or with designated qualified life less than 60 years. Limited life components are addressed within the PBAPS EQ program as warranted. There is no reduction in qualified life due to EPU implementation.

EQ file updates will be completed as required by 10 CFR 50.49 prior to EPU implementation per Exelon procedure CC-AA-203, "Environmental Qualification Program." Post-EPU EQ compliance is not contingent on any plant modifications, replacement of equipment, or other compensatory measure.

Inside Containment

EQ for safety-related electrical equipment located inside the containment is based on MSLB and/or DBLOCA conditions and their resultant temperature, pressure, humidity, and radiation consequences, and includes the environments expected to exist during normal plant operation. Normal temperatures are essentially unchanged and remain bounded by the normal temperatures used in the EQ analyses. The post-accident EQ temperature profile, which is a composite that bounds MSLB and LOCA conditions, was revised due to EPU changes. These changes occurred in the first 3 hours of the 101-day profile, necessitating the evaluation of the new requirements based on the series of individual component type tests available to the EQ Program. However, the revised EQ accident temperatures were determined not to adversely affect the qualification of safety-related electrical equipment. The current DW EQ temperature profile and revised post-EPU EQ temperature profile are shown in Figure 2.3-1.

[[

]] The total integrated doses (normal plus accident) for EPU conditions were determined not to adversely affect qualification of the equipment located inside containment at the time of EPU implementation.

Outside Containment

Accident temperature, pressure, and humidity environments were used for qualification of equipment outside containment resulting from an MSLB, or other HELBs, whichever is limiting for each plant area. There is no change to the accident environments of rooms with EQ equipment as a result of EPU implementation. The normal temperature, pressure, and humidity conditions do not change as a result of EPU.

The current radiation levels under normal plant conditions were conservatively evaluated to increase in proportion to the increase in reactor thermal power. The qualification basis for the EQ program equipment was evaluated based on the revised EPU normal and accident radiation dose values. This evaluation used environmental area dose values and equipment-specific dose values where necessary. As stated above, all EQ equipment was evaluated and found to remain fully qualified for post-EPU parameters with respect to radiation.

The environmental qualification of EQ equipment was not impacted by EPU changes. Therefore, the EQ of electrical equipment meets all CLTR dispositions.

Conclusion

Exelon has reviewed the effects of the proposed EPU on the EQ of electrical equipment and concludes the effects of the proposed EPU on the environmental conditions and the qualification of electrical equipment have been adequately addressed. Exelon further concludes the electrical equipment will continue to meet the relevant requirements of 10 CFR 50.49 following implementation of the proposed EPU. Therefore, Exelon finds the proposed EPU acceptable with respect to the EQ of electrical equipment.

2.3.2 Offsite Power System

Regulatory Evaluation

The offsite power system includes two or more physically independent circuits capable of operating independently of the onsite standby power sources. The review covered the descriptive information, analyses, and referenced documents for the offsite power system and the stability studies for the electrical transmission grid. The review focused on whether the loss of the nuclear unit, the largest operating unit on the grid, or the most critical transmission line will result in the loss of offsite power (LOOP) to the plant following implementation of the proposed EPU. The regulatory acceptance criteria for offsite power systems are based on GDC-17.

Peach Bottom Current Licensing Basis

Current GDC-17 listed in the Regulatory Evaluation above is applicable to PBAPS as described in UFSAR Sections 8.4.8 and 8.5.6, "Compliance with Safety Guides."

The PBAPS offsite power system is described in PBAPS UFSAR Section 8.3, "Transmission System."

PBAPS's Offsite Power System was evaluated for license renewal. Systems and system component materials of construction, operating history, and programs used to manage aging effects were evaluated for plant license renewal and documented in the "Safety Evaluation Report Related to the License Renewal of Peach Bottom Atomic Power Station, Units 2 and 3," NUREG-1769, dated March 2003 (Reference 10). The offsite power system is discussed in NUREG-1769, Sections 2.4.6, 2.5, and 3.6.3.2.1.

Technical Evaluation

NEDC-33004P-A, Revision 4, "Constant Pressure Power Uprate," Class III, July 2003 (also referred to as CLTR) was approved by the NRC as an acceptable method for evaluating the effects of CPPUs. Section 6.1 of the CLTR addresses the effect of CPPU on the Alternating Current (AC) power system. The results of this evaluation are described below.

PBAPS meets all CLTR dispositions. The topics addressed in this evaluation are:

Topic	CLTR Disposition	PBAPS Result
AC power (degraded voltage)	[[	Meets CLTR Disposition
AC power (normal operation)	]]	Meets CLTR Disposition

2.3.2.1 AC Power (Degraded Voltage)

As explicitly stated in Section 6.1 of the CLTR, the increase in thermal power translates to an increased electrical output from the station. For the off-site power supply, the equipment is typically adequate for operation with the uprated electrical output. Changes in electrical requirements to support normal plant operation are not safety-related. The increased power from the generator will have no adverse effect on the grid stability/reliability.

The PBAPS main generator is connected to the main generator step-up transformers. The 500kV switchyards consists of the buswork, 500kV disconnect switches and the associated control and protection systems. There are three independent sources of offsite power for startup and shutdown of the station:

- The PBAPS tap on the Cooper-Nottingham (220-08) 230kV Line supplies the 230/13 kV regulating transformer (startup and emergency auxiliary transformer No. 2) at the station. (referred to as 2SU)
- At the PBAPS 500kV North Substation, 13 kV from the tertiary winding on the No. 1 PBAPS 500/220 kV auto-transformer supplies the 13/13 kV regulating transformer

(startup and emergency auxiliary regulating transformer No. 3) which connects to the 13 kV switchgear at the station. (referred to as 3SU)

- At the PBAPS 230kV North Substation, the Newlinville-Peach Bottom (220-34) 230kV line supplies the 230/13 kV regulating transformer (startup transformer No. 343) which connects to the 13 kV switchgear at the station. (referred to as 343SU)

The protective relaying schemes are designed to protect the equipment from electrical faults. Electrical ratings and margins associated with major components of the offsite power system are given in Table 2.3-2. No relay changes were noted in the PJM or PECO studies. Final relay settings are coordinated through the design / modification process when the main generator upgrade is completed.

A grid analysis has been performed, considering the increase in electrical output, to demonstrate conformance to GDC 17 (10 CFR 50 Appendix A). Details of these studies are provided in EPU LAR Attachment 11 "Grid Stability Evaluation Summary." The analysis has determined that the EPU will not require transmission system upgrades and will not adversely impact the bulk power transmission system power flow (thermal ratings and voltage), stability, short circuit duty or power transfer levels. Grid events analyzed included loss of the largest generator, loss of Unit 2 and Unit 3 at PBAPS, and loss of the most critical transmission line with the unit operating at full power uprate capacity. For all cases studied, transient stability is maintained with all oscillations stabilized in less than ten seconds. Also, the voltage levels returned to normal for all cases following the fault clearance. Reactive power will be maintained within acceptable limits analyzed in the grid studies. Pre-event line outages were also considered. PBAPS offsite power and voltages resulting from the loss of a critical transmission line or loss of PBAPS generation are adequate to operate loads required for safe shutdown and will preclude the inadvertent separation from the offsite supply. Therefore, the offsite power at degraded voltage meets all CLTR dispositions.

2.3.2.2 AC Power (Normal Operation)

As explicitly stated in Section 6.1 of the CLTR, the increase in thermal power translates to an increased electrical output from the station. For the off-site power supply, other than the main generator, the equipment is typically adequate for operation with the uprated electrical output. Changes in electrical requirements to support normal plant operation are not safety-related. The existing off-site electrical equipment was determined to not need reinforcements for operation with the uprated electrical output and increased electrical loading. The increased power from the generator will have no adverse effect on the grid stability/reliability.

The review of grid studies concluded the following:

- Grid studies have been performed, considering the increase in electrical output, to demonstrate conformance to GDC 17 (10 CFR 50 Appendix A). Details of these studies are provided in the EPU LAR Attachment 11. PBAPS offsite power voltages resulting from loss of a critical transmission line or loss of PBAPS generation are adequate to

operate loads required for safe shutdown and will preclude the inadvertent separation from the offsite supply.

- There is no adverse impact on the transmission system.
- All reactive power requirements are met.
- The Generator Step-up (GSU) transformer rating is the same as the full EPU output of the generator, the generator can be kept at full normal power even if all the house loads need to be transferred from the Unit Auxiliary Transformer (UAT) to the Start-up Transformer.
- The 500kV Switchyard components (i.e. bus, breakers, switches, current transformers, and lines) are adequate for increased generator output associated with EPU.

Both Unit 2 and Unit 3 GSU transformers have been replaced. The maximum rating of the rewound generator is 1530 MVA, which is the same as the rating of 1530 MVA @ 65°C for the generator step-up transformer. The amount of power the generator sends through the GSU is equal to the generator output minus the house loads (that are tapped off the iso-phase bus through the UAT before going through the GSU) and the transformer losses. As a result, under normal operations the transformers have substantial margin.

The isolated phase bus duct is being modified to increase its continuous current rating to provide for operation at EPU output.

The existing protective relay settings for the main generator will be reviewed and changed if necessary to assure they provide for reliable operation due to the increased EPU power output. The North and South 500kV substation equipment does not require upgrades to be adequate for operation with the EPU electrical output. The review included the protective relaying for the main generator, 22 to 500kV step-up transformers, 500kV transmission line and the North and South 500kV Substation relays. Therefore, other than those protective relays associated with the uprated main generator, the relay settings are unaffected by operation at EPU conditions and offsite power during normal operation and meets all CLTR dispositions.

Conclusion

Exelon has reviewed the assessment of the effects of the proposed EPU on the offsite power system and concludes the offsite power system will continue to meet the requirements of the current licensing basis following implementation of the proposed EPU. Adequate physical and electrical separation exists and the offsite power system has the capacity and capability to supply power to safety loads and other required equipment. Exelon further concludes the impact of the proposed EPU will have no adverse impact on grid stability. Therefore, Exelon finds the proposed EPU acceptable with respect to the offsite power system.

2.3.3 AC Onsite Power System

Regulatory Evaluation

The alternating current (AC) onsite power system includes those standby power sources, distribution systems, and auxiliary supporting systems provided to supply power to safety-related equipment. The review covered the descriptive information, analyses, and referenced documents for the AC onsite power system. The regulatory acceptance criteria for the AC onsite power system are based on GDC-17, insofar as it requires the system to have the capacity and capability to perform its intended functions during AOOs and accident conditions.

Peach Bottom Current Licensing Basis

Current GDC-17 listed in the Regulatory Evaluation above is applicable to PBAPS as described in UFSAR Sections 8.4.8 and 8.5.6, "Compliance with Safety Guides."

The PBAPS onsite AC power system is described in PBAPS UFSAR Sections 8.4, "Auxiliary Power System," 8.5, "Standby AC Power Supply and Distribution," and 8.6, "120V AC Power System."

PBAPS's AC onsite power system was evaluated for license renewal. Systems and system component materials of construction, operating history, and programs used to manage aging effects were evaluated for plant license renewal and documented in the "Safety Evaluation Report Related to the License Renewal of Peach Bottom Atomic Power Station, Units 2 and 3," NUREG-1769, dated March 2003 (Reference 10). The AC onsite power system was determined to be within the scope of license renewal, and the components subject to age management review are evaluated on a plant-wide basis as commodities. The electrical commodity groups are described in NUREG-1769, Section 2.5, and aging management for electrical commodities is described in NUREG-1769, Section 3.6. The onsite power supplies are described in NUREG-1769, Section 2.3.3.16. Aging management for onsite power supplies is documented in NUREG-1769, Section 3.3.16.

Technical Evaluation

NEDC-33004P-A, Revision 4, "Constant Pressure Power Uprate," Class III, July 2003 (also referred to as CLTR) was approved by the NRC as an acceptable method for evaluating the effects of CPPUs. Section 6.1 of the CLTR addresses the effect of CPPU on the AC Onsite Power System.

The PBAPS AC on-site power distribution system consists of transformers, buses, and switchgear. AC power to the distribution system is provided from the transmission system, Transmission Switchyard, and from onsite Diesel Generators.

The AC onsite power system consists of equipment and systems required to provide AC power to and service loads under all conditions of plant operation. This includes 13.8kV transformers, 13.8kV switchgears, 4.16kV switchgears, 480V load centers and motor control centers, 208Y/120V distribution panels, uninterruptable power supply systems, and standby diesel generators.

The AC onsite power distribution system loads were reviewed under both normal and abnormal operating scenarios. In both cases, loads are computed based on equipment nameplate data or brake horsepower (BHP), with conservative demand factors applied. These loads are used as inputs for the computation of load, voltage drop and short circuit current values which were modeled in a commercially available electrical analysis software package. The significant changes in electrical load demand are associated with increasing the size of the condensate pumps to restore hydraulic margin. The PBAPS review covered the AC power components with respect to their functional performance as affected by various configurations and loading conditions including full operation and unit trip with LOCA. The PBAPS review focused on the additional electric load that would result from the proposed EPU. Sufficient margin is available so that no electrical distribution system modifications are required.

Due to the RHR heat exchanger cross-tie modification there are changes to the emergency diesel generator (EDG) loading. Fuel oil requirements are evaluated in Section 2.5.6.1.

PBAPS meets all CLTR dispositions. The topics addressed in this evaluation are:

Topic	CLTR Disposition	PBAPS Result
AC power (degraded voltage)	[[	Meets CLTR Disposition
AC power (normal operation)	]]	Meets CLTR Disposition

2.3.3.1 AC Onsite Power (Degraded Voltage)

As explicitly stated in Section 6.1 of the CLTR, the increase in thermal power translates to an increased electrical output from the station.

Operation at the EPU power level is achieved in both normal and emergency conditions by operating equipment at or below the nameplate ratings. Table 2.3-3 provides a summary of the loading changes to the onsite power analysis model due to EPU operation.

Exelon intends to pursue condensate pump upgrades to deliver higher head, which will improve operating margins. The larger condensate pumps (5000 horsepower maximum) do not change the conclusions of the degraded voltage analysis. The analysis encompasses the safety-related 4.16 kV buses and is independent of voltage profiles for the 13.8 kV and BOP buses.

Therefore, AC onsite power at degraded voltage meets all CLTR dispositions.

2.3.3.2 AC Onsite Power (Normal Operation)

As explicitly stated in Section 6.1 of the CLTR, the increase in thermal power translates to an increased electrical output from the station.

The existing protective relay settings are adequate; however, detailed design of the replacement condensate pumps will determine the potential change in relay settings (if needed). Selective coordination is maintained between the pump motor breakers and the 13.2 kV and 4.16 kV switchgear main feeder breakers. The existing protective relay settings are based on pump motor nameplate ratings. Except for the condensate pump motors no other motors are being replaced. The existing protective relay settings for pump motors are based on the motor's nameplate rating. The proposed loading of the buses with the larger condensate pumps was evaluated and determined to be acceptable with retained margin. Detailed design of the replacement condensate pumps will address the revised relay settings to maintain selective coordination and adequate cable sizing.

The analytical electrical system computer model developed for PBAPS updated the main power transformer size to reflect the recent change of main power transformers and the proposed changes to the main generators and condensate pumps. Potential design considerations for the condensate pump motors were analyzed in detail to ensure that the Voltage Regulation study acceptance criteria are still met.

Load flow, voltage drop and short circuit current evaluations were performed to verify the adequacy of the AC on-site power system for the proposed changes. Analyzed EPU BHP loads as discussed above are within the electrical distribution equipment capabilities (i.e., service transformers, BOP transformers, bus ducts, etc.). The running and starting voltages for motors are within the acceptable values.

Therefore, AC onsite power during normal operation meets all CLTR dispositions.

Conclusion

Exelon has reviewed the effects of the proposed EPU on the AC onsite power system and concludes the effects of the proposed EPU on the system's functional design have been adequately evaluated. Exelon further concludes the AC onsite power system will continue to meet the requirements of the current licensing basis, following implementation of the proposed EPU. Therefore, Exelon finds the proposed EPU acceptable with respect to the AC onsite power system.

2.3.4 DC Onsite Power System

Regulatory Evaluation

The Direct Current (DC) onsite power system includes the DC power sources and their distribution and auxiliary supporting systems that are provided to supply motive or control power to safety-related equipment. The review covered the information, analyses, and referenced documents for the DC onsite power system. The regulatory acceptance criteria are based on GDC-17, insofar as it requires the system to have the capacity and capability to perform its intended functions during AOOs and accident conditions.

Peach Bottom Current Licensing Basis

Current GDC-17 listed in the Regulatory Evaluation above is applicable to PBAPS as described in UFSAR Sections 8.4.8 and 8.5.6, "Compliance with Safety Guides."

The PBAPS DC onsite power system is described in PBAPS UFSAR Section 8.7, "125/250 VDC Power Supplies and Distribution," and Section 8.8 "24 VDC Power Supply and Distribution."

PBAPS's DC onsite power system was evaluated for license renewal. Systems and system component materials of construction, operating history, and programs used to manage aging effects were evaluated for plant license renewal and documented in the "Safety Evaluation Report Related to the License Renewal of Peach Bottom Atomic Power Station, Units 2 and 3," NUREG-1769, dated March 2003 (Reference 10). The DC onsite power system was determined to be within the scope of license renewal, and the components subject to age management review are evaluated on a plant-wide basis as commodities. The electrical commodity groups are described in NUREG-1769, Section 2.5, and aging management for electrical commodities is described in NUREG-1769, Section 3.6.

Technical Evaluation

NEDC-33004P-A, Revision 4, "Constant Pressure Power Uprate," Class III, July 2003 (also referred to as CLTR) was approved by the NRC as an acceptable method for evaluating the effects of CPPUs. Section 6.2 of the CLTR addresses the effect of CPPU on DC Power. The results of this evaluation are described below.

The PBAPS DC power distribution system provides control and motive power for various systems/components within the plant. The DC power loading requirements in the UFSAR were reviewed and no reactor power dependent loads were identified. The current large break LOCA/LOOP analysis scenario includes the closing of a single HPSW breaker. However, due to EPU considerations an additional HPSW breaker is required to close. The closing of the second 4.16kV HPSW breaker requires the momentary energization of the close coil and spring charging motor. The results of the battery sizing calculation show that the existing batteries will have adequate voltage at the end of the duty cycle with an additional HPSW 4.16kV breaker closing. It also shows all required DC devices within their design voltage range.

PBAPS meets all CLTR dispositions. The topics addressed in this evaluation are:

Topic	CLTR Disposition	PBAPS Result
DC power requirements	[[ ]]	Meets CLTR Disposition

As stated in Section 6.2 of the CLTR, [[
]]

The DC power loading requirements in the UFSAR were reviewed and no reactor power dependent loads were identified in the ECCS systems and the associated pumps occurring with EPU. The DC loads consist primarily of emergency oil pumps, control power for switchgear and control power for valve control. These DC loads are not affected by EPU and there are no other Class 1E DC Power load changes required for EPU implementation.

The only EPU effect to the DC system is the operation of the HPSW motor circuit breaker's spring charging motor, being operated to support the RHR heat exchanger cross-tie modification. The loading of this spring charging motor has been evaluated and it was determined that the DC system is adequate.

Other EPU affected pumps such as the condensate pumps and the HPSW pumps are operated with AC power and have no effect on the DC system. Therefore this analysis concludes that the DC power system is adequate to support the EPU power increase.

Conclusion

Exelon has reviewed the assessment of the effects of the proposed EPU on the DC onsite power system and concludes the effects of the proposed EPU on the system's functional design have been adequately evaluated. Exelon further concludes the DC onsite power system will continue to meet the requirements of the current licensing basis following implementation of the proposed EPU. Adequate physical and electrical separation exists and the system has the capacity and capability to supply power to all safety loads and other required equipment. Therefore, Exelon finds the proposed EPU acceptable with respect to the DC onsite power system.

2.3.5 Station Blackout

Regulatory Evaluation

The term "Station Blackout" refers to a complete loss of AC electric power to the essential and nonessential switchgear buses in a nuclear power plant. SBO involves the LOOP concurrent with a turbine trip and failure of the onsite emergency AC power system. SBO does not include the loss of available AC power to buses fed by station batteries through inverters or the loss of power from "alternate AC sources" (AACS). The review focused on the impact of the proposed EPU on the plant's ability to cope with and recover from an SBO event for the period of time established in the plant's licensing basis. The regulatory acceptance criteria for SBO are based on 10 CFR 50.63.

Peach Bottom Current Licensing Basis

The licensing basis for SBO is described in PBAPS UFSAR Section 8.3.2.2, "Station Blackout," 8.4, "Auxiliary Power Systems," and Appendix Q, "License Renewal Aging Management UFSAR Supplement." Also reference the NRC's SER titled "Station Blackout Supplemental Safety Evaluation, Peach Bottom Atomic Power Station, Units 2 and 3", dated October 23, 1992.

SBO coping equipment was evaluated for license renewal. Systems and system component materials of construction, operating history, and programs used to manage aging effects were evaluated for plant license renewal and documented in the "Safety Evaluation Report Related to

the License Renewal of Peach Bottom Atomic Power Station, Units 2 and 3," NUREG-1769, dated March 2003 (Reference 10). SBO is discussed in NUREG-1769, Section 2.4.6. The SBO coping equipment was determined to be within the scope of license renewal, and the components subject to age management review are evaluated on a plant-wide basis as commodities. The electrical commodity groups are described in NUREG-1769, Section 2.5, and aging management for electrical commodities is described in NUREG-1769, Section 3.6.

Technical Evaluation

NEDC-33004P-A, Revision 4, "Constant Pressure Power Uprate," Class III, July 2003 (also referred to as CLTR) was approved by the NRC as an acceptable method for evaluating the effects of CPPUs. Section 9.3.2 of the CLTR addresses the effect of CPPU on SBO. The results of this evaluation are described below.

PBAPS meets all CLTR dispositions. The topic addressed in this evaluation is:

Topic	CLTR Disposition	PBAPS Result
Station Blackout	[[ ]]	Meets CLTR Disposition

The CLTR states that the plant responses to and coping abilities for an SBO event are affected slightly by operation at the power uprate level, due to the increase in the decay heat.

SBO was re-evaluated using the guidelines of NUMARC 87-00, "Guidelines and Technical Bases for NUMARC Initiatives Addressing Station Blackout at Light Water Reactors" (Reference 48), and RG 1.155, Station Blackout (Reference 49).

The major characteristics that affect the ability to cope with a SBO event are identified in NUMARC 87-00 Revision 1 as:

1. Condensate inventory for decay heat removal
2. Class 1E battery capacity
3. Compressed gas capacity
4. Effects of loss of ventilation
5. Containment isolation

By satisfying the criteria used in assessing the above characteristics, the plant is able to show satisfactory response to an SBO event.

NUMARC 87-00 Revision 1 (Section 7) provides two methods for conducting the assessment. The second method, the Alternate AC Approach, is used in the PBAPS SBO assessment.

The Alternate AC Approach is the method for calculating the coping period where the plant uses equipment that is capable of being electrically isolated from the preferred off-site and emergency on-site AC power sources.

The eight-hour coping duration criteria for Alternate AC Approach plants applies to PBAPS. Thus, PBAPS must meet the SBO requirements for at least eight hours.

Condensate Inventory for Decay Heat Removal

Analyses have shown that the PBAPS condensate inventory is adequate to meet the SBO coping requirement for EPU conditions. The current CST inventory reserve (103,560 gallons) for RCIC and HPCI use ensures that adequate water volume is available to remove decay heat, depressurize the reactor and maintain reactor vessel level above the top of active fuel (TAF) (approximately 94,570 gallons required) during the coping period.

Class 1E Battery Capacity

Evaluation of the PBAPS Class 1E Battery Capacity has shown that PBAPS has adequate battery capacity to support decay heat removal during a SBO for the required coping duration. The battery capacity remains adequate to support required coping equipment operation after EPU.

Compressed Gas Capacity

PBAPS meets the requirement for compressed gas capacity. An evaluation has shown that the PBAPS air operated SRVs required for decay heat removal have sufficient compressed gas capacity for the required automatic and manual operation during the SBO event for EPU conditions. Sufficient capacity remains to perform emergency RPV depressurization in case it is required. Adequate compressed gas capacity exists to support the SRV actuations because the maximum number of SRV valve operations is less than the capacity of the pneumatic supply.

Effects of Loss of Ventilation

The effect of loss of ventilation in dominant areas of concern containing equipment necessary to achieve and maintain safe shutdown during an SBO is evaluated for SBO.

Areas containing equipment necessary to cope with an SBO event were evaluated for the effect of loss of ventilation due to an SBO. The evaluation shows that equipment operability is maintained because the SBO environment is milder than the existing design and qualification bases.

These areas for PBAPS included:

1. Control Room (CR) and Cable Spreading Room
2. Switchgear Room / Inverter Room
3. Drywell
4. RCIC Room
5. HPCI Room

Containment Isolation

Containment isolation capability is not adversely affected by the SBO event for EPU as the SBO environment conditions do not change significantly after EPU and containment isolation for SBO is adequate.

The SBO sequence of events is given in Table 2.3-4. The plant response to and coping capabilities for an SBO event are affected slightly by operation at EPU due to the increase in the initial power level and decay heat. The decay heat is based upon the nominal ANSI/ANS 5.1-1979 standard with initial decay heat for GNF2 fuel at 100% equilibrium and the metal water reaction (MWR) is not modeled, as fuel uncovery is not expected. There are no changes to the systems and equipment used to respond to an SBO event, nor is the required coping time of eight hours changed.

The battery capacity remains adequate to support RCIC and HPCI operation after EPU. At 1 hour into the event Alternate AC is provided and 1E power is available for the SBO coping period.

Adequate compressed gas capacity exists to support the SRV actuations.

The SBO evaluation at EPU conditions shows a need to credit additional CST inventory (<1% over CLTP) for RCIC and HPCI use. This ensures that adequate water volume is available to remove decay heat, depressurize the reactor, and maintain reactor vessel level above the TAF during SBO. The PBAPS EPU SBO total CST inventory required is approximately 94,570 gallons, which is well within the current CST inventory reserve of 103,560 gallons.

The SBO event calculations for CLTP and EPU conditions are performed using the NRC-approved SHEX Computer Program and nominal ANSI/ANS 5.1-1979 Decay Heat Source Term at 100% rated power for Containment Long-Term Pressure and Temperature Analysis (Reference 8).

The key parameters for the SBO calculations for containment response at CLTP, EPU conditions, and the design limits are provided in the following table.

Key Containment Parameters Comparison

Parameter	Units	CLTP	EPU	Design Limit
Peak Drywell Pressure	psia	39.2	40.2	<70.7
Peak SP (Torus) Temperature	°F	187.0	198.0	<281

The containment response comparison is based on a scenario that provides conservative containment parameters as compared to the SBO procedures that are used for reactor pressure control.

Based on the above evaluations, PBAPS continues to meet the requirements of 10 CFR 50.63 after the EPU. Therefore, SBO meets all CLTR dispositions.

Conclusion

Exelon has reviewed the assessment of the effects of the proposed EPU on the plant's ability to cope with and recover from an SBO event for the period of time established in the plant's licensing basis. Exelon concludes: (1) the effects of the proposed EPU on SBO have been adequately evaluated; and (2) the plant will continue to meet the requirements of 10 CFR 50.63 following implementation of the proposed EPU. Therefore, Exelon finds the proposed EPU acceptable with respect to SBO.

Table 2.3-1 Normal Maximum and Total Radiation Requirements for Rooms at PBAPS

			Normal Operating			DBA		Total		
			Integrated Dose			Integrated Dose		Integrated Dose		
Area			40 year	60 year	60yr+EPU	LOCA	LOCA+EPU	40 year	60 year	60yr+EPU
Unit 2	Unit 3	Description	(RADS)	(RADS)	(RADS)	(RADS)	(RADS)	(RADS)	(RADS)	(RADS)
PRIMARY CONTAINMENT										
		SUPPRESSION CHAMBER (Note 2)	5.63E+03	8.45E+03	9.65E+03	3.30E+07	3.77E+07	3.30E+07	3.30E+07	3.77E+07
201	246	CRD AREA (Note 2)	2.52E+06	3.78E+06	4.32E+06	4.69E+07	5.36E+07	4.94E+07	5.07E+07	5.79E+07
202, 402	247, 443	DRYWELL (Note 2)	8.36E+07	1.25E+08	1.43E+08	6.20E+07	7.08E+07	1.46E+08	1.87E+08	2.14E+08
REACTOR BUILDING										
1	37	TORUS COMPARTMENT	5.63E+03	8.45E+03	9.65E+03	3.40E+07	3.88E+07	3.40E+07	3.40E+07	3.88E+07
2, 3, 4, 5	38, 39, 40, 41	RHR PUMP ROOMS EL 91'6"	5.45E+05	8.18E+05	9.34E+05	3.40E+07	3.88E+07	3.45E+07	3.48E+07	3.98E+07
101, 102, 103, 104	156, 157, 158, 159	RHR PUMP ROOMS EL 116'	5.45E+05	8.18E+05	9.34E+05	3.40E+07	3.88E+07	3.45E+07	3.48E+07	3.98E+07
6	48	HPCI PUMP ROOM	9.05E+05	1.36E+06	1.55E+06	1.24E+07	1.42E+07	1.33E+07	1.38E+07	1.57E+07
7	47	RCIC PUMP ROOM	5.18E+05	7.77E+05	8.88E+05	6.43E+06	7.34E+06	6.95E+06	7.21E+06	8.23E+06
8	46	REACTOR SUMP PUMP ROOM	5.63E+03	8.45E+03	9.65E+03	3.08E+06	3.52E+06	3.09E+06	3.09E+06	3.53E+06
9, 10, 11, 12	42, 43, 44, 45	CORE SPRAY PUMP ROOMS	9.39E+02	1.41E+03	1.61E+03	3.08E+06	3.52E+06	3.08E+06	3.08E+06	3.52E+06

Table 2.3-1 Normal Maximum and Total Radiation Requirements for Rooms at PBAPS (Continued)

			Normal Operating			DBA		Total		
			Integrated Dose			Integrated Dose		Integrated Dose		
Area			40 year	60 year	60yr+EPU	LOCA	LOCA+EPU	40 year	60 year	60yr+EPU
Unit 2	Unit 3	Description	(RADS)	(RADS)	(RADS)	(RADS)	(RADS)	(RADS)	(RADS)	(RADS)
105	162	COOLING WATER EQUIPMENT ROOM	9.39E+02	1.41E+03	1.61E+03	1.44E+03	1.64E+03	2.38E+03	2.85E+03	3.25E+03
107, 108	160, 161	VACUUM BREAKER AREAS	9.39E+02	1.41E+03	1.61E+03	3.08E+06	3.52E+06	3.08E+06	3.08E+06	3.52E+06
24		STAIRWELL	2.04E+04	3.06E+04	3.50E+04	2.00E+04	2.28E+04	4.04E+04	5.06E+04	5.78E+04
	25	STAIRWELL	4.50E+03	6.75E+03	7.71E+03	7.00E+04	8.00E+04	7.45E+04	7.68E+04	8.77E+04
203, 204	248, 249	ISOLATION VALVE ROOMS	3.75E+04	5.63E+04	6.43E+04	3.40E+07	3.88E+07	3.40E+07	3.41E+07	3.89E+07
205, 212	250, 257	CRD EQUIPMENT AREAS	3.75E+04	5.63E+04	6.42E+04	3.05E+04	3.48E+04	6.79E+04	8.67E+04	9.90E+04
207	253	DRYWELL ACCESS	1.58E+05	2.37E+05	2.71E+05	3.05E+04	3.48E+04	1.89E+05	2.68E+05	3.06E+05
208	254	STEAM TUNNEL	1.44E+06	2.16E+06	2.47E+06	6.43E+06	7.34E+06	7.87E+06	8.59E+06	9.81E+06
209	252	CORRIDOR	9.37E+02	1.41E+03	1.61E+03	2.29E+05	2.62E+05	2.30E+05	2.30E+05	2.63E+05
210	255	NEUTRON MONITORING ROOM	7.39E+07 (Note 1)	1.11E+08 (Note 1)	1.27E+08	3.05E+04	3.48E+04	7.39E+07	1.11E+08	1.27E+08
400	447	RWCU VALVE COMPARTMENT	1.23E+06	1.85E+06	2.11E+06	3.40E+07	3.88E+07	3.52E+07	3.58E+07	4.09E+07
403	444	OPERATING AREA	1.87E+02	2.81E+02	3.20E+02	2.29E+05	2.62E+05	2.29E+05	2.29E+05	2.62E+05
404, 405, 498	445, 446, 499	RWCU PUMP ROOMS	1.23E+06	1.85E+06	2.11E+06	3.05E+04	3.48E+04	1.26E+06	1.88E+06	2.14E+06

Table 2.3-1 Normal Maximum and Total Radiation Requirements for Rooms at PBAPS (Continued)

			Normal Operating			DBA		Total		
			Integrated Dose			Integrated Dose		Integrated Dose		
Area			40 year	60 year	60yr+EPU	LOCA	LOCA+EPU	40 year	60 year	60yr+EPU
Unit 2	Unit 3	Description	(RADS)	(RADS)	(RADS)	(RADS)	(RADS)	(RADS)	(RADS)	(RADS)
407	448	REGENERATIVE HEAT EXCHANGER ROOM	1.26E+06	1.89E+06	2.16E+06	3.05E+04	3.48E+04	1.29E+06	1.92E+06	2.19E+06
408, 409	449, 450	NON-REGENERATIVE HEAT EXCHANGER ROOM	4.31E+05	6.47E+05	7.38E+05	3.05E+04	3.48E+04	4.62E+05	6.77E+05	7.73E+05
410	452	TRANSFER PUMP ROOM	1.35E+06 (Note 1)	2.03E+06 (Note 1)	2.31E+06	3.05E+04	3.48E+04	1.38E+06	2.06E+06	2.35E+06
430	453	BACKWASH RECEIVING TANK	2.16E+08	3.24E+08	3.70E+08	3.05E+04	3.48E+04	2.16E+08	3.24E+08	3.70E+08
472, 473	476, 477	VALVE COMPARTMENTS	1.18E+06	1.77E+06	2.02E+06	2.96E+04	3.38E+04	1.21E+06	1.80E+06	2.06E+06
500, 505	514, 515	HOLDING PUMP COMPARTMENTS	3.38E+05	5.07E+05	5.79E+05	3.05E+04	3.48E+04	3.69E+05	5.38E+05	6.14E+05
501	517	LAYDOWN AREA	9.39E+02	1.41E+03	1.61E+03	3.05E+04	3.48E+04	3.14E+04	3.19E+04	3.64E+04
502	518	NEW FUEL STORAGE	9.39E+02	1.41E+03	1.61E+03	3.05E+04	3.48E+04	3.14E+04	3.19E+04	3.64E+04
504	522	SOURCE STORAGE & CAL	9.39E+02	1.41E+03	1.61E+03	3.05E+04	3.48E+04	3.14E+04	3.19E+04	3.64E+04
506	520	RX BLDG VENTILATION EQUIPMENT	9.39E+02	1.41E+03	1.61E+03	3.05E+04	3.48E+04	3.14E+04	3.19E+04	3.64E+04

Table 2.3-1 Normal Maximum and Total Radiation Requirements for Rooms at PBAPS (Continued)

			Normal Operating			DBA		Total		
			Integrated Dose			Integrated Dose		Integrated Dose		
Area			40 year	60 year	60yr+EPU	LOCA	LOCA+EPU	40 year	60 year	60yr+EPU
Unit 2	Unit 3	Description	(RADS)	(RADS)	(RADS)	(RADS)	(RADS)	(RADS)	(RADS)	(RADS)
507	519	STEAM SEPARATOR & DRIER LAYDOWN AREA	9.39E+02	1.41E+03	1.61E+03	3.05E+04	3.48E+04	3.14E+04	3.19E+04	3.64E+04
508	523	STEAM SEPARATOR & DRIER LAYDOWN AREA	9.39E+02	1.41E+03	1.61E+03	2.29E+05	2.62E+05	2.30E+05	2.30E+05	2.63E+05
509	516	FILTER DEMIN COMPARTMENT	1.99E+08	2.99E+08	3.41E+08	3.05E+04	3.48E+04	1.99E+08	2.99E+08	3.41E+08
510, 511	525, 526	PRE & HEPA FILTER COMPARTMENT	9.97E+03	1.50E+04	1.71E+04	3.05E+04	3.48E+04	4.05E+04	4.55E+04	5.19E+04
529	530	RX BUILDING FAN ROOM	9.39E+02	1.41E+03	1.61E+03	3.05E+04	3.48E+04	3.14E+04	3.19E+04	3.64E+04
601, 603	611, 613	LAYDOWN AREAS	9.39E+02	1.41E+03	1.61E+03	3.05E+04	3.48E+04	3.14E+04	3.19E+04	3.64E+04
604	614	WASHDOWN AREA	3.75E+04	5.63E+04	6.43E+04	3.05E+04	3.48E+04	6.80E+04	8.68E+04	9.91E+04
605	612	SHOWER ROOM	1.87E+02	2.81E+02	3.20E+02	3.05E+04	3.48E+04	3.07E+04	3.08E+04	3.52E+04
RADWASTE BUILDING										
33	33	SGTS EQUIPMENT COMPARTMENT	2.27E+03	3.41E+03	3.89E+03	5.02E+06	5.73E+06	5.02E+06	5.02E+06	5.74E+06
206	258	MG SET ROOM	1.87E+02	2.81E+02	3.20E+02	3.19E+01	3.64E+01	2.19E+02	3.12E+02	3.57E+02

Notes for Table 2.3-1

Note 1 This is a peak dose rate from operation of equipment in the area. The 40/60-year normal operating integrated dose accounts for the frequency of operation of the equipment, rather than 40/60 years at this peak dose rate.

Note 2 Values are provided by ECR00-10796.

Note 3 This is a conservative dose assuming both streaming (Calculated Streaming Radiation, Addendum 1 of Appendix I of NE-164) and "base" (Existing Required Specific Radiation, Addendum 1 of Appendix I of NE-164) dose. When evaluating equipment qualification streaming dose may be subtracted, where appropriate. Pre-EPU LOCA value provided by ECR00-10796.

Note All values are provided from NE-164, except where noted.

Note 60 year dose is 1.5x the 40 year dose.

Note 60 year with EPU dose is 1.1423 x the 60 year dose.

Note The LOCA + EPU dose is 1.1423 x the LOCA dose.

Table 2.3-2 Offsite Electrical Equipment Ratings and Margins

Component	Component Rating (Note 3)	CLTP Duty (Note 3)	CLTP Margin (%)	EPU Duty (Note 3)	EPU Margin (%)
Main Generator (MVA Capability /power factor)	1,530/0.92 U-2 1,530/0.90 U-3 (Note 1)	1,192/0.98 (Note 2)	22.1	1,530/0.92 U-2 1,530/0.90 U-3	0.0
Isolated Phase Bus Duct (Amps)	42,300	33,566	20.6	42,265	0.1
Main Generator Step-Up Transformers (MVA)	1,530	1,192/0.98 (Note 2)	22.1	1,530 (Note 4)	0.0 (Note 7)
Start-up and Emergency Auxiliary Transformers (Max. MVA)	50.0	45.4	9.2	48.3	3.4
Limiting Component - 500kV North Substation PBAPS Transmission Lead Disconnect Switches (Amps)	2,500	1,449 (Note 5)	42.0	1,860 (Note 6)	25.6
Limiting Component - 500 kV South Substation PBAPS Transmission Lead Disconnect Switches (Amps)	2,500	1,449 (Note 5)	42.0	1,860 (Note 6)	25.6

Note 1 Maximum Main Generator Rating is for the rewound generator.

Note 2 Based on maximum historical generator output.

Note 3 Data provided is either common to Unit 2 and Unit 3 or the worst case was selected for simple comparison.

Note 4 Maximum Generator Output.

Note 5 Current is based on historical maximum MVA (1192) and minimum voltage and no house loads which will provide a conservatively high ampere estimate.

Note 6 Current is based on generator maximum MVA (1530) and minimum voltage and no house loads which will provide a conservatively high ampere estimate.

Note 7 The amount of power the generator sends through the GSU is equal to the generator output minus the house loads (that are tapped off the iso-phase bus through the UAT before going through the GSU) and the transformer losses. As a result, under normal operations the transformers have substantial margin.

Table 2.3-3 Electrical Distribution System Load Changes

Motor Description	Nameplate HP	Required BHP		Analyzed BHP	
		CLTP	EPU	CLTP	EPU
Condensate Pump	4500	4012	4183	4500	5000

Table 2.3-4 PBAPS Station Blackout Sequence of Events

PBAPS 2 & 3 Station Blackout Sequence of Events for EPU	
Time (sec)	**Description**
~0	Loss of Offsite Power Reactor scram MSIV start to close Loss of Feedwater Loss of Service Water RCIC available to maintain reactor water level HPCI available to maintain reactor water level
3.5	MSIV closed
5	FW flow stops
~9.65 to 25.2	SRVs open (relief mode)
55.0	Begin HPCI Injection
95.0	Begin RCIC Injection
125.7	End RCIC Injection
125.7	End HPCI Injection
590.3	Begin RCIC Injection
590.3	Begin HPCI Injection
669.2	End RCIC Injection
669.2	End HPCI Injection
1,325.9	Begin RCIC Injection
1,325.9	Begin HPCI Injection
1,395.9	End RCIC Injection
1,395.9	End HPCI Injection
~1,800	Begin RPV pressure control using subsequent SRV operation
2,061.5	Begin RCIC Injection
3,600.0	Alternate AC available
3,600.1	Begin SPC
~5,700.0	LOCA signal
5,700.7	SPC Interrupted
6,302.1	SPC restored
9,450	RCIC suction source aligned to torus
10,520.6	SPC Interrupted (End SPC)
10,520.6	End RCIC Injection
10,520.6	Begin LPCI Injection

Table 2.3-4 PBAPS Station Blackout Sequence of Events (continued)

PBAPS 2 & 3 Station Blackout Sequence of Events for EPU	
Time (sec)	**Description**
11,120.1	SPC available (End 10 minute interruption)
11,163.5	Alternate Shutdown Cooling (ASDC) restored
28,800.0	End of Coping Period

Figure 2.3-1 Drywell EQ Temperature Profile for Current Plant Operating Conditions and EPU Operating Conditions

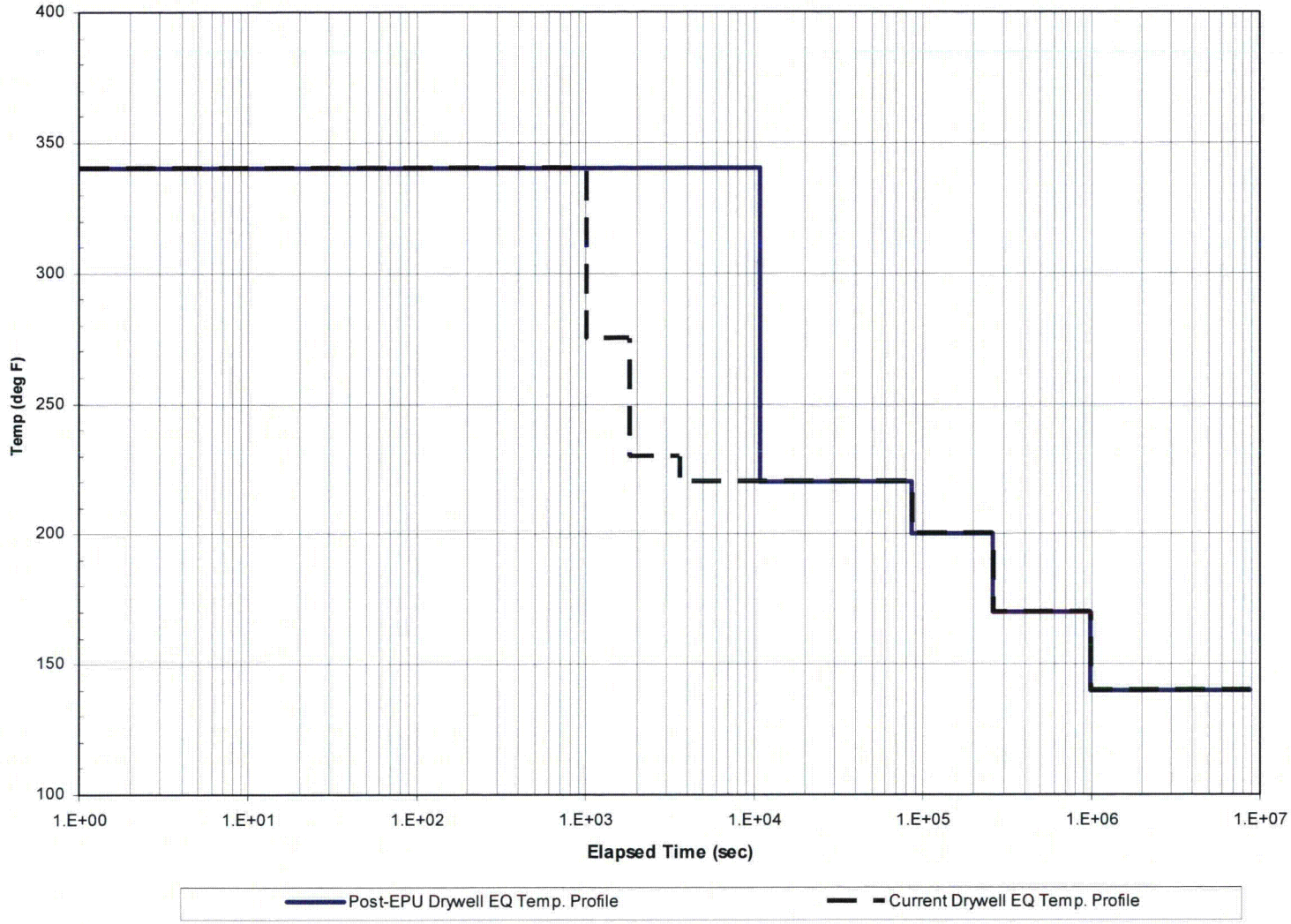

2.4 Instrumentation and Controls

2.4.1 Reactor Protection, Safety Features Actuation, and Control Systems

Regulatory Evaluation

I&C systems are provided to: (1) control plant processes having a significant effect on plant safety; (2) initiate the reactivity control system (including control rods); (3) initiate the Engineered Safety Feature (ESF) systems and essential auxiliary supporting systems; and (4) achieve and maintain a safe shutdown condition of the plant. Diverse I&C systems and equipment are provided for the express purpose of protecting against potential common-mode failures of I&C protection systems. Exelon conducted a review of the reactor trip system, engineered safety feature actuation system (ESFAS), safe shutdown systems, control systems, and diverse I&C systems for the proposed EPU to ensure the systems and any changes necessary for the proposed EPU are adequately designed such that the systems continue to meet their safety functions. Exelon's review was also conducted to ensure failures of the systems do not affect safety functions. The regulatory acceptance criteria related to the quality of design of protection and control systems are based on 10 CFR 50.55a(a)(1), 10 CFR 50.55a(h), and GDCs 1, 4, 13, 19, 20, 21, 22, 23, and 24.

Peach Bottom Current Licensing Basis

The general design criteria listed in RS-001 are those currently specified in 10 CFR 50, Appendix A. The applicable PBAPS principal design criteria predate these criteria. The PBAPS principal design criteria are listed in UFSAR Section 1.5, "Principal Design Criteria." In 1967, the Atomic Energy Commission (AEC) published for public comment a revised set of proposed General Design Criteria (Federal Register 32 FR 10213 (Reference 9), July 11, 1967). Although not explicitly licensed to the AEC proposed General Design Criteria published in 1967, Philadelphia Electric Company (PECO), the predecessor to Exelon, performed a comparative evaluation of the design basis of PBAPS Units 2 and 3, with the AEC proposed General Design Criteria of 1967. The PBAPS UFSAR, Appendix H, "Conformance to AEC (NRC) Criteria," contains this comparative evaluation. UFSAR Appendix H provides a comparative evaluation with each of the groups of criteria set out in the July 1967 AEC release. As to each group of criteria, there is a statement of Exelon's understanding of the intent of the criteria in that group and a discussion of the plant design conformance with the intent of the group of criteria. Following a restatement of each of the proposed criteria is a list of references to locations in the PBAPS UFSAR where there is subject matter relating to the intent of that particular criteria.

For the current GDC listed in the Regulatory Evaluation above, the PBAPS comparative evaluation of the comparable 1967 AEC proposed General Design Criteria (referred to here as "Draft GDC") is contained in PBAPS UFSAR Appendix H: Draft GDC-1, Draft GDC-5, Draft GDC-11, Draft GDC-12, Draft GDC-13, Draft GDC-14, Draft GDC-15, Draft GDC-16, Draft GDC-19, Draft GDC-20, Draft GDC-22, Draft GDC-23, Draft GDC-24, Draft GDC-25, Draft GDC-26, Draft GDC-40 and Draft GDC-42. Alternate Source Term (AST) was approved at

PBAPS as described in the NRC SER for PBAPS Unit 2 and Unit 3 AST License Amendments 269 and 273 (Reference 50), respectively. Current GDC-19 in 10 CFR 50 Appendix A states that holders of operating licenses using an AST shall meet the requirements of current GDC-19. Therefore, current GDC-19 is applicable to PBAPS.

PBAPS I&C systems are described in PBAPS UFSAR Section 7, "Control and Instrumentation."

PBAPS's I&C systems were evaluated for license renewal. Systems and system component materials of construction, operating history, and programs used to manage aging effects were evaluated for plant license renewal and documented in the "Safety Evaluation Report Related to the License Renewal of Peach Bottom Atomic Power Station, Units 2 and 3," NUREG-1769, dated March 2003 (Reference 10). The I&C systems were determined to be within the scope of license renewal, and the components subject to age management review are evaluated on a plant-wide basis as commodities. The electrical commodity groups are described in NUREG-1769, Section 2.5, and aging management for electrical commodities is described in NUREG-1769, Section 3.6.

Technical Evaluation

The setpoint calculation methodology, safety limit-related LSSS determination, and instrument setpoint controls are discussed in this section. A sample calculation is provided in EPU LAR Attachment 14.

NEDC-33004P-A, Revision 4, "Constant Pressure Power Uprate," Class III, July 2003 (also referred to as CLTR) was approved by the NRC as an acceptable method for evaluating the effects of CPPUs. Section 5 of the CLTR addresses the effect of CPPU on Reactor Protection, Safety Features Actuation, and Control Systems. The results of this evaluation are described below.

2.4.1.1 Nuclear Steam Supply System Monitoring and Control Instrumentation

As stated in Section 5.1 of the CLTR, the instruments and controls used to monitor and directly interact with or control reactor parameters are usually within the NSSS. Changes in process variables and their effects on instrument performance and setpoints were evaluated for EPU operation to determine any related changes. Process variable changes are implemented through changes in normal plant operating procedures. TSs address instrument AVs and/or setpoints for those NSSS sensed variables that initiate protective actions. The effects of EPU on TS instrument functions are addressed in Section 2.4.1.3.

The EPU affects the performance of the Neutron Monitoring System. These performance effects are associated with the Average Power Range Monitors (APRMs) and the Wide Range Neutron Monitors (WRNMs). The WRNMs were a system replacement at PBAPS for the original SRMs and IRMs.

PBAPS meets all CLTR dispositions. The topics addressed in this evaluation are:

Topic	CLTR Disposition	PBAPS Result
Average Power Range Monitors, Wide Range Neutron Monitors	[[	Meets CLTR Disposition
Local Power Range Monitors		Meets CLTR Disposition
Rod Block Monitor		Meets CLTR Disposition
Rod Worth Minimizer	]]	Meets CLTR Disposition

2.4.1.1.1 Average Power Range Monitors and Wide Range Neutron Monitors

The CLTR states that at rated power, the increase in power level increases the average flux in the core and at the in-core detectors.

The APRM power signals are calibrated to read 100% at the new licensed power (i.e., EPU RTP). The WRNM provides full overlap with the APRMs.

The WRNM and APRM systems installed at PBAPS are in accordance with the requirements established by the GEH design specifications. The specifications provide confirmation that the APRM and WRNM systems meet all CLTR dispositions.

2.4.1.1.2 Local Power Range Monitors

The CLTR states that at rated power, the increase in power level increases the flux at the local power range monitors (LPRMs).

The average flux experienced by the detectors increases due to the average power increase in the core. The maximum flux experienced by an LPRM remains approximately the same because the peak bundle power does not increase.

Due to the increase in neutron flux experienced by the LPRMs and traversing incore probes (TIPs), the neutronic life of the LPRM detectors may be reduced and radiation levels of the TIPs may be increased. LPRMs are designed as replaceable components. The LPRM accuracy at the increased flux is within specified limits, and LPRM lifetime is an operational consideration that is handled by routine replacement. TIPs are stored in shielded rooms. A small increase in radiation levels is accommodated by the Radiation Protection Program for normal plant operation.

Reliability of LPRM instrumentation and accurate prediction of in-bundle pin powers typically requires operation with bypass voids lower than 5% at nominal conditions. A discussion of the steady-state 5% bypass voiding evaluation is provided in Section 2.8.2.4.1.

The LPRMs installed at PBAPS are in accordance with the requirements established by the GEH design specifications. The specifications provide confirmation that the LPRMs meet all CLTR dispositions.

2.4.1.1.3 Rod Block Monitor

The CLTR states that the increase in power level at the same APRM reference level results in increased flux at the LPRMs that are used as inputs to the rod block monitor (RBM).

The RBM instrumentation is referenced to an APRM channel. Because the APRM has been rescaled, there is only a small effect on the RBM performance due to the LPRM performance at the higher average local flux. The change in performance does not have a significant effect on the overall RBM performance.

The RBMs installed at PBAPS are in accordance with the requirements established by the GEH design specifications. The specifications provide confirmation that the RBMs meet all CLTR dispositions.

2.4.1.1.4 Rod Worth Minimizer

The CLTR states that the increase in reactor power could change the power level at which rod patterns are enforced by the Rod Worth Minimizer (RWM).

The RWM is a normal operating system that does not perform a safety-related function. The rod pattern control function of the RWM assists the operator by enforcing rod patterns until reactor power has reached an appropriate level and subsequently the Rod Withdrawal Limiter function prevents excessive control rod withdrawal. Therefore, no additional plant-specific information for the performance of this system relative to the normal operational function is required. The power-dependent instrument setpoints for the RWM are included in the plant TSs (see Section 2.4.1.3).

The RWM provides the same level of protection as described [[
]] because: (1) only GE (GNF) fuel is used, (2) the thermal power increase of 658 MWt from OLTP (3,293 MWt) to EPU (3,951 MWt) is ≤ 120% of OLTP, (3) Banked Position Withdrawal Sequence (BPWS) is used, and (4) the Low Power Setpoint (LPSP) AL is maintained at the same Percent RTP (%RTP) as the CLTP value.

[[
]]

2.4.1.2 BOP Monitoring and Control

As stated in Section 5.2 of the CLTR, operation of the plant at EPU conditions has minimal effect on the BOP system I&C devices. Based on EPU operating conditions for the power conversion and auxiliary systems, most process control valves and instrumentation have sufficient

range/adjustment capability for use at the EPU conditions. However, some (non-safety) modifications may be needed to the power conversion systems to obtain EPU RTP. PBAPS meets all CLTR dispositions. The topics considered in this section are:

Topic	CLTR Disposition	PBAPS Result
Pressure Control System (PCS)	[[	Meets CLTR Disposition
Turbine Steam Bypass System (Normal Operation)		Meets CLTR Disposition
Turbine Steam Bypass System (Safety Analysis)		Meets CLTR Disposition
FW Control System (Normal Operation)		Meets CLTR Disposition
FW Control System (Safety Analysis)		Meets CLTR Disposition
Leak Detection System (LDS)	]]	Meets CLTR Disposition

2.4.1.2.1 Pressure Control System

The CLTR states that the increase in power level increases the steam flow to the turbine.

The PCS is a normal operating system to provide fast and stable responses to system disturbances related to steam pressure and flow changes to control reactor pressure within its normal operating range. This system does not perform a safety function. Pressure control operational testing is included in the EPU implementation plan as described in Section 2.12 to ensure adequate turbine control valve (TCV) pressure control and flow margin is available.

The PCS at PBAPS meets all CLTR dispositions.

2.4.1.2.2 Turbine Steam Bypass System

The CLTR states that the bypass system capacity, in terms of mass flow, is not changed for EPU. As a result, the increase in power level and resulting increase in steam flow to the turbine effectively reduces the bypass system capacity in terms of percent steam flow. The turbine bypass system (TBS) is not essential for turbine operation and is not credited in any limiting events analyses as discussed in Section 2.8.5.

The Turbine Steam Bypass System is a normal operating system that is used to bypass excessive steam flow. This system is non-safety related. The flow capacity of the bypass system, 3.62 Mlbm/hr, is not changed. [[

]]

The AOO events are discussed further in Section 2.8.5.

The Turbine Steam Bypass System at PBAPS meets all CLTR dispositions.

2.4.1.2.3 Feedwater Control System

The CLTR states that the increase in power results in an increase in FW flow.

The FW Control System is a normally operating system to control and maintain the reactor vessel water level. EPU results in an increase in FW flow. FW control operational testing is included in the EPU implementation plan as described in Section 2.12 to ensure that the FW response is acceptable. Failure of this system is evaluated in the reload analysis for each reload core with the FW controller failure-maximum demand event. The LOFW event can be caused by downscale failure of the controls. The LOFW is discussed in Section 2.8.

The FW Control System at PBAPS meets all CLTR dispositions [[

]]

2.4.1.2.4 Leak Detection System

The CLTR states that the only effect on the LDS due to EPU is a slight increase in the FW system temperature and increase in the steam flow.

[[

]]

- **Main Steam Tunnel in the Reactor Building and in the Turbine Building:** The increased FW temperature results in a negligible increase in the MS tunnel temperature. The LDS temperature setpoints remain unchanged. As a result, the MS tunnel temperature setpoint is conservative because it slightly increases leak detection sensitivity and is not changed.
- **Drywell:** The normal operating DW area temperature experiences a negligible change for EPU conditions; therefore, the DW LDS is not affected.
- **RWCU:** There is no significant change to the RWCU system temperature and pressure and no change to the RWCU system flow; therefore, the RWCU LDS is not affected.
- **RCIC:** There is no increase in the system temperature, pressure, or flow; therefore, the RCIC LDS is not affected.

- **RHR Shutdown Cooling Mode:** There is no increase in the RHR Shutdown Cooling Mode temperature or pressure; therefore, the RHR system LDS is not affected.
- **HPCI**: There is no increase in the system temperature, pressure, or flow; therefore, the HPCI LDS is not affected.

The flow-based LDS is not affected by EPU, with the exception of MSL high flow. MSL high flow is discussed in Section 2.4.1.3.

The LDS at PBAPS meets all CLTR dispositions [[

]]

2.4.1.3 Technical Specification Instrument Setpoints

As stated in Section 5.3 of the CLTR, AVs and/or Nominal Trip Setpoints (setpoints) are those sensed variables which initiate protective actions and are generally associated with the safety analysis. AVs are highly dependent on the results of the safety analysis. The safety analysis generally establishes the ALs. The AVs and other instrument setpoints include consideration of measurement uncertainties and are derived from the ALs. The settings are selected with sufficient margin to minimize inadvertent initiation of the protective action, while assuring that adequate operating margin is maintained between the system settings and the actual limits. There is typically substantial margin in the safety analysis process that should be considered in establishing the setpoint process used to establish the TS AVs and other setpoints.

Increases in the core thermal power and steam flow affect some instrument setpoints. These setpoints are adjusted to maintain comparable differences between system settings and actual limits, and reviewed to ensure that adequate operational flexibility and necessary safety functions are maintained at the EPU RTP level. Where the power increase results in new instruments being employed, an appropriate setpoint calculation is performed and TS and/or Technical Requirements Manual (TRM) changes are implemented, as required. [[

]]

[[

]] The justification for implementing this simplified process for the individual TS and/or TRM setpoints is provided for each instrument below, as applicable. Implementing the constant maximum operating pressure requirement for EPU [[

]]

In addition, the following restrictions are imposed on the use of the simplified process to assure its validity. Its use is limited to:

- NRC-approved GEH or plant-specific methodology.
- [[
-]]

These restrictions are satisfied for PBAPS, except where instrumentation is changed affecting the instrumentation errors. For the PBAPS EPU, the high pressure turbine (HPT) will be modified, which will affect the Turbine First-Stage Pressure (TFSP) setpoint function.

Table 2.4-1 summarizes the current and EPU ALs for PBAPS.

The Setpoint Calculation Methodology and the setpoint value for each topic addressed in this section meet all CLTR dispositions. The topics considered in this section are:

Topic	CLTR Disposition	PBAPS Result
Main Steam Line High Flow Isolation – Setpoint Calculation Methodology	[[	Meets CLTR Disposition
Main Steam Line High Flow Isolation – Setpoint Value		Meets CLTR Disposition
Turbine First-Stage Pressure Scram Bypass - Setpoint Calculation Methodology		Meets CLTR Disposition
Turbine First-Stage Pressure Scram Bypass - Setpoint Value		Meets CLTR Disposition
APRM Flow Biased Scram - Setpoint Calculation Methodology		Meets CLTR Disposition
APRM Flow Biased Scram – Setpoint Value		Meets CLTR Disposition
Rod Worth Minimizer Low Power Setpoint - Setpoint Calculation Methodology		Meets CLTR Disposition
Rod Worth Minimizer Low Power Setpoint – Setpoint Value		Meets CLTR Disposition

Topic	CLTR Disposition	PBAPS Result
Rod Block Monitor		Meets CLTR Disposition
APRM Setdown in Startup Mode – Setpoint Calculation Methodology		Meets CLTR Disposition
APRM Setdown in Startup Mode – Setpoint Value	]]	Meets CLTR Disposition

2.4.1.3.1 Main Steam Line High Flow Isolation

The CLTR states that the effect on the Main Steam Line High Flow Isolation due to EPU is increased reactor power level and steam flow.

The MSL high flow isolation setpoint is used to initiate the isolation of the Group 1 primary containment isolation valves. The only safety analysis event that credits this trip is the main steam line break accident (MSLBA). For this accident, there are redundant trips from high area temperature in the MS tunnel. For PBAPS, there is sufficient margin to choke flow, so the AL for EPU is increased from the current percent of rated steam flow in each MSL.

For PBAPS, the AL is changed to 140% of rated steam flow and no new instrumentation is required (the existing instrumentation has the required upper range limit and calibration span the instrument loops need to accommodate the new setpoint). A new setpoint was calculated using the GEH methodology per Reference 1 and an AV change is required to change the differential pressure at the allowable steam flow.

Therefore, the Main Steam Line High Flow Isolation setpoint meets all CLTR dispositions.

2.4.1.3.2 Turbine First-Stage Pressure Scram and Recirculation Pump Trip Bypass

The CLTR states that the effect on the TFSP Scram Bypass Permissive due to EPU is increased reactor power level and potential change to TFSP. EPU results in an increased power level and the HPT modifications result in a change to the relationship of TFSP to reactor power level. The TFSP setpoint is used to reduce scrams and recirculation pump trips (RPTs) at low power levels where the TBS is effective for turbine trips and generator load rejections. In the safety analysis, this trip bypass only applies to events at low power levels that result in a turbine trip or load rejection. [[

]]

[[

]] Therefore, a new setpoint was calculated using the GEH methodology per Reference 51, and [[

]] The AV (in psig) for PBAPS is revised prior to EPU implementation.

To assure that the new value is appropriate, an EPU plant ascension startup test or normal plant surveillance is performed to validate that the actual plant interlock is cleared consistent with the safety analysis. EPU startup testing is described in Section 2.12.

Therefore, the TFSP Scram Bypass Permissive meets all CLTR dispositions.

2.4.1.3.3 APRM Flow Biased Scram

This function is referred to in the PBAPS TSs as the APRM Simulated Thermal Power – High function. The CLTR states that the effect on the APRM Flow Biased Scram due to EPU is increased reactor power level. APRM Simulated Thermal Power – High function is not associated with a limiting safety system setting. This operating limit for the operating domain is established to provide a pre-emptive scram and to prevent a gross violation of the licensed domain.

The PBAPS Technical Specification AV for this function is being revised based on the methodology outlined in the CLTR. Therefore, a new setpoint was calculated using the GEH methodology per Reference 51, and [[

]] The AV (in %RTP) for PBAPS will be revised prior to EPU implementation. The clamped AL and AV will retain their value in percent power. Therefore, APRM Flow-Biased Scram at PBAPS meets all of the CLTR dispositions.

2.4.1.3.4 Rod Worth Minimizer Low Power Setpoint

The AL, AV and nominal trip setpoints (NTSPs) in terms of % Rated Steam Flow, % Rated FW Flow and percent RTP do not change, and [[

]]

The CLTR states that the effect on the RWM LPSP due to EPU is increased reactor power level and increased FW flow.

The RWM LPSP is used to bypass the rod pattern constraints established for the Control Rod Drop Accident (CRDA) at greater than a pre-established low power level. The measurement parameter is MS and FW flow.

Therefore, the RWM LPSP calculation methodology meets all CLTR dispositions.

The LPSP AL is maintained at the same value in terms of percent power (10% RTP) and the EPU has been evaluated on this basis. Below this setpoint, only banked position mode withdrawals or insertions as described in the Reference 52 are allowed. Therefore, the RWM LPSP meets all CLTR dispositions.

2.4.1.3.5 Rod Block Monitor

[[ ]] the effect on the Rod Block Monitor due to EPU is increased reactor power level.

[[ ]] the severity of a rod withdrawal error (RWE) during power operation event is dependent upon the RBM rod block setpoint. This setpoint is only applicable to the control RWE. [[

]]

[[

]]

[[

]]

2.4.1.3.6 APRM Setdown in Startup Mode

This function is referred to in the PBAPS TSs as the APRM Neutron Flux – High, Setdown function. The CLTR states that the effect on the APRM Setdown in Startup Mode due to EPU is a reduced TS safety limit for reduced pressure or low core flow conditions.

No specific safety analyses take direct credit for this function. It indirectly ensures that reactor power does not exceed 23% RTP before the Mode Switch is placed in "RUN." The APRM setdown in the startup mode provides margin to the safety limit. A diverse trip is provided by the WRNMs. The value for the TS safety limit for reduced pressure or low core flow condition is established to satisfy the fuel thermal limits monitoring requirements.

The PBAPS TS AV for this function will not be changed due to the EPU based on the methodology outlined in the CLTR. The AL (in %RTP) for PBAPS was not changed; therefore no revision is necessary prior to EPU implementation. Therefore, APRM Setdown in Startup Mode at PBAPS meets the CLTR disposition.

2.4.1.3.7 Main Steam Line Low Pressure Isolation in the Run Mode

The AV for the MSL low pressure setpoint is changed for EPU to maintain adequate margin between the trip setpoint and the operating pressure, which will preclude spurious scrams and MSL low pressure isolations on low pressure transients. This change addresses EPU RTP conditions that are expected to result in a lower steam line pressure near the HPT, where the pressure sensors are located, and restores the operating margin. The EPU evaluation, which is supported by transient safety analysis, determined that a reduction to 825 psig in the TS AV is acceptable for plant operation and controlling performance of surveillance testing.

2.4.1.4 Changes to Instrumentation and Controls

In the CLTR SER, the staff requested that the plant-specific submittal address all EPU-related changes to instrumentation, such as scaling changes, changes to upgrade obsolescent instruments, and changes to the control philosophy. Table 2.4-2 provides this information.

Conclusion

Exelon has reviewed the effects of the proposed EPU on the functional design of the reactor protection system (RPS), ESFAS, safe shutdown system, and control systems. Exelon concludes the effects of the proposed EPU on these systems have been adequately addressed and the changes necessary to achieve the proposed EPU are consistent with the plant's design basis. Exelon further concludes that the systems will continue to meet the requirements of 10 CFR 50.55a(a)(1), 10 CFR 50.55a(h), and the current licensing basis. Therefore, Exelon finds the proposed EPU acceptable with respect to I&C.

2.4.2 Instrument Setpoint Sample Calculation

Instrument setpoint sample calculations are provided in EPU LAR Attachment 14.

Table 2.4-1 Technical Specification Setpoint Information

	Values	
Parameter	**Current**	**EPU**
APRM Calibration Basis (MWt)	3514	3951
APRM Neutron Flux - High Scram AL (% RTP)	122	No Change[2]
APRM Simulated Thermal Power – High (%RTP)		
TLO AL[1]	0.65W + 66.0 [3]	0.55W + 65.5 [3]
SLO AL[1]	0.65(W-ΔW) + 66.0 [3,4]	0.55(W -ΔW) + 65.5 [3,4]
Clamp AL[1]	120	No Change[2]
APRM Neutron Flux – High Setdown (%RTP)		
Scram AL	17.3	No Change[2]
Rod Block Monitor ALs	Filtered	Filtered
Low Power Setpoint (Enable) (%RTP)	30	No Change
Intermediate Power Setpoint (%RTP)	65	No Change
High Power Setpoint (%RTP)	85	No Change
Low Trip Setpoint (% Reference Level)	123.0	No Change [6]
Intermediate Trip Setpoint (% Reference Level)	118.0	No Change [6]
High Trip Setpoint (% Reference Level)	113.2	No Change [6]
RWM LPSP AL (%RTP)	10	No Change[7]
Main Steam Line High Flow Isolation (% rated steam flow) AL	137.77	140
Main Steam Line Low Pressure Isolation (in RUN Mode) AV, psig	850	825
Turbine First-Stage Pressure Scram and Recirculation Pump Trip Bypass (%RTP) AL	29.52	26.7
Reactor Vessel Water Level – Low, Level 3 Scram (in. AIZ) AL	0.0	No Change[5]

Notes:

1. No credit is taken in any safety analysis for the flow referenced setpoints.
2. The EPU APRM Neutron Flux - High Scram, APRM Simulated Thermal Power – High Clamp and APRM Neutron Flux – High Setdown remain the same in terms of percent rated power.

3. W is the Recirculation Drive Flow in percent of Rated flow. ΔW is the difference between the TLO and SLO drive flow at the same core flow. The current value of ΔW is 6% and is not changed.
4. The ALs for SLO operation are unchanged in terms of MWt.
5. The AL, AV and NTSP are not changed for EPU for this setpoint function. EPU satisfies the issue with Steam Flow Induced Error (SFIE; also called "Bernoulli error") in the case that the Steam Dryer skirt becomes uncovered for a LOFW, per the related Safety Communication SC04-14 (Reference 53). AIZ means Above Instrument Zero. Instrument Zero = 538.0 inches Above Vessel Zero (AVZ). Units used in the PBAPS TSs are "inches," equivalent to "in. H2O".
6. The cycle-specific reload analysis is used to determine any change in the rod block trip setpoint. The RBM trip setpoints listed are based on an Operating Limit Minimum Critical Power Ratio (OLMCPR) of 1.30. The trip setpoints corresponding to other OLMCPR values also would remain the same for EPU.
7. The EPU RWM LPSP remains the same in terms of percent rated power.

Table 2.4-2 Changes to Instrumentation and Controls

Parameter	EPU Change
MSL High Flow	Recalibrate for AL of 140% rated steam flow.
MSL A/B/C/D Low Pressure	Recalibrate instruments PS-2(3)-02-134A/B/C/D
1st Stage Turbine Pressure	Recalibrate for AL of 26.7% RTP
APRM Flow Biased STP scram	Recalibrate for EPU.
APRM Flow Biased STP rod block	Recalibrate per cycle-specific reload analysis.
Main Condenser Back Pressure	Recalibrate instruments PT-8(9)0650A/B/C
FWH #2 Discharge Pressure	Recalibration of instruments PT-2(3)118A/B/C
RFP Discharge Temperature	Recalibrate instruments TE-2(3)144A/B/C/D/E/F
RFPT LP Steam Inlet Temperature	Recalibrate instruments TE-2(3)160A/B/C
RFPT HP Steam Inlet Temperature	Recalibrate instruments TE-2(3)160D/E/F
RFPT Stop Valve Chest Wall Temperature	Recalibrate instruments TE-4(5)764A/B/C
FWH – 3A/B/C Drain Flow	Recalibrate instruments FT-2(3)049A/B/C
Drain Cooler – 2A/B/C Outlet Flow	Recalibrate instruments FT-2(3)050A/B/C
FWH – 5A/B/C Shell Temperature	Recalibrate instruments TE-2(3)493A/B/C
FWH – 4A/B/C Shell Temperature	Recalibrate instruments TE-2(3)493D/E/F
FWH – 3A/B/C Shell Temperature	Recalibrate instruments TE-2(3)493G/H/J

2.5 Plant Systems

2.5.1 Internal Hazards

2.5.1.1 Flooding

2.5.1.1.1 *Flood Protection*

Regulatory Evaluation

Exelon conducted a review in the area of flood protection to ensure that SSCs important to safety are protected from flooding. The review covered flooding of SSCs important to safety from internal sources, such as those caused by failures of tanks and vessels. The review focused on increases of fluid volumes in tanks and vessels assumed in flooding analyses to assess the impact of any additional fluid on the flooding protection that is provided. The regulatory acceptance criteria for flood protection are based on GDC-2.

Peach Bottom Current Licensing Basis

The general design criteria listed in RS-001 are those currently specified in 10 CFR 50, Appendix A. The applicable PBAPS principal design criteria predate these criteria. The PBAPS principal design criteria are listed in UFSAR Section 1.5, "Principal Design Criteria." In 1967, the Atomic Energy Commission (AEC) published for public comment a revised set of proposed General Design Criteria (Federal Register 32 FR 10213 (Reference 9), July 11, 1967). Although not explicitly licensed to the AEC proposed General Design Criteria published in 1967, Philadelphia Electric Company (PECO), the predecessor to Exelon, performed a comparative evaluation of the design basis of PBAPS Units 2 and 3, with the AEC proposed General Design Criteria of 1967. The PBAPS UFSAR, Appendix H, "Conformance to AEC (NRC) Criteria," contains this comparative evaluation. UFSAR Appendix H provides a comparative evaluation with each of the groups of criteria set out in the July 1967 AEC release. As to each group of criteria, there is a statement of Exelon's understanding of the intent of the criteria in that group and a discussion of the plant design conformance with the intent of the group of criteria. Following a restatement of each of the proposed criteria is a list of references to locations in the PBAPS UFSAR where there is subject matter relating to the intent of that particular criteria.

For the current GDC listed in the Regulatory Evaluation above, the PBAPS comparative evaluation of the comparable 1967 AEC proposed General Design Criteria (referred to here as "Draft GDC") is contained in PBAPS UFSAR Appendix H: Draft GDC-2.

PBAPS internal flooding hazards are described in PBAPS UFSAR Sections 2.4, "Hydrology," 12.2, "Design and Description," Appendix A.10, "High Energy Pipe Break Outside Primary Containment," and Appendix J.3.4.2, "Suction Piping System Supply Water to ECCS (CSCS) – Design Aspects."

In addition to the evaluations described in the PBAPS UFSAR, PBAPS's systems and components were evaluated for license renewal. Systems and system component materials of construction, operating history, and programs used to manage aging effects were evaluated for plant license renewal and documented in the "Safety Evaluation Report Related to the License

Renewal of Peach Bottom Atomic Power Station, Units 2 and 3," NUREG-1769, dated March 2003 (Reference 10). The license renewal evaluation associated with the flood protection barriers is documented in NUREG-1769, Section 2.4. During plant license renewal evaluations, tanks and pipes which were not already in scope pursuant to 10 CFR 54.4(a)(1) or (a)(3) were evaluated to ensure they were not "non-safety equipment whose failure could affect a safety function" (Criterion (a)(2)). Components that met the inclusion criteria were evaluated within the system that contained them. Additionally, civil features whose function was to control, abate, or minimize the effects of flooding were identified and evaluated within the structure that contained them.

Technical Evaluation

2.5.1.1.1.1 High Energy Line Break

NEDC-33004P-A, Revision 4, "Constant Pressure Power Uprate," Class III, July 2003 (also referred to as CLTR) was approved by the NRC as an acceptable method for evaluating the effects of CPPUs. Section 10.1 of the CLTR addresses the effect of CPPU on flooding. The results of this evaluation are described below.

HELBs are evaluated for their effects on equipment qualification.

PBAPS meets all CLTR dispositions. The topics addressed in this evaluation are:

Topic	CLTR Disposition	PBAPS Result
Liquid Lines	[[ ]]	Meets CLTR Disposition

As stated in Section 10.1 of the CLTR, EPU may increase subcooling in the reactor vessel, which may lead to increased mass and energy release rates for liquid line breaks for RWCU only.

Components and/or equipment required for safe shutdown of the reactor were evaluated for the effects of flooding from breaks and cracks in high-energy lines. The evaluations verified that the plant can be safely shut down, assuming a concurrent single active failure in systems necessary to mitigate the consequences of the postulated component failure. Plant flooding due to internal piping failures in the FW system is evaluated for changes due to EPU. Flooding is conservatively evaluated based on the entire hotwell volume being released in the MS tunnel and then draining to the reactor building. Because no changes are made to the existing hotwell inventory, draining systems, and flood barriers; the flood levels in the reactor building due to a FW break are unchanged. The remaining systems evaluated are not impacted by EPU and remain bounded by the current flooding analyses. Internal flooding due to postulated failures in piping systems is not impacted by EPU. Therefore, PBAPS meets all CLTR dispositions for liquid lines.

2.5.1.1.1.2 Moderate Energy Line Break

NEDC-33004P-A, Revision 4, "Constant Pressure Power Uprate," Class III, July 2003 (also referred to as CLTR) was approved by the NRC as an acceptable method for evaluating the effects of CPPUs. Section 10.2 of the CLTR addresses the effect of CPPU on flooding. The results of this evaluation are described below.

The EPU effect on Moderate Energy Line Break (MELB) spray and subcompartment temperature is addressed in Section 2.5.1.3.2. This section discusses the EPU effect on flooding levels.

PBAPS addresses the concern of MELBs through various initiatives including:

- ECCS Flooding Protection
- Response to IE Information Notices 87-49, 88-60, and 90-53
- Individual Plant Examination
- Studies Related to Power Uprate
- Nuclear Engineering Division Guideline for the Evaluation of Internal Hazards

While PBAPS was not originally licensed using the SRP 3.6.1, the licensing and design basis includes specific conditions for MELBs for impacts to safety-related equipment.

MELBs are evaluated for their effects on equipment qualification.

PBAPS meets all CLTR dispositions. The topics addressed in this evaluation for MELB are:

Topic	CLTR Disposition	PBAPS Result
Flooding	[[ ]]	Meets CLTR Disposition

The CLTR states that EPU results in no change in the inventory contained in moderate energy lines.

The flow rates and/or the system inventories of analyzed moderate energy piping systems do not increase for EPU. System design limits (design pressure) used as input to the MELB flooding analyses are not changed by EPU. EPU does not affect the ability of the plant to cope with effects of spray from MELBs. EPU does not introduce new MELB locations and does not introduce or move safety-related equipment with the exception of new MOVs to be added with the RHR heat exchanger cross-tie modification. Any new penetrations in flood barriers added by the RHR heat exchanger cross-tie modification will be appropriately sealed to maintain integrity of the barrier against postulated flooding consistent with the current design of the barrier, as part of the design modification.

EPU will not affect the normal operating water levels and pressure of the torus, the water tight design features of ECCS compartments, and flood level detection equipment. The CW pump structure and location of safety-related equipment within the CW pump structure will not change for EPU.

Therefore, MELB internal flooding meets all CLTR dispositions.

Conclusion

The proposed changes in fluid volumes in tanks and vessels for EPU have been reviewed. Exelon concludes that SSCs important to safety will continue to be protected from flooding and will continue to meet the requirements of the current licensing basis following implementation of the proposed EPU. Therefore, Exelon finds the proposed EPU acceptable with respect to flood protection.

2.5.1.1.2 *Equipment and Floor Drains*

Regulatory Evaluation

The function of the equipment and floor drainage system (EFDS) is to assure that waste liquids, valve and pump leak offs, and tank drains are directed to the proper area for processing or disposal. The EFDS is designed to handle the volume of leakage expected, prevent a backflow of water that might result from maximum flood levels to areas of the plant containing safety-related equipment, and protect against the potential for inadvertent transfer of contaminated fluids to an uncontaminated drainage system. The review of the EFDS included the collection and disposal of liquid effluents outside containment. The review focused on any changes in fluid volumes or pump capacities that are necessary for the proposed EPU and are not consistent with previous assumptions with respect to floor drainage considerations. The regulatory acceptance criteria for the EFDS are based on GDCs 2 and 4 insofar as they require the EFDS to be designed to withstand the effects of earthquakes and to be compatible with the environmental conditions (flooding) associated with normal operation, maintenance, testing, and postulated accidents (pipe failures and tank ruptures).

Peach Bottom Current Licensing Basis

The general design criteria listed in RS-001 are those currently specified in 10 CFR 50, Appendix A. The applicable PBAPS principal design criteria predate these criteria. The PBAPS principal design criteria are listed in UFSAR Section 1.5, "Principal Design Criteria." In 1967, the Atomic Energy Commission (AEC) published for public comment a revised set of proposed General Design Criteria (Federal Register 32 FR 10213 (Reference 9), July 11, 1967). Although not explicitly licensed to the AEC proposed General Design Criteria published in 1967, Philadelphia Electric Company (PECO), the predecessor to Exelon, performed a comparative evaluation of the design basis of PBAPS Units 2 and 3 against the AEC proposed General Design Criteria of 1967. The PBAPS UFSAR, Appendix H, "Conformance to AEC (NRC) Criteria," contains this comparative evaluation. UFSAR Appendix H provides a comparative evaluation with each of the groups of criteria set out in the July 1967 AEC release. As to each

group of criteria, there is a statement of Exelon's understanding of the intent of the criteria in that group and a discussion of the plant design conformance with the intent of the group of criteria. Following a restatement of each of the proposed criteria is a list of references to locations in the PBAPS UFSAR where there is subject matter relating to the intent of that particular criteria.

For the current GDC listed in the Regulatory Evaluation above, the PBAPS comparative evaluation of the comparable 1967 AEC proposed General Design Criteria (referred to here as "Draft GDC") is contained in PBAPS UFSAR Appendix H: Draft GDC-2, Draft GDC-40, and Draft GDC-42.

The equipment and floor drains are described in PBAPS UFSAR Section 10.19, "Plant Equipment and Floor Drainage System."

In addition to the evaluations described in the PBAPS UFSAR, PBAPS's systems and components were evaluated for license renewal. Systems and system component materials of construction, operating history, and programs used to manage aging effects were evaluated for plant license renewal and documented in the "Safety Evaluation Report Related to the License Renewal of Peach Bottom Atomic Power Station, Units 2 and 3," NUREG-1769, dated March 2003 (Reference 10). During plant license renewal evaluations, tanks and pipes which were not already in scope pursuant to 10 CFR 54.4(a)(1) or (a)(3) were evaluated to ensure they were not "non-safety equipment whose failure could affect a safety function" (Criterion (a)(2)). Components that met the inclusion criteria were evaluated within the system that contained them. Additionally, civil features whose function was to control, abate, or minimize the effects of flooding were identified and evaluated within the structure that contained them.

Technical Evaluation

NEDC-33004P-A, Revision 4, "Constant Pressure Power Uprate," Class III, July 2003 (also referred to as CLTR) was approved by the NRC as an acceptable method for evaluating the effects of CPPUs. Section 8.1 of the CLTR addresses the effect of CPPU on the Equipment and Floor Drain system. The results of this evaluation are described below.

PBAPS meets all CLTR dispositions. The topics addressed in this evaluation are:

Topic	CLTR Disposition	PBAPS Result
Waste Volumes	[[ ]]	Meets CLTR Disposition

The CLTR states that power uprate does not affect the floor drain collector subsystem and the waste collector subsystem operation or equipment performance. The floor drain collector subsystem and the waste collector (equipment drain) subsystem both receive periodic inputs from a variety of sources. Neither subsystem is expected to experience a large increase in the total volume of liquid and solid waste due to operation at the EPU condition. The design of the

PBAPS equipment and floor drains inside and outside of containment has been evaluated to ensure any EPU-related liquid radwaste increases can be processed. PBAPS has sufficient capacity to handle added liquid increases expected, i.e., it can collect and process the drain fluids. The drainage systems backflow at maximum flood levels and infiltration of radioactive water into non-radioactive water drains do not change as a result of EPU. The drainage systems design capability to withstand the effects of earthquakes and to be compatible with environmental conditions does not change as a result of EPU. Therefore, EPU does not affect system operation or equipment performance and meets all CLTR dispositions.

Conclusion

The assessment of the effects of the proposed EPU on the EFDS has been reviewed. Exelon concludes that the plant changes resulting in increased water volumes and larger capacity pumps or piping systems have been adequately addressed. Exelon concludes that the EFDS has sufficient capacity to: (1) handle the additional expected leakage resulting from the plant changes; (2) prevent the backflow of water to areas with safety-related equipment; and (3) ensure that contaminated fluids are not transferred to non-contaminated drainage systems. Based on this, the EFDS will continue to meet the requirements of the current licensing basis following implementation of the proposed EPU. Therefore, Exelon finds the proposed EPU acceptable with respect to the EFDS.

2.5.1.1.3 *Circulating Water System*

Regulatory Evaluation

The circulating water system (CWS) provides a continuous supply of cooling water to the main condenser (MC) to remove the heat rejected by the turbine cycle and auxiliary systems. The review of the CWS focused on changes in flooding analyses that are necessary due to increases in fluid volumes or installation of larger capacity pumps or piping needed to accommodate the proposed EPU. The regulatory acceptance criteria for the CWS are based on GDC-4 for the effects of flooding of safety-related areas due to leakage from the CWS and the effects of malfunction or failure of a component or piping of the CWS on the functional performance capabilities of safety-related SSCs.

Peach Bottom Current Licensing Basis

The general design criteria listed in RS-001 are those currently specified in 10 CFR 50, Appendix A. The applicable PBAPS principal design criteria predate these criteria. The PBAPS principal design criteria are listed in UFSAR Section 1.5, "Principal Design Criteria." In 1967, the Atomic Energy Commission (AEC) published for public comment a revised set of proposed General Design Criteria (Federal Register 32 FR 10213 (Reference 9), July 11, 1967). Although not explicitly licensed to the AEC proposed General Design Criteria published in 1967, Philadelphia Electric Company (PECO), the predecessor to Exelon, performed a comparative evaluation of the design basis of PBAPS Units 2 and 3 against the AEC proposed General Design Criteria of 1967. The PBAPS UFSAR, Appendix H, "Conformance to AEC (NRC) Criteria," contains this comparative evaluation. UFSAR Appendix H provides a comparative

evaluation with each of the groups of criteria set out in the July 1967 AEC release. As to each group of criteria, there is a statement of Exelon's understanding of the intent of the criteria in that group and a discussion of the plant design conformance with the intent of the group of criteria. Following a restatement of each of the proposed criteria is a list of references to locations in the PBAPS UFSAR where there is subject matter relating to the intent of that particular criteria.

For the current GDC listed in the Regulatory Evaluation above, the PBAPS comparative evaluation of the comparable 1967 AEC proposed General Design Criteria (referred to here as "Draft GDC") is contained in PBAPS UFSAR Appendix H: Draft GDC-40 and Draft GDC-42.

The CWS is described in PBAPS UFSAR Section 11.6, "Circulating Water System and Cooling Towers."

In addition to the evaluations described in the PBAPS UFSAR, PBAPS's systems and components were evaluated for license renewal. Systems and system component materials of construction, operating history, and programs used to manage aging effects were evaluated for plant license renewal and documented in the "Safety Evaluation Report Related to the License Renewal of Peach Bottom Atomic Power Station, Units 2 and 3," NUREG-1769, dated March 2003 (Reference 10). The license renewal evaluation associated with the CWS is documented in NUREG-1769, Section 2.4.11.

Technical Evaluation

The CWS is not being modified for EPU operation. The performance of the system was evaluated for EPU based on the original design capacity of the CWS and the cooling tower system over the actual range of circulating water inlet temperatures, and confirms that the CWS and heat sink are adequate for EPU operation. Circulating water inlet temperatures may require load reductions based on condenser hotwell limitations, however, this is anticipated to be an infrequent occurrence. The evaluation of the CWS at EPU power indicates sufficient system capacity to ensure that the plant maintains adequate condenser backpressure.

Sources of flooding and protection measures in the CWS are not affected by EPU. MELB flooding analysis changes resulting from the cooling tower modification are addressed in Section 2.5.1.1.1.

Conclusion

Modifications are not required for the CWS to perform its design function. For this reason, Exelon concludes that, consistent with the requirements of the current licensing basis, fluid leakage from the CWS will not result in the failure of safety-related SSCs following implementation of the proposed EPU. Therefore, Exelon finds the proposed EPU acceptable with respect to the CWS.

2.5.1.2 Missile Protection

2.5.1.2.1 *Internally Generated Missiles*

Regulatory Evaluation

The review concerns missiles that could result from in-plant component overspeed failures and high-pressure system ruptures. The review of potential missile sources covered pressurized components and systems, and high-speed rotating machinery. The review was conducted to ensure that safety-related SSCs are adequately protected from internally generated missiles. In addition, for cases where safety-related SSCs are located in areas containing non-safety related SSCs, the non-safety related SSCs were reviewed to ensure that their failure will not preclude the intended safety function of the safety-related SSCs. The review focused on any increases in system pressures or component overspeed conditions that could result during plant operation, AOOs, or changes in existing system configurations such that missile barrier considerations could be affected. The regulatory acceptance criteria for the protection of SSCs important to safety against the effects of internally generated missiles that may result from equipment failures are based on GDC-4.

Peach Bottom Current Licensing Basis

The general design criteria listed in RS-001 are those currently specified in 10 CFR 50, Appendix A. The applicable PBAPS principal design criteria predate these criteria. The PBAPS principal design criteria are listed in UFSAR Section 1.5, "Principal Design Criteria." In 1967, the Atomic Energy Commission (AEC) published for public comment a revised set of proposed General Design Criteria (Federal Register 32 FR 10213 (Reference 9), July 11, 1967). Although not explicitly licensed to the AEC proposed General Design Criteria published in 1967, Philadelphia Electric Company (PECO), the predecessor to Exelon, performed a comparative evaluation of the design basis of PBAPS Units 2 and 3 against the AEC proposed General Design Criteria of 1967. The PBAPS UFSAR, Appendix H, "Conformance to AEC (NRC) Criteria," contains this comparative evaluation. UFSAR Appendix H provides a comparative evaluation with each of the groups of criteria set out in the July 1967 AEC release. As to each group of criteria, there is a statement of Exelon's understanding of the intent of the criteria in that group and a discussion of the plant design conformance with the intent of the group of criteria. Following a restatement of each of the proposed criteria is a list of references to locations in the PBAPS UFSAR where there is subject matter relating to the intent of that particular criteria.

For the current GDC listed in the Regulatory Evaluation above, the PBAPS comparative evaluation of the comparable 1967 AEC proposed General Design Criteria (referred to here as "Draft GDC") is contained in PBAPS UFSAR Appendix H: Draft GDC-40 and Draft GDC-42.

The missile protection for internally generated missiles is described in PBAPS UFSAR Table 1.11.1 (GE Report No. TR67SL211, An Analysis of Turbine Missiles Resulting from Last Stage Wheel Failure, October 1967), Sections 5.2.2, "Primary Containment – Safety Design Basis," 5.2.4.6, "Containment Integrity Protection," 5.3.1, "Reactor Building," 7.1.6.1, "Cable Routing and Separation," 8.4.5, "Auxiliary Power Systems - Description," 10.3.5, "Spent Fuel Storage -

Safety Evaluation," 11.2.4, "Power Generation Evaluation," 12.2, "Structures and Shielding - Design and Description," and Appendix C.2.5.1, "Turbine Missiles."

In addition to the evaluations described in the PBAPS UFSAR, PBAPS's systems and components were evaluated for license renewal. Systems and system component materials of construction, operating history, and programs used to manage aging effects were evaluated for plant license renewal and documented in the "Safety Evaluation Report Related to the License Renewal of Peach Bottom Atomic Power Station, Units 2 and 3," NUREG-1769, dated March 2003 (Reference 10). The equipment and components credited with mitigating the effect of missiles are documented in NUREG-1769, Sections 2.3.3.11 and 2.4, and the programs credited with managing that equipment aging are documented in NUREG-1769, Sections 3.3.11 and 3.5.

Technical Evaluation

NEDC-33004P-A, Revision 4, "Constant Pressure Power Uprate," Class III, July 2003 (also referred to as CLTR) was approved by the NRC as an acceptable method for evaluating the effects of CPPUs. Section 7.1 of the CLTR addresses the effect of CPPU on the T-G. The results of this evaluation regarding turbine missiles are described below.

PBAPS meets all CLTR dispositions. The topics addressed in this evaluation are:

Topic	CLTR Disposition	PBAPS Result
Turbine-generator missile avoidance	[[ ]]	Meets CLTR Disposition

As explicitly stated in Section 7.1 of the CLTR, the increase in steam flow can change the previous missile avoidance and protection analysis.

In support of EPU, the high-pressure and low-pressure turbine rotors at PBAPS are being replaced with integral, non-shrunk on wheels. These integral rotors are not considered a source for potential missile generation for EPU for the slight increase in entrapped energy; [[ ]] Per CLTR Section 7.1, a separate rotor missile analysis is not required for plants with integral wheels; however the new low pressure (LP) turbine rotors have been evaluated to verify that the probability of turbine missile generation remains within the limits of RG 1.115 (Reference 54).

The PBAPS HP and LP turbine rotors will be converted to a single forging and welded design, respectively, and the trip values will be confirmed. The LP rotor conversion from built-up to the welded design significantly increases total rotor inertia. This large increase in inertia slows the acceleration rate of the machine should a load rejection event occur. The estimated peak speed following a full load rejection remains virtually unchanged as a result of EPU. Consequently, there is no need to adjust the design setting of the mechanical trip, which remains at a maximum of 109.3% of rated speed. The calculated overspeed has not changed from approximately 115%

of rated speed. For normal overspeed calculations, it is assumed that all protective steam valves and control systems have responded as intended to minimize the resulting peak speed.

The Spent Fuel Pool (SFP) system is located in the reinforced concrete reactor building. Dynamic effects and missiles that might result from plant equipment failures have not changed with respect the plant's current design.

This review criterion is applicable to EPUs that result in substantially higher system pressures or changes in existing system configuration. The PBAPS EPU does not result in any condition (system pressure increase or equipment overspeed) that could result in an increase in the generation of internally generated missiles. In addition, the PBAPS EPU does not entail any changes in equipment configurations that could change the effect of internally generated missiles on safety-related or non-safety related equipment. Therefore, internally-generated missiles meet all CLTR dispositions.

Conclusion

Exelon has reviewed the changes in system pressures and configurations that are required for the proposed EPU and concludes that SSCs important to safety will continue to be protected from internally generated missiles and will continue to meet the requirements of the current licensing basis following implementation of the proposed EPU. Therefore, Exelon finds the proposed EPU acceptable with respect to internally generated missiles.

2.5.1.2.2 *Turbine Generator*

Regulatory Evaluation

The turbine control system, steam inlet stop and control valves, low pressure turbine steam intercept and inlet control valves, and extraction steam control valves control the speed of the turbine under normal and abnormal conditions, and are thus related to the overall safe operation of the plant. The review of the T-G focused on the effects of the proposed EPU on the turbine overspeed protection features to ensure that a turbine overspeed condition above the design overspeed is very unlikely. The regulatory acceptance criteria for the T-G are based on GDC-4, and relates to protection of SSCs important to safety from the effects of turbine missiles by providing a turbine overspeed protection system (with suitable redundancy) to minimize the probability of generating turbine missiles.

Peach Bottom Current Licensing Basis

The general design criteria listed in RS-001 are those currently specified in 10 CFR 50, Appendix A. The applicable PBAPS principal design criteria predate these criteria. The PBAPS principal design criteria are listed in UFSAR Section 1.5, "Principal Design Criteria." In 1967, the Atomic Energy Commission (AEC) published for public comment a revised set of proposed General Design Criteria (Federal Register 32 FR 10213 (Reference 9), July 11, 1967). Although not explicitly licensed to the AEC proposed General Design Criteria published in 1967, Philadelphia Electric Company (PECO), the predecessor to Exelon, performed a comparative evaluation of the design basis of PBAPS Units 2 and 3 against the AEC proposed General

Design Criteria of 1967. The PBAPS UFSAR, Appendix H, "Conformance to AEC (NRC) Criteria," contains this comparative evaluation. UFSAR Appendix H provides a comparative evaluation with each of the groups of criteria set out in the July 1967 AEC release. As to each group of criteria, there is a statement of Exelon's understanding of the intent of the criteria in that group and a discussion of the plant design conformance with the intent of the group of criteria. Following a restatement of each of the proposed criteria is a list of references to locations in the PBAPS UFSAR where there is subject matter relating to the intent of that particular criteria.

For the current GDC listed in the Regulatory Evaluation above, the PBAPS comparative evaluation of the comparable 1967 AEC proposed General Design Criteria (referred to here as "Draft GDC") is contained in PBAPS UFSAR Appendix H: Draft GDC-40 and Draft GDC-42.

The T-G is described in PBAPS UFSAR Sections 7.11, "Pressure Regulator and Turbine Generator Control System," and 11.2, "Turbine-Generator."

In addition to the evaluations described in the PBAPS UFSAR, PBAPS's systems and components were evaluated for license renewal. Systems and system component materials of construction, operating history, and programs used to manage aging effects were evaluated for plant license renewal and documented in the "Safety Evaluation Report Related to the License Renewal of Peach Bottom Atomic Power Station, Units 2 and 3," NUREG-1769, dated March 2003 (Reference 10). The license renewal evaluation associated with the T-G is documented in NUREG-1769, Sections 2.4.4 and 3.5.3.

Technical Evaluation

NEDC-33004P-A, Revision 4, "Constant Pressure Power Uprate," Class III, July 2003 (also referred to as CLTR) was approved by the NRC as an acceptable method for evaluating the effects of CPPUs. Section 7.1 of the CLTR addresses the effect of CPPU on the T-G. The results of this evaluation are described below.

PBAPS meets all CLTR dispositions. The topics addressed in this evaluation are:

Topic	CLTR Disposition	PBAPS Result
Turbine-generator performance	[[ ]]	Meets CLTR Disposition

The CLTR states that the increase in thermal energy and steam flow from the reactor is translated to an increased electrical output from the station by the T-G.

The T-G is required for normal plant operation and is not safety-related. Most plants were originally designed for a maximum steam flow of 105%. Experience with previous power uprate applications indicates that turbine and generator modifications (e.g., turbine rotating element modification) are required to support power uprate. These modifications are required to support

normal operation and are non-safety related. The T-G overspeed protection systems will be evaluated to ensure that adequate protection is provided for EPU conditions.

The turbine and generator are designed with a maximum flow-passing capability and generator output in excess of current rated conditions to ensure that the current rated steam-passing capability and generator output is achieved. This excess design capacity ensures that the turbine and generator meet rated conditions for continuous operating capability with allowances for variation in flow coefficients from expected values, manufacturing tolerances, and other variables that may adversely affect the flow-passing capability of the units. The difference in steam-passing capability between the design condition and the rated condition is called the flow margin.

The main turbine currently operates with a design flow margin of 3.4%. The current rated throttle steam flow is 14.4 Mlbm/hr at a throttle pressure of 994 psia. The generator was originally rated at 1280 MVA, which results in a rated electrical output (gross) of 1159.5 MWe at a power factor of 0.906 and a reactive power of 542 MVAR.

At the EPU RTP and reactor dome pressure of 1050 psia, the turbine operates at an increased rated throttle steam flow of 16.24 Mlbm/hr and at a throttle pressure of 964.2 psia. The existing HPT is not capable of passing this flow and will be replaced prior to EPU with one designed for EPU flow conditions. The new HPT section will be designed with adequate effective throttle flow margin for operation at EPU. The design point of the new turbine will include this flow margin in order to ensure that the turbine will be able to pass the rated throttle, as well as to allow sufficient margin for reactor pressure control. The valve wide-open (VWO) condition, therefore, refers to the turbine supply steam flow with additional margin over rated condition when adjusted for the lower inlet pressure associated with higher flow. For operation at EPU, the high-pressure steam path will be redesigned for at least the minimum target throttle flow margin, to increase its flow passing capability.

The low pressure turbine (LPT) rotors and inner casings at PBAPS are being replaced prior to EPU, incorporating EPU operating condition. Therefore, the increased EPU steam flow will have no effect on the structural integrity of the low pressure turbine blades for the following reasons:

For the replacement LPT, all stages of LP blades, including the airfoil and the roots, were manufactured from corrosion resistant materials. Both the rotating and the stationary parts of the LPT are specifically designed to avoid stress corrosion cracking (SCC). The LPT natural frequency was evaluated and found to be acceptable. The new turbine design excludes natural frequencies that are coincident with operating resonance frequencies.

Both lateral and torsional vibration analysis were performed for the retrofit LP turbines considering EPU conditions to demonstrate that increased steam flow will not cause excessive vibration on the LP turbines and the generator. For the LPT, the natural frequency was evaluated and found to be acceptable. For the new HPT, adequate lateral and torsional vibration analyses

will be performed to demonstrate that the shaft line will operate away from natural frequencies within the operating range.

Generator components were evaluated to identify the impact of the steam turbine uprate on the generator. It was determined that an increase in generator rating to 1530 MVA is required. The rewound generator will support the uprate to rated 120% OLTP – 1408 MWe at 0.920 PF for Unit 2 and 1377 MWe at 0.900 PF for Unit 3. The Reactive Capability Curves are shown in Figures 2.5-8a and 2.5-8b.

A specific missile generation study was conducted and concluded acceptability at EPU power operation. The probability of LP turbine missile generation due to low-speed burst for PBAPS is 0.97×10^{-6} per year per unit. The probability of a missile as a result of a runaway overspeed event is acceptable for EPU.

The overspeed calculation compares the entrapped steam energy contained within the turbine and the associated piping, after the stop valves trip, and the sensitivity of the rotor train for the capability of overspeeding. The entrapped energy increases for EPU conditions. The hardware modification design and implementation process establishes the overspeed trip settings to provide protection for a turbine trip.

The PBAPS EPU turbine design does not result in increases in system pressures, configurations, or equipment overspeed that would affect the evaluation of internally generated missiles on safety-related or non-safety related equipment. Overspeed analysis was performed as part of the LPT retrofit at EPU power level. The effect of the HPT retrofit on the overspeed analysis will be evaluated as part of the detailed design process for the HPT modification. Therefore, the PBAPS T-G meets all CLTR dispositions.

Conclusion

Exelon has reviewed the assessment of the effects of the proposed EPU on the T-G and concludes that the effects of changes in plant conditions on turbine overspeed have been adequately addressed. Exelon concludes that the T-G will continue to provide adequate turbine overspeed protection to minimize the probability of generating turbine missiles and will continue to meet the requirements of the current licensing basis following implementation of the proposed EPU. Therefore, Exelon finds the proposed EPU acceptable with respect to the T-G.

2.5.1.3 Pipe Failures

Regulatory Evaluation

A review was conducted of the plant design for protection from piping failures outside containment to ensure that: (1) such failures would not cause the loss of needed functions of safety-related systems; and (2) the plant could be safely shut down in the event of such failures. The review of pipe failures included high and moderate energy fluid system piping located outside of containment. The review focused on the effects of pipe failures on plant environmental conditions, CR habitability, and access to areas important to safe control of post-accident operations where the consequences are not bounded by previous analyses. The

regulatory acceptance criteria for pipe failures are based on GDC-4, which requires, in part, that SSCs important to safety be designed to accommodate the dynamic effects of postulated pipe ruptures, including the effects of pipe whipping and discharging fluids.

Peach Bottom Current Licensing Basis

The general design criteria listed in RS-001 are those currently specified in 10 CFR 50, Appendix A. The applicable PBAPS principal design criteria predate these criteria. The PBAPS principal design criteria are listed in UFSAR Section 1.5, "Principal Design Criteria." In 1967, the Atomic Energy Commission (AEC) published for public comment a revised set of proposed General Design Criteria (Federal Register 32 FR 10213 (Reference 9), July 11, 1967). Although not explicitly licensed to the AEC proposed General Design Criteria published in 1967, Philadelphia Electric Company (PECO), the predecessor to Exelon, performed a comparative evaluation of the design basis of PBAPS Units 2 and 3 against the AEC proposed General Design Criteria of 1967. The PBAPS UFSAR, Appendix H, "Conformance to AEC (NRC) Criteria," contains this comparative evaluation. UFSAR Appendix H provides a comparative evaluation with each of the groups of criteria set out in the July 1967 AEC release. As to each group of criteria, there is a statement of Exelon's understanding of the intent of the criteria in that group and a discussion of the plant design conformance with the intent of the group of criteria. Following a restatement of each of the proposed criteria is a list of references to locations in the PBAPS UFSAR where there is subject matter relating to the intent of that particular criteria.

For the current GDC listed in the Regulatory Evaluation above, the PBAPS comparative evaluation of the comparable 1967 AEC proposed General Design Criteria (referred to here as "Draft GDC") is contained in PBAPS UFSAR Appendix H: Draft GDC-40 and Draft GDC-42.

Piping failures outside containment are described in PBAPS UFSAR Sections 4.5, "Main Steam Line Flow Restrictors," 14.6.5, "Main Steam Line Break Accident," and Appendix A.10, "High Energy Pipe Break Outside the Primary Containment."

Technical Evaluation

NEDC-33004P-A, Revision 4, "Constant Pressure Power Uprate," Class III, July 2003 (also referred to as CLTR) was approved by the NRC as an acceptable method for evaluating the effects of CPPUs. Sections 9.2.1, 10.1, and 10.2 of the CLTR address the effects of CPPU on Piping Failures. The results of this evaluation are described below.

2.5.1.3.1 *High Energy Piping Outside Containment*

Where EPU resulted in increased piping stresses in high energy piping outside containment the increased stresses were evaluated against existing line break criteria to identify any potential new break locations. The results of that evaluation (see Section 2.2.1) determined that there are no new HELB locations outside containment due to operation at EPU conditions.

Pipe break criteria were evaluated based on the requirements of Section A.10.2 of the UFSAR, which is based on commitments made by the licensee to the AEC/NRC staff in January 1973.

The combinations of stresses were evaluated to meet the requirement of pipe break criteria. Based on these criteria, no new postulated pipe break locations were identified.

Existing HELB locations outside containment that are affected by EPU are identified in Section 2.2.1 with the effects summarized in Table 2.2-1.

PBAPS meets all CLTR dispositions. The topics addressed in this evaluation are:

Topic	CLTR Disposition	PBAPS Result
Steam lines	[[	Meets CLTR Disposition
Liquid lines	]]	Meets CLTR Disposition

2.5.1.3.1.1 Steam Lines

The effect of EPU on HELB mass and energy release rates for steam lines outside containment is documented in Section 2.2.1.1. Section 2.2.1.1 concludes that the generic CLTR disposition for HELBs in steam lines is applicable and EPU has no effect on HELB mass and energy release rates for steam lines outside containment.

The CLTR states that there is no effect on steam line breaks because steam conditions at the postulated break conditions are unchanged.

EPU has no effect on the steam pressure or enthalpy at the postulated break locations. Therefore, EPU has no effect on the mass and energy releases from a HELB in a steam line.

Therefore, the PBAPS Steam Lines meet all CLTR dispositions.

2.5.1.3.1.2 Liquid Lines

Section 2.2.1.2 documents the [[ ]] evaluations of high-energy liquid line breaks outside containment. Evaluations are documented for the RWCU and FW systems.

Section 2.2.1.2.1 documents the [[ ]] evaluation of RWCU line breaks.

Section 2.2.1.2.2 documents the [[ ]] HELB evaluation for FWLBs outside containment. The FW system evaluation concludes that the minor changes in FWLB mass and energy releases associated with EPU will not challenge the bases for the HELB analysis of record disposition which concludes that the effects of a FWLB are bounded by the effects of the postulated MSL breaks. The effects of EPU operation on the FWLB Pipe Whip, JI, Jet Reaction and Flooding analyses are addressed in Sections 2.2.1.2 and 2.5.1.1.

The CLTR states that EPU may increase subcooling in the reactor vessel, which may lead to increased break flow rates for liquid line breaks. EPU conditions may result in an increase in the

mass and energy release for liquid line breaks. Therefore, liquid line breaks are evaluated for EPU, and the evaluations include EPU effects on subcompartment pressures and temperatures, pipe whip and JI, and flooding.

The ability of the plant to cope with the flooding effects from HELBs outside containment that are affected by EPU is evaluated in Section 2.5.1.1.

RWCU mass and energy release rates and their effect on environmental conditions (compartment pressures and temperatures) were re-analyzed for both CLTP and EPU. The CLTP mass and energy release rates for FWLBs are negligibly affected by EPU. However, the effects of a FW System Line Break on MS tunnel peak pressures and temperatures will continue to be bounded by a MSLB in the MS tunnel.

Therefore, the PBAPS Liquid Lines meet all CLTR dispositions.

2.5.1.3.2 *Moderate Energy Piping Outside Containment*

As stated in Section 2.5.1.1, system design limits (design pressure) used as input to the Moderate Energy Line Crack (MELC) flooding analyses and are not changed by EPU. Because the PBAPS MELC mass releases and environmental conditions (pressures and temperatures) are not affected by the EPU, there is no adverse impact to post-MELC CR habitability or on access to areas important to safe control of post-accident operations.

	Topic	CLTR Disposition	PBAPS Result
	Flooding	[[ ]]	Meets CLTR Disposition

The CLTR states that EPU results in no change in the inventory contained in moderate energy lines.

Therefore, flooding meets all CLTR dispositions.

2.5.1.3.3 *Environmental Conditions*

Accident temperature, pressure, and humidity environments used for qualification of equipment outside containment result from an MSLB, or other HELBs, whichever is limiting for each plant area. The HELB pressure profiles for CLTP conditions were determined to be bounding for EPU conditions. The peak HELB temperatures at EPU RTP are bounded by the values used for equipment qualification at CLTP conditions. Details regarding analyses pertaining to the above environmental conditions are addressed in Section 2.3.1.

Conclusion

Exelon has reviewed the changes that are necessary for the proposed EPU and the PBAPS proposed operation of the plant, and concludes that SSCs important to safety will continue to be protected from the dynamic effects of postulated piping failures in fluid systems outside

containment and will continue to meet the requirements of the current licensing basis, following implementation of the proposed EPU. Therefore, Exelon finds the proposed EPU acceptable with respect to protection against postulated piping failures in fluid systems outside containment.

2.5.1.4 Fire Protection

Regulatory Evaluation

The purpose of the fire protection program (FPP) is to provide assurance, through a defense-in-depth design, that a fire will not prevent the performance of necessary safe plant shutdown functions and will not significantly increase the risk of radioactive releases to the environment. The review focused on the effects of the increased decay heat on the plant's safe shutdown analysis to ensure that SSCs required for the safe shutdown of the plant are protected from the effects of the fire and will continue to be able to achieve and maintain safe shutdown following a fire. The regulatory acceptance criteria for the FPP are based on: (1) 10 CFR 50.48 and associated Appendix R to 10 CFR 50, insofar as they require the development of an FPP to ensure, among other things, the capability to safely shut down the plant; (2) GDC-3, insofar as it requires that: (a) SSCs important to safety be designed and located to minimize the probability and effect of fires, (b) noncombustible and heat resistant materials be used, and (c) fire detection and fighting systems be provided and designed to minimize the adverse effects of fires on SSCs important to safety; and (3) GDC-5, insofar as it requires that SSCs important to safety not be shared among nuclear power units unless it can be shown that sharing will not significantly impair their ability to perform their safety functions.

Peach Bottom Current Licensing Basis

The general design criteria listed in RS-001 are those currently specified in 10 CFR 50, Appendix A. The applicable PBAPS principal design criteria predate these criteria. The PBAPS principal design criteria are listed in UFSAR Section 1.5, "Principal Design Criteria." In 1967, the Atomic Energy Commission (AEC) published for public comment a revised set of proposed General Design Criteria (Federal Register 32 FR 10213 (Reference 9), July 11, 1967). Although not explicitly licensed to the AEC proposed General Design Criteria published in 1967, Philadelphia Electric Company (PECO), the predecessor to Exelon, performed a comparative evaluation of the design basis of PBAPS Units 2 and 3 against the AEC proposed General Design Criteria of 1967. The PBAPS UFSAR, Appendix H, "Conformance to AEC (NRC) Criteria," contains this comparative evaluation. UFSAR Appendix H provides a comparative evaluation with each of the groups of criteria set out in the July 1967 AEC release. As to each group of criteria, there is a statement of Exelon's understanding of the intent of the criteria in that group and a discussion of the plant design conformance with the intent of the group of criteria. Following a restatement of each of the proposed criteria is a list of references to locations in the PBAPS UFSAR where there is subject matter relating to the intent of that particular criteria.

For the current GDC listed in the Regulatory Evaluation above, the PBAPS comparative evaluation of the comparable 1967 AEC proposed General Design Criteria (referred to here as "Draft GDC") is contained in PBAPS UFSAR Appendix H: Draft GDC-3 and Draft GDC-4.

Fire Protection is described in a document transmitted to the NRC on September 30, 1986 titled, "Fire Protection Program, Peach Bottom Atomic Power Station, Units 2 and 3" (Reference 55), and is incorporated by reference into the UFSAR in Section 10.12, "Fire Protection Program."

Fire Protection is also described in PBAPS UFSAR Section 7.1.6, "Redundant System Wiring Independence, Protection, and Marking."

In addition to the evaluations described in the PBAPS UFSAR, PBAPS's systems and components were evaluated for license renewal. Systems and system component materials of construction, operating history, and programs used to manage aging effects were evaluated for plant license renewal and documented in the "Safety Evaluation Report Related to the License Renewal of Peach Bottom Atomic Power Station, Units 2 and 3," NUREG-1769, dated March 2003 (Reference 10). The fire protection systems and activities are documented in NUREG-1769, Sections 2.3.3.7 and 3.0.3.16. Fire barrier materials are addressed as a commodity group, while walls, floors, doors, and structural steel are evaluated within the building that contains them. Components credited with achieving safe shutdown following a fire are evaluated within the system that contains them. Management of aging effects on the fire protection systems is documented in NUREG-1769, Section 3.3.7.

Technical Evaluation

2.5.1.4.1 Fire Protection Program

NEDC-33004P-A, Revision 4, "Constant Pressure Power Uprate," Class III, July 2003 (also referred to as CLTR) was approved by the NRC as an acceptable method for evaluating the effects of CPPUs. Section 6.7 of the CLTR addresses the effect of CPPU on the FPP. The results of this evaluation are described below.

As explicitly stated in Section 6.7 of the CLTR, [[

]]

Therefore, the reactor and containment responses and operator actions will be evaluated [[
]] for EPU.

This section addresses the effect of EPU on the FPP, fire suppression and detection systems, and reactor and containment system responses to postulated 10 CFR 50 Appendix R fire events.

PBAPS meets all CLTR dispositions. The topics addressed in this evaluation are:

Topic	CLTR Disposition	PBAPS Result
Fire Suppression and Detection Systems	[[	Meets CLTR Disposition
Operator Response Time		Meets CLTR Disposition
Peak Cladding Temperature		Meets CLTR Disposition
Vessel Water Level		Meets CLTR Disposition
Suppression Pool Temperature	]]	Meets CLTR Disposition

As explicitly stated in Section 6.7 of the CLTR, the higher decay heat associated with EPU may reduce the time available for the operator to perform the actions necessary to achieve and maintain cold shutdown conditions. The higher decay heat also results in higher suppression pool temperatures. The higher decay heat may result in lower vessel water levels or higher peak cladding temperatures (PCTs), depending on the plant-specific analysis basis. As a result of these effects, fire suppression and detection systems, operator response time, PCT, vessel water level, and suppression pool temperature need to be addressed.

[[

]]. Modifications to the CST will be implemented to ensure that sufficient inventory is available for the EPU Appendix R scenarios that credit the CST. Because the CST is credited as the exclusive HPCI and RCIC makeup water source to the RPV for the EPU Appendix R analysis, additional modifications will be implemented to ensure the CST makeup flowpath to HPCI and RCIC is available for Appendix R scenarios that credit HPCI and RCIC. Except for the CST modifications that are required, other safe shutdown systems and equipment used to achieve and maintain cold shutdown conditions do not change, and are adequate for the EPU conditions. EQ of equipment at EPU is addressed in PUSAR Section 2.2.5.

To depressurize the reactor, the PBAPS analysis of record for shutdown method "C" (see Section 2.5.1.4.2 for the PBAPS safe shutdown methods) determined that three SRVs of the ADS were required to be opened within 27.5 minutes. At EPU conditions, the time available to the operator to open three SRVs and initiate reactor depressurization is 26.5 minutes. This reduction is due to the higher decay heat at the EPU condition. For shutdown method "D", the time to initiate torus cooling from the Appendix R fire event initiation is reduced from 180 minutes to 150 minutes and the time to initiate RPV depressurization is reduced from 300 minutes to 210 minutes. The

change in the torus cooling initiation time for shutdown method "D" make this operator action consistent with shutdown method "B" action times, which do not change for EPU.

PBAPS does not take credit in any safety analysis for the fire protection system other than for fire protection activities. Procedures are provided under Transient Response Implementation Plan procedures (TRIPs), Severe Accident Management Procedures (SAMPs), and Technical Support Guide TSG 4.1, which provide instructions for utilizing fire protection system pumps to provide water to the reactor, the DW, or the suppression chamber if necessary. However, this use of the non-safety related fire protection system is not credited in any safety analyses and EPU operation will not require any changes to these procedures regarding the utilization of the fire protection system.

With these procedures implemented, the fire protection systems and analyses are sufficient to support EPU. EPU is found to not affect the elements of the fire protection plan related to (1) administrative controls, (2) fire suppression and detection systems, (3) fire barriers, (4) fire protection responsibilities of plant personnel, and (5) procedures and resources necessary for the repair of systems required to achieve and maintain cold shutdown. In addition, the increase in decay heat will not result in an increase in the potential for a radiological release resulting from a fire. Administrative controls associated with fire protection in the TSs, the TRM, and the Nuclear QA Plan are adequate and there are no changes required for EPU. In addition, as part of the design configuration process, modifications associated with EPU will be assessed and assured not to adversely affect the ability to achieve and maintain safe shutdown in the event of a fire.

The reactor and containment response to the postulated 10 CFR 50 Appendix R fire event at EPU conditions is evaluated in Section 2.5.1.4.2. The results show that the peak fuel cladding temperature, reactor pressure and containment pressures and temperatures are below the acceptance limits and demonstrate that there is a reduction of 1 minute from CLTP condition for the operators to perform the necessary actions to achieve and maintain cold shutdown conditions.

Cold shutdown is achieved within 62 hours under ASDC. As such, it can be concluded that the 72-hour cold shutdown as stipulated by Appendix R is met.

Therefore, the fire protection systems at PBAPS meet all CLTR dispositions.

2.5.1.4.2 10 CFR 50 Appendix R Fire Event

[[

]] The limiting Appendix R fire events were analyzed under the EPU conditions. The fuel heatup analysis was performed using the SAFER/GESTR-LOCA analysis model. The containment analysis was performed using the SHEX model. This evaluation determined the effect of EPU on fuel cladding integrity, reactor vessel integrity, and containment integrity as a result of the fire event.

Four shutdown methods defined in the PBAPS Fire Protection Report (Reference 56) were reanalyzed under EPU conditions. These shutdown methods are described below:

Shutdown Method "A": Utilize the RCIC, two SRVs and one RHR pump (in LPCI, pool cooling and ASDC modes) to achieve the plant shutdown.

Shutdown Method "B": Utilize the HPCI, two SRVs and one RHR pump (in LPCI, pool cooling and ASDC modes) to achieve the plant shutdown.

Shutdown Method "C": Utilize manual control of three SRVs of the ADS for the depressurization of RPV, along with either one CS pump and one RHR pump in pool cooling and ASDC modes, or one RHR pump in LPCI, pool cooling and ASDC modes.

Shutdown Method "D": Utilize the HPCI, one SRV and one RHR pump (in LPCI, pool cooling and ASDC modes) to achieve the plant shutdown at alternative control station.

The bounding PCT for PBAPS is shutdown Method "C" with one RHR in LPCI mode. The bounding peak suppression pool temperature for PBAPS is shutdown Method A with RCIC (CST and Refueling Water Storage Tank (RWST) are credited), one RHR in LPCI mode.

Key inputs for the Appendix R evaluations are provided in Table 2.5.1.

The results of the Appendix R evaluation for 110% OLTP and EPU RTP provided in Table 2.5-2, Table 2.5-3, Figures 2.5-1 through 2.5-5 for the limiting shutdown Method "C" case and Table 2.5-4, Figures 2.5-6 through 2.5-7 for the limiting shutdown Method "A" case demonstrate that the fuel cladding integrity, reactor vessel integrity and containment integrity are maintained and the available time for the operator to perform the necessary actions is about 26.5 minutes. One train of systems remains available to achieve and maintain safe shutdown conditions from either the main CR or the remote shutdown panel. Modifications to the CST are needed to implement to ensure that sufficient inventory is available for the Appendix R scenarios that credit the CST. The operator action time for ADS initiation is reduced about 1 minute from CLTP condition.

Conclusion

Exelon has reviewed the fire-related safe shutdown assessment and concludes that the effects of the increased decay heat on the ability of the required systems to achieve and maintain safe shutdown conditions have been adequately evaluated. Exelon further concludes that the FPP will continue to meet the requirements of 10 CFR 50.48 and meet the intent of Appendix R to 10 CFR 50 and the current licensing basis following implementation of the proposed EPU. Therefore, Exelon finds the proposed EPU acceptable with respect to fire protection.

2.5.2 Fission Product Control

2.5.2.1 Fission Product Control Systems and Structures

Regulatory Evaluation

The review for fission product control systems and structures covered the basis for developing the mathematical model for DBLOCA dose computations, the values of key parameters, the applicability of important modeling assumptions, and the functional capability of ventilation systems used to control fission product releases. The review primarily focused on any adverse effects that the proposed EPU may have on the assumptions used in the analyses for control of fission products. The regulatory acceptance criteria are based on GDC-41, insofar as it requires that the containment atmosphere cleanup system be provided to reduce the concentration of fission products released to the environment following postulated accidents.

Peach Bottom Current Licensing Basis

The general design criteria listed in RS-001 are those currently specified in 10 CFR 50, Appendix A. The applicable PBAPS principal design criteria predate these criteria. The PBAPS principal design criteria are listed in UFSAR Section 1.5, "Principal Design Criteria." In 1967, the Atomic Energy Commission (AEC) published for public comment a revised set of proposed General Design Criteria (Federal Register 32 FR 10213 (Reference 9), July 11, 1967). Although not explicitly licensed to the AEC proposed General Design Criteria published in 1967, Philadelphia Electric Company (PECO), the predecessor to Exelon, performed a comparative evaluation of the design basis of PBAPS Units 2 and 3 against the AEC proposed General Design Criteria of 1967. The PBAPS UFSAR, Appendix H, "Conformance to AEC (NRC) Criteria," contains this comparative evaluation. UFSAR Appendix H provides a comparative evaluation with each of the groups of criteria set out in the July 1967 AEC release. As to each group of criteria, there is a statement of Exelon's understanding of the intent of the criteria in that group and a discussion of the plant design conformance with the intent of the group of criteria. Following a restatement of each of the proposed criteria is a list of references to locations in the PBAPS UFSAR where there is subject matter relating to the intent of that particular criteria.

However, there is not a Draft GDC directly associated with the current GDC listed in the Regulatory Evaluation above (GDC-41).

The SGTS is described in PBAPS UFSAR Sections 5.3.3, "Standby Gas Treatment System," and 14.9.2, "Current Licensing Basis Dose Evaluations Using Alternative Source Term (RG 1.183)."

In addition to the evaluations described in the PBAPS UFSAR, PBAPS's systems and components were evaluated for license renewal. Systems and system component materials of construction, operating history, and programs used to manage aging effects were evaluated for plant license renewal and documented in the "Safety Evaluation Report Related to the License Renewal of Peach Bottom Atomic Power Station, Units 2 and 3," NUREG-1769, dated March 2003 (Reference 10). The license renewal evaluation associated with the SGTS is documented

in NUREG-1769, Section 2.3.2.7. Management of aging effects on the SGTS is documented in NUREG-1769, Section 3.2.7.

Technical Evaluation

NEDC-33004P-A, Revision 4, "Constant Pressure Power Uprate," Class III, July 2003 (also referred to as CLTR) was approved by the NRC as an acceptable method for evaluating the effects of CPPUs. Section 4.5 of the CLTR addresses the effect of CPPU on the SGTS.

The assumptions regarding leakage and exhaust paths from the primary and secondary containments and other sources are as described in AST methodology for PBAPS (Reference 57).

PBAPS meets all CLTR dispositions except for that involving the iodine inventory. Based on changes in source term due to EPU, the new iodine inventory at DBLOCA time zero is increased over that found in the CLTR. As such, a [[ ]] evaluation has been performed. Also, the PBAPS SGTS utilizes a deluge system instead of minimum cooling flow to prevent desorption in the case of increased decay heating. This is considered acceptable for that purpose. The topic addressed in this evaluation is:

Topic	CLTR Disposition	PBAPS Result
Iodine removal capability	[[ ]]	[[ ]]

The CLTR states that the core inventory of iodine and subsequent loading on the SGTS filters or charcoal adsorbers are affected by EPU.

The SGTS is designed to maintain secondary containment at a negative pressure and to provide an elevated release path for the removal of fission products potentially present during abnormal conditions. By preventing the ground level release of airborne particulates and halogens, the SGTS limits off-site dose following a postulated DBA. The flow capacity of the SGTS and its ability to maintain a negative pressure in the secondary containment are discussed in Section 2.6.6.

At PBAPS, neither the SGTS component design nor the filter materials are being altered due to the EPU. The total (radioactive plus stable) post-LOCA iodine loading on the charcoal adsorbers increases proportionally with the increase in core iodine inventory, which increases with core thermal power. However, sufficient charcoal mass is present so that the post-LOCA iodine loading on the charcoal remains below the guidance provided by RG 1.52 (Reference 58).

[[

]]

Two bounding analyses have been performed in the CLTR to evaluate decay heating in the SGTS for: 1) plants that implement AST in accordance with RG 1.183 (Reference 57), and 2) plants committed to RG 1.3 (Reference 60) for fission product transport. [[

]] The parameters and their bounding values, with a comparison to the PBAPS specific values, are shown in Table 2.5-5.

As seen in Table 2.5-5, the PBAPS SGTS design was not bounded for two of the parameters: [[ ]] These issues are discussed further below.

[[

]] the results of the PBAPS evaluation show that the actual charcoal loading of 0.0074 mg/gm is much less than the RG 1.52 (Reference 58) allowable of 2.5 mg/gm. In addition, it should be noted that the iodine (both particulate and gaseous) removal capabilities of the High Efficiency Particulate Air (HEPA) filters and the charcoal contained in the SGTS trains are not credited with respect to the post-LOCA accident scenario (based on the site AST SER – Reference 50).

[[

]] The maximum component temperature for the PBAPS evaluation is 147.8°F, which is well below the allowable component temperature. The PBAPS SGTS utilizes a deluge system to assure no desorption of radionuclides in the case of increased decay heating.

While decay heat from fission products accumulated within the system filters and charcoal adsorbers increases with the increase in thermal power, the manually operated deluge sub-system

of the SGTS will still continue to protect the system from desorption should there be a loss of system flow.

The remaining parameters used in the CLTR bounding analysis for AST application are confirmed to bound the PBAPS plant-specific values. Therefore, and considering the exceptions noted above, the PBAPS SGTS design and operation under EPU conditions is consistent with the overall CLTR disposition for the SGTS (that the ability of the SGTS to remove fission products is not adversely affected by EPU) and satisfies applicable regulatory guidance.

Conclusion

The effects of the proposed EPU on fission product control systems and structures have been reviewed. Exelon concludes that it has adequately accounted for the increase in fission products and changes in expected environmental conditions that would result from the proposed EPU. Exelon further concludes that the fission product control systems and structures will continue to provide adequate fission product removal in post-accident environments following implementation of the proposed EPU. Based on this, Exelon also concludes that the fission product control systems and structures will continue to meet the requirements of the current licensing basis. Therefore, Exelon finds the proposed EPU acceptable with respect to the fission product control systems and structures.

2.5.2.2 Main Condenser Evacuation System

Regulatory Evaluation

The main condenser evacuation system (MCES) generally consists of two subsystems: (1) the "hogging" or startup system, which initially establishes MC vacuum; and (2) the system, which maintains condenser vacuum once it has been established. The review focused on modifications to the system that may affect gaseous radioactive material handling and release assumptions, and design features to preclude the possibility of an explosion (if the potential for explosive mixtures exists). The regulatory acceptance criteria for the MCES are based on: (1) GDC-60, insofar as it requires that the plant design include means to control the release of radioactive effluents; and (2) GDC-64, insofar as it requires that means be provided for monitoring effluent discharge paths and the plant environs for radioactivity that may be released from normal operations, including AOOs and postulated accidents.

Peach Bottom Current Licensing Basis

Current GDC-60 and current GDC-64 are applicable to PBAPS as described in the NRC SER for PBAPS Unit 2 and Unit 3 ODCM License Amendments 102 and 104 (Reference 35), respectively.

The MCES is described in PBAPS UFSAR Section 11.4, "Main Condenser Gas Removal and Sealing Steam System."

Technical Evaluation

NEDC-33004P-A, Revision 4, "Constant Pressure Power Uprate," Class III, July 2003 (also referred to as CLTR) was approved by the NRC as an acceptable method for evaluating the effects of CPPUs. Section 7.2 of the CLTR addresses the effect of CPPU on the Condenser and Steam Jet Air Ejectors (SJAE). The results of this evaluation are described below.

PBAPS meets all CLTR dispositions. The topics addressed in this evaluation are:

Topic	CLTR Disposition	PBAPS Result
Condenser and SJAE	[[ ]]	Meets CLTR Disposition

The increase in steam flow increases the heat removal requirement for the condenser. The additional power level increases the noncondensable gases generated by the reactor. The MC "hogging" (mechanical vacuum pump) and the SJAE functions are required for normal plant operation and are not safety-related.

The design of the condenser air removal system is not adversely affected by EPU and no modification to the system is required. The following aspects of the condenser air removal system were evaluated for this determination:

- Non-condensable gas flow capacity of the SJAE system;
- Capability of the SJAEs to operate satisfactorily with available dilution / motive steam flow; and
- Mechanical vacuum (hogging) pump capability to remove required non-condensable gases from the condenser at EPU start-up conditions

The physical size of the primary condenser and evacuation time are the main factors in establishing the capabilities of the vacuum pumps. These parameters do not change with EPU. Because flow rates do not change, there is no change to the holdup time in the pump discharge line routed to the main vent stack. The capacity of the SJAEs is adequate because they were originally designed for operation at flows greater than those required at EPU conditions. Therefore, the MCES design bases for PBAPS are unchanged for EPU.

Conclusion

The assessment of the MCES has been reviewed. Exelon concludes that the MCES will continue to maintain its ability to control and provide monitoring for releases of radioactive materials to the environment following implementation of the proposed EPU. Exelon also concludes that the MCES will continue to meet the requirements of the current licensing basis. Therefore, Exelon finds the proposed EPU acceptable with respect to the MCES.

2.5.2.3 Turbine Gland Sealing System

Regulatory Evaluation

The turbine gland sealing system is provided to control the release of radioactive material from steam in the turbine to the environment. Exelon reviewed changes to the turbine gland sealing system with respect to factors that may affect gaseous radioactive material handling (e.g., source of sealing steam, system interfaces, and potential leakage paths). The regulatory acceptance criteria for the turbine gland sealing system are based on: (1) GDC-60, insofar as it requires that the plant design include means to control the release of radioactive effluents; and (2) GDC-64, insofar as it requires that means be provided for monitoring effluent discharge paths and the plant environs for radioactivity that may be released from normal operations, including AOOs and postulated accidents.

Peach Bottom Current Licensing Basis

Current GDC-60 and current GDC-64 are applicable to PBAPS as described in the NRC SER for PBAPS Unit 2 and Unit 3 ODCM License Amendments 102 and 104 (Reference 35), respectively.

The turbine gland sealing system is included in PBAPS UFSAR Section 11.4, "Main Condenser Gas Removal and Sealing Steam System."

Technical Evaluation

Taking into account the modification of the PBAPS main turbine to accept the increased steam flow at EPU operating conditions, the evaluation of the turbine gland sealing system demonstrated that the only potential modification required is to change straight tooth packing to slant tooth design which will be confirmed during the detailed turbine design for EPU implementation. No other hardware changes are required to support operation at EPU conditions.

Conclusion

The assessment of the turbine gland sealing system has been reviewed and has been adequately evaluated. Exelon concludes that the turbine gland sealing system will continue to maintain its ability to control and provide monitoring for releases of radioactive materials to the environment consistent with the current licensing basis. Therefore, Exelon finds the proposed EPU acceptable with respect to the turbine gland sealing system.

2.5.2.4 Main Steam Isolation Valve Leakage Control System

Regulatory Evaluation

Redundant quick-acting isolation valves are provided on each MSL. The leakage control system is designed to reduce the amount of direct, untreated leakage from the MSIVs when isolation of the primary system and containment is required.

The regulatory acceptance criteria for the MSIV leakage control system are based on GDC-54, insofar as it requires that piping systems penetrating containment be provided with leakage detection and isolation capabilities.

Peach Bottom Current Licensing Basis

Not applicable. PBAPS does not use a Main Steam Isolation Valve Leakage Control System. See Section 2.5.4.2 for a discussion of EPU effect on the holdup volume of the MSLs and MC.

Technical Evaluation

Not applicable.

Conclusion

Not applicable.

2.5.3 Component Cooling and Decay Heat Removal

2.5.3.1 Spent Fuel Pool Cooling and Cleanup System

Regulatory Evaluation

The SFP provides wet storage of spent fuel assemblies. The safety function of the SFP cooling and cleanup system is to cool the spent fuel assemblies and keep the spent fuel assemblies covered with water during all storage conditions. The review for the proposed EPU focused on the effects of the proposed EPU on the capability of the system to provide adequate cooling to the spent fuel during all operating and accident conditions. The regulatory acceptance criteria for the SFP cooling and cleanup system are based on: (1) GDC-5, insofar as it requires that SSCs important to safety not be shared among nuclear power units unless it can be shown that sharing will not significantly impair their ability to perform their safety functions; (2) GDC-44, insofar as it requires that a system with the capability to transfer heat loads from safety-related SSCs to a heat sink under both normal operating and accident conditions be provided; and (3) GDC-61, insofar as it requires that fuel storage systems be designed with RHR capability reflecting the importance to safety of decay heat removal, and measures to prevent a significant loss of fuel storage coolant inventory under accident conditions.

Peach Bottom Current Licensing Basis

The general design criteria listed in RS-001 are those currently specified in 10 CFR 50, Appendix A. The applicable PBAPS principal design criteria predate these criteria. The PBAPS principal design criteria are listed in UFSAR Section 1.5, "Principal Design Criteria." In 1967, the Atomic Energy Commission (AEC) published for public comment a revised set of proposed General Design Criteria (Federal Register 32 FR 10213 (Reference 9), July 11, 1967). Although not explicitly licensed to the AEC proposed General Design Criteria published in 1967, Philadelphia Electric Company (PECO), the predecessor to Exelon, performed a comparative evaluation of the design basis of PBAPS Units 2 and 3 against the AEC proposed General Design Criteria of 1967. The PBAPS UFSAR, Appendix H, "Conformance to AEC (NRC) Criteria," contains this comparative evaluation. UFSAR Appendix H provides a comparative

evaluation with each of the groups of criteria set out in the July 1967 AEC release. As to each group of criteria, there is a statement of Exelon's understanding of the intent of the criteria in that group and a discussion of the plant design conformance with the intent of the group of criteria. Following a restatement of each of the proposed criteria is a list of references to locations in the PBAPS UFSAR where there is subject matter relating to the intent of that particular criteria.

For the current GDC listed in the Regulatory Evaluation above, with the exception of current GDC-44, the PBAPS comparative evaluation of the comparable 1967 AEC proposed General Design Criteria (referred to here as "Draft GDC") is contained in PBAPS UFSAR Appendix H: Draft GDC-4, Draft GDC-67, Draft GDC-68, and Draft GDC-69. There is no Draft GDC directly associated with current GDC-44.

The SFP Cooling and Cleanup system is described in PBAPS UFSAR Sections 4.8, "Residual Heat Removal System," and 10.5, "Fuel Pool Cooling and Cleanup System."

In addition to the evaluations described in the PBAPS UFSAR, PBAPS's systems and components were evaluated for license renewal. Systems and system component materials of construction, operating history, and programs used to manage aging effects were evaluated for plant license renewal and documented in the "Safety Evaluation Report Related to the License Renewal of Peach Bottom Atomic Power Station, Units 2 and 3," NUREG-1769, dated March 2003 (Reference 10). The license renewal evaluation associated with the SFP Cooling and Cleanup system is documented in NUREG-1769, Section 2.3.3.2. Management of aging effects on the SFP Cooling and Cleanup system is documented in NUREG-1769, Section 3.3.2.

Technical Evaluation

NEDC-33004P-A, Revision 4, "Constant Pressure Power Uprate," Class III, July 2003 (also referred to as CLTR) was approved by the NRC as an acceptable method for evaluating the effects of CPPUs. Section 6.3 of the CLTR addresses the effect of CPPU on the Fuel Pool. The results of this evaluation are described below.

PBAPS meets all CLTR dispositions. The topics addressed in this evaluation are:

Topic	CLTR Disposition	PBAPS Result
Fuel Pool Cooling (Normal Core Offload and Full Core Offload)	[[	Meets CLTR Disposition
Crud Activity and Corrosion Products		Meets CLTR Disposition
Radiation Levels	]]	Meets CLTR Disposition

2.5.3.1.1 *Fuel Pool Cooling (Normal and Full Core Offload)*

As stated in Section 6.3.1 of the CLTR, the SFP heat load increases due to the decay heat generation as a result of EPU.

The spent fuel cooling section of the fuel pool cooling and cleanup system (FPCCS) consists of three trains of pumps and heat exchangers. Cooling water to the FPCCS heat exchangers is provided by the SW system. Additional SFP cooling is available from the RHR system, which is cooled by the HPSW system. EPU does not affect the alignments, availability or safety-related designations of these systems. EPU did not change the trains of cooling used to evaluate the effects of core offload.

EPU will increase the heat load on the FPCCS during and after refueling outages because of the increase in decay heat. The decay heat for the EPU was calculated using the formulation and uncertainty factors from ANSI/ANS-5.1-1979 with two-sigma uncertainty and correction for miscellaneous actinides and activation products. The use of ANSI/ANS-5.1-1979 is a change from the previous basis of ASB 9-2 methodology and has been endorsed in NUREG-0800 Section 9.2.5, Revision 3. The effect of this heat load on the SFP temperature was then evaluated for bounding normal offloads added to a bounding SFP heat load from previously offloaded batches. The evaluation of the normal offload credits the SW system for directly removing the decay heat from the FPCCS heat exchangers. The heat removal by the FPCCS heat exchanger is conservatively based on a SW temperature of 90°F. The result of this conservative evaluation shows that, using the FPCCS alone, the SFP temperature can be maintained below 140°F with all 3 trains in service. With a single failure, the FPCCS would maintain the SFP temperature below 150°F. In practice, lower cooling water temperatures and adjusting the offload schedule can result in lower peak SFP temperatures. In addition, a full-core offload was evaluated using the RHR system. The RHR system in fuel pool cooling assist mode, assuming a HPSW temperature of 92°F, can maintain the SFP temperature below 140°F for a full-core offload.

Maintaining the SFP temperature within design limits for the normal and full-core offloads is accomplished through existing administrative and procedural limitations that require cycle-specific core offload evaluations prior to initiating the core offload.

Table 2.5-6 summarizes the three conservative, bounding SFP cooling evaluations: Normal offload with full FPCCS capability, full-core offload with RHR cooling, and a normal offload with a single failure in the FPCCS. The predicted boil-off rates remain within the available makeup capability. The worst-case makeup requirement occurs when all cooling is lost after a full-core offload. If this condition occurs, Refueling Water, Demineralized Water, and Condensate can each be aligned to provide sufficient makeup to maintain SFP level within one hour using only valve and pump manipulations. Other, lower capacity, systems are available within one hour, and other high capacity systems are available after one hour. The heating rate is sufficiently slow to allow operator actions to initiate makeup prior to the SFP reaching boiling.

The FPCCS remains capable of performing its required safety functions after EPU implementation. Therefore, Fuel Pool Cooling meets all CLTR dispositions.

2.5.3.1.2 *Crud Activity and Corrosion Products*

As stated in Section 6.3.2 of the CLTR, crud activity and corrosion products associated with spent fuel can increase slightly due to power uprate. The amount of crud activity and pool quality are operational considerations and are unrelated to safety. An evaluation of the capability of the FPCCS to maintain water clarity concludes that water clarity will not be affected by EPU. Therefore, the Crud Activity and Corrosion Products meet all CLTR dispositions.

2.5.3.1.3 *Radiation Levels*

As stated in Section 6.3.3 of the CLTR, the normal radiation levels around the SFP may increase slightly, primarily during fuel handling operations. Radiation levels in those areas of the plant, which are directly affected by the reactor core and spent fuel, increase by the percentage increase in the average power density of the fuel bundles. Therefore, for an EPU increase of 15%, the radiation dose rates increase by 15%. The radiation level around the SFP is an operational consideration and is unrelated to safety. This increase is acceptable compared to worst case area dose limits.

The design of SFPs is typically very conservative from the perspective of radiation exposure such that changes in the fuel inventory/bundle surface dose rate of 15% results in inconsequential changes in operating dose. The current PBAPS radiation procedures and radiation-monitoring program would detect any changes in radiation levels and initiate appropriate actions. Therefore, the radiation levels around the SFP meet all CLTR dispositions.

Conclusion

The SFP cooling and cleanup system has been assessed and the effects of the proposed EPU on the SFP cooling function of the system have been adequately evaluated. Based on this review, Exelon concludes that the SFP cooling and cleanup system will continue to provide sufficient cooling capability to cool the SFP following implementation of the proposed EPU and will continue to meet the requirements of the current licensing basis. Therefore, Exelon finds the proposed EPU acceptable with respect to the SFP cooling and cleanup system.

2.5.3.2 Station Service Water Systems

Regulatory Evaluation

The ESW system, as defined at PBAPS, provides essential cooling to safety-related equipment and may also provide cooling to non-safety-related auxiliary components that are used for normal plant operation. The review covered the characteristics of the ESW components with respect to their functional performance as affected by adverse operational (i.e., water hammer) conditions, abnormal operational conditions, and accident conditions (e.g., a LOCA with the LOOP). The review focused on the additional heat load that would result from the proposed EPU. The regulatory acceptance criteria are based on: (1) GDC-4, insofar as it requires that SSCs important to safety be designed to accommodate the effects of and to be compatible with

the environmental conditions associated with normal operation, including flow instabilities and loads (e.g., water hammer), maintenance, testing, and postulated accidents; (2) GDC-5, insofar as it requires that SSCs important to safety not be shared among nuclear power units unless it can be shown that sharing will not significantly impair their ability to perform their safety functions; and (3) GDC-44, insofar as it requires that a system with the capability to transfer heat loads from safety-related SSCs to a heat sink under both normal operating and accident conditions be provided.

Peach Bottom Current Licensing Basis

The general design criteria listed in RS-001 are those currently specified in 10 CFR 50, Appendix A. The applicable PBAPS principal design criteria predate these criteria. The PBAPS principal design criteria are listed in UFSAR Section 1.5, "Principal Design Criteria." In 1967, the Atomic Energy Commission (AEC) published for public comment a revised set of proposed General Design Criteria (Federal Register 32 FR 10213 (Reference 9), July 11, 1967). Although not explicitly licensed to the AEC proposed General Design Criteria published in 1967, Philadelphia Electric Company (PECO), the predecessor to Exelon, performed a comparative evaluation of the design basis of PBAPS Units 2 and 3 against the AEC proposed General Design Criteria of 1967. The PBAPS UFSAR, Appendix H, "Conformance to AEC (NRC) Criteria," contains this comparative evaluation. UFSAR Appendix H provides a comparative evaluation with each of the groups of criteria set out in the July 1967 AEC release. As to each group of criteria, there is a statement of Exelon's understanding of the intent of the criteria in that group and a discussion of the plant design conformance with the intent of the group of criteria. Following a restatement of each of the proposed criteria is a list of references to locations in the PBAPS UFSAR where there is subject matter relating to the intent of that particular criteria.

For the current GDC listed in the Regulatory Evaluation above, with the exception of current GDC-44, the PBAPS comparative evaluation of the comparable 1967 AEC proposed General Design Criteria (referred to here as "Draft GDC") is contained in PBAPS UFSAR Appendix H: Draft GDC-4, Draft GDC-40, and Draft GDC-42. There is no Draft GDC directly associated with current GDC-44.

The PBAPS design includes three open loop cooling water systems. The SW system supplies water to the Reactor and Turbine Buildings for cooling. Cross connections in the SW system are provided to supply cooling water to the ECCS and RCIC Pump Room Coolers, and CS Pump Motor Oil Coolers when off-site power is available. The SW system is non-safety related and is not credited in the licensing basis for any safety-related function.

The Station Service Water System is described in PBAPS UFSAR Section 10.6, "Service Water System."

The HPSW system is provided to remove the heat rejected by the RHR system during normal shutdown and accident operations. In addition, this system provides a source of water for the RHR-HPSW cross connection. The HPSW system is described in PBAPS UFSAR Section 10.7, "High-Pressure System Service Water System."

The ESW system is provided to remove the heat rejected by the equipment that must operate under accident conditions. The ESW system is described in PBAPS UFSAR Section 10.9, "Emergency Service Water System."

In addition to the evaluations described in the PBAPS UFSAR, PBAPS's systems and components were evaluated for license renewal. Systems and system component materials of construction, operating history, and programs used to manage aging effects were evaluated for plant license renewal and documented in the "Safety Evaluation Report Related to the License Renewal of Peach Bottom Atomic Power Station, Units 2 and 3," NUREG-1769, dated March 2003 (Reference 10). The license renewal evaluation associated with the HPSW system and ESW system is documented in NUREG-1769, Sections 2.3.3.5 and 2.3.3.6, respectively. Management of aging effects on the HPSW system and ESW system is documented in NUREG-1769, Sections 3.3.5 and 3.3.6, respectively. Management of aging effects on the Service Water system is documented in Table 2.1.2-3-2 and subsequent tables in Reference 37. PBAPS's current licensing basis regarding GL 89-13 is discussed in Section 3.0.3.15.

Technical Evaluation

NEDC-33004P-A, Revision 4, "Constant Pressure Power Uprate," Class III, July 2003 (also referred to as CLTR) was approved by the NRC as an acceptable method for evaluating the effects of CPPUs. Section 6.4 of the CLTR addresses the effect of CPPU on Water System Performance. The results of this evaluation are described below.

The non-safety related SW system provides screened and chlorinated once through cooling water to various non-safety related plant systems and components during normal plant operation and shutdown periods. The SW system also supplies cooling water to the core standby cooling equipment and space coolers during normal plant operation and during shutdown periods only when offsite power is available. The SW system includes pumps, valves, piping and instrumentation that provide cooling and makeup water to various non-safety related systems and components, including the TBCCW heat exchangers and RBCCW heat exchangers.

The ESW system includes pumps, valves, piping and instrumentation to provide cooling water from the Emergency Cooling Tower (Section 2.5.3.4) or the Conowingo Pond to various safety-related plant systems and components. The ESW is safety-related and is designed to operate during design flood conditions and loss of the Conowingo Pond, and during LOOP conditions. The ESW system picks up safety-related cooling loads normally handled by SW during periods of LOOP and/or accident conditions. In order to transfer loads from these non-safety related systems, safety-related isolation valves are provided to isolate the non-safety related portion of the systems.

The HPSW system pumps and associated piping and valves are safety-related and provide cooling water to the RHR heat exchangers during normal shutdown, flood conditions, and other post-accident conditions (LOOP, LOCA).

The adjustable speed drive (ASD) installation (see PBAPS EPU LAR Attachment 9, Section 2, for additional information) will isolate the MG set fluid coupling oil coolers from operation and

may place in service a new heat exchanger using SW to cool the ASD internal cooling water. The SW heat load for ASD is bounded by the MG set oil cooler load, which is eliminated. The addition of the new heat exchangers has no negative impact on the station service water system flow requirements because the MG Set Oil coolers, which have a higher flow requirement, will be removed.

PBAPS meets all CLTR dispositions. The topics addressed in this evaluation are:

Topic	CLTR Disposition	PBAPS Result
Water Systems Performance (Safety-Related)	[[	Meets CLTR Disposition
Water Systems Performance (Normal Operation)		Meets CLTR Disposition
Suppression Pool Cooling (RHR Service Operation)	]]	Meets CLTR Disposition

2.5.3.2.1 *Water System Performance (Safety-Related)*

As explicitly stated in Section 6.4 of the CLTR, EPU results in a greater decay heat rate which increases the safety-related water systems cooling requirement during accident conditions. The performance of the ESW during and immediately following the most limiting design basis event, the LOCA, [[ ]] The HPSW (non-DBA emergency shutdown) heat loads will increase slightly due to EPU. For normal shutdown, the maximum HPSW heat loads will not increase for EPU because the initiating pressure and temperature are not changing for EPU.

The safety-related portions of the HPSW and ESW systems are designed to provide a reliable supply of cooling water during and following a DBA, design basis flood or LOOP conditions, for the following essential equipment and systems:

Services which have increased heat loads with EPU:

- RHR System Heat Exchangers

Services for which heat loads are not dependent on RTP:

- EDG Heat Exchangers (Jacket Water, Air, and Lube Oil Coolers)
- RHR Pumps Room Coolers
- RCIC Pump Room Coolers
- HPCI Pump Room Coolers
- CS Pump Room Coolers

- CS Pump Motor Oil Coolers

The ESW and HPSW systems were evaluated for changes due to EPU and are adequate as currently designed. Therefore, the ESW and HPSW meet all CLTR dispositions.

2.5.3.2.2 *Water System Performance (Normal Operation)*

As stated in Section 6.4 of the CLTR, EPU results in an increased heat load during normal operation.

The increased non-safety related SW system heat loads at PBAPS are due primarily to the increased SFP cooling decay heat load, generator hydrogen and stator coolers, Alterrex air coolers, reactor feed pump oil coolers, certain turbine building area coolers, and the TBCCW and RBCCW heat exchangers. Plant modifications to rerate the main generator are being implemented to accommodate EPU. The Generator Rotor Modifications will ensure that the SW flow demands for generator stator and hydrogen cooling will be satisfied.

Therefore, Water System performance during normal operation meets all CLTR dispositions.

2.5.3.2.3 *Suppression Pool Cooling (RHR Service Operation)*

As stated in Section 6.4 of the CLTR, EPU results in a greater decay heat rate. The containment cooling analysis in Section 2.6.5 shows that the post-LOCA RHR heat load increases due in part to an increase in reactor decay heat. The post-LOCA containment and suppression pool responses have been calculated based on an energy balance between the post-LOCA heat loads and the heat removal capacity of the RHR and HPSW. As discussed in Sections 2.6.1 and 2.6.5, in order to eliminate credit for CAP to maintain RHR and CS pump NPSH margin following a LOCA, an RHR heat exchanger cross-tie modification will be implemented for EPU. This modification will enable the operator to align a second RHR heat exchanger for post-LOCA containment heat removal. The additional cooling capacity results in a peak suppression pool temperature at EPU that is lower than the current peak temperature at CLTP. The effect on HPSW is that a second HPSW pump will be utilized to supply cooling water flow to the second RHR heat exchanger on the LOCA unit. There is no increase in the required design HPSW flow to any RHR heat exchanger; the combined HPSW flow rate to two RHR heat exchangers is adequate for SPC at EPU conditions. The containment cooling analysis and equipment review demonstrate that the suppression pool temperature can be maintained within acceptable limits in the post-accident condition at EPU based on the existing capability of the HPSW system. As discussed in Section 2.5.3.2.1, the HPSW system transfers heat to the Ultimate Heat Sink (UHS), which is addressed in Section 2.5.3.4. Therefore, SPC meets all CLTR dispositions.

Conclusion

The effects of the proposed EPU on the station service water system have been adequately evaluated for the increased heat loads on system performance that would result from the proposed EPU. Exelon concludes the station service water system will continue to be protected from the dynamic effects associated with flow instabilities and provide sufficient cooling for SSCs important to safety following implementation of the proposed EPU. Therefore, Exelon has

determined that the station service water system will continue to meet the requirements of the current licensing basis. Based on the above, Exelon finds the proposed EPU acceptable with respect to the station service water system.

2.5.3.3 Reactor Auxiliary Cooling Water Systems

Regulatory Evaluation

The review covered reactor auxiliary cooling water systems that are required for: (1) safe shutdown during normal operations, AOOs, and mitigating the consequences of accident conditions; or (2) preventing the occurrence of an accident. These systems include closed-loop auxiliary cooling water systems for reactor system components, reactor shutdown equipment, ventilation equipment, and components of the ECCS. The review covered the capability of the auxiliary cooling water systems to provide adequate cooling water to safety-related ECCS components and reactor auxiliary equipment for all planned operating conditions. Emphasis was placed on the cooling water systems for safety-related components (e.g., ECCS equipment, ventilation equipment, and reactor shutdown equipment). The review focused on the additional heat load that would result from the proposed EPU. The regulatory acceptance criteria for the reactor auxiliary cooling water system are based on: (1) GDC-4, insofar as it requires that SSCs important to safety be designed to accommodate the effects of and to be compatible with the environmental conditions associated with normal operation, including flow instabilities and attendant loads (i.e., water hammer), maintenance, testing, and postulated accidents; (2) GDC-5, insofar as it requires that SSCs important to safety not be shared among nuclear power units unless it can be shown that sharing will not significantly impair their ability to perform their safety functions; and (3) GDC-44, insofar as it requires that a system with the capability to transfer heat loads from safety-related SSCs to a heat sink under both normal operating and accident conditions be provided.

Peach Bottom Current Licensing Basis

The general design criteria listed in RS-001 are those currently specified in 10 CFR 50, Appendix A. The applicable PBAPS principal design criteria predate these criteria. The PBAPS principal design criteria are listed in UFSAR Section 1.5, "Principal Design Criteria." In 1967, the Atomic Energy Commission (AEC) published for public comment a revised set of proposed General Design Criteria (Federal Register 32 FR 10213 (Reference 9), July 11, 1967). Although not explicitly licensed to the AEC proposed General Design Criteria published in 1967, Philadelphia Electric Company (PECO), the predecessor to Exelon, performed a comparative evaluation of the design basis of PBAPS Units 2 and 3 against the AEC proposed General Design Criteria of 1967. The PBAPS UFSAR, Appendix H, "Conformance to AEC (NRC) Criteria," contains this comparative evaluation. UFSAR Appendix H provides a comparative evaluation with each of the groups of criteria set out in the July 1967 AEC release. As to each group of criteria, there is a statement of Exelon's understanding of the intent of the criteria in that group and a discussion of the plant design conformance with the intent of the group of criteria. Following a restatement of each of the proposed criteria is a list of references to locations in the PBAPS UFSAR where there is subject matter relating to the intent of that particular criteria.

For the current GDC listed in the Regulatory Evaluation above, with the exception of current GDC-44, the PBAPS comparative evaluation of the comparable 1967 AEC proposed General Design Criteria (referred to here as "Draft GDC") is contained in PBAPS UFSAR Appendix H: Draft GDC-4, Draft GDC-40, and Draft GDC-42. There is no Draft GDC directly associated with GDC-44.

The PBAPS design includes one closed loop cooling water system. The RBCCW system is designed to remove heat from the reactor auxiliary systems equipment and their accessories.

The RBCCW system is described in PBAPS UFSAR Section 10.8, "Reactor Building Cooling Water System."

The ESW system is capable of transferring the resulting heat loads from the safety-related equipment normally supplied by the station service water system. In the event of extreme high or low Conowingo Pond level, the ESW system can be shifted to closed cycle operation through the use of the emergency cooling water (ECW) system. The ESW and ECW systems are safety-related systems.

"System interconnections are provided to enable the ESW system to serve the reactor building cooling water heat exchangers in the event of a loss of off-site power" (UFSAR Section 10.6). "The reactor building cooling water system can also supply water to the fuel pool cooling heat exchangers, via removable spool pieces, in the event of loss of normal cooling water. The control and instrumentation is designed for remote system startup from the main CR. These design features do exist although the heat sink, ESW, for the RBCCW system has been eliminated as a result of locking closed the ESW-RBCCW cross tie valves. These valves were locked closed because of the lack of required structural design of the piping, and due to the adverse hydraulic effects to safety-related components served by ESW. Therefore, the cooling effect of the RBCCW system to any of the components described above will be minimal." (UFSAR Section 10.8.3) The RBCCW system is a non-safety related auxiliary system.

In addition to the evaluations described in the PBAPS UFSAR, PBAPS's systems and components were evaluated for license renewal. Systems and system component materials of construction, operating history, and programs used to manage aging effects were evaluated for plant license renewal and documented in the "Safety Evaluation Report Related to the License Renewal of Peach Bottom Atomic Power Station, Units 2 and 3," NUREG-1769, dated March 2003 (Reference 10). Management of the effects of aging on the RBCCW system is documented in Table 2.1.2-3-2 and subsequent tables of Reference 37. PBAPS's current licensing basis regarding GL 89-13 is discussed in Section 3.0.3.15.

Technical Evaluation

NEDC-33004P-A, Revision 4, "Constant Pressure Power Uprate," Class III, July 2003 (also referred to as CLTR) was approved by the NRC as an acceptable method for evaluating the effects of CPPUs. Section 6.4 of the CLTR addresses the effect of CPPU on Water Systems. The results of this evaluation are described below.

PBAPS meets all CLTR dispositions. The topics addressed in this evaluation are:

Topic	CLTR Disposition	PBAPS Result
Water Systems Performance (non-safety related)	[[ ]]	Meets CLTR Disposition

The non-safety related Reactor Auxiliary Cooling Water systems include the RBCCW system and the TBCCW system. The safety-related water systems are evaluated in Section 2.5.3.2, Station Service Water Systems.

Reactor Building Closed Cooling Water System

The RBCCW heat loads are mainly dependent on the reactor vessel temperature and/or flow rates in the systems cooled by the RBCCW. The flow rates in the systems cooled by the RBCCW (e.g., Reactor Recirculation and RWCU pumps cooling) do not change due to power uprate and therefore, are not affected by power uprate. The only significant increase in heat load due to EPU is an increase in SFP Cooling heat load. The normal cooling water supply for the SFP is provided by the SW system and not the RBCCW system. The RBCCW heat load during SFP cooling for normal refueling is 17.5 MBTU/hr at CLTP. This load would increase to 27.0 MBTU/hr at EPU, which remains below the RBCCW system heat exchanger capacity of 51.0 MBTU/hr for two heat exchanger operation for SFP Cooling. This SFP Cooling heat load occurs during refueling when other RBCCW loads are offline or significantly reduced. Therefore, the increase in SFP Cooling heat load does not increase RBCCW system heat loads beyond system design. The operation of the remaining equipment cooled by the RBCCW (e.g., sample coolers and drain coolers) is not power-dependent and is not affected by power uprate. There are negligible changes to system operating temperatures and pressures as a result of EPU. There are no changes to RBCCW system operation. The RBCCW system contains sufficient redundancy in pumps and heat exchangers to ensure that adequate heat removal capability is available during normal operation. Sufficient heat removal capacity is available to accommodate the small increase in heat load due to EPU.

The PBAPS response to GL 96-06 credited the RBCCW head tank with maintaining an overpressure on the containment air coolers to prevent water hammer under DBA conditions. Evaluation of the impact of EPU on the RBCCW system, the DW ventilation system, and the reactor building ventilation system indicates that an overpressure in the cooling water lines will still be maintained, thereby preventing water hammer under DBA conditions.

Therefore, the RBCCW system meets all CLTR dispositions.

Turbine Building Closed Loop Cooling Water System

The supply temperature of the TBCCW system is dependent on the heat rejected to the TBCCW system via components cooled by the system, as removed by the TBCCW heat exchangers. Some heat loads on the TBCCW system are power-dependent and are increased by power uprate,

such as those related to the condensate pumps and Iso-Phase Bus Duct coolers. The TBCCW heat exchanger is capable of removing system heat loads at EPU with margin. Based on the proposed modifications to the Iso-Phase Bus Ducts for EPU, the increase in heat load on the TBCCW system can be accommodated by the margin in the system heat exchangers for single heat exchanger operation. With isophase bus modifications, the TBCCW heat exchangers will still maintain the required heat exchanger outlet temperature below its design limit of 100°F with margin at EPU. Therefore, the TBCCW system is expected to meet the requirements of the system with respect to heat loads due to EPU. There are no changes to TBCCW system flow rates as a result of Iso-Phase Bus Duct cooler modifications. Therefore, TBCCW meets all CLTR dispositions.

Conclusion

The effects of the proposed EPU on the reactor auxiliary cooling water systems have been adequately evaluated for the increased heat loads from the proposed EPU on system performance. Exelon concludes that the reactor auxiliary cooling water systems will continue to be protected from the dynamic effects associated with flow instabilities and provide sufficient cooling for SSCs important to safety following implementation of the proposed EPU. Therefore, Exelon has determined that the reactor auxiliary cooling water systems will continue to meet the requirements of the current licensing basis. Based on the above, Exelon finds the proposed EPU acceptable with respect to the reactor auxiliary cooling water systems.

2.5.3.4 Ultimate Heat Sink

Regulatory Evaluation

The UHS is the source of cooling water provided to dissipate reactor decay heat and essential cooling system heat loads after a normal reactor shutdown or a shutdown following an accident. The review focused on the impact that the proposed EPU has on the decay heat removal capability of the UHS. Additionally, the review included evaluation of the design-basis UHS temperature limit determination to confirm that post-licensing data trends (e.g., air and water temperatures, humidity, wind speed, water volume) do not establish more severe conditions than previously assumed. The regulatory acceptance criteria for the UHS are based on: (1) GDC-5, insofar as it requires that SSCs important to safety not be shared among nuclear power units unless it can be shown that sharing will not significantly impair their ability to perform their safety functions; and (2) GDC-44, insofar as it requires that a system with the capability to transfer heat loads from safety-related SSCs to a heat sink under both normal operating and accident conditions be provided.

Peach Bottom Current Licensing Basis

The general design criteria listed in RS-001 are those currently specified in 10 CFR 50, Appendix A. The applicable PBAPS principal design criteria predate these criteria. The PBAPS principal design criteria are listed in UFSAR Section 1.5, "Principal Design Criteria." In 1967, the Atomic Energy Commission (AEC) published for public comment a revised set of proposed General Design Criteria (Federal Register 32 FR 10213 (Reference 9), July 11, 1967). Although

not explicitly licensed to the AEC proposed General Design Criteria published in 1967, Philadelphia Electric Company (PECO), the predecessor to Exelon, performed a comparative evaluation of the design basis of PBAPS Units 2 and 3 against the AEC proposed General Design Criteria of 1967. The PBAPS UFSAR, Appendix H, "Conformance to AEC (NRC) Criteria," contains this comparative evaluation. UFSAR Appendix H provides a comparative evaluation with each of the groups of criteria set out in the July 1967 AEC release. As to each group of criteria, there is a statement of Exelon's understanding of the intent of the criteria in that group and a discussion of the plant design conformance with the intent of the group of criteria. Following a restatement of each of the proposed criteria is a list of references to locations in the PBAPS UFSAR where there is subject matter relating to the intent of that particular criteria.

For the current GDC listed in the Regulatory Evaluation above, with the exception of current GDC-44, the PBAPS comparative evaluation of the comparable 1967 AEC proposed General Design Criteria (referred to here as "Draft GDC") is contained in PBAPS UFSAR Appendix H: Draft GDC-4, Draft GDC-41, and Draft GDC-52. There is no Draft GDC directly associated with current GDC-44.

The Conowingo Pond serves as the UHS for the plant. The UHS temperature limit is described in PBAPS TS 3.7.2, "Emergency Service Water (ESW) System and Normal Heat Sink" and the corresponding TS Bases.

Technical Evaluation

NEDC-33004P-A, Revision 4, "Constant Pressure Power Uprate," Class III, July 2003 (also referred to as CLTR) was approved by the NRC as an acceptable method for evaluating the effects of CPPUs. Section 6.4 of the CLTR addresses the effect of CPPU on the UHS. The results of this evaluation are described below.

At PBAPS, the UHS is the normal heat sink, which is the Conowingo Pond. The maximum allowable supply temperature from the normal heat sink (92°F) is governed by limits established in TS 3.7.2. The normal heat sink temperature limit is not affected by EPU. EPU will have no impact on the normal heat sink as a source of cooling water for ESW systems which dissipate reactor decay heat and essential cooling loads after a normal reactor shutdown or shutdown following an accident.

The PBAPS design includes an Emergency Heat Sink, as described in FSAR Section 10.24, which provides heat removal capability for safe reactor shutdown in the event the normal heat sink (Conowingo Pond) is unavailable due to flooding or loss of the Conowingo Dam. The PBAPS Emergency Heat Sink (Emergency Cooling Towers) consists of three mechanical draft cooling towers, each capable of handling the heat transfer duty of one RHR heat exchanger (one HPSW pump) plus the plant auxiliary cooling requirement (one ESW pump). The Emergency Cooling Towers are not used during normal plant operation. The Emergency Cooling Towers provide a reliable source of cooling water in the event that the normal heat sink from the Conowingo Pond is lost. The Emergency Heat Sink for PBAPS is designed to supply water at

90°F maximum. The Emergency Cooling Tower basins are required to maintain a reserve water supply for 7 days post-accident operation without replenishment.

The Station Service Water Systems (see 2.5.3.2) use the Ultimate and Emergency heat sinks to provide cooling water during accident and shutdown. They are capable of meeting their requirements at EPU with these heat sinks.

PBAPS meets all CLTR dispositions. The topics addressed in this evaluation are:

Topic	CLTR Disposition	PBAPS Result
Ultimate Heat Sink	[[ ]]	Meets CLTR Disposition

As explicitly stated in Section 6.4 of the CLTR, EPU results in increased heat load during normal operation and in a greater decay heat rate, which increases the safety-related water systems cooling requirements during accident conditions.

The major RHR heat exchanger heat load increase, along with other smaller increases discussed in Section 2.5.3.2, must be accommodated by the normal and emergency heat sinks at EPU. The normal and emergency heat sinks are operated so that none of the present limits (e.g., normal heat sink temperature and minimum cooling tower basin water level) are changed as a result of EPU.

The Emergency Cooling Towers were evaluated for their capability to handle the increased EPU heat load for a 7-day period. The evaluation demonstrates that the towers can maintain the temperature of the water supplied within the maximum design basis temperature of 90°F during all modes of required operation, and can maintain sufficient water inventory for a 7-day period without makeup. In addition, EPU will have no impact on the normal heat sink temperature limits or design function. Therefore, both the normal heat sink (UHS) and emergency heat sink meet all CLTR dispositions.

Conclusion

The effects that the proposed EPU would have on the UHS safety function, including the validation of the design-basis UHS temperature limit based on post-licensing data, have been reviewed. Exelon concludes that the proposed EPU will not compromise the design-basis safety function of the UHS, and that the UHS will continue to satisfy the requirements of the current licensing basis following implementation of the proposed EPU. Therefore, Exelon finds the proposed EPU acceptable with respect to the UHS.

2.5.4 Balance-of-Plant Systems

2.5.4.1 Main Steam

Regulatory Evaluation

The main steam supply system (MSSS) transports steam from the NSSS to the power conversion system and various safety-related and non-safety-related auxiliaries. The review focused on the effects of the proposed EPU on the system's capability to transport steam to the power conversion system, provide heat sink capacity, supply steam to drive safety system pumps, and withstand adverse dynamic loads (e.g., water steam hammer resulting from rapid valve closure and relief valve fluid discharge loads). The regulatory acceptance criteria for the MSSS are based on: (1) GDC-4, insofar as it requires that SSCs important to safety be protected against dynamic effects, including the effects of missiles, pipe whip, and JI forces associated with pipe breaks; (2) GDC-5, insofar as it requires that SSCs important to safety not be shared among nuclear power units unless it can be shown that sharing will not significantly impair their ability to perform their safety functions; and (3) GDC-34, insofar as it requires that a RHR system be provided to transfer fission product decay heat and other residual heat from the reactor core at a rate such that SAFDLs and the design conditions of the RCPB are not exceeded.

Peach Bottom Current Licensing Basis

The general design criteria listed in RS-001 are those currently specified in 10 CFR 50, Appendix A. The applicable PBAPS principal design criteria predate these criteria. The PBAPS principal design criteria are listed in UFSAR Section 1.5, "Principal Design Criteria." In 1967, the Atomic Energy Commission (AEC) published for public comment a revised set of proposed General Design Criteria (Federal Register 32 FR 10213 (Reference 9), July 11, 1967). Although not explicitly licensed to the AEC proposed General Design Criteria published in 1967, Philadelphia Electric Company (PECO), the predecessor to Exelon, performed a comparative evaluation of the design basis of PBAPS Units 2 and 3 against the AEC proposed General Design Criteria of 1967. The PBAPS UFSAR, Appendix H, "Conformance to AEC (NRC) Criteria," contains this comparative evaluation. UFSAR Appendix H provides a comparative evaluation with each of the groups of criteria set out in the July 1967 AEC release. As to each group of criteria, there is a statement of Exelon's understanding of the intent of the criteria in that group and a discussion of the plant design conformance with the intent of the group of criteria. Following a restatement of each of the proposed criteria is a list of references to locations in the PBAPS UFSAR where there is subject matter relating to the intent of that particular criteria.

For the current GDC listed in the Regulatory Evaluation above, the PBAPS comparative evaluation of the comparable 1967 AEC proposed General Design Criteria (referred to here as "Draft GDC") is contained in PBAPS UFSAR Appendix H: Draft GDC-4, Draft GDC-40, and Draft GDC-42. There is no Draft GDC directly associated with current GDC-34.

MS piping is discussed in UFSAR Sections 4, "Reactor Coolant System," 7.2, "Reactor Protection Systems," 7.12, "Process Radiation Monitoring," Appendix A, "Pressure Integrity of

Piping and Equipment Pressure Parts," and Appendix A.10.8, "Design Description of Main Steam Line Restraints."

In addition to the evaluations described in the PBAPS UFSAR, PBAPS's systems and components were evaluated for license renewal. Systems and system component materials of construction, operating history, and programs used to manage aging effects were evaluated for plant license renewal and documented in the "Safety Evaluation Report Related to the License Renewal of Peach Bottom Atomic Power Station, Units 2 and 3," NUREG-1769, dated March 2003 (Reference 10). The license renewal evaluation associated with the MS piping is documented in NUREG-1769, Section 2.3.4.1. Management of the effects of aging on the MS piping is documented in NUREG-1769, Section 3.4.1.

Technical Evaluation

The heat balance for the EPU conditions is provided in Section 1.3. The heat balance shows the transport of steam to the power conversion equipment, the heat sink, and to steam driven components. FIV and structural loading of the MS system piping and supports is addressed in Sections 2.2.2. Dynamic loading from water hammer is discussed below. SRV dynamic loads are discussed in Sections 2.2.2 and 2.2.3. The function and capability of the MSIVs are discussed in Section 2.2.2. SRV setpoint tolerance and FIV effects are discussed below.

2.5.4.1.1 Structural Evaluation of Main Steam Piping

NEDC-33004P-A, Revision 4, "Constant Pressure Power Uprate," Class III, July 2003 (also referred to as CLTR) was approved by the NRC as an acceptable method for evaluating the effects of CPPUs. Section 3.4.1 of the CLTR addresses the effect of CPPU on FIV in the MSL. The results of this evaluation are described below.

PBAPS meets all CLTR dispositions. The topics addressed in this evaluation are:

Topic	CLTR Disposition	PBAPS Result
Structural Evaluation of Main Steam Piping	[[ ]]	Meets CLTR Disposition

The CLTR states that because the MS piping pressures and temperatures are not affected by EPU, there is no effect on the analyses for these parameters. Seismic inertia loads, seismic building displacement loads, and SRV discharge loads are not affected by EPU, thus, there is no effect on the analyses for these load cases. The increase in MS flow results in increased forces from the TSVC transient. The TSVC loads bound the MSIV closure loads because the MSIV closure time is significantly longer than the stop valve closure time.

The capability of the MS piping to withstand dynamic loads at EPU conditions was evaluated. A summary of the results of the MS piping system evaluation that contains the increased loading associated with EPU conditions (i.e. temperature, pressure, and flow, including the effects of the

MS flow induced transient loads at EPU conditions) along with a comparison to the code allowable limits is provided in Section 2.2.2.

SRV setpoint tolerance is independent of an EPU. PBAPS transient analyses conservatively bound the existing SRV setpoint tolerance ALs. Actual historical in-service surveillance of SRV setpoint performance test results are monitored separately for compliance to the TSs and IST program.

The in-service surveillance testing of PBAPS's SRVs has not shown an indication for high setpoint drift greater than 3%.

Increased MSL flow may affect vibration of the piping during normal operation. The vibration frequency, extent, and magnitude depend upon plant-specific parameters, valve locations, the valve design, and piping support arrangements. The effects of EPU on FIV of the piping will be assessed by vibration testing during initial plant operation at the higher steam flow rates. This topic is addressed in Section 2.2.2.1.2. EPU LAR Attachment 13 contains details of the vibration monitoring program.

FIV may increase incidents of SRV leakage. PBAPS currently has procedures and installed instrumentation in place to detect and take actions concerning SRV seat leakage. These procedures and installed instrumentation are considered acceptable for monitor for SRV seat leakage at EPU rated steam flow conditions. PBAPS performed analyses and will perform testing which investigates and addresses the potential for acoustic resonance due to the increased steam flow past the SRV standpipes, as well as other branch connections, and to conclude that the onset of SRV standpipe vortex shedding acoustic resonance could be expected beyond EPU power steam flow rates. The analysis and testing are to ensure that SRV vibration resulting from acoustic resonance is not expected at EPU operating conditions.

Therefore, the structural evaluation of MS piping meets all CLTR dispositions.

2.5.4.1.2 Main Steam Line Flow Restrictors

NEDC-33004P-A, Revision 4, "Constant Pressure Power Uprate," Class III, July 2003 (also referred to as CLTR) was approved by the NRC as an acceptable method for evaluating the effects of CPPUs. Section 3.7 of the CLTR addresses the effect of CPPU on the MSL flow restrictors. The results of this evaluation are described below.

PBAPS meets all CLTR dispositions. The topics addressed in this evaluation are:

Topic	CLTR Disposition	PBAPS Result
Structural Integrity	[[ ]]	Meets CLTR Disposition

The CLTR states that at uprated power, the flow restrictors are required to pass a higher flow rate, which will result in an increased pressure drop.

The increase in steam flow rate has no significant effect on flow restrictor erosion. There is no effect on the structural integrity of the MSL flow element (restrictor) due to the increased differential pressure because the restrictors were designed and analyzed for the choke flow condition.

After a postulated steam line break outside containment, the fluid flow in the broken steam line increases until it is limited by the MSL flow restrictor. [[

]]

The PBAPS restrictors were originally analyzed for these flow conditions and therefore the restrictors remain within the acceptable calculated differential pressure drop and choke flow limits under EPU conditions. Therefore, the flow restrictors meet all CLTR dispositions.

Conclusion

The effects of the proposed EPU on the MSSS have been reviewed and the effects of changes in plant conditions on the design of the MSSS have been adequately evaluated. Exelon concludes that the MSSS will maintain its ability to transport steam to the power conversion system, provide heat sink capacity, supply steam to steam-driven safety pumps, and withstand steam hammer. Exelon further concludes that the MSSS will continue to meet the requirements of the current licensing basis. Therefore, Exelon finds the proposed EPU acceptable with respect to the MSSS.

2.5.4.2 Main Condenser

Regulatory Evaluation

The MC system is designed to condense and deaerate the exhaust steam from the main turbine and provide a heat sink for the TBS. The review focused on the effects of the proposed EPU on the steam bypass capability with respect to load rejection assumptions, and on the ability of the MC system to withstand the blowdown effects of steam from the TBS. The regulatory acceptance criteria for the MC system are based on GDC-60, insofar as it requires that the plant design include means to control the release of radioactive effluents.

Peach Bottom Current Licensing Basis

Current GDC-60 is applicable to PBAPS as described in the NRC SER for PBAPS Unit 2 and Unit 3 ODCM License Amendments 102 and 104 (Reference 35), respectively.

The MC system is described in PBAPS UFSAR Sections 4, "Reactor Coolant System," 11.3, "Main Condenser System," and 14.9, "Evaluations Using AEC Methods."

In addition to the evaluations described in the PBAPS UFSAR, PBAPS's systems and components were evaluated for license renewal. Systems and system component materials of construction, operating history, and programs used to manage aging effects were evaluated for plant license renewal and documented in the "Safety Evaluation Report Related to the License

Renewal of Peach Bottom Atomic Power Station, Units 2 and 3," NUREG-1769, dated March 2003 (Reference 10). The license renewal evaluation associated with the MC system is documented in NUREG-1769, Section 2.3.4.2. The management of the effects of aging on the MC system is documented in NUREG-1769, Section 3.4.2.

Technical Evaluation

NEDC-33004P-A, Revision 4, "Constant Pressure Power Uprate," Class III, July 2003 (also referred to as CLTR) was approved by the NRC as an acceptable method for evaluating the effects of CPPUs. Section 7.2 of the CLTR addresses the effect of CPPU on the Condenser and SJAEs. The results of this evaluation are described below.

PBAPS meets all CLTR dispositions. The topics addressed in this evaluation are:

Topic	CLTR Disposition	PBAPS Result
Condenser and SJAE	[[ ]]	Meets CLTR Disposition

As stated in the CLTR, the increase in steam flow increases the heat removal requirement for the condenser. The additional power level increases the non-condensable gases generated by the reactor.

The MC is designed to reject heat to the CWS and thereby maintain adequately low condenser pressure as recommended by the turbine vendor. Maintaining adequately low condenser pressure assures the efficient operation of the T-G and minimizes wear on the turbine last stage blades.

EPU operation increases the heat rejected to the condenser and, therefore, reduces the difference between the operating backpressure and the recommended maximum condenser backpressure. If condenser backpressures approach the main turbine backpressure limitation, then reactor thermal power reduction would be required to reduce the heat rejected to the condenser and maintain condenser pressure within the turbine requirements.

The MC is not being modified for EPU operation. The performance of the condenser was evaluated for EPU. This evaluation was based on a design duty over the actual range of circulating water inlet temperatures, and confirms that the condenser backpressure remains below the high alarm setpoint, the SCRAM setpoint, and the turbine trip setpoint during normal operation. Condenser hotwell temperature limitations may require load reductions due to circulating water inlet temperatures; however, this is anticipated to be an infrequent occurrence.

EPU operation decreases the margin for the MC storage capacity from approximately 3.1 minutes at CLTP to 2.7 minutes at EPU. Main condenser storage capacity has been evaluated to the required 2 minute retention time and found to be acceptable for EPU operation.

As the two minute holdup time for the decay of short-lived radioactive isotopes remains a conservative decay time, this remains acceptable for EPU operation.

The absolute value in lbm/hr of the steam bypassed to the MC during a load rejection event is not increased for EPU as discussed in Section 2.5.4.3. The condenser backpressure during a steam dump scenario remains below the high backpressure SCRAM setpoint.

Therefore, the Condenser and SJAEs for PBAPS meet all CLTR dispositions.

Conclusion

The effects of the proposed EPU on the MC system have been considered and the effects of changes in plant conditions on the design of the MC system have been adequately addressed. Exelon concludes that the MC system will continue to maintain its ability to withstand the blowdown effects of the steam from the TBS and thereby continue to meet the current licensing basis with respect to controlling releases of radioactive effluents. Therefore, Exelon finds the proposed EPU acceptable with respect to the MC system.

2.5.4.3 Turbine Bypass

Regulatory Evaluation

The TBS is designed to discharge a stated percentage of rated MS flow directly to the MC system, bypassing the turbine. This steam bypass enables the plant to take step-load reductions up to the TBS capacity without the reactor or turbine tripping. The system is also used during startup and shutdown to control reactor pressure. The review of the TBS focused on the effects that the proposed EPU have on load rejection capability, analysis of postulated system piping failures, and the consequences of inadvertent TBS operation. The regulatory acceptance criteria for the TBS are based on: (1) GDC-4, insofar as it requires that SSCs important to safety be designed to accommodate the effects of and to be compatible with the environmental conditions associated with normal operation, maintenance, testing, and postulated accidents (including pipe breaks or malfunctions of the TBS); and (2) GDC-34, insofar as it requires that a RHR system be provided to transfer fission product decay heat and other residual heat from the reactor core at a rate such that SAFDLs and the design conditions of the RCPB are not exceeded.

Peach Bottom Current Licensing Basis

The general design criteria listed in RS-001 are those currently specified in 10 CFR 50, Appendix A. The applicable PBAPS principal design criteria predate these criteria. The PBAPS principal design criteria are listed in UFSAR Section 1.5, "Principal Design Criteria." In 1967, the Atomic Energy Commission (AEC) published for public comment a revised set of proposed General Design Criteria (Federal Register 32 FR 10213 (Reference 9), July 11, 1967). Although not explicitly licensed to the AEC proposed General Design Criteria published in 1967, Philadelphia Electric Company (PECO), the predecessor to Exelon, performed a comparative evaluation of the design basis of PBAPS Units 2 and 3 against the AEC proposed General Design Criteria of 1967. The PBAPS UFSAR, Appendix H, "Conformance to AEC (NRC) Criteria," contains this comparative evaluation. UFSAR Appendix H provides a comparative

evaluation with each of the groups of criteria set out in the July 1967 AEC release. As to each group of criteria, there is a statement of Exelon's understanding of the intent of the criteria in that group and a discussion of the plant design conformance with the intent of the group of criteria. Following a restatement of each of the proposed criteria is a list of references to locations in the PBAPS UFSAR where there is subject matter relating to the intent of that particular criteria.

For the current GDC listed in the Regulatory Evaluation above, with the exception of current GDC-34, the PBAPS comparative evaluation of the comparable 1967 AEC proposed General Design Criteria (referred to here as "Draft GDC") is contained in PBAPS UFSAR Appendix H: Draft GDC-40 and Draft GDC-42. There is no Draft GDC directly associated with current GDC-34.

The TBS is described in PBAPS UFSAR Sections 11.5, "Turbine Bypass System" and 14.5, "Analyses of Abnormal Operational Transients."

In addition to the evaluations described in the PBAPS UFSAR, PBAPS's systems and components were evaluated for license renewal. Systems and system component materials of construction, operating history, and programs used to manage aging effects were evaluated for plant license renewal and documented in the "Safety Evaluation Report Related to the License Renewal of Peach Bottom Atomic Power Station, Units 2 and 3," NUREG-1769, dated March 2003 (Reference 10). The TBS is included in the discussion of the license renewal evaluation for the MS system. That discussion can be found in NUREG-1769, Section 2.3.4.1. Management of aging effects on the MS system is documented in NUREG-1769, Section 3.4.1.

Technical Evaluation

NEDC-33004P-A, Revision 4, "Constant Pressure Power Uprate," Class III, July 2003 (also referred to as CLTR) was approved by the NRC as an acceptable method for evaluating the effects of CPPUs. Section 7.3 of the CLTR addresses the effect of CPPU on the TBS. The results of this evaluation are described below.

The Turbine Steam Bypass System provides a means of accommodating excess steam generated during normal plant maneuvers and transients.

PBAPS meets all CLTR dispositions. The topics addressed in this evaluation are:

Topic	CLTR Disposition	PBAPS Result
Turbine Steam Bypass (safety analysis)	[[ ]]	Meets CLTR Disposition

The CLTR states that the increase in steam flow reduces the relative capacity of the Turbine Steam Bypass System.

[[

]]

The credited bypass capacity of 2.82 x 10^6 lbm/hr (unchanged from CLTP) is used as an input to the reload analysis process for the evaluation of AOO events that credit the Turbine Steam Bypass System. The AOO events are discussed further in Section 2.8.5.

Each of 9 bypass valves is designed to pass a steam flow of 0.402 Mlbm/hr, resulting in a system bypass capacity of 3.62 Mlbm/hr. The bypass capacity in terms of mass flow is not changed due to EPU. At the PBAPS EPU conditions, rated steam flow is 16.171 Mlbm/hr; the system bypass capability in terms of rated steam flow is 22.39%. The bypass capacity at PBAPS remains adequate for normal operational flexibility at EPU rated thermal power.

Therefore, the PBAPS steam bypass capacity used in the turbine steam bypass safety analysis meets all CLTR dispositions.

Conclusion

The effects of the proposed EPU on the TBS have been reviewed. Exelon concludes that the effects of changes in plant conditions on the design of the TBS have been adequately accounted for. Exelon concludes that TBS failures will not adversely affect essential SSCs. Based on this, Exelon concludes that the TBS will continue to meet the current licensing basis. Therefore, Exelon finds the proposed EPU acceptable with respect to the TBS.

2.5.4.4 Condensate and Feedwater

Regulatory Evaluation

The condensate and feedwater system (CFS) provides FW at a particular temperature, pressure, and flow rate to the reactor. The only part of the CFS classified as safety-related is the FW piping from the NSSS up to and including the outermost containment isolation valve. The review focused on how the proposed EPU affects previous analyses and considerations with respect to the capability of the CFS to supply adequate FW during plant operation and shutdown, and isolate components, subsystems, and piping in order to preserve the system's safety function. The regulatory acceptance criteria for the CFS are based on: (1) GDC-4, insofar as it requires that SSCs important to safety be designed to accommodate the effects of and to be compatible with the environmental conditions associated with normal operation including possible fluid flow instabilities (e.g., water hammer), maintenance, testing, and postulated accidents; (2) GDC-5, insofar as it requires that SSCs important to safety not be shared among nuclear power units unless it can be shown that sharing will not significantly impair their ability to perform their safety functions; and (3) GDC-44, insofar as it requires that a system with the capability to transfer heat loads from safety-related SSCs to a heat sink under both normal operating and accident conditions be provided, and that the system be provided with suitable isolation capabilities to assure the safety function can be accomplished with electric power available from only the onsite system or only the offsite system, assuming a single failure.

Peach Bottom Current Licensing Basis

The general design criteria listed in RS-001 are those currently specified in 10 CFR 50, Appendix A. The applicable PBAPS principal design criteria predate these criteria. The PBAPS principal design criteria are listed in UFSAR Section 1.5, "Principal Design Criteria." In 1967, the Atomic Energy Commission (AEC) published for public comment a revised set of proposed General Design Criteria (Federal Register 32 FR 10213 (Reference 9), July 11, 1967). Although not explicitly licensed to the AEC proposed General Design Criteria published in 1967, Philadelphia Electric Company (PECO), the predecessor to Exelon, performed a comparative evaluation of the design basis of PBAPS Units 2 and 3 against the AEC proposed General Design Criteria of 1967. The PBAPS UFSAR, Appendix H, "Conformance to AEC (NRC) Criteria," contains this comparative evaluation. UFSAR Appendix H provides a comparative evaluation with each of the groups of criteria set out in the July 1967 AEC release. As to each group of criteria, there is a statement of Exelon's understanding of the intent of the criteria in that group and a discussion of the plant design conformance with the intent of the group of criteria. Following a restatement of each of the proposed criteria is a list of references to locations in the PBAPS UFSAR where there is subject matter relating to the intent of that particular criteria.

For the current GDC listed in the Regulatory Evaluation above, with the exception of current GDC-44, the PBAPS comparative evaluation of the comparable 1967 AEC proposed General Design Criteria (referred to here as "Draft GDC") is contained in PBAPS UFSAR Appendix H: Draft GDC-4, Draft GDC-40, and Draft GDC-42. There is no Draft GDC directly associated with current GDC-44.

The CFS is described in PBAPS UFSAR Section 11.8, "Condensate and Reactor Feedwater Systems." The condensate demineralizer system is described in PBAPS UFSAR Section 11.7, "Condensate Filter-Demineralizer System."

In addition to the evaluations described in the PBAPS UFSAR, PBAPS's systems and components were evaluated for license renewal. Systems and system component materials of construction, operating history, and programs used to manage aging effects were evaluated for plant license renewal and documented in the "Safety Evaluation Report Related to the License Renewal of Peach Bottom Atomic Power Station, Units 2 and 3," NUREG-1769, dated March 2003 (Reference 10). The license renewal evaluation associated with the CFS is documented in NUREG-1769, Section 2.3.4.3. The management of the effects of aging on the condensate and FW system is documented in NUREG-1769, Section 3.4.3.

Technical Evaluation

NEDC-33004P-A, Revision 4, "Constant Pressure Power Uprate," Class III, July 2003 (also referred to as CLTR) was approved by the NRC as an acceptable method for evaluating the effects of CPPUs. Section 7.4 of the CLTR addresses the effect of CPPU on the Condensate and FW systems. The results of this evaluation are described below.

PBAPS meets all CLTR dispositions. The topics addressed in this evaluation are:

Topic	CLTR Disposition	PBAPS Result
FW and Condensate Systems	[[ ]]	Meets CLTR Disposition

The CLTR states that the increase in power level increases the FW requirements of the reactor.

The CFS are required for normal plant operation and are not safety-related. The CFS do not perform a system level safety-related function, and are designed to provide a reliable supply of FW at the temperature, pressure, quality, and flow rate as required by the reactor. However, their performance has a major effect on plant availability and capability to operate at EPU conditions.

[[ ]] These modifications are required to support normal operation and are non-safety related.

For EPU, the following changes are proposed to non-safety related components in the CFS to meet their performance requirements.

1. Reactor Feedpump Turbines – Repair degraded conditions
2. FW Heater 3A2 – Heater replacement
3. FW Heater 3B2 – Heater replacement
4. FW Heater 3C3 – Heater replacement
5. Condensate Filter / Demineralizer Vessels – Two additional vessels

Though the following components do not require changes for operation at EPU, their upgrade is expected to improve EPU operating margins.

1. Condensate Pumps – Upgrade to increase pumping capacity

Normal Operation

System operating flows at EPU increase to approximately 113.3% of rated flow at the CLTP. The CFS modifications assure acceptable performance with the new system operating conditions, provided that three condensate and three reactor FW pumps are in operation.

The FW heater design has been analyzed and verified to be acceptable for the higher FW heater flows, temperatures, and pressures for EPU, with the exception of FW heaters 3A2, 3B2, and 3C3. These FW heaters have existing material condition issues which may be exacerbated with increased flows at EPU conditions. These heaters are to be replaced prior to EPU operation.

Transient Operation

To account for FW demand transients, the FW system was evaluated and determined to be capable of supporting a flow transient of at least 105% of EPU steady-state operating flows with adequate

margins. For system operation with all system pumps available, the predicted operating parameters are acceptable and within the component capabilities. The post-condensate and FW pump trip system capacity was evaluated. This evaluation confirmed that following a condensate or FW pump trip, insufficient capacity is available to support the normal, steady-state EPU flows. Consequently, a condensate or reactor FW pump trip requires a reduction in the plant power level. PBAPS currently employs reactor recirculation runback logic to respond to condensate and FW pump trips. No modification to the reactor recirculation runback logic in response to a condensate and/or FW pump trip is required for EPU.

Condensate Demineralizers

The effect of EPU on the condensate demineralizer system was reviewed. Due to the increased flow associated with EPU, the condensate demineralizers will be modified to provide the additional capacity to support full flow operation while maintaining appropriate filter flux rates.

Therefore, the CFS meet all CLTR dispositions.

Conclusion

The effects of the proposed EPU on the CFS have been reviewed and adequately accounted for in the CFS design. Exelon concludes that the CFS will continue to maintain its ability to satisfy FW requirements for normal operation and shutdown, maintain isolation capability in order to preserve the system safety function, and not cause failure of safety-related SSCs. Exelon further concludes that the CFS will continue to meet the requirements of the current licensing basis. Therefore, Exelon finds the proposed EPU acceptable with respect to the CFS.

2.5.5 Waste Management Systems

2.5.5.1 Gaseous Waste Management Systems

Regulatory Evaluation

The GWMSs involve the gaseous radwaste system, which deals with the management of radioactive gases collected in the offgas system or the waste gas storage and decay tanks. In addition, it involves the management of the condenser air removal system; the gland seal exhaust and the mechanical vacuum pump operation exhaust; and the building ventilation system exhausts. The review focused on the effects that the proposed EPU may have on: (1) the design criteria of the GWMSs; (2) methods of treatment; (3) expected releases; (4) principal parameters used in calculating the releases of radioactive materials in gaseous effluents; and (5) design features for precluding the possibility of an explosion if the potential for explosive mixtures exists. The regulatory acceptance criteria for GWMSs are based on: (1) 10 CFR 20.1302, insofar as it provides for demonstrating that annual average concentrations of radioactive materials released at the boundary of the unrestricted area do not exceed specified values; (2) GDC-3, insofar as it requires that: (a) SSCs important to safety be designed and located to minimize the probability and effect of fires, (b) noncombustible and heat resistant materials be used, and (c) fire detection and fighting systems be provided and designed to minimize the adverse effects of fires on SSCs important to safety; (3) GDC-60, insofar as it requires that the plant design include

means to control the release of radioactive effluents; (4) GDC-61, insofar as it requires that systems that contain radioactivity be designed with appropriate confinement; and (5) 10 CFR 50, Appendix I, Sections II.B, II.C, and II.D, which set numerical guides for design objectives and limiting conditions for operation to meet the "as low as is reasonably achievable" (ALARA) criterion.

Peach Bottom Current Licensing Basis

The general design criteria listed in RS-001 are those currently specified in 10 CFR 50, Appendix A. The applicable PBAPS principal design criteria predate these criteria. The PBAPS principal design criteria are listed in UFSAR Section 1.5, "Principal Design Criteria." In 1967, the Atomic Energy Commission (AEC) published for public comment a revised set of proposed General Design Criteria (Federal Register 32 FR 10213 (Reference 9), July 11, 1967). Although not explicitly licensed to the AEC proposed General Design Criteria published in 1967, Philadelphia Electric Company (PECO), the predecessor to Exelon, performed a comparative evaluation of the design basis of PBAPS Units 2 and 3 against the AEC proposed General Design Criteria of 1967. The PBAPS UFSAR, Appendix H, "Conformance to AEC (NRC) Criteria," contains this comparative evaluation. UFSAR Appendix H provides a comparative evaluation with each of the groups of criteria set out in the July 1967 AEC release. As to each group of criteria, there is a statement of Exelon's understanding of the intent of the criteria in that group and a discussion of the plant design conformance with the intent of the group of criteria. Following a restatement of each of the proposed criteria is a list of references to locations in the PBAPS UFSAR where there is subject matter relating to the intent of that particular criteria.

For the current GDC listed in the Regulatory Evaluation above, the PBAPS comparative evaluation of the comparable 1967 AEC proposed General Design Criteria (referred to here as "Draft GDC") is contained in PBAPS UFSAR Appendix H: Draft GDC-3, Draft GDC-67, Draft GDC-68, Draft GDC-69, and Draft GDC-70. Current GDC-60 is applicable to PBAPS as described in the NRC SER for PBAPS Unit 2 and Unit 3 ODCM License Amendments 102 and 104 (Reference 35), respectively.

The GWMS is described in PBAPS UFSAR Section 9.4, "Gaseous Radwaste/Off-Gas System."

Technical Evaluation

NEDC-33004P-A, Revision 4, "Constant Pressure Power Uprate," Class III, July 2003 (also referred to as CLTR) was approved by the NRC as an acceptable method for evaluating the effects of CPPUs. Section 8.2 of the CLTR addresses the effect of CPPU on Gaseous Waste Management. The results of this evaluation are described below.

PBAPS meets all CLTR dispositions. The topics addressed in this evaluation are:

Topic	CLTR Disposition	PBAPS Result
Offsite release rate	[[	Meets CLTR Disposition
Recombiner performance	]]	Meets CLTR Disposition

2.5.5.1.1 *Offsite Release Rate*

The CLTR states that under EPU conditions, Offgas system functions other than the recombiner and related components are not significantly affected by power uprate.

The PBAPS site-specific CLTP design basis radiolytic gas production rate, 0.068 cfm/MWt, is [[

]] The actual radiolytic gas production rate is 0.052 cfm/MWt for Unit 2 and 0.046 cfm/MWt for Unit 3. These are constant rates. As these rates are proportional to reactor power in each unit, the radiolytic gas flowrate is expected to increase in proportion to the change in power, approximately 12% under EPU conditions. Because the actual radiolytic gas flowrate at EPU conditions is within the design basis (radiolytic gas) flowrate at OLTP, the design basis production value is retained at EPU conditions. As such, the OLTP design basis is maintained at EPU conditions and an evaluation was conducted. This evaluation verified that all structures, systems and components of the offgas system were acceptable for EPU operation.

The primary function of the GWMS is to process and control the release of gaseous radioactive effluents to the site environs so that the total radiation exposure of persons in offsite areas is within the guideline values of 10 CFR 50, Appendix I.

The condenser offgas system radiological release rate is administratively controlled to remain within existing site release rate limits and is a function of fuel cladding performance, MC air inleakage, charcoal adsorber inlet dew point, and charcoal adsorber temperature. PBAPS has TS requirements and administrative controls to limit fission gas releases to the environment. These TSs require plant procedures for improving condenser vacuum and for addressing "fuel cladding failure or high activity in Offgas". Such procedures are not affected by EPU. Further information regarding the production of noble gases (including effects of fuel cladding performance) at EPU conditions is found in Section 2.9.1.2.

The GWMS (Offgas System) design criteria ensure that it will meet the plant licensing basis for controlling gaseous waste such that the total radiation exposure of persons in offsite areas will be within the applicable guideline values of 10 CFR 20.1302 and 10 CFR 50, Appendix I. The plant gaseous waste licensing basis and the GWMS design criteria (for the Offgas portion) that

support the licensing basis are unchanged by EPU. The GWMS will continue to satisfy this licensing basis under EPU operating conditions.

The GWMS methods of treatment for radiological releases from the Offgas System consist of holdup and filtration to reduce the gaseous radioactivity that could be potentially released to offsite areas. The capacity and capability of the condenser offgas holdup and filtration system to adequately perform its design function are unchanged by EPU.

The offsite release rate at PBAPS meets all CLTR dispositions.

2.5.5.1.2 *Recombiner Performance*

The CLTR states that under EPU conditions, core radiolysis increases linearly with reactor thermal power, thus increasing the heat load on the offgas recombiner and related components.

The design features for precluding the possibility of an explosion include (a) dilution to control the concentration of hydrogen and (b) catalytic recombination to remove the combustible gas. The GWMS at PBAPS is consistent with GEH design specifications for radiolytic flowrate, and the PBAPS-specific value for radiolytic gas production rates are 0.052 cfm/MWt for Unit 2 and 0.046 cfm/MWt for Unit 3, which are both well below the PBAPS site specific design value of 0.068 cfm/MWt (130°F and 1 atm.). Therefore, the recombiner and condenser, as well as downstream system components, are designed to handle the increase in thermal power of the EPU. The GWMS component design requirements are determined by the quantity of radiolytic hydrogen and oxygen, which is expected to increase in proportion to the EPU power increase. The additional radiolytic hydrogen will also increase the catalytic recombiner temperature and offgas condenser heat load. These increases have been evaluated and it has been confirmed that sufficient margin remains in the PBAPS Offgas System component design to ensure that the system will continue to satisfy the plant licensing basis.

The recombiner performance at PBAPS meets all CLTR dispositions.

Conclusion

The GWMSs have been reviewed with respect to the effects of the EPU. Exelon concludes that it has adequately accounted for the effects of the increase in fission product and amount of gaseous waste on the abilities of the systems to control releases of radioactive materials and preclude the possibility of an explosion, if the potential for explosive mixtures exists. Exelon finds that the GWMSs will continue to meet their design functions following implementation of the EPU. Exelon further concludes that the GWMSs will continue to meet the requirements of 10 CFR 20.1302, 10 CFR 50, Appendix I, Sections II.B, II.C, and II.D and current licensing basis. Therefore, Exelon finds the proposed EPU acceptable with respect to the GWMSs.

2.5.5.2 Liquid Waste Management Systems

Regulatory Evaluation

The review of liquid waste management systems (LWMS) focused on the effects that the proposed EPU may have on previous analyses and considerations related to the LWMSs' design,

design objectives, design criteria, methods of treatment, expected releases, and principal parameters used in calculating the releases of radioactive materials in liquid effluents. The regulatory acceptance criteria for the LWMSs are based on: (1) 10 CFR 20.1302, insofar as it provides for demonstrating that annual average concentrations of radioactive materials released at the boundary of the unrestricted area do not exceed specified values; (2) GDC-60, insofar as it requires that the plant design include means to control the release of radioactive effluents; (3) GDC-61, insofar as it requires that systems that contain radioactivity be designed with appropriate confinement; and (4) 10 CFR 50, Appendix I, Sections II.A and II.D, which set numerical guides for dose design objectives and limiting conditions for operation to meet the ALARA criterion.

Peach Bottom Current Licensing Basis

The general design criteria listed in RS-001 are those currently specified in 10 CFR 50, Appendix A. The applicable PBAPS principal design criteria predate these criteria. The PBAPS principal design criteria are listed in UFSAR Section 1.5, "Principal Design Criteria." In 1967, the Atomic Energy Commission (AEC) published for public comment a revised set of proposed General Design Criteria (Federal Register 32 FR 10213 (Reference 9), July 11, 1967). Although not explicitly licensed to the AEC proposed General Design Criteria published in 1967, Philadelphia Electric Company (PECO), the predecessor to Exelon, performed a comparative evaluation of the design basis of PBAPS Units 2 and 3 against the AEC proposed General Design Criteria of 1967. The PBAPS UFSAR, Appendix H, "Conformance to AEC (NRC) Criteria," contains this comparative evaluation. UFSAR Appendix H provides a comparative evaluation with each of the groups of criteria set out in the July 1967 AEC release. As to each group of criteria, there is a statement of Exelon's understanding of the intent of the criteria in that group and a discussion of the plant design conformance with the intent of the group of criteria. Following a restatement of each of the proposed criteria is a list of references to locations in the PBAPS UFSAR where there is subject matter relating to the intent of that particular criteria.

For the current GDC listed in the Regulatory Evaluation above, the PBAPS comparative evaluation of the comparable 1967 AEC proposed General Design Criteria (referred to here as "Draft GDC") is contained in PBAPS UFSAR Appendix H: Draft GDC-67, Draft GDC-68, Draft GDC-69, and Draft GDC-70. Current GDC-60 is applicable to PBAPS as described in the NRC SER for PBAPS Unit 2 and Unit 3 ODCM License Amendments 102 and 104 (Reference 35), respectively.

The LWMS is described in PBAPS UFSAR Section 9.2, "Liquid Radwaste System."

In addition to the evaluations described in the PBAPS UFSAR, PBAPS's systems and components were evaluated for license renewal. Systems and system component materials of construction, operating history, and programs used to manage aging effects were evaluated for plant license renewal and documented in the "Safety Evaluation Report Related to the License Renewal of Peach Bottom Atomic Power Station, Units 2 and 3," NUREG-1769, dated March 2003 (Reference 10). The license renewal evaluation associated with the LWMS is documented in NUREG-1769, Section 2.4.7.2.

Technical Evaluation

NEDC-33004P-A, Revision 4, "Constant Pressure Power Uprate," Class III, July 2003 (also referred to as CLTR) was approved by the NRC as an acceptable method for evaluating the effects of CPPUs. Section 8.1 of the CLTR addresses the effect of CPPU on Liquid Waste Management. The results of this evaluation are described below.

As stated in Section 8.1 of the CLTR, the Liquid Radwaste System collects, monitors, processes, stores and returns processed radioactive waste to the plant for reuse or for discharge.

PBAPS meets all CLTR dispositions. The topics addressed in this evaluation are:

Topic	CLTR Disposition	PBAPS Result
Waste Volumes	[[	Meets CLTR Disposition
Coolant Fission and Corrosion Product Levels	]]	Meets CLTR Disposition

2.5.5.2.1 Waste Volumes

The CLTR states that increased power levels and steam flow result in the generation of slightly higher levels of liquid radwaste (proportional to the increase in RTP). The largest sources of liquid waste are from the backwash of condensate and RWCU filter-demineralizers. Other increases in the LWMS load, such as increased leakage due to higher system pressures, are minimal. The effect of EPU on the LWMS is primarily a result of the increased load on condensate filter/demineralizers. Similarly, the RWCU filter-demineralizer requires more frequent backwashes due to slightly higher levels of activation and fission products.

[[

]]

Because the RWCU flow rate will remain the same as CLTP, but an increase in contaminate concentration is projected, the RWCU system is projected to experience a slight increase in filter demineralizer backwash frequency. The existing confined liquid storage capacity can accommodate this small increase with no changes.

Because the liquid volume does not increase appreciably for EPU, the current design and operation of the LWMS will accommodate the effects of EPU with no changes, and the existing equipment and procedures that control releases to the environment will continue to ensure that

releases remain within the applicable guideline values of 10 CFR 20.1302 and 10 CFR 50, Appendix I, and 40 CFR 190.

Therefore, the waste volumes meet all CLTR dispositions.

2.5.5.2.2 Coolant Fission and Corrosion Product Levels

The CLTR states that increased power levels and steam flow result in the generation of slightly higher levels of coolant concentrations of fission and corrosion products.

The coolant activation and corrosion products are slightly increased as a result of EPU as discussed Section 8.4 of the CLTR.

For the purpose of evaluating the radiological effects of the EPU, reactor coolant fission and corrosion product radioactivity levels are determined using ANSI/ANS-18.1-1999. It was assumed that the operational radiological sources increased by the EPU fraction, which is 20% relative to OLTP. There is adequate margin between the actual operation sources and design basis sources to accommodate the 20% increase. Therefore, the current design basis sources remain bounding.

The current design and operation of the LWMS will accommodate the effects of the EPU with no changes. The existing equipment and procedures that control releases to the environment will continue to ensure that releases remain within the applicable guideline values of 10 CFR 20.1302 and 10 CFR 50, Appendix I, and 40 CFR 190.

Therefore, the coolant fission and corrosion product levels meet all CLTR dispositions.

Conclusion

The effects of the EPU on the LWMSs have been evaluated. Exelon concludes that it has adequately accounted for the effects of the increase in fission product and amount of liquid waste on the ability of the LWMSs to control releases of radioactive materials. Exelon finds that the LWMSs will continue to meet their design functions following implementation of the proposed EPU. Exelon further concludes that the LWMSs will continue to meet the requirements of 10 CFR 20.1302, 10 CFR 50, Appendix I, Sections II.A and II.D, and the current licensing basis. Therefore, Exelon finds the proposed EPU acceptable with respect to the LWMSs.

2.5.5.3 Solid Waste Management Systems

Regulatory Evaluation

The review of the solid waste management systems (SWMS) focused on the effects that the proposed EPU may have on previous analyses and considerations related to the design objectives in terms of expected volumes of waste to be processed and handled, the wet and dry types of waste to be processed, the activity and expected radionuclide distribution contained in the waste, equipment design capacities, and the principal parameters employed in the design of the SWMS. The regulatory acceptance criteria for the SWMS are based on: (1) 10 CFR 20.1302, insofar as it provides for demonstrating that annual average concentrations of radioactive materials released at the boundary of the unrestricted area do not exceed specified values; (2) GDC-60, insofar as it

requires that the plant design include means to control the release of radioactive effluents; (3) GDC-63, insofar as it requires that systems be provided in waste handling areas to detect conditions that may result in excessive radiation levels; (4) GDC-64, insofar as it requires that means be provided for monitoring effluent discharge paths and the plant environs for radioactivity that may be released from normal operations, including AOOs, and postulated accidents; and (5) 10 CFR 71, which states requirements for radioactive material packaging.

Peach Bottom Current Licensing Basis

Current GDC-60, current GDC-63, and current GDC-64 are applicable to PBAPS as described in the NRC SER for PBAPS Unit 2 and Unit 3 ODCM License Amendments 102 and 104 (Reference 35), respectively. The SWMS is described in PBAPS UFSAR Section 9.3, "Solid Radwaste System."

Technical Evaluation

NEDC-33004P-A, Revision 4, "Constant Pressure Power Uprate," Class III, July 2003 (also referred to as CLTR) was approved by the NRC as an acceptable method for evaluating the effects of CPPUs. Section 8.1 of the CLTR addresses the effect of CPPU on Solid Waste Management. The results of this evaluation are described below.

The Solid Radwaste System collects, monitors, processes, and stores processed radioactive waste prior to offsite disposal. PBAPS meets all CLTR dispositions. The topics considered in this section are:

Topic	CLTR Disposition	PBAPS Result
Coolant Fission and Corrosion Product Levels	[[	Meets CLTR Disposition
Waste Volumes	]]	Meets CLTR Disposition

2.5.5.3.1 Coolant Fission and Corrosion Product Levels

The CLTR states that increased power levels and steam flow result in the generation of slightly higher levels of coolant concentrations of fission and corrosion products.

For the purpose of evaluating the radiological effects of the EPU, it was assumed that the operational radiological sources increased by the EPU fraction, which is 20% relative to OLTP. There is adequate margin between the actual operation sources and design basis sources to accommodate the 20% increase. Therefore, the current design basis sources remain bounding.

The radiological sources associated with EPU have been reviewed and these changes are small such that the current design and operation of the SWMS will accommodate the effects of the EPU with no changes affecting the existing equipment and procedures that control waste shipments and

releases to the environment will continue to ensure that releases remain within the applicable regulatory guidance. Specifically, the increased level of condensate backwash may require: 1) expanding polyelectrolyte treatment and 2) retrofitting a third condensate phase separator to accept polyelectrolyte treatment.

Radiation effluent limits and monitoring requirements are independent of reactor thermal power and therefore are not affected by EPU. Therefore, the coolant fission and corrosion product levels meet all CLTR dispositions.

2.5.5.3.2 Waste Volumes

The CLTR states that increased power levels and steam flow result in the generation of slightly higher levels of liquid and solid radwaste.

The waste streams for the SWMS are (1) dry active waste, and (2) spent ion exchange resin and filter sludge. EPU does not affect dry active waste so the volume and mix of dry active waste is unchanged. The effect of EPU on the SWMS is primarily a result of the increased load on condensate filter/demineralizers. The increased demineralizer loads are expected to increase the volumes of spent ion exchange resin and filter sludge. The result is that the increase in solid radwaste volume is conservatively considered to increase proportionally to the increase in RTP. There is adequate margin between the actual solid radwaste volume and design basis volume to accommodate this increase.

EPU does not generate a new type of waste or create a new waste stream. Therefore, the types of radwaste that require shipment are unchanged.

Because the solid volume does not increase appreciably, the current design and operation of the SWMS will accommodate the effects of EPU with no changes, and the existing equipment and procedures that control waste shipments and releases to the environment will continue to ensure that releases remain within the applicable regulatory guidance. Therefore, the waste volumes meet all CLTR dispositions.

Conclusion

The effects of the EPU on the SWMSs have been evaluated. Exelon concludes that it has adequately accounted for the effects of the increase in fission product and amount of solid waste on the ability of the SWMS to process the waste. Exelon finds that the SWMS will continue to meet its design functions following implementation of the proposed EPU. Exelon further concludes that it has demonstrated that the SWMS will continue to meet the requirements of 10 CFR 20.1302, 10 CFR 71, and the current licensing basis. Therefore, Exelon finds the proposed EPU acceptable with respect to the SWMS.