RT-100 Type B Cask

Safety Analysis Report

Docket Number 71-9365

TAC Number L24686

Revision 0

Volume I

Non-Proprietary Information

October 9, 2012

This Part 71 Application for Approval of RT-100 Type B Cask Package for Radioactive Material represents Robatel Technologies, LLC approach to its business as applied to the specifications of this submittal. This Application requests that the Nuclear Regulatory Commission respects the proprietary information and withholds it from public disclosure subject to the provisions of 10 CFR 2.390. All detailed drawings are considered proprietary information. This is Volume I and contains only Non-Proprietary Information. Volume II contains the Affidavit and the Proprietary Information.

TABLE OF CONTENTS

1 GENERAL INFORMATION 1-1

1.1 PROPOSED USE/MODEL NUMBER/CSI 1-1
1.2 PACKAGE DESCRIPTION 1-3
1.2.1 General Description 1-3
1.2.2 Contents 1-7
1.2.2.1 Identification and Maximum Quantity 1-7
1.2.2.2 Identification and Maximum Quantity of Fissile Material 1-7
1.2.2.3 Physical and Chemical Form – Density, Moisture Content and Moderators 1-7
1.2.2.4 Location and Configuration 1-7
1.2.2.5 Use of Non-Fissile Materials as Neutron Absorbers/Moderators 1-8
1.2.2.6 Chemical/Galvanic/Gas Generation 1-8
1.2.2.7 Maximum Weight of Contents and Payload 1-8
1.2.2.9 Loading Restrictions 1-9
1.2.3 Special Requirements for Plutonium 1-9
1.2.4 Operational Features 1-9
1.3 ENGINEERING DRAWINGS AND ADDITIONAL INFORMATION 1-9
1.3.1 Engineering Drawings 1-9
1.3.2 Conformance to Approved Design 1-10
1.3.3 Referenced Pages 1-10
1.3.4 Special Fabrication Procedures 1-10
1.3.5 Package Category 1-10
1.3.6 Supplemental Information 1-10
1.4 REFERENCES 1-11
1.5 APPENDIX 1 1-11

2 STRUCTURAL EVALUATION 2-1

2.1 DESCRIPTION OF STRUCTURAL DESIGN 2-1
2.1.1 Discussion 2-3
2.1.1.1 Containment Boundary 2-4
2.1.2 Design Criteria 2-4
2.1.2.1 Cask Body Criteria (except Bolts and Seals) 2-4

2.1.2.2 BOLTS 2-5

2.1.2.3 Lead 2-6
2.1.2.4 Foam 2-6
2.1.3 Weights and Centers of Gravity 2-6
2.1.4 Identification of Codes and Standards for Package Design 2-7
2.2 MATERIALS 2-8
2.2.1 Material Properties and Specifications 2-8
2.2.2 Chemical, Galvanic, or Other Reactions 2-11
2.2.2.1 Component Material Categories 2-12
2.2.2.2 General Effects of Identified Reactions 2-14
2.2.2.3 Adequacy of the Cask Operating Procedures 2-14
2.2.2.4 Effects of Reaction Products 2-14
2.2.3 Effects of Radiation on Materials 2-14
2.3 FABRICATION AND EXAMINATION 2-14
2.3.1 Fabrication 2-14
2.3.2 Examination 2-15
2.4 GENERAL REQUIREMENTS FOR ALL PACKAGES 2-15
2.4.1 Minimum Package Size 2-15
2.4.2 Tamper-Indicating Feature 2-15
2.4.3 Positive Closure 2-15
2.5 LIFTING AND TIE-DOWN STANDARDS FOR ALL PACKAGES 2-16
2.5.1 Lifting Devices 2-16
2.5.1.1 Lifting Design Criteria 2-16
2.5.1.2 Lifting Device Descriptions 2-16
2.5.1.3 Lifting Device Evaluations 2-17
2.5.1.3.1 Cask Body Lifting Evaluation 2-17
2.5.1.3.2 Primary Lid Lifting Evaluation 2-20
2.5.1.3.3 Secondary Lid Lifting Evaluation 2-21
2.5.1.3.4 Upper Impact Limiter Lifting Evaluation 2-23
2.5.1.3.5 Lower Impact Limiter Lifting Evaluation 2-24
2.5.2 Tie-down Devices 2-26
2.5.2.1 Tie-down Load Calculation 2-26
2.5.2.2 Tie-down Force Calculation 2-27
2.5.2.3 Tie-down Arm Evaluation 2-30
2.5.2.4 Tie-down Arm & Plate Weld Evaluation 2-30
2.5.2.5 Tie-Down Evaluation Summary 2-34
2.6 NORMAL CONDITIONS OF TRANSPORT 2-34
2.6.1 Heat 2-35
2.6.1.1 Summary of Pressures and Temperatures 2-35
2.6.1.2 Differential Thermal Expansion 2-35

2.6.1.3 Stress Calculations 2-36
2.6.1.4 Comparison with Allowable Stresses 2-36
2.6.2 Cold 2-36
2.6.3 Reduced External Pressure 2-36
2.6.4 Increased External Pressure 2-37
2.6.5 Vibration 2-37
2.6.6 Water Spray 2-40
2.6.7 Free Drop 2-40
2.6.7.1 Methodology 2-41
2.6.7.2 Finite Element Analysis 2-41
2.6.7.3 Side Drop 2-52
2.6.7.4 End Drop 2-60
2.6.8 Corner Drop 2-68
2.6.9 Compression 2-68
2.6.10 Penetration 2-68
2.7 HYPOTHETICAL ACCIDENT CONDITIONS 2-68
2.7.1 Free Drop 2-68
2.7.1.1 End Drop 2-70
2.7.1.2 Side Drop 2-78
2.7.1.3 Corner Drop 2-86
2.7.1.4 Oblique Drops 2-86
2.7.1.5 Summary of Results 2-86
2.7.2 Crush 2-86
2.7.3 Puncture 2-86
2.7.3.1 Lid Puncture 2-86
2.7.3.2 Cask Side Puncture 2-88
2.7.3.3 Lead Deformation during Side Puncture 2-89
2.7.4 Thermal 2-95
2.8 ACCIDENT CONDITIONS FOR AIR TRANSPORT OF PLUTONIUM 2-97
2.9 ACCIDENT CONDITIONS FOR FISSILE MATERIAL PACKAGES FOR AIR TRANSPORT 2-97
2.10 SPECIAL FORM 2-98
2.11 FUEL RODS 2-98
2.12 REFERENCES 2-98
2.13 APPENDIX 2 - IMPACT LIMITER ANALYSIS 2-100
2.14 APPENDIX 2 - CLOSURE BOLT EVALUATION 2-100
2.15 APPENDIX 2 – FABRICATION STRESSES 2-100

3 THERMAL EVALUATION 3-1

3.1 DESCRIPTION OF THERMAL DESIGN 3-4

3.1.1 Design Features ... *3-4*
3.1.1.1 RT-100 Description ... *3-4*
3.1.1.2 RT-100 Dimensions ... *3-5*
3.1.2 Content's Decay Heat ... *3-5*
3.1.3 Summary Tables of Temperatures ... *3-6*
3.1.4 Summary Tables of Maximum Pressures ... *3-7*
3.2 MATERIAL PROPERTIES AND COMPONENT SPECIFICATIONS ... 3-7
3.2.1 Material Properties ... *3-7*
3.2.2 Component Specifications ... *3-10*
3.3 THERMAL EVALUATION UNDER NORMAL CONDITIONS OF TRANSPORT ... 3-11
3.3.1 Heat and Cold ... *3-12*
3.3.1.1 Load Cases ... *3-13*
3.3.1.2 Analytical Model ... *3-14*
3.3.1.3 Analysis Results ... *3-14*
3.3.2 Maximum Normal Operating Pressure ... *3-14*
3.3.2.1 Calculation Method ... *3-15*
3.3.2.2 Pressure Due to the Initially Sealed Air in the Cavity ... *3-15*
3.3.2.3 Pressure Due to the Water Vapor in the Cask ... *3-15*
3.3.2.4 Pressure Due to Generation of Gas ... *3-15*
3.3.2.5 Total Pressure ... *3-16*
3.4 THERMAL EVALUATION UNDER HYPOTHETICAL ACCIDENT CONDITIONS ... 3-16
3.4.1 Initial Conditions ... *3-17*
3.4.2 Fire Test Conditions ... *3-17*
3.4.2.1 Analytical Model ... *3-17*
3.4.2.2 Analysis Results ... *3-18*
3.4.3 Maximum Temperatures and Pressure ... *3-18*
3.4.3.1 Maximum Temperatures ... *3-18*
3.4.3.2 Maximum Accident Condition Pressure ... *3-19*
3.4.3.2.1 Calculation Method ... *3-19*
3.4.3.2.2 Pressure Due to the Initially Sealed Air in the Cavity ... *3-19*
3.4.3.2.3 Pressure Due to the Water Vapor in the Cask ... *3-20*
3.4.3.2.4 Pressure Due to Generation of Gas ... *3-20*
3.4.3.2.5 Total Pressure ... *3-21*
3.4.4 Maximum Thermal Stress ... *3-21*
3.4.5 Accident Conditions for Fissile Material Packages for Air Transport ... *3-21*
3.5 REFERENCES ... 3-22
3.6 APPENDIX 3 ... 3-23

4 CONTAINMENT ... 4-1

4.1 DESCRIPTION OF CONTAINMENT SYSTEM 4-1
4.1.1 Containment Vessel 4-1
4.1.2 Containment Penetration 4-2
4.1.3 Welds and Seals 4-3
4.1.4 Closure 4-4
4.2 CONTAINMENT UNDER NORMAL CONDITIONS OF TRANSPORT 4-4
4.2.1 Maximum Permitted Leakage Rate 4-5
4.2.2 Containment Under Normal Conditions of Transport 4-6
4.3 CONTAINMENT UNDER HYPOTHETICAL ACCIDENT CONDITIONS OF TRANSPORT 4-9
4.4 LEAKAGE RATE TEST FOR TYPE B PACKAGES 4-11
..... 4-13
4.5 REFERENCES 4-15

5 SHIELDING EVALUATION 5-1

5.1 DESCRIPTION OF SHIELDING DESIGN 5-2
5.1.1 Design Features 5-3
5.1.2 Summary Table of Maximum Radiation Levels 5-3
5.2 SOURCE SPECIFICATION 5-4
5.2.1 Gamma Source 5-5
5.2.2 Neutron Source 5-5
5.3 SHIELDING MODEL 5-6
5.3.1 Configuration of Source and Shielding 5-7
5.3.2 Material Properties 5-7
5.4 SHIELDING EVALUATION 5-10
5.4.1 Methods 5-10
5.4.2 Input and Output Data 5-11
5.4.3 Flux-to-Dose-Rate Conversion 5-12
5.4.4 External Radiation Levels 5-14
5.5 REFERENCES 5-16
5.6 APPENDIX 5 5-16
5.6.1 List of Gamma Nuclides with Great than 1 Day Half Life 5-16
5.6.2 Gamma Nuclide Responses 5-19
5.6.3 Nuclide Maximum Ci/g Loading Limits 5-36

6 CRITCALITY EVALUATION 6-1

7 PACKAGE OPERATIONS 7-1

7.1 PACKAGE LOADING 7-3
7.1.1 Preparation for Loading 7-3
7.1.1.1 Package Removal from Trailer 7-4

7.1.1.2 Lower Impact Limiter Removal 7-4
7.1.1.3 Upper Impact Limiter Removal 7-4
7.1.1.4 Removal of Quick Disconnect Valve Cover Plate 7-4
7.1.1.5 Removal of the Primary Lid 7-5
7.1.1.6 Secondary Lid Removal 7-6
7.1.2 Loading of the RT-100 7-6
7.1.2.1 Content Loading 7-6
7.1.2.2 Primary Lid Replacement 7-7
7.1.2.3 Secondary Lid Replacement 7-7
7.1.2.4 Quick Disconnect Valve Cover Plate replacement 7-8
7.1.3 Preparation for Transport 7-8
7.1.3.1 Replacement of Lower Impact Limiter 7-8
7.1.4 Verification for Transport 7-11
7.2 PACKAGE UNLOADING 7-12
7.2.1 Inspection at Package Receipt 7-12
7.2.2 Removal of Contents 7-12
7.3 PREPARATION OF EMPTY PACKAGE FOR TRANSPORT 7-13
7.4 PACKAGE REMOVAL FROM TRAILER 7-14
7.4.1 RT-100 Handling Safety Conditions 7-16
7.5 Tightening of Components 7-16
7.6 CONTAINMENT SEALS LEAKAGE TESTING 7-18
7.7 REFERENCES 7-19
7.8 APPENDIX 7 7-19
7.8.1 RT-100 Loading Table 7-19

8 ACCEPTANCE TESTS AND MAINTENANCE PROGRAM 8-1

8.1 ACCEPTANCE TESTS 8-2
8.1.1 Visual Inspections and Measurements 8-3
8.1.2 Weld Examinations 8-3
8.1.3 Structural and Pressure Tests 8-3
8.1.4 Leakage Tests 8-4
8.1.4.3 Leakage Rate Criteria 8-5
8.1.5 Component and Material Tests 8-5
8.1.6 Shielding Tests 8-5
8.1.7 Thermal Tests 8-5
8.1.8 Miscellaneous Tests 8-5
8.2 MAINTENANCE PROGRAM 8-6
8.2.1 Maintenance During Normal Use 8-6
8.2.2 Periodic Maintenance Every 12 Months 8-7

8.2.3 Leakage tests *8-8*
8.2.4 Structural Tests *8-9*
8.2.5 Shielding Tests *8-9*
8.2.6 Thermal Tests *8-9*
8.2.7 Miscellaneous Test *8-9*
8.3 REFERENCES 8-10

9 COMPLIANCE MATRIX 9-1

TABLES

Table 2.1.3-1 Assembly Weights and Center of Gravity Locations 2-7
Table 2.2.1-1 Cask Temperature-Dependent Material Properties 2-9
Table 2.2.1-2 Cask Temperature-Independent Material Properties 2-10
Table 2.2.1-3 Allowable Stresses for Cask Body Materials 2-11
Table 2.6.7-1 Load Combinations for RT100 Cask Body Analyses 2-41
Table 2.6.7-2 Structural Design Criteria for RT100 2-41
Table 2.6.7.3-1. NCT Side Drop Stress Summary 2-53
Table 2.6.7.4-1 NCT End Drop Stress Summary 2-61
Table 2.7.1-1 HAC End Drop Stress Summary 2-71
Table 2.7.2-1 HAC Side Drop Stress Summary 2-79
Table 2.7.3-1 HAC Pin Puncture Stress Summary 2-87
Table 2.7.4-1 HAC Pressure Stress Summary 2-97
Table 3.1.3-1 RT-100 Maximum Normal Condition Temperature Summary 3-6
Table 3.1.3-2 RT-100 Maximum Hypothetical Accident Condition Temperature Summary .. 3-6
Table 3.1.4-1 RT-100 Summary of Maximum Normal and Hypothetical Accident Condition Pressures 3-7
Table 3.2-1 Temperature-Independent Material Properties 3-8
Table 3.2-2 Temperature-Dependent Material Properties—Stainless Steel 304 3-9
Table 3.2-3 Temperature-dependent Material Properties—Lead 3-10
Table 3.2-4 - Temperature-dependent Material Properties—Ceramic Paper 3-10
Table 3.2-5 – Component Specifications – Minimum and Maximum Temperatures 3-11
Table 4.1.4-1 Bolt and Cap Screw Torque Requirements 4-4
Table 4.3-1 Standard Leakage Rates for Air 4-10
Table 4.4-1 Leakage Tests of the RT-100 Package 4-11
Table 5.1.2-1 Summary Table of External Radiation Levels (Exclusive Use) 5-4
Table 5.1.2-2 Radiation Levels 1 Meter From Package Surface 5-4
Table 5.2.1-1 One Curie Co-60 Gamma Source Term 5-5
Table 5.2.2-1 One Curie Cm-244 and Pu-242 Neutron Source Term 5-6

Table 5.3-1 Model Shielding Dimensions 5-7
Table 5.3.2-1 RT-100 Material Composition Summary 5-9
Table 5.4.3-1 ANSI/ANS 6.1.1-1977 – Gamma Flux-to-Dose Conversion Factors 5-12
Table 5.4.3-1 (continued) 5-13
Table 5.4.3-2 ANSI/ANS 6.1.1-1977 – Neutron Flux-to-Dose Conversion Factors 5-14
Table 5.4.4-3 NCT Dose Rates for the Maximum Co-60 Loading in the RT-100 5-15
Table 5.4.4-4 HAC Dose Rates for the Maximum Co-60 Loading in the RT-100 5-15
Table 5.6.1-1 List of Gamma Nuclides with Greater Than 1 Day Half Life 5-17
Table 5.6.2-1 NCT Gamma Dose Rate Responses (mrem/hr/Ci) 5-19
Table 5.6.2-1 (Continued) 5-20
Table 5.6.2-1 (Continued) 5-21
Table 5.6.2-1 (Continued) 5-22
Table 5.6.2-1 (Continued) 5-23
Table 5.6.2-1 (Continued) 5-24
Table 5.6.2-1 (Continued) 5-25
Table 5.6.2-1 (Continued) 5-26
Table 5.6.2-2 HAC Gamma Dose Rate Responses (mrem/hr/Ci) 5-27
Table 5.6.2-2 (Continued) 5-28
Table 5.6.2-2 (Continued) 5-29
Table 5.6.2-2 (Continued) 5-30
Table 5.6.2-2 (Continued) 5-31
Table 5.6.2-2 (Continued) 5-32
Table 5.6.2-2 (Continued) 5-33
Table 5.6.2-2 (Continued) 5-34
Table 5.6.2-3 NCT Nuclide Neutron Dose Rate Responses (mrem/hr/Ci) 5-34
Table 5.6.2-4 HAC Nuclide Neutron Dose Rate Responses (mrem/hr/Ci) 5-35
Table 5.6.3-1 Nuclide Maximum Ci/g Loading Limits based on Gamma Response 5-36
Table 5.6.3-1 (Continued) 5-37
Table 5.6.3-1 (Continued) 5-38
Table 5.6.3-1 (Continued) 5-39
Table 5.6.3-1 (Continued) 5-40
Table 5.6.3-1 (Continued) 5-41
Table 5.6.3-1 (Continued) 5-42
Table 5.6.3-1 (Continued) 5-43
Table 7.5.1-1 Lid Bolt Tightening Torques 7-17
Table 7.5.2-2 Tightening Torques - Other Parts 7-17
Table 7.7.1-1 Resin Nuclides 7-20
Table 7.7.1-2 Maximum Co-60 Contents 7-28

FIGURES

Figure 1-1 Information Flow for General Information 1-2
Figure 2-1 Information Flow for the Structural Review 2-2
Figure 2.5.1.3.1-1 RT-100 Lifting Pocket Dimensions 2-18
Figure 2.5.2.2-1 RT-100 Tie-Down Arm Geometry 2-28
Figure 2.5.2.2-2 RT-100 Tie-Down Free Body Diagrams 2-29
Figure 2.5.2.4-1 RT-100 Tie-Down Arm and Plate Dimensions 2-32
Figure 2.6.7.2.1-1 RT-100 Solid Model 2-43
Figure 2.6.7.2.1-2 RT-100 Finite Element Model 2-44
Figure 2.6.7.2.1-3 Gap Elements Used to Represent the Impact Limiters for Side and End Drop Configurations 2-45
Figure 2.6.7.2.1-4 Pressure Distribution Used to Simulate the Contents 2-46
Figure 2.7.1-1 RT-100 HAC End Drop Stress Intensity Results 2-72
Figure 2.7.1-2 RT-100 Inner Shell HAC End Drop Stress Intensity Results 2-73
Figure 2.7.1-4 RT-100 Flange HAC End Drop Stress Intensity Results 2-75
Figure 2.7.1-5 RT-100 Outer Lid HAC End Drop Stress Intensity Results 2-75
Figure 2.7.1-6 RT-100 Inner Lid HAC End Drop Stress Intensity Results 2-76
Figure 2.7.1-7 RT-100 Lead Slump 2-77
Figure 2.7.1-8 RT-100 HAC Side Drop Stress Intensity Results 2-80
Figure 2.7.1-9 RT-100 Inner Shell HAC Side Drop Stress Intensity Results 2-81
Figure 2.7.1-10 RT-100 Outer Shell HAC Side Drop Stress Intensity Results 2-82
Figure 2.7.1-11 RT-100 Flange HAC Side Drop Stress Intensity Results 2-83
Figure 2.7.1-12 RT-100 Outer Lid HAC Side Drop Stress Intensity Results 2-84
Figure 2.7.1-13 RT-100 Inner Lid HAC Side Drop Stress Intensity Results 2-85
Figure 2.7.3-1 RT-100 ANSYS Puncture Model 2-92
Figure 2.7.3-2 RT-100 Pin Puncture Stress Intensity Results 2-93
Figure 2.7.3-3 RT-100 Side Puncture Details 2-94
Figure 3-1 Information Flow for the Thermal Review 3-3
Figure 4-1 Information Flow for the Containment Review 4-2
Figure 4.1.2-1 Illustration of Overall Containment Boundary 4-3
Figure 4.1.2-2 Illustration of Lid Containment Boundary 4-3
Figure 5-1 Information Flow for the Shielding Review 5-2
Figure 7-1 Information Flow for the Operating Procedures Review 7-2
Figure 7.4 -1 Spreader Beam Arm Positioned on Cask 7-15
Figure 7.4 -2 Spreader Beam Connections 7-15
Figure 7.4 - 4 Lift RT-100 with/without Lower Impact Limiter Installed 7-16
Figure 8-1 Flow Information for the Acceptance Tests and Maintenance Program Review .. 8-1

Drawings

All Drawings are included in the Safety Analysis Report, Volume II, Proprietary Information

1 GENERAL INFORMATION

ROBATEL Technologies (RT), LLC requests an evaluation and approval from the Nuclear Regulatory Commission (NRC) of this 10 CFR Part 71 Application for the Model RT-100 Cask Type B(U)-96 Package (hereinafter RT-100) for shipment of Low-Level Radioactive Waste Material. Robatel Technologies, LLC is a part of the ROBATEL GROUP that has designed and fabricated many casks over the company's history. Therefore, this application is an extension of this previous history and uses the experience of the company to provide the nuclear industry with additional capability.

RT has used this 10 CFR Part 71 Application as a method for describing in sufficient detail and with accompanied safety analysis the RT-100 design for NRC evaluation and certification under the RT Company Quality Assurance Program [Ref. 1] . The following 10 CFR Part 71 [Ref. 2] Application subsequent Chapters and Sections will describe the design and operation of the RT-100 cask. The objective of this Chapter of the application is to provide a General Information that feeds information to later Sections in this application according to Figure 1-1 on the following page.

This RT-100 cask meets the following general requirements for all packages:

- The smallest overall dimension of the RT 100 is not less than 10 cm (4 in.).
- The outside of a RT-100 incorporates a feature that, while intact, is evidence that the package has not been opened by unauthorized persons.

1.1 Proposed Use/Model Number/CSI

The RT-100 cask is proposed to package and transport contaminated spent resins and spent filters. The proposed cask model number is the "RT-100."

This application does not request the packaging and/or transport of fissile material in quantities exceeding those exempted from consideration in accordance with 10 CFR 71.15 [Ref. 2]and thus, the Criticality Safety Index (CSI) in non-applicable

Figure 1-1 Information Flow for General Information

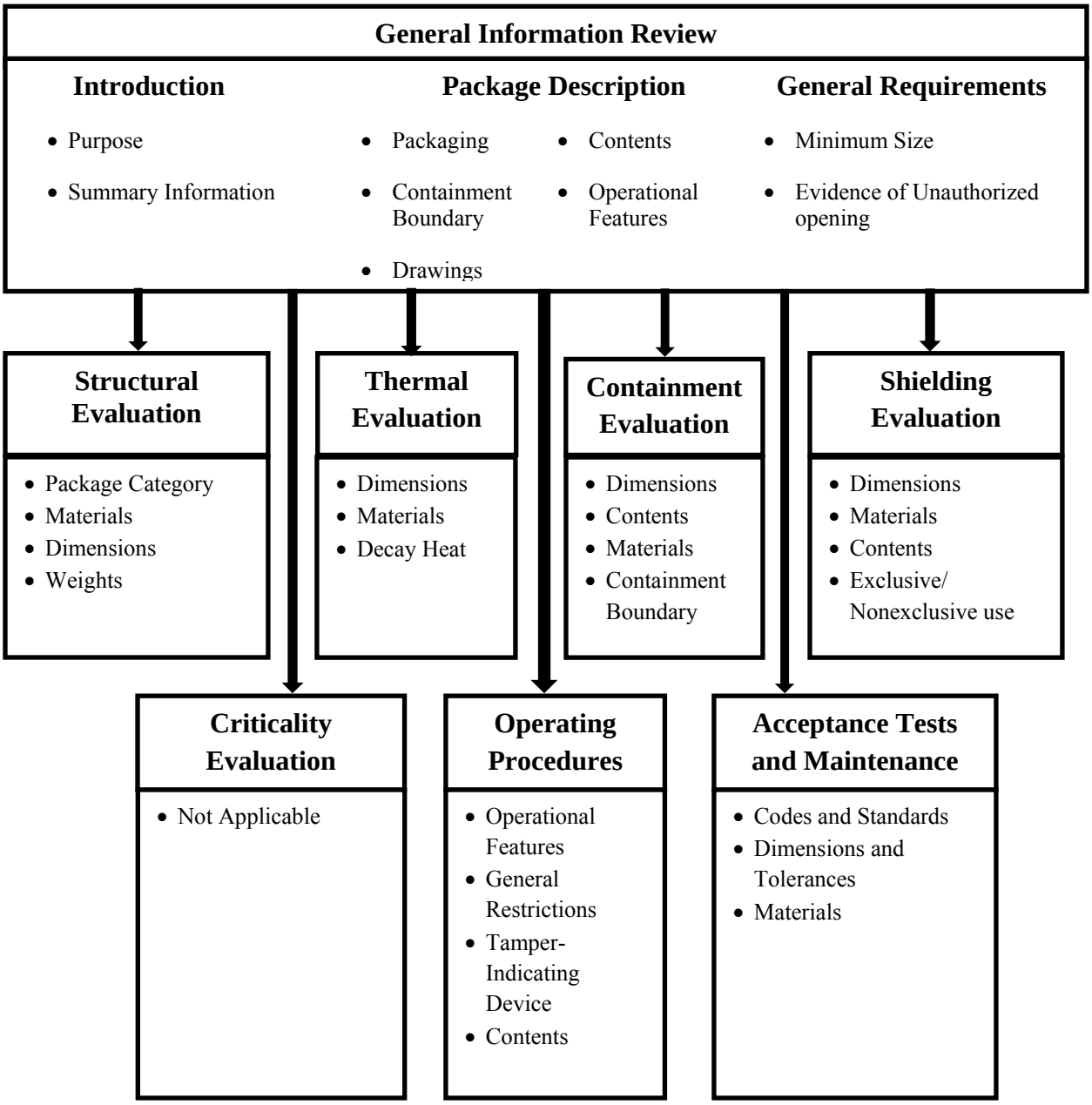

1.2 Package Description

Section 1.2 provides a summary of all design aspects of the RT-100. A general arrangement of the RT-100 cask is included in Appendix 1, Volume II, Proprietary Information. The general arrangement depicts the package dimensions and the materials of construction. Figure 1.2-1 shows the major components of the RT-100 as an exploded artist view with the various components labeled.

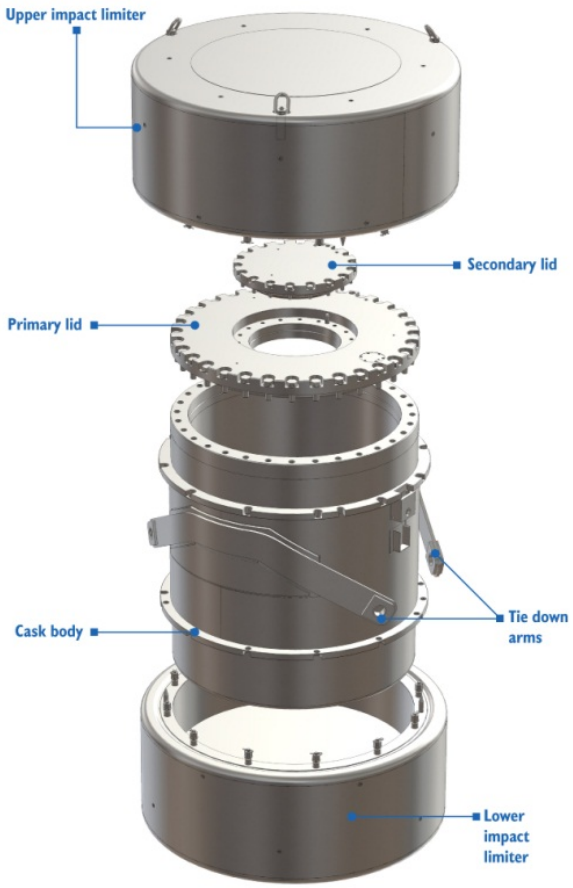

Figure 1.2-1 RT-100 Cask Package Artist Concept

1.2.1 General Description

This Section provides details regarding overall dimensions, weight, containment, shielding, criticality, structural features, heat and markings.

1.2.1.1 Overall Dimensions

The package consists of a stainless-steel and lead cylindrical shipping cask with a pair of cylindrical foam-filled impact limiters installed on each end. The package configuration is shown in Figure 1.2-1.

The internal cavity dimensions are 1730 mm in diameter and 1956 mm high. The cylindrical cask body is comprised of a 35 mm thick external stainless-steel shell and a 30 mm thick internal stainless-steel plate. The annular space between the shells is filled with 90 mm thick lead.

The base of the cask consists of a 30 mm thick stainless steel bottom plate, a 75 mm thick gamma shield of poured lead, and a 50 mm thick stainless steel bottom forging.

The primary lid consists of a 210 mm thick stainless steel forging. The primary lid is fastened to the cask body with thirty-two (32) M48 hex head bolts.

The secondary lid is made of 100 mm thick stainless steel plate, a 60 mm thick lead gamma shield and a 10 mm thick stainless steel plate. The secondary lid is attached to the primary lid with eighteen (18) hex head bolts.

1.2.1.2 Weight

The maximum gross weight of the RT-100 including impact limiters is 40,734 kg (including the maximum payload weight of 6,804 kg). The minimum (empty) gross weight of the RT-100 including impact limiters is 33,930 kg.

1.2.1.3 Containment Features

The containment vessel of the RT-100 cask consists of the inner shell, the bottom flange, the top flange, the primary lid, the primary lid inner O-ring, the stainless steel vent port cover plate and its inner O-ring, the secondary lid and the secondary lid inner O-ring. The containment system prevents leakage of radioactive material from the cask cavity and allows pre-shipment leakage testing of the assembled cask configuration.

1.2.1.4 Neutron and Gamma Shielding Features

The RT-100 is not designed to carry fissile material or neutron sources (except typical small quantities consistent with contaminated resins and filters as discussed in Chapter 5) and thus, provision of neutron shielding is not required for the RT-100.

In regards to gamma shielding, the RT-100 cask walls provide a shield thickness of 90 mm of lead and 65 mm of stainless steel. The cask bottom end provides a shield thickness of 75 mm of lead and 80 mm of stainless steel. The top end provides a shield thickness of 210 mm of stainless steel for the primary lid and a shield thickness of 60 mm of lead and 110 mm of stainless steel for the secondary lid. The contents will be limited such that the radiological shielding provided will assure compliance with U.S. Department of Transportation (DOT) regulatory requirements.

1.2.1.5 Shielding Features for Personnel Barriers

The RT-100 cask does not require the use of personnel barriers to meet 10 CFR 71 dose rate limits.

1.2.1.6 Criticality Control Features

The RT-100 cask contents are resins and filters from commercial nuclear power plants that contain only trace quantities of fissile nuclides. As such, the contents will meet the requirements of 10 CFR 71.15 to be exempt from classification as fissile material. As a result, the RT-100 does not require any criticality control features.

1.2.1.7 Structural Features – Lifting and Tie-Down Devices

The RT-100 cask employs lifting devices that are a structural part of the package. From the drawings shown in Appendix 1, it can be seen that two lifting pockets are welded to the cylindrical cask body. These pockets engage the arms of a separate lifting yoke that is utilized to

left the package. The lifting pocket retaining pin remains installed when the not in use, rendering the blocks inoperable to be inadvertently used to tie down the cask. Removable lifting lugs are utilized for removal and handling of the primary and secondary lids and the impact limiters. Refer to Section 2.5.1 for a detailed analysis of the structural integrity of the lifting devices.

From the drawings shown in Appendix 1, Volume II, Proprietary Information, it can be seen that the tie-down arms are an integral part of the external cask shell and thus, these arms are considered a structural part of the package. The tie-down arms have holes that are used with shear pins to attach the tie down equipment during transport. These shear pins will remain in place when not in use for tying down the package so that they cannot be inadvertently used to lift the cask. Refer to Section 2.5.2 for a detailed analysis of the structural integrity of the tie-down arms.

1.2.1.8 Structural Features – Impact Limiters

The impact limiters are 2587 mm in outside diameter and extend 480 mm beyond each end of the cask. The impact limiters have external shells, fabricated from stainless-steel, which allow them to withstand large plastic deformations without fracturing. The volume inside the shell is filled with crushable shock absorbing and thermal insulting polyurethane foam. The polyurethane is preformed into blocks and then inserted into the shell to completely fill the void space. The use of preformed foam blocks ensures homogeneous density of the foam blocks. Also, several different foam densities are used to customize the shock absorbing performance of the impact limiters during hypothetical accident conditions. The rationale for use of preformed foam blocks and the use of different foam densities is presented in more detail in Section 2.2.

The top and bottom impact limiters are attached to the cask body via two stainless-steel bolting rings located on the exterior cask body; one bolting ring each for the upper and lower impact limiters, respectively. Each of the impact limiters is equipped with twelve (12) M36 studs and attached to the cask body bolt ring using twelve (12) M36 stainless steel hex head nuts. The purpose of the bolt rings and bolts are to ensure that the impact limiters remain attached to the cask body for all normal and hypothetical accident condition events and allowing for easy removal of the impact limiters during loading/unloading operations.

1.2.1.9 Structural Features - Internal Supporting or Positioning Features

The RT-100 cask has no formal internal supporting or positioning features. It is expected that the waste contents will be pre-packaged into liners and that these liners will be placed into the RT-100 cask cavity. Furthermore, it is expected that waste liners may require appropriate shoring to prevent movement during transit when liner dimensions require such shoring. It is the responsibility of the shipper to provide such shoring to meet the requirements of the DOT.

1.2.1.10 Structural Features – Outer Shell or Outer Packaging

The external surface of the cylindrical cask body is comprised of a 35 mm thick stainless-steel outer shell.

1.2.1.11 Structural Features – Packaging Closure Device

The chief packaging closure device is the primary lid. The primary lid consists of a 210 mm thick stainless steel forging as described in Section 1.2.1.1. The primary lid is fastened to the cask body with thirty-two (32) M48 hex head bolts.

The secondary lid also represents a closure device for the cask and is made of 100 mm thick stainless steel plate with lead shielding and another stainless steel plate as described in Section 1.2.1.1. The secondary lid is attached to the primary lid with eighteen (18) Hex Head bolts.

1.2.1.12 Structural Features - Heat Transfer Features

There are no special devices used for the transfer or dissipation of heat out of the cask. However, the RT-100 does rely upon the insulating properties of the polyurethane foam impact limiters and the carbon fiber thermal shield on the radial surface of the cask body to minimize heat input to the cask during the hypothetical fire accident event. Details of this issue are described more fully in Chapter 3.

1.2.1.13 Structural Features - Packaging Markings

The side of the cask body will be marked with the Model Number of the cask “RT-100”, the Certificate of Compliance No., empty weight, Type B(U)-96, UN 2916 and other required data.

1.2.1.14 Additional Information

- There is one configuration of the RT-100 cask as depicted in the engineering drawings provided in Appendix 1, Volume II, Proprietary Information.
- There are no receptacles on the RT-100.
- Pressure test ports are provided between the twin O-ring seals for both the primary and secondary lids and the vent port cover plate. These ports facilitate leak testing of the package in accordance with ANSI N14.5 [Ref. 3].
- The vent port is provided for venting pressures within the containment cavity which may be generated during transport and prior to lid removal. Each port is sealed with an EPDM gasket. Specification information for all seals/gaskets is contained in Chapter 4.
- The RT-100 does not rely on any coolants to perform its function of providing safe transportation of its radioactive contents.
- There are no external/internal protrusions except for the tie-down arms described above.

1.2.2 Contents

The authorized contents of the RT-100 are generally described in the following Sections and more fully described in Chapter 5. The radioactive contents are described to the extent required to demonstrate compliance with 10 CFR 71 requirements relating to the structural, thermal and shielding performance of the cask.

1.2.2.1 Identification and Maximum Quantity

The contents of the RT-100 cask are limited to contaminated resins and filters containing byproduct or otherwise radioactive nuclear material.

The maximum quantity of material is defined as a Type B quantity of radioactive materials not to exceed $3000A_2$. The activity of beta, gamma and neutron emitting radionuclides will not exceed the limits established in the shielding evaluation provided in Chapter 5 and using the procedure presented in Chapter 7.

1.2.2.2 Identification and Maximum Quantity of Fissile Material

The contents to be transported in the RT-100 do not include fissile materials in excess of quantities exempted from classification as fissile material per 10 CFR 71.15. Thus, Section 1.2.2.2 is non-applicable.

1.2.2.3 Physical and Chemical Form – Density, Moisture Content and Moderators

The type form of material is defined as byproduct, source, or special nuclear material in the form of dewatered resins, filters, and mixtures of resins/filters. These materials are contained within secondary container(s).

The chemical form of the contents is resins and filter media contaminated with radioactive materials. The contents may also include the metal housings that the media is used with.

The density of the contents can vary as a function of the quantity and mixtures of resins and filters that may be stored. The contents are limited by the maximum overall weight limit 6,804 kg as described in Section 1.2.12, and the radioactive inventory of the contents are limited as a function of the payload weight as described in Chapter 5.

The moisture content of the materials for transport are limited to no more than 1% free water by volume. There are no moderating constituents for the cask contents.

1.2.2.4 Location and Configuration

The contents will be packaged in secondary containers. Except for close fitting contents, shoring will be placed between the secondary containers and the cask cavity to prevent movement during accident conditions of transport; providing appropriate shoring is the responsibility of the shipper.

1.2.2.5 Use of Non-Fissile Materials as Neutron Absorbers/Moderators

The RT-100 cask contains no non-fissile materials as neutron absorbers/moderators.

1.2.2.6 Chemical/Galvanic/Gas Generation

Chemical Reaction and Galvanic Reactions

The contents will not include any materials that may cause any significant chemical, galvanic, or other reaction.

Gas Generation

Any secondary package containing water and/or organic substances may generate combustible gases via radio-analytically reactions. The shipper will ensure that the total amount of hydrogen gas in the secondary container generated during previous storage and during twice the expected shipping time will be limited to a molar quantity that would be no more than 5% by volume of the secondary container void at STP conditions.

The determination of hydrogen generation will be made using the methods in NUREG/CR-6673 [Ref. 4], Hydrogen Generation in TRU Waste Transportation Packages. NUREG/CR-6673 provides equations that allow prediction of the hydrogen concentration as a function of time for simple nested enclosures and for packages containing multiple contents packaged within multiple nested confinement layers. The inputs to these equations include the bounding effective $G(H_2)$-value for the contents, the $G(H_2)$-values for the packaging material(s), the void volume in the containment vessel and in the confinement layers (when applicable), the temperature when the package was sealed, the temperature of the package during transport, and the contents decay heat.

For any package delivered to a carrier for transport, the secondary container will be prepared for shipment in the same manner in which the determination for gas generation is made. Shipment period begins when the package is prepared (sealed) and will be completed within twice the expected shipping time.

Neither a hydrogen gas generation determination nor restriction of shipping time is required for any secondary package containing materials with a radioactive concentration less than LSA and shipped within 10 days of preparation (or within 10 days of venting the secondary container).

1.2.2.7 Maximum Weight of Contents and Payload

All contents will be packaged in a secondary container (liner). The maximum gross weight of payload is 6,804 kg including the secondary container (liner).

1.2.2.8 Maximum Decay Heat

The maximum decay heat of the RT-100 contents is 200 watts.

1.2.2.9 Loading Restrictions

Contents that include explosives, non-radioactive pyrophoric, and corrosives (pH less than 2 or greater than 12.5), are prohibited. Pyrophoric radionuclides may be present only in residual amounts less than 1 weight percent. Materials that may auto-ignite or change phase (i.e., change from solid to liquid or gas) at temperatures less than 177 °F, not including water, will not be included in the contents. In addition, as required by 10 CFR 71.43(d) [Ref. 2], the contents will not include any materials that may cause any significant chemical, galvanic, or other reactions.

1.2.2.10 Contents for the Certificate of Compliance

The type and form of material is defined as byproduct, source, or special nuclear material in the form of dewatered resins, spent filters, or mixtures of resins/filters, contained within secondary container(s). The maximum quantity of payload material including contents, secondary containers, and shoring is limited to 6,804 kg. The maximum quantity of material is defined as a Type B quantity of radioactive materials not to exceed 3000 A_2. The activity of beta, gamma and neutron emitting radionuclides will not exceed the limits established in the shielding evaluation provided in Chapter 5 and using the loading table provided in Appendix 7, Volume II, Proprietary Information Section 7.1.1. The contents may include fissile materials provided at least one of the paragraphs (a) through (f) of 10 CFR 71.15 [Ref. 2] is met.

1.2.3 Special Requirements for Plutonium

The RT-100 will not contain plutonium in solid form. Therefore, the requirements of 10 CFR 71.63 [Ref. 2] specifying that more than 0.74 TBq (20 Ci) of plutonium must be in solid form does not apply.

1.2.4 Operational Features

There are no complex operational requirements associated with the package. The various valves, connections, openings, seals, containment boundaries are depicted in the drawings provided in Appendix 1, Volume II, Proprietary Information. There are no piping systems associated with the RT-100 cask.

1.3 Engineering Drawings and Additional Information

Section 1.3 addresses the engineering drawings and additional information associated with the RT-100.

1.3.1 Engineering Drawings

The drawings for the RT-100 are enclosed in Appendix I, Volume II, Proprietary Information. Appendix 1 is considered Proprietary Information and thus, is enclosed only in the Proprietary Version of the SAR. The drawings enclosed in Appendix I contain the following information:

- Safety features (primary and secondary lids, seals, bolts, containment boundary, and shielding)

- Materials list, dimensions, vent and leak test ports and welder requirements
- Weld joint requirements
- Details of gasketed joints

Appendix 1 does not include detailed construction drawings.

1.3.2 Conformance to Approved Design

The RT-100 cask will be fabricated in accordance with the US NRC approved design.

1.3.3 Referenced Pages

All referenced pages are generally available to the public.

1.3.4 Special Fabrication Procedures

Fabrication of the RT-100 involves standard cask fabrication techniques.

1.3.5 Package Category

The RT-100 is categorized as a Type B(U)-96 Package.

1.3.6 Supplemental Information

This application contains no supplemental information.

1.4 References

1. Robatel Technologies, LLC, Quality Assurance Program for Packaging and Transportation of Radioactive Material, 10 CFR 71 Subpart H, Dated January 31, 2012 and NRC Approved on March 21, 2012
2. U.S. Nuclear Regulatory Commission, 10 CFR Part 71--PACKAGING AND TRANSPORTATION OF RADIOACTIVE MATERIAL, dated March 7, 2012

71.15	71.43(d)	71.63

3. American National Standards Institute, ANSI N14.5-1997, Leakage Tests on Packages for Shipment

4. NUREG/CR-6673, Hydrogen Generation in TRU Waste Transportation Packages

1.5 Appendix 1

The Appendix 1 contains Proprietary Information that should be withheld from public disclosure under 10 CFR 2.390. Therefore, they are included in Volume II and classified as Proprietary Information as shown in the Affidavit provided and as requested in 10 CFR 2.390.

Appendix 1.5.1 **Bill of Materials – Pages 1-4 through 1-8, Volume II**

Appendix 1.5.2 **Drawings – Pages 1-9 through 1-14, Volume II**

Drawing 1.5.2.1 **Robatel Transport Package RT-100 General Assembly Sheet 1/2**

Drawing 1.5.2.2 **Robatel Transport Package RT-100 General Assembly Sheet 2/2**

Drawing 1.5.2.3 **Robatel Transport Package RT-100 Cask Sub Assembly Weld Map Cask Body**

Drawing 1.5.2.4 **Robatel Transport Package RT-100 Cask Sub Assembly Weld Map Secondary Lid**

Drawing 1.5.2.5 **Robatel Transport Package RT-100 Cask Sub Assembly Weld Map Lower Impact Limiter**

Drawing 1.5.2.6 **Robatel Transport Package RT-100 Cask Sub Assembly Weld Map Upper Impact Limiter**

2 STRUCTURAL EVALUATION

Chapter 2 describes the structural evaluation for the RT 100 under the RT Company Quality Assurance Program [Ref. 1] and summarizes the results to demonstrate compliance with the structural requirements of 10 CFR Part 71[Ref. 2]. These evaluations also follow nuclear industry standards [Refs. 3 – 20]. Chapter 1, General Information and Chapter 3, Thermal Evaluation provides input to the Structural Evaluation that feeds information to later Sections in this application according to Figure 2-1 on the following page.

The RT-100 cask structural performance under 10 CFR Part 71 normal conditions of transport (NCT) and hypothetical accident conditions (HAC) significantly affects its ability to meet the thermal, containment, shielding and subcriticality requirements. Consequently, results from the structural evaluation are used in the thermal, containment, shielding and criticality (Not Applicable for the RT-100) evaluations.

The foremost structural requirement of the RT-100 cask is to withstand NCT and HAC loadings with sufficient structural integrity to maintain shielded containment. Evaluations in the following sections demonstrate the RT-100 package design satisfies these requirements. Before presenting these detailed evaluations, a general description of the RT-100 cask design which includes complete specifications of the containment boundary is provided.

2.1 Description of Structural Design

Major design features which govern the structural performance of the RT-100 cask under NCT and HAC conditions are the impact limiters (upper and lower) and the cask body including the impact limiter attachment rings, the bolting ring, the primary and secondary lids, the lifting pockets and the tie-down arms. These features are sufficiently designed so that the structural response of the RT-100 cask exceeds all 10 CFR 71 requirements.

Appendix 1, Volume II, Proprietary Information shows the general assembly drawings of the RT-100 Cask Package. The major components, including the impact limiters and cask body, are identified. As subsequently discussed in Section 2.1.1.1, the inner surfaces of the cask body and the primary and secondary lids define the containment boundary of the package. Shielding is provided by the cask bottom and sidewall which contain 75 and 90 mm lead layers, respectively, by the 210 mm thick stainless steel primary lid, and the stainless steel secondary lid which is nominally 170 mm thick with an embedded 60 mm thick lead layer.

Figure 2-1 Information Flow for the Structural Review

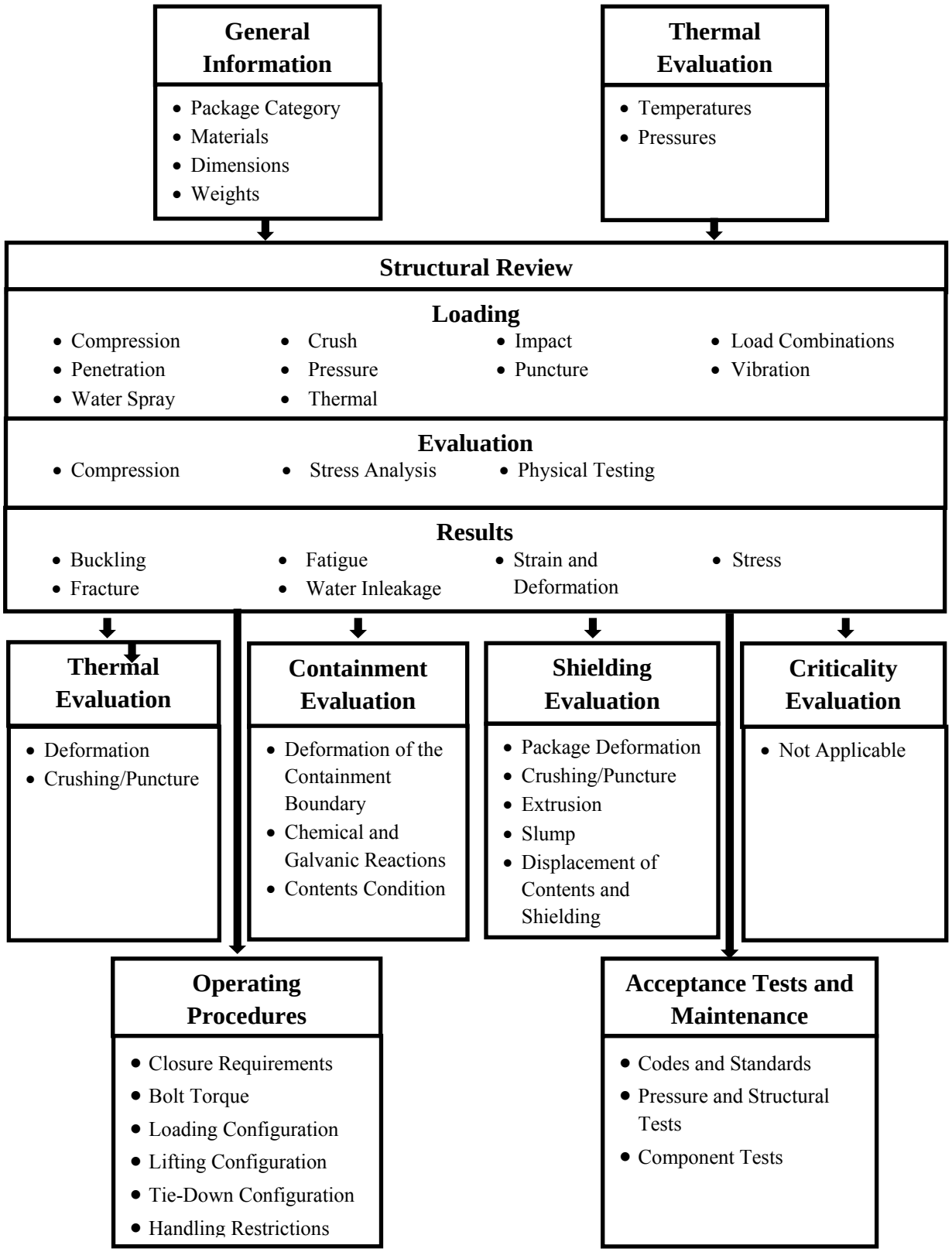

2.1.1 Discussion

The RT-100 cask body is a cylindrical container with an outside diameter of 2060 mm and an overall height of 2321 mm (including lids). The sidewalls are nominally 165 mm thick, consisting of a 90 mm thick lead layer encased by 30 mm thick internal and 35 mm thick external (ASTM A240, Type 304) stainless steel shells, a 5 mm thick ceramic insulation layer, and an outer 5 mm thick protective shell (ASTM A240, Type 304L stainless steel). The cask sidewall design varies from the above description in the regions of the cask body encompassed by the impact limiters, at the impact limiter attachment rings, at the lifting pocket locations, and at the tie-down arm attachment pads. The specific sidewall configuration at each of these locations is further described and fully considered in all subsequent evaluations.

The bottom end of the cask body consists of a 75 mm thick lead layer encased by an 50 mm thick (ASTM A240, Type 304L) stainless steel bottom forging on top and a 30 mm thick external stainless steel bottom plate underneath. The bottom forging is connected to the inner shell with full penetration welds. The bottom plate is connected to the outer shell with a full penetration weld.

The top end of the cask body consists of an upper forging (ASTM A240, Type 304L), and two lids (primary and secondary, both ASTM A240, Type 304L). The upper forging is connected to the inner shell with full penetration welds. The upper forging is connected to the cask outer shell with full penetration welds. Thirty-two (32) M48x2d threaded holes for securing the primary lid are equally spaced along the upper forging top surface. The upper forging top surface also provides a seating surface for the primary lid seals. The primary lid is nominally 210 mm thick. The primary lid has 32 clearance holes near its outer periphery for the M48 bolts (ASTM A354 Gr. BD or equivalent) which secure it to the bolting ring. These clearance holes are sufficiently counter bored to preclude direct impact to the M48 bolts during a drop. Additionally, the primary lid has a central 737 mm diameter through hole with a 2016 mm OD x 82 mm deep counter bore. The counter bore surface has eighteen (18) M36x2d equally spaced threaded holes for securing the secondary lid and also provides a seating surface for the secondary lid seals. The secondary lid is nominally 170 mm thick with an embedded 60 mm thick lead layer. The secondary lid has 18 clearance holes near its outer periphery for the M36 bolts (ASTM A354 Gr. BD or equivalent) used to attach it to the primary lid. The primary and secondary lids have one vent port each which allows for leakage monitoring.

The impact limiters are cylindrically-shaped components which surround the top and bottom ends of the cask as shown in Fig. 1.2-1. Each impact limiter has twelve (12) M36 studs. The impact limiters are attached to the cask with these studs which pass through clearance holes in

the top and bottom impact limiter attachment rings and accept M36 stainless steel nuts. The impact limiters are comprised of segmented polyurethane foam blocks encased in relatively thin stainless steel outer coverings. The outer coverings are 4 mm thick except near the cask where the thickness is 10 mm. The impact limiters are designed to protect the cask by absorbing energy and providing thermal insulation during NCT and HAC tests.

2.1.1.1 Containment Boundary

As shown in Figures 4.1.2-1 and 4.1.2-2, the containment boundary of the RT-100 cask is defined by the following specific features of the cask body and the primary and secondary lid.

- The bottom forging at the bottom end of the cask
- The inner shell that forms the wall of the cask with a full penetration weld
- The full penetration weld between the inner bottom forging and the inner shell bottom
- The top forging at the top of the cask
- The full penetration weld between the upper forging and inner shell top
- The primary lid and inner O-ring
- The vent port cover plate and inner O-ring
- The secondary lid and inner O-ring

2.1.2 Design Criteria

The RT-100 cask design satisfies the normal conditions of transport (NCT) requirements of 10 CFR 71.71 [Ref. 2], the hypothetical accident conditions (HAC) requirements of 10 CFR 71.73 [Ref. 2] and complies with "General Standards for All Packages" specified in 10 CFR 71.43 [Ref. 2] and the "Lifting and Tie-Down Standards" specified in 10 CFR 71.45 [Ref.2]. This is demonstrated in Sections 2.5.1 and 2.5.2.

The load combinations used in performing the structural evaluations of the RT-100 cask are per Regulatory Guide 7.8 [Ref. 3].

The RT-100 cask is primarily constructed of stainless steel (the shells, tie-down arms and lids), high strength alloy steel (bolts), elastomers (seals), lead (shielding), and foam (impact limiters). Acceptance criteria for these different components and materials are developed in the following Sections 2.2.1.

2.1.2.1 Cask Body Criteria (except Bolts and Seals)

The RT-100 cask inner and outer shells and both the primary and secondary lids are all fabricated from ASTM A240 TYPE 304L stainless steel. The criteria for the cask shells and lids

are developed per Regulatory Guide 7.6 [Ref. 4]. (The tie-down arms are also fabricated from stainless steel but their criteria is developed separately in Section 2.5.2).

The allowable stresses under normal conditions (Regulatory Guide 7.6, Regulatory Position 2 [Ref. 4]) are:

$$Pm < Sm$$

$$Pm + Pb < 1.5Sm$$

where, as defined in Ref. 2.12.23 (NB-3213),

Pm = Primary Membrane Stress Intensity

Pb = Primary Bending Stress Intensity

and,

Sm = Stress Intensity Allowable

The allowable stresses under hypothetical accident conditions (Regulatory Guide 7.6, Regulatory Position 6), are:

$$Pm < \text{smaller of } (2.4\ Sm \text{ or } 0.7\ Su)$$

$$Pm + Pb < \text{smaller of } (3.6\ Sm \text{ or } Su)$$

where Su is ultimate strength and all other terms are as previously defined.

2.1.2.2 Bolts

The allowable stresses under normal conditions, per NUREG/CR-6007, are:

$$f_t < Sm$$

$$f_t^{max} < 3Sm \text{ if } Su < 689 \text{ MPa}$$
$$< 2.7Sm \text{ if } Su > 689 \text{ MPa}$$

$$Pm + Pb + \text{residual torsion} < Sm$$

where,

f_t = average tensile stress

f_t^{max} = maximum tensile stress under combined tension and bending and all other terms are as previously defined.

The allowable stresses under hypothetical accident conditions, per NUREG/CR-6007, are:

$$f_t < F_{tb}$$

$$f_v < F_{vb}$$

$$\left(\frac{f_t}{F_{tb}}\right)^2 + \left(\frac{f_v}{F_{vb}}\right)^2 < 1.0$$

where,

f_v = average shear stress

F_{tb} = allowable average tensile stress
= Min (0.7Su, Sy) at temperature

F_{vb} = allowable average shear stress
= Min (0.42Su, 0.6Sy) at temperature and all other terms are as previously defined.

2.1.2.3 Lead

The structural integrity of the RT-100 cask does not depend on lead strength. Thus, no lead strength criteria are specified. Mechanical and thermal properties which are important to the RT-100 cask structural performance are discussed in Sections ###, ### and ###.

2.1.2.4 Foam

Criteria of the polyurethane foam used in the impact limiters are given in Appendix # Impact Limiter Evaluation (proprietary).

2.1.3 Weights and Centers of Gravity

Conservative weight and centers of gravity estimates of the RT-100 cask and its assemblies are shown in Table 2.1.3-1. Refer to the RT 100 General Assembly Sheet 1/2 for identification of assemblies and center of gravity datum.

Table 2.1.3-1 Assembly Weights and Center of Gravity Locations

Assembly[3]	Weight (kg)	Center of Gravity[3] (mm)
Lower Impact Limiter	2,450	516
Cask Body	24,500	1,446
Primary Lid	3,670	2,716
Secondary Lid	870	2,737
Upper Impact Limiter	2,550	2,812
Total Assembly	34,040	1,650
Payload	6,805[1]	1,434 min.[3]
Total Assembly	40,845[2]	1,620 min.[3]

Notes:
1. Maximum.
2. A minimum weight of 41,000 kg was used in all structural evaluations.
3. Determined using payload center of gravity at 10% of cask interior height below or above the cask interior geometric centerline.

As shown in Table 2.1.3-1, the center of gravity of the empty RT-100 cask is approximately 1650 mm above the bottom of the cask. This is just 20 mm lower than the 1630 mm elevation of the center of the inner cavity. Further, the maximum payload weight is less than 17% (= 6,805/40,845x100%) of the loaded cask weight. Thus, payload weight and/or center of gravity variations will not result in large changes to the loaded RT-100 cask center of gravity. Indeed, locating the payload center of gravity within 10% of the cavity internal height above or below the cavity centerline elevation will move the loaded RT-100 cask center of gravity by no more than +/- 28 mm. Such minor variations will be insignificant during either normal operations or in the event of a hypothetical accident.

2.1.4 Identification of Codes and Standards for Package Design

Since it will be used to transport contents with 3,000 A_2 (as defined in 10 CFR 71.4 [Ref. 2]), the RT-100 cask is a Type B, Category II package per Regulatory Guide 7.11 [Ref. 5]. Thus, the codes and standards used in the design of the RT-100 cask are selected based on guidance provided in Regulatory Guide 7.6 and NUREG/CR-3854 [Ref. 6] for packages used to transport Category II contents.

Per NUREG/CR-3854, the package containment system is designed per the ASME Code, Section III, Subsection ND [Ref. 7] and the tie-downs are designed per Subsection NF [Ref. 8].

These codes are applicable to the RT-100 cask design they were developed for components of similar material, loading and consequences of failure as the RT-100 cask.

In addition, several regulatory guides and NUREGs were used to design and evaluate the RT-100 package. RG 7.8 was used in identifying the load combinations to be used in package design evaluation. RG 7.6 was used to determine the design criteria NUREG/CR-4554 [Ref. 9], was used in evaluating buckling of the containment vessel. NUREG/CR-6007 [Ref. 10] was followed for the bolt evaluations.

2.2 Materials

Material properties used in the RT-100 cask structural analyses are shown in Tables 2-2 and 2-3. Material properties for the structural analyses of the polyurethane foam used in the impact limiter evaluations are provided in Appendix 2, Volume II, Proprietary Information. Properties of both the cask materials and the foam used in the thermal analyses are provided in Section 3.2.1.

2.2.1 Material Properties and Specifications

RT will procure all materials under the Company Quality Assurance Program with the specifications for each material. Regulatory Guides 7.11 and 7.12 do not apply to the RT-100 since using Stainless Steel ASTM A-240 type 304, ASTM A-240 type 304L and ASTM A-240 UNS S31803 precludes brittle fracture under normal conditions of transport and hypothetical accident conditions.

Structural components of the cask body are specified to be ASTM A240 Type 304/304L steel, except for the tie-down straps which are ASTM Type 318 stainless steel. These materials are approved for the construction of the ASME Section III, Subsection ND vessels. The material properties for these materials have been obtained from the ASME Code.

The primary and secondary lids are ASTM A354 Gr. BD material. This material is approved for use in the ASME Section III, Subsection ND vessels. The material properties for this material have been obtained from the ASME Code.

The shielding is specified to be ASTM B-29 lead. This material has been used in numerous radioactive shipping casks over the last 30 years. The material properties are obtained from NUREG/CR-0481[Ref. 11].

EPDM (ASTM D1418) [Ref. X] is used for all O-ring seals and maintain internal pressure. They are also used to determine any leakage on the cask. They serve as one of the boundaries for the cask. These seals have a usable temperature range going from -50°C up to 150°C that meets or exceed the normal conditions of transport and the hypothetical accidental conditions requirements.

Table 2.2.1-1 Cask Temperature-Dependent Material Properties

Material	Temp. (°C)	Strength (MPa)			Young's Modulus (MPa)	Coefficient of Thermal Expansion (10^{-6} m/m)
		Yield (S_y)	Ultimate (S_u)	Membrane Allowable (S_m)		
ASTM A240 Type 304/304L (Dual Certified)	-29	172.4	482.6	115.1	198.6	-
	20	172.4	482.6	115.1	195.2	8.5
	50	166.9	476.7	115.1	192.9	8.7
	100	145.7	451.7	115.1	189.2	8.9
	150	132.1	421.6	115.0	186.1	9.2
	200	121.6	406.1	109.4	182.3	9.5
	250	114.4	397.9	102.7	179.2	9.7
ASTM A240 (UNS No. S31803)	-29	448.2	620.5	258.6	198.6	-
	20	448.2	620.5	258.6	195.2	8.5
	50	437.2	620.5	258.6	192.9	8.7
	100	395.1	617.9	257.1	189.2	8.9
	150	369.9	598.0	246.6	186.1	9.2
	200	354.4	577.5	236.7	182.3	9.5
	250	344.0	565.0	-	179.2	9.7
ASTM A354 Gr. BD	-29	896.3	1034.2	206.8	204.8	-
	20	896.3	1034.2	206.8	201.4	6.4
	50	879.8	1034.2	206.8	199.7	6.5
	100	817.8	1034.2	206.8	196.8	6.7
	150	792.4	1034.2	206.8	193.7	6.9
	200	767.5	1034.2	206.8	191.2	7.1
	250	736.5	1034.2	206.8	187.6	7.3
ASTM B29 Lead	-29	-	-	-	16.75	15.65
	20	-	-	-	15.67	16.05
	50	-	-	-	14.94	16.33
	100	-	-	-	13.73	16.78
	150	-	-	-	12.74	17.35
	200	-	-	-	11.80	18.09
	250	-	-	-	10.70	18.95

Table 2.2.1-2 Cask Temperature-Independent Material Properties

Material	Density (kg/mm^3)	Poisson's Ratio
ASTM A240 Type 304/304L stainless steel	0.00827	0.31
ASTM A240 (UNS No. S31803) stainless steel	0.00827	0.31
ASTM A354 Gr. BD high strength steel	0.00822	0.3
ASTM B29 lead	0.01134	0.4

The properties of the materials of construction for the RT-100 Cask Package have been reviewed for the appropriate specifications to the Nuclear Industry codes and standards. These specifications have been put into place for the design, fabrication, assembly and construction. The specifications are backed by the RT Quality Assurance Program. For example, each material has an appropriate specification identified for control and the properties are consistent with the design codes and standards selected for the RT-100 Cask Package.

RT verifies that the all materials of structural components have sufficient fracture toughness to preclude brittle fracture under normal conditions of transport and hypothetical accident conditions. RGs 7.11 and 7.12 were used to provide criteria for fracture toughness.

RT verifies that all material properties are appropriate for the load conditions (e.g., static or dynamic impact loading, hot or cold temperatures, and wet or dry conditions). RT verifies that all appropriate temperatures at which allowable stress limits are defined are consistent with minimum and maximum service temperatures. RT verifies that all the force-deformation properties for impact limiters are based on appropriate test conditions and temperature.

The M36 and M48 bolts used to secure the lids are ASTM A354 Grade BD high strength steel. Stress intensity allowables for the RT-100 cask body materials are shown in Table 2.2.1-3.

Table 2.2.1-3 Allowable Stresses for Cask Body Materials

			Material		
			ASTM A240 Type 304/304L (dual certified)	ASTM A240 (UNS No. S31803)	ASTM A354 Gr. BD
Yield Stress, S_y		(MPa)	172.4 (1)	448.2 (1)	896.3 (1)
Ultimate Stress, S_u		(MPa)	482.6 (1)	620.5 (1)	1034.2 (1)
Design Intensity Stress (Membrane), S_m		(MPa)	115.1 (1)	258.6 (1)	201.4 (1)
Normal Conditions	Membrane Stress	(MPa)	115.1 (2)	258.6 (2)	434.4 (4)
	Membrane + Bending Stress	(MPa)	172.7 (2)	387.9 (2)	651.5 (3)
	Peak Stress	(MPa)	345.3 (3)	775.8 (3)	1034.2 (4)
Hypothetical Accident Conditions	Membrane Stress	(MPa)	276.2 (4)	620.6 (4)	723.9 (4)
	Membrane + Bending Stress	(MPa)	414.4 (4)	931.0 (4)	1034.2 (4)
	Peak Stress	(MPa)	965.2 (5)	1241.0 (5)	2068.4 (5)

1. Allowable stresses are taken from ASME B&PV Code, Section II, Part D [Ref. 31], by interpolation (see Table 1).
2. Allowable stresses are established per Regulatory Guide 7.6 [Ref. 4].
3. Allowable stresses are established per Regulatory Guide 7.6 [Ref. 4], Regulatory Position 4 and ASME, Section III, Division 3 [Ref. 32], WB-3200 criteria. The limit on this stress component is 3Sm.
4. Regulatory Guide 7.6 does not provide criteria. ASME Section III, Appendix F [Ref. 7] has been used to establish these criteria.
5. Regulatory Guide 7.6 [Ref. 4], Regulatory Position 7 and ASME Section III, Division 3, [Ref. **Error! Reference source not found.**] WB-3221.9 criteria for limiting these stresses to 2Sa at ten (10) cycles results in higher allowable stresses than 2Su. The limits for peak stresses are therefore conservatively set at 2Su.
6. Failure criteria are not needed for the lead since the cask body structural integrity does not depend on lead strength. Elastic properties and density for lead are provided in Table Table 2.2.1-1 and Table 2.2.1-2, respectively. Lead thermal properties are shown in Tables 3.2-1 and 3.2-3.

2.2.2 Chemical, Galvanic, or Other Reactions

The materials used in the fabrication and operation of the RT-100 cask—including coatings, lubricants, and cleaning agents—have been evaluated to determine whether chemical, galvanic, or other reactions among the materials, contents, and environments can occur. All phases of operation—loading, unloading, handling, storage, and transportation—have been considered, in conjunction with the procedures described in Chapter 7, for the environments that may be encountered under normal, off-normal, or accident conditions. Based on the evaluation, there are

no potential reactions that could adversely affect the overall integrity of the cask or the structural integrity and retrievability of the contents from the cask. The evaluation conforms to the guidelines of NRC Bulletin 96-04, "Chemical, Galvanic, or Other Reactions in spent Fuel Storage and Transportation Casks," dated July 5, 1996, and demonstrates that the RT-100 cask meets the requirements of 10CFR71.43(d) [Ref. 2].

2.2.2.1 Component Material Categories

The component materials evaluated are categorized based on similarity of physical and chemical properties and/or on similarity of component functions. The categories of materials that are considered are: 1) stainless/nickel alloy steels; 2) nonferrous metals; 3) shielding materials; 4) criticality control materials; 5) energy absorbing materials; 6) cellular foams and insulation's; 7) lubricants and greases; and 8) seals. These categories are evaluated based on the environment to which they could be exposed during operation or use of the cask.

The cask component materials are not reactive among themselves, with the cask's contents, nor with the cask's operating environments during any phase of normal, or accident condition loading, unloading, handling, storage or transportation operations. Therefore, since no reactions will occur, no gases or other corrosion byproducts will be generated.

2.2.2.1.1 Stainless/Nickel Alloy Steels

No reaction of the cask component steels (stainless or nickel alloy) is expected in any environment, except for the marine environment, where chloride-containing salt spray might initiate pitting of the steels if the chlorides are allowed to concentrate and stay wet for extended periods of time (weeks). Only the external cask surface could be so exposed. The corrosion rate will, however, be so low that no detectable corrosion products or gases will be generated. Additionally, the RT-100 has smooth external surfaces, and ridges and crevices have been limited to minimize the collection of such materials as salts.

Galvanic corrosion between the stainless steels, and the nickel alloy steels will not occur because there is no effective electrochemical potential difference between these metals. No coatings are applied to the stainless, or nickel alloy steels.

There is a significant electrochemical potential difference between austenitic (300 series) stainless steel and lead. Because the lead is not directly exposed to a reactive environment such as water no reaction occurs.

There is no potential for a reaction between stainless steel and any silicone products, fluorocarbon elastomers, dry film lubricants, blended polytetrafluroethylene (PTFE), or ethylene glycol.

Based on the foregoing discussion, there are no potential reactions associated with the stainless steel cask components.

2.2.2.1.2 Nonferrous Metals

There are no nonferrous metals used in the RT-100. Therefore, no electrochemical driving potential exists.

2.2.2.1.3 Shielding Materials

The primary shielding materials used in the RT-100 is lead, which is completely enclosed and sealed in stainless steel. Therefore, there are no potential reactions associated with the cask shielding materials.

2.2.2.1.4 Criticality Control Material

The RT-100 does not contain materials for criticality control. Therefore, no potential reactions associated with these materials exist.

2.2.2.1.5 Energy Absorbing Material

The RT-100 utilizes polyurethane foam for energy absorption in the impact limiters. The foam is completely enclosed (sealed) in stainless steel and there are no potential reactions between the foam and the stainless steel shells. The foam is cured prior to installation. Therefore, no potential reactions associated with the energy absorbing material exists.

2.2.2.1.6 Cellular Foam and Insulation

The RT-100 does not utilize cellular foam or insulation. Therefore, no potential reactions associated with the cellular foam or insulation exists.

2.2.2.1.7 Lubricant and Grease

The dry film lubricants used with the RT-100 meet the performance and general compositional requirements of the nuclear power industry. These lubricants are used primarily on threaded/mechanical connection surfaces. These lubricants are insoluble in most solutions. There are no potential reactions associated with these lubricants or grease.

2.2.2.1.8 Seals

The RT-100 utilizes seals formed from EPDM. EPDM is a synthetic rubber elastomer. Elastomer O-rings are used for transport cask applications because of their excellent short-term

sealing capabilities, ease of handling, and more economical cost. The seal and gasket materials have stable, non-reactive compositions. There are no potential reactions associated with the RT-100 seal materials.

2.2.2.2 General Effects of Identified Reactions

No significant potential galvanic or other reactions have been identified for the RT-100. Therefore, no adverse conditions can result during any phase of cask operations for normal or accident conditions.

2.2.2.3 Adequacy of the Cask Operating Procedures

Based on the results of this evaluation it is concluded that the RT-100 operating controls and procedures presented in Chapter 7 are adequate to minimize the occurrence of hazardous conditions.

2.2.2.4 Effects of Reaction Products

No significant potential chemical, galvanic, or other reactions have been identified for the RT-100. Therefore, the overall integrity of the cask and the structural integrity and retrievability of the contents is not adversely affected for any cask operations throughout the design basis life of the cask. Based on the evaluation, there will be no change in the cask properties, and there will be no binding of mechanical surface, and no degradation of any safety components either directly or indirectly, since there are no significant reactions identified.

2.2.3 Effects of Radiation on Materials

Gamma radiation has no significant effect on metal therefore the radiation produced by the contained radioactivity will not cause any measurable damage to the cask metallic components (stainless steel, carbon steel and lead).

For seals, the absorbed dose in a year is expected to be below 350 rad which is well below the polymer damage threshold of 1×10^5 rad. For the ceramic thermal shield, the absorbed dose is expected to be below 350 rad, but ceramic materials are very insensitive gamma radiation damage. Thus, the ceramic thermal shield is expected to be unaffected by radiation.

2.3 Fabrication and Examination

The following Sections describe the fabrication and examination of the RT-100. This is a summary description with a more detailed write-up in later Sections of the Safety Analysis Report.

2.3.1 Fabrication

The RT-100 packaging is designed as a category II container, as mentioned in Section 2.1.1. Fabrication and procurement of the containment components will be based on ASME B&PV code, section III, subsection ND [Ref. 7]. The other components (non-containment) will be

fabricated based on ASME B&PV code, Section III, subsection NF [Ref. 8]. See Sections 2.1.2 and 2.1.4 for additional information.

2.3.2 Examination

Examination of the RT-100 during and after fabrication is conducted per the requirements of the ASME B&PV code, Section III, Subsection ND-5000 [Ref. 7]. The non-containment components examination is conducted per the requirements of ASME B&PV Code, Section III, Subsection ND-5000 or NF5000 [Ref. 8]. See Chapter 8 for additional information.

2.4 General Requirements for All Packages

The RT-100 meets or exceeds all the requirements in 10 CFR 71.43 [Ref 2]. Regulatory Guide 7.9 [Ref. X] indicates that the following requirements should be addressed in this section:

- The smallest overall dimension is greater than 10 cm (4 in).
- The outside of the cask incorporates a feature, such as a seal, that is not readily breakable and that, while intact, would be evidence that the package has not been opened by unauthorized persons.
- The cask includes a containment system closed by a positive fastening device that cannot be opened unintentionally or by a pressure that may arise within the package.

The following sections describe compliance of the RT-100 with these requirements.

2.4.1 Minimum Package Size

This section is NOT APPLICABLE since the RT-100 has dimensions larger than 10 cm (4 inches). The smallest overall dimension of the cask body is the outer diameter, which is over 200 cm.

2.4.2 Tamper-Indicating Feature

The RT-100 upper impact limiter covers the upper end of the cask including the primary and secondary lids. The impact limiter attachment nuts must be removed in order to remove the cask lids. A tamper-indicating seal is installed on one or more of the studs attaching the upper impact limiter to assure that removal of the impact limiter by unauthorized individuals can be detected.

2.4.3 Positive Closure

The RT-100 design includes a containment system that is bounded by the inner shell, primary lid, secondary lid, and vent port cover plate. Each lid and the cover plate are secured to the cask body by multiple bolts. These bolts are tightened during the loading process to a set torque value that cannot be inadvertently loosened. Additionally, the stress analysis of the bolts presented in Section 2.6.7 demonstrates that the bolts can maintain positive closure during operation.

2.5 Lifting and Tie-Down Standards for All Packages

The RT-100 lifting and tie-down components are evaluated structurally in the following sections. The lifting and tie-down requirements are as specified in 10 CFR 72.45 [Ref. 2].

2.5.1 Lifting Devices

The primary lifting device for the RT-100 is the set of two lifting pockets that are welded to the outer shell of the cask. These lifting pockets are designed to allow the loaded cask to be lifted, after removal of the upper impact limiter, using a lifting yoke. The primary and secondary lids and the upper and lower impact limiters are fitted with threaded bolt holes that accommodate lifting rings used to lift each component.

2.5.1.1 Lifting Design Criteria

All lifting attachments that are a structural part of the RT-100 cask are designed with a minimum safety factor of three against yielding when used to lift the package. The lifting devices are also designed so that any failure of the lifting device under excessive load would not impair the ability of the RT-100 to meet other requirements of 10 CFR 72.45. The design weights used in the lifting evaluation are as follows:

- Fully loaded RT-100 with maximum contents and the lower impact limiter is 38,500 kg
- Primary lid with secondary lid in place is 4,600 kg
- Secondary lid is 900 kg
- Upper impact limiter is 2,700 kg
- Lower impact limiter is 2,600 kg

2.5.1.2 Lifting Device Descriptions

The following RT-100 components are evaluated for lifting in this section:

- Lifting Pockets
- Primary Lid
- Secondary Lid
- Lower Impact Limiter
- Upper Impact Limiter

The lifting pockets are utilized to lift the assembled cask, with the bounding configuration being the cask loaded with the maximum payload weight and the lower impact limiter attached. Additionally, the primary and secondary lids and the upper and lower impact limiters are evaluated for lifts using removable lifting rings.

2.5.1.3 Lifting Device Evaluations

Each device that is used for lifting is evaluated for stresses in the following sections. The details of each evaluation are presented, along with the worst-case stress results and safety factors. Additional details of these calculations are provided in Reference [Ref. 33].

2.5.1.3.1 Cask Body Lifting Evaluation

As previously described, the cask is lifted using the lifting pockets welded to the cask outer shell. The assembled cask is lifted with the upper impact limiter removed to accommodate the connection between the lift yoke and the lifting pockets. The cask lifting load is therefore the total weight of the fully assembled cask, including the payload, but with the upper impact limiter removed and considered to be lifted separately. The lifting pockets are evaluated for the connection stresses, weld stresses and cask body stresses due to the lift. The lifting blocks are considered to be a structural part of the package and therefore are designed with a minimum safety factor of three against yielding.

Lifting Pocket Design Features

Figure 2.5.1.3.1-1 presents the dimensions of the lifting pocket utilized in the following structural evaluation. This figure depicts the pocket as it is attached to the outer shell of the cask body. The pocket is made from a block of 304L stainless steel that is welded to the outer shell of the cask with a 10 mm throat-depth weld that forms a "U" shape along the sides and bottom of the pocket. The pocket is aligned just below the upper impact limiter attachment ring as well, which has a cutout to allow the lift yoke to pass downward and into the pocket. The design loads and material strengths of the lifting pocket base metal and weld materials are as follows:

Vertical Shear Load	P_y = 38500 kg / 2 x 9.81 m/s^2 = 188.8 kN per pocket
Lifting Pocket Yield Strength	F_{lp} = 172.4 MPa (Table 2.2.1-1, conservative)
Weld Strength	F_w = 400 MPa (Table 2.2.1-1, conservative)
Outer Shell Yield Strength	F_{os} = 199.3 MPa (Table 2.2.1-1, conservative)

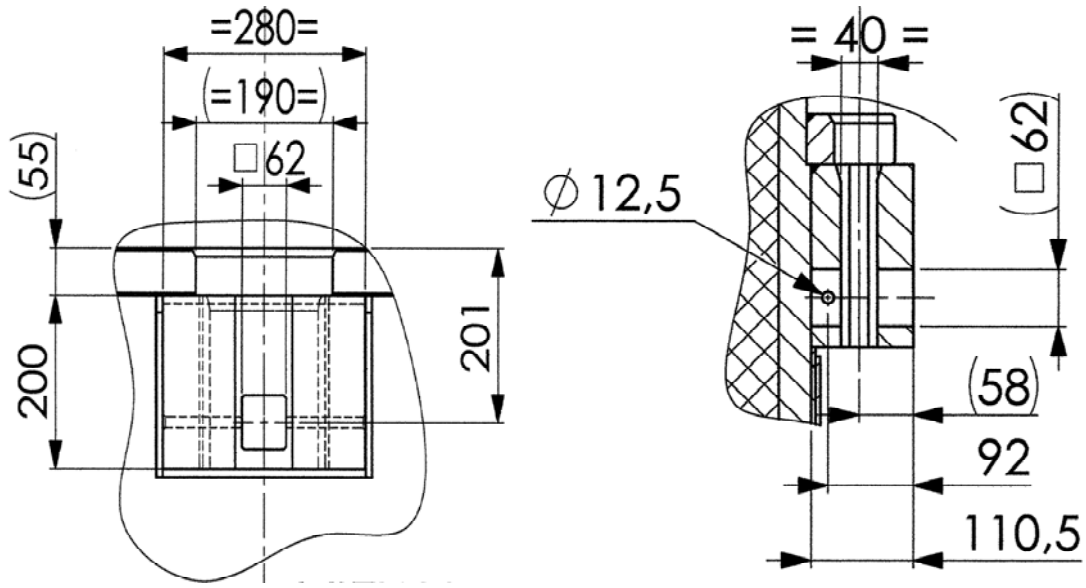

Figure 2.5.1.3.1-1 RT-100 Lifting Pocket Dimensions

Lifting Pocket Weld Stresses

The stresses in the welds attaching the lifting pocket to the cask outer shell are found by applying the shear load from the lifting pockets to the weld around the perimeter of the plate. Based on the safety factors for the lifting pocket, yielding will control the weld evaluation. The stresses and allowables are determined as described in References 25 and 33.

Weld properties are as follows:

d = 0.21 m (including weld)
b = 0.30 m (including weld)
$S_x = (b \times d) + d^2/3 = 0.08\ m^3/m$
$S_y = (b \times d) + b^2/3 = 0.09\ m^3/m$
$C_y = b/2 = 0.15$ m
$C_x = d/2 = 0.11$ m
$A_w = b + 2d = 0.72$ m

Weld Throat Size = 0.01 m

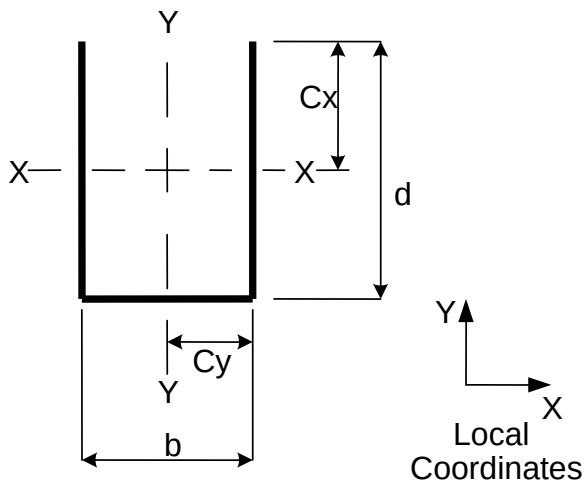

Weld stress is calculated as follows:

Weld Stress = P_y / A_w = 188.8 / 0.72 = 262.2 kN/m

Weld Allowable Stress = 0.6 x F_w x Weld Size x 1000 / 3 = 800 kN/m

Weld Metal Factor of Safety, FS = 800 / 262.2 = <u>3.051</u> > 1.0

Lifting Pocket Shear Allowable = 0.6 x F_{lp} x Weld Size / 0.7071 x 1000 / 3 = 488 kN/m

Lifting Pocket Factor of Safety, FS = 488 / 185.1 = 1.86 > 1.0
Outer Shell Shear Allowable = 0.4 x F_{os} x Weld Size / 0.7071 x 1000 / 3 = 376 kN/m
Outer Shell Factor of Safety, FS = 1.43 > 1.0

The outer shell is constructed of dual-certified 304/304L stainless steel material, and therefore can take credit for the higher allowable of SS304. As a result, the weakest part of the lifting pocket weld joint is the base metal of the lifting pocket.

Lifting Pocket Tear-Out Stresses
The tear-out stresses in the lifting pocket retaining pin hole is calculated as follows:

Tear-out Distance	d_{to} = 0.201 – 0.055 – (0.62/2) = 0.115 m
Lifting Pocket Thickness	t_p = 0.11 – 0.04 = 0.07 m
Tear out area	$A_{to} = d_{to} \times t_p$= 0.115 x 0.07 x 2 = 0.016 m^2
Nominal tear out stress	$\tau = P_y / A_{to}$ = 188.8 / 0.016 / 1000 = 11.7 MPa
Yield strength	S_y = 172.4 MPa
Allowable stress	τ_y = 172.4 / 3 = 57.5 MPa
Factor of Safety	FS = τ_y / τ = 57.5 / 11.7 = 4.9 > 1.0

Lifting Pocket Bearing Stresses
The bearing stress in the lifting pocket from the lift yoke retaining pin is calculated as follows:

Lifting Pocket Bearing Area	A_b = (0.11 – 0.04) x 0.06 = 0.0042
Bearing stress	P_y / A_b = 188.8 / 0.0042 / 1000 = 44.95 MPa
Allowable stress	τ_y = 1.35 x 172.4 / 3 = 77.58 MPa [26]
Factor of Safety	FS = τ_y / τ = 77.58 / 44.95 = 1.73 > 1.0

Cask Body Lifting Evaluation Summary
The evaluations presented above provide the following safety margins:

Lifting Pocket Weld Metal	3.051
Lifting Pocket Base Metal	1.86
Lifting Pocket Tear-Out	4.9
Lifting Pocket Bearing	**1.73**

The minimum safety margin is the shear stress in the lifting pocket. Under excessive load, this would be the failure mechanism for the lifting components that are a structural part of the cask. Failure of the lifting pocket in this region would not affect the outer shell of the cask, and

therefore, failure under excessive load would not affect the ability of the RT-100 cask to perform its intended function.

2.5.1.3.2 Primary Lid Lifting Evaluation

The cask primary lid is lifted using a set of three lifting rings that attach to threaded holes in the top surface of the lid. The maximum lifted weight of the primary lid includes the secondary lid as well. The primary lid lifting points are not sized to lift the loaded cask, and the primary lid will not be lifted while still attached to the cask body. The following paragraphs detail the calculation of the maximum load in each lifting ring, and the stress evaluation of the threaded holes in the primary lid.

Primary Lid Weight	W_{PL} = 3648 kg, assume 3700 kg
Secondary Lid Weight	W_{SL} = 857 kg, assume 900 kg
Total Lid Lifting Weight	W_L = 3700 + 900 = 4600 kg
Number of Lifting Rings	$n_r = 3$

<u>Lifting Ring Working Load</u>

The lifting rings on the primary lid will only be used for lifting when the lid is detached from the cask body, and will be rendered inoperable by removing the rings from the lid when the cask is assembled. The lifting ring rated capacity includes a safety factor of 3, so the allowable for the rings does not have to be reduced by the safety factor.

Lifting Ring Load	$P_r = W_L / n_r$ = 4600 / 3 = 1533 kg
Ring Working Load Limit	$P_{r,max}$ = 3000 kg
Factor of Safety	FS = 3000 / 1533 = 1.96 > 1.0

<u>Lid Metal Tear-Out Stresses</u>

The minimum required thread engagement length is determined in accordance with Reference 27. Since the constants in the equation assume U.S. customary units, the metric units used in this calculation are converted for determination of the required engagement length.

$$\text{Minimum Engagement Length, } L_e = \frac{S_{bt} \times 2 \times A_b}{S_{ct} \times \pi \times n \times D_{s,min} \times \left[\frac{1}{2 \times n} + 0.57735 \times \left(D_{s,min} - E_{n,max}\right)\right]}$$

where:

S_{bt} = Bolt External Thread Tensile Strength, MPa
A_b = Stress Area of Bolt External Threads, mm^2
S_{ct} = Cask Internal Thread Tensile Strength, MPa

n = Number of threads per millimeter
$D_{s,min}$ = Minimum Major Bolt Diameter, mm
$E_{n,max}$ = Maximum Pitch Diameter of Internal Thread, mm

The engagement length equation incorporates the engagement length of Formula 1 [Ref. 27] and the internal thread stripping reduction of Formula 3 and Formula 4 [Ref. 27], which applies when the internal thread material is weaker than the external thread material of the bolt.

Bolt Tensile Strength	S_{bt} = 1034.21 MPa
Bolt Stress Area	A_b = 245 mm^2
Cask Tensile Strength	S_{ct} = 482.6 MPa
Thread Pitch	p = 2.5 mm
Thread Spacing	n = 1 / p = 0.4 threads/mm
Minimum Bolt Diameter	$D_{s,min}$ = 19.623 mm
Maximum Pitch Diameter	$E_{n,max}$ = 17.744 mm
Minimum Engagement Length	L_e = 18.2 mm
Provided Engagement Length	L_{ep} = 32 mm
Factor of Safety	FS = L_{ep} / L_p = 32 / 18.2 = 1.75 > 1.0

Therefore, the lifting ring configuration is acceptable for the required loads. In the unlikely event that failure does occur in the lid threads, no adverse effects on the cask would occur since the threads are a significant distance away from the internals of the cask.

2.5.1.3.3 Secondary Lid Lifting Evaluation

The secondary lid is lifted using a set of three lifting rings that attach to threaded holes in the top surface of the lid. Although the maximum evaluated weight of the secondary lid lift includes only the secondary lid, the hardware is the same as that used for the primary lid. Therefore, the primary and secondary lid could be lifted together, although this is not recommended. The following paragraphs detail the calculation of the maximum load in each lifting ring, and the stress evaluation of the threaded holes in the secondary lid.

<u>Lifting Ring Working Load</u>

The lifting rings on the secondary lid will only be used for lifting when the lid is detached from the cask body, and will be rendered inoperable by removing the rings from the lid when the cask is assembled. The lifting ring rated capacity includes a safety factor of 3, so the allowable for the rings does not have to be reduced by the safety factor.

Lifting Ring Load	$P_r = W_L / n_r$ = 900 / 3 = 300 kg
Ring Working Load Limit	$P_{r,max}$ = 3000 kg

Factor of Safety FS = 3000 / 300 = 10 > 1.0

Lid Metal Tear-Out Stresses

The minimum required thread engagement length is determined in accordance with Reference 27. Since the constants in the equation assume U.S. customary units, the metric units used in this calculation will be converted for determination of the required engagement length.

$$\text{Minimum Engagement Length, } L_e = \frac{S_{bt} \times 2 \times A_b}{S_{ct} \times \pi \times n \times D_{s,min} \times \left[\frac{1}{2 \times n} + 0.57735 \times \left(D_{s,min} - E_{n,max}\right)\right]}$$

where:

S_{bt} = Bolt External Thread Tensile Strength, MPa
A_b = Stress Area of Bolt External Threads, mm^2
S_{ct} = Cask Internal Thread Tensile Strength, MPa
n = Number of threads per millimeter
$D_{s,min}$ = Minimum Major Bolt Diameter, mm
$E_{n,max}$ = Maximum Pitch Diameter of Internal Thread, mm

The engagement length equation incorporates the engagement length of Formula 1 (Oberg) and the internal thread stripping reduction of Formula 3 and Formula 4 (Oberg), which applies when the internal thread material is weaker than the external thread material of the bolt.

Bolt Tensile Strength	S_{bt} = 1034.21 MPa
Bolt Stress Area	A_b = 245 mm^2
Cask Tensile Strength	S_{ct} = 482.6 MPa
Thread Pitch	p = 2.5 mm
Thread Spacing	n = 1 / p = 0.4 threads/mm
Minimum Bolt Diameter	$D_{s,min}$ = 19.623 mm
Maximum Pitch Diameter	$E_{n,max}$ = 17.744 mm
Minimum Engagement Length	L_e = 18.2 mm
Provided Engagement Length	L_{ep} = 32 mm
Factor of Safety	FS = L_{ep} / L_p = 32 / 18.2 = 1.75 > 1.0

Therefore, the lifting ring configuration is acceptable for the required loads. In the unlikely event that failure does occur in the lid threads, no adverse effects on the cask would occur since the threads are a significant distance away from the internals of the cask.

2.5.1.3.4 Upper Impact Limiter Lifting Evaluation

The upper impact limiter is lifted using a set of three lifting rings that attach to threaded holes in the top surface of the limiter. The impact limiter lift is not designed to lift while still attached to the cask body. The following paragraphs detail the calculation of the maximum load in each lifting ring, and the stress evaluation of the threaded holes in the upper impact limiter.

Impact Limiter Weight W_{UL} = 2541 kg, assume 2700 kg
Number of Lifting Rings $n_r = 3$

Lifting Ring Working Load

The lifting rings on the upper impact limiter will only be used for lifting when the impact limiter is detached from the cask body, and will be rendered inoperable by removing the rings from the impact limiter when the cask is assembled. The lifting ring rated capacity includes a safety factor of 3, so the allowable for the rings does not have to be reduced by the safety factor.

Lifting Ring Load $P_r = W_L / n_r = 2700 / 3 = 900$ kg
Ring Working Load Limit $P_{r,max} = 3000$ kg
Factor of Safety $FS = 3000 / 900 = 3.33 > 1.0$

Impact Limiter Metal Tear-Out Stresses

The minimum required thread engagement length to prevent impact limiter material failure is determined in accordance with Reference 27. Since the constants in the equation assume U.S. customary units, the metric units used in this calculation will be converted for determination of the required engagement length.

$$\text{Minimum Engagement Length, } L_e = \frac{S_{bt} \times 2 \times A_b}{S_{ct} \times \pi \times n \times D_{s,min} \times \left[\frac{1}{2 \times n} + 0.57735 \times \left(D_{s,min} - E_{n,max}\right)\right]}$$

where:

S_{bt} = Bolt External Thread Tensile Strength, MPa
A_b = Stress Area of Bolt External Threads, mm^2
S_{ct} = Cask Internal Thread Tensile Strength, MPa
n = Number of threads per millimeter
$D_{s,min}$ = Minimum Major Bolt Diameter, mm
$E_{n,max}$ = Maximum Pitch Diameter of Internal Thread, mm

The engagement length equation incorporates the engagement length of Formula 1 [Ref. 27] and the internal thread stripping reduction of Formula 3 and Formula 4 [Ref. 27], which applies when the internal thread material is weaker than the external thread material of the bolt.

Bolt Tensile Strength	S_{bt} = 1034.21 MPa
Bolt Stress Area	A_b = 245 mm^2
Cask Tensile Strength	S_{ct} = 482.6 MPa
Thread Pitch	p = 2.5 mm
Thread Spacing	n = 1 / p = 0.4 threads/mm
Minimum Bolt Diameter	$D_{s,min}$ = 19.623 mm
Maximum Pitch Diameter	$E_{n,max}$ = 17.744 mm
Minimum Engagement Length	L_e = 18.2 mm
Provided Engagement Length	L_{ep} = 32 mm
Factor of Safety	FS = L_{ep} / L_p = 32 / 18.2 = 1.75 > 1.0

Therefore, the lifting ring configuration is acceptable for the required loads. In the unlikely event that failure does occur in the limiter threads, no adverse effects on the cask would occur since the damage would be limited to tearing of the impact limiter skin under excessive load.

2.5.1.3.5 Lower Impact Limiter Lifting Evaluation

The lower impact limiter is lifted using three of the threaded bolt studs that are utilized to attach the lower limiter to the cask body. As such, it cannot be lifted while attached to the cask body. The following paragraphs detail the calculation of the maximum load in each bolt stud, and the stress evaluation of the bolt threads in the lower impact limiter attachment studs.

Impact Limiter Weight	W_{UL} = 2448 kg, assume 2600 kg
Number of Lifting Rings	n_b = 3

<u>Attachment Bolt Lifting Stresses</u>

The bolts on the lower impact limiter will only be used for lifting when the impact limiter is detached from the cask body, and will be rendered inoperable by securing them to the cask body as part of the assembled cask. Since the arrangement of the cables or straps used to lift the lower impact limiter may vary, the total lifting load is conservatively considered simultaneously in the vertical and horizontal directions.

Bolt Tension	T = W_L x g / n_b = 2600 x 9.81 / 3 = 8502 N
Bolt Shear	V = W_L x g / n_b = 2600 x 9.81 / 3 = 8502 N
Bolt Stress Area	A_b = 0.000817 m^2
Bolt Tensile Stress	σ_1 = T / A_b = 8502 / (0.000817 x 1000) = 10.4 MPa
Bolt Shear Stress	τ = V / A_b = 8502 / (0.000817 x 1000) = 10.4 MPa

Maximum Principal Stress $\sigma_p = \frac{1}{2} \times \left[\sigma_1 \pm \sqrt{\sigma_1^2 + 4 \times \tau^2}\right]$

Maximum Principal Stress $\sigma_{p1} = 16.8$ MPa
Maximum Principal Stress $\sigma_{p2} = -6.4$ MPa
Maximum Shear Stress $\tau_{max} = (\sigma_{p1} - \sigma_{p2}) / 2 = 11.6$ MPa
Bolt Yield Stress $S_y = 896.3$ MPa

Allowable Shear Stress $S_a = 0.6 \times S_y = 537.8$ MPa
Factor of Safety FS = 537.8 / 11.6 = 46.22 > 1.0

Bolt Thread Tear-Out Stresses

The minimum required thread engagement length to prevent impact limiter material failure is determined in accordance with Reference 27. Since the constants in the equation assume U.S. customary units, the metric units used in this calculation will be converted for determination of the required engagement length.

$$\text{Minimum Engagement Length, } L_e = \frac{S_{bt} \times 2 \times A_b}{S_{ct} \times \pi \times n \times D_{s,min} \times \left[\frac{1}{2 \times n} + 0.57735 \times \left(D_{s,min} - E_{n,max}\right)\right]}$$

where:

S_{bt} = Bolt External Thread Tensile Strength, MPa
A_b = Stress Area of Bolt External Threads, mm^2
S_{ct} = Cask Internal Thread Tensile Strength, MPa
n = Number of threads per millimeter
$D_{s,min}$ = Minimum Major Bolt Diameter, mm
$E_{n,max}$ = Maximum Pitch Diameter of Internal Thread, mm

The engagement length equation incorporates the engagement length of Formula 1 [27] and the internal thread stripping reduction of Formula 3 and Formula 4 [27], which applies when the internal thread material is weaker than the external thread material of the bolt.

Bolt Tensile Strength $S_{bt} = 1034.21$ MPa
Bolt Stress Area $A_b = 817$ mm^2
Cask Tensile Strength $S_{ct} = 482.6$ MPa
Thread Pitch p = 4.0 mm

Thread Spacing	$n = 1 / p = 0.25$ threads/mm
Minimum Bolt Diameter	$D_{s,min} = 35.465$ mm
Maximum Pitch Diameter	$E_{n,max} = 33.342$ mm
Minimum Engagement Length	$L_e = 39.0$ mm
Provided Engagement Length	$L_{ep} = 75$ mm
Factor of Safety	$FS = L_{ep} / L_p = 75 / 39 = 1.92 > 1.0$

Therefore, the thread engagement length is acceptable. The impact limiter attachment bolts cannot be used in any way to lift the impact limiters while attached to the cask body. Therefore, no adverse effects on the cask could occur as a result of an excessive load.

2.5.2 Tie-down Devices

The RT-100 cask utilized two sets of tie down arms, as shown on Figure 1.2-1. These tie-down arms are welded to two different tie-down plates that in turn are welded to the outer shell of the cask body. Each set of arms on opposite sides of the cask are designed to cross over and securely position the cask and absorb the latitudinal, longitudinal and vertical forces required by 10 CFR 71.45 [Ref. 2]. The tie-down arms and plates are a structural part of the package, and must withstand the following loads without impairing the safety of the cask:

- Two (2) times the loaded weight of the cask in the vertical direction
- Ten (10) times the loaded weight of the cask in the direction of travel
- Five (5) times the loaded weight of the cask transverse to the direction of travel

These loads are considered to act on the cask simultaneously on the cask and the tie-down arms.

The lifting pockets on the cask body are the only other parts of the cask that could possibly be used to tie down the cask. As such, these pockets are rendered inoperable for tie-down during transport by ensuring that the lift yoke retaining pins are installed in place prior to transport.

2.5.2.1 Tie-down Load Calculation

The maximum forces applicable in each of the three loading directions are calculated in this section. This is accomplished by using the mass of the fully loaded cask along with the gravitational acceleration and the vertical, longitudinal and lateral factors specified in 10 CFR 71.45. The loaded weight of the cask is as specified in Section 1.2.1.2.

Gravitational Acceleration:	$g = 9.81$ m/s^2
Cask Mass:	$M_c = 33930$ kg
Payload Mass:	$M_p = 7060$ kg
Total Mass:	$M = M_c + M_p = 40990$ kg, assume 42000 kg
Total Weight:	$W = M_g = 412.02$ kN

Vertical Acceleration	$d_v = 2$
Axial Acceleration	$d_a = 10$
Transverse Acceleration	$d_L = 5$
Vertical Load	$P_y = M \times g \times d_y = 824$ kN
Axial Load	$P_a = M \times g \times d_a = 4120.2$ kN
Transverse Load	$P_L = M \times g \times d_L = 2060.1$ kN

2.5.2.2 Tie-down Force Calculation

The geometric configuration of the tie-down system is designed so that the resultant tie-down arm tensile loads are tangent to the cask surface in order to minimize the effects of out-of-plane stresses in the cask shell. Figures 2.5.2.2.-1 and 2.5.2.2-2 illustrate the details of the tie-down system geometry. Shear stops are utilized to convert some of the cask loads into turning moments that are restricted by the tie-down arms.

The analytical model for determining the reaction loads required to prevent rotation and translation of the package due to the 10 CFR 71.45 [Ref. 2] applied loads is shown in Figures 2.5.2.2-1 and 2.5.2.2-2. The shear stop forces at the bottom of the package are represented by the orthogonal components of a single force vector, S, making an angle of γ with the global y-axis. The stresses in the members are determined by considering the component loads (10W, 5W, and 2W) individually and superimposing the results. The geometry of the arms have a slight asymmetry so that the tie downs can cross one another which is ignored and average dimensions are used. A detailed force analysis is conducted using the dimensions and notations shown in the figures, and other terms are defined below:

- W: weight of cask, kN
- T_x: tensile force in member 2 and 3 resulting from 5W load, kN
- T_y: tensile force in member 1 and 2 resulting from 10W load, kN
- T_z: tensile force in each member resulting from 2W load, kN
- $T_{1,2,3,4}$: total tensile force in subscripted member, kN
- F_x: total force in the x direction resulting from 5W load, kN
- F_y: total force in the y direction resulting from 10W load, kN
- L: Effective length of tie-down arm, i.e. distance between tie-down tangent point and center of tie-down attachment eye, mm

The forces are derived in detail in Reference 33 and are developed via summing the moments about the center of gravity. Because of the direction of application of forces as shown in Figure 2.5-3, the maximum tie-down arm tensile loads are developed in arm #2. The component and summary forces for this limiting arm are summarized below:

$T_x = 1348.9$ kN
$T_y = 1616.8$ kN
$T_z = 418.4$ kN

$T_{max} = T_x + T_y + T_z = 3384.1$ kN

Unit: mm
R = impace limiter radius = 2587/2
r = cask radius = (2040+60)/2
d = cask C.G. elev. = 1648
t = avg. tie-down eye elev. = 1429
L = total length from the tangent point of the tie-down arm (to the cask body) to the tie-down eye
x' = avg. tie-down eye X axis offset
y' = avg. tie-down eye Y axis offset
z' = cask tangent elev.
a = L cosθ sinϕ
b = L cosθ cosϕ
c = L sinθ

weight	412.02	KN
R	1293.5	mm
r	1050	mm
d	1648	mm
t	1429	mm
L	605	mm
θ	0.514872	rad
ϕ	0.733038	rad
a	352.3409	mm
b	391.3142	mm
c	297.9163	mm
x'	427.9612	mm
y'	1093.901	mm
z'	1726.916	mm

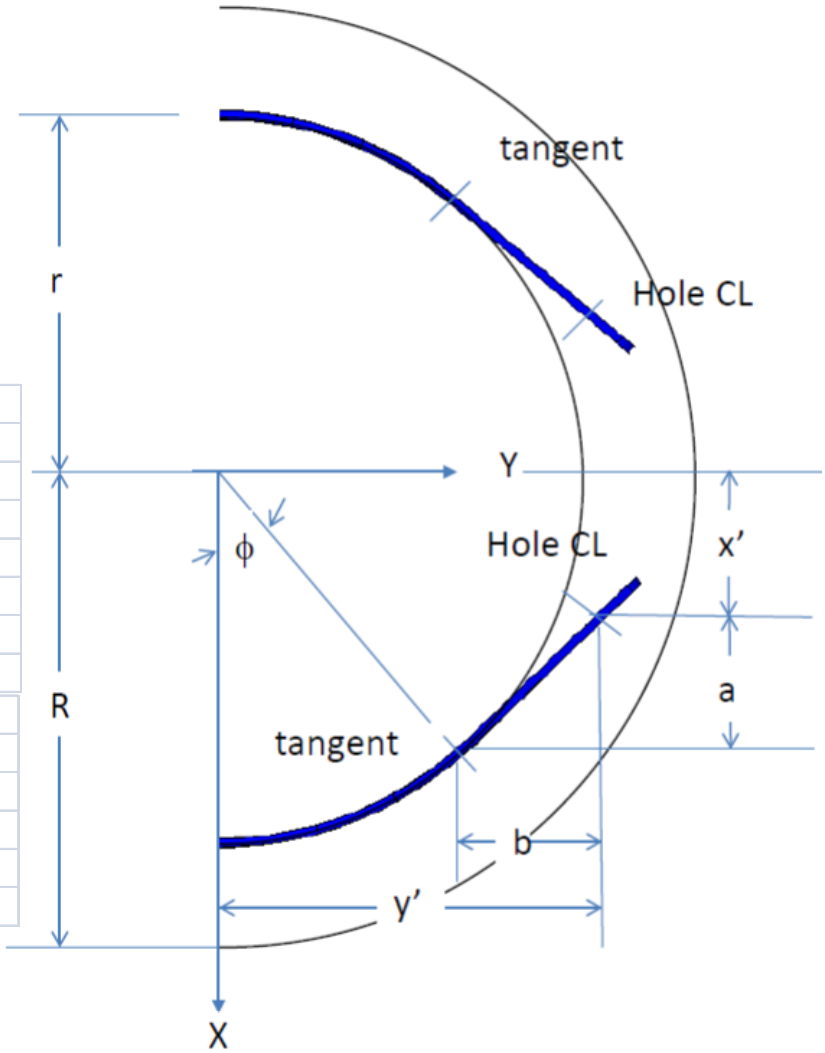

Figure 2.5.2.2-1 RT-100 Tie-Down Arm Geometry

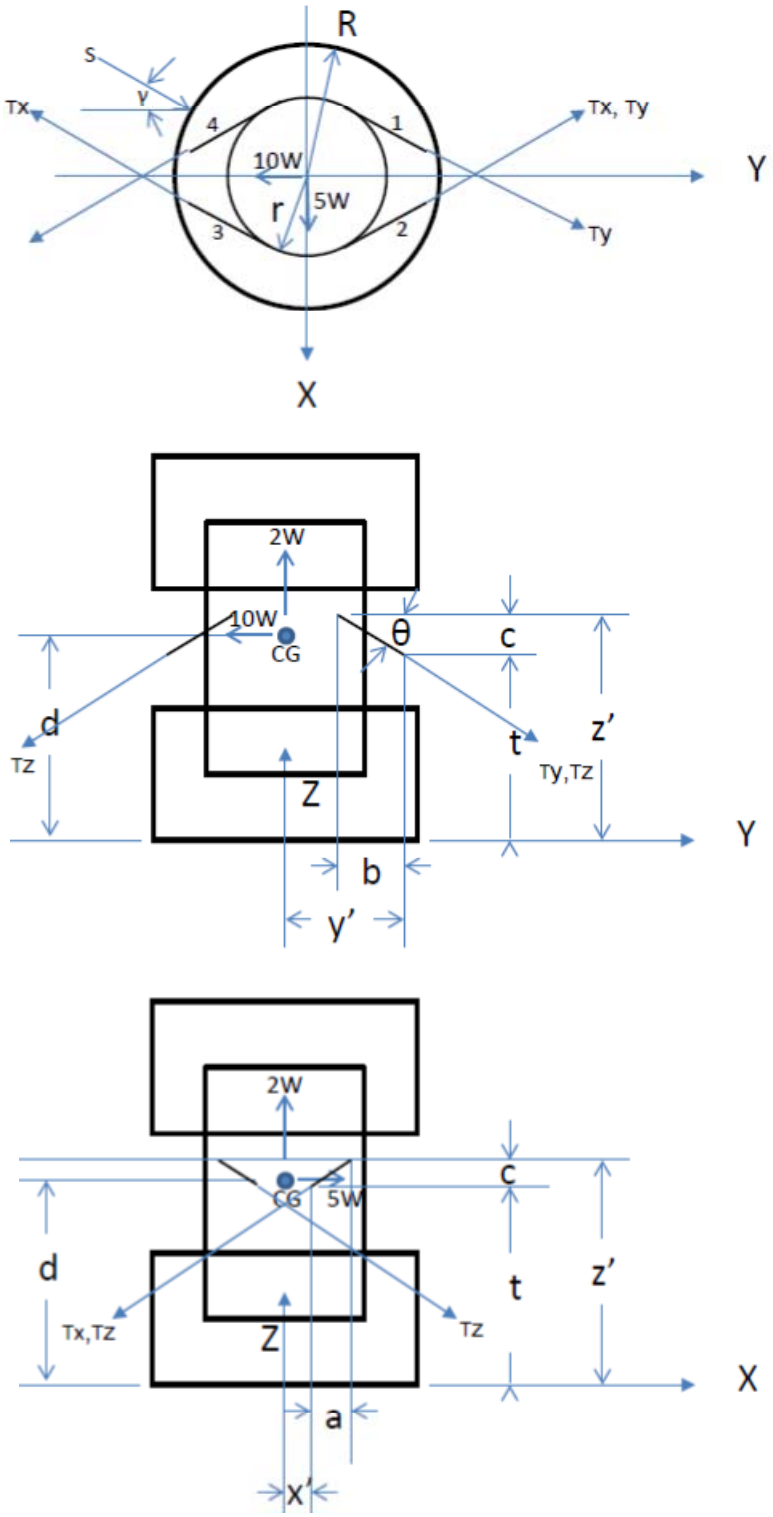

Figure 2.5.2.2-2 RT-100 Tie-Down Free Body Diagrams

2.5.2.3 Tie-down Arm Evaluation

The maximum tie-down arm load of 3384.1 kN was determined as describe in Section 2.5.2.2 above. This load is applied to the tie-down arm design to ensure that stresses are within allowable limits. As show in the drawings presented in Section 1.5.2, the tie-down arm is reinforced in the portion containing the attachment hole. This reinforcement ensures that the loads in this area of reduced cross-section can be transmitted safety into the rest of the tie-down arm. Stresses for the tie-down arm and its connection to the exterior cask shell are calculated as follows:

<u>Arm Tension Stress at Hole</u>
Arm Cross-Sectional Area at Hole, A_{net} = 11,450 mm^2
Arm Tension Stress, $\sigma_{net} = T_{max} / A_{net}$ = 295.6 MPa
Stress Allowable, σ_{allow} = 437.2 MPa (@50°C per Table 2.2.1-1)
Factor of Safety, FS = $\sigma_{allow} / \sigma_{net}$ = 437.2 / 295.6 = <u>1.48</u> > 1.0

<u>Arm Bearing Stress at Hole</u>
Arm Bearing Area at Hole, A_{bear}= 7,650 mm^2
Arm Tension Stress, $\sigma_{net} = T_{max} / A_{bear}$ = 442.4 MPa
Stress Allowable, σ_{allow} = 1.35 x 437.2 MPa = 590.2 MPa (@50°C per Table 2.2.1-1)
Factor of Safety, FS = $\sigma_{allow} / \sigma_{net}$ = 590.2 / 442.4 = <u>1.33</u> > 1.0

<u>Arm Tear-Out Stress at Hole</u>
Arm Tear-out Area, A_{tear} = 18,700 mm^2
Arm Tear-out Stress, $\tau_{tear} = T_{max} / A_{tear}$ = 181.0 MPa
Tear-out Stress Allowable, τ_{allow} = 0.6 x 437.2 = 262.3 MPa
Factor of Safety, FS = $\tau_{allow} / \tau_{tear}$ = 262.3 / 181.0 = <u>1.45</u> > 1.0

<u>Arm Tension Stress at Main Cross Section</u>
Arm Area, A_{arm} = 9,100 mm^2
Arm Tear-out Stress, $\sigma_{arm} = T_{max} / A_{arm}$ = 371.9 MPa
Tear-out Stress Allowable, σ_{allow} = 437.2 MPa
Factor of Safety, FS = $\sigma_{allow} / \sigma_{arm}$ = 437.2 / 317.9 = <u>1.18</u> > 1.0

As shown in the summary above, the stresses in the limiting tie-down arm are below the yield stress allowables.

2.5.2.4 Tie-down Arm & Plate Weld Evaluation

The stresses in the welds attaching the tie-down arms to the tie-down plates and the plates to the cask body are found by applying the loads from the attachment arms to the weld around the perimeter of the plates. The maximum load on the tie-down arm welds will be the sum of the loads in two connecting arms. Thus, from inspection of Figure 2.5.2.4-1, the maximum tie-down arm load is calculated as follows:

Tie-down Arm Weld Force, $F_{total} = 2T_x + T_y + 2T_z = 5151.3$ kN

Weld axial load $Fx = F_{total} \times (b / L) = 3331.8$ kN
Weld vertical load $Fy = F_{total} \times (c / L) = 2536.6$ kN
Weld transverse load $Fz = F_{total} \times (a / L) = 3000.0$ kN

Arm tensile strength: 437.2 MPa (Table 1)
Cask tensile strength: 199.3 MPa (Table 1)
Weld tensile strength: 450 MPa, weld between tie-down arm and plate [Ref. 34]
420 MPa, weld between tie-down plate and cask [Ref. 34]

The weld length, b, is 1586 mm as shown on Figure 2.5.2.4-1. The weld height, d, for the tie-down arm plate is the 260 mm height of the arm. The weld height, d, for the weld between tie-down plate and cask body is calculated as follows, using dimensions provided in the figure:

$d = 620-410*\tan 29.5° = 388.03$ mm

These dimensions and loads are used in the following weld stress calculations.

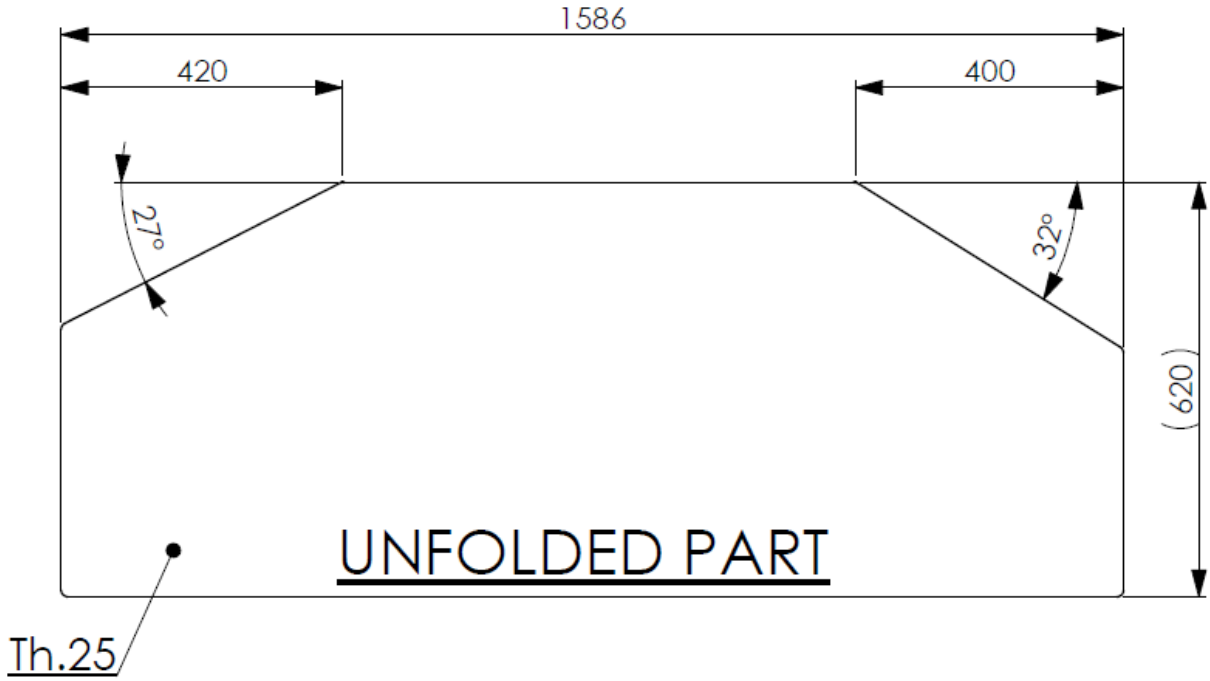

Figure 2.5.2.4-1 RT-100 Tie-Down Arm and Plate Dimensions

Tie Down Arm-to-Plate Weld Stress

The stresses in the welds attaching the tie-down arm to the tie-down plate are found by applying the weld loads as specified in Section 2.5.2.4. The stresses and allowables are determined as described in References 25 and 34.

Weld properties are as follows:

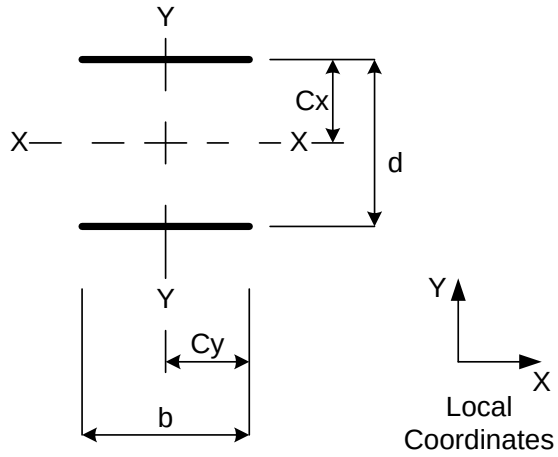

$b = 1.586$ m
$d = 0.260$ m
$C_y = b/2 = 0.793$ m
$C_x = d/2 = 0.130$ m
$A_w = 2 \times b = 3.172\ m^3/m$
$S_x = b \times d = 0.412\ m^3/m$
$S_y = b^2/3 = 0.838\ m^3/m$
$J_w = b\,(3d^2 + b^2) / 6 = 0.719\ m^4/m$

Weld Throat Size = 0.022 m

Weld stress is calculated as follows:

$f_t = (F_z / A_w) + (M_x / S_x) + (M_y / S_y) = 945.8$ kN/m
$f_{vy} = (F_y / A_w) + ((M_z \times C_y) / J_w) = 799.7$ kN/m
$f_{vx} = (F_x / A_w) + ((M_z \times C_x) / J_w) = 1050.4$ kN/m
$f_w = (f_t^2 + f_{vy}^2 + f_{vx}^2)^{1/2} = 1624.0$ kN/m

Weld Allowable Stress = 0.6 x F_w x Weld Size x 1000 = 5940 kN/m
Weld Metal Factor of Safety, FS = 5940 / 1624.0 = <u>3.66</u> > 1.0
Tie-Down Arm Shear Allowable = 0.6 x F_w x Weld Size / 0.7071 x 1000 = 8162 kN/m
Tie-Down Arm Factor of Safety, FS = 8162 / 1624.0 = <u>5.03</u> > 1.0

<u>Tie Down Plate-to-Outer Shell Weld Stress</u>
The stresses in the welds attaching the tie-down plate to the cask outer shell are found by applying the weld loads as specified in Section 2.5.2.4. The stresses and allowables are determined as described in References 25 and 34.

Weld properties are as follows:

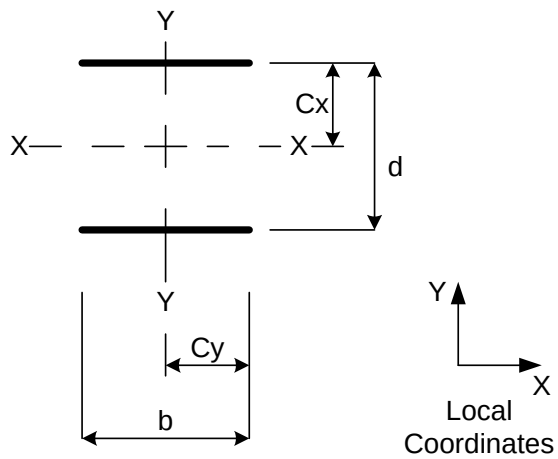

b = 1.586 m
d = 0.388 m
$C_y = b/2 = 0.793$ m
$C_x = d/2 = 0.194$ m
$A_w = 2 \times b = 3.172$ m^3/m
$S_x = b \times d = 0.615$ m^3/m
$S_y = b^2/3 = 0.838$ m^3/m
$J_w = b (3d^2 + b^2) / 6 = 0.784$ m^4/m

Weld Throat Size = 0.022 m

Weld stress is calculated as follows:

$f_t = (F_z / A_w) + (M_x / S_x) + (M_y / S_y) = 945.8$ kN/m
$f_{vy} = (F_y / A_w) + ((M_z \times C_y) / J_w) = 799.7$ kN/m
$f_{vx} = (F_x / A_w) + ((M_z \times C_x) / J_w) = 1050.4$ kN/m
$f_w = (f_t^2 + f_{vy}^2 + f_{vx}^2)^{1/2} = 1624.0$ kN/m

Weld Allowable Stress = 0.6 x F_w x Weld Size x 1000 = 5544 kN/m

Weld Metal Factor of Safety, FS = 5544 / 1624.0 = 3.41 > 1.0

Outer Shell Shear Allowable = 0.6 x F_w x Weld Size / 0.7071 x 1000 = 3720 kN/m

Outer Shell Factor of Safety, FS = 3720 / 1624.0 = 2.29 > 1.0

2.5.2.5 Tie-Down Evaluation Summary

As shown in the previous sections, all components of the tie-down components that are a structural part of the cask maintain positive safety margins when subjected to the simultaneous loadings specified in 10 CFR 71.45 [Ref. 2]. The smallest factor of safety is 1.18 against tie-down arm tension. Therefore, under excessive loading the failure of the tie-down system will occur by yielding in the tie-down arm. This will not impair the package's ability to meet other regulatory requirements since the tie-down arms are welded to a plate that is in turn welded to the cask body. Damage to the tie-down arm will not damage any component integral to the cask body and will therefore not compromise the cask body shell.

2.6 Normal Conditions of Transport

This Section describes the RT-100 evaluation for the normal conditions of transport specified in 10 CFR 71.71[Ref. 2]. The requirements of 10 CFR 71.71 state that the RT-100 cask shall be structurally adequate for the following normal conditions of transport: (1) heat, (2) cold, (3) reduced external pressure, (4) increased external pressure, (5) vibration, (6) water spray, (7) free drop, (8) corner drop, (9) compression, and (10) penetration. During the free drop analyses, the cask impact orientation evaluated is the orientation that inflicts the maximum damage to the cask. The requirements of 10 CFR 71.71also specify that the evaluation of the cask for the normal conditions of transport be evaluated at the most unfavorable ambient temperature in the range from -29°C to +100°C. The normal conditions of transport evaluations presented in this section show that the package satisfies the applicable performance requirements specified in the 10 CFR 71.71. The scale drop testing and analytical analyses demonstrate that there will be no decrease in the RT-100 Cask Package effectiveness as follows:

- No loss or dispersal of contents
- No structural changes reducing the effectiveness of components required for shielding, for heat transfer, or for maintaining subcriticality or containment
- No changes to the package affecting its ability to withstand the hypothetical accident conditions.

The normal conditions evaluations described in the following sections are performed in accordance with the design criteria and load combinations as identified in Section 2.1.2. Each of the following subsections addresses each normal conditions requirement.

2.6.1 Heat

The RT-100 cask body and closure lids are analyzed for structural adequacy in accordance with The thermal evaluation of the RT-100 for the temperatures specified in 10 CFR 71.71(c)(1) is presented in Chapter 3. The thermal evaluation demonstrates that the cask component temperatures are maintained within their safe operating ranges for all normal conditions of transport. The following subsections discuss the structural evaluation of the RT-100 using the appropriate component temperatures as determined in Chapter 3.

2.6.1.1 Summary of Pressures and Temperatures

The pressures and temperatures occurring in the RT-100 cask as a result of the 10 CFR 71 [Ref. 2] normal conditions of transport thermal conditions are an important consideration for the structural evaluations presented in this chapter. The internal pressure induces stresses on the containment system, and the temperatures affect the selection of temperature-dependent material properties as well as the internal pressures that occur as a result of the ambient temperatures and solar insolation specified in 10 CFR 71.71. The material properties utilized are based on the maximum calculate temperatures of each component or higher temperatures which are conservative.

The maximum normal operating pressure evaluation for the RT-100 is presented in Section 3.3.2. As describe in this section, the calculated maximum pressure for normal conditions is 182.7 kPa (26.5 psia). For conservatism, the structural evaluations involving internal pressure use a maximum normal operating condition pressure of 241 kPa (35 psig).

The maximum component temperatures in the RT-100 for normal conditions are presented in Table 3.1.3-1. The temperatures are utilized to determine the stress allowables used in the structural evaluation for the normal conditions of transport.

2.6.1.2 Differential Thermal Expansion

As shown in Table 3.1.3-1, the temperatures of the different components of the cask differ by only a few degrees under normal conditions of transport thermal ambient conditions. This is due in part to the relatively low decay heat of the contents. The RT-100 is evaluated for differential thermal expansion as described Section 2.6.7 in combination with normal pressure and inertial loads under the following conditions:

- Ambient temperature, 38°C
- Initial temperature, 38°C
- Heat transfer to ambient by natural convection, still air
- Heat transfer to ambient by radiation
- Solar insolation as a periodic heat flux applied as 12-hr on and 12-hr off
- Internal heat load as a uniform heat flux, 13.04 W/m^2

2.6.1.3 Stress Calculations

Regulatory Guide 7.6 requires that the range of primary plus secondary stress intensities during normal conditions of transport be less than 3.0 S_m. To evaluate this condition, the range of primary plus secondary stresses for the combined normal events including heat, cold, normal operating pressure, 0.3-m end drop, and 0.3-m side drop conditions are analyzed using the finite element model presented in 2.6.7.2.

2.6.1.4 Comparison with Allowable Stresses

The combined stress results are presented in Tables 2.6.7-5 and 2.6.7-6. Since the margins of safety are all positive, the RT-100, therefore, satisfies the requirements of 10CFR71.71(c)(1) [Ref. 2] for the heat (normal transport) condition.

2.6.2 Cold

The RT-100 cask body and closure lids are analyzed for structural adequacy in accordance with The thermal evaluation of the RT-100 for the temperatures specified in 10 CFR 71.71(c)(2) [Ref. 2] is presented in Chapter 3. The thermal evaluation demonstrates that the cask component temperatures are maintained within their safe operating ranges for all normal conditions of transport. Using the same methodology presented in Section 2.6.1, the RT-100 is evaluated for cold conditions. The following thermal case is used to calculate the thermal stress under cold conditions:

- Ambient temperature, -40°C
- Initial temperature, -40°C
- Heat transfer to ambient by natural convection, still air
- Heat transfer to ambient by radiation
- No solar insolation, in shade
- Internal heat load as a uniform heat flux, 13.04 W/m^2

The combined stress results are presented in Tables 2.6.7-5 and 2.6.7-6. Since the margins of safety are all positive, the RT-100, therefore, satisfies the requirements of 10CFR71.71(c)(2) [Ref. 2] for the cold (normal transport) condition.

2.6.3 Reduced External Pressure

The drop in atmospheric pressure to 24 kPa (3.5 psia), as specified in 10 CFR 71.71(c)(3) [Ref. 2], effectively results in an additional internal pressure in the cask of 77 kPa (11.2 psig). This additional pressure has a negligible effect on the RT-100 because, in Section 2.6.1.1, the cask is analyzed for a normal transport conditions internal pressure of 241 kPa (35 psig). The maximum internal pressure is included in combination with the internal loads (see Tables 2.6.7-5 and 2.6.7-6). Since the margins of safety are all positive, the RT-100, therefore, satisfies the requirements of 10CFR71.71(c)(3) for reduced external pressure.

2.6.4 Increased External Pressure

An increased external pressure of 20 psia (5.3 psig external pressure), as specified in 10 CFR 71.71(c)(4) [Ref. 2], has a negligible effect on the RT-100 because of the thick outer shell and end closures of the cask. Section 2.6.7 addresses many different loading cases, which exceed these prescribed external pressure requirements. Therefore, the requirements of 10 CFR 71.71(c)(4) are satisfied.

2.6.5 Vibration

10 CFR 71.71 (c)(5) requires that "vibration normally incident to transport" be evaluated. The RT-100 package consists of thick section materials that will be unaffected by vibration normally incident to transport, such as over the road vibrations.

2.6.5.1 Vibration Evaluation of the RT-100 Cask Primary Lid Bolts

It is assumed that the cask will be traveling a total distance, D_t, of 1.61 million kilometers at an average speed, V_t, of 70 kilometers/hour during its service life [Ref. 30]. Therefore, the time during which the cask is in transit is:

$$\begin{aligned} t_t &= \frac{D_t}{V_t} \\ &= \frac{1610000}{70.0} \times \frac{3600\,\text{sec}}{1\,\text{hr}} \\ &= 82{,}800{,}000 \text{ seconds} \end{aligned}$$

Assuming that the cask package on the conveyance has a fundamental frequency, F, of 2.5 Hz [Ref. 30], the cask will be subjected to a load cycle of:

$$\begin{aligned} C_L &= F \times t_t \\ &= 2.5 \times 82800000 \\ &= 207{,}000{,}000 \text{ cycles} \end{aligned}$$

Thus, the RT-100 package may be subjected to a cycle range typically associated with high-cycle fatigue (> 10^8 cycles). The endurance limit of the material for the high cycle fatigue can be approximated by using a 60% reduction, r_h, of the ultimate tensile strength [Ref. 26] with an additional 10% reduction, r_g, for the connection surface [Ref. 27]. Thus the endurance limit for the material is:

$$S_a = (1 - r_h) \times (1 - r_g) \times S_{ub}$$

where,

S_{ub} = Bolt Ultimate Stress
= 1034.2 MPa (ASTM A354 Grade B, Table 2.2.1-3)

$S_a = (1-0.60)\times(1-0.10)\times 1034.2$
= 372.3 MPa

NUREG 0128 gives the following RMS vibration load factors for the road travel:

f_v = Vertical Vibration Load Factor
= 0.52

f_L = Longitudinal Vibration Load Factor
= 0.27

f_t = Transverse Vibration Load Factor
= 0.19

The RT-100 package is transported in the vertical orientation. The cask lid will be subjected to vibration in the vertical direction. A notch factor, f_N, of 3.0 will be used, conservatively [Ref. 26]. The vibration stress in the bolts is:

$$s_v = \frac{F_b \times f_N}{A_b}$$

where,

F_b = Bolt Force due to Vibration

$$= \frac{f_v \times W_{Lp} \times g}{N_b}$$

A_b = Bolt Stress Area
= 1470 mm^2 [Ref. 27]

W_{Lp} = Cask Lid Weight
= 3648 kg, use 3650 kg

N_b = Number of Bolts
= 32

$$F_b = \frac{0.52 \times 3650 \times 9.81}{32} \times \frac{1\,\text{kN}}{1000\,\text{N}}$$

$$= 0.58\ \text{kN}$$

$$s_v = \frac{0.58 \times 3.0}{0.001470} \times \frac{1\,\text{MPa}}{1000\ \text{kN}/\text{m}^2}$$

$$= 1.19\ \text{MPa} << S_a = 372.3\ \text{MPa}$$

Since the stress in the bolts is well below the endurance limit of the material, the primary lid bolts will not be subjected to transportation-related fatigue damage during their service life.

The maximum shock loading coefficient for the three orthogonal directions is specified as 2.9 [Ref. 30]. The cask primary lid will be subjected to shock loading during transport. The primary lid closure bolts have been shown to withstand a 125g impact load (Section 2.13.4.2 proprietary), which is much larger than the 2.9W shock loading during transport. The primary lid closure bolts are therefore acceptable for shock loading by comparison.

2.6.5.2 Vibration Evaluation of the RT-100 Cask Secondary Lid Bolts

Per Section 2.6.5.1, the components of the package are into high-cycle fatigue range (> 10^8 cycles). The endurance limit of the material for the high cycle fatigue for the secondary lid bolts is the same as for the primary lid bolts. The cask lid will be subjected to vibration in the vertical direction. A notch factor, f_N, of 3.0 will be used, conservatively [Ref. 26]. The vibration stress in the bolts is:

$$s_v = \frac{F_b \times f_N}{A_b}$$

where,

F_b = Bolt Force due to Vibration

$$= \frac{f_v \times W_{Lp} \times g}{N_b}$$

A_b = Bolt Stress Area

= 817 mm^2 [Ref. 27]

W_{Ls} = Cask Lid Weight

= 857 kg

N_b = Number of Bolts

= 18

All other quantities are as defined in Section 2.6.5.1.

$$F_b = \frac{0.52 \times 857 \times 9.81}{18} \times \frac{1\,\text{kN}}{1000\,\text{N}}$$

$$= 0.24\ \text{kN}$$

$$s_v = \frac{0.24 \times 3.0}{0.000817} \times \frac{1\,\text{MPa}}{1000\,\text{kN}/\text{m}^2}$$

$$= 0.89\ \text{MPa} << S_a = 372.3\ \text{MPa}$$

Since the stress in the bolts is well below the endurance limit of the material, the secondary lid bolts will not be subjected to transportation-related fatigue damage during their service life.

The maximum shock loading coefficient for the three orthogonal directions is specified as 2.9 [Ref. 30]. The cask primary lid will be subjected to shock loading during transport. The secondary lid closure bolts have been show to withstand a 125g impact load (Section 2.13.4.2 proprietary), which is much larger than the 2.9W shock loading during transport. The secondary lid closure bolts are therefore acceptable for shock loading by comparison.

The RT-100 satisfies the requirements for normal vibration incident to transport as required by 10 CFR 71.71(c)(5) [Ref. 2].

2.6.6 Water Spray

Water causes negligible corrosion of the stainless shell of the RT-100 Cask, and the cask contents are protected in the sealed cavity. A water spray as specified in 10 CFR 71.71(c)(6) [Ref. 2] has no adverse impact on the package. The cask surface temperature specified during the water spray is between 38°C and -29°C. Consequently, the induced thermal stress in the cask components is less than the thermal stresses that occur during the extreme temperature conditions for normal transport. Therefore, the requirements of 10 CFR 71.71(c)(6) are satisfied.

2.6.7 Free Drop

The RT-100 Cask is shown to meet the free drop requirements of 10 CFR 71.71 [Ref. 2] through a combination of classic calculations, finite element analyses and scale model drop testing [Ref. 35]. The evaluations include the qualification of the cask cover bolt design for the combined effects of free drop impact force, internal pressures, thermal stress, O-ring compression force, and bolt preload following the NUREG/CR-6007 [Ref. 10] methodology (Appendix 2.14). The combined effects of inertial loads, internal pressures, and thermal stress are considered for packaging components.

2.6.7.1 Methodology

The RT-100 is designed in accordance with ASME, Section III, Subsection ND for Class 1 components (7) [Ref. 2]. Load combinations for the structural analysis of shipping casks for radioactive materials are defined by Regulatory Guide 7.8 [Ref. 3]. The load combinations for all normal and accident conditions and corresponding ASME service levels are shown in Table 2.6.7-1. This table is developed from the design criteria established in ASME Section III [Ref. X]. The table, therefore, defines the cask design and service loadings. ASME service Levels A and D are used for normal and accident conditions, respectively. The analyses methods allowed by the ASME Code are employed. Stress intensities caused by pressure, thermal expansion, and mechanical loads are combined before comparing to ASME code stress allowables, which are listed in Table 2.6.7-2. Material properties used in this evaluation are presented in Section 2.2.1.

Table 2.6.7-1 Load Combinations for RT100 Cask Body Analyses

LOAD		NORMAL		ACCIDENT			
ASME Service Level Load Combinations		A		D			
		1	2	1	2	3	4
Dead Weight	With maximum contents	X	X	X	X	X	X
Thermal Stresses	Hot	X		X		X	
	Cold		X		X		X
Internal Pressure	Normal	X	X	X	X		
	Accident (fire)					X	X
Drop/Impact	0.3 Meters	X	X				
Drop/Impact	9 Meters			X	X		

Table 2.6.7-2 Structural Design Criteria for RT100

ASME Service Level	Stress Criteria
Normal conditions: Service Level A	$P_m \leq S_m$ $P_m + P_b \leq 1.5\ S_m$ $P_m + P_b + Q \leq 3\ S_m$
Accident conditions: Service Level D	$P_m \leq 2.4\ S_m$ or $0.7\ S_u$ (whichever is less) $P_m + P_b \leq 3.6\ S_m$ or $1.0\ S_u$ (whichever is less)

2.6.7.2 Finite Element Analysis

The finite element code ANSYS [Ref. 28] is used to generate a three-dimensional model of the RT-100 cask and determine its response to NCT and HAC (Section 2.7.1). Specifically, a one-half (180°) 3D model of the cask inner and outer shells, outer and inner lids, bottom plate and lead shields is constructed using ANSYS solid elements. The interaction between components is

modeled using gap elements. Stability of the model is assured by using weak springs. Boundary conditions are applied to the model simulating the loading conditions the cask will experience during normal and accident transport conditions. Pressure loads are applied to the cask inner shell to simulate bounding contents loads and internal pressurization. Thermal stresses are calculated using input temperatures from the NCT thermal analyses. Bolt preloads are applied to represent the bolt torque at the time the cask is readied for shipment. Post-processing is accomplished by linearizing the stress across locations where maximum stresses are calculated. The analyses assume linear elastic behavior of the cask. Therefore, calculated stress intensities are compared to appropriate ASME allowables (Table 2.6.7-2) and the margin of safety is calculated.

2.6.7.2.1 Model Description

Finite element analysis methods are used to perform the stress evaluation of the RT-100 Cask for normal and accident free drop conditions. Each drop condition is analyzed using a three-dimensional finite element model using the computational modeling software ANSYS [Ref. 28]. Figure 2.6.7.2.1-1 shows the major components of the cask represented in the model including the inner and outer shells, flange, bottom plate, primary and secondary lids, and closure bolts.

As shown in Figure 2.6.7.2.1-1, the model, which corresponds to half (180°) of the cask body, is generated by de-featuring the SolidWorks® solid model used to develop the manufacturing drawings and exporting the model to a .STEP file format. The .STEP file is imported directly into ANSYS where the finite element model is developed following the guidance presented in ISG-21 (9). The resulting finite element model of the cask body is represented using solid elements, contact elements, mass elements and spring/damper elements (Figure 2.6.7.2.1-2).

The solid portion of the model is constructed using ANSYS solid (SOLID185) elements. Surface-to-surface contact elements are used to simulate the interaction between adjacent components. Specifically, contact between the cask shells and lead shielding is modeled using CONTAC174/TARGE170 surface-to-surface contact elements with zero friction, which allows the lead to float between the inner and outer shells. Contact elements are also used to bond dissimilarly meshed components. To simulate the impact limiters, the interaction between the cask body and impact limiters is modeled using CONTAC52 gap elements (Figure 2.6.7.2.1-3), which acts as a compression only element. The size of the CONTAC52 gaps is determined from nominal dimensions between the impact limiter and cask body. Spring elements (COMBIN14) are inserted automatically during the solution to help stabilize the model. ANSYS assigns low spring stiffness so their presence will not adversely affect the accuracy of the solution.

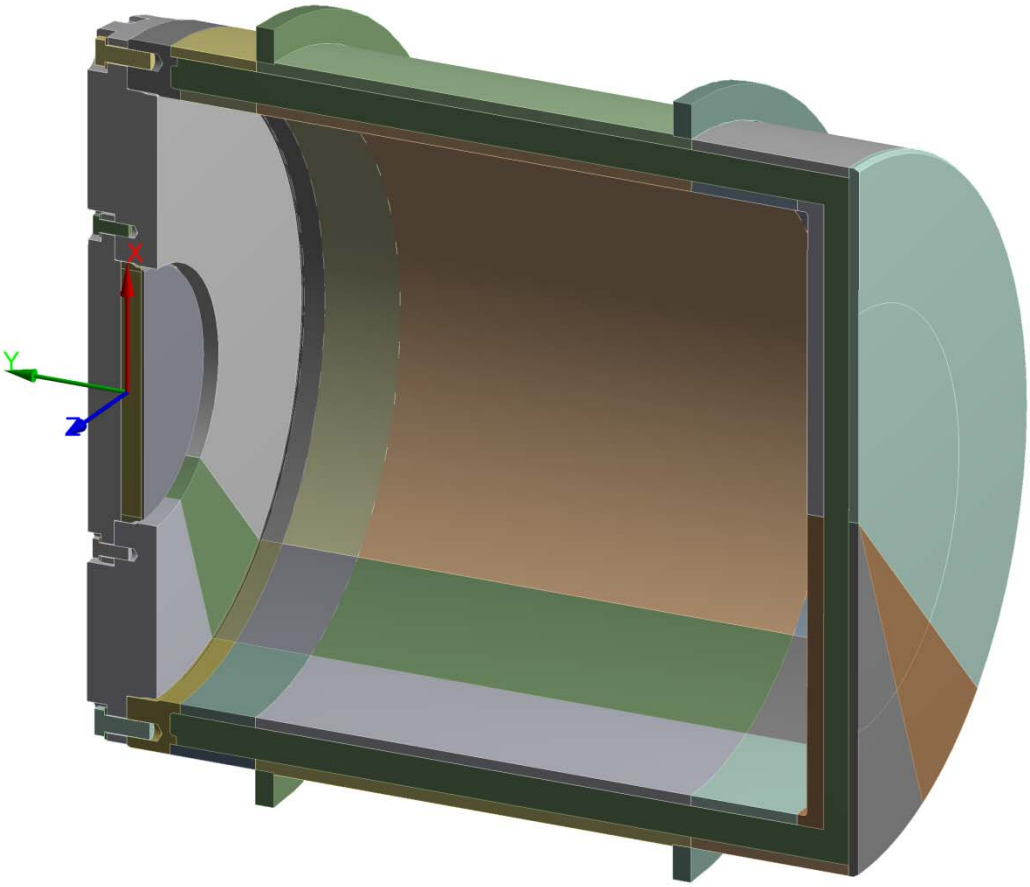

Figure 2.6.7.2.1-1 RT-100 Solid Model

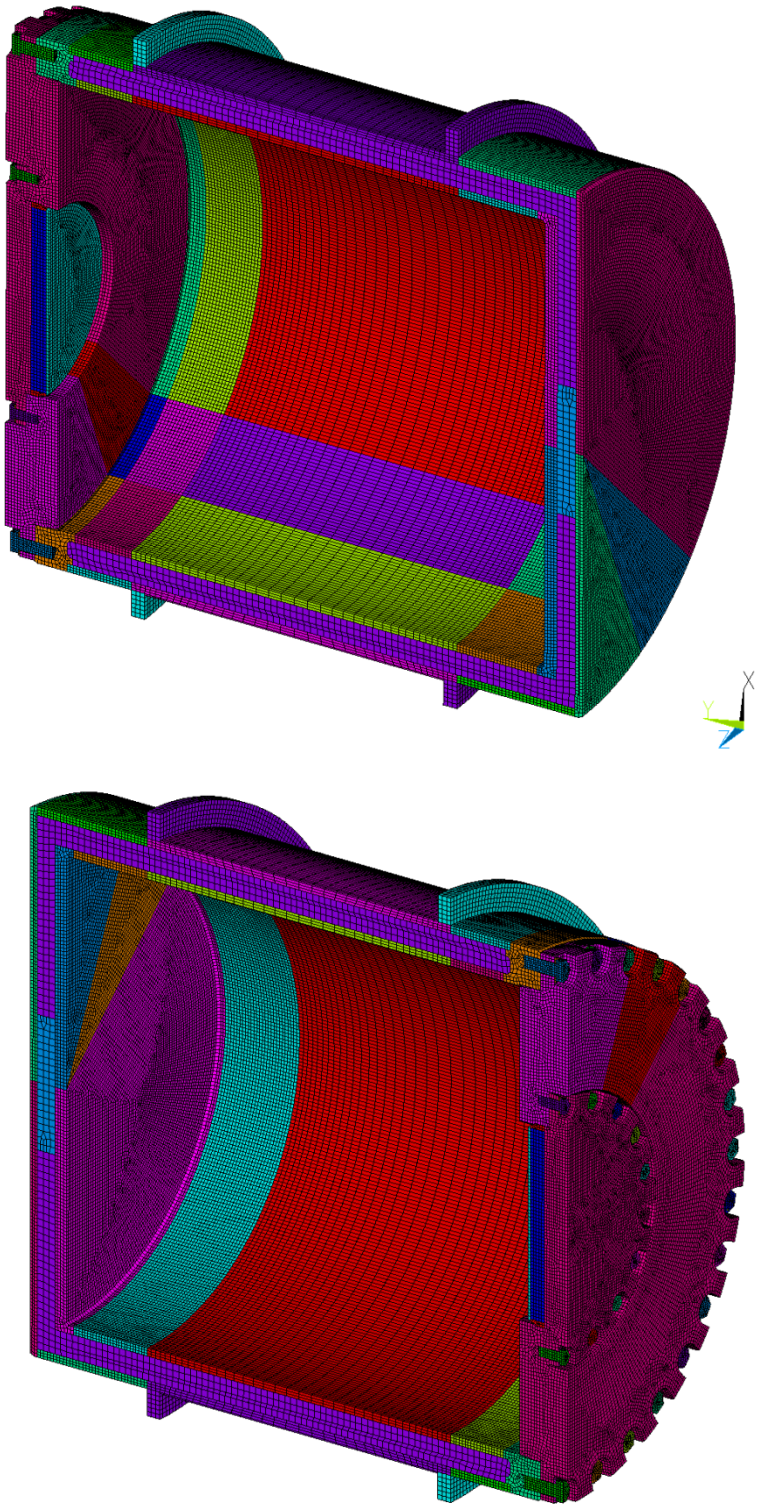

Figure 2.6.7.2.1-2 RT-100 Finite Element Model

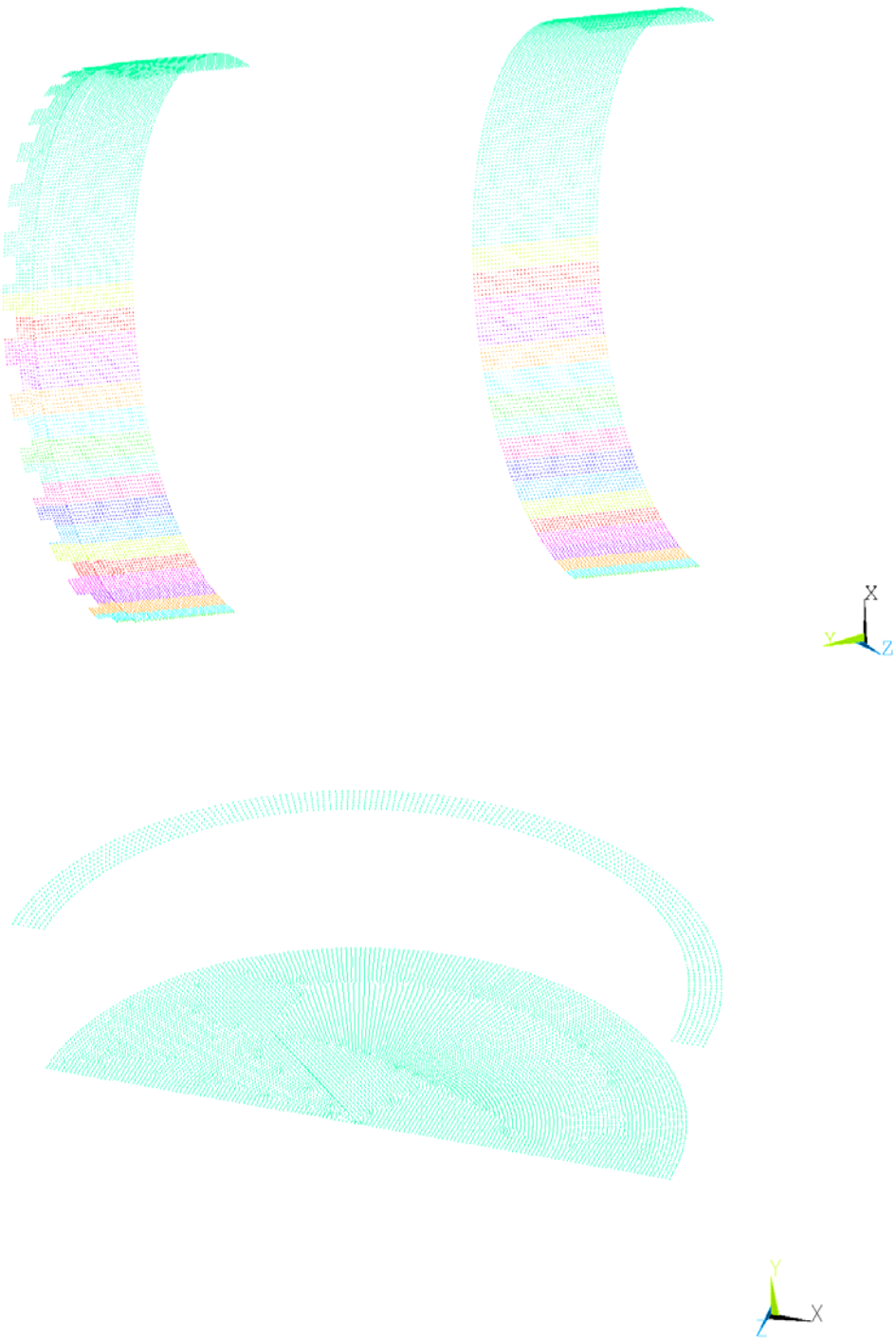

Figure 2.6.7.2.1-3 **Gap Elements Used to Represent the Impact Limiters for Side and End Drop Configurations**

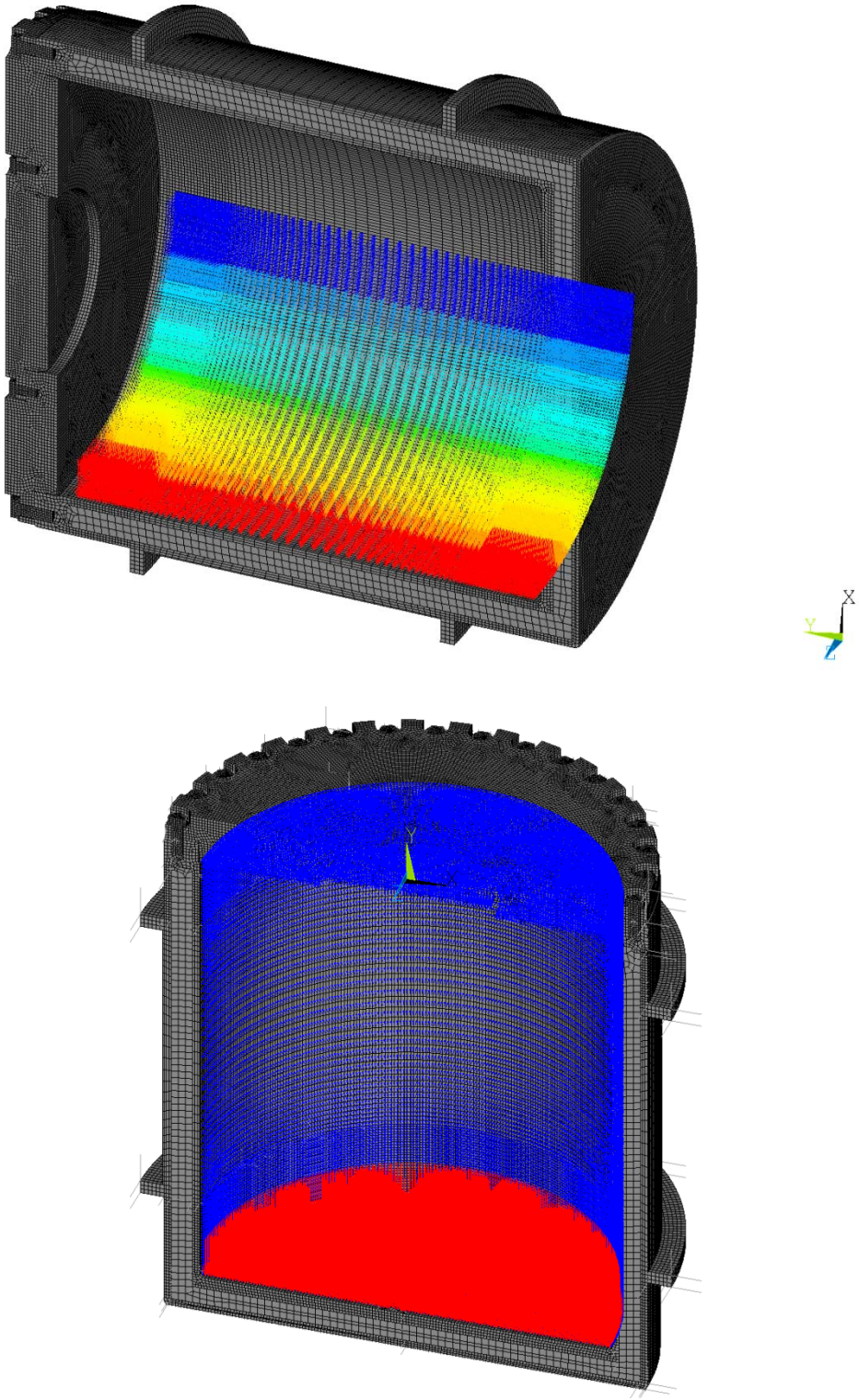

Figure 2.6.7.2.1-4 Pressure Distribution Used to Simulate the Contents

2.6.7.2.2 Boundary Conditions

Boundary conditions are applied to the model simulating the loading conditions the RT-100 will experience during NCT and HAC. The five categories of cask loading considered in the free drop event are closure lid bolt preload, internal pressure load, thermal load, inertial body load and displacement.

- Closure Lid Bolt Preload: The required total bolt preloads on the cask outer and inner lid bolts are 130.6 kN and 72.2 kN, respectively (10). To apply the bolt preload ANSYS [Ref. 28] pre-tension elements (PRETS179) are used to define the 3-D pre-tension section within the meshed bolt. The PRETS179 element uses a single translation degree of freedom to define pretension direction (Figure 2.6.7.2.2-1). The pretension Section is modeled by a set of pretension elements defined by the bolt shaft.

- Pressure Loading: A pressure of 241 kPa (35 psig) is used to envelope the maximum normal operating pressure for all impact loadings considered. For accident conditions a pressure value of 588 kPa (85.3 psig) is used to represent the pressure experienced during fire conditions (11). The internal pressure load is applied as an equivalent static pressure load uniformly applied on the interior surface of the cask.

- Pressure loading contents—cask end drop: For the end drop analyses, the contents weight is assumed to be uniformly distributed on the cask end, over an area determined by the inside diameter of the cask. Therefore, one-half the contents weight of 6,804 kg (15,000 lb) is applied to the cask inner shell bottom plate. The contents pressure load is multiplied by the appropriate g-load to accurately represent the 304.8 mm (1-foot) and 9144 mm (30-foot) end drop. The pressure value is conservatively multiplied by 1.05 to account for the difference between the solid model surface and the tessellated area of the element mesh.

- Pressure loading contents—side drop: For the side drop condition, the contact area between the contents and the cask cavity is approximately 180° (90° on each side of the drop centerline). The inertial load produced by the 6,804 kg (15,000 lb) contents weight is represented as an equivalent static pressure applied on the interior surface of the cask. The pressure is uniformly distributed along the cavity length and is varied in the circumferential direction as a cosine distribution. The pressure value is conservatively multiplied by 1.05 to account for the difference between the solid model surface and the tessellated area of the element mesh. The maximum pressure occurs at the impact centerline; the pressure decreases to zero at locations that are 90° either side of the impact centerline, as illustrated in Figure 2.6.7-5. The following formula is used to determine the contents pressures for the side drop analyses, which vary around the circumference.

This method uses a summation scheme to approximate the integration of the cosine-shaped pressure distribution:

$$F_{total} = \sum_{i=1}^{18} P_{max} A_i \cos(\theta_i)\cos(\theta'_i)$$

$$F_{total} = 6{,}804/2 \text{ kg}$$

where

P_{max} = maximum pressure (at impact centerline)

θ_i = average angle of subtended arc of ith element measured from centerline at point of impact, to obtain vertical component of pressure

i = i^{th} circumferential sector

θ'_i = normalized angle to peak at 0° and to be zero at 90°

A_i = i^{th} circumferential area over which the pressure is applied

Gap elements are defined at both ends of the cask to simulate the pressure applied by the impact limiters during side drop conditions. This is accomplished by defining the gap stiffness as a cosine function from a maximum value 175×10^6 N/m (1×10^6 lb/in) at the center line to 15.3×10^6 N/m (87,156 lb/in) at 85° from the center line of impact, and a minimal value 175×10^3 N/m (100 lb/in) from 90° to 180°). The load distribution that results from the crushing of the impact limiter is shown in Figure 2.6.7-6.

- Thermal: According to Regulatory Guide 7.8 [Ref. 3], four credible thermal conditions must be considered.

  Condition 1 – Hot Case 1:

  a. Ambient temperature, 38°C
  b. Initial temperature, 38°C
  c. Heat transfer to ambient by natural convection, still air
  d. Heat transfer to ambient by radiation
  e. Solar insolation as a periodic heat flux applied as 12-hr on and 12-hr off
  f. Internal heat load as a uniform heat flux, 13.04 W/m^2

  Condition 2 – Hot Case 2:

  a. Ambient temperature, 38°C
  b. Initial temperature, 38°C
  c. Heat transfer to ambient by natural convection, still air
  d. Heat transfer to ambient by radiation
  e. No solar insolation, in shade

f. Internal heat load as a uniform heat flux, 13.04 W/m^2

Condition 3 – Cold Case 1:

a. Ambient temperature, -40°C
b. Initial temperature, -40°C
c. Heat transfer to ambient by natural convection, still air
d. Heat transfer to ambient by radiation
e. No solar insolation, in shade
f. Internal heat load as a uniform heat flux, 13.04 W/m2

Condition 4 – Cold Case 2:

a. Ambient temperature, -29°C
b. Initial temperature, -29°C
c. Heat transfer to ambient by natural convection, still air
d. Heat transfer to ambient by radiation
e. No solar insolation
f. Internal heat load as a uniform heat flux, 13.04 W/m^2

Heat Conditions 1 and 3 bound the differential the worst case thermal expansion between dissimilar materials. Therefore, Heat Conditions 2 and 4 are not considered.

The cask temperature distributions calculated for Conditions 1 and 3 are used as inputs to the ANSYS [Ref. 28] analyses. The ANSYS analyses determines the stresses arising from the thermal expansion of the cask from its initial 21°C condition, including the effects of the differential thermal growth within the components, which are a result of the temperature difference across the cask walls. The cask temperature distributions are also used to determine the values of the temperature-dependent material properties.

The temperatures for the structural analysis are obtained from the results file and database file of the thermal analysis by writing the results to an ASCII file using the ANSYS BFINT command. Nodes for the structural model are transferred to the same coordinate system as used by the thermal run and the thermal results are interpolated for each thermal condition.

- Inertial body load: The inertial effects, which occur during impact, are represented by equivalent static forces, in accordance with D'Alembert's principle. The inertial body load includes the weight of the empty cask and the weight of the cavity contents. Accelerations are calculated in Appendix 2.13. An acceleration of 44g and 52g are applied to the model to simulate end drop and side drop conditions, respectively. The inertial load is applied to the cask body using the ANSYS ACEL command equivalent to the normal and accident conditions accelerations corresponding to the 0.3 meter and 9 meter drop cases. Since the lead shield is attached to the steel shells with frictionless

contact elements, the lead represents the largest physical load applied to the cask structure.

- Displacement boundary conditions: Displacement boundary conditions are applied to enforce symmetry at the cut boundary of the 3D model. All nodes on the symmetry plane are fixed in the UZ direction. The overall model is stabilized by the gap elements (CONTAC52) that represent the impact limiter, which are connected to the cask body with the outer nodes or "ground" nodes representing the impact limiter fixed.

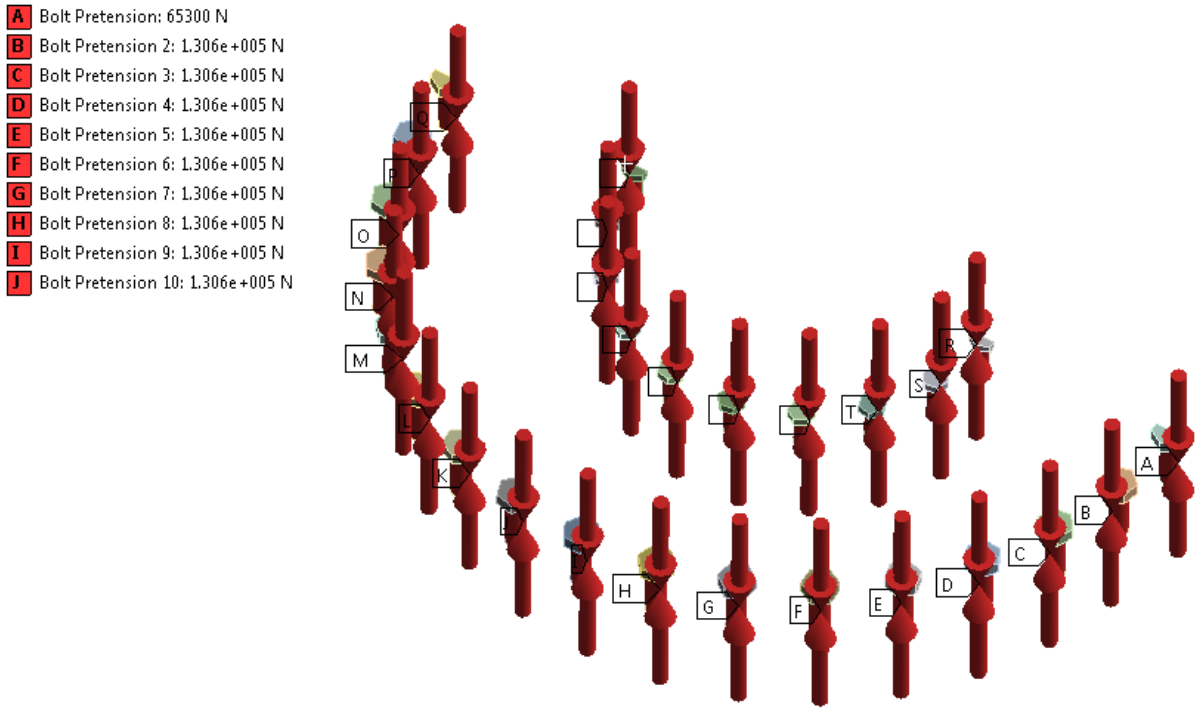

Figure 2.6.7.2.2-1 Bolt Pre-load Using ANSYS Pre-Tension Elements (PRETS179)

2.6.7.3 Side Drop

In accordance with the requirements of 10 CFR 71.71 [Ref. 2], the RT-100 Cask is structurally evaluated for the normal condition of transport 0.3 m side-drop. During the 0.3 meter side-drop event, the cask (equipped with an impact limiter over each end) falls a distance of 0.3 meters onto a flat, unyielding, horizontal surface. The cask strikes the surface in a horizontal position, thereby resulting in a side impact of the cask. The types of loading involved in a side-drop event are lid closure bolt preload, internal pressure load, thermal load, and inertial body load.

Stress results for the 0.3-meter side drop combined loading conditions discussed previously are documented in Table 2.6.7.3-1. The table documents the primary membrane (Pm), primary membrane plus primary bending (P_m+P_b), primary membrane plus primary bending plus secondary peak stress (P_m+P_b+Q) in accordance with the criteria presented in Regulatory Guide 7.6 [Ref. X].

As shown in Table 2.6.7.3-1, the margins of safety when compared to the stress intensity for each category are positive. The most critically stressed component in the system is the inner lid. The minimum margin of safety is found to be +0.8 for primary membrane plus bending stress intensity. The locations of the critical sections correspond to the maximum stress location show in Figures 2.6.7.3-1 through 2.6.7.3-6. The minimum margin of safety for primary plus secondary stress intensity is +1.5.

Table 2.6.7.3-1. NCT Side Drop Stress Summary

	Stress State	Location	S1	S2	S3	SINT	SI (304)	Allowable	MS
			MPa	MPa	MPa	MPa	MPa	MPa	
INNER SHELL	P_m		5.0	-3.8	-31.6	36.6	137.9	137.9	2.8
	$P_m + P_b$	*Inside*	5.3	-3.8	-31.4	36.7	137.9	206.8	4.6
		Center	5.0	-3.8	-31.6	36.6	137.9	206.8	4.7
		Outside	4.7	-3.8	-31.8	36.5	137.9	206.8	4.7
	Hot $P_m + P_b + Q$	*Inside*	5.3	-3.8	-31.4	36.7	137.9	413.7	10.3
		Center	5.0	-3.8	-31.6	36.6	137.9	413.7	10.3
		Outside	4.7	-3.8	-31.8	36.5	137.9	413.7	10.3
	Cold $P_m + P_b + Q$	*Inside*	5.3	-3.8	-31.4	36.7	137.9	413.7	10.3
		Center	5.0	-3.8	-31.6	36.6	137.9	413.7	10.3
		Outside	4.7	-3.8	-31.8	36.5	137.9	413.7	10.3
OUTER SHELL	P_m		4.3	-3.8	-32.3	36.6	137.9	137.9	2.8
	$P_m + P_b$	*Inside*	4.4	-3.8	-32.2	36.5	137.9	206.8	4.7
		Center	4.3	-3.8	-32.3	36.6	137.9	206.8	4.7
		Outside	4.2	-3.9	-32.5	36.7	137.9	206.8	4.6
	Hot $P_m + P_b + Q$	*Inside*	4.4	-3.8	-32.2	36.5	137.9	413.7	10.3
		Center	4.3	-3.8	-32.3	36.6	137.9	413.7	10.3
		Outside	4.2	-3.9	-32.5	36.7	137.9	413.7	10.3
	Cold $P_m + P_b + Q$	*Inside*	4.4	-3.8	-32.2	36.5	137.9	413.7	10.3
		Center	4.3	-3.8	-32.3	36.6	137.9	413.7	10.3
		Outside	4.2	-3.9	-32.5	36.7	137.9	413.7	10.3
FLANGE	P_m		4.1	-3.9	-32.9	37.0	137.9	137.9	2.7
	$P_m + P_b$	*Inside*	4.1	-3.9	-32.7	36.8	137.9	206.8	4.6
		Center	4.1	-3.9	-32.9	37.0	137.9	206.8	4.6
		Outside	4.1	-4.0	-33.0	37.1	137.9	206.8	4.6
	Hot $P_m + P_b + Q$	*Inside*	4.1	-3.9	-32.7	36.8	137.9	413.7	10.23
		Center	4.1	-3.9	-32.9	37.0	137.9	413.7	10.2
		Outside	4.1	-4.0	-33.0	37.1	137.9	413.7	10.2
	Cold $P_m + P_b + Q$	*Inside*	4.1	-3.9	-32.7	36.8	137.9	413.7	10.2
		Center	4.1	-3.9	-32.9	37.0	137.9	413.7	10.2
		Outside	4.1	-4.0	-33.0	37.1	137.9	413.7	10.2
OUTER LID	P_m		18.4	-0.3	-18.4	36.8	137.9	137.9	2.7
	$P_m + P_b$	*Inside*	51.6	9.5	7.4	44.3	137.9	206.8	3.7
		Center	18.4	-0.3	-18.4	36.8	137.9	206.8	4.6
		Outside	-8.9	-12.7	-47.7	38.8	137.9	206.8	4.3
	Hot $P_m + P_b + Q$	*Inside*	62.8	-15.8	-41.9	104.7	137.9	413.7	3.0
		Center	11.4	-12.5	-39.4	50.8	137.9	413.7	7.1
		Outside	12.9	-2.4	-41.7	54.5	137.9	413.7	6.6
	Cold $P_m + P_b + Q$	*Inside*	116.0	61.8	27.6	88.4	137.9	413.7	3.7
		Center	30.1	5.4	-17.7	47.8	137.9	413.7	7.7
		Outside	-4.4	-13.7	-55.0	50.7	137.9	413.7	7.2
INNER LID	P_m		-1.5	-2.6	-56.9	55.4	137.9	137.9	1.5
	$P_m + P_b$	*Inside*	-4.2	-19.9	-121.3	117.1	137.9	206.8	0.8
		Center	-1.5	-2.6	-56.9	55.4	137.9	206.8	2.7
		Outside	15.9	7.2	0.3	15.7	137.9	206.8	12.2
	Hot $P_m + P_b + Q$	*Inside*	2.4	-31.7	-161.7	164.1	137.9	413.7	1.5
		Center	15.2	2.8	-58.4	73.6	137.9	413.7	4.6
		Outside	13.5	-5.2	-23.7	37.2	137.9	413.7	10.1
	Cold $P_m + P_b + Q$	*Inside*	-8.8	-28.7	-148.7	140.0	137.9	413.7	2.0
		Center	4.1	-0.2	-58.8	62.9	137.9	413.7	5.6
		Outside	19.5	4.7	-6.9	26.4	137.9	413.7	14.7

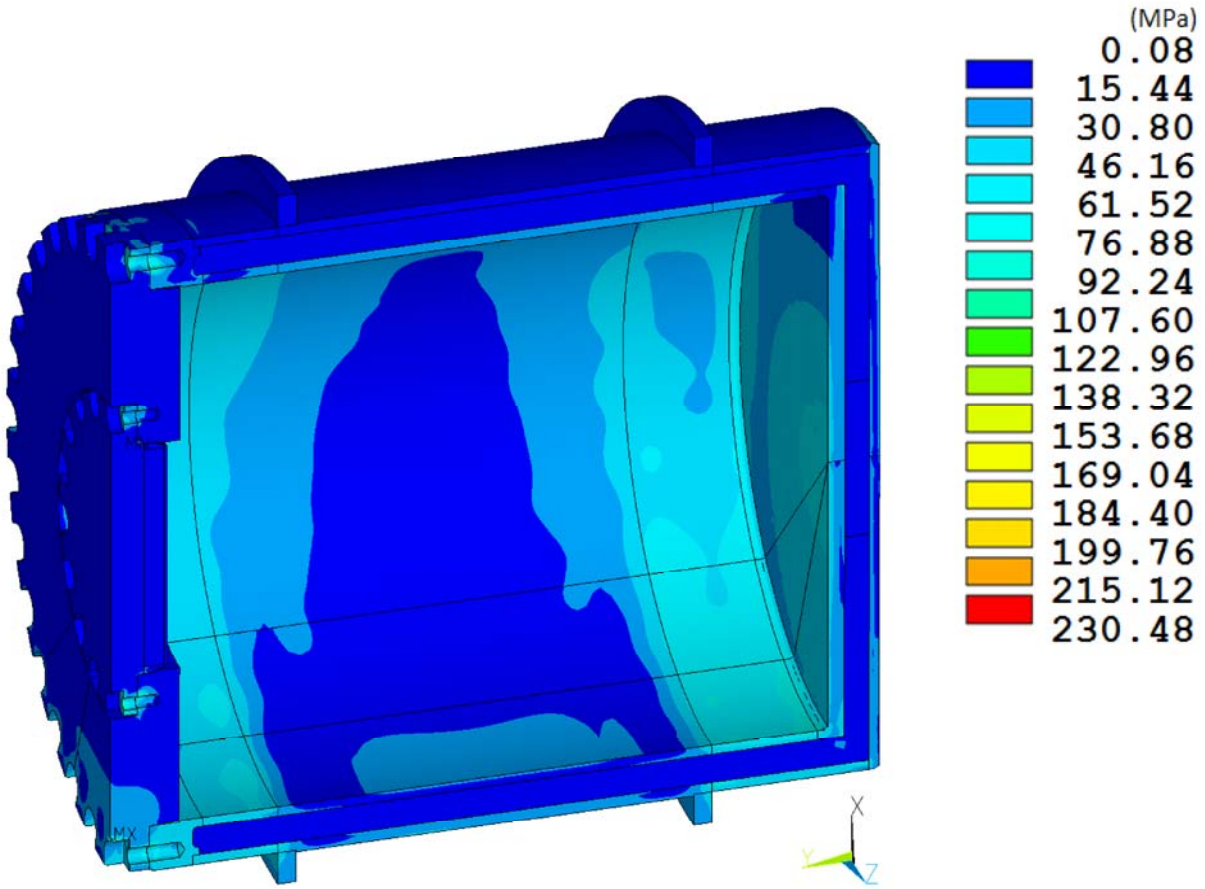

Figure 2.6.7.3-1. RT-100 NCT Side Drop Stress Intensity Results.

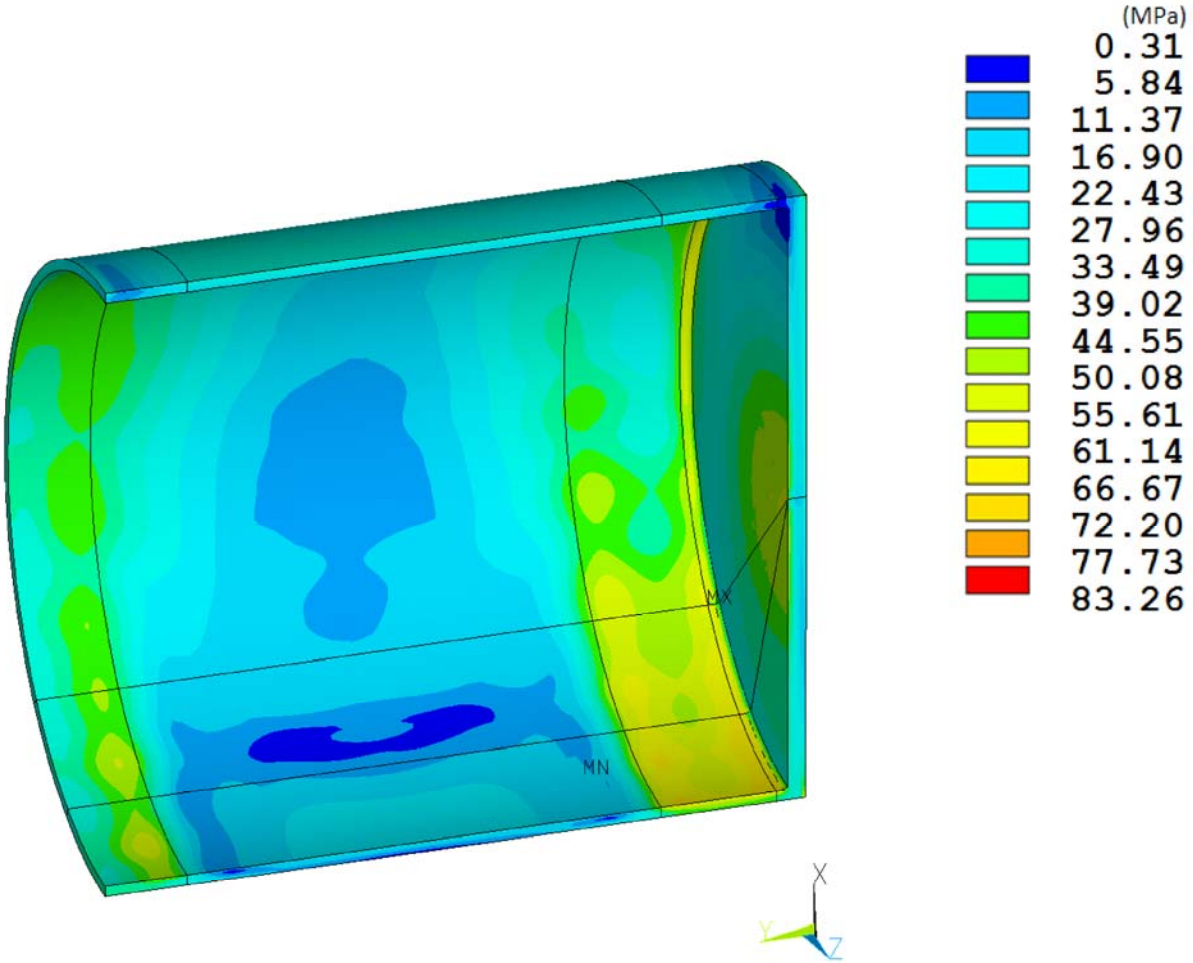

Figure 2.6.7.3-2. RT-100 Inner Shell NCT Side Drop Stress Intensity Results.

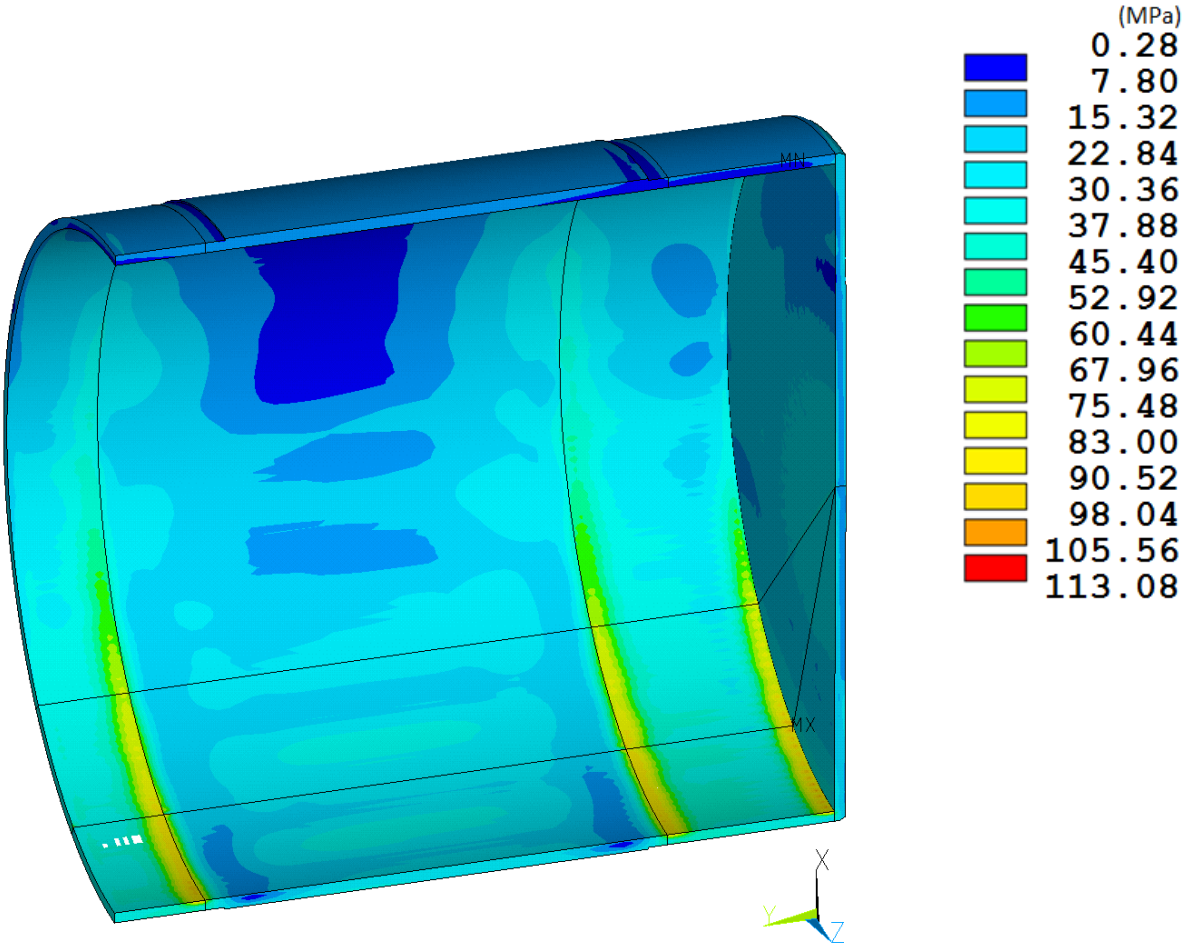

Figure 2.6.7.3-3. RT-100 Outer Shell NCT Side Drop Stress Intensity Results.

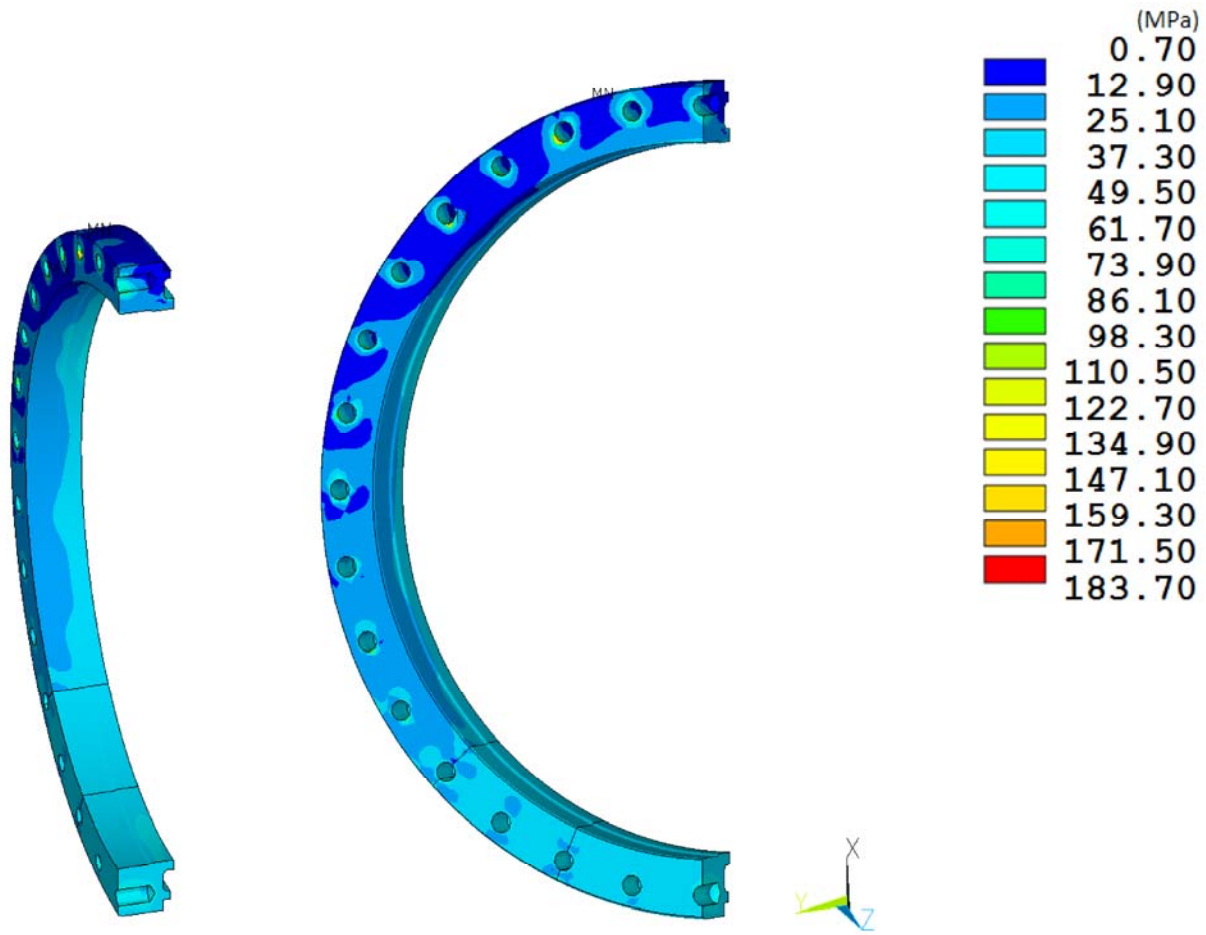

Figure 2.6.7.3-4. RT-100 Flange NCT Side Drop Stress Intensity Results.

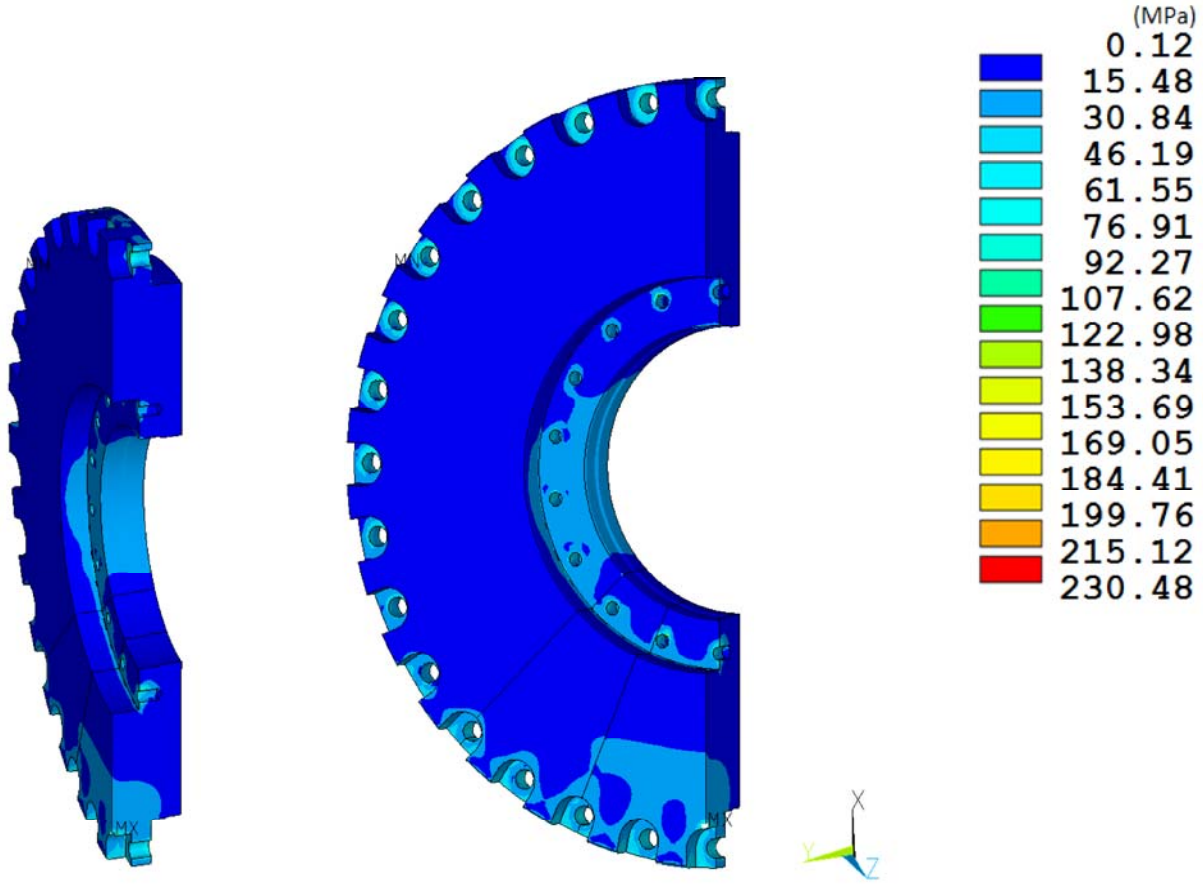

Figure 2.6.7.3-5. RT-100 Outer Lid NCT Side Drop Stress Intensity Results.

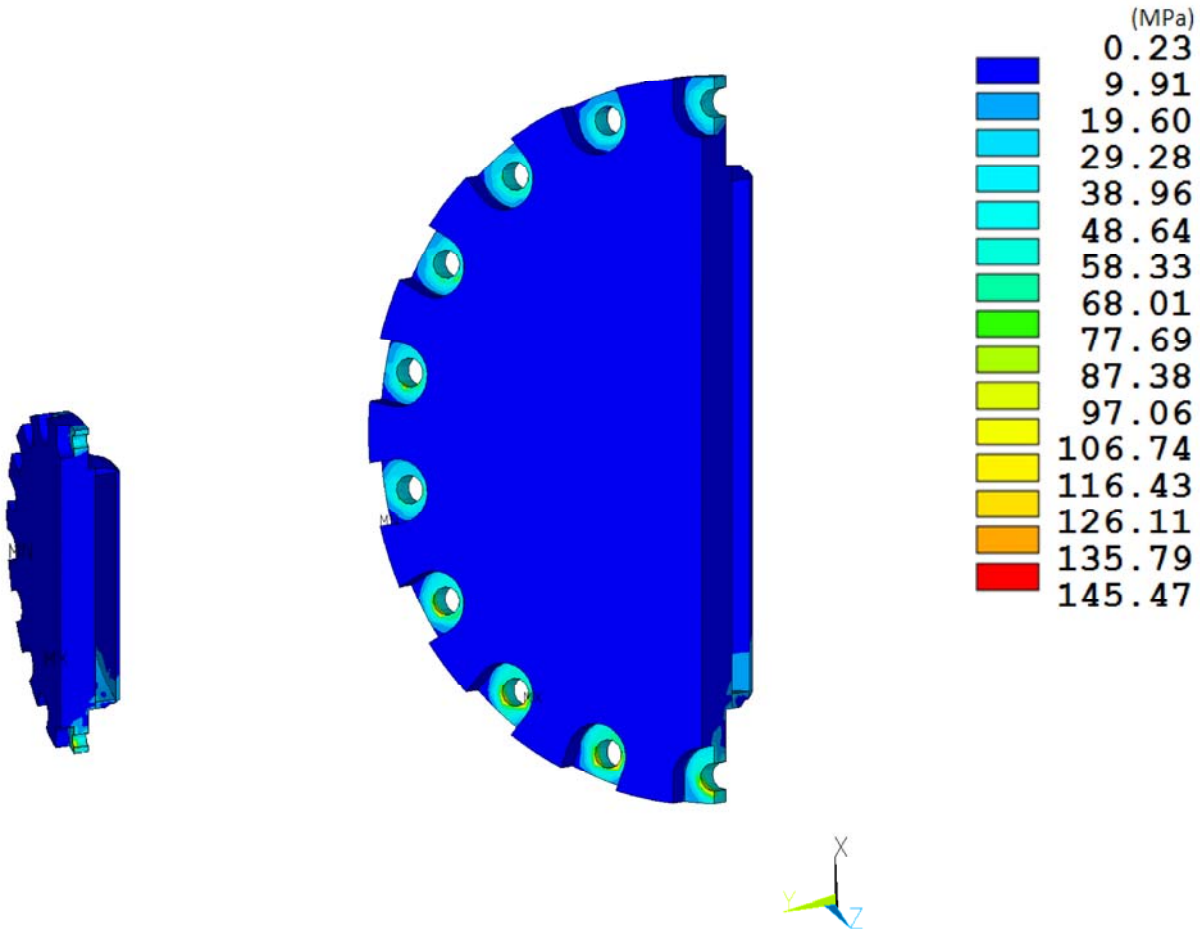

Figure 2.6.7.3-6. RT-100 Inner Lid NCT Side Drop Stress Intensity Results.

2.6.7.4 End Drop

In accordance with the requirements of 10 CFR 71.71 [Ref. 2], the Universal Transport Cask is structurally evaluated for the normal condition of transport 0.3 m end-drop. In this event, the cask (equipped with an impact limiter over each end) falls a distance of 0.3 m onto a flat, unyielding, horizontal surface. The cask strikes the surface in a vertical position; consequently, an end impact on the bottom end or top end of the cask occurs.

Stress results for the 1-ft top-and bottom-end drop combined loading conditions discussed previously are documented in Table 2.6.7-6. The table documents the primary membrane (Pm), primary membrane plus primary bending (P_m+P_b), primary membrane plus primary bending plus secondary peak stress (P_m+P_b+Q) in accordance with the criteria presented in Regulatory Guide 7.6.

As shown in the Table 2.6.7-6, the margins of safety for the primary stress intensity category are positive for all of the 0.3 m top-end drop conditions. The most critically stressed component in the system is the cask flange region where due to the bending of the flange due to the inertial load imposed by the cask lids. The minimum margin of safety is found to be +2.4 for primary membrane plus bending stress intensity. The locations of the critical sections correspond to the maximum stress location show in Figures 2.6.7.4-1 through 2.6.7.4-6. The minimum margin of safety for primary plus secondary stress intensity is +0.2.

Table 2.6.7.4-1 NCT End Drop Stress Summary

	Stress State	Location	S1	S2	S3	SINT	SI (304)	Allowabl	MS
			MPa	MPa	MPa	MPa	MPa	MPa	
INNER SHELL	P_m		2.7	1.2	-7.8	10.5	137.9	137.9	12.1
	$P_m + P_b$	*Inside*	2.7	2.0	-12.2	14.9	137.9	206.8	12.9
		Center	2.7	1.2	-7.8	10.5	137.9	206.8	18.7
		Outside	2.9	0.2	-3.6	6.6	137.9	206.8	30.5
	Hot $P_m + P_b + Q$	*Inside*	2.7	2.0	-12.2	14.9	137.9	413.7	26.8
		Center	2.7	1.2	-7.8	10.5	137.9	413.7	38.3
		Outside	2.9	0.2	-3.6	6.6	137.9	413.7	61.9
	Cold $P_m + P_b + Q$	*Inside*	2.7	2.0	-12.2	14.9	137.9	413.7	26.8
		Center	2.7	1.2	-7.8	10.5	137.9	413.7	38.3
		Outside	2.9	0.2	-3.6	6.6	137.9	413.7	61.9
OUTER SHELL	P_m		6.5	-0.9	-3.4	9.9	137.9	137.9	12.9
	$P_m + P_b$	*Inside*	7.5	1.0	-2.7	10.2	137.9	206.8	19.3
		Center	6.5	-0.9	-3.4	9.9	137.9	206.8	19.9
		Outside	6.9	0.7	-9.0	15.9	137.9	206.8	12.0
	Hot $P_m + P_b + Q$	*Inside*	113.3	39.9	-63.2	176.5	137.9	413.7	1.3
		Center	22.5	-10.9	-16.7	39.2	137.9	413.7	9.5
		Outside	25.4	0.5	-33.5	58.9	137.9	413.7	6.0
	Cold $P_m + P_b + Q$	*Inside*	10.7	0.5	-4.5	15.3	137.9	413.7	26.1
		Center	18.7	5.7	-4.7	23.5	137.9	413.7	16.6
		Outside	10.4	2.4	-9.5	19.9	137.9	413.7	19.8
FLANGE	P_m		5.9	1.5	-12.3	18.1	137.9	137.9	6.6
	$P_m + P_b$	*Inside*	0.1	-3.3	-19.5	19.6	137.9	206.8	9.5
		Center	5.9	1.5	-12.3	18.1	137.9	206.8	10.4
		Outside	20.1	6.3	-13.6	33.7	137.9	206.8	5.1
	Hot $P_m + P_b + Q$	*Inside*	48.0	24.1	-219.4	267.4	137.9	413.7	0.5
		Center	12.9	-5.7	-23.8	36.6	137.9	413.7	10.3
		Outside	74.0	34.2	-53.9	127.9	137.9	413.7	2.2
	Cold $P_m + P_b + Q$	*Inside*	32.8	-42.6	-105.1	137.9	137.9	413.7	2.0
		Center	14.2	2.1	-24.1	38.3	137.9	413.7	9.8
		Outside	92.7	71.4	-36.7	129.4	137.9	413.7	2.2
OUTER LID	P_m		-0.9	-4.0	-14.6	13.7	137.9	137.9	9.1
	$P_m + P_b$	*Inside*	-7.7	-17.0	-52.6	45.0	137.9	206.8	3.6
		Center	-0.9	-4.0	-14.6	13.7	137.9	206.8	14.1
		Outside	24.2	9.0	5.1	19.0	137.9	206.8	9.9
	Hot $P_m + P_b + Q$	*Inside*	280.5	36.7	-55.4	336.0	137.9	413.7	0.2
		Center	35.3	20.9	-4.7	40.0	137.9	413.7	9.3
		Outside	41.6	16.7	-56.7	98.3	137.9	413.7	3.2
	Cold $P_m + P_b + Q$	*Inside*	-35.0	-71.0	-163.6	128.5	137.9	413.7	2.2
		Center	14.0	4.5	-14.8	28.8	137.9	413.7	13.4
		Outside	21.6	-0.3	-22.2	43.8	137.9	413.7	8.4
INNER LID	P_m		5.7	-2.3	-35.4	41.1	137.9	137.9	2.4
	$P_m + P_b$	*Inside*	-6.5	-10.3	-67.7	61.3	137.9	206.8	2.4
		Center	5.7	-2.3	-35.4	41.1	137.9	206.8	4.0
		Outside	20.8	6.0	-6.5	27.3	137.9	206.8	6.6
	Hot $P_m + P_b + Q$	*Inside*	-14.6	-27.5	-112.1	97.5	137.9	413.7	3.2
		Center	28.9	11.0	-26.3	55.2	137.9	413.7	6.5
		Outside	18.9	-8.7	-36.5	55.3	137.9	413.7	6.5
	Cold $P_m + P_b + Q$	*Inside*	-18.9	-23.7	-93.0	74.1	137.9	413.7	4.6
		Center	9.7	-1.3	-39.2	49.0	137.9	413.7	7.4
		Outside	23.4	3.1	-13.5	36.8	137.9	413.7	10.2

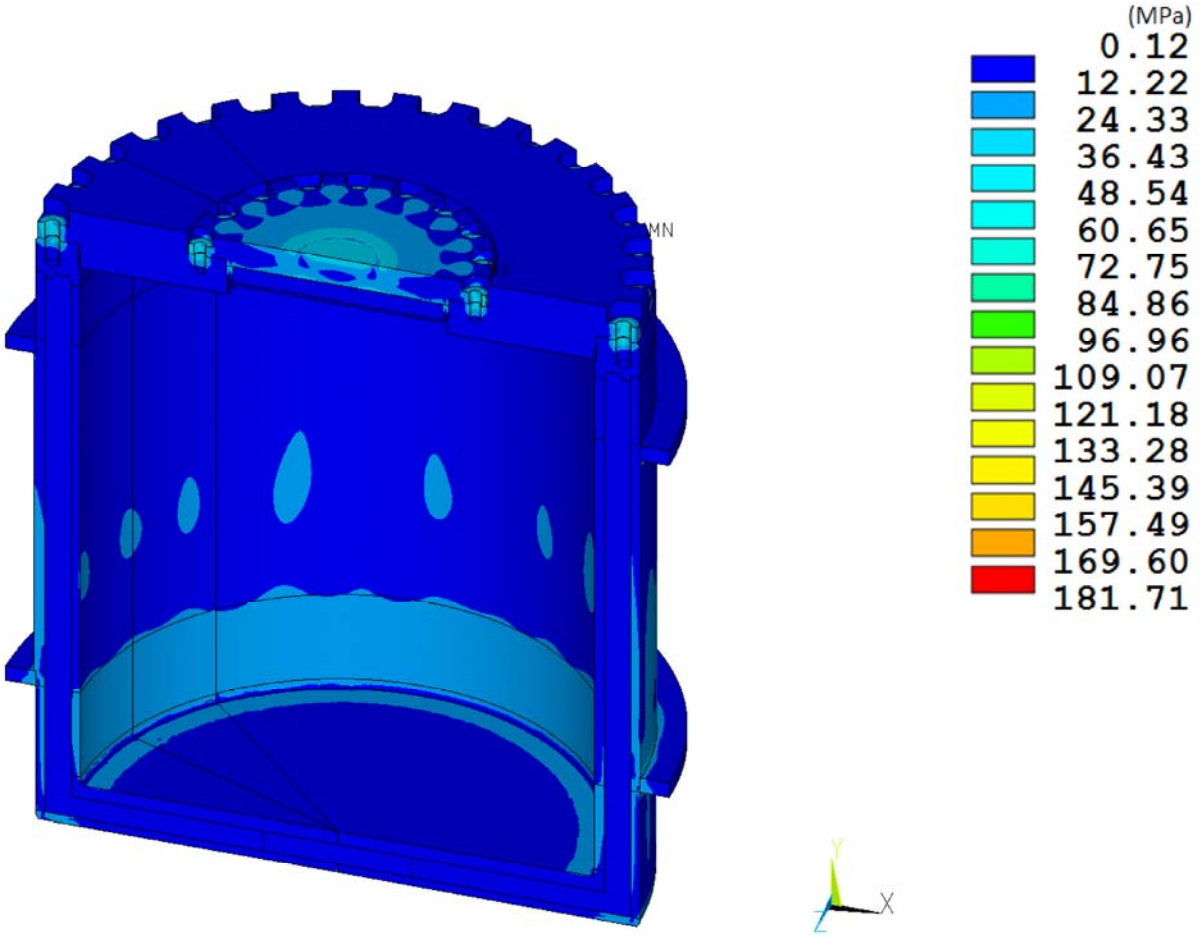

Figure 2.6.7.4-1. RT-100 NCT Bottom Drop Stress Intensity Results.

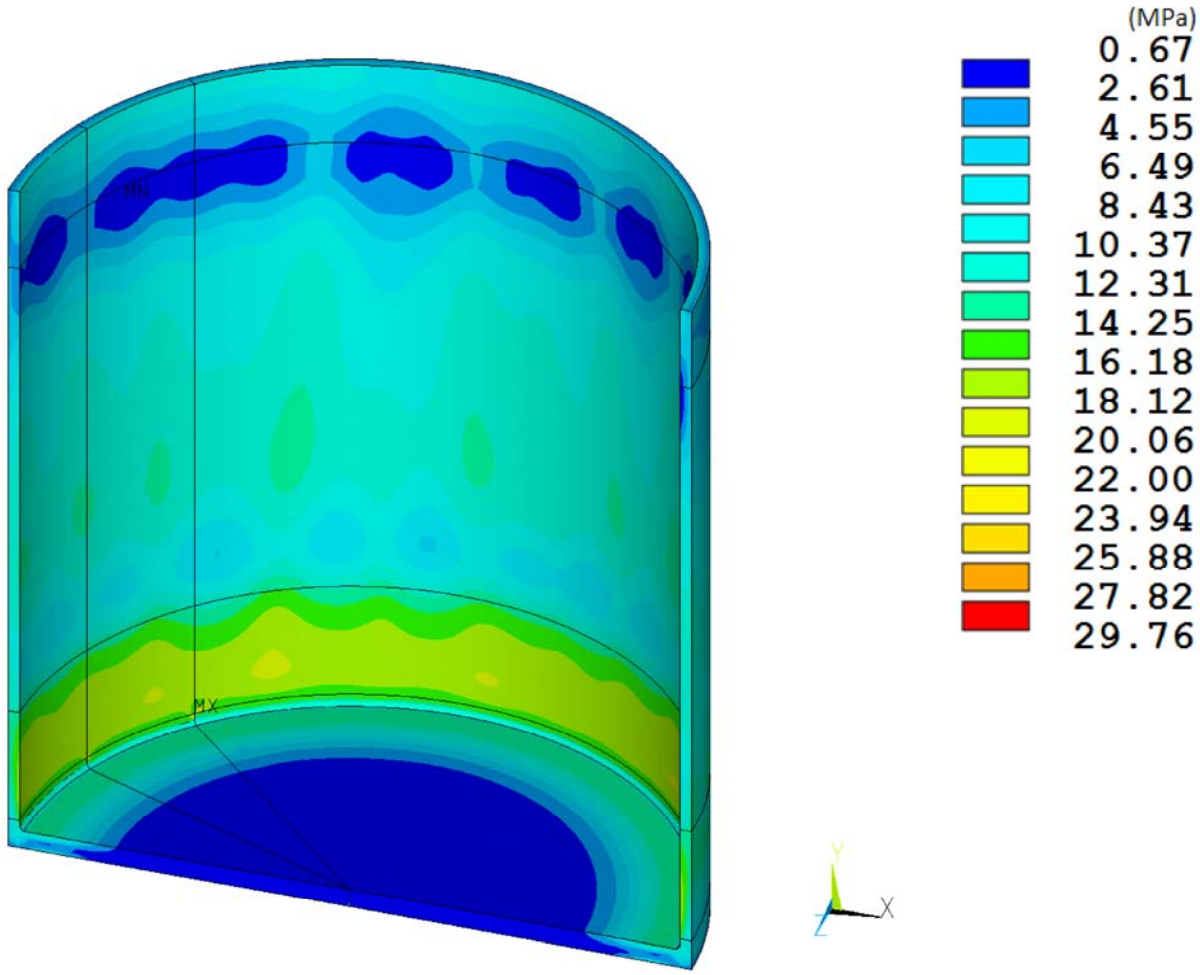

Figure 2.6.7.4-2. RT-100 Inner Shell NCT End Drop Stress Intensity Results.

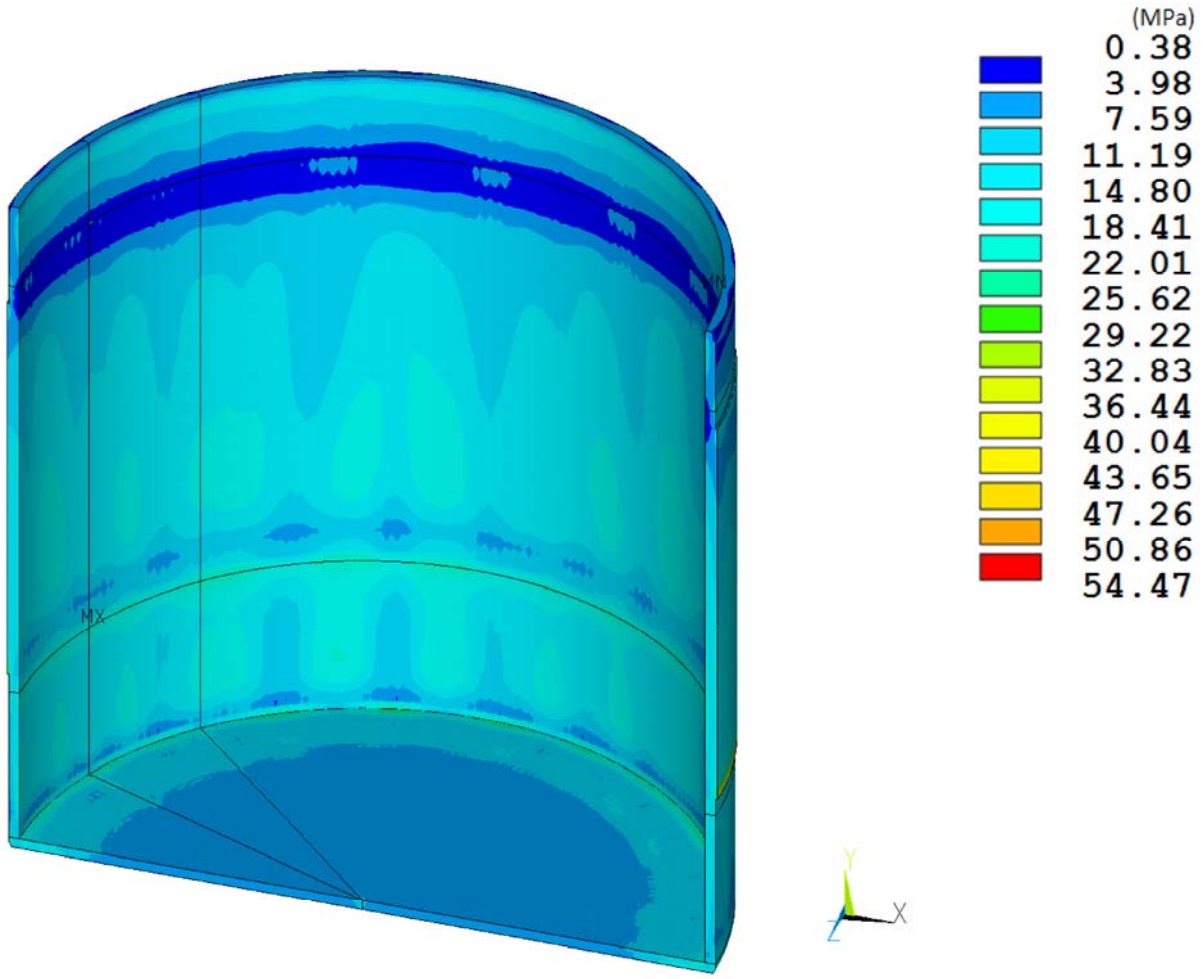

Figure 2.6.7.4-3. RT-100 Outer Shell NCT End Drop Stress Intensity Results.

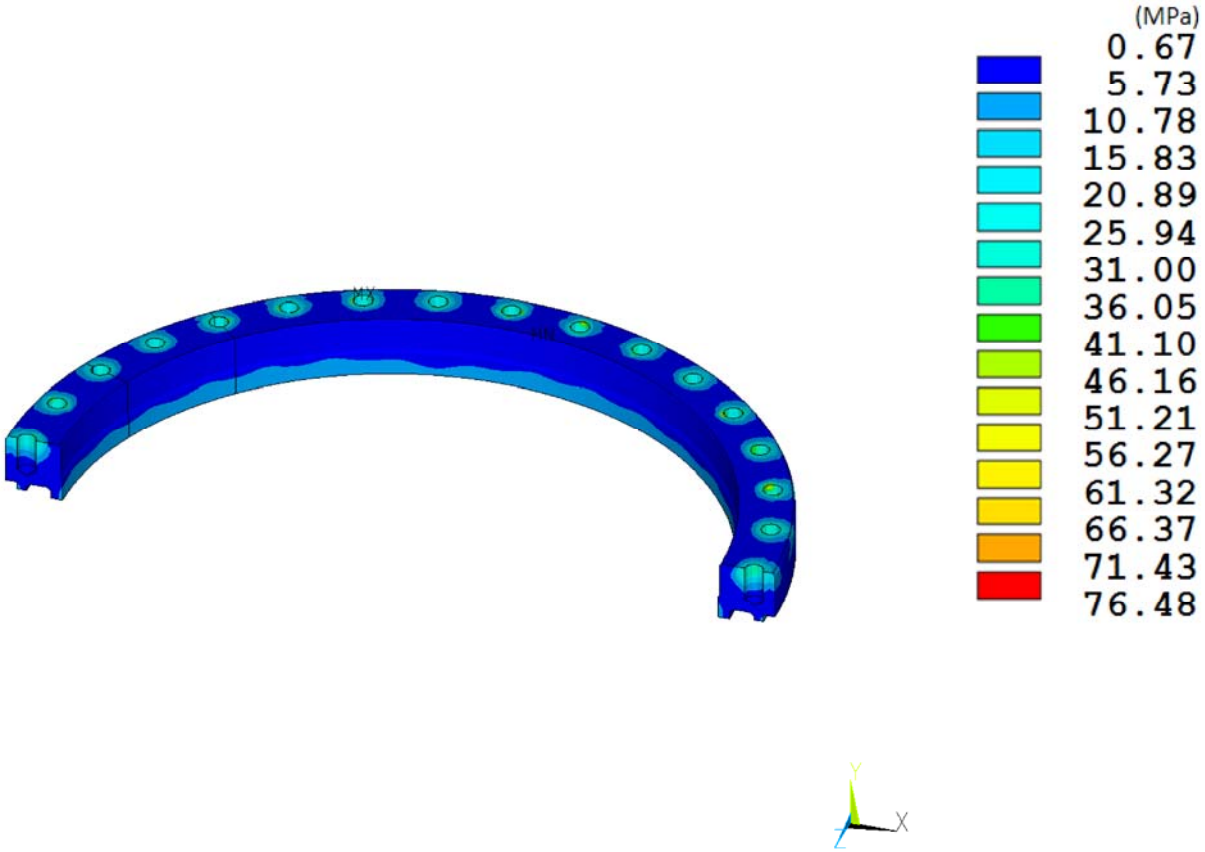

Figure 2.6.7.4-4. RT-100 Flange NCT End Drop Stress Intensity Results.

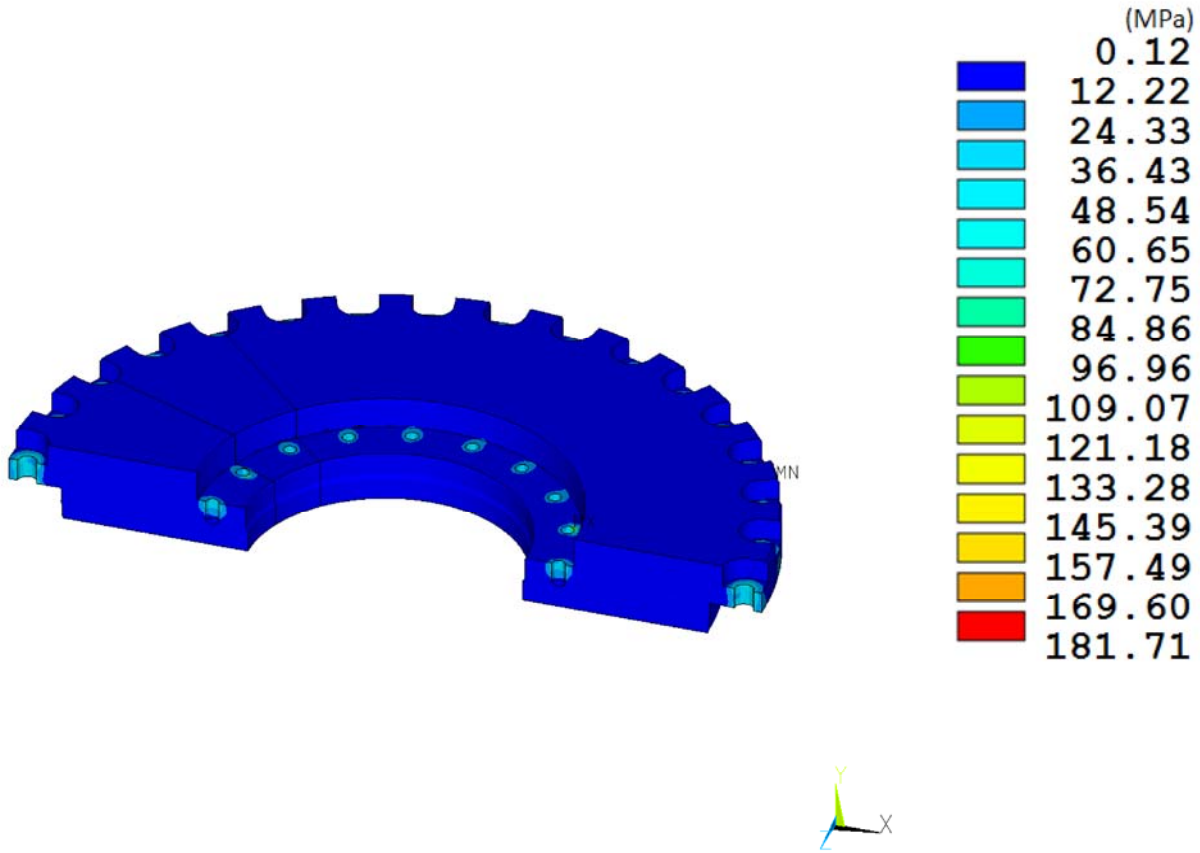

Figure 2.6.7.4-5. RT-100 Outer Lid NCT End Drop Stress Intensity Results.

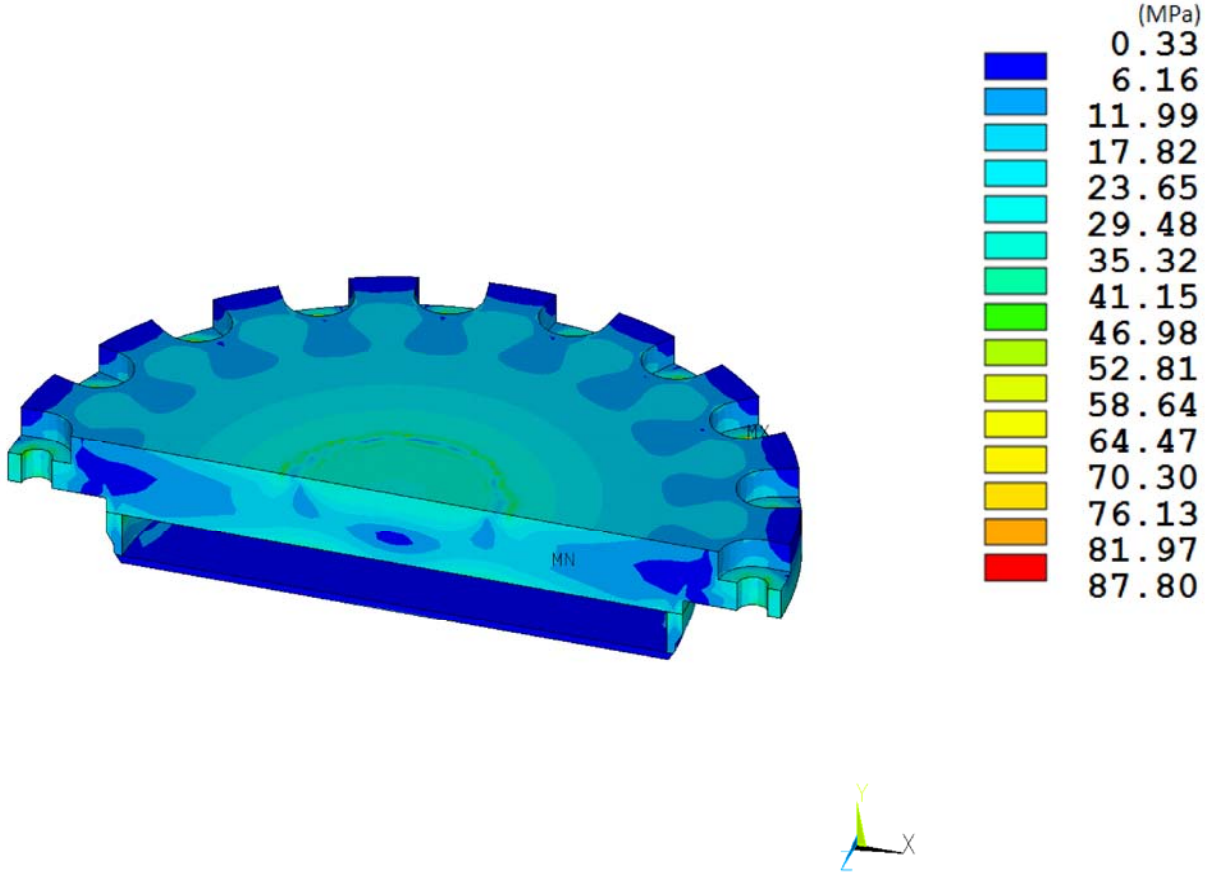

Figure 2.6.7.4-6. RT-100 Inner Lid NCT End Drop Stress Intensity Results.

2.6.8 Corner Drop

The RT-100 Cask is composed of materials other than fiberboard or wood, and the weight of the package exceeds 100 kg. Therefore, according to 10 CFR 71.71(c)(8) [Ref. 2], this test is not applicable to the RT-100 Cask.

2.6.9 Compression

According to 10 CFR 71.71(c)(9) [Ref. 2], this test is not applicable to the RT-100 Cask because the package weight is greater than 5,000 kg.

2.6.10 Penetration

According to 10 CFR 71.71(c)(10) [Ref. 2], a penetration test involving a 13-lb (6-kg) penetration cylinder dropped from a height of 1 m is required for evaluation of packages during normal conditions of transport. However, Regulatory Guide 7.8 states that "the penetration test of 10 CFR 71.71 [Ref. 2] is not considered by the NRC staff to have structural significance for large shipping casks (except for unprotected valves and rupture disks) and will not be considered as a general requirement." Because the RT-100 Cask has no unprotected valves or rupture disks that could be affected by normal conditions of transport, a penetration test is not performed.

2.7 Hypothetical Accident Conditions

The RT-100 Cask meets the standards specified in 10 CFR 71.51 [Ref. 2] when subjected to the conditions and tests specified in 10 CFR 71.73 [Ref. 2] for hypothetical accidents. In accordance with 10 CFR 71.73 [Ref. 2], the cask is structurally evaluated for hypothetical accident scenarios of free drop, puncture, fire, crush, and water immersion. In the free-drop and puncture analyses, the cask impact orientation evaluated is that which inflicts the maximum damage to the cask. The most unfavorable ambient temperature condition during operation in the range from -40°C to 38°C is assumed. The following sections contain the evaluation of the cask for structural integrity under the hypothetical accident conditions.

2.7.1 Free Drop

The RT-100 Cask is required by 10 CFR 71.73(c)(1) [Ref. 2] to demonstrate structural adequacy for a free drop through a distance of 9 meters onto a flat, unyielding, horizontal surface. The cask payload is oriented to strike the surface to inflict the maximum damage. In determining the orientation that produces the maximum damage, the cask is evaluated for impact orientations in which the cask strikes the impact surface on its bottom end and side. Evaluation of each drop orientation is accomplished by using finite element analysis techniques. A complete description of the 3-D model used to analyze the cask body is presented in Section 2.6.7.2. The results of each drop orientation listed above are presented in this section. The impact limiters are evaluated in Appendix 2.13 for all loading conditions and orientations.

The mass of the contents is considered when evaluating impact and environmental temperature for the drop is between -40°C and 38°C. For the accident condition, stresses arising from

thermal expansion are not considered. However, for determination of properties, the temperatures are considered. The mean normal operating pressure of 241 (kPa) 35 psig is applied in the finite element models to produce the bounding critical stress condition in conjunction with the other loads previously discussed. A separate analysis evaluates the stresses associated with the accident pressure of 588 kPa (85.3 psig) that results from the regulatory fire event. Closure lid bolt preload is considered (Appendix 2.14 and Section 2.6.7.2.3) and fabrication stresses are discussed (Appendix 2.15). The following method and assumptions are adopted in all the hypothetical accident drop analyses:

The following sections contain the evaluation of the cask for impact orientations in which the cask strikes the impact surface on its bottom end and side. The impact conditions in accordance with Regulatory Guide 7.8 [Ref. 3] and the categories of load to be considered for the hypothetical accident conditions are similar to those for the 0.3 meter free drops, under normal conditions of transport, discussed in Section 2.6.7. Therefore, the discussions in the following sections refer to Section 2.6.7 wherever applicable.

Three categories of load—closure lid bolt preload, internal pressure, and inertial body loads—are considered on the cask. The inertia loads imposed upon the cask by the impact limiter result from the mass of the entire assembly being acted upon by a design deceleration value of 60 g for the 30-ft end-drop case. The closure lid bolt preload, internal pressure load, and contents loads considered for the 30-ft end-drop condition are similar to those considered for 1-ft end-drop condition in Section 2.6.7.2, with the exception that thermal stresses are not considered for accident conditions. The material properties of the components are considered to be temperature dependent.

The allowable stress limits criteria are discussed in Section 2.6.7.1. These criteria are used to determine the allowable stresses for each cask component, conservatively using the maximum operating temperature within a given component to determine the allowable stress throughout that component. For cask body analyses presented in this section, the maximum heat conditions (thermal condition 1) is 38°C ambient temperature, maximum decay heat load, and maximum solar insolation.

During fabrication of the RT-100 Cask, thermal stresses can be introduced in the inner and outer shells as a result of pouring molten lead between them. However, any residual stresses in the inner shell (containment boundary) and the outer shell induced by shrinkage of the lead shielding after the lead pouring operation are relieved early in the life of the cask because of the low creep strength of lead. Therefore, the effects of stresses resulting from the processes used in fabrication of the cask are considered to be negligible. Further discussion of fabrication stresses in provided in Appendix 2.15.

2.7.1.1 End Drop

In accordance with the requirements of 10 CFR 71.73(c)(1) [Ref. 2], the RT-100 Cask is structurally evaluated for the 30-foot end-drop condition. In this hypothetical accident, the cask, with its payload, spacer (if appropriate), and the impact limiters, falls 30 feet onto a flat, unyielding, horizontal surface. The cask strikes the surface in a vertical position; consequently, an end impact on the bottom or top end of the cask occurs. The types of loading involved in an end-drop accident are closure lid bolt preload, internal pressure, and inertial body load. Section 2.6.7.2 describes the application of each loading condition.

2.7.1.1.1 End Drop Evaluation

In accordance with the requirements of 10 CFR 71.73(c)(1) [Ref. 2], the RT-100 Cask is structurally evaluated for the 30-foot end-drop condition. In this hypothetical accident, the cask, with its payload, and the impact limiters, falls 30 feet onto a flat, unyielding, horizontal surface. The cask strikes the surface in a vertical upright position. For the RT-100 cask, the bottom end drop is bounding. In the bottom down position, the prying load on the closure bolts is maximized.

Stress results for the 9-meter bottom end drop combined are documented in Table 2.7.1-1. The table documents the primary membrane (P_m), primary membrane plus primary bending (P_m+P_b) stresses in accordance with the criteria presented in Regulatory Guide 7.6 [Ref. 4].

As shown in Table 2.7.1-1, the margins of safety when compared to the stress intensity for each category are positive. The most critically stressed component in the system is the flange, which is due to bending as a result of the inertial loads on the cask lids. The minimum margin of safety is found to be +2.9 for primary membrane plus bending stress intensity. The locations of the critical sections correspond to the maximum stress location show in Figures 2.7.1-1 through 2.7.1-6.

2.7.1.1.2 Lead Slump Evaluation

The RT-100 Cask experiences the largest acceleration during the end drop orientation. Because of the cask geometry, maximum lead slump occurs during the previously analyzed bottom end drop in Section 2.7.1.1. From the finite element model analysis the relative displacement at the lead-steel interface is obtained. Figure 2.7.1-7 shows the exaggerated displacement plot under this drop condition. The total displacement of the lead column is 1.62 mm. However, elastic recovery of the lead and steel has been conservatively neglected.

Table 2.7.1-1 HAC End Drop Stress Summary

Stress State	Location	S1	S2	S3	SINT	Stress Intensity (304)	Allowable Stress	Margin of Safety
INNER SHELL		MPa	MPa	MPa	MPa	MPa	MPa	
Pm		7.5	5.7	-30.9	38.4	137.9	330.9	7.6
Pm + Pb	*Inside*	12.8	6.5	-51.3	64.1	137.9	496.4	6.7
	Center	7.5	5.7	-30.9	38.4	137.9	496.4	11.9
	Outside	8.2	-0.5	-11.2	19.4	137.9	496.4	24.6
OUTER SHELL		MPa	MPa	MPa	MPa	MPa	MPa	
Pm		10.7	0.1	-22.0	32.8	137.9	330.9	9.1
Pm + Pb	*Inside*	7.2	-0.2	-26.3	33.5	137.9	496.4	13.8
	Center	10.7	0.1	-22.0	32.8	137.9	496.4	14.2
	Outside	14.2	0.5	-17.8	32.0	137.9	496.4	14.5
FLANGE		MPa	MPa	MPa	MPa	MPa	MPa	
Pm		-5.2	-11.9	-19.5	14.3	137.9	330.9	22.2
Pm + Pb	*Inside*	-5.9	-13.2	-20.2	14.2	137.9	496.4	33.8
	Center	-5.2	-11.9	-19.5	14.3	137.9	496.4	33.8
	Outside	4.7	-14.9	-23.9	28.6	137.9	496.4	16.3
OUTER LID		MPa	MPa	MPa	MPa	MPa	MPa	
Pm		10.1	-2.3	-30.1	40.3	137.9	330.9	7.2
Pm + Pb	*Inside*	-29.7	-48.1	-104.5	74.8	137.9	496.4	5.6
	Center	10.1	-2.3	-30.1	40.3	137.9	496.4	11.3
	Outside	68.5	45.1	24.1	44.4	137.9	496.4	10.2
INNER LID		MPa	MPa	MPa	MPa	MPa	MPa	
Pm		45.2	31.4	9.3	35.9	137.9	330.9	8.2
Pm + Pb	*Inside*	47.0	-14.6	-143.5	190.4	137.9	496.4	1.6
	Center	45.2	31.4	9.3	35.9	137.9	496.4	12.8
	Outside	172.0	77.5	33.6	138.4	137.9	496.4	2.6

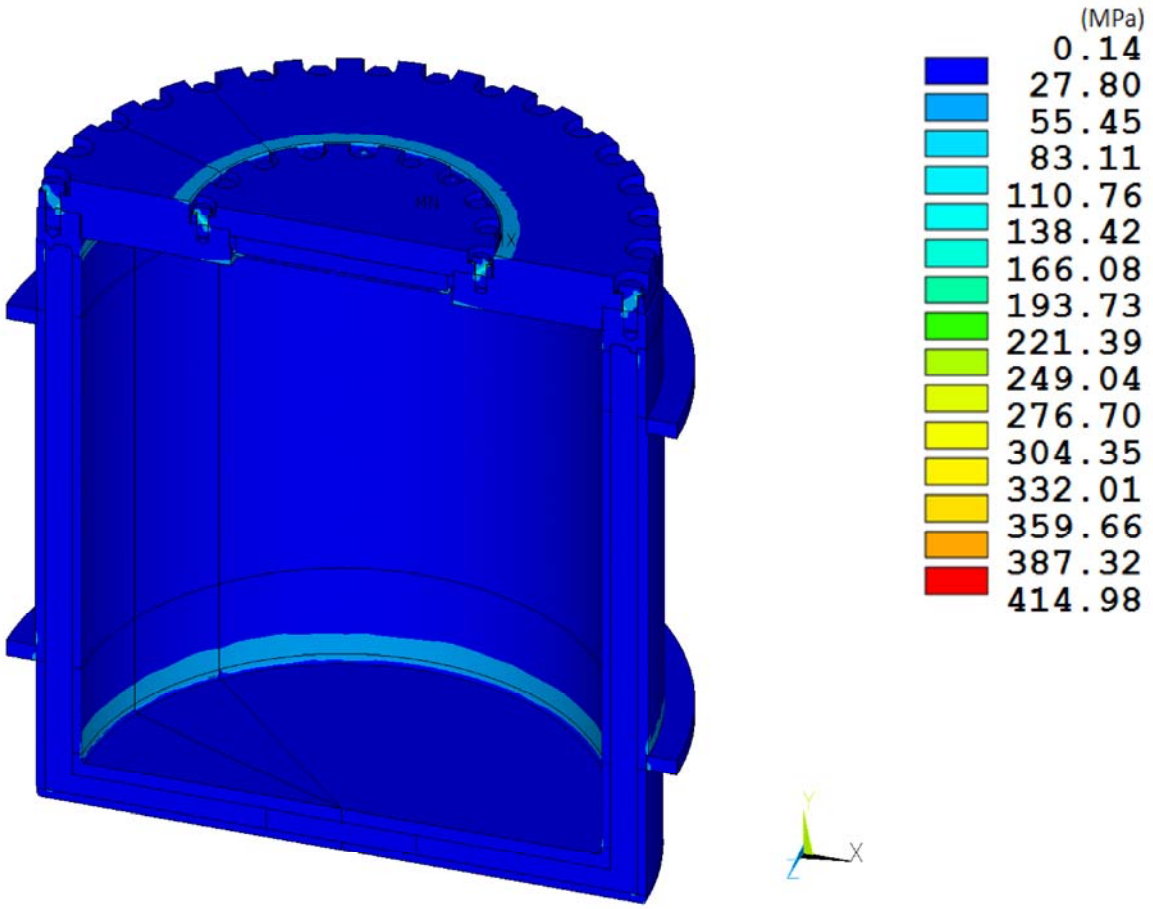

Figure 2.7.1-1 RT-100 HAC End Drop Stress Intensity Results

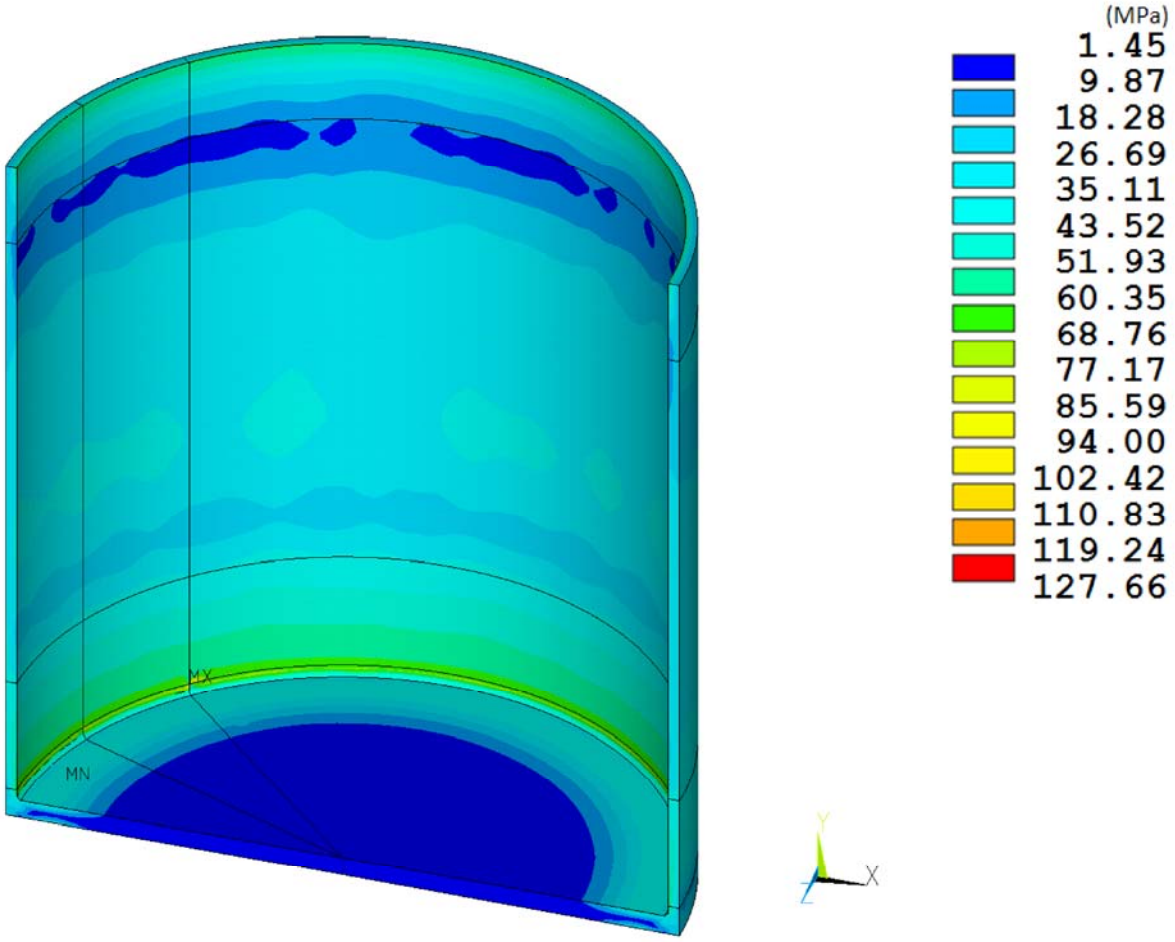

Figure 2.7.1-2 RT-100 Inner Shell HAC End Drop Stress Intensity Results

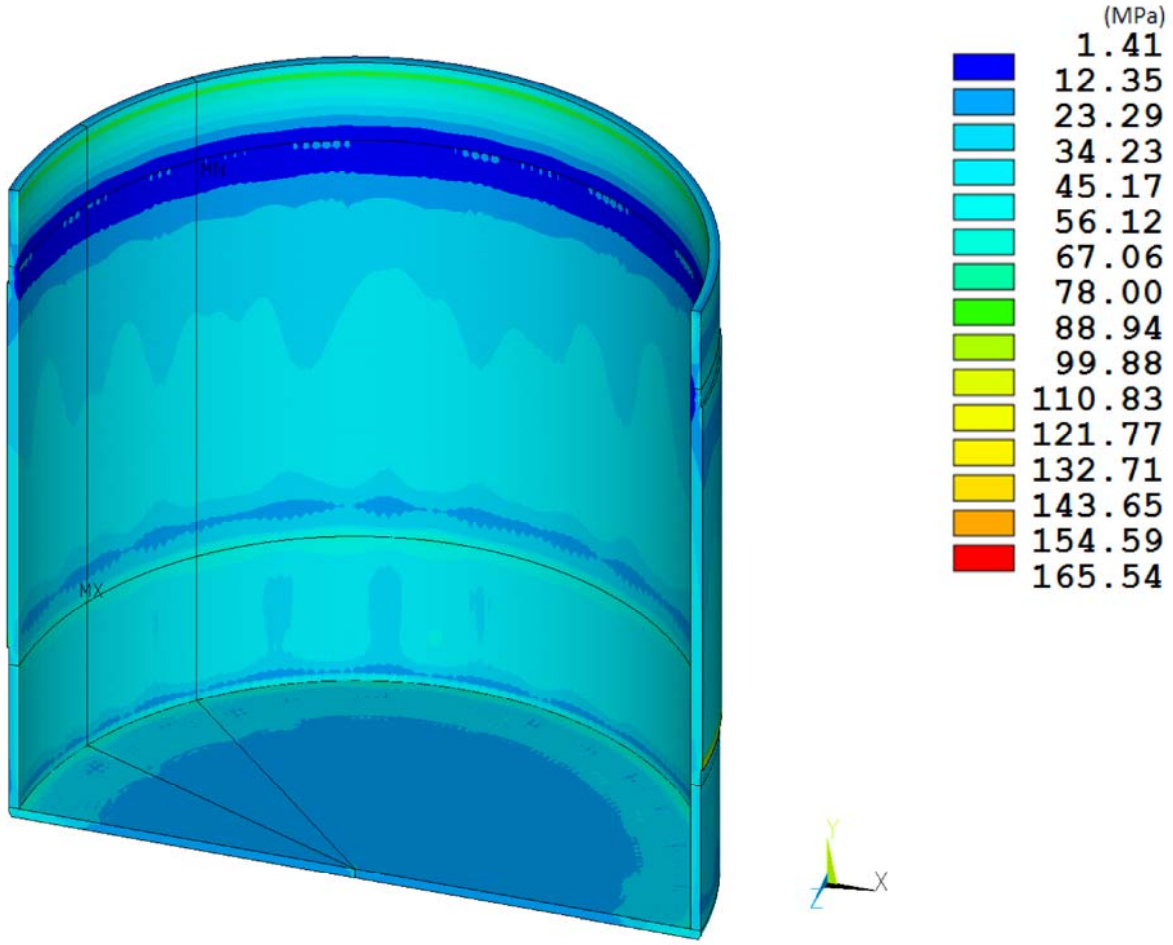

Figure 2.7.1-3 RT-100 Outer Shell HAC End Drop Stress Intensity Results

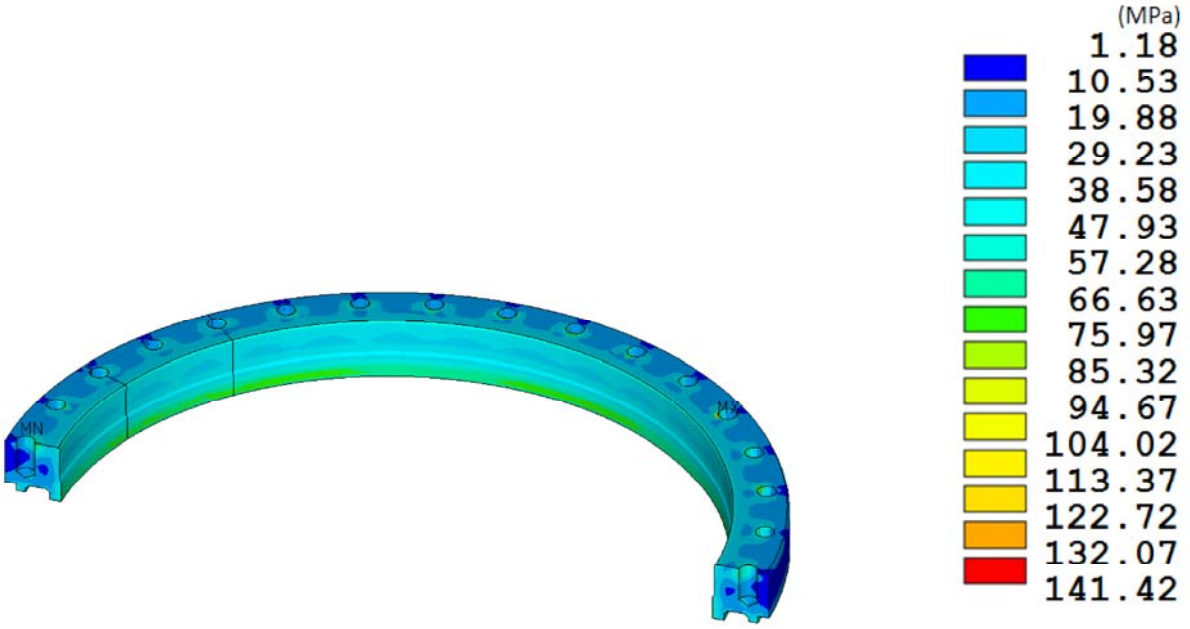

Figure 2.7.1-4 RT-100 Flange HAC End Drop Stress Intensity Results

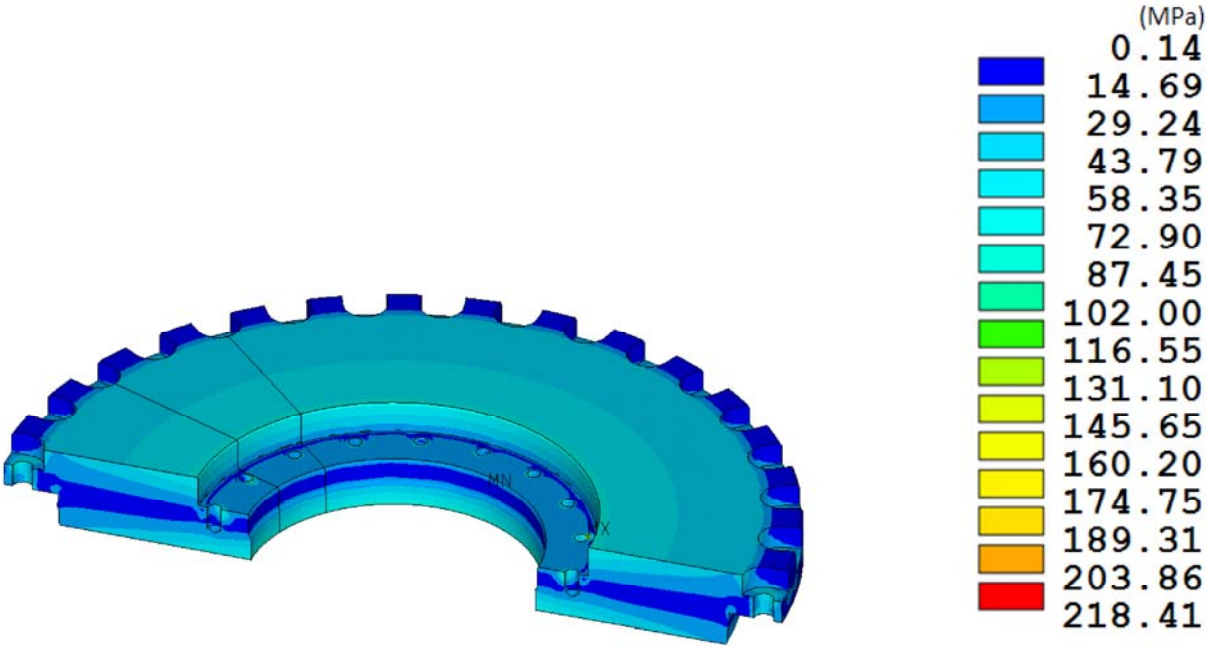

Figure 2.7.1-5 RT-100 Outer Lid HAC End Drop Stress Intensity Results

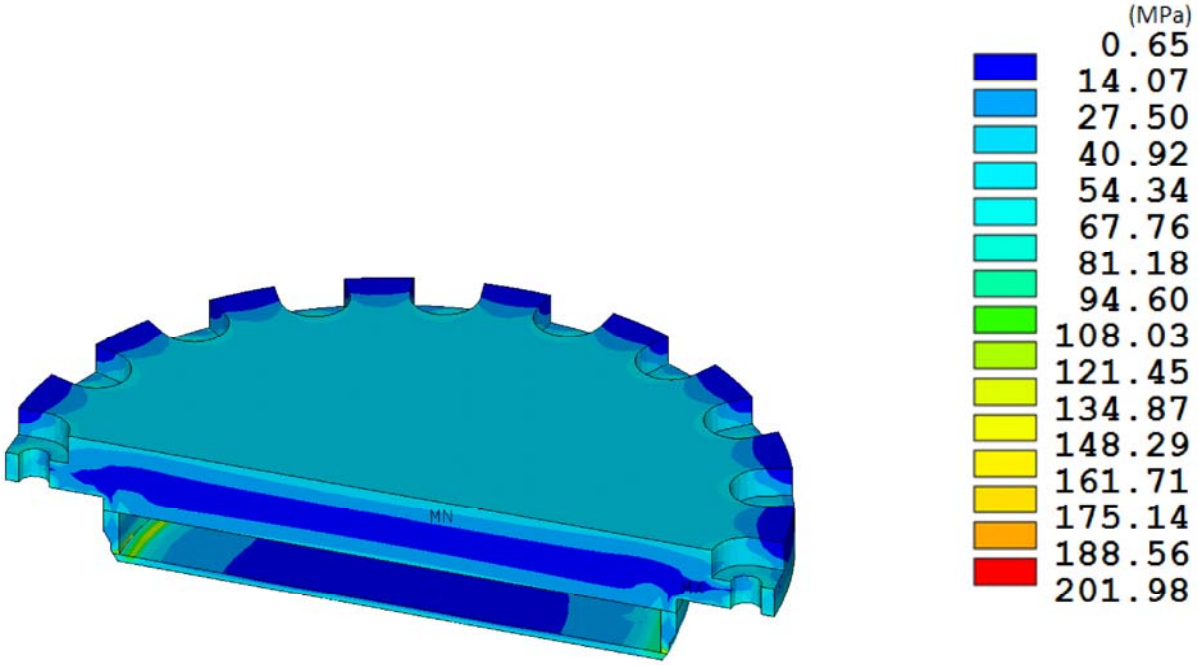

Figure 2.7.1-6 RT-100 Inner Lid HAC End Drop Stress Intensity Results

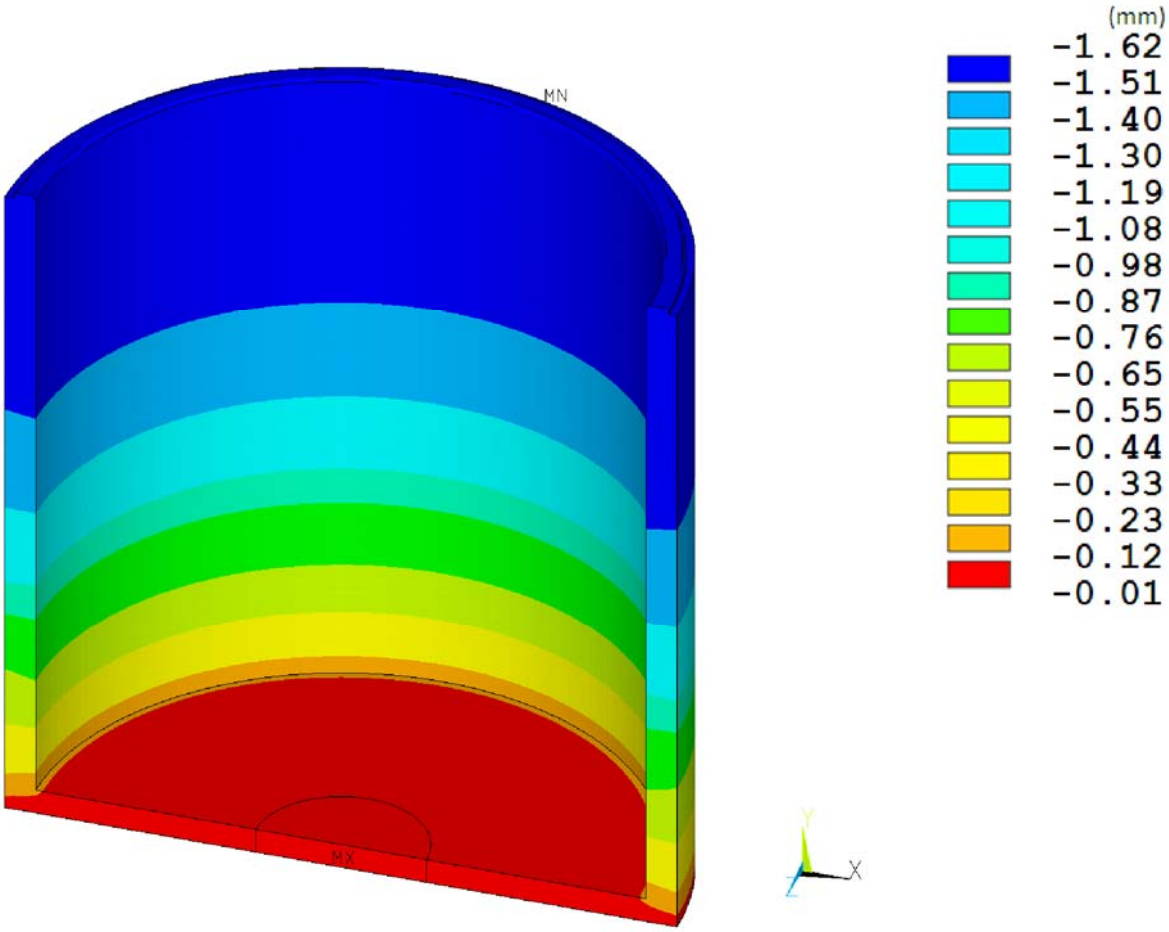

Figure 2.7.1-7 RT-100 Lead Slump

2.7.1.2 Side Drop

In accordance with the requirements of 10 CFR 71.73(c)(1) [Ref. 2], the Universal Transport Cask is structurally evaluated for the hypothetical accident 30-foot side drop condition. In this event, the cask, with its payload, and impact limiters, falls 30 feet onto a flat, unyielding, horizontal surface. The package strikes the surface in a horizontal position; consequently, a side impact occurs. The types of loading involved in a side drop accident are closure lid bolt preload, internal pressure, and inertial body load.

Stress results for the 9-meter side drop combined loading conditions discussed previously are documented in Table 2.7.1-2. The table documents the primary membrane (Pm), primary membrane plus primary bending (P_m+P_b), stresses in accordance with the criteria presented in Regulatory Guide 7.6 [Ref. 4].

As shown in Table 2.7.2-1, the margins of safety when compared to the stress intensity for each category are positive. The most critically stressed component in the system is the cask outer shell, which is due to ovalization of the cask body and the inertial load of the lead shield. The minimum margin of safety is found to be +0.2 for primary membrane plus bending stress intensity. The locations of the critical sections correspond to the maximum stress location show in Figures 2.7.1-8 through 2.7.1-13.

Table 2.7.2-1 HAC Side Drop Stress Summary

Stress State	Location	S1	S2	S3	SINT	Stress Intensity (304)	Allowable Stress	Margin of Safety
INNER SHELL		MPa	MPa	MPa	MPa	MPa	MPa	
Pm		19.1	-13.7	-140.4	159.6	137.9	330.9	1.1
Pm + Pb	*Inside*	20.0	-13.9	-139.7	159.7	137.9	496.4	2.1
	Center	19.1	-13.7	-140.4	159.6	137.9	496.4	2.1
	Outside	18.3	-13.5	-141.3	159.6	137.9	496.4	2.1
OUTER SHELL		MPa	MPa	MPa	MPa	MPa	MPa	
Pm		-14.2	-129.8	-201.4	187.1	137.9	330.9	0.8
Pm + Pb	*Inside*	-66.9	-166.2	-472.2	405.3	137.9	496.4	0.2
	Center	-14.2	-129.8	-201.4	187.1	137.9	496.4	1.7
	Outside	73.5	36.5	-95.5	169.0	137.9	496.4	1.9
FLANGE		MPa	MPa	MPa	MPa	MPa	MPa	
Pm		17.1	-12.5	-145.1	162.2	137.9	330.9	1.0
Pm + Pb	*Inside*	16.9	-12.6	-144.6	161.5	137.9	496.4	2.1
	Center	17.1	-12.5	-145.1	162.2	137.9	496.4	2.1
	Outside	17.3	-12.4	-145.5	162.8	137.9	496.4	2.0
OUTER LID		MPa	MPa	MPa	MPa	MPa	MPa	
Pm		95.6	0.3	-104.9	200.5	137.9	330.9	0.7
Pm + Pb	*Inside*	289.3	35.4	-7.0	296.3	137.9	496.4	0.7
	Center	95.6	0.3	-104.9	200.5	137.9	496.4	1.5
	Outside	-34.4	-94.7	-206.7	172.3	137.9	496.4	1.9
INNER LID		MPa	MPa	MPa	MPa	MPa	MPa	
Pm		-4.3	-14.3	-164.4	160.1	137.9	330.9	1.1
Pm + Pb	*Inside*	-20.9	-70.1	-371.6	350.6	137.9	496.4	0.4
	Center	-4.3	-14.3	-164.4	160.1	137.9	496.4	2.1
	Outside	64.8	33.1	-1.4	66.3	137.9	496.4	6.5

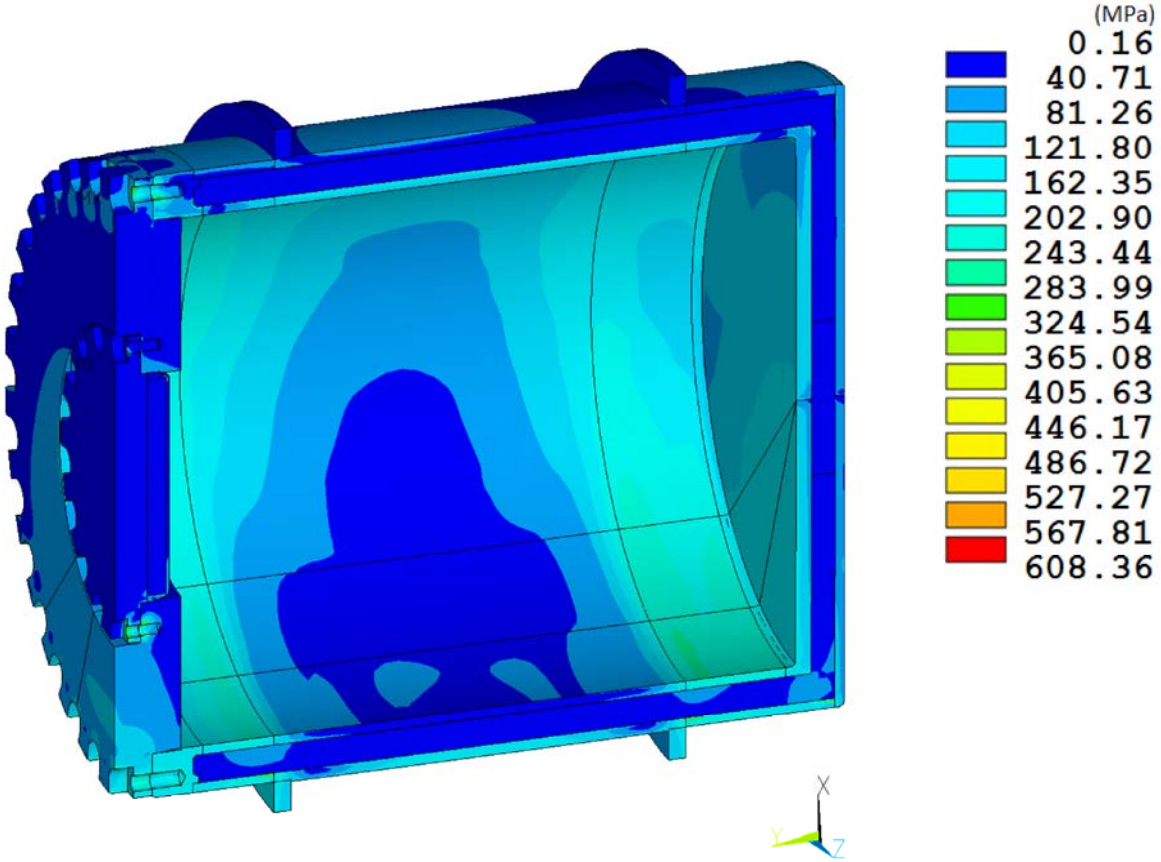

Figure 2.7.1-8 RT-100 HAC Side Drop Stress Intensity Results

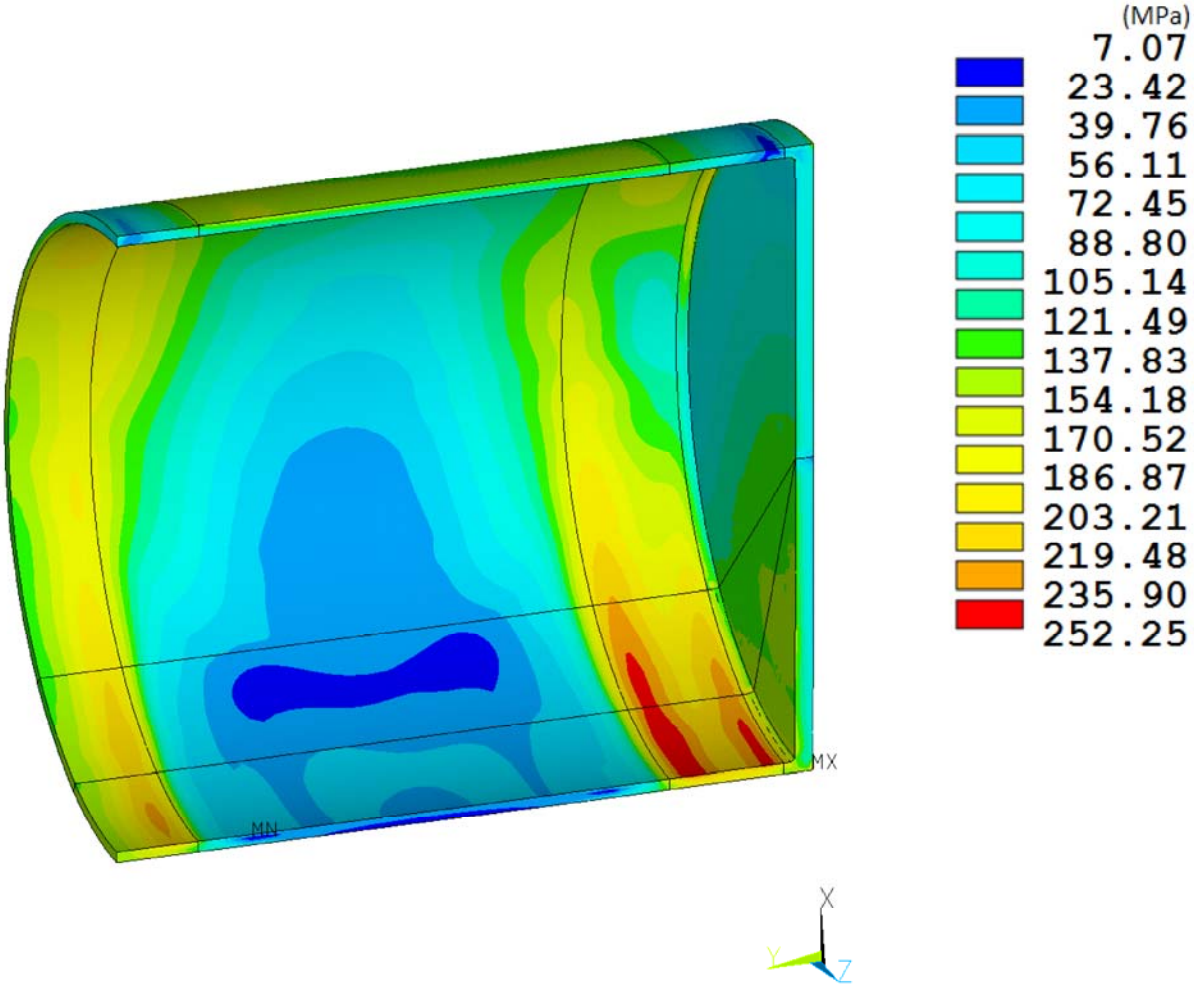

Figure 2.7.1-9 RT-100 Inner Shell HAC Side Drop Stress Intensity Results

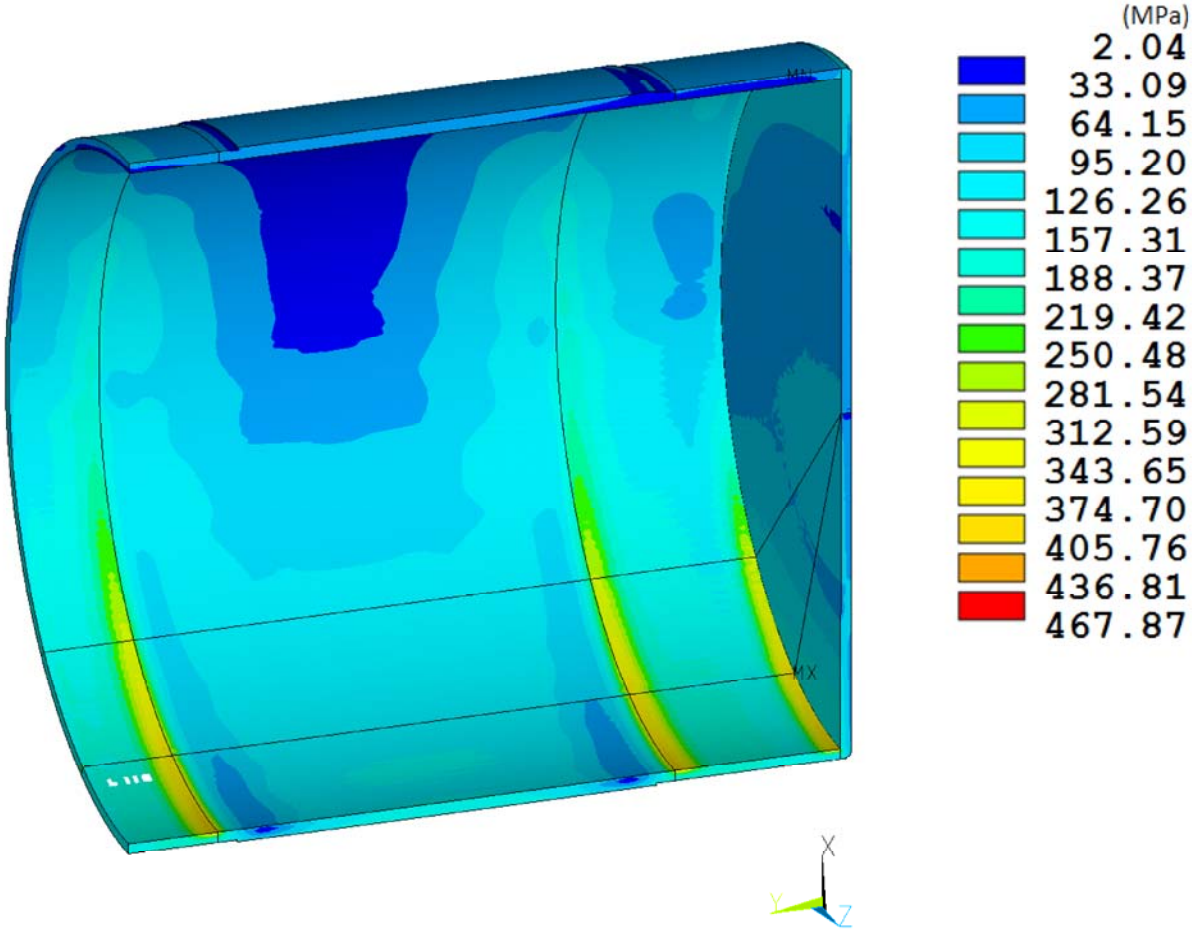

Figure 2.7.1-10 RT-100 Outer Shell HAC Side Drop Stress Intensity Results

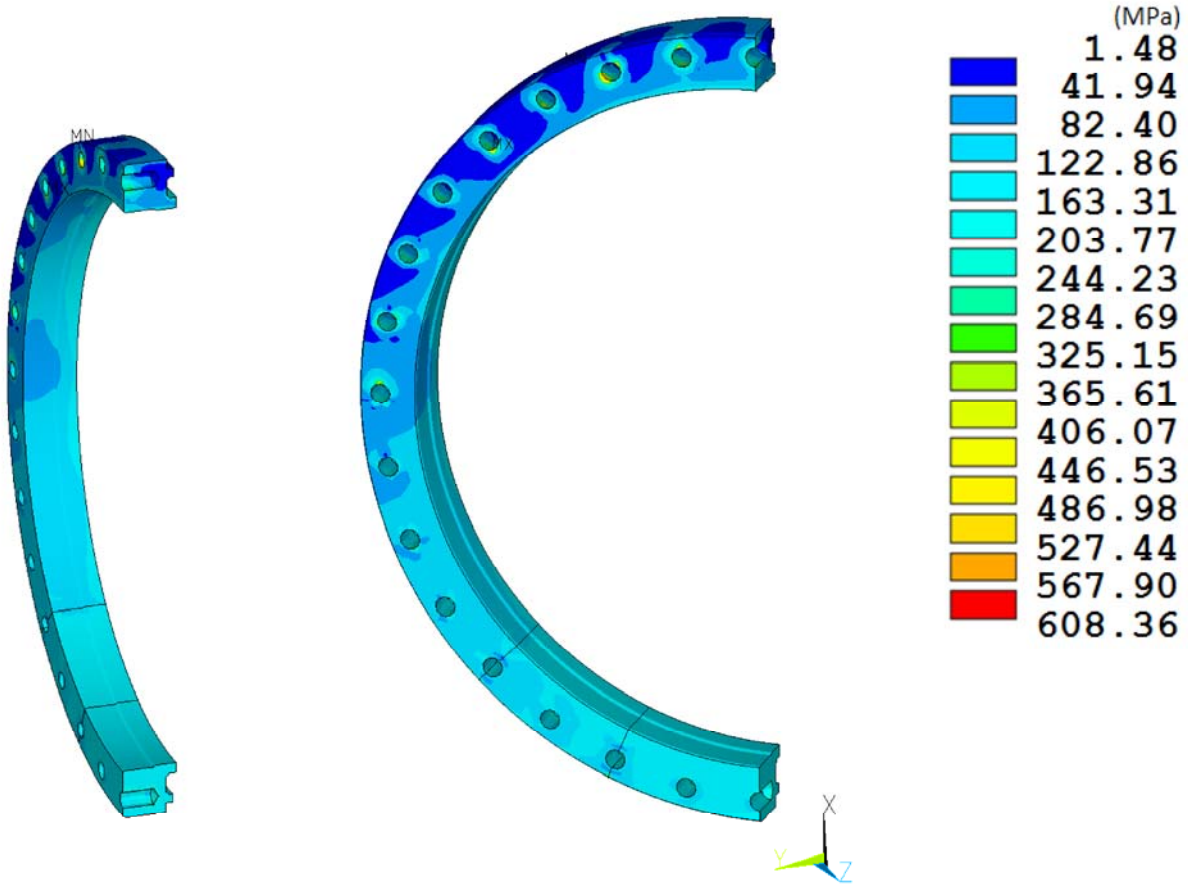

Figure 2.7.1-11 RT-100 Flange HAC Side Drop Stress Intensity Results

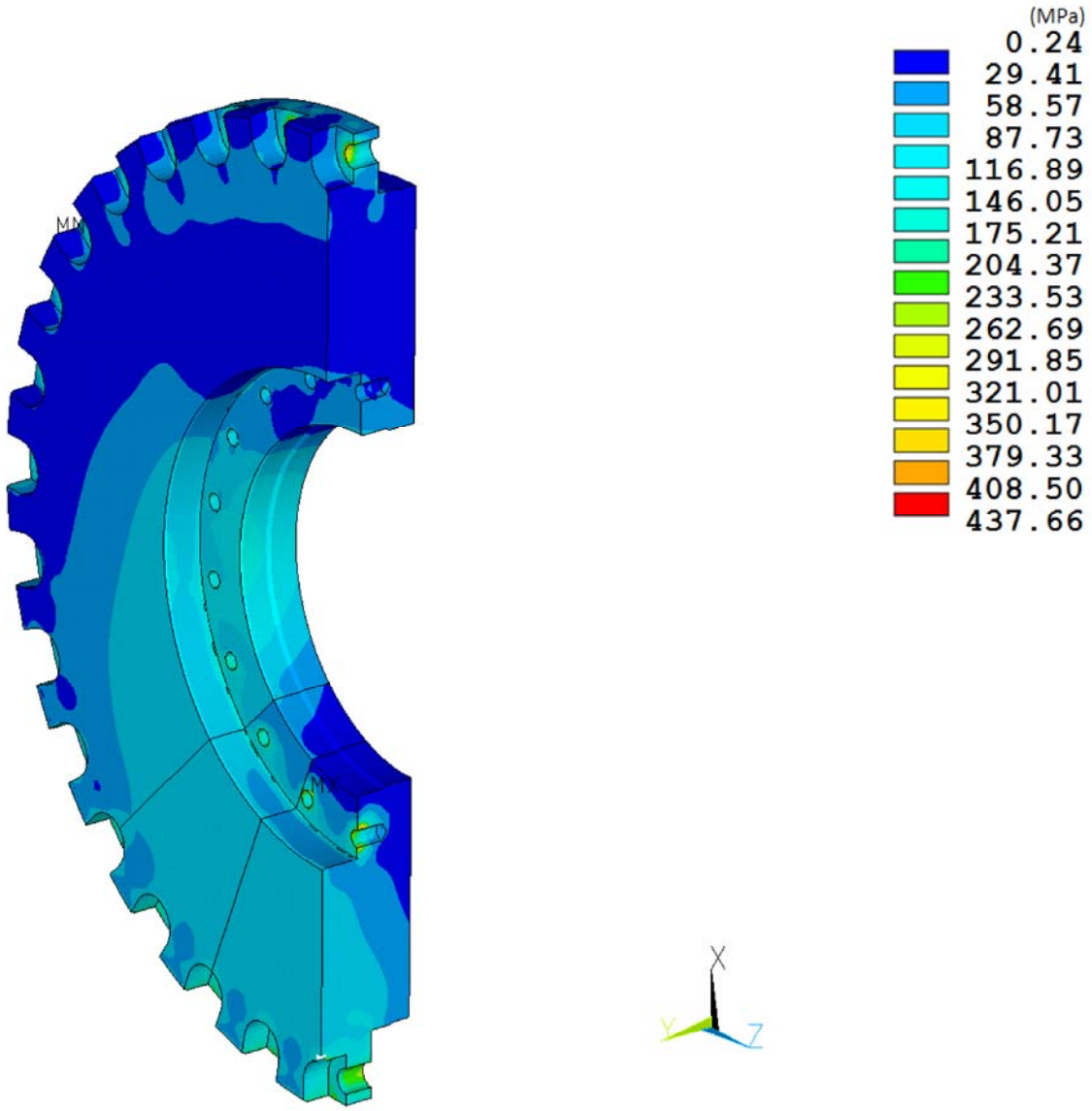

Figure 2.7.1-12 RT-100 Outer Lid HAC Side Drop Stress Intensity Results

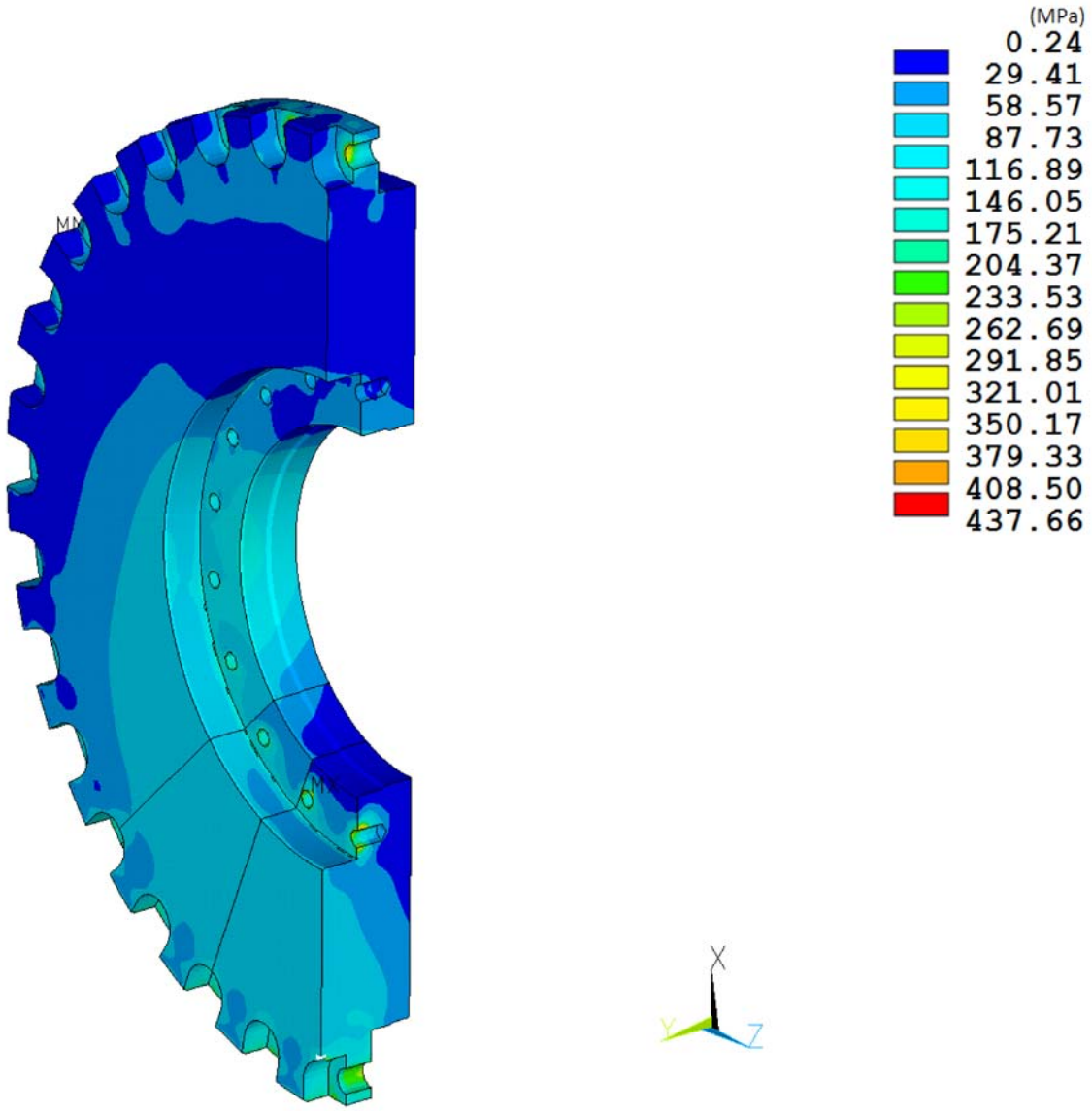

Figure 2.7.1-13 RT-100 Inner Lid HAC Side Drop Stress Intensity Results

2.7.1.3 Corner Drop

In accordance with the requirements of 10 CFR 71.73(c)(1) [Ref. 2], the RT-100 Cask is structurally evaluated for the hypothetical accident 30-foot corner drop condition. Based on the impact limiter analysis provided in Appendix ??, the corner drop configuration is bounded by the end and side drop analyses. Therefore, no further analysis is required.

2.7.1.4 Oblique Drops

In accordance with the requirements of 10 CFR 71.73(c)(1) [Ref. 2], the RT-100 Cask is structurally evaluated for the hypothetical accident 30-foot oblique drop condition. Based on the impact limiter analysis provided in Appendix ??, the oblique drop configuration is bounded by the end and side drop analyses. Therefore, no further analysis is required.

2.7.1.5 Summary of Results

Structural analyses were performed for the Robatel Technologies RT-100 cask for hypothetical accident conditions free drop conditions. To evaluate the RT-100 cask, 3-D ANSYS were used to analyze the governing drop cases. All structural members have a positive margin of safety under worst case loading conditions. It is concluded that the RT-100 cask is structurally adequate for the HAC free drop conditions. Therefore, the requirements of 10 CFR 71.73(c)(1) [Ref. 2] have been satisfied.

2.7.2 Crush

In accordance with the requirements of 10 CFR 71.73(c)(2) [Ref. 2]the RT-100 shall be subjected to a dynamic crush test by evaluating the package on essentially unyielding horizontal surface so as to suffer maximum damage by the drop of a 500-kg mass from 9 m onto the package. The mass must consist of a solid mild steel plate 1 m by 1 m and must fall in a horizontal attitude. The crush test is required only when the specimen has a mass not greater than 500 kg, an overall density not greater than 1000 kg/m^3 based on external dimension. The crush condition is not applicable since the RT-100 Cask weighs more than 500 kg and overall density is greater than 1000 kg/m^3.

2.7.3 Puncture

In accordance with the requirements of 10 CFR 71.73(c)(3) [Ref. 2] for puncture (hypothetical accident condition), the RT-100 Cask is analyzed for structural adequacy [Ref. 36]. The cask is assumed to be in a horizontal position and dropped 1 m onto a 15 cm diameter, mild steel bar, oriented vertically on an unyielding surface. The structural evaluation of the RT-100 is performed by classical elastic analysis and finite element analysis methods.

2.7.3.1 Lid Puncture

Finite element analysis methods are used to perform the stress evaluation of the RT-100 Cask for the end puncture conditions. The end puncture is analyzed using a three-dimensional finite element model using the computational modeling software ANSYS [28]. To simplify the pin

puncture analysis, only the upper end of the cask is considered for this evaluation. Figure 2.7.3-1 shows the pin puncture model.

2.7.3.1.1 Lid Puncture Boundary Conditions

The puncture load is applied to a 152 mm (6 in) diameter region which corresponds to a 152 mm diameter pin. The load is simulated with an evenly distributed pressure load equal to the dynamic flow stress of the pin, which is taken to be 324 MPa (47,000 psi) (2). As discussed in the cask body analysis, the preload torque is included as an initial condition. In addition, the maximum normal operating pressure of 241 KPa (35 psig) is applied to the interior surface of the cask.

2.7.3.1.2 Lid Puncture Results

Stress results for the 1-meter pin puncture combined loading conditions are documented in Table 2.7.3-1. The table documents the primary membrane (Pm), primary membrane plus primary bending (P_m+P_b) stresses in accordance with the criteria presented in Regulatory Guide 7.6 [Ref. 4]. Stresses are linearized across critical sections to determine the membrane and bending stresses which are compared with allowable stress intensities.

As shown in Table 2.7.3-1, the margins of safety when compared to the stress intensity for each category are positive. The most critically stressed component in the system is the flange, which is due to bending as a result of the pin puncture probe striking the center of the lid. The minimum margin of safety is found to be +0.2 for primary membrane plus bending stress intensity. The locations of critical section correspond to the maximum stress location shown in Figure 2.7.3-2.

Table 2.7.3-1 HAC Pin Puncture Stress Summary

Stress State	Location	S1	S2	S3	SINT	Stress Intensity (304)	Allowable Stress	Margin of Safety
INNER LID		MPa	MPa	MPa	MPa	MPa	MPa	
Pm		-108.6	-109.8	-191.5	82.9	137.9	330.9	3.0
Pm + Pb	*Inside*	383.4	382.9	-37.7	421.1	137.9	496.4	0.2
	Center	-108.6	-109.8	-191.5	82.9	137.9	496.4	5.0
	Outside	-342.9	-602.3	-603.3	260.4	137.9	496.4	0.9

2.7.3.2 Cask Side Puncture

The following Sections describe the cask side puncture analysis.

2.7.3.2.1 Cask Side Puncture Minimum Wall Thickness

A series of pin puncture tests performed at Oak Ridge National Laboratory were used to develop an empirical equation for the stress in the outer wall of a multi wall cask as a function of the mass of the cask and the thickness of the cask outer wall material (3). This equation (Nelm's equation) applies to steel-lead-steel cask wall construction and is used to demonstrate-pin puncture adequacy for casks with stainless steel walls, and this equation has been the basis for the puncture analysis of several licensed casks. Solving Nelm's equation for the RT-100 outer shell:

$$t = \left(\frac{W}{S}\right)^{0.71} = 1.16 \text{ in } (29 \text{ mm}) < 35 \text{ mm}$$

where

W = 92,594 lb (42,000 kg), maximum gross weight of the package

S = 75,000 psi (517.1 MPa), ultimate tensile strength of the outer shell.

Nelm's equation shows that the cask outer shell is sufficient to resist puncture.

2.7.3.2.2 Cask Sidewall Bending Stresses

When the cask sidewall impacts the puncture pin, the bending force is:

$$\sigma_b = \frac{M \times c}{I} = 15.3 \text{ MPa}$$

Conservatively assuming the compressive and tensile stresses occur at the same location, the stress intensity is doubled to 30.6 MPa. Therefore, the factor of safety is:

$$FS = \frac{517.1}{30.6} = 15.7 > 1$$

where

$M = \frac{F_i \times m}{4}$ = 1589.2 kN-m, moment due to impact force

$m = \frac{L}{2}$ = 1.16 m, moment arm resulting from impact

$L = h_{tot} - h_u - h_L$ = 2.32 m, sidewall length

h_{tot} = 3312.8 mm, cask total height

h_U = 498 mm, upper impact limiter height

h_L = 494 mm, lower impact limiter height

$Fi = K_s \times A_i$ = 5478.2 kN, impact force

K_s = 324 MPa, dynamic flow stress for mild steel (3)

A_i = $\frac{\pi}{4} \times d_P^2$ = 0.0177 m^2, puncture probe area

d_P = 0.15 m, puncture probe diameter

Therefore, the RT-100 cask sidewall successfully resists the regulatory puncture drop.

2.7.3.3 Lead Deformation during Side Puncture

Following the postulated side puncture of The RT-100 cask, the cask may experience localized deformation of the outer shell. Behind this localized deformation a slight flattening may occur, which results in shielding loss. To quantify this loss, the local stiffness of the cask wall is determined to calculate the energy absorbed by the package. To calculate the total deformation of the lead shield, it is conservatively assumed that the available potential energy of the 1 meter puncture drop is converted to strain energy.

The maximum deformation occurs during postulated puncture event when the cask strikes the puncture probe approximately mid-span on the cask outer shell. Figure 2.7.3-3 shows the side puncture details. For the purposes of this evaluation, the cask is considered a closed cylinder subjected to a concentrated load at the mid-span. The deformation is obtained from Roark's, Table 31, Case 9 [Ref. 29]. The deflection of the outer shell due to the applied load is:

$$y = \frac{P}{Et}\left[0.48 \times \left(\frac{L}{R}\right)^{0.5} \times \left(\frac{R}{t}\right)^{1.22}\right]$$

where

L = length of the cylinder

R = mean radius of the shell

P = applied load

E = Young's modulus

Solving for the stiffness:

$$k = \frac{P}{y} = \frac{Et}{\left[0.48 \times \left(\frac{L}{R}\right)^{0.5} \times \left(\frac{R}{t}\right)^{1.22}\right]}$$

The RT-100 is considered a composite cylinder comprised of an outer shell, lead shield, and inner shell. The resulting stiffness of each component is:

2.7.3.3.1 Outer Shell Stiffness

$$k_1 = \frac{1.989 \times 10^{10} \times 3.505 \times 10^{-2}}{\left[0.48 \times \left(\frac{1.946}{1.003}\right)^{0.5} \times \left(\frac{1.003}{3.505 \times 10^{-2}}\right)^{1.22}\right]} = 1.743 \times 10^{7} \text{ N/m}$$

where

$L = 1.946$ m

$R = 1.003$ m

$t = 3.505 \times 10^{-2}$ m

$P = 6.972 \times 10^{8}$ N

$E = 1.989 \times 10^{10}$ Pa

2.7.3.3.2 Lead Stiffness

$$k_2 = \frac{1.602 \times 10^{9} \times 8.992 \times 10^{-2}}{\left[0.48 \times \left(\frac{1.946}{9.401 \times 10^{-1}}\right)^{0.5} \times \left(\frac{9.401 \times 10^{-1}}{8.992 \times 10^{-2}}\right)^{1.22}\right]} = 1.191 \times 10^{7} \text{ N/m}$$

where

$L = 1.946$ m

$R = 9.401 \times 10^{-1}$ m

$t = 8.992 \times 10^{-2}$ m

$P = 1.441 \times 10^{8}$ N

$E = 1.602 \times 10^{9}$ Pa

2.7.3.3.3 Inner Shell Stiffness

$$k_3 = \frac{1.989 \times 10^{10} \times 1.905 \times 10^{-2}}{\left[0.48 \times \left(\frac{1.946}{8.801 \times 10^{-1}}\right)^{0.5} \times \left(\frac{8.801 \times 10^{-1}}{1.905 \times 10^{-2}}\right)^{1.22}\right]} = 4.945 \times 10^{6} \text{ N/m}$$

where

$L = 1.946$ m

$R = 8.801 \times 10^{-1}$ m

$t = 1.905 \times 10^{-2}$ m

$$P = 3.789 \times 10^{8}\ \text{N}$$

$$E = 1.989 \times 10^{10}\ \text{Pa}$$

2.7.3.3.4 Lead Deformation due to Puncture Load

The effective stiffness of the composite section of the cask is:

$$k_{eff} = k_1 + k_2 + k_3 = 3.428 \times 10^{7}\ \text{N/m}$$

The energy absorbed during impact is:

$$U = \tfrac{1}{2}\, k_{eff} \times \delta^2$$

Assuming the energy absorbed is equal to the total potential energy, the potential energy is calculated as:

$$P.E. = W \times h$$

Setting the energy absorbed during impact equal to the total potential energy the outer shell deformation is:

$$\tfrac{1}{2}\, k_{eff} \times \delta^2 = W \times h \quad \Rightarrow \quad \delta = \sqrt{\frac{2(W \times h)}{k_{eff}}} = 0.049\ \text{m}$$

where

$$W = 40{,}624\ \text{kg}$$

$$H = 1.016\ \text{m}$$

The deformation of the lead is calculated from the ratio of the effective stiffness and lead stiffness:

$$\delta_{lead} = \delta \times \frac{k_2}{k_{eff}} = 0.017\ \text{m}$$

Even though the deformation is comprised of and elastic and inelastic component, the entire deformation is conservatively assumed to be permanent.

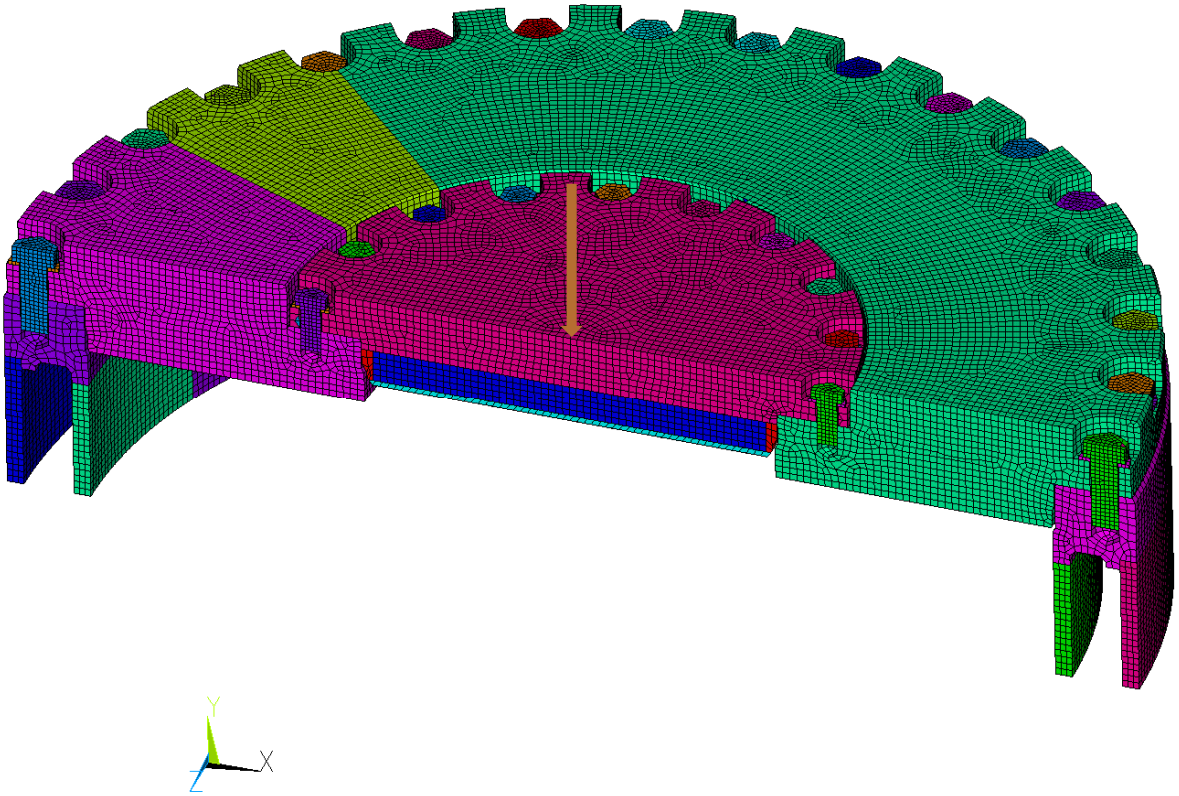

Figure 2.7.3-1 RT-100 ANSYS Puncture Model

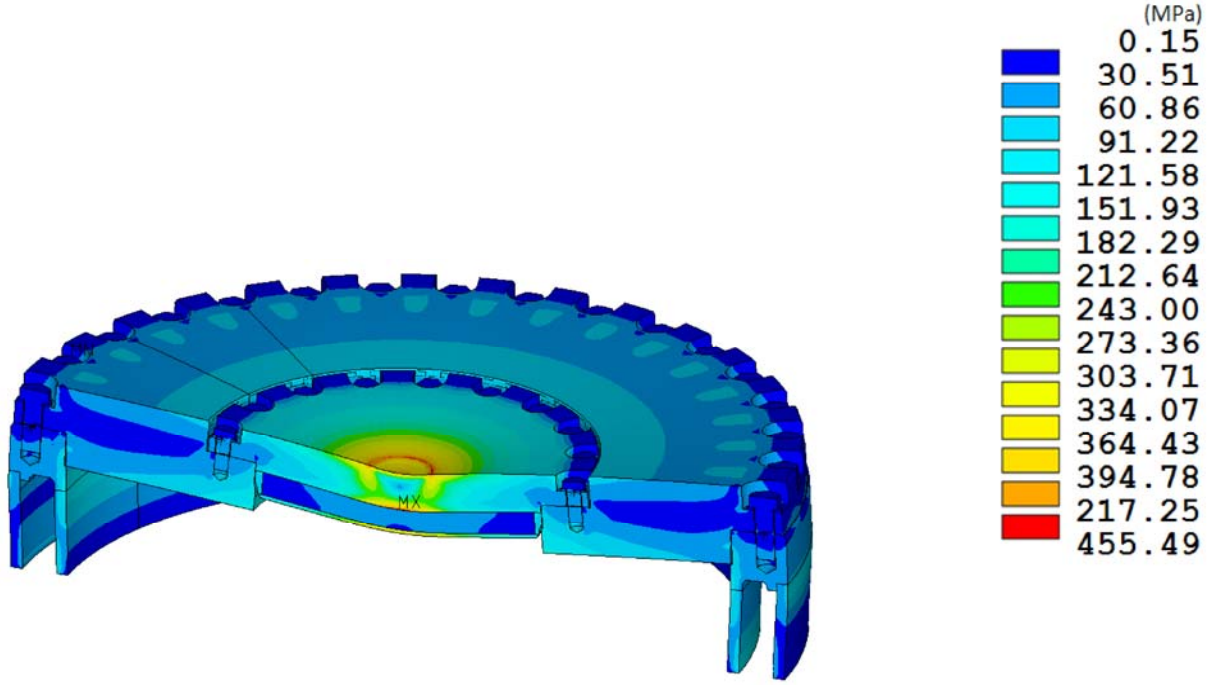

Figure 2.7.3-2 RT-100 Pin Puncture Stress Intensity Results

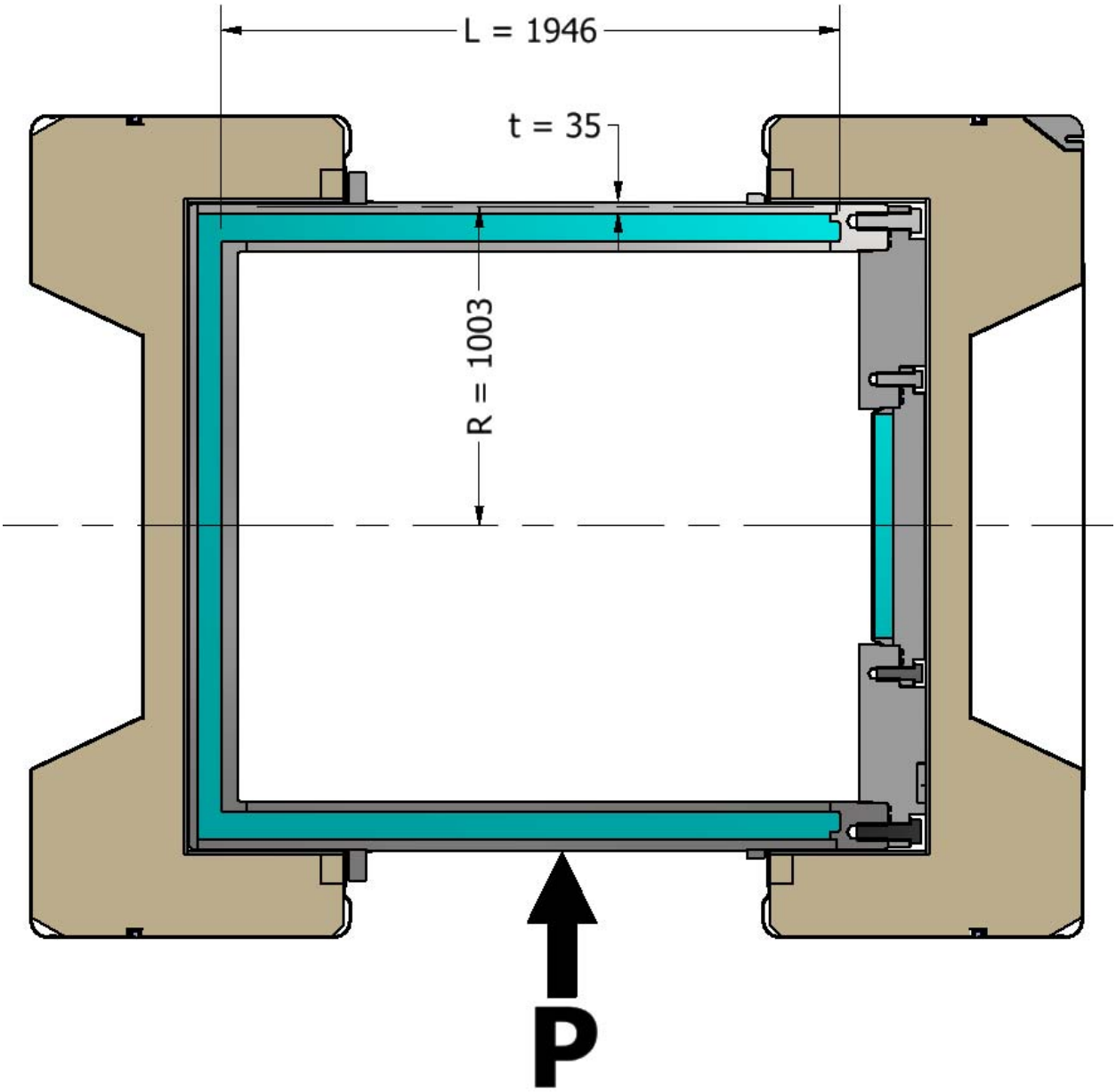

Figure 2.7.3-3 RT-100 Side Puncture Details

2.7.4 Thermal

For hypothetical accident conditions, the RT-100 cask body provides protection and containment of the contents. Thermal expansion of the bolts is evaluated to ensure the containment boundary is maintained. Similarly the cask body evaluated for pressures associated with the fire accident, where the cask is assumed to be subjected to a fire, which produces a surrounding environment of 800°C for a period of 30 minutes. The thermal evaluation of the hypothetical fire transient is presented Section 3.5.

2.7.4.1 Summary of Pressures and Temperatures

Cask components temperatures under different conditions are evaluated using the ANSYS finite element computer code [Ref. 28]. The cask cavity pressure is estimated based on the surface averaged temperature of the inner shell at the cavity side. The detail of the thermal analyses is documented in Section 3.0. Table 3.1.3-1 presents the normal condition maximum temperature. Table 3.1.3-2 presents the maximum temperatures under hypothetical accident conditions, while Table 3.1.4-1 summarizes the maximum normal and hypothetical accident condition pressures.

2.7.4.2 Differential Thermal Expansion

For the RT-100 Cask, the closure bolts are the only components of concern during the fire accident that may experience thermal expansion. The bolting evaluation provided in Appendix 2.14 that determines the effects of thermal expansion on the closure bolts.

2.7.4.3 Stress Calculations

The following Section evaluates the stresses in the bolts and cask body during hypothetical accident conditions.

2.7.4.3.1 Bolt stresses during fire accident

The bolt stress evaluation is presented in Appendix 2.14. The evaluation shows that the bolt stresses are less than the allowables. Therefore, the bolt continue to provide a tight seal and containment is maintained.

2.7.4.3.2 Pressure stress during fire accident

In accordance with the requirements of 10 CFR 71.73(c)(4), the RT-100 Cask is structurally evaluated when subjected to an accident internal pressure of 588 kPa (85.3 psig). Using the ANSYS finite element model, stress results for the accident pressure case are presented in Table 2.7.4-1. The table documents the primary membrane (Pm), primary membrane and plus primary bending (P_m+P_b) stresses in accordance with the criteria presented in Regulatory Guide 7.6. The pressure is based upon an average cask temperature of 110°C. For conservatism, the stress intensity values are compared to allowable stress values at 149°C.

As shown in Table 2.7.4-2, the margins of safety when compared to the stress intensity for each category are positive. The most critically stressed component in the system is the inner lid, which is due to prying load at the interface of the closure bolt and lid. The minimum margin of safety is found to be +5.5 for primary membrane plus bending stress intensity.

2.7.4.4 Comparison with Allowable Stresses

The stress results are presented in Appendix 2.14 and 2.7.4-1. Since the margins of safety are all positive, the RT-100, therefore, satisfies the requirements of 10CFR71.73(c)(4) for the thermal (hypothetical accident) condition.

Table 2.7.4-1 HAC Pressure Stress Summary

Stress State	Location	S1	S2	S3	SINT	Stress Intensity (304)	Allowable Stress	Margin of Safety
INNER SHELL		MPa	MPa	MPa	MPa	MPa	MPa	
Pm		1.2	0.0	-1.0	2.2	111.7	268.1	Large
Pm + Pb	*Inside*	1.2	0.0	-1.1	2.3	111.7	402.1	Large
	Center	1.2	0.0	-1.0	2.2	111.7	402.1	Large
	Outside	1.2	0.0	-0.9	2.1	111.7	402.1	Large
OUTER SHELL		MPa	MPa	MPa	MPa	MPa	MPa	
Pm		1.2	0.0	-0.7	1.9	111.7	268.1	Large
Pm + Pb	*Inside*	1.2	0.0	-0.7	2.0	111.7	402.1	Large
	Center	1.2	0.0	-0.7	1.9	111.7	402.1	Large
	Outside	1.2	0.0	-0.6	1.8	111.7	402.1	Large
FLANGE		MPa	MPa	MPa	MPa	MPa	MPa	
Pm		1.2	0.0	-0.4	1.6	111.7	268.1	Large
Pm + Pb	*Inside*	1.2	0.0	-0.5	1.7	111.7	402.1	Large
	Center	1.2	0.0	-0.4	1.6	111.7	402.1	Large
	Outside	1.2	0.0	-0.4	1.5	111.7	402.1	Large
OUTER LID		MPa	MPa	MPa	MPa	MPa	MPa	
Pm		1.1	0.1	-0.2	1.3	111.7	268.1	Large
Pm + Pb	*Inside*	1.1	0.1	-0.3	1.4	111.7	402.1	Large
	Center	1.1	0.1	-0.2	1.3	111.7	402.1	Large
	Outside	1.0	0.1	-0.2	1.2	111.7	402.1	Large
INNER LID		MPa	MPa	MPa	MPa	MPa	MPa	
Pm		0.2	-2.1	-36.5	36.7	111.7	268.1	6.3
Pm + Pb	*Inside*	-2.1	-6.2	-64.0	61.9	111.7	402.1	5.5
	Center	0.2	-2.1	-36.5	36.7	111.7	402.1	10.0
	Outside	4.1	2.0	-10.6	14.7	111.7	402.1	26.3

2.8 Accident Conditions for Air Transport of Plutonium

This Section is NOT APPLICABLE. The RT-100 cask will not be used to transport Plutonium by air transport.

2.9 Accident Conditions for Fissile Material Packages for Air Transport

This Section is NOT APPLICABLE. The RT-100 cask will be limited by 10 CFR 71 [Ref. 2] on quantities of fissile material. However, the RT-100 will not transport any fissile material by air transport.

2.10 Special Form

This Section is NOT APPLICABLE. The RT-100 Cask Package will not be used to transport special form materials as specified in 10 CFR Part 71 Section 71.75.

2.11 Fuel Rods

This Section is NOT APPLICABLE. The RT-100 Cask Package will not be used to transport fuel rods.

2.12 References

1. Robatel Technologies, LLC, Quality Assurance Program for Packaging and Transportation of Radioactive Material, 10 CFR 71 Subpart H, Dated January 31, 2012 and NRC Approved on March 21, 2012
2. U.S. Nuclear Regulatory Commission, 10 CFR Part 71--PACKAGING AND TRANSPORTATION OF RADIOACTIVE MATERIAL, dated March 7, 2012 and the following specific Sections:

71.31(a)(1)	71.31(a)(2)	71.33	71.35(a)
71.71	71.73	71.41(a)	71.45
71.85(b)	71.4	71.73(c)(1)	71.73(c)(3)
71.85	71.43	71.45(a)	71.45(b)
7.51	71.73(b)	71.71(c)	71.55(e)
71.59(a)(2)	71.85(b)	71.55	71.61
71.74	71.55(f)	71.75	

3. U.S. Nuclear Regulatory Commission, "Load Combinations for the Structural Analysis of Shipping Casks for Radioactive Material," Regulatory Guide 7.8.
4. U.S. Nuclear Regulatory Commission, "Design Criteria for the Structural Analysis of Shipping Cask Containment Vessels," Regulatory Guide 7.6.
5. U.S. Nuclear Regulatory Commission, "Fracture Toughness Criteria of Base Material for Ferritic Steel Shipping Cask Containment Vessels with a Maximum Wall Thickness of 4 Inches (0.1m)," Regulatory Guide 7.11.
6. U.S. Nuclear Regulatory Commission, "Fabrication Criteria for Shipping Containers," NUREG/CR-3854, March 1985.
7. ASME Code, Section III, Subsection ND
8. ASME Code, Section III, Subsection NF
9. U.S. Nuclear Regulatory Commission, "SCANS (Shipping Cask Analysis System): A Microcomputer Based Analysis System for Shipping Cask Design Review," NUREG/CR-4554, Volumes 3, 6 and 7, February 1990.
10. U.S. Nuclear Regulatory Commission, "Stress Analysis of Closure Bolts for Shipping Casks," NUREG/CR-6007, January 1993.
11. NUREG/CR-0481

12. U.S. Nuclear Regulatory Commission, Standard Review Plan for Transportation Packages for Radioactive Material, NUREG-1609, March 31, 1999
13. U.S. Government Code of Federal Regulations, Request for Withholding Information Contained in License Application, 10 CFR 2.790
14. U.S. Nuclear Regulatory Commission, "Dynamic Analysis to Establish Normal Shock and Vibration of Radioactive Material Shipping Packages, Volume 3: Final Summary Report," NUREG/CR-2146, Vol. 3, October 1983.
15. U.S. Nuclear Regulatory Commission, "Engineering Drawings for 10 CFR Part 71 Package Approvals," NUREG/CR-5502, May 1998.
16. U.S. Nuclear Regulatory Commission, "Fracture Toughness Criteria of Base Material for Ferritic Steel Shipping Cask Containment Vessels with a Wall Thickness Greater than 4 Inches (0.1m)," Regulatory Guide 7.12.
17. U.S. Nuclear Regulatory Commission, "Methods for Impact Analysis of Shipping Containers," NUREG/CR-3966, November 1987.
18. U.S. Nuclear Regulatory Commission, "Puncture Testing of Shipping Packages under 10 CFR Part 71," Bulletin 97-02, September 23, 1997.
19. U.S. Nuclear Regulatory Commission, "Recommended Welding Criteria for Use in the Fabrication of Shipping Containers for Radioactive Materials," NUREG/CR-3019, March 1985.
20. U.S. Nuclear Regulatory Commission Bulletin, 97-02.
21. U.S. Nuclear Regulatory Commission, "Shock and Vibration Environments for a Large Shipping Container During Truck Transport (Part II)," NUREG/CR-0128, August 1978.
22. U.S. Nuclear Regulatory Commission, Dynamic Analysis to Establish Normal Shock and Vibration of Radioactive Material Shipping Packages, NUREG-2146, Volumes 1, 2 and 3, dated January 1, 1981-March 31, 1981; April 1, 1981-June 30, 1981; and October 1993, respectively.
23. U.S. Nuclear Regulatory Commission, International Agreement Report, International Code Assessment and Applications Program: Summary of Code Assessment Studies Concerning RELAP5/MOD2, RELAP5/MOD3, and TRAC-B, December 1993.
24. EPRI "Good Bolting Practices", Volume 1, Large Bolt Manual, 1987.
25. Blodgett, O. W., "Design of Welded Structures", The James F. Lincoln Arc Welding Foundation, Cleveland, Ohio.
26. AISC, "Guide to Design Criteria for Bolted and Riveted Joints", 2nd Edition, 2007.
27. Oberg, Erik, "Machinery's Handbook", 26th Edition.
28. ANSYS Mechanical, Version 14.
29. Young, Warren C., "Roark's Formulas for Stress and Strain", 6th Edition.
30. U.S. Nuclear Regulatory Commission, "Shock and Vibration Environments for a Large Shipping Container During Truck Transport" NUREG-0128.
31. ASME Code, Section II-D, Materials.
32. ASME Code, Section III, Division III.
33. RTL-001-CALC-ST-0201, Rev. 1, Lifting Structural Evaluation (Proprietary).
34. RTL-001-CALC-ST-0202, Rev. 1, Tie-Down Evaluation (Proprietary).
35. RTL-001-CALC-ST-0402, Rev. 0, Cask Body Structural Evaluation (Proprietary).
36. RTL-001-CALC-ST-0403, Rev. 0, Pin Puncture Evaluation (Proprietary).

37. Kasparek, E. M., "Numerical and Experimental Investigation of Polyurethane Foam for use as Cask Impact Limiter in Accidental Drop Scenarios", BAM Federal Institute for Material Research and Testing, Proceedings: Waste Management Conference 2012, Phoenix, AZ.
38. RTL-001-CALC-TH-0102, Rev. 1, RT-100 Cask Maximum Normal Operating Pressure Calculation (Proprietary).
39. EPRI, "Good Bolting Practices", NP-5769.
40. RTL-001-CALC-ST-0401, Rev. 1, RT-100 Cask Impact Limiter Drop Evaluation (Proprietary).
41. U.S. Nuclear Regulatory Commission, "Methods for Impact Analysis of Shipping Containers", NUREG/CR-3966.
42. RTL-001-CALC-TH-0102, Rev. 1, RT-100 Cask Maximum Normal Operating Pressure Calculation (Proprietary).
43. RTL-001-CALC-TH-0202, Rev. 1, RT-100 Cask Hypothetical Accident Condition Maximum Pressure Calculation.
44. ASME B1.13M-2005, METRIC SCREW THREADS: M PROFILE.

2.13 Appendix 2 - Impact Limiter Analysis

This Section is considered proprietary information and is included in the Safety Analysis Report, Volume II, Proprietary Information.

2.14 Appendix 2 - Closure Bolt Evaluation

This Section is considered proprietary information and is included in the Safety Analysis Report, Volume II, Proprietary Information.

2.15 Appendix 2 – Fabrication Stresses

This Section is considered proprietary information and is included in the Safety Analysis Report, Volume II, Proprietary Information.

3 THERMAL EVALUATION

Robatel has performed a thermal evaluation of the RT-100 Cask Package using the Nuclear Industry standards and under the RT Company Quality Assurance Program [Ref. 1]. This thermal evaluation shows that the RT-100 meets or exceeds all the 10 CFR Part 71 regulatory requirements. The thermal review is based in part on the descriptions and evaluations presented in the General Information and Structural Evaluation Sections of the application. Similarly, results of the thermal review are considered in the review of several other sections of the application. An example of information flow for the thermal review is shown in Figure 3-1 on the following page.

Robatel will identify, describe, discuss, and analyze the principal thermal engineering design of the RT-100 Cask Package, components, and systems that are important to safety, and describe how the package complies with the performance requirements of 10 CFR Part 71[Ref. 2]. The results of this thermal evaluation verified that the thermal performance of the RT-100 Cask Package design for the thermal tests specified under normal conditions of transport and hypothetical accident conditions meets the thermal regulatory requirements as follows:

- The RT-100 Cask Package design is described and evaluated to demonstrate that it satisfies the thermal requirements of 10 CFR Part 71Sections 71.31(a)(1); 71.31(a)(2); 71.33, and 71.35(a) [All Ref. 2].
- The application identifies the established codes and standards used for the thermal design according to 10 CFR Part 71 Section 71.31(c) [Ref. 2].
- The performance of the RT-100 Cask Package was evaluated under the tests specified in 10 CFR Part 71 Section 71.71 [Ref. 2] for normal conditions of transport and 10 CFR Part 71 Section 71.73 [Ref. 2] for hypothetical accident conditions and also referenced 10 CFR Part 71 Section 71.41(a) [Ref. 2].
- The RT-100 Cask Package was designed, constructed, and prepared for transport so that there will be no significant decrease in packaging effectiveness under the tests specified in 10 CFR Part 71 Section 71.71 (normal conditions of transport) and references in 10 CFR Part 71 Sections 71.43(f) [Ref. 2]and 71.51(a)(1) [Ref. 2].
- The RT-100 Cask Package was designed, constructed, and prepared for transport so that the accessible surface temperature does not exceed the regulatory limits specified in 10 CFR Part 71 Section 71.43(g) [Ref. 2].

- The RT-100 Cask Package design does not rely on mechanical cooling systems to meet containment requirements in reference to 10 CFR 71 Section 71.51(c) [Ref. 2].
- The RT-100 Cask Package has adequate thermal performance to meet the containment, shielding, subcriticality, and temperature requirements of 10 CFR Part 71, under normal conditions of transport and hypothetical accident conditions.

Figure 3-1 Information Flow for the Thermal Review

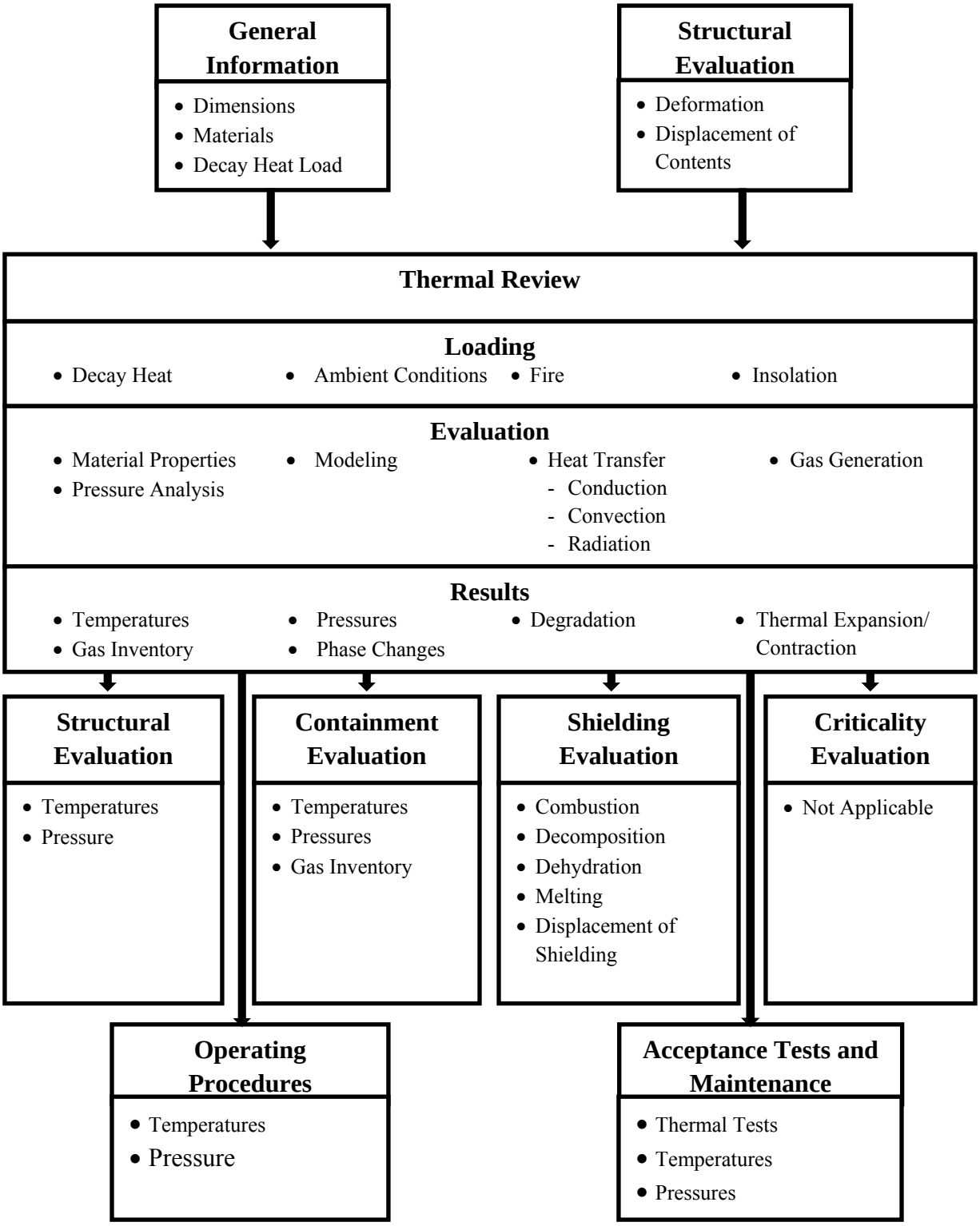

3.1 Description of Thermal Design

The thermal design aspects of the RT-100 are related primarily to protecting the sensitive components of the cask and the contents from the elevated temperatures produced by the hypothetical fire accident. The primary thermal criteria that are applied to the thermal evaluation are to maintain the lead shielding in the cask body and secondary lid below the melting temperature of lead and to maintain the maximum temperature of the O-ring seals below their maximum operating temperature. The components primarily responsible for maintaining the temperatures of these components below their acceptance criteria are the impact limiters covering the top and bottom of the cask and the thermal shield on the radial cask surface.

The impact limiters are made from a polyurethane foam material that has a low thermal conductivity. The impact limiters cover the top and bottom ends of the cask, and protect the lead in the bottom of the cask body and the O-ring seals in the primary and secondary lids and the vent port cover plate. The impact limiters are designed to remain attached to the cask during normal and hypothetical accident condition and insulate the lead and O-rings from the high temperatures of the hypothetical fire accident. The thermal shield covering the radial cask surface is made of a ceramic fiber material with a very low conductivity. The ceramic fiber is covered by a thin stainless steel cover that protects it from damage during normal handling. The ceramic fiber material is designed for use in insulating refractory furnaces, and provides an excellent thermal barrier for the fire accident, preventing the radial lead from exceeding its melting point.

The RT-100 is designed to accommodate contents with a maximum decay heat of 200 watts. This low decay heat value does not produce a significant temperature gradient through the cask body, and as a result, no specific design features are required to facilitate removing the heat from the cavity.

3.1.1 Design Features

As briefly described in Section 3.1, the RT-100 design has two primary thermal design features, the impact limiters and the radial thermal shield. These features are identified in Figure 1.2-1, which highlights the primary components of the cask.

3.1.1.1 RT-100 Description

The RT-100 cask body is constructed of inner and outer shells constructed of 304/304L stainless steel. Lead shielding is provided between these radial shells, and between the 304/304L stainless steel bottom forging and bottom plate. The upper end of the cask comprises the upper 304/304L stainless steel forging that is attached to the inner and outer shells, and contains the mating surface for the primary lid. The primary and secondary lids are also constructed of 304L stainless steel, as is the cover plate. The primary lid is attached using 32 M48 hex head bolts and the secondary lid is secured using 18 M36 hex head bolts. The upper and lower impact limiters

cover ends of the cask, and are constructed of 304L stainless steel shells containing polyurethane foam blocks. The impact limiters are secured to the body via 12 M24 threaded studs. The RT-100 is described in greater detail in Section 1.2.1.

Most of the outer shell of the cask is covered by a ceramic fiber thermal shield that is secured by a thin 304L stainless steel cover. Other portions of the radial cask surface are covered by the 308 stainless steel tie-down arms and tie-down arm baseplate, and the 304L stainless steel lifting blocks. The exposed surfaces of the tie-down arm baseplate are also covered by the ceramic fiber thermal shield and 304L stainless steel cover.

3.1.1.2 RT-100 Dimensions

The thermal analysis of the RT-100 is performed using the basic dimensions of the cask as presented in Appendix 1-2, Volume II, Proprietary Information. For conservatism, the inner and outer shell thicknesses at the side of the cask are reduced to account for minimum thickness due to manufacturing tolerances. In particular, thicknesses of the cask body inner and outer stainless steel shells and, at the bottom end of the cask body, the stainless steel bottom forging welded to the inner shell and the stainless steel bottom plate welded to the outer shell, are all reduced by 2 mm. To represent the condition of undersized shells with a poured lead fill, lead thickness in both the sidewalls and the cask bottom end was simultaneously increased by 4 mm. This is conservative as it reduces the amount of stainless steel material present between the lead and the high temperatures of the hypothetical fire accident, maximizing temperatures in the lead.

In order to maximize the amount of heat that can enter the cask body during the fire, no gaps are assumed between the lead and the outer shell. The lead and stainless steel outer shell are assumed to be in perfect contact. No other gaps are assumed in the thermal evaluation between the various components of the cask.

3.1.2 Content's Decay Heat

The RT-100 is designed for a maximum decay heat of 200 watts. This value was selected as the design basis, and is conservative for the contaminated resin and filter contents that will be transported in the cask. As indicated in Section 5.2, the actual decay heat value for a representative loading is less than 50 watts. Therefore, the use of a 200-watt design basis is conservative.

The analysis of the cask for normal and hypothetical accident conditions is performed using the ANSYS finite element computer code [Ref. 3]. In this analysis, the decay heat of the contents is modeled as a uniform heat flux on the internal surfaces of the cask cavity. This uniform heat flux is determined to be 13.04 W/m2 as shown in Section 6.6 of the Cask Thermal Analysis Calculation Package TH 0201[Ref. 4].

3.1.3 Summary Tables of Temperatures

This Section presents summary tables of the maximum temperatures occurring in the RT-100 as a result of the normal and hypothetical evaluations described in detail in Sections 3.3 and 3.4. The limiting temperatures for consideration in the structural and containment evaluations are the maximum temperatures. Therefore the following tables present the maximum temperatures that occur in the various cask components under normal and hypothetical accident conditions. Table 3.1.3-1 presents the normal condition maximum temperatures while Table 3.1.3-2 presents the maximum temperatures under hypothetical accident conditions. For the fire accident evaluation, the time at which the component reaches its maximum temperature is listed along with the temperature. In some cases, the temperatures are after cessation of the fire transient.

Table 3.1.3-1 RT-100 Maximum Normal Condition Temperature Summary

Component	Maximum Temperature	Allowable Temperature	
	Value (°C)	Value (°C)	Reference
Cask Surface	41	50/85	10 CFR 71.43(g)
Impact Limiter Surface	40	50/85	10 CFR 71.43(g)
Outer Shell	74	-	Note 1
Inner Shell	73	-	Note 1
Lids	71	-	Note 1
Base Plate	73	-	Note 1
Lead	73	328	Ref. 5
O-Ring Seals	70	150	Ref. 8

Note 1 – Values are utilized in structural analysis to determine temperature dependent material allowable.

Table 3.1.3-2 RT-100 Maximum Hypothetical Accident Condition Temperature Summary

Component	Maximum Temperature		Allowable Temperature	
	Value (°C)	Time After Fire (Seconds)	Value (°C)	Reference
Outer Surface	799	During Fire	-	Note 1
Inner Shell	265	1,056	-	Note 1
Inner Shell Average	108	1,056	-	-
Lids	296	0	-	Note 1
Base Plate	95	19,511	-	Note 1
Lead	294	276	328	Ref. 5
Seals	123	157	150	Ref. 8

Note 1 – Values are utilized in structural analysis to determine temperature dependent material allowable.

3.1.4 Summary Tables of Maximum Pressures

The maximum internal pressures in the RT-100 cask are determined using the maximum temperatures presented in Tables 3.1.3-1 and 3.1.3-2 above. Details of these pressure calculations are presented in Section 3.3.2 for normal conditions of transport and in Section 3.4.3 for hypothetical accident conditions. Table 3.1.4-1 presents a summary of the maximum pressure calculations for normal and accident conditions. These pressures are utilized in the structural calculations presented for the cask body in Sections 2.6 and 2.7.

Table 3.1.4-1 RT-100 Summary of Maximum Normal and Hypothetical Accident Condition Pressures

Condition	Maximum Pressure
Normal Conditions of Transport	342.7 kPa (49.7 psia)
Hypothetical Accident Conditions	689.4 kPa (100 psia)

3.2 Material Properties and Component Specifications

The material properties and specifications for the RT-100 materials of construction are presented in this section. The determination of material properties are carefully evaluated to ensure that for each thermal analysis:

- The appropriate thermal properties for the package materials have been correctly incorporated into the thermal evaluations.
- Appropriate expressions have been used for conductive, convective and radiative heat transfer among package components and from the surfaces of the package to the environment.

3.2.1 Material Properties

The thermal evaluation of the RT-100 is performed using material properties taken from standard industry references or manufacturer provided data in Tables 3.2-1 through 3.2-4. The thermal absorptivities and emissivities are appropriate for the package surface conditions and each thermal condition. When reporting a property as a single value, the evaluation shows that this value bounds the equivalent temperature-dependent property. This Section includes references for the data provided.

Table 3.2-1 Temperature-Independent Material Properties

Material	Properties	Reference: Page Number	Value
Stainless Steel 304	Density	Ref. 5: Page 907	7900 kg/m^3
	Emissivity (fire and cool-down)	Ref. 2	0.9
	Emissivity (normal condition)	Ref. 5: Page 750 and 929	0.2
Lead	Density	Ref. 5: Page 907	11340 kg/m^3
	Melting Point	Ref. 5: Page 907	328°C (601 K)
Ceramic Paper	Density	Ref. 9	176.2 kg/m^3 (11 lb/ft^3)
	Specific Heat		1172.5 J/kg-K @ 1366.5K (0.28 BTU/lb-°F @ 2000°F)
Polyurethane Foam FR-3720	Density	Ref. 10	320 kg/m^3
	Specific Heat		1477 J/kg-K @ 298K (1.477 J/g-°C @ 25°C)
	Thermal Conductivity		0.05 W/m-K
Polyurethane Foam FR-3740	Density	Ref. 11	641 kg/m^3
	Specific Heat		1477 J/kg-K @ 298K (1.477 J/g-°C @ 25°C)
	Thermal Conductivity		0.087 W/m-K
Polyurethane Foam FR-3705	Density	Ref. 12	80 kg/m^3
	Specific Heat		1477 J/kg-K @ 298K (1.477 J/g-°C @ 25°C)
	Thermal Conductivity		0.029 W/m-K
Seal (EPDM)	Working Temperature	Ref. 8	-45°C to 150°C

Table 3.2-2 Temperature-Dependent Material Properties—Stainless Steel 304
(Ref. 13, page 765)

Temperature (°C)	Specific Heat (J/kg-K)	Thermal Conductivity (W/m-K)
21	4.836E+02	1.488E+01
38	4.860E+02	1.505E+01
66	4.962E+02	1.557E+01
93	5.062E+02	1.609E+01
121	5.159E+02	1.661E+01
149	5.201E+02	1.696E+01
177	5.294E+02	1.748E+01
204	5.352E+02	1.800E+01
232	5.390E+02	1.834E+01
260	5.476E+02	1.886E+01
288	5.480E+02	1.921E+01
316	5.514E+02	1.955E+01
343	5.565E+02	2.007E+01
371	5.597E+02	2.042E+01
399	5.598E+02	2.076E+01
427	5.676E+02	2.128E+01
454	5.706E+02	2.163E+01
482	5.706E+02	2.198E+01
510	5.735E+02	2.232E+01
538	5.734E+02	2.267E+01
566	5.805E+02	2.319E+01
593	5.832E+02	2.353E+01
621	5.830E+02	2.388E+01
649	5.856E+02	2.423E+01
677	5.923E+02	2.474E+01
704	5.919E+02	2.509E+01
732	5.944E+02	2.544E+01
760	5.968E+02	2.578E+01
788	5.991E+02	2.613E+01
816	6.014E+02	2.647E+01

Table 3.2-3 Temperature-dependent Material Properties—Lead
(Ref. 5, page 907)

Temperature (°C)	Specific Heat (J/kg-K)	Thermal Conductivity (W/m-K)
-173.15	118	3.97E+01
-73.15	125	3.67E+01
26.85	129	3.53E+01
126.85	132	3.40E+01
326.85	142	3.14E+01

Table 3.2-4 - Temperature-dependent Material Properties—Ceramic Paper
(Ref. 9)

Temperature (°C)	Thermal Conductivity (W/m-K)
93.3	4.759E-02
204.4	5.206E-02
315.6	5.912E-02
426.7	6.907E-02
537.8	8.219E-02
648.9	9.834E-02
760.0	1.174E-01
871.1	1.396E-01

3.2.2 Component Specifications

This section includes the technical specifications of RT-100 Cask Package components that are important to the thermal performance, as illustrated by the following examples:

- In the case of seals, the operation temperature limits
- Maximum allowable service temperatures for package components, and
- Minimum allowable service temperature of all components, which are less than or equal to -40 degrees C (-40 degrees F).

Table 3.2-5 lists the maximum and/or minimum allowable temperatures for the critical cask components.

Table 3.2-5 – Component Specifications – Minimum and Maximum Temperatures

Material	Min. Temp.	Max. Temp.	Reference
304/ 304L SS	-	>1400°C (Melting Temp.)	Ref. 14
Lead	-	328°C (Melting Temp.)	Ref. 5
Polyurethane Foam	-	1093°C (2000°F of Foam Char Temp.)	Ref. 15
Seal (EPDM)	-45°C	150°C	Ref. 8

3.3 Thermal Evaluation under Normal Conditions of Transport

This Section describes the thermal evaluations performed for the RT-100 for the normal conditions of transport specified in 10 CFR 71.71 [Ref. 2]. The evaluation considers the response of the cask to a range of temperature and environmental conditions as described in Section 3.3.1. The results are compared with allowable limits of temperature, pressure, etc., for the package components. The information is presented in summary tables, along with statements and appropriate comments. Information that is to be used in other sections of the review is identified. The margins of safety for package temperatures, pressures, and thermal stresses, including the effects of uncertainties in thermal properties, test conditions and diagnostics, and analytical methods, are addressed.

The analyses are shown to be reliable and repeatable.

The following general information was considered and included in addressing the sections below, as appropriate:

- Assumptions that are used in the analysis have been clearly described and justified.
- For computer analyses, including finite element analyses, the computer program is described, and shown to be well benchmarked and widely used for thermal analyses and applicable to the evaluation.
- Models and modeling details are clearly described.
- The methods used have been properly referenced or developed in the application.
- These methods have been correctly applied.
- The evaluation has considered changes in package geometry and material properties resulting from structural and thermal tests under normal conditions of transport and hypothetical accident conditions.

- The required temperature and thermal boundary conditions for normal conditions of transport and hypothetical accident conditions have been correctly applied.
- The time interval after the fire test is adequate to assure that maximum component temperatures and post-fire steady-state temperatures were achieved.
- The maximum temperatures and pressures of the components do not exceed their allowable values.
- Combustion of package components has been considered, including the heat produced.
- Temperature data is reported at gaskets, valves, and other containment boundaries, particularly for temperature-sensitive materials, as well as for the overall package.
- Appropriate corrections and evaluations that account for differences in the thermal test have been included for conditions like ambient temperature, decay heat of the contents, or package emissivity or absorptivity.
- Both interior and exterior temperatures are included.
- The damage caused by the tests and the results of any measurements that were made is reported in detail, including photographs of the testing and the test specimen.

3.3.1 Heat and Cold

This Section demonstrates that the tests for normal conditions of transport do not result in a significant reduction in the RT-100 Cask Package effectiveness. The following items were considered and addressed:

- Degradation of the heat-transfer capability of the packaging (such as creation of new gaps between components)
- Changes in material conditions or properties (e.g., expansion, contraction, gas generation, and thermal stresses) that affect the structural performance
- Changes in the packaging that affect containment, shielding, or criticality (such as thermal decomposition or melting of materials)
- Ability of the packaging to withstand the tests under hypothetical accident conditions

The component temperatures and pressures are compared to their allowable values and do not exceed them. This section explicitly shows that the package meets the maximum temperature of the accessible package surface is less than 50 degrees C (122 degrees F) for non-exclusive-use shipment or 85 degrees C (185 degrees F) for exclusive use shipment when the package is subjected to the heat conditions of 10 CFR Part 71 Section 71.43(g) [Ref. 2].

3.3.1.1 Load Cases

In order to evaluate the RT-100 for the range of temperature and solar insolation conditions specified in 10 CFR 71.71 [Ref. 2] for normal conditions, four load cases are analyzed:

- Hot case 1
- Hot case 2
- Cold case 1
- Cold case 2

Hot case 1 is based on the requirements of 10 CFR 71.71(c)(1) [Ref. 2], which is one of the extreme initial conditions for normal conditions and a precursor for the hypothetical fire accident evaluation. It has the following conditions:

- Ambient temperature, 38°C
- Initial temperature, 38°C
- Heat transfer to ambient by natural convection, still air
- Heat transfer to ambient by radiation
- Solar insolation as a periodic heat flux applied as 12-hr on and 12-hr off
- Internal heat load as a uniform heat flux, 13.04 W/m^2

Hot case 2 is based on the requirements of 10 CFR 71.43(g) [Ref. 2]. It has the following conditions:

- Ambient temperature, 38°C
- Initial temperature, 38°C
- Heat transfer to ambient by natural convection, still air
- Heat transfer to ambient by radiation
- No solar insolation, in shade
- Internal heat load as a uniform heat flux, 13.04 W/m^2

Cold case 1 is based on the requirements of 10 CFR 71.71(c)(2) [Ref. 2], which is another extreme initial condition for the NCT test evaluation. It has the following conditions:

- Ambient temperature, -40°C
- Initial temperature, -40°C
- Heat transfer to ambient by natural convection, still air
- Heat transfer to ambient by radiation
- No solar insolation, in shade
- Internal heat load as a uniform heat flux, 13.04 W/m^2

Cold case 2 is based on the requirements of 10 CFR 71.71(b) [Ref. 2]. It has the following conditions:

- Ambient temperature, -29°C
- Initial temperature, -29°C
- Heat transfer to ambient by natural convection, still air
- Heat transfer to ambient by radiation
- No solar insolation
- Internal heat load as a uniform heat flux, 13.04 W/m^2

Among them, hot case 1 and cold case 1 are two extreme conditions for the analyses. Hot case 1 is also referred to as the "normal hot" condition on which the conservative boundary conditions are applied. This case provides the highest temperature distributions within the cask and is used as the initial conditions for evaluation of the hypothetical fire accident event as described in Section 3.4.

3.3.1.2 Analytical Model

The analytical model is considered Proprietary Information. It is included in Section 3.3.1.2 of the Safety Analysis Report, Volume II, Proprietary Information.

3.3.1.3 Analysis Results

The analysis results are considered Proprietary Information. The analysis results are included in Section 3.3.1.3 of the Safety Analysis Report, Volume II, Proprietary Information.

3.3.2 Maximum Normal Operating Pressure

The maximum pressure in the RT-100 cask for normal conditions of transport is calculated using the maximum temperatures determined for the range of normal condition load cases. The calculation considers possible sources of gases, including the following:

- Gases initially present in the package
- Saturated vapor, including water vapor from the contents or packaging
- Hydrogen or other gases resulting from thermal- or radiation-induced decomposition of materials such as water or plastics

A summary of the pressure calculation is provided in the following sections. Additional details are provided in the Cask Maximum Normal Operating Pressure Calculation Package TH 0102 [Ref. 6].

3.3.2.1 Calculation Method

To determine the maximum normal operating pressure, the temperature of the gas mixture within the cask is evaluated. The maximum temperature of the cask cavity under normal condition is bounded by upper and lower temperature range of 80 °C to -29 °C (See Section 5.1). The total pressure in the cavity is represented by the sum of the primary contributors to the pressure. These are the pressure due to the increase temperature of the cavity gas (ideal gas law), the pressure due to the presence of water vapor and the pressure due to the generation of gas generated via radiolysis.

The restriction of the contents to inorganic materials eliminates the potential for gas generation due to thermal degradation or biological activity. Thus, these gas sources are not considered in the evaluation. However, water vapor is present in trace quantities. Therefore, the analysis considers the contribution from the radiolytic decomposition of residual water in the cask cavity.

Per the ideal gas law, air pressure and water vapor pressure are directly proportional to the temperature and with increase in temperature, the pressure also increases. The upper bound temperature will result in a higher maximum normal operating pressure for the cask compared to the lower bound. The gas mixture in the cavity is conservatively assumed to be 80 °C.

3.3.2.2 Pressure Due to the Initially Sealed Air in the Cavity

Per the ideal gas law, the partial pressure of the air (P_{air}) initially sealed in the fixed volume of the cask at the ambient temperature as it is heated to 80 °C is:

$P_1 \times T_2 = P_2 \times T_1$

P_{air} = 101.35 kPa[(353.15 K) / (294.25 K)] = 121.64 kPa (17.64 psia)

3.3.2.3 Pressure Due to the Water Vapor in the Cask

The cask cavity is assumed to contain a small amount of water. By conservatively assuming a condensing surface temperature of 80 °C, the water vapor pressure, P_{wv}, at this temperature is 47.36 kPa [6.87 psia].

Adding the water vapor pressure at 80 °C to the partial pressure of the air in the sealed cask at this temperature gives:

$P_2 = P_{air} + P_{wv}$ = 121.64 + 47.36 = 169.0 kPa [24.51 psia]

3.3.2.4 Pressure Due to Generation of Gas

Solidified or dewatered material may contain some water. Therefore, radiolytic generation of gases from this water could occur. Hydrogen and oxygen may be produced in the cask by radiolytic decomposition of residual water in the cask contents. As described in Section 1.2, the

maximum quantity of hydrogen must be limited to less than 5% to ensure that an explosive quantity does not accumulate.

For conservatism, the cask atmosphere can be assumed to contain 5% of hydrogen (H_2) gas due to radiolysis of the water. By stoichiometry of the water molecule (H_2O), the cask atmosphere will also contain 2.5% oxygen (O_2) gas generated by radiolysis. Partial pressures in an ideal gas mixture are additive and behave the same as ideal gas volume fraction or mole fractions. Therefore, the partial pressure of hydrogen is described by the following equation:

$P_{H2} = 0.05\ P_{pt}$

Where, $P_{pt} = P_{air} + P_{wv} + P_{H2} + P_{O2}$

Combining $P_{air} + P_{wv} = P_2$ and noting that $P_{O2} = 0.5 \times P_{H2}$.

$P_{H2} = 0.05 \times (P_2 + 1.5\ P_{H2})$

Solving the equation explicitly for P_{H2} gives:

$$\begin{aligned} P_{H2} &= [0.05\ P_2] / [1 - 0.05\ (1.5)] \\ &= [0.05 * 169.0\ \text{kPa}] / [1 - 0.05\ (1.5)] \\ &= 9.14\ \text{kPa}\ [1.32\ \text{psia}] \end{aligned}$$

3.3.2.5 Total Pressure

Based on the stoichiometric relationship between hydrogen and oxygen liberated by radiolysis of water, and again combining the pressure of the initially sealed air and water vapor as P_2, the total pressure in the cask at 80 °C is:

$$\begin{aligned} P_{Total} &= P_2 + 1.5\ P_{H2} \\ &= 169.0\ \text{kPa} + 1.5 * 9.14\ \text{kPa} \\ &= 182.71\text{kPa}\ [26.5\ \text{psia}] \end{aligned}$$

The design basis maximum normal operating pressure value is conservatively set at 342.7 kPa (49.7 psia or 30 psig) for use in the cask structural analyses for the normal conditions of transport.

3.4 Thermal Evaluation under Hypothetical Accident Conditions

This Section describes the thermal evaluation of the RT-100 under hypothetical accident conditions. The hypothetical accident conditions defined in 10 CFR 71.73 have been applied sequentially, considering the damaged condition of the packaging following the 30-foot free drop and pin puncture accident events prior to the fire transient. For the accident condition thermal evaluation, the general comments in Section 3.3, above, are considered and addressed, as appropriate.

As described in Section 2.7.5, different pin puncture configurations are considered in order to determine the worst case for the accident event. For the structural evaluation, the orientations considered were directly in the middle of the secondary lid to maximize the bending loads in the primary and secondary lids and prying forces in the bolts. The second configuration considered the pin impact directly into the side of the cask to ensure that the outer shell would not be punctured by the pin. For the thermal analysis, these two events are also considered to be limiting. The differences are in the location of the pin at impact. For the lid impact, the limiting configuration for the thermal analysis considered a pin puncture through the top impact limiter directly into the secondary lid at the location of the O-ring seals. The model placed a 150 mm (6 in) diameter hole through the upper impact limiter, directly exposing the secondary lid to the thermal environment of the hypothetical accident fire. For the cask sidewall impact, the limiting configuration considered the pin puncturing the thermal shield directly below the lifting block. This increases the area of the outer shell of the cask that is not protected by the thermal shield and maximizes the heat input into the lead.

With these modifications to the normal condition analytical model, the fire transient analyses are performed as described in the following sections.

3.4.1 Initial Conditions

The initial conditions include Proprietary Information. Therefore they are included in Section 3.4.1 of the Safety Analysis Report, Volume II, Proprietary Information.

3.4.2 Fire Test Conditions

The RT-100 cask is evaluated by finite element computer analysis rather than physical testing to demonstrate the performance of the cask in response to the fire test conditions specified in 10 CFR 71.73(c) [Ref. 2]. The evaluation for the effects of the fire test and the evaluation appropriately address the following:

- Fire temperatures and duration
- No artificial cooling is applied to the package after the fire transient
- The package is subjected to full insolation
- The evaluation continues until the post-fire, steady-state condition is achieved
- All combustion is allowed to proceed until it terminates naturally

3.4.2.1 Analytical Model

The analytical model is considered Proprietary Information. It is included in Section 3.4.2.1 of the Safety Analysis Report, Volume II, Proprietary Information.

3.4.2.2 Analysis Results

The analysis results are included in the Safety Analysis Report, Volume II, Proprietary Information, Section 3.4.2.2.

3.4.3 Maximum Temperatures and Pressure

This section summarizes the peak accident condition temperatures of RT-100 components as a function of time both during and after the fire, as well as the maximum temperatures from the post-fire, steady-state condition. This section includes those temperatures at locations in the package that are significant to the safety analysis and review. The calculations of transient temperatures trace the temperature-time history up to and past the time at which maximum temperatures are achieved and begin to fall. The calculations confirm that these temperatures do not exceed their maximum allowable values. It also confirms that lead shielding does not reach melting temperature.

The RT-100 is evaluated structurally for the maximum hypothetical accident condition temperatures and pressures in Section 2.7.4.

3.4.3.1 Maximum Temperatures

Section 3.4.2 presents a summary of the evaluation of the RT-100 for the hypothetical accident condition fire transient. Provide in the summary are figures depicting temperature distributions and time histories as a function of time during and after the fire transient. Maximum temperatures for the various cask components as a result of the hypothetical accident conditions are presented in Table 3.1.3-2.

Of interest in this section is the determination of the maximum internal pressure in the cask cavity as a result of the fire test. As shown in Table 3.1-3, the maximum inner shell temperature during the fire transient is 108°C. The temperature of the cask body components is increased due to the fire transient, with a maximum normal condition inner shell temperature of 73°C as reported in Table 3.1.3-1. Because the temperature of the inner shell of the cask is raised by 35°C as a result of the fire transient and because the maximum internal decay heat of the contents is only 200 watts, it is conservative to assume that the cavity temperatures are bounded by the average inner shell temperatures. For conservatism, the inner shell can be assumed to be at 150°C for the pressure calculations presented in Section 3.4.3.2.

As previously discussed, the primary components of interest during the fire transient from a temperature standpoint are the lead gamma shielding and the O-ring seals in the primary and secondary lids. As described in detail in Section 3.4.2, the lead an O-ring materials do not exceed their allowable, and in fact have safety margins of more than 25°C below their maximum allowable temperatures. The temperature distributions within the cask as a result of the

hypothetical accident condition fire transient are fully considered in the structural evaluation of the cask presented in Section 2.7.4.

3.4.3.2 Maximum Accident Condition Pressure

The evaluation of the maximum pressure in the RT-100 Cask Package is based on the maximum normal operating pressure, and considers fire-induced increases in package temperatures, thermal combustion or decomposition processes, fuel rod failure (not applicable), phase changes, etc. RT verifies that the value of this maximum pressure is consistent with that in the Structural Evaluation and Containment sections.

Similar to the calculation of the maximum normal operating pressure in Section 3.3.2, the maximum accident condition pressure is calculated using bounding assumptions for the temperatures in the cask as a result of the hypothetical accident condition fire transient.

The maximum pressure is the sum of three components:

1. The pressure due to the initially sealed air in the cavity
2. The pressure due to water vapor in the cask
3. The pressure due to the hydrogen and oxygen gases generated by radiolysis

The following sections present a summary of the maximum accident condition pressure calculation. Details of the calculation are provided in Cask Hypothetical Accident Condition Maximum Pressure Calculation Package TH-0202 [Ref. 7].

3.4.3.2.1 Calculation Method

The internal cavity pressure due to accident condition temperatures is determined using the same method used to calculate the maximum normal condition pressure in Section 3.3.2. The method presented below is equal to that used previously, with the maximum normal operating pressure and internal temperatures used along with the maximum internal temperature determined in Section 3.4.3.1 to calculate the maximum accident condition pressure.

3.4.3.2.2 Pressure Due to the Initially Sealed Air in the Cavity

Per the ideal gas law, the partial pressure of the air (P_{air}) initially sealed in the fixed volume of the cask at the ambient temperature as it is heated to 150 °C is:

$P_1 \times T_2 = P_2 \times T_1$

P_{air} = 101.35 kPa[(423.15 K) / (294.25 K)] = 145.8 kPa (21.15 psia)

3.4.3.2.3 Pressure Due to the Water Vapor in the Cask

The cask cavity is assumed to contain a small amount of water. By conservatively assuming a condensing surface temperature of 150 °C, the water vapor pressure, P_{wv}, at this temperature is 476 kPa [69 psia]

Adding the water vapor pressure at 150 °C to the partial pressure of the air in the sealed cask at this temperature gives:

$P_2 = P_{air} + P_{wv} = 145.8 + 476 = 621.8$ kPa [90.18 psia]

3.4.3.2.4 Pressure Due to Generation of Gas

Solidified or dewatered material may contain some water. Therefore, radiolytic generation of gases from this water could occur. Hydrogen and oxygen may be produced in the cask by radiolytic decomposition of residual water in the cask contents. As described in Section 1.2, the maximum quantity of hydrogen must be limited to less than 5% to ensure that an explosive quantity does not accumulate.

For conservatism, the cask atmosphere can be assumed to contain 5% of hydrogen (H_2) gas due to radiolysis of the water. By stoichiometry of the water molecule (H_2O), the cask atmosphere will also contain 2.5% oxygen (O_2) gas generated by radiolysis. Partial pressures in an ideal gas mixture are additive and behave the same as ideal gas volume fraction or mole fractions. Therefore, the partial pressure of hydrogen is described by the following equation:

$P_{H2} = 0.05\ P_{pt}$

Where, $P_{pt} = P_{air} + P_{wv} + P_{H2} + P_{O2}$

Combining $P_{air} + P_{wv} = P_2$ and noting that $P_{O2} = 0.5 \times P_{H2}$.

$P_{H2} = 0.05 \times (P_2 + 1.5\ P_{H2})$

Solving the equation explicitly for P_{H2} gives:

$$\begin{aligned} P_{H2} &= [0.05\ P_2] / [1 - 0.05\ (1.5)] \\ &= [0.05 * 621.8\ \text{kPa}] / [1 - 0.05\ (1.5)] \\ &= 33.61\ \text{kPa [4.87 psia]} \end{aligned}$$

3.4.3.2.5 Total Pressure

Based on the stoichiometric relationship between hydrogen and oxygen liberated by radiolysis of water, and again combining the pressure of the initially sealed air and water vapor as P_2, the total pressure in the cask at 150 °C is:

$$P_{Total} = P_2 + 1.5\ P_{H2}$$
$$= 621.8\ \text{kPa} + 1.5 * 33.61\ \text{kPa}$$
$$= 672.2\ \text{kPa}\ [97.47\ \text{psia}]$$

The maximum pressure is 672.2 kPa [97.47 psia] under hypothetical accident condition. For conservatism, the maximum accident pressure is assumed to be 689.4 kPa [100 psia] for the structural analyses presented in Section 2.7.4.

3.4.4 Maximum Thermal Stress

The RT-100 cask is evaluated for the stresses produced by the temperatures gradients in the csk body that result from exposure of the cask to the hypothetical accident condition fire transient. This evaluation, which utilizes the temperature distributions resulting from the fire accident as described in Section 3.4.3, is presented in detail in Section 2.7.4.

3.4.5 Accident Conditions for Fissile Material Packages for Air Transport

This Section is NOT APPLICABLE. The RT-100 Cask Package will not be used for fissile material air transport.

3.5 References

1. Robatel Technologies, LLC, Quality Assurance Program for Packaging and Transportation of Radioactive Material, 10 CFR 71 Subpart H, Dated January 31, 2012 and NRC Approved on March 21, 2012
2. U.S. Nuclear Regulatory Commission, 10 CFR Part 71--PACKAGING AND TRANSPORTATION OF RADIOACTIVE MATERIAL, dated March 7, 2012 and the following specific Sections:

71.31(a)(1)	71.31(a)(2)	71.33	71.35(a)
71.31(c)	71.71	71.73	71.41(a)
71.43(f)	71.51(a)(1)	71.43(g)	71.51(c)
71.73(c)	71.73(c)(4)		

3. ANSYS, Release 14.0, ANSYS, Inc., Canonsburg, PA, October, 2011
4. ENERCON Services Calculation RTL-001-CALC-TH-0201, Rev. 1, RT-100 Cask Thermal Analyses – Proprietary Information
5. Fundamentals of Heat and Mass Transfer, Frank P. Incropera, David P. DeWitt, 2002, 5th ed., John Wiley & Sons, Inc.
6. ENERCON Services Calculation, "RTL-001-CALC-TH-0102, Rev. 1, RT-100 Cask Maximum Normal Operating Pressure Calculation" – Proprietary Information
7. ENERCON Services Calculation, "RTL-001-CALC-TH-0202, Rev. 1, RT-100 Cask-Hypothetical Accident Condition Maximum Pressure Calculation" – Proprietary Information
8. TRELLEBORG Sealing Solutions O-Ring and Backup Rings Catalog, August 2011 Edition
9. UNIFRAX Fiberfrax 970 Ceramic Paper Data Sheet
10. FR-3720 GENERAL PLASTICS Rigid Polyurethane Foam Cut Sheet
11. FR-3740 GENERAL PLASTICS Rigid Polyurethane Foam Cut Sheet
12. FR-3705 GENERAL PLASTICS Rigid Polyurethane Foam Cut Sheet
13. ASME Boiler & Pressure Vessel Code, 2007, Section II, Part D, Materials, The American Society of Mechanical Engineers, New York, NY, 2007
14. Sanghavi Bothra Engineering Co. Pvt. Ltd.(SBE) 304/304L Stainless Steel Product Mechanical and Physical Properties
15. GENERAL PLASTICS Design Guide for LAST-A-FOAM FR-3700 Crash & Fire Protection of Radioactive Material Shipping Containers, Rev. 02.20.12
16. PARKER O-RING Handbook ORD 5700

3.6 Appendix 3

Appendix 3.6-1 EPDM Temperature Specifications [Ref. 16]

Temperature capabilities of principle elastomer employed in seals.

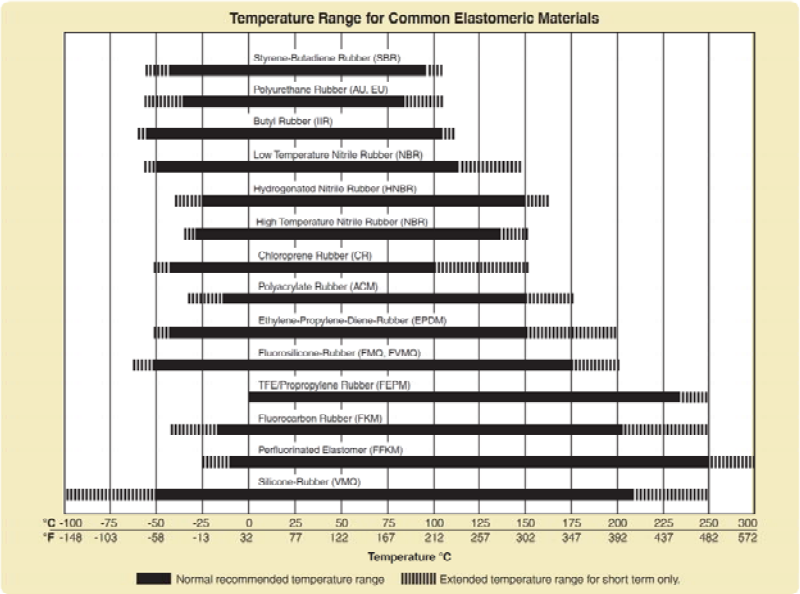

4 CONTAINMENT

Chapter 4 describes the RT 100 containment under the RT Company Quality Assurance Program [Ref. 1] and summarizes the results to demonstrate compliance with the structural requirements of 10 CFR Part 71[Ref. 2]. This Chapter also demonstrates the RT-100 containment boundary compliance with the permitted activity release limits specified in 10 CFR Part 71, 71.51(a)(1) [Ref. 2]and 71.51(a)(2) [Ref. 2]for both normal conditions (NCT) and hypothetical accident conditions (HAC) of transport. The reference leakage rates for various cask conditions are calculated, and the most bounding value is chosen as the maximum allowable leakage rate for the cask in order to ensure compliance with regulatory limits.

A general description of the RT-100 cask is provided in Section 1.2.1. The containment system features of the cask are as described in the following sections. Also described are the methods of evaluation for the RT-100 containment compliance. It is shown that the reference leakage rate for the RT-100 cask is 6.154E-06 ref-cm^3/sec, and that the release limits specified in 10CFR71.51(a)(1) [Ref. 2] are met by limiting the release of the RT-100 to less than this value.

The containment review is based in part on the descriptions and evaluations presented in the General Information, Structural Evaluation and Thermal Evaluation sections of the application. Similarly, results of the containment review are considered in the review of Operating Procedures and Acceptance Tests and Maintenance Program. An example of the information flow for the containment review is shown in Figure 4-1 on the following page.

4.1 Description of Containment System

Section 4.1 provides a detailed description of the containment system. This description includes the containment vessel, welds, seals, lids, cover plates, valves, and other closure devices relevant to the containment boundary of the cask. Materials of construction and applicable codes and standards are presented in the Bill of Materials (Appendix 1-1 of Volume II, Proprietary Volume).

4.1.1 Containment Vessel

The package containment system is defined as the inner shell of the shielded transport cask, together with the associated lid, O-ring seals, and lid closure bolts. The inner shell of the cask or containment vessel consists of a right circular cylinder of 1730 mm inner diameter and 1956 mm inside height. The shell is fabricated of stainless steel. At the base, the cylindrical shell is attached to a circular forged bottom with full penetration weld. At the top, the inner shell is attached to a circular forged flange with a full penetration weld. The primary lid is attached to the cask body with thirty-two (32) equally spaced M48 hex head bolts. A secondary lid covers an

opening in the primary lid and is attached to the primary lid using eighteen (18) equally spaced M36 hex head bolts. See Section 4.1.4 for closure details.

Figure 4-1 Information Flow for the Containment Review

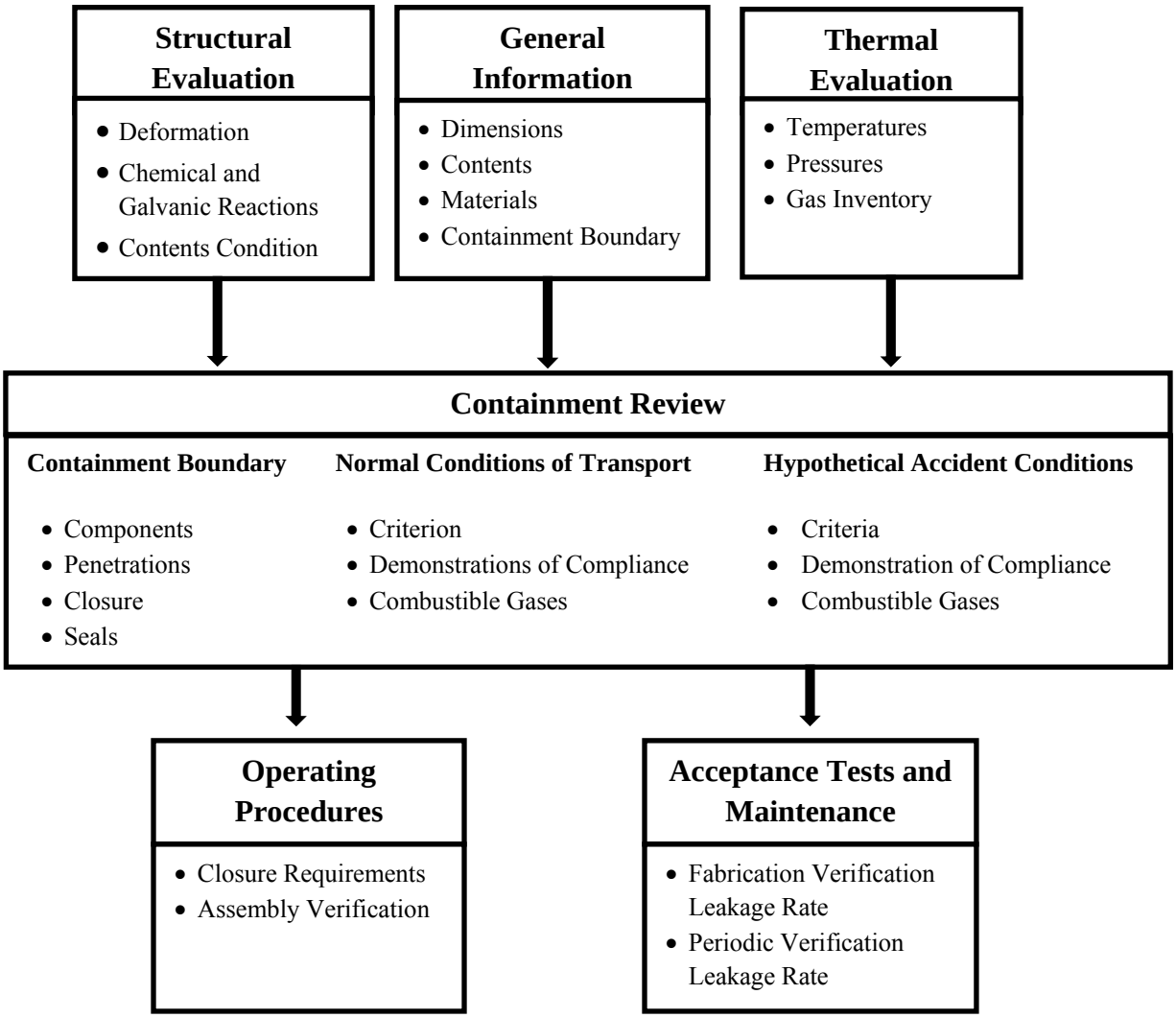

4.1.2 Containment Penetration

There are three penetrations of the containment vessel. These penetrations form the containment boundary and include the following locations:

- The primary lid inner O-ring
- The secondary lid inner O-ring
- The cask vent port cover plate inner O-ring

A vent port penetrates the primary lid into the main cask cavity. The vent penetration contains a quick disconnect valve disconnect style connector and is sealed with the vent port cover plate. The primary lid, secondary lid and the cover plate are sealed with EPDM O-rings. The two figures below, Figure 4.1.2-1 and 4.1.2-2, illustrate the containment boundaries of the RT-100 (in red) on the following page. The RT-100 does not rely on any valve or pressure relief device to meet the containment requirements. The quick disconnect valve is protected by the vent port cover plate which protects the valve from unauthorized operation and provides a sealed enclosure to retain any leakage from the device.

Figure 4.1.2-1 Illustration of Overall Containment Boundary

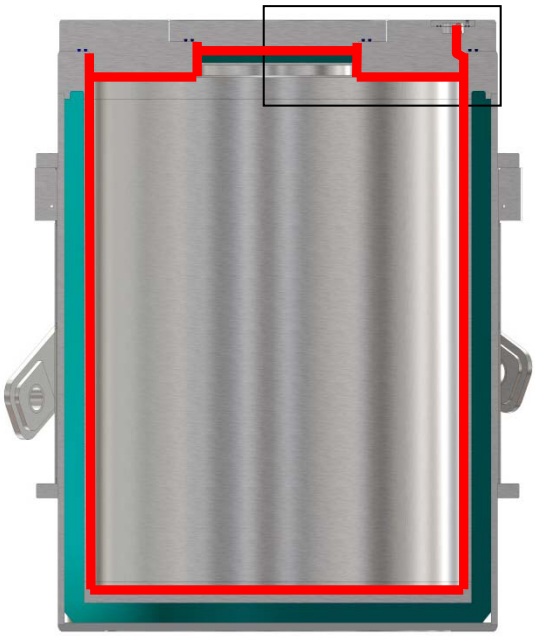

Figure 4.1.2-2 Illustration of Lid Containment Boundary

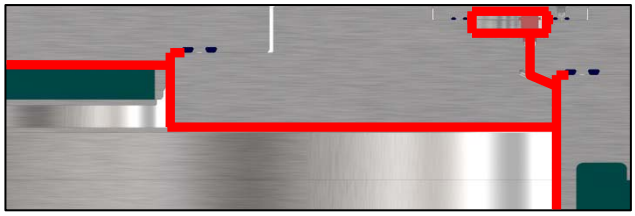

4.1.3 Welds and Seals

The containment vessel is fabricated using full penetration welds. Lid seals are EPDM O-rings and are further addressed in Section 4.1.4.

4.1.4 Closure

The primary lid closure consists of a partially recessed, 211 mm-thick stainless steel plate. The lid is supported at the perimeter of the cylindrical body by a thick flange (upper forging) which is welded to the top of the inner and outer cylindrical shells. The lid is attached to the cask body by thirty-two (32) equally spaced M48 hex head bolts. Two (2) EPDM O-rings are retained in machined grooves at the lid perimeter. Groove dimensions prevent over-compression of the O-rings by the closure bolt pre-load forces and hypothetical accident impact forces. The cask is fitted with a recessed secondary lid which of consists of 100 mm thick plate, a 60 mm thick lead gamma shield, and 10 mm thick closure plate. This lid is attached to the primary lid with eighteen (18) equally spaced M36 hex head bolts. The secondary lid is also sealed with two (2) EPDM O-rings in machined grooves. The torque requirements for these bolts may be seen below. Due to this closure setup, continuous venting from the cask is precluded.

As stated above, the containment system is sealed by multiple bolted closures. These closures contain numerous bolts that are required to be tightened to specified torques using approved procedures during the cask loading process. Secure closure is assured by the torque values specified and the assembly verification leak test performed prior to transport. The torques are specified in order to ensure that sufficient pre-load is applied to the bolts so that they will withstand loads from the maximum normal and accident condition pressures within the cavity.

Table 4.1.4-1 Bolt and Cap Screw Torque Requirements

Location	Size	Torque Values (N-m) ± 10% Lubricated
Primary Lid	M48	850
Secondary Lid	M36	350

4.2 Containment Under Normal Conditions of Transport

The RT-100 package is designed, fabricated, and leak tested to preclude release of radioactive materials in excess of the limits prescribed in 10 CFR71.51 (a)(1) [Ref. 2] The contents of this cask consist of resin beads and filters from nuclear power plant operations. Their total activity is limited to a maximum of 3000 A_2 based on regulatory limits. This is a conservative activity limit, as the cask's activity content will always be less than this value (as demonstrated). This activity limit includes significant daughter products of the isotopes that could be present in the cask. For the purposes of this calculation, the cask contents are treated as powdered solids which could become aerosolized.

In this Section and Section 4.3 below, the maximum permitted reference leakage rates (as defined in ANSI N14.5-1997 [2]) [Ref. 3] for normal and hypothetical accident conditions are calculated, and the most restrictive of these (i.e. the smallest leakage rate permitted) is taken as the reference leakage rate for the RT-100 cask and the basis for the acceptance criteria for leak testing. It is shown that the reference leakage rate for the RT-100 cask is 6.154E-06 ref-cm^3/sec /sec, and that the release limits specified in 10 CFR 71.51(a)(1) [Ref. 2]are met by limiting the release of the RT-100 to less than this value.

4.2.1 Maximum Permitted Leakage Rate

Section 4.2.1 provides the calculation of the maximum permitted leakage rate under normal conditions of transport (NCT) the RT-100 package. Requirement 10CFR71.51(a)(1) [Ref. 2] states that the containment requirements for normal conditions of transport are:

…no loss or dispersal of radioactive contents, as demonstrated to a sensitivity of 10^{-6} A_2 per hour, no significant increase in external radiation levels, and no substantial reduction in the effectiveness of the packaging.

ANSI N14.5-1997 states that the permissible leak rate shall be determined by equation below:

$$L_N = \frac{R_N}{C_N} \text{ or } L_A = \frac{R_A}{C_A}$$

where:

L_N or L_A is the allowable leakage rate at the upstream pressure for normal (N) or accident (A) conditions [cm^3/s],

R_N or R_A is the allowable release rate for normal (N) or accident (A) conditions [Ci/s], and

C_N or C_A is the total source term activity concentration for normal (N) or accident (A) conditions [Ci/cm^3].

For normal conditions of transport:

$$R_N = A_2 \cdot 10^{-6} \cdot \frac{1}{hr} \rightarrow 2.78 \times 10^{-10} \frac{A_2}{sec}$$

Based on the dimensions of the cask:

L_{cavity} = 77.2 in = 196 cm
D_{cavity} = 68.1 in = 173 cm

The calculated leakage rate for each transport condition assumes a 25% void volume in the storage cavity. This value is chosen due to its conservative nature, since the random close packing fraction for uniform spheres is 0.64 [Ref. 5]. The resin beads in this cask are assumed to be uniform spheres. Therefore,

$$V_{cavity} = \frac{(0.25) \cdot \pi \cdot D_{cavity}^2 \cdot L_{cavity}}{4} \rightarrow V_{cavity} = 1.15 \times 10^6 \text{ cm}^3$$

In Section 4.2.2 below, the maximum permitted volumetric leakage rate under normal conditions of transport is calculated and then converted into a reference leakage rate.

4.2.2 Containment Under Normal Conditions of Transport

Structural performance of the containment system is evaluated in Section 2.6. Leak test requirements are further specified in Chapters 7, 8. Section 4.2.2 demonstrates that there is no release or dispersal of radioactive material under normal conditions of transport to the required sensitivity for Type B packages. (Note: evaluation does not include Type A fissile as the RT-100 application does not seek licensing for fissile material.)

The following calculation follows the methodology described in NUREG/CR-6487 [Ref 4].

C_N = concentration of releasable material during normal conditions of transport, C_i/cm^3

ρ = density of powder aerosol, g/cm^3

$\rho = 1 \times 10^{-6}$ g/cm^3 from NUREG/CR-6487 page 12, Section 3.3

Since the RT-100 cavity void volume is 1.15×10^6 g/cm^3, the total aerosol mass (M) in the 25% void region of the cask is 1.15 grams.

The specific activity (S_A) = 3000 A_2/1.15 grams = 2609 A_2/gram*(ARF)*(RF) = 2609 A_2/gram*(.0078) = 20.35 A_2/gram, where:

ARF is the Airborne Release Fraction, or the coefficient used to estimate the amount of a radioactive material that can be suspended in air and made available for airborne transport under a specific set of induced physical stresses [Ref. 6]. The ARF value for this calculation is 0.0078 [Ref. 6, Table 5-5] "Measured ARFs and RF from Burning of Contaminated Polystyrene." Conservatively, the value of 0.0078 is the maximum measured value.

RF is the Respirable Fraction, which has a value of 0.90 for the release [Ref. 6, Table 5-5]. This value is conservatively set to 1.0 for this containment calculation.

These parameters provide a bounding value for the fraction of escapable and respirable particles, and this value is then multiplied by the maximum theoretical specific activity. Thus, a specific activity of 20.35 A_2/gram represents the worst-case scenario for an airborne release—that is, if the resin particles are combusted and released through the leakage hole in the cask. This scenario yields a conservative value for the cask leakage rate, since it is unlikely that combustion will be the form of airborne release in a sealed cask.

$C_N = S_A \cdot \rho$

Using Equation 4.1,

$L_N = \frac{R_N}{C_N} = 1.37\times 10^{-5}\ cm^3/sec$ **Maximum permitted volumetric leakage rate, normal conditions**

Next, determine the reference leakage rate under normal conditions (L_{RN}) for a volumetric leakage rate L_N:

$\mu_{air} = 0.0209$ cP $M_{air} = 29.0$ g/mol

a = .49 cm assumed length for hole leaking air (equals O-ring diameter of the vent port cover plate)

For normal conditions of transport:

$T_N = 80°C = 176°F$ MNOP = P_{u_N}= 35 psig = 3.38 atm [Ref. 8]

P_{u_N}= 1.0 atm [6]

$P_{a_N} = \frac{P_{u_N}+P_{d_N}}{2}$ $P_{a_N} = 2.19$ atm

Using Equations B.3, B.4, and B.5 in ANSI N14.5-1997, determine the diameter of a hole, D_{max1}, that would leak L_N:

$L_N = 1.37\times 10^{-5}\ cm^3/sec$, from above.

$F_{cn}(D_{max}) = \frac{2.49\cdot 10^6\cdot (D_{max})^4}{a\cdot \mu_{air}}$ Equation B.3 from ANSI N14.5-1997

$F_{mn}(D_{max}) = \frac{3.8\cdot 10^3\cdot (D_{max})^3\sqrt{\frac{T_N}{M_{air}}}}{a\cdot P_{a_N}}$ Equation B.4 from ANSI N14.5-1997

Use Equation B.5 from ANSI N14.5-1997. Let D_{max1} represent the diameter of the hole that will leak L_N:

Solve for D_{max1}:

$$L(D_{max1}) = [(F_{cn}(D_{max1}) + F_{mn}(D_{max1}))\cdot(P_{u_N} - P_{d_N})\cdot\frac{P_{a_N}}{P_{u_N}}] - L_N$$

$D_{max1} = 4.25\times 10^{-4}$ cm

Now calculate L_{RN} based on D_{max1}. At standard conditions:

$T_N = 25°C = 77°F$

$P_{u_S} = 1.0$ atm

$P_{d_S} = 0.1$ atm

$P_{a_S} = 0.55$ atm

Equations B.3, B.4, and B.5 at standard conditions become:

$$F_{mstd}(D_{max}) = \frac{3.8\cdot 10^3\cdot(D_{max})^3\sqrt{\frac{T_S}{M_{air}}}}{a\cdot P_{a_S}} \quad \text{and}$$

$$F_{cstd}(D_{max}) = \frac{2.49\cdot 10^6\cdot(D_{max})^4}{a\cdot \mu_{air}}$$

Therefore, Equation B.5 at standard conditions and a hole diameter D_{max1} is:

$L_{RN}(D_{max1}) = (F_{cstd}(D_{max1}) + F_{mstd}(D_{max1}))\cdot(P_{u_S} - P_{d_S})\cdot\frac{P_{a_S}}{P_{u_S}}$ Equation B.5 from ANSI N14.5-1997.

Thus,

$L_{RN} = 5.952 \times 10^{-6}$ cm^3/sec **Standard leakage rate under normal conditions.**

4.3 Containment Under Hypothetical Accident Conditions of Transport

Structural performance of the containment system is evaluated in Chapter 2. This Section evaluates the containment system under hypothetical accident conditions considering the factors given in Section 4.2. The evaluation contained herein demonstrates that the package meets the containment requirements of 10 CFR 71.51(a)(2) [Ref. 2]under hypothetical accident conditions.

The maximum permitted leakage rates under hypothetical accident conditions are calculated for the RT-100 package. 10 CFR 71(a)(2) [Ref. 2] states that the containment requirements for hypothetical accident conditions are:

…no escape of krypton-85 exceeding $10A_2$ in 1 week, no escape of other radioactive material exceeding a total amount A_2 in 1 week, and no eternal radiation dose rate exceeding 10mSv/h (1 rem/h) at 1 m (40 in) from the external surface of the package.

Following the methodology from Section 4.2.2 above, the maximum permitted leakage rate under hypothetical accident conditions is calculated (L_A). Then, the reference leakage rate corresponding to this permitted rate is calculated.

In section 4.4, all leakage rates for normal and accident conditions of transport are compared to determine the most restrictive, yielding the reference air leakage rate for the RT-100 package.

$R_A = 1\ A_2/\text{week} \rightarrow 1.65 \times 10^{-6} \frac{A_2}{\text{sec}}$

Use the same parameters as in section 4.2.2:

C_A = concentration of releasable materials during hypothetical accident conditions, C_i/cm^3
$C_A = C_N$

$L_A = \frac{R_A}{C_A} = 0.0811\ cm^3/sec$ **Volumetric leakage rate under hypothetical accident conditions.**

Next, determine the reference leakage rate, L_{RA}, for a volumetric leakage rate L_A.

For hypothetical accident conditions of transport:

$\mu_{air} = 0.0239$ cP $M_{air} = 29.0$ g/mol

a = .49 cm assumed length for hole leaking air (equals o-ring diameter of vent port cover plate)

$T_A = 150°C = 302°F$ HACP = $P_{u_A} = 85.3$ psig = 6.8 atm [Ref. 9]

$P_{d_A} = 1.0$ atm

$$P_{a_A} = \frac{P_{u_A}+P_{d_A}}{2} \qquad P_{a_A} = 3.9 \text{ atm}$$

Equations B.3 and B.4 at accident conditions are as follows:

$$F_{cA}(D_{max}) = \frac{2.49\cdot 10^6\cdot (D_{max})^4}{a\cdot \mu_{air}}$$ Equation B.3 from ANSI N14.5-1997

$$F_{mA}(D_{max}) = \frac{3.8\cdot 10^3\cdot (D_{max})^3 \sqrt{\frac{T_A}{M_{air}}}}{a\cdot P_{a_A}}$$ Equation B.4 from ANSI N14.5-1997

Let D_{max3} represent the diameter of a hole that will leak L_A:

$L_A = 0.0811 \text{ cm}^3/\text{sec}$

$$L(D_{max3}) = [(F_{cA}(D_{max3}) + F_{mA}(D_{max3}))\cdot(P_{u_A} - P_{d_A})\cdot\frac{P_{a_A}}{P_{u_A}}] - L_A$$

Solve for D_{max3}:

$D_{max3} = 3.26 \times 10^{-3}$ cm

Substitute this value of D_{max3} into Equation B.3 at standard conditions:

$$L_{RA}(D_{max3}) = (F_{cstd}(D_{max3}) + F_{mstd}(D_{max3}))\cdot(P_{u_S} - P_{d_S})\cdot\frac{P_{a_S}}{P_{u_S}}$$

$L_{RA}(D_{max3}) = 0.01619 \text{ cm}^3/\text{sec}$ **Standard leakage rate under hypothetical accident conditions.**

The following table summarizes the results in Sections 4.2 and 4.3 above:

Table 4.3-1 Standard Leakage Rates for Air

Standard Leakage Rate [ref-cm^3/sec]		Sensitivity [ref-cm^3/sec]	
Normal	Accident	Normal	Accident
6.154E-06	1.619E-02	3.077E-06	8.093E-03

Therefore, the most restrictive leakage rate for the RT-100 cask is 6.154×10^{-6} ref-cm^3/sec. This is chosen as the maximum allowable leakage rate to ensure regulatory compliance. As long as the cask meets this leakage rate, regulatory compliance is ensured.

4.4 Leakage Rate Test for Type B Packages

This Section describes the leakage tests used to show that the package meets the containment requirements of 10 CFR 71.51 [Ref. 2]. Leak test requirements are further specified in Section 7.5

The following leakage tests are conducted on the RT-100 package as required by ANSI N14.5 [Ref. 3]:

Table 4.4-1 Leakage Tests of the RT-100 Package

Test	Frequency	Test Gas	Acceptance Criteria
Maintenance	After maintenance, repair (such as weld repair), or replacement of components of the containment system	Helium	$\leq L_{He}^{*}$
Fabrication	Prior to the first use of the RT-100		
Periodic	Within 12 months prior to next shipment		
Pre-Shipment	Before each shipment, after the contents are loaded and the package is closed	Nitrogen or air (optional)	Sensitivity $\leq 10^{-3}$ ref-cm^3/sec

*Adjusted for the individual properties of the test gas (calculated below); sensitivity is $\leq L_{He}/2$

As shown in Table 4.4-1, the Maintenance, Fabrication, and Periodic leakage tests may be performed using helium as the test gas. The acceptance criterion for these tests is the equivalent reference leakage rate for helium gas, L_{He}, which is calculated below.

4.4.1 Determination of Equivalent Reference Leakage Rate for Helium Gas

This section determines the allowable leakage rate using the Helium gas which may be used to perform the annual verification leakage tests summarized in Table 4.4-1 above. This calculation uses formulas presented in ANSI N14.5 [Ref. 3].

It is known that the reference air leakage rate, L_R, is 6.154×10^{-6} ref-cm^3/sec as calculated previously. The maximum diameter hole through the O-ring corresponding to this leakage rate, D_{max1}, is 4.25×10^{-4} cm. So,

$L_R = 6.154 \times 10^{-6}$ ref-cm^3/sec $\qquad D_{max1} = D_{max} = 4.25\times 10^{-4}$ cm

The equivalent air/helium mixture that would leak from D_{max} during a leak test as described in Table 4.4-1 is determined. Assume the cask void is evacuated to 0.3 atm and then pressurized to 1.1 atm with an air/helium mixture.

$P_{void} = P_{air} = 0.3$ atm

$P_{mix} = 1.1$ atm

$P_{He} = P_{mix} - P_{air} = 0.8$ atm

The downstream pressure, P_d, under standard conditions is 0.01 atm.

$P_a = 0.5 \times (P_{mix} + P_d) \rightarrow P_a = 0.405$ atm

From ANSI N14.5- 1997:

$M_{He} = 4.0$ g/mol $M_{air} = 29.0$ g/mol

$\mu_{He} = 0.0198$ cP $\mu_{air} = 0.0185$ cP

The mass of the mixture of air/helium gases is then determined:

$$M_{mix} = \frac{M_{He}P_{He} + M_{air}P_{air}}{P_{mix}} \rightarrow M_{mix} = 10.82 \text{ g/mol} \qquad \text{Eqn. B7- ANSI N14.5}$$

$$\mu_{mix} = \frac{\mu_{He}P_{He} + \mu_{air}P_{air}}{P_{mix}} \rightarrow \mu_{mix} = 0.0194 \text{ cP} \qquad \text{Eqn. B8- ANSI N14.5}$$

Determine L_{mix} as a function of temperature. Assume that the viscosities of air and helium do not change significantly over the range of temperatures evaluated.

Temperature range for test = T = 273-328 K, or equivalently 32°F to 130°F.

$$F_c(D_{max}) = \frac{2.49 \cdot 10^6 \cdot (D_{max})^4}{a \cdot \mu_{mix}} \quad \text{Equation B.3 from ANSI N14.5-1997}$$

$$F_m(T) = \frac{3.81 \cdot 10^3 \cdot (D_{max})^3 \sqrt{\frac{T}{M_{mix}}}}{a \cdot P_a} \quad \text{Equation B.4 from ANSI N14.5-1997}$$

$$L_{mix}(T) = (F_c + F_m(T)) \cdot (P_{mix} - P_d) \cdot \frac{P_a}{P_{mix}} \qquad \text{Equation B.5 from ANSI N14.5-1997}$$

Convert the test temperature to Fahrenheit: $T_F(T) = [(T - 273)\cdot\frac{9}{5} + 32]$ °F

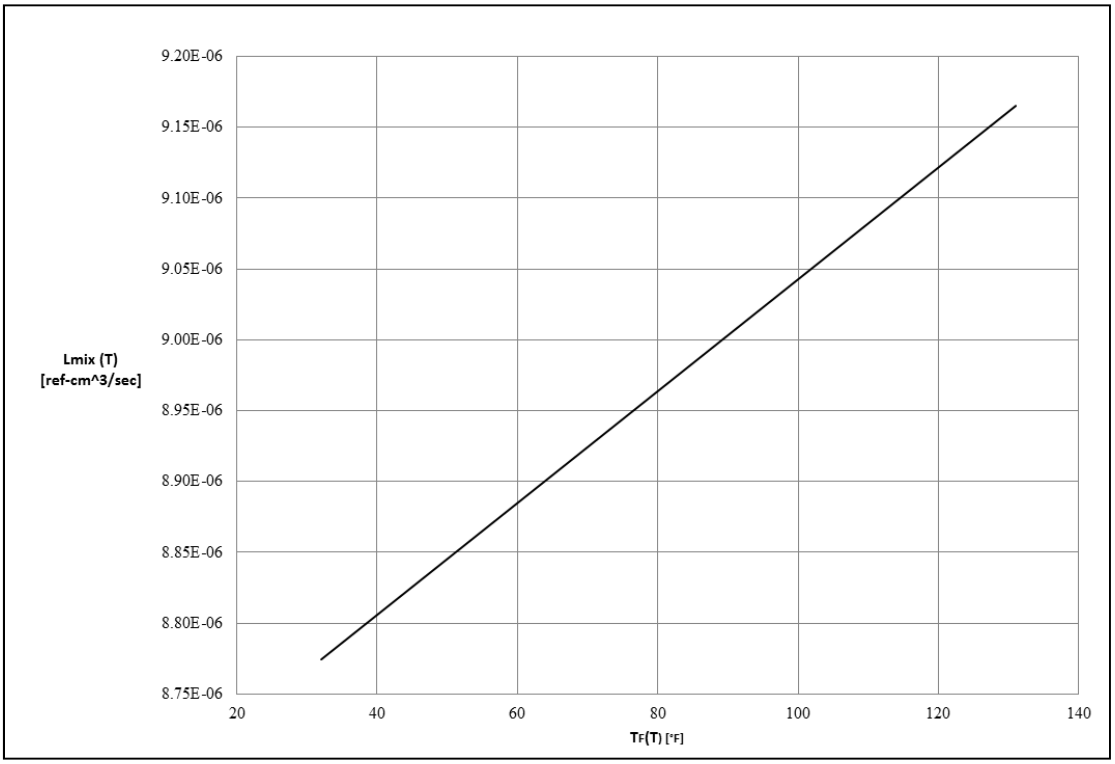

Figure 4.4.1-1 Allowable Air/Helium Mixture Test Leakage Rate, cm^3/sec Versus Air Temperature, °F

The helium component of this leak rate is determined by multiplying the leak rate of the mixture by the ratio of the helium partial pressure to the total mix pressure.

$$L_{He}(T) = L_{mix}(T) \cdot \frac{P_{He}}{P_{mix}}$$

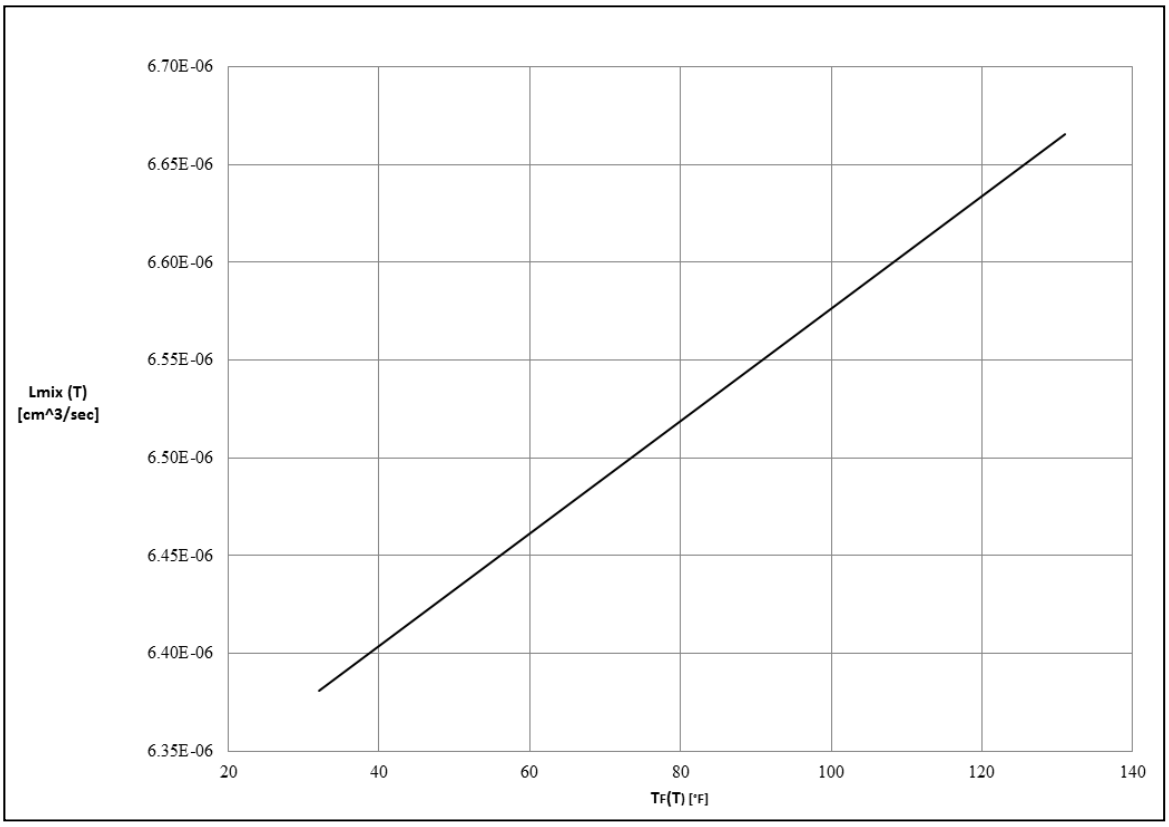

Figure 4.4.1-2 Allowable Helium Test Leakage Rate, cm^3/sec versus air temperature, °F

Figure 4.4.1-2 should be used to determine the allowable leak rate, L_{He}, for the maintenance, fabrication, and periodic leak tests of the RT-100 package.

4.5 References

1. Robatel Technologies, LLC, Quality Assurance Program for Packaging and Transportation of Radioactive Material, 10 CFR 71 Subpart H, Dated January 31, 2012 and NRC Approved on March 21, 2012

2. U.S. Nuclear Regulatory Commission, 10 CFR Part 71--PACKAGING AND TRANSPORTATION OF RADIOACTIVE MATERIAL, dated March 7, 2012 and the following specific Sections:

71.31(a)(1)	71.31(a)(2)	71.33	71.35(a)
71.31(c)	71.43(c)	71.73(d)	71.4(e)
71.71	71.43(f)	71.51(a)(1)	71.43(h)
71.51(a)(2)	71.51	71.63	71.63(b)
71.51(a)(1)	71.51(a)(2)	71.73	

3. American National Standards Institute, ANSI N14.5-1997, "American National Standard for Radioactive Materials–Leakage Tests on Packages for Shipment," New York.

4. U.S. Nuclear Regulatory Commission, "Containment Analysis for Type B Packages Used to Transport Various Contents," NUREG/CR-6487, November 1996.

5. "Particle-size distribution and packing fraction of geometric random packings." H. J. H. Brouwers, Physical Review E 74, 031309, 2006.

6. DOE Handbook, *Airborne Release Fractions/Rates and Respirable Fractions for Nonreactor Nuclear Facilities*, "Volume I - Analysis of Experimental Data," U.S. Department of Energy, Washington, D.C., 1994.

7. NUREG/CR-6487, UCRL-ID-124822, *Containment Analysis for Type B Packages Used to Transport Various Contents,* B.L. Anderson et al., Lawrence Livermore National Laboratory, November 1996.

8. RTL-001-CALC-TH-0102, Rev. 0, "RT-100 Cask Maximum Normal Operating Pressure Calculation."

9. RTL-001-CALC-TH-0202, Rev. 0, "RT-100 Cask Hypothetical Accident Condition Maximum Pressure Calculation."

5 SHIELDING EVALUATION

This Chapter describes the RT 100 shielding evaluation under the RT Company Quality Assurance Program [Ref. 1] and summarizes the results to demonstrate compliance with the structural requirements of 10 CFR Part 71[Ref. 2]. This Chapter describes the shielding design for the RT-100 Cask Package. The RT-100 cask package is design to transport contaminated resin and filter media from nuclear power plant operation. The RT-100 Cask Package has a robust gamma shielding design comprising a steel/lead/steel body with a steel primary lid and a steel/lead/steel secondary lid. The primary lid is bolted onto the body, and the secondary lid is bolted into the primary lid. Both lids, along with their O-ring seals provide a secure boundary to the radioactive material contents. Analyses presented in this chapter demonstrate that the shield design produces dose rates is well below the external radiation requirements of 10 CFR Part 71 under Normal Conditions of Transport (NCT) and Hypothetical Accident Conditions (HAC). This is accomplished by limiting the loaded activity of individual nuclides on a Ci/gram basis.

The RT-100 Cask Package design is well below the dose rate regulatory requirements of 10 CFR Part 71 as follows:

- The RT-100 Cask Package design is described and evaluated to demonstrate that it meets the shielding requirements of 10 CFR Part 71 Sections 71.31(a)(1), 71.31(a)(2), 71.33, and 71.35(a) [All Ref. 2].
- The application must identifies the established codes and standards used for the shielding design according to 10 CFR Part 71 Section 71.31(c) [Ref. 2].
- The RT-100 Cask Package is designed, constructed, and prepared for shipment so that the external radiation levels will not significantly increase under the tests specified in 10 CFR Part 71 Section 71.71 [Ref. 2](normal conditions of transport) and in accordance with 10 CFR Part 71 Sections71.43(f) [Ref. 2], and 71.51(a)(1) [Ref. 2].
- Under the tests specified in 10 CFR Part 71 Section 71.71 [Ref.2] (normal conditions of transport), the external radiation levels meets the requirements of 10 CFR Part 71 Section 71.47(b) [Ref. 2] for exclusive-use shipments and in accordance with 10 CFR Part 71 Section 71.47 [Ref. 2].
- Under the tests specified in 10 CFR Part 71 Section 71.73 [Ref.2] (hypothetical accident conditions), the external radiation level does not exceed 10 mSv/h (1 rem/h) at one meter from the surface of the package in accordance with 10 CFR Part 71 Section 71.51(a)(2) [Ref. 2].

The shielding review is based in part on the descriptions and evaluations presented in the General Information, Structural Evaluation and Thermal Evaluation sections of the application. Results of the shielding review are considered in the review of Operating Procedures and the Acceptance Tests and Maintenance Program. Similarly, results of the shielding review are

considered in the review of several other sections of the application. An example of information flow for the shielding review is shown in Figure 5-1 on the following page.

Figure 5-1 Information Flow for the Shielding Review

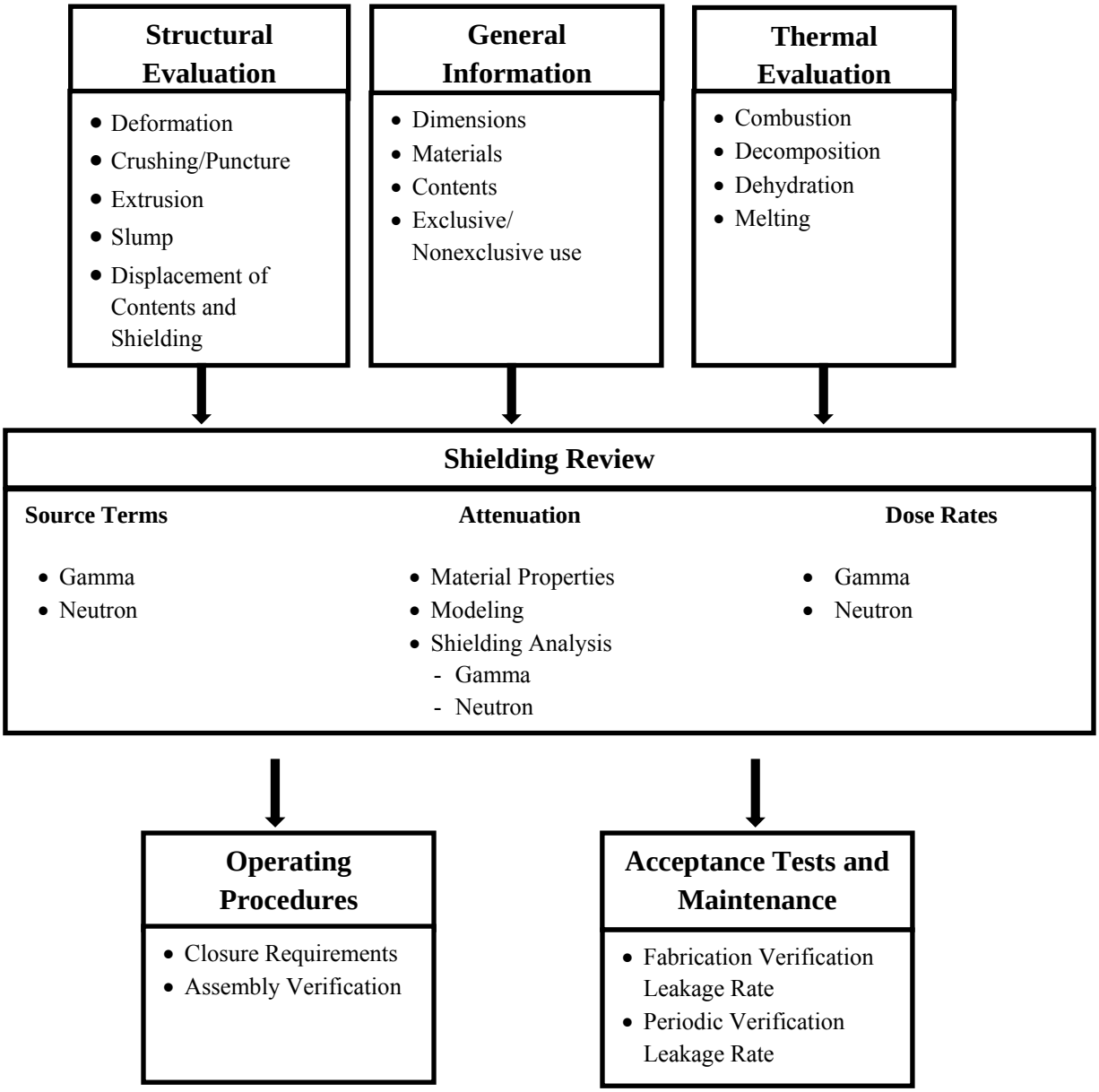

5.1 Description of Shielding Design

The RT-100 Cask Package shielding design is described and evaluated in the following sections. The design meets or exceeds all NRC and Department of Transportation (DOT) standards for a Type B(U)-96 package.

5.1.1 Design Features

The RT-100 body is a right circular cylinder 2060 mm in diameter and 2324 mm in height without the impact limiters attached. The cavity of the RT-100 is 1730 mm in diameter and 1956 mm in height. Surrounding the cavity are the cask radial wall, cask bottom wall, primary lid and a secondary lid embedded in the primary lid. The cask radial wall comprises 30 mm of steel, 90 mm of lead and 35 mm of steel for gamma shielding. The cask bottom wall comprises 50 mm of steel, 75 mm of lead and 33 mm of steel for gamma shielding. The primary lid comprises 210 mm of steel for gamma shielding. Embedded in the primary lid is a secondary lid which comprises 100 mm of steel, 60 mm of lead and 10 mm of steel for gamma shielding. The primary lid is 2016 mm in diameter and the secondary lid is 1000 mm in diameter. Under transport conditions, the top and bottom impact limiters provide additional gamma shielding from the 10 mm inner steel shell, polyurethane foam and 4 mm outer steel shell.

Dimensional tolerances and material densities used in the shielding evaluations are given in Section 5.3.1 and Section 5.3.2, respectively.

During normal conditions of transport, shielding evaluations assume that the RT-100 is transported on a truck trailer that is 2438.4 mm and 12801.6 mm long with the cask tied downed in the center. Thus, the 2 meter radial surface is 3219.2 mm from the cask centerline and the distance to the cab, taking into account the trailer hookup and the distance to back of cab, is 8915.4 mm from the cask centerline. This is a conservative assumption since the actual occupied position is at least 1828.8 mm from the back of the cab.

5.1.2 Summary Table of Maximum Radiation Levels

This section presents the maximum dose rates for both normal conditions of transport and hypothetical accident conditions at the appropriate locations for exclusive use shipments, as applicable. Table 5.1.2-1 and Table 5.1.2-2 summarize the results of the maximum radiation levels under NCT and HAC, respectively, assuming the maximum Ci/g of Co-60 in the RT-100 cavity.

Table 5.1.2-1 Summary Table of External Radiation Levels (Exclusive Use)

Normal Conditions of Transport	Package Surface mSv/h (mrem/h)			2 Meter from Edge of Vehicle mSv/h (mrem/h)		
Radiation	Top	Side	Bottom	Top	Side	Bottom
Gamma (max. Co-60)	0.3149 (31.49)	0.6381 (63.81)	0.3033 (30.33)	NA	0.095 (9.5)	NA
Neutron	0.0	0.0	0.0	NA	(0.0)	NA
Total	0.3149 (31.49)	0.6381 (63.81)	0.3033 (30.33)		0.095 (9.5)	
10 CFR 71.47 (a) Limit	2 (200)	2 (200)	2 (200)	0.1 (10)	0.1 (10)	0.1 (10)

Table 5.1.2-2 Radiation Levels 1 Meter From Package Surface

Hypothetical Accident Conditions	1 Meter from Package Surface mSv/h (mrem/h)		
Radiation	Top	Side	Bottom
Gamma (max. Co-60)	0.549 (54.9)	1.215 (121.5)	0.541 (54.1)
Neutron	0.0	0.0	0.0
Total	0.549 (54.9)	1.215 (121.5)	0.541 (54.1)
10 CFR 71.51 (a)(2) Limit	10 (1000)	10 (1000)	10 (1000)

5.2 Source Specification

The RT-100 Cask Package is designed to carry nuclear plant radioactive resins and filters as the contents specified in the General Information section. The radioactive nuclides in these resins and filters produce primarily gamma emission and to a much lesser extent neutron emission from actinide spontaneous fission and alpha-n reactions in the media.

The shielding evaluation of the RT-100 assesses the dose rate per Curie for each radionuclide with a half-life greater than 1 day. Thus, the gamma and neutron source terms are specified on a Curie basis. The total dose rate response will be based on the loaded activity, in Curies, of the resin or filter media. In general, the gamma and neutron source terms from Low Level Waste decrease over time. Since spent fuel is not transported in the RT-100, the burnup and cooling time associated with the RT-100 source terms is not applicable.

5.2.1 Gamma Source

Gamma spectra, i.e. the photon lines, are explicitly evaluated in the RT-100 shielding evaluation for nuclides with greater than 1 day half-life. The nuclide gamma spectra and intensities are taken from the SCALE 6.0 ORIGEN-S data libraries: *origen.rev02.mpdkxgam.dat* [Ref. 3]. This data file was reformatted into a data file for use in the generic energy dependent response approach to computing nuclide dose rates from a one Curie source of each nuclide.

The ORIGEN-S nuclide data library *origen.rev04.endfdec.data* was read in order to determine all nuclides with greater than 1 day half-life for use in the generic approach to computing nuclide specific gamma dose rates. The list of 281 nuclides with greater than 1 day half-life is given in Appendix 5.6.1. The selection details and associated spectra data file are provided with Reference 4. Due to the length of the data, all gamma source terms cannot be provided in the SAR, but the gamma spectra for 1 Curie Co-60 is shown in Table 5.2.1-1. Co-60 is the dominate gamma emitter and dose rate contributor from resins and filter media.

Table 5.2.1-1 One Curie Co-60 Gamma Source Term

Photon Energy	Intensity	1 Curie	
(MeV)	Photon/dis	Photon/s	Mev/s
8.68E-04	1.49E-06	5.51E+04	4.79E+01
7.46E-03	3.25E-05	1.20E+06	8.97E+03
7.48E-03	6.40E-05	2.37E+06	1.77E+04
8.26E-03	1.30E-05	4.81E+05	3.98E+03
3.47E-01	7.60E-05	2.81E+06	9.76E+05
8.26E-01	7.60E-05	2.81E+06	2.32E+06
1.17E+00	9.99E-01	3.70E+10	4.34E+10
1.33E+00	1.00E+00	3.70E+10	4.93E+10
2.16E+00	1.11E-05	4.11E+05	8.87E+05
2.51E+00	2.00E-08	7.40E+02	1.85E+03
	Total	7.40E+10	9.27E+10

5.2.2 Neutron Source

The neutron source in resins and filter media comes from decay of the actinides, i.e. 238Pu, 239Pu, 240Pu, 241Am 242Pu, 242Cm, 243Cm, and 244Cm. Generally, the activities of these nuclides are very low, and their contribution to total dose rate exterior to the cask is negligible. However, source terms evaluations were done to quantify the neutron emission per Curie for the most prominent contributors. ORIGEN-S [Ref. 3] was executed in a decay-only mode to generate multi-group spontaneous fission and alpha-n spectra for a one Curie source of the prominent actinides. The spontaneous fission and alpha-n spectra are based on the SCALE 6.0 ORIGEN-S actinide decay library, origen.rev00.alphdec.data [Ref. 3]. Alpha-n spectra for the

actinides assume borosilicate glass i.e. O, Al, Si for the target material. Borosilicate glass has conservative alpha-n target materials, in particular Al and Si, relative to typical resin materials containing just C and H. The details and associated spectra data file are provided [Reference 4]. The neutron spectra for the two most prominent nuclides Cm-244 and Pu-242 is shown in Table 5.2.2-1.

Table 5.2.2-1 One Curie Cm-244 and Pu-242 Neutron Source Term

Bin	E_{low} (MeV)	E_{high} (MeV)	Cm-244 (Neutrons/s)	Pu-242 (Neutron/s)
1	5.50E-04	3.00E-03	9.13E+00	2.84E+01
2	3.00E-03	1.70E-02	1.24E+02	3.84E+02
3	1.70E-02	2.50E-02	1.05E+02	3.24E+02
4	2.50E-02	1.00E-01	1.68E+03	5.02E+03
5	1.00E-01	4.00E-01	1.24E+04	3.62E+04
6	4.00E-01	9.00E-01	2.73E+04	7.82E+04
7	9.00E-01	1.40E+00	2.74E+04	7.56E+04
8	1.40E+00	1.85E+00	2.11E+04	5.89E+04
9	1.85E+00	2.35E+00	1.96E+04	5.48E+04
10	2.35E+00	2.48E+00	4.40E+03	1.19E+04
11	2.48E+00	3.00E+00	1.69E+04	4.18E+04
12	3.00E+00	4.80E+00	3.34E+04	7.16E+04
13	4.80E+00	6.43E+00	7.47E+03	1.70E+04
14	6.43E+00	8.19E+00	2.12E+03	4.74E+03
15	8.19E+00	2.00E+01	7.27E+02	1.35E+03
		Totals	1.75E+05	4.58E+05

5.3 Shielding Model

MCNP5 Monte Carlo [Ref. 6] is used to model the RT-100 Cask Package. Two sets of MCNP5 shielding models are created for the evaluations of the RT-100, NCT and HAC. In both cases, the model geometry was developed from the engineering drawings for the RT-100 cask. Additionally, the manufacturing tolerances, for the steel shells, the lead, and the lids are subtracted from the nominal dimensions in order to produce a conservative shielding model. A summary of the nominal and minimal shield dimensions is given in Table 5.3-1. The effects of resin and filter density and redistribution are also modeled by redistributing the material in the most conservative direction. Details of the modeling are provided in Reference 7.

Table 5.3-1 Model Shielding Dimensions

Component	Nominal	Model
Interior Barrel	30	29.7
Lead	90	85
Exterior Barrel	35	34.7
Bottom Forging	50	49.7
Bottom Lead	75	70
Bottom Wall	33	32.7
Primary Lid	210	209.5
Secondary Lid	170	169.5
Secondary Lid Lead	60	58

5.3.1 Configuration of Source and Shielding

The configuration of the source and shielding contains Proprietary Information. Therefore Section 5.3.1 is included in the Safety Analysis Report, Volume II, Proprietary Information.

5.3.2 Material Properties

Materials for the RT-100 Cask Package are stainless steel and lead in the body and polyurethane and steel in the impact limiters. The material properties used in the shielding evaluations are shown in Table 5.3.2-1. No changes are expected in body shielding under normal conditions of transport or hypothetical accident conditions. Melting of the lead will not occur. Also it is not expected that shielding properties will not degrade during the service life of the RT-100 Cask Package.

Contents transported in the RT-100 Cask Package will be resins and filter media. The following materials are used in nuclear power plant resin beds and filters:

- Polystyrene based resins such as Duralite
- Activated Charcoal
- Nylon filter media
- Zeolite - hydrated aluminosilicates such as Faujasite

The shielding evaluations will study each of these materials in the cavity of the RT-100. In the case of nylon filter media, any steel cartridge structure will be neglected, and the cavity will be assumed to be completed filled with nylon material at a reduced density.

The densities for resin and filter materials can vary quite a lot depending on the size of the particles, configuration of the filter media, i.e. tubes or fiber sheets, and the theoretical density of the material. The theoretical densities of polystyrene, carbon, Fuajasite and nylon are 1.04, 2.2, 1.93 and 1.08 g/cm^3, respectively, and resin media densities can vary from 0.3 to 1.2 g/cm^3. For the purposes of standardizing comparisons between contents, 0.65 g/cm^3 of each material is assumed in the RT-100 cavity.

Changes in the density of the resin contents are included under normal conditions of transport and hypothetical accident conditions.

Table 5.3.2-1 RT-100 Material Composition Summary

Material	Density (g/cm^3)	Element	Nuclide ID	Weight Fraction
Stainless Steel 304[7]	7.94	Fe	26000	0.6717
		Ni	28000	0.1149
		Cr	24050	0.1901
		Mn	25055	0.0200
		Si	14000	0.0100
		C	6000	0.0008
		P	15031	0.0005
Lead[7]	11.35	Pb	82000	1.0000
Polyurethane [8] Foam40[1]	0.5606	H	1001	0.0410
		C	6000	0.5440
		N	7014	0.1210
		O	8016	0.2940
Polyurethane Foam201	0.2403	H	1001	0.0410
		C	6000	0.5440
		N	7014	0.1210
		O	8016	0.2940
Polystyrene[8]	0.65	H	1001	0.0774
		C	6000	0.9226
Activated Carbon [8]	0.65	C	6000	1.0000
Nylon [8]	0.65	H	1001	0.0980
		C	6000	0.6369
		N	7014	0.1238
		O	8016	0.1414
Zeolite[9] (Fuajasite-Na)	0.65	O	8016	0.6067
		Si	14000	0.2263
		Al	13027	0.0895
		H	1001	0.0306
		Na	11023	0.0229
		Ca	20000	0.0199
		Mg	12000	0.0040

[1] NCT model assumes the impact limiter polyurethane foam is reduced in density from 40 to 35 lbs/ft^3 and from 20 to 15 lbs/ft^3. This is a conservative assumption since the lower densities produces less attenuation and are both greater than the ± 10% specification on the foam density

5.4 Shielding Evaluation

The Section describes the shielding evaluation for the RT-100 using industry accepted methodologies.

5.4.1 Methods

MCNP5, release 1.40 [Ref. 6], Monte Carlo transport is used to determine the dose rates. The ENDF/B-VI neutron cross section library [Ref. 7], ENDF60, and the ENDF/B-VI Release 8 Photo-atomic Data gamma cross section library[Ref. 8], MCPLIB04 [Ref. 9]are utilized in the transport computations. MCNP is a Monte Carlo transport code that offers a full three-dimensional combinatorial geometry modeling capability. This means that no gross approximations were required to represent the RT-100 Cask in the shielding analysis.

For gamma emitting nuclides, a generic approach to calculating dose rate responses is employed. In this approach, energy dependent dose rate responses in mrem/hr are computed for each tally segment or detector due to one a Curie source at each of the following energies:

0.3, 0.4, 0.5, 0.6, 0.7, 0.8, 0.9, 1.0, 1.1, 1.2, 1.3, 1.4, 1.5, 1.6, 1.7, 1.8, 1.9, 2.0, 2.5, 3.0, 3.5, 4.0, 4.5, 5.0, 5.5, 6.0 MeV

The energy dependent dose rate responses are computed for each NCT and HAC model/tally configuration. Once the energy dependent responses are computed by MCNP5, specific nuclide gamma line responses are estimated by interpolation between dose rate responses on the above energy grid. All gamma line dose rate responses are added together to get a specific nuclide gamma response in mrem/hr/Ci. Details of the approach including the evaluation the total Monte Carlo uncertainty are given Sections 7.3, 7.4 and 7.7.1 of Reference 7.

For neutron emitting nuclides, specific actinides are evaluated with their binned neutron spectrum from ORIGEN-S for one curie. For the major beta emitting nuclides (E_{mx}>2 MeV) from Reference 4, MCNP5 election-photon mode calculations show negligible Bremmstralung contribution to exterior dose rates for the current resin/filter contents to be shipped in the RT-100.

Once the specific nuclide responses are computed for all tallies segments and detectors, the maximum dose rate response is selected from each tally surface or detector. A Two sigma Monte Carlo uncertainty is added to the maximum to account for computational uncertainty. This maximum response plus two sigma uncertainty defines the nuclide dose rate response in mrem/hr/Ci. Table 5.6.1-1in Appendix 5.6.1 gives the complete list of gamma nuclide responses and neutron nuclide responses. Using these responses, the total dose rate in mrem/hr can be computed for any nuclide in the list, and the total dose maximum dose rate under NCT and HAC can be found by summing the contributions from all the nuclides in the resin/filter contents.

Ultimately a loading table specifying the maximum curies per gram of each nuclide will be developed. The maximum curies per gram are defined as that level of curies necessary to meet the regulatory limit at either NCT or HAC. For conservatism 5% lower than the regulatory limits is assumed, thus the NCT limit at 2 meter from the transport vehicle is taken as 9.5 mrem/hr and the cab limit is taken as 1.9 mrem/hr. Similarly, the HAC limit at 1 meter is evaluated at 950 mrem/hr.

For NCT, maximum Ci per gram is computed as follow:

Maximum Curies per gram = 9.5 mrem/hr / Response (mrem/hr/Ci) at 2 Meters/Content Mass,

Maximum Curies per gram = 1.9 mrem/hr / Response (mrem/hr/Ci) at Cab/Content Mass

For HAC, maximum Ci per gram is computed as follows:

Maximum Curies per gram = 950 mrem/hr// Response (mrem/hr/Ci) at 1 Meter /Content Mass.

Whichever condition is more limiting from either NCT or HAC will determine the maximum curies per gram of a particular nuclide. Appendix 5.6.3 gives the complete list of the maximum Ci/g limit for each of the gamma emitting nuclides and for each of the predominant neutron emitting nuclides. These limits are based on 2988576 grams of resin or filter material at a density of 0.65 g/cm^3 filling the cavity of the RT-100.

Ultimately, the cask loaded maximum Curies per gram is divided by maximum curies per gram from the shielding evaluations, and the results summed for all nuclides must be less than 100% to be acceptable for shipment.

5.4.2 Input and Output Data

Sample inputs are provided in Reference 7 for the NCT model without compaction (Figure 5.3.1-1) and 10% compaction (Figure 5.3.1-2). Sample inputs are also shown in Reference 7 for the HAC model with the end drop lead slump and pin puncture, Figures 5.3.1-4 and 5.3.1-6. Two sets of inputs are provided for each: the input for energy dependent responses at the low end of the gamma spectra 0.3, 0.4, 0.5, 0.6, 0.7, 0.8, 0.9, and 1.0 MeV, and the input for the energy dependent responses at the high end of the gamma spectra: 1.1, 1.2, 1.3, 1.4, 1.5, 1.6, 1.7, 1.8, 1.9, 2.0, 2.5, 3.0, 3.5, 4.0, 4.5, 5.0, 5.5, 6.0 MeV. Both of sets of inputs are used to estimate the side (radial) gamma dose rate response. Separate inputs are created for the top and bottom gamma dose rate responses. Details are given in Section 7.3 and Section 7.5 of Reference 7. Post processing of the energy dependent responses into detailed Co-60 responses in mrem/hr/Ci is also shown in Tables 5.6.2-1 and 5.6.2-2. Using these responses and a cask curie loading, the total dose rate in mrem/hr can be computed for Co-60 under NCT and HAC conditions. This is demonstrated in Section 5.4.4 for the maximum Curies of Co-60.

5.4.3 Flux-to-Dose-Rate Conversion

MCNP5 calculates neutron or photon flux (particles/s-cm^2) at a particular tally or detector location given the source magnitude. These values can be converted into dose by the use of flux-to-dose response functions. This is done internally in MCNP5 by associating the dose response functions to each tally in the input file. The gamma and neutron flux-to-dose response functions used in these calculations are listed in Table 5.4.3-1 and 5.4.3-2 and were taken from ANSI/ANS 6.1.1, 1977 [Ref. 11].

Table 5.4.3-1 ANSI/ANS 6.1.1-1977 – Gamma Flux-to-Dose Conversion Factors

Gamma Energy (MeV)	(rem/hr)/ (photon/cm^2-s)
0.01	3.96E-06
0.03	5.82E-07
0.05	2.90E-07
0.07	2.58E-07
0.1	2.83E-07
0.15	3.79E-07
0.2	5.01E-07
0.25	6.31E-07
0.3	7.59E-07
0.35	8.78E-07
0.4	9.85E-07
0.45	1.08E-06
0.5	1.17E-06
0.55	1.27E-06
0.6	1.36E-06
0.65	1.44E-06
0.7	1.52E-06
0.8	1.68E-06
1.0	1.98E-06
1.4	2.51E-06
1.8	2.99E-06
2.2	3.42E-06

Table 5.4.3-1 (continued)

Gamma Energy (MeV)	(rem/hr)/ (photon/cm^2-s)
2.6	3.82E-06
2.8	4.01E-06
3.25	4.41E-06
3.75	4.83E-06
4.25	5.23E-06
4.75	5.60E-06
5.0	5.80E-06
5.25	6.01E-06
5.75	6.37E-06
6.25	6.74E-06
6.75	7.11E-06
7.5	7.66E-06
9.0	8.77E-06
11.0	1.03E-05
13.0	1.18E-05
15.0	1.33E-05

Table 5.4.3-2 ANSI/ANS 6.1.1-1977 – Neutron Flux-to-Dose Conversion Factors

Neutron Energy (MeV)	Quality Factor	(rem/hr)/ $(n/cm^2\text{-}s)^2$
2.5E-8	2.0	3.67E-6
1.0E-7	2.0	3.67E-6
1.0E-6	2.0	4.46E-6
1.0E-5	2.0	4.54E-6
1.0E-4	2.0	4.18E-6
1.0E-3	2.0	3.76E-6
1.0E-2	2.5	3.56E-6
0.1	7.5	2.17E-5
0.5	11.0	9.26E-5
1.0	11.0	1.32E-4
2.5	9.0	1.25E-4
5.0	8.0	1.56E-4
7.0	7.0	1.47E-4
10.0	6.5	1.47E-4
14.0	7.5	2.08E-4
20.0	8.0	2.27E-4

5.4.4 External Radiation Levels

External radiation levels are computed in this section for the maximum Co-60 loading in the RT-100. Utilizing the maximum Ci/g for Co-60 specified in Table 5.6-4 of Appendix 5.6.3, 2.48E-04 Ci/g, and the resin mass, 2988576 grams, the maximum Co-60 loading in the RT-100 is 741.4 Ci. Multiply the Co-60 dose rate per Curie responses in Table 5.6-2 of Appendix 5.6.3 for NCT and Table 5.6-3 of Appendix 5.6.3 for HAC yields the maximum dose rates in accordance with the requirements of 10 CFR 71.47(a) [Ref. 2] and 10 CFR 71.51 [Ref.2], respectively. This is shown in Table 5.4.4-3 and Table 5.4.4-4 of Appendix 5.6.3. Note as expected the maximum Curies of Co-60 produces the limiting 2 meter dose rate of 9.5 mrem/h as specified in Section 5.4.1. Detailed segment or detector dose rates can also be computed in the same manner using Figures 5.6-5 and Figure 5.6-6 at the end of Appendix 5.6.4.

Any arbitrary set of nuclides can be evaluated knowing the Curies per gram for each nuclide and the total mass of the shipment by summing up the contributions for each and comparing to the regulatory limits.

Table 5.4.4-3 NCT Dose Rates for the Maximum Co-60 Loading in the RT-100

		NCT Dose Rates (mrem/hr)				
Activity (Ci)	**Nuclide**	**Side Surface**	**2 Meter**	**Cab**	**Bottom Surface**	**Top Surface**
741.40	co60	63.81	9.50	1.16	39.93	31.49
	Limit	200	10	2	200	200

Table 5.4.4-4 HAC Dose Rates for the Maximum Co-60 Loading in the RT-100

		HAC Dose Rates (mrem/hr)		
Activity (Ci)	**Nuclide**	**1 Meter Side**	**1 Meter Bottom**	**1 Meter Top**
741.40	co60	211.14	54.07	54.90
	Limit	1000	1000	1000

5.5 References

1. Robatel Technologies, LLC, Quality Assurance Program for Packaging and Transportation of Radioactive Material, 10 CFR 71 Subpart H, Dated January 31, 2012 and NRC Approved on March 21, 2012.
2. U.S. Nuclear Regulatory Commission, 10 CFR Part 71--PACKAGING AND TRANSPORTATION OF RADIOACTIVE MATERIAL, dated March 7, 2012 and the following specific Sections:

71.31(a)(1)	71.31(a)(2)	71.33	71.35(a)
71.31.(c)	71.71	71.43(f)	71.51(a)(1)
71.47(a)	71.47(b)	71.47	71.31
71.51(a)(2)			

3. "*ORIGEN-S: SCALE System Module To Calculate Fuel Depletion, Actinide Transmutation, Fission Product Buildup And Decay, And Associated Radiation Source Terms*," I. C. Gauld, O. W. Herman and R. M. Westfall, ORNL/TM-2005/39, Volume 2, Section F7, January 2009.
4. "*ORIGEN-S Data Libraries*," ORNL/TM-2005/39, Volume 3, Section M6, January 2009.
5. RTL-001-CALC-SH-0101, Rev. 1, "*Source Terms Characterizations for the RT-100*."
6. RSICC Code Package CCC-730, *"MCNP/MCNPX Monte Carlo N-Particle Transport Code System Including MCNP5 1.40 and MCNPX 2.5.0 and Data Libraries,"* January 2000.
7. RTL-001-CALC-SH-0201, Rev. 0, "*Shielding Evaluation of the RT-100 Transport Cask."*
8. ORNL/TM-2005/39, Volume III, Section M8, *"Standard Composition Library,"* L.M. Petrie, P.B. Fox and K. Lucius, January 2009.
9. PNNL-15870, "*Compendium of Material Composition Data for Radiation Transport Modeling*," R.G. Williams III, C.J. Gesh and R.T. Pagh, April 2006.
10. http://webmineral.com/data/Faujasite-Na.shtml.
11. ANSI/ANS 6.1.1-1997, "Neutron and Gamma Flux-To-Dose Conversion Factors."

5.6 Appendix 5

5.6.1 List of Gamma Nuclides with Great than 1 Day Half Life

5.6.2-1 Gamma Dose Rate Response (NCT)

5.6.2-2 Gamma Dose Rate Response (HAC)

5.6.3-1 Nuclide Maximum Ci/g Loading Limits

Table 5.6.1-1 List of Gamma Nuclides with Greater Than 1 Day Half Life

Nuclide	ID	Branch	Daughter	Yield	Nuclide	ID	Branch	Daughter	Yield	Nuclide	ID	Branch	Daughter	Yield
na22	110220				cs136	551360				pa233	912330			
na24	110240				ba131	561310				u230	922300			
cl36	170360				ba133	561330				u232	922320			
ar37	180370				ba135m	561351				u233	922330			
k40	190400				cs137	561371				u234	922340			
ca41	200410				ba140	561400				u235	922350			
ca45	200450				la137	571370	br	ba137m	0.95	u236	922360			
ca47	200470				la138	571380				u237	922370			
sc46	210460				la140	571400				u238	922380			
sc47	210470				ce139	581390				np235	932350			
sc48	210480				ce141	581410				np236	932360			
v49	230490				ce143	581430				np237	932370			
cr51	240510				ce144	581440				np238	932380			
mn54	250540				pr143	591430				np239	932390			
fe55	260550				pr144	591440				pu236	942360			
fe59	260590				nd147	601470				pu237	942370			
co58	270580				pm145	611450				pu238	942380			
co60	270600				pm147	611470				pu239	942390			
ni59	280590				pm148	611480				pu240	942400			
cu64	290640				pm148m	611481				pu241	942410			
cu67	290670				pm149	611490				pu242	942420			
zn65	300650				pm151	611510				pu246	942460			
ge71	320710				sm145	621450				am240	952400			
as76	330760				sm151	621510				am241	952410			
as77	330770				sm153	621530				am242m	952421			
se75	340750				eu152	631520				am243	952430			
br82	350820				eu154	631540				cm241	962410			
kr79	360790				eu155	631550				cm242	962420			
kr81	360810				eu156	631560				cm243	962430			
kr85	360850				gd153	641530				cm244	962440			
rb86	370860				tb157	651570				cm245	962450			
sr85	380850				tb160	651600				cm246	962460			
sr90	390900	br	yr90	1	tb161	651610				cm247	962470			
y91	390910				dy159	661590				cm248	962480			
zr89	400890				dy166	661660				bk249	972490			
zr95	400950				ho166	671660				cf249	982490			
nb91	410910				ho166m	671661				cf250	982500			
nb92	410920				er169	681690				cf251	982510			
nb93m	410931				er172	681720				cf252	982520			
nb94	410940				tm170	691700				es253	992530			
nb95	410950				tm171	691710				es254	992540			
nb95m	410951				tm172	691720				be7	40070			
mo93	420930				yb169	701690				ga67	310670			
tc97	430970				yb175	701750				ge69	320690			
tc97m	430971				lu176	711760				as71	330710			
tc98	430980				lu177	711770				zn72	300720			
mo99	430991	br	tc99m	0.88	lu177m	711771				as72	330720			
ru97	440970				hf175	721750				se72	340720			
ru103	441030				hf181	721810				as73	330730			

Table 5.6-1 (Continued)

Nuclide	ID	Branch	Daughter	Yield	Nuclide	ID	Branch	Daughter	Yield	Nuclide	ID	Branch	Daughter	Yield
rh102	451020				hf182	721820				as74	330740			
rh105	451050				ta182	731820				br77	350770			
ru106	451060	br	rh106	1	ta183	731830				rb83	370830			
pd103	461030				w181	741810				sr83	380830			
ag108m	471081				w185	741850				rb84	370840			
ag110	471100				w188	741880				y87	390870			
ag110m	471101				re186	751860				y88	390880			
ag111	471110				re189	751890				zr88	400880			
cd109	481090				os185	761850				tc95m	430951			
cd113m	481131				os191	761910				tc96	430960			
cd115	481150				os193	761930				rh99	450990			
cd115m	481151				os194	761940				rh101	451010			
in113m	491131				ir192	771920				rh101m	451011			
in114m	491141				ir194m	771941				rh102m	451021			
sn113	501130				pt191	781910				ag105	471050			
sm113m	501131				pt193	781930				ag106m	471061			
sn117m	501171				pt193m	781931				te118	521180			
sn119m	501191				pt195m	781951				sb119	511190			
sn121m	501211				au198	791980				sb120m	511201			
sn123	501230				au199	791990				i124	531240			
sn125	501250				hg203	802030				sn126	501260			
sb122	511220				tl204	812040				sb127	511270			
sb124	511240				pb205	822050				cs129	551290			
sb125	511250				bi208	832080				te132	521320			
sb126	511260				bi210	832100				nd140	601400			
te121	521210				bi210m	832101				pm143	611430			
te121m	521211				po210	842100				cs144	551440			
te123	521230				pb210	822100				pm144	611440			
te123m	521231				rn222	862220				pm146	611460			
te125m	521251				ra223	882230				gd147	641470			
te127m	521271				ra224	882240				eu149	631490			
te129m	521291				ra225	882250				gd149	641490			
te131m	521311				ra226	882260				tb153	651530			
i125	531250				ra228	882280				tb155	651550			
i126	531260				ac225	892250				tb156	651560			
i129	531290				ac227	892270				tb158	651580			
i131	531310				th227	902270				tm165	691650			
xe127	541270				th228	902280				yb166	701660			
xe129m	541291				th229	902290				tm167	691670			
xe131m	541311				th230	902300				tm168	691680			
xe133	541330				th231	902310				lu169	711690			
xe133m	541331				th232	902320				lu171	711710			
cs131	551310				th234	902340				lu172	711720			
cs132	551320				pa231	912310				hf172	721720			
cs134	551340				pa232	912320								

5.6.2 Gamma Nuclide Responses

Table 5.6.2-1 NCT Gamma Dose Rate Responses (mrem/hr/Ci)

	Side				Bottom			Top	
Nuclide	**Surface**	**2 Meter**	**Cab**		**Surface**	**2 Meter**		**Surface**	**2 Meter**
na24	1.06E+00	1.62E-01	1.99E-02		7.53E-01	1.70E-01		5.55E-01	1.24E-01
bi208	8.75E-01	1.33E-01	1.63E-02		6.23E-01	1.39E-01		4.48E-01	9.91E-02
cs144	7.15E-01	1.09E-01	1.35E-02		5.15E-01	1.16E-01		3.98E-01	9.36E-02
y88	3.01E-01	4.49E-02	5.47E-03		2.13E-01	4.47E-02		1.36E-01	2.80E-02
la140	1.89E-01	2.82E-02	3.44E-03		1.22E-01	2.84E-02		8.67E-02	1.82E-02
sb124	1.35E-01	2.00E-02	2.44E-03		8.93E-02	1.93E-02		6.15E-02	1.21E-02
eu156	1.16E-01	1.75E-02	2.13E-03		7.66E-02	1.77E-02		5.46E-02	1.14E-02
co60	8.61E-02	1.28E-02	1.57E-03		5.39E-02	1.24E-02		4.25E-02	9.14E-03
sc48	7.11E-02	1.07E-02	1.31E-03		4.50E-02	1.04E-02		3.72E-02	8.24E-03
la138	6.23E-02	9.22E-03	1.13E-03		4.37E-02	9.17E-03		2.80E-02	6.19E-03
tb156	5.62E-02	8.44E-03	1.03E-03		3.68E-02	8.09E-03		2.71E-02	5.58E-03
lu169	5.55E-02	8.35E-03	1.02E-03		3.70E-02	7.90E-03		2.60E-02	5.37E-03
ag106m	5.36E-02	8.11E-03	9.81E-04		3.60E-02	7.75E-03		2.61E-02	5.40E-03
i124	5.27E-02	7.90E-03	9.62E-04		3.54E-02	7.65E-03		2.47E-02	5.03E-03
na22	4.61E-02	6.88E-03	8.43E-04		2.75E-02	7.15E-03		2.29E-02	4.90E-03
ag110m	4.31E-02	6.44E-03	7.88E-04		2.99E-02	6.26E-03		2.10E-02	4.63E-03
ca47	3.84E-02	5.69E-03	7.02E-04		2.28E-02	6.11E-03		1.87E-02	4.08E-03
br82	3.80E-02	5.68E-03	6.94E-04		2.55E-02	5.72E-03		1.89E-02	4.10E-03
as72	3.60E-02	5.50E-03	6.74E-04		2.51E-02	5.66E-03		1.90E-02	4.25E-03
lu172	3.55E-02	5.39E-03	6.50E-04		2.38E-02	5.49E-03		1.86E-02	4.08E-03
sb120m	3.52E-02	5.19E-03	6.40E-04		2.23E-02	5.45E-03		2.01E-02	4.22E-03
fe59	3.00E-02	4.49E-03	5.49E-04		1.91E-02	4.61E-03		1.61E-02	3.58E-03
tm172	2.76E-02	4.15E-03	5.02E-04		1.85E-02	3.98E-03		1.26E-02	2.64E-03
te131m	2.75E-02	4.16E-03	5.08E-04		1.80E-02	4.04E-03		1.39E-02	2.91E-03
ta182	2.74E-02	4.02E-03	4.95E-04		1.69E-02	4.09E-03		1.45E-02	3.03E-03
eu152	2.47E-02	3.68E-03	4.53E-04		1.67E-02	3.77E-03		1.21E-02	2.77E-03
eu154	2.44E-02	3.67E-03	4.48E-04		1.50E-02	3.67E-03		1.25E-02	2.66E-03
pm148	2.41E-02	3.58E-03	4.35E-04		1.73E-02	3.78E-03		1.10E-02	2.34E-03
sc46	2.12E-02	3.21E-03	3.91E-04		1.43E-02	3.57E-03		1.32E-02	3.09E-03
cs136	1.61E-02	2.43E-03	2.99E-04		1.02E-02	2.50E-03		9.78E-03	2.21E-03
ge69	1.48E-02	2.25E-03	2.73E-04		9.93E-03	2.36E-03		7.92E-03	1.78E-03
tb160	1.36E-02	2.03E-03	2.51E-04		8.47E-03	1.98E-03		7.70E-03	1.65E-03
sn125	1.17E-02	1.77E-03	2.16E-04		7.79E-03	1.85E-03		5.77E-03	1.26E-03
gd147	1.16E-02	1.76E-03	2.15E-04		7.73E-03	1.71E-03		6.25E-03	1.34E-03

Table 5.6.2-1 (Continued)

sr83	1.14E-02	1.73E-03	2.10E-04		7.50E-03	1.66E-03		5.53E-03	1.16E-03
k40	1.10E-02	1.63E-03	1.98E-04		7.88E-03	1.72E-03		4.92E-03	1.05E-03
zn65	9.28E-03	1.40E-03	1.69E-04		6.30E-03	1.62E-03		5.56E-03	1.31E-03
rh102m	8.33E-03	1.28E-03	1.56E-04		5.60E-03	1.41E-03		5.49E-03	1.31E-03
as76	8.26E-03	1.24E-03	1.52E-04		5.41E-03	1.22E-03		3.99E-03	8.33E-04
tc96	6.26E-03	9.75E-04	1.23E-04		4.24E-03	9.95E-04		5.38E-03	1.26E-03
am240	5.08E-03	7.81E-04	9.78E-05		3.45E-03	7.62E-04		3.79E-03	8.34E-04
np238	4.61E-03	7.05E-04	8.71E-05		3.13E-03	7.21E-04		3.10E-03	7.19E-04
pr144	4.10E-03	6.19E-04	7.56E-05		2.82E-03	6.58E-04		1.95E-03	4.14E-04
rb84	3.90E-03	6.08E-04	7.54E-05		2.75E-03	5.98E-04		2.50E-03	5.57E-04
nb92	3.90E-03	6.07E-04	7.66E-05		2.66E-03	5.92E-04		3.26E-03	7.21E-04
tb158	3.74E-03	5.71E-04	7.16E-05		2.50E-03	5.55E-04		2.74E-03	6.11E-04
cs134	3.33E-03	5.14E-04	6.48E-05		2.19E-03	5.00E-04		2.36E-03	5.52E-04
rh99	3.23E-03	4.89E-04	5.94E-05		2.13E-03	4.62E-04		1.56E-03	3.22E-04
pa232	2.98E-03	4.62E-04	5.82E-05		2.03E-03	4.49E-04		2.42E-03	5.34E-04
tm165	2.50E-03	3.71E-04	4.59E-05		1.59E-03	3.62E-04		1.33E-03	2.92E-04
sb126	2.49E-03	4.05E-04	5.30E-05		1.64E-03	3.71E-04		2.52E-03	5.60E-04
zr89	2.31E-03	3.46E-04	4.23E-05		1.55E-03	3.29E-04		1.06E-03	2.09E-04
ho166m	2.31E-03	3.65E-04	4.66E-05		1.54E-03	3.45E-04		2.00E-03	4.56E-04
pm148m	2.30E-03	3.63E-04	4.63E-05		1.58E-03	3.58E-04		2.05E-03	4.69E-04
nb94	2.09E-03	3.44E-04	4.53E-05		1.46E-03	3.31E-04		2.44E-03	5.46E-04
tm168	2.02E-03	3.20E-04	4.07E-05		1.34E-03	3.09E-04		1.72E-03	3.90E-04
co58	1.89E-03	3.02E-04	3.83E-05		1.31E-03	2.86E-04		1.65E-03	3.68E-04
ru106	1.69E-03	2.59E-04	3.15E-05		1.15E-03	2.56E-04		8.69E-04	1.87E-04
as71	1.56E-03	2.38E-04	2.88E-05		1.03E-03	2.52E-04		9.02E-04	2.05E-04
rh102	1.51E-03	2.30E-04	2.79E-05		1.00E-03	2.39E-04		8.28E-04	1.87E-04
mn54	1.30E-03	2.13E-04	2.75E-05		9.19E-04	2.07E-04		1.52E-03	3.44E-04
ho166	1.29E-03	1.91E-04	2.33E-05		8.48E-04	1.87E-04		5.80E-04	1.24E-04
rb86	1.23E-03	1.85E-04	2.23E-05		8.57E-04	2.24E-04		7.66E-04	1.87E-04
cs132	8.08E-04	1.31E-04	1.68E-05		5.17E-04	1.21E-04		6.53E-04	1.49E-04
tc95m	8.05E-04	1.28E-04	1.64E-05		5.58E-04	1.28E-04		7.96E-04	1.84E-04
ag105	6.21E-04	9.53E-05	1.16E-05		4.35E-04	1.14E-04		4.24E-04	1.06E-04
tb153	5.60E-04	8.58E-05	1.06E-05		3.67E-04	8.41E-05		3.83E-04	8.76E-05
cd115m	5.55E-04	8.33E-05	1.03E-05		3.38E-04	8.66E-05		2.95E-04	6.47E-05
sb122	5.30E-04	8.10E-05	1.01E-05		3.24E-04	7.62E-05		3.35E-04	7.66E-05
lu171	5.07E-04	8.58E-05	1.14E-05		3.42E-04	7.78E-05		6.33E-04	1.43E-04
nb95	4.98E-04	9.10E-05	1.25E-05		3.66E-04	8.35E-05		8.52E-04	1.95E-04
sb127	4.71E-04	7.74E-05	1.01E-05		3.04E-04	7.12E-05		4.93E-04	1.12E-04

Table 5.6.2-1 (Continued)

tc98	4.62E-04	9.97E-05	1.37E-05		3.38E-04	7.88E-05		1.01E-03	2.30E-04
te121m	4.34E-04	6.54E-05	7.83E-06		3.02E-04	7.97E-05		2.67E-04	6.52E-05
kr79	3.96E-04	5.99E-05	7.41E-06		2.54E-04	5.92E-05		2.27E-04	5.26E-05
ir194m	3.71E-04	7.17E-05	9.97E-06		2.50E-04	5.83E-05		6.18E-04	1.40E-04
zr95	3.62E-04	7.02E-05	9.80E-06		2.65E-04	6.10E-05		6.92E-04	1.57E-04
i126	3.44E-04	5.47E-05	7.02E-06		2.39E-04	5.25E-05		2.80E-04	6.49E-05
cu64	3.14E-04	4.74E-05	5.89E-06		1.99E-04	4.58E-05		1.57E-04	3.63E-05
ag108m	2.69E-04	6.88E-05	9.14E-06		1.95E-04	4.61E-05		7.07E-04	1.60E-04
gd149	2.58E-04	4.23E-05	5.47E-06		1.78E-04	3.94E-05		2.91E-04	6.51E-05
os185	2.46E-04	3.96E-05	5.07E-06		1.71E-04	3.86E-05		2.61E-04	5.83E-05
pm146	2.11E-04	4.20E-05	5.84E-06		1.54E-04	3.53E-05		4.18E-04	9.45E-05
as74	1.97E-04	3.34E-05	4.31E-06		1.26E-04	2.95E-05		1.99E-04	4.48E-05
ba131	1.95E-04	3.06E-05	3.80E-06		1.34E-04	3.28E-05		1.47E-04	3.58E-05
pm144	1.88E-04	6.21E-05	8.04E-06		1.37E-04	3.40E-05		6.50E-04	1.46E-04
pm143	1.41E-04	2.75E-05	3.87E-06		1.04E-04	2.40E-05		2.70E-04	6.14E-05
ce143	1.28E-04	2.05E-05	2.64E-06		8.85E-05	2.20E-05		1.21E-04	2.93E-05
br77	9.77E-05	1.62E-05	2.11E-06		6.65E-05	1.47E-05		1.11E-04	2.48E-05
sn123	9.60E-05	1.45E-05	1.73E-06		6.69E-05	1.76E-05		5.94E-05	1.45E-05
y91	9.55E-05	1.39E-05	1.73E-06		6.03E-05	1.55E-05		5.03E-05	1.02E-05
cs137	7.72E-05	2.65E-05	3.47E-06		5.74E-05	1.46E-05		2.76E-04	6.22E-05
pm151	7.03E-05	1.25E-05	1.69E-06		4.89E-05	1.09E-05		1.04E-04	2.33E-05
ag110	5.72E-05	9.02E-06	1.13E-06		3.86E-05	8.43E-06		3.70E-05	8.24E-06
au198	2.57E-05	4.32E-06	5.71E-07		1.76E-05	4.63E-06		2.49E-05	6.52E-06
te129m	1.44E-05	2.66E-06	3.84E-07		9.87E-06	2.39E-06		2.28E-05	5.17E-06
sb125	1.40E-05	6.96E-06	8.08E-07		9.08E-06	2.14E-06		7.59E-05	1.74E-05
rb83	1.29E-05	6.68E-06	7.63E-07		7.52E-06	1.71E-06		7.20E-05	1.62E-05
te121	1.26E-05	9.18E-06	1.04E-06		8.18E-06	2.01E-06		1.03E-04	2.39E-05
in114m	1.23E-05	2.94E-06	3.97E-07		8.94E-06	2.10E-06		2.98E-05	6.76E-06
cs129	1.06E-05	2.07E-06	2.72E-07		7.01E-06	1.56E-06		1.61E-05	3.78E-06
i131	9.67E-06	3.27E-06	3.96E-07		6.69E-06	1.61E-06		3.25E-05	7.65E-06
sr85	5.93E-06	5.16E-06	5.66E-07		2.30E-06	6.10E-07		5.35E-05	1.21E-05
ru103	5.15E-06	4.50E-06	4.95E-07		1.70E-06	5.17E-07		4.54E-05	1.03E-05
cm241	3.81E-06	2.93E-06	3.24E-07		1.49E-06	4.26E-07		2.86E-05	6.51E-06
ga67	3.74E-06	6.22E-07	8.11E-08		2.59E-06	5.86E-07		4.26E-06	1.01E-06
pm149	3.47E-06	5.67E-07	7.31E-08		2.41E-06	5.41E-07		3.96E-06	8.89E-07
y87	3.44E-06	3.86E-06	4.28E-07		6.01E-07	2.61E-07		3.44E-05	7.86E-06
ar37	3.13E-06	1.24E-06	1.47E-07		1.98E-06	4.67E-07		1.32E-05	2.95E-06
bi210m	2.99E-06	1.11E-06	1.39E-07		2.16E-06	5.45E-07		1.16E-05	2.67E-06

Table 5.6.2-1 (Continued)

pt191	2.91E-06	1.66E-06	1.89E-07		1.69E-06	3.91E-07		1.75E-05	3.92E-06
hf181	2.72E-06	2.89E-06	3.12E-07		5.74E-07	2.38E-07		2.75E-05	6.29E-06
cd115	2.45E-06	2.04E-06	2.24E-07		1.14E-06	2.63E-07		2.17E-05	4.90E-06
ba140	2.32E-06	1.85E-06	2.06E-07		1.27E-06	3.08E-07		1.99E-05	4.51E-06
nd147	2.14E-06	1.25E-06	1.43E-07		1.27E-06	2.99E-07		1.34E-05	3.03E-06
ru97	1.94E-06	4.05E-07	5.36E-08		1.34E-06	2.95E-07		3.86E-06	9.00E-07
os193	9.17E-07	3.75E-07	4.42E-08		5.40E-07	1.19E-07		3.77E-06	8.45E-07
zr88	8.38E-07	9.76E-07	1.26E-07		5.63E-13	1.35E-13		5.41E-06	1.77E-06
cm247	6.92E-07	8.31E-07	1.05E-07		1.47E-08	6.38E-09		4.91E-06	1.51E-06
er172	6.41E-07	6.88E-07	8.34E-08		1.12E-07	3.22E-08		4.89E-06	1.30E-06
cf249	6.12E-07	6.86E-07	8.75E-08		2.10E-08	5.04E-09		3.89E-06	1.26E-06
in113m	5.47E-07	6.37E-07	8.19E-08		5.63E-13	1.35E-13		3.53E-06	1.15E-06
rh101m	5.28E-07	4.41E-07	4.97E-08		2.67E-07	6.50E-08		4.44E-06	1.20E-06
ba133	4.17E-07	4.72E-07	5.92E-08		5.63E-13	1.35E-13		2.71E-06	8.96E-07
hf175	3.96E-07	4.49E-07	5.67E-08		3.71E-09	1.62E-09		2.63E-06	8.78E-07
ni59	3.57E-07	5.94E-08	7.78E-09		2.45E-07	5.41E-08		4.27E-07	9.55E-08
be7	3.14E-07	3.40E-07	3.67E-08		6.28E-08	2.74E-08		3.23E-06	7.41E-07
lu177m	2.31E-07	2.92E-07	3.49E-08		1.86E-08	8.09E-09		2.05E-06	5.50E-07
th227	2.23E-07	4.69E-08	6.16E-09		1.45E-07	3.21E-08		3.66E-07	9.59E-08
ag111	2.04E-07	5.82E-08	7.80E-09		1.25E-07	2.81E-08		4.31E-07	1.19E-07
lu176	1.77E-07	1.37E-07	1.62E-08		7.23E-11	3.15E-11		9.27E-07	4.51E-07
re189	1.55E-07	1.22E-07	1.35E-08		8.18E-08	1.96E-08		1.32E-06	2.97E-07
re186	1.49E-07	2.91E-08	3.99E-09		1.09E-07	2.50E-08		2.88E-07	6.57E-08
pa233	1.35E-07	1.34E-07	1.58E-08		2.15E-09	9.35E-10		8.85E-07	3.20E-07
tm167	1.35E-07	1.08E-07	1.19E-08		7.15E-08	1.73E-08		1.17E-06	2.64E-07
ir192	1.29E-07	1.34E-07	1.45E-08		2.82E-08	1.10E-08		1.27E-06	2.91E-07
xe127	1.27E-07	1.44E-07	1.85E-08		3.99E-09	9.31E-10		8.16E-07	2.66E-07
se75	1.15E-07	1.32E-07	1.68E-08		5.26E-09	1.22E-09		7.66E-07	2.42E-07
nb95m	1.07E-07	2.23E-08	2.95E-09		7.64E-08	1.72E-08		2.25E-07	5.19E-08
ra223	9.69E-08	8.53E-08	9.73E-09		3.46E-08	7.97E-09		7.54E-07	1.85E-07
ta183	7.90E-08	8.90E-08	1.10E-08		2.64E-10	1.15E-10		5.22E-07	1.72E-07
eu149	7.54E-08	7.15E-08	8.01E-09		2.57E-08	6.37E-09		6.87E-07	1.60E-07
tb155	6.72E-08	5.40E-08	6.27E-09		2.99E-08	7.05E-09		4.77E-07	1.19E-07
yb175	5.70E-08	6.65E-08	8.56E-09		5.63E-13	1.35E-13		3.68E-07	1.20E-07
rh105	5.69E-08	5.53E-08	6.81E-09		1.41E-10	6.13E-11		3.42E-07	1.35E-07
rh101	3.85E-08	4.07E-08	5.07E-09		3.45E-10	1.50E-10		2.47E-07	8.89E-08
as77	2.87E-08	2.45E-08	2.69E-09		1.29E-08	3.10E-09		2.59E-07	5.87E-08
cr51	2.73E-08	2.70E-08	3.37E-09		5.63E-13	1.35E-13		1.62E-07	6.39E-08

Table 5.6.2-1 (Continued)

kr85	2.49E-08	2.24E-08	2.46E-09		9.36E-09	2.52E-09		2.33E-07	5.29E-08
sm153	2.35E-08	1.59E-08	1.77E-09		1.29E-08	3.02E-09		1.76E-07	3.94E-08
yb169	2.16E-08	1.63E-08	1.94E-09		1.70E-09	4.16E-10		1.15E-07	5.22E-08
nb91	1.74E-08	1.61E-08	1.76E-09		5.84E-09	1.70E-09		1.65E-07	3.76E-08
sn126	1.62E-08	1.73E-08	2.07E-09		5.63E-13	1.35E-13		1.06E-07	3.59E-08
pa231	1.36E-08	1.27E-08	1.49E-09		2.76E-10	6.88E-11		8.50E-08	3.29E-08
te127m	1.15E-08	4.21E-09	5.30E-10		8.33E-09	2.10E-09		4.45E-08	1.00E-08
dy166	1.15E-08	1.41E-08	1.65E-09		1.18E-09	5.14E-10		1.05E-07	2.65E-08
np239	1.14E-08	1.24E-08	1.52E-09		1.07E-10	4.30E-11		7.71E-08	2.62E-08
la137	8.12E-09	4.71E-09	5.34E-10		5.73E-09	1.39E-09		5.34E-08	1.26E-08
po210	7.90E-09	1.37E-09	1.82E-10		5.75E-09	1.30E-09		1.18E-08	2.71E-09
sr90	7.59E-09	1.15E-09	1.40E-10		5.19E-09	1.22E-09		3.61E-09	7.71E-10
u235	6.38E-09	2.12E-09	2.68E-10		3.99E-09	9.05E-10		1.76E-08	4.37E-09
tb161	5.74E-09	4.61E-09	5.15E-10		3.09E-09	7.50E-10		4.93E-08	1.11E-08
u237	5.53E-09	6.04E-09	7.48E-10		5.63E-13	1.35E-13		3.55E-08	1.21E-08
ac225	4.65E-09	4.87E-09	5.32E-10		9.56E-10	3.24E-10		4.65E-08	1.05E-08
es253	4.17E-09	1.06E-09	1.40E-10		2.52E-09	5.75E-10		7.56E-09	1.90E-09
rn222	3.92E-09	3.67E-09	4.02E-10		1.26E-09	3.79E-10		3.75E-08	8.54E-09
ra224	3.76E-09	1.41E-09	1.77E-10		2.70E-09	6.79E-10		1.48E-08	3.35E-09
cu67	2.77E-09	2.75E-09	3.43E-10		5.63E-13	1.35E-13		1.65E-08	6.46E-09
u233	2.18E-09	3.41E-10	4.27E-11		1.45E-09	3.54E-10		1.51E-09	3.89E-10
cm242	1.51E-09	2.41E-10	3.09E-11		1.00E-09	2.22E-10		1.45E-09	3.27E-10
am243	1.25E-09	4.35E-10	5.51E-11		9.20E-10	2.32E-10		4.58E-09	1.03E-09
am241	1.24E-09	3.15E-10	4.19E-11		8.96E-10	2.12E-10		3.23E-09	7.28E-10
es254	9.29E-10	9.92E-10	1.20E-10		5.63E-13	1.35E-13		6.01E-09	2.05E-09
cm244	8.77E-10	1.52E-10	2.02E-11		6.20E-10	1.38E-10		1.26E-09	2.86E-10
lu177	6.13E-10	6.13E-10	7.68E-11		5.63E-13	1.35E-13		3.66E-09	1.43E-09
sn113	6.00E-10	2.28E-10	2.84E-11		4.26E-10	1.08E-10		2.44E-09	5.56E-10
pu238	5.01E-10	8.33E-11	1.09E-11		3.50E-10	7.87E-11		6.12E-10	1.39E-10
th228	3.42E-10	5.52E-11	7.06E-12		2.37E-10	5.28E-11		3.61E-10	8.07E-11
pd103	2.40E-10	2.90E-10	3.38E-11		3.01E-11	1.31E-11		2.26E-09	5.63E-10
pu239	2.11E-10	8.88E-11	1.08E-11		1.20E-10	2.80E-11		7.45E-10	1.82E-10
pu236	1.92E-10	8.03E-11	9.77E-12		1.31E-10	3.28E-11		8.56E-10	1.93E-10
cl36	1.80E-10	1.67E-10	1.83E-11		6.05E-11	1.77E-11		1.72E-09	3.90E-10
cm243	1.68E-10	1.76E-10	2.13E-11		5.63E-13	1.35E-13		1.07E-09	3.80E-10
sm145	1.21E-10	1.30E-10	1.41E-11		2.49E-11	1.08E-11		1.25E-09	2.87E-10
ra226	1.03E-10	7.19E-11	8.19E-12		6.92E-11	1.70E-11		8.00E-10	1.89E-10
v49	7.80E-11	8.38E-11	9.29E-12		1.38E-11	3.95E-12		7.39E-10	1.69E-10

Table 5.6.2-1 (Continued)

u232	4.83E-11	1.66E-11	2.17E-12		2.88E-11	6.45E-12		1.26E-10	3.65E-11
pu240	2.45E-11	6.03E-12	8.10E-13		1.72E-11	4.04E-12		6.03E-11	1.35E-11
xe133	2.43E-11	2.60E-11	3.27E-12		5.63E-13	1.35E-13		1.52E-10	5.46E-11
u230	1.53E-11	7.08E-12	8.36E-13		1.08E-11	2.55E-12		7.80E-11	1.81E-11
th231	7.25E-12	6.40E-12	7.68E-13		5.63E-13	1.35E-13		4.14E-11	1.77E-11
pu237	5.47E-12	6.03E-12	6.76E-13		9.14E-13	3.12E-13		5.25E-11	1.30E-11
u234	4.65E-12	3.17E-12	3.54E-13		2.50E-12	5.91E-13		3.38E-11	7.61E-12
pr143	4.41E-12	8.58E-13	1.21E-13		3.25E-12	7.50E-13		8.42E-12	1.92E-12
ca41	1.79E-12	1.96E-12	2.31E-13		5.63E-13	1.35E-13		1.22E-11	3.86E-12
sn117m	9.79E-13	8.90E-13	1.10E-13		5.63E-13	1.35E-13		5.56E-12	2.36E-12
th230	8.61E-13	5.25E-13	5.93E-14		5.63E-13	1.35E-13		5.92E-12	1.37E-12
mo99	2.46E-13	2.48E-13	3.11E-14		5.63E-13	1.35E-13		1.48E-12	5.68E-13
bi210	9.61E-14	6.71E-14	7.80E-15		5.63E-13	1.35E-13		4.75E-13	2.54E-13
bk249	6.07E-14	6.34E-14	7.94E-15		5.63E-13	1.35E-13		3.74E-13	1.38E-13
tc97	6.07E-14	6.34E-14	7.94E-15		5.63E-13	1.35E-13		3.74E-13	1.38E-13
sc47	6.07E-14	6.34E-14	7.94E-15		5.63E-13	1.35E-13		3.74E-13	1.38E-13
ge71	6.07E-14	6.34E-14	7.94E-15		5.63E-13	1.35E-13		3.74E-13	1.38E-13
kr81	6.07E-14	6.34E-14	7.94E-15		5.63E-13	1.35E-13		3.74E-13	1.38E-13
nb93m	6.07E-14	6.34E-14	7.94E-15		5.63E-13	1.35E-13		3.74E-13	1.38E-13
te123	6.07E-14	6.34E-14	7.94E-15		5.63E-13	1.35E-13		3.74E-13	1.38E-13
te123m	6.07E-14	6.34E-14	7.94E-15		5.63E-13	1.35E-13		3.74E-13	1.38E-13
te125m	6.07E-14	6.34E-14	7.94E-15		5.63E-13	1.35E-13		3.74E-13	1.38E-13
ce139	6.07E-14	6.34E-14	7.94E-15		5.63E-13	1.35E-13		3.74E-13	1.38E-13
ce141	6.07E-14	6.34E-14	7.94E-15		5.63E-13	1.35E-13		3.74E-13	1.38E-13
zn72	6.07E-14	6.34E-14	7.94E-15		5.63E-13	1.35E-13		3.74E-13	1.38E-13
se72	6.07E-14	6.34E-14	7.94E-15		5.63E-13	1.35E-13		3.74E-13	1.38E-13
as73	6.07E-14	6.34E-14	7.94E-15		5.63E-13	1.35E-13		3.74E-13	1.38E-13
te118	6.07E-14	6.34E-14	7.94E-15		5.63E-13	1.35E-13		3.74E-13	1.38E-13
sb119	6.07E-14	6.34E-14	7.94E-15		5.63E-13	1.35E-13		3.74E-13	1.38E-13
yb166	6.07E-14	6.34E-14	7.94E-15		5.63E-13	1.35E-13		3.74E-13	1.38E-13
hf172	6.07E-14	6.34E-14	7.94E-15		5.63E-13	1.35E-13		3.74E-13	1.38E-13
ca45	6.07E-14	6.34E-14	7.94E-15		5.63E-13	1.35E-13		3.74E-13	1.38E-13
fe55	6.07E-14	6.34E-14	7.94E-15		5.63E-13	1.35E-13		3.74E-13	1.38E-13
mo93	6.07E-14	6.34E-14	7.94E-15		5.63E-13	1.35E-13		3.74E-13	1.38E-13
tc97m	6.07E-14	6.34E-14	7.94E-15		5.63E-13	1.35E-13		3.74E-13	1.38E-13
cd109	6.07E-14	6.34E-14	7.94E-15		5.63E-13	1.35E-13		3.74E-13	1.38E-13
cd113m	6.07E-14	6.34E-14	7.94E-15		5.63E-13	1.35E-13		3.74E-13	1.38E-13
sm113m	6.07E-14	6.34E-14	7.94E-15		5.63E-13	1.35E-13		3.74E-13	1.38E-13

Table 5.6.2-1 (Continued)

sn119m	6.07E-14	6.34E-14	7.94E-15		5.63E-13	1.35E-13		3.74E-13	1.38E-13
sn121m	6.07E-14	6.34E-14	7.94E-15		5.63E-13	1.35E-13		3.74E-13	1.38E-13
i125	6.07E-14	6.34E-14	7.94E-15		5.63E-13	1.35E-13		3.74E-13	1.38E-13
i129	6.07E-14	6.34E-14	7.94E-15		5.63E-13	1.35E-13		3.74E-13	1.38E-13
xe129m	6.07E-14	6.34E-14	7.94E-15		5.63E-13	1.35E-13		3.74E-13	1.38E-13
xe131m	6.07E-14	6.34E-14	7.94E-15		5.63E-13	1.35E-13		3.74E-13	1.38E-13
xe133m	6.07E-14	6.34E-14	7.94E-15		5.63E-13	1.35E-13		3.74E-13	1.38E-13
cs131	6.07E-14	6.34E-14	7.94E-15		5.63E-13	1.35E-13		3.74E-13	1.38E-13
ba135m	6.07E-14	6.34E-14	7.94E-15		5.63E-13	1.35E-13		3.74E-13	1.38E-13
ce144	6.07E-14	6.34E-14	7.94E-15		5.63E-13	1.35E-13		3.74E-13	1.38E-13
pm145	6.07E-14	6.34E-14	7.94E-15		5.63E-13	1.35E-13		3.74E-13	1.38E-13
pm147	6.07E-14	6.34E-14	7.94E-15		5.63E-13	1.35E-13		3.74E-13	1.38E-13
sm151	6.07E-14	6.34E-14	7.94E-15		5.63E-13	1.35E-13		3.74E-13	1.38E-13
eu155	6.07E-14	6.34E-14	7.94E-15		5.63E-13	1.35E-13		3.74E-13	1.38E-13
gd153	6.07E-14	6.34E-14	7.94E-15		5.63E-13	1.35E-13		3.74E-13	1.38E-13
tb157	6.07E-14	6.34E-14	7.94E-15		5.63E-13	1.35E-13		3.74E-13	1.38E-13
dy159	6.07E-14	6.34E-14	7.94E-15		5.63E-13	1.35E-13		3.74E-13	1.38E-13
er169	6.07E-14	6.34E-14	7.94E-15		5.63E-13	1.35E-13		3.74E-13	1.38E-13
tm170	6.07E-14	6.34E-14	7.94E-15		5.63E-13	1.35E-13		3.74E-13	1.38E-13
tm171	6.07E-14	6.34E-14	7.94E-15		5.63E-13	1.35E-13		3.74E-13	1.38E-13
hf182	6.07E-14	6.34E-14	7.94E-15		5.63E-13	1.35E-13		3.74E-13	1.38E-13
w181	6.07E-14	6.34E-14	7.94E-15		5.63E-13	1.35E-13		3.74E-13	1.38E-13
w185	6.07E-14	6.34E-14	7.94E-15		5.63E-13	1.35E-13		3.74E-13	1.38E-13
w188	6.07E-14	6.34E-14	7.94E-15		5.63E-13	1.35E-13		3.74E-13	1.38E-13
os191	6.07E-14	6.34E-14	7.94E-15		5.63E-13	1.35E-13		3.74E-13	1.38E-13
os194	6.07E-14	6.34E-14	7.94E-15		5.63E-13	1.35E-13		3.74E-13	1.38E-13
pt193	6.07E-14	6.34E-14	7.94E-15		5.63E-13	1.35E-13		3.74E-13	1.38E-13
pt193m	6.07E-14	6.34E-14	7.94E-15		5.63E-13	1.35E-13		3.74E-13	1.38E-13
pt195m	6.07E-14	6.34E-14	7.94E-15		5.63E-13	1.35E-13		3.74E-13	1.38E-13
au199	6.07E-14	6.34E-14	7.94E-15		5.63E-13	1.35E-13		3.74E-13	1.38E-13
hg203	6.07E-14	6.34E-14	7.94E-15		5.63E-13	1.35E-13		3.74E-13	1.38E-13
tl204	6.07E-14	6.34E-14	7.94E-15		5.63E-13	1.35E-13		3.74E-13	1.38E-13
pb205	6.07E-14	6.34E-14	7.94E-15		5.63E-13	1.35E-13		3.74E-13	1.38E-13
pb210	6.07E-14	6.34E-14	7.94E-15		5.63E-13	1.35E-13		3.74E-13	1.38E-13
ra225	6.07E-14	6.34E-14	7.94E-15		5.63E-13	1.35E-13		3.74E-13	1.38E-13
ra228	6.07E-14	6.34E-14	7.94E-15		5.63E-13	1.35E-13		3.74E-13	1.38E-13
ac227	6.07E-14	6.34E-14	7.94E-15		5.63E-13	1.35E-13		3.74E-13	1.38E-13
th229	6.07E-14	6.34E-14	7.94E-15		5.63E-13	1.35E-13		3.74E-13	1.38E-13

Table 5.6.2-1 (Continued)

th232	6.07E-14	6.34E-14	7.94E-15		5.63E-13	1.35E-13		3.74E-13	1.38E-13
th234	6.07E-14	6.34E-14	7.94E-15		5.63E-13	1.35E-13		3.74E-13	1.38E-13
u236	6.07E-14	6.34E-14	7.94E-15		5.63E-13	1.35E-13		3.74E-13	1.38E-13
u238	6.07E-14	6.34E-14	7.94E-15		5.63E-13	1.35E-13		3.74E-13	1.38E-13
np235	6.07E-14	6.34E-14	7.94E-15		5.63E-13	1.35E-13		3.74E-13	1.38E-13
np236	6.07E-14	6.34E-14	7.94E-15		5.63E-13	1.35E-13		3.74E-13	1.38E-13
np237	6.07E-14	6.34E-14	7.94E-15		5.63E-13	1.35E-13		3.74E-13	1.38E-13
pu241	6.07E-14	6.34E-14	7.94E-15		5.63E-13	1.35E-13		3.74E-13	1.38E-13
pu242	6.07E-14	6.34E-14	7.94E-15		5.63E-13	1.35E-13		3.74E-13	1.38E-13
pu246	6.07E-14	6.34E-14	7.94E-15		5.63E-13	1.35E-13		3.74E-13	1.38E-13
am242m	6.07E-14	6.34E-14	7.94E-15		5.63E-13	1.35E-13		3.74E-13	1.38E-13
cm245	6.07E-14	6.34E-14	7.94E-15		5.63E-13	1.35E-13		3.74E-13	1.38E-13
cm246	6.07E-14	6.34E-14	7.94E-15		5.63E-13	1.35E-13		3.74E-13	1.38E-13
cm248	6.07E-14	6.34E-14	7.94E-15		5.63E-13	1.35E-13		3.74E-13	1.38E-13
cf250	6.07E-14	6.34E-14	7.94E-15		5.63E-13	1.35E-13		3.74E-13	1.38E-13
cf251	6.07E-14	6.34E-14	7.94E-15		5.63E-13	1.35E-13		3.74E-13	1.38E-13
cf252	6.07E-14	6.34E-14	7.94E-15		5.63E-13	1.35E-13		3.74E-13	1.38E-13
te132	6.07E-14	6.34E-14	7.94E-15		5.63E-13	1.35E-13		3.74E-13	1.38E-13
nd140	6.07E-14	6.34E-14	7.94E-15		5.63E-13	1.35E-13		3.74E-13	1.38E-13
h3	6.07E-14	6.34E-14	7.94E-15		5.63E-13	1.35E-13		3.74E-13	1.38E-13
ni63	6.07E-14	6.34E-14	7.94E-15		5.63E-13	1.35E-13		3.74E-13	1.38E-13
co57	6.07E-14	6.34E-14	7.94E-15		5.63E-13	1.35E-13		3.74E-13	1.38E-13
sr89	6.07E-14	6.34E-14	7.94E-15		5.63E-13	1.35E-13		3.74E-13	1.38E-13
tc99	6.07E-14	6.34E-14	7.94E-15		5.63E-13	1.35E-13		3.74E-13	1.38E-13
sn113m	6.07E-14	6.34E-14	7.94E-15		5.63E-13	1.35E-13		3.74E-13	1.38E-13
am242	6.07E-14	6.34E-14	7.94E-15		5.63E-13	1.35E-13		3.74E-13	1.38E-13
tc99m	6.07E-14	6.34E-14	7.94E-15		5.63E-13	1.35E-13		3.74E-13	1.38E-13
c14	6.07E-14	6.34E-14	7.94E-15		5.63E-13	1.35E-13		3.74E-13	1.38E-13

Table 5.6.2-2 HAC Gamma Dose Rate Responses (mrem/hr/Ci)

	Side	Bottom	Top
Nuclide	1 Meter	1 Meter	1 Meter
na24	8.43E-01	8.28E-01	8.48E-01
bi208	6.41E-01	6.85E-01	6.77E-01
cs144	5.60E-01	5.63E-01	6.14E-01
y88	3.25E-01	2.53E-01	2.22E-01
la140	2.32E-01	1.57E-01	1.38E-01
sb124	2.21E-01	1.09E-01	9.62E-02
eu156	1.98E-01	9.10E-02	8.68E-02
co60	1.64E-01	7.29E-02	7.40E-02
sc48	1.40E-01	6.40E-02	6.84E-02
la138	1.38E-01	5.09E-02	4.83E-02
tb156	1.37E-01	4.59E-02	4.65E-02
ag106m	1.32E-01	4.18E-02	4.50E-02
lu169	1.24E-01	4.40E-02	4.33E-02
na22	1.16E-01	4.10E-02	4.04E-02
i124	1.14E-01	4.30E-02	3.89E-02
ag110m	1.13E-01	3.49E-02	3.78E-02
sb120m	1.07E-01	3.11E-02	3.85E-02
br82	1.07E-01	3.14E-02	3.34E-02
ca47	9.79E-02	3.55E-02	3.32E-02
lu172	9.61E-02	2.99E-02	3.24E-02
fe59	8.95E-02	2.72E-02	3.04E-02
as72	8.49E-02	2.83E-02	2.87E-02
ta182	8.25E-02	2.35E-02	2.68E-02
sc46	8.15E-02	1.95E-02	2.55E-02
te131m	7.50E-02	2.20E-02	2.38E-02
eu154	7.21E-02	2.14E-02	2.23E-02
tm172	7.16E-02	2.21E-02	2.09E-02
eu152	7.16E-02	2.07E-02	2.16E-02
pm148	7.06E-02	1.92E-02	1.87E-02
cs136	6.93E-02	1.42E-02	1.89E-02
tb160	6.55E-02	1.19E-02	1.48E-02
ge69	6.12E-02	1.27E-02	1.38E-02
gd147	5.69E-02	9.82E-03	1.08E-02
tc96	5.50E-02	5.95E-03	1.15E-02
rh102m	5.20E-02	7.57E-03	1.14E-02
zn65	4.80E-02	8.87E-03	1.03E-02

Table 5.6.2-2 (Continued)

sn125	4.80E-02	9.65E-03	9.64E-03
sr83	4.78E-02	8.49E-03	9.31E-03
k40	4.74E-02	9.15E-03	8.35E-03
am240	4.43E-02	4.94E-03	7.82E-03
nb92	4.41E-02	3.83E-03	6.84E-03
as76	4.29E-02	6.53E-03	6.38E-03
np238	4.04E-02	4.38E-03	6.66E-03
tb158	3.85E-02	3.44E-03	5.68E-03
sb126	3.73E-02	2.24E-03	5.49E-03
pa232	3.68E-02	2.91E-03	5.03E-03
nb94	3.66E-02	2.33E-03	5.29E-03
rb84	3.65E-02	3.52E-03	4.88E-03
cs134	3.50E-02	2.98E-03	4.95E-03
pm148m	3.50E-02	2.18E-03	4.50E-03
ho166m	3.41E-02	2.14E-03	4.22E-03
tm168	3.37E-02	1.89E-03	3.62E-03
co58	3.28E-02	1.78E-03	3.45E-03
mn54	3.24E-02	1.37E-03	3.30E-03
pr144	2.97E-02	3.25E-03	3.03E-03
rh99	2.58E-02	2.62E-03	2.54E-03
tm165	2.34E-02	2.14E-03	2.65E-03
tc98	2.23E-02	5.44E-04	2.41E-03
zr89	1.88E-02	1.89E-03	1.71E-03
as71	1.82E-02	1.37E-03	2.03E-03
nb95	1.80E-02	5.67E-04	2.15E-03
tc95m	1.73E-02	7.97E-04	2.04E-03
rh102	1.73E-02	1.24E-03	1.51E-03
ag108m	1.66E-02	3.21E-04	1.91E-03
ru106	1.61E-02	1.33E-03	1.39E-03
rb86	1.47E-02	1.15E-03	1.56E-03
zr95	1.23E-02	4.08E-04	1.68E-03
pm144	1.18E-02	2.43E-04	1.66E-03
ir194m	1.17E-02	3.35E-04	1.46E-03
cs132	1.07E-02	7.22E-04	1.40E-03
lu171	1.04E-02	5.04E-04	1.42E-03
ho166	1.03E-02	1.05E-03	9.76E-04
sb127	9.53E-03	4.48E-04	1.07E-03
pm146	9.35E-03	2.42E-04	9.71E-04

Table 5.6.2-2 (Continued)

ag105	9.15E-03	5.89E-04	8.41E-04
tb153	8.74E-03	5.01E-04	8.16E-04
sb122	8.13E-03	4.52E-04	7.86E-04
gd149	7.94E-03	2.61E-04	6.82E-04
cs137	7.72E-03	1.05E-04	7.56E-04
i126	7.53E-03	3.01E-04	6.08E-04
cd115m	7.37E-03	5.17E-04	5.59E-04
pm143	6.97E-03	1.65E-04	6.30E-04
os185	6.04E-03	2.51E-04	6.00E-04
te121m	5.94E-03	4.19E-04	5.71E-04
kr79	5.77E-03	3.73E-04	5.45E-04
as74	5.70E-03	1.63E-04	4.86E-04
cu64	5.66E-03	2.63E-04	4.43E-04
ba131	5.39E-03	1.79E-04	4.89E-04
te121	5.16E-03	6.28E-05	4.32E-04
ce143	5.13E-03	1.21E-04	4.46E-04
br77	4.57E-03	1.01E-04	4.01E-04
pm151	4.22E-03	9.58E-05	3.86E-04
rb83	4.15E-03	5.30E-05	3.13E-04
sb125	4.11E-03	6.76E-05	3.25E-04
sr85	3.84E-03	4.11E-05	3.01E-04
ru103	3.80E-03	4.09E-05	2.82E-04
y87	3.48E-03	1.61E-05	2.58E-04
sn123	3.38E-03	1.01E-04	2.64E-04
y91	3.25E-03	9.81E-05	2.36E-04
hf181	2.94E-03	1.52E-05	2.47E-04
cm241	2.81E-03	4.08E-05	2.23E-04
i131	2.55E-03	6.61E-05	2.08E-04
ag110	2.53E-03	9.02E-05	1.60E-04
au198	2.38E-03	8.65E-05	1.39E-04
in114m	2.32E-03	7.44E-05	1.67E-04
cd115	2.28E-03	1.67E-05	1.52E-04
ba140	2.07E-03	1.92E-05	1.29E-04
te129m	2.02E-03	7.92E-05	1.39E-04
pt191	1.96E-03	4.07E-05	1.36E-04
cs129	1.93E-03	5.27E-05	1.09E-04
nd147	1.92E-03	3.32E-05	1.24E-04
ar37	1.88E-03	4.18E-05	1.18E-04

Table 5.6.2-2 (Continued)

bi210m	1.49E-03	4.86E-05	1.18E-04
zr88	1.49E-03	1.45E-05	9.66E-05
cm247	1.40E-03	1.29E-05	8.18E-05
er172	1.35E-03	7.68E-06	9.05E-05
cf249	1.28E-03	1.26E-05	7.80E-05
rh101m	1.05E-03	7.39E-06	7.48E-05
in113m	9.72E-04	8.25E-06	7.55E-05
ba133	8.60E-04	7.05E-06	5.70E-05
hf175	8.47E-04	6.92E-06	5.28E-05
be7	8.45E-04	3.79E-06	6.10E-05
ga67	6.63E-04	4.64E-05	5.14E-05
lu176	5.35E-04	2.03E-06	2.49E-05
os193	5.33E-04	1.46E-05	8.08E-05
ru97	4.58E-04	4.00E-05	3.63E-05
lu177m	4.36E-04	3.92E-06	3.19E-05
pm149	4.33E-04	4.32E-05	2.98E-05
pa233	4.15E-04	2.33E-06	1.44E-05
ir192	3.73E-04	1.55E-06	2.73E-05
xe127	3.61E-04	3.56E-06	2.30E-05
re189	2.69E-04	3.48E-06	2.68E-05
se75	2.63E-04	3.21E-06	1.42E-05
tm167	2.44E-04	2.72E-06	2.11E-05
ta183	2.35E-04	1.99E-06	9.20E-06
rh105	2.19E-04	9.52E-07	7.87E-06
ra223	1.67E-04	1.40E-06	1.40E-05
eu149	1.67E-04	9.61E-07	1.34E-05
yb175	1.67E-04	1.78E-06	9.58E-06
rh101	1.56E-04	7.92E-07	8.07E-06
ag111	1.44E-04	4.77E-06	1.03E-05
tb155	1.42E-04	1.20E-06	8.55E-06
cr51	1.38E-04	6.75E-07	4.04E-06
th227	1.18E-04	5.73E-06	8.93E-06
yb169	1.01E-04	3.02E-08	1.81E-06
ni59	9.78E-05	8.19E-06	9.38E-06
as77	9.25E-05	7.73E-07	7.15E-06
pa231	6.65E-05	5.49E-08	9.41E-07
sn126	4.28E-05	2.31E-07	1.40E-06
kr85	3.56E-05	3.61E-07	6.12E-06

Table 5.6.2-2 (Continued)

re186	3.47E-05	4.34E-06	6.03E-06
nb91	2.99E-05	1.77E-07	1.94E-06
np239	2.57E-05	1.69E-07	1.04E-06
nb95m	1.92E-05	3.80E-06	2.48E-06
sm153	1.69E-05	7.03E-07	1.89E-06
dy166	1.30E-05	7.96E-08	1.05E-06
u237	1.07E-05	4.36E-08	3.71E-07
ac225	1.05E-05	8.86E-09	5.98E-07
tb161	9.58E-06	5.36E-08	5.28E-07
la137	6.73E-06	2.20E-07	6.83E-07
cu67	5.91E-06	1.28E-08	2.84E-07
rn222	5.48E-06	1.51E-08	3.32E-07
te127m	4.84E-06	5.13E-07	3.21E-07
u235	4.48E-06	1.19E-07	2.47E-07
es254	3.69E-06	2.14E-09	5.77E-08
ra224	2.75E-06	7.38E-08	2.28E-07
lu177	2.33E-06	1.84E-09	6.53E-08
es253	1.07E-06	4.13E-08	1.36E-07
po210	1.04E-06	2.37E-07	1.52E-07
am243	8.50E-07	1.49E-08	4.94E-08
pd103	3.11E-07	1.42E-09	1.45E-08
cm243	2.66E-07	9.25E-10	1.21E-08
am241	2.52E-07	6.03E-09	2.62E-08
sr90	2.42E-07	8.16E-08	1.39E-08
sn113	2.41E-07	2.35E-09	1.31E-08
cl36	2.26E-07	7.75E-10	1.47E-08
u233	2.08E-07	1.68E-08	9.86E-09
sm145	1.75E-07	5.28E-10	1.29E-08
cm242	1.48E-07	4.89E-09	8.20E-09
cm244	1.36E-07	3.18E-09	8.27E-09
v49	8.49E-08	3.49E-10	4.71E-09
pu239	6.23E-08	1.49E-09	3.42E-09
ra226	5.67E-08	9.31E-10	3.42E-09
pu236	5.09E-08	1.67E-09	5.57E-09
pu238	4.62E-08	1.93E-09	3.46E-09
xe133	4.18E-08	1.77E-10	3.17E-09
th228	2.05E-08	1.84E-09	2.93E-09
u232	1.51E-08	5.20E-10	1.33E-09

Table 5.6.2-2 (Continued)

th231	1.06E-08	2.85E-11	6.37E-10
pu237	7.38E-09	2.19E-11	7.74E-10
u230	6.42E-09	2.36E-10	1.21E-09
pu240	6.16E-09	4.28E-10	4.01E-10
u234	5.60E-09	7.04E-11	3.09E-10
ca41	4.28E-09	2.04E-11	2.34E-10
sn117m	2.94E-09	5.57E-12	1.64E-10
pr143	1.46E-09	1.24E-10	9.00E-11
th230	7.33E-10	1.80E-11	4.67E-11
mo99	5.33E-10	5.15E-12	2.92E-11
bi210	3.58E-10	1.86E-12	1.90E-11
bk249	2.85E-10	2.91E-12	2.19E-11
tc97	2.85E-10	1.86E-12	2.19E-11
ca45	2.85E-10	1.86E-12	2.19E-11
sc47	2.85E-10	1.86E-12	2.19E-11
fe55	2.85E-10	1.86E-12	2.19E-11
ge71	2.85E-10	1.86E-12	2.19E-11
kr81	2.85E-10	1.86E-12	2.19E-11
nb93m	2.85E-10	1.86E-12	2.19E-11
mo93	2.85E-10	1.86E-12	2.19E-11
tc97m	2.85E-10	1.86E-12	2.19E-11
cd109	2.85E-10	1.86E-12	2.19E-11
cd113m	2.85E-10	1.86E-12	2.19E-11
sm113m	2.85E-10	1.86E-12	2.19E-11
sn119m	2.85E-10	1.86E-12	2.19E-11
sn121m	2.85E-10	1.86E-12	2.19E-11
te123	2.85E-10	1.86E-12	2.19E-11
te123m	2.85E-10	1.86E-12	2.19E-11
te125m	2.85E-10	1.86E-12	2.19E-11
i125	2.85E-10	1.86E-12	2.19E-11
i129	2.85E-10	1.86E-12	2.19E-11
xe129m	2.85E-10	1.86E-12	2.19E-11
xe131m	2.85E-10	1.86E-12	2.19E-11
xe133m	2.85E-10	1.86E-12	2.19E-11
cs131	2.85E-10	1.86E-12	2.19E-11
ba135m	2.85E-10	1.86E-12	2.19E-11
ce139	2.85E-10	1.86E-12	2.19E-11
ce141	2.85E-10	1.86E-12	2.19E-11

Table 5.6.2-2 (Continued)

ce144	2.85E-10	1.86E-12	2.19E-11
pm145	2.85E-10	1.86E-12	2.19E-11
pm147	2.85E-10	1.86E-12	2.19E-11
sm151	2.85E-10	1.86E-12	2.19E-11
eu155	2.85E-10	1.86E-12	2.19E-11
gd153	2.85E-10	1.86E-12	2.19E-11
tb157	2.85E-10	1.86E-12	2.19E-11
dy159	2.85E-10	1.86E-12	2.19E-11
er169	2.85E-10	1.86E-12	2.19E-11
tm170	2.85E-10	1.86E-12	2.19E-11
tm171	2.85E-10	1.86E-12	2.19E-11
hf182	2.85E-10	1.86E-12	2.19E-11
w181	2.85E-10	1.86E-12	2.19E-11
w185	2.85E-10	1.86E-12	2.19E-11
w188	2.85E-10	1.86E-12	2.19E-11
os191	2.85E-10	1.86E-12	2.19E-11
os194	2.85E-10	1.86E-12	2.19E-11
pt193	2.85E-10	1.86E-12	2.19E-11
pt193m	2.85E-10	1.86E-12	2.19E-11
pt195m	2.85E-10	1.86E-12	2.19E-11
au199	2.85E-10	1.86E-12	2.19E-11
hg203	2.85E-10	1.86E-12	2.19E-11
tl204	2.85E-10	1.86E-12	2.19E-11
pb205	2.85E-10	1.86E-12	2.19E-11
pb210	2.85E-10	1.86E-12	2.19E-11
ra225	2.85E-10	1.86E-12	2.19E-11
ra228	2.85E-10	1.86E-12	2.19E-11
ac227	2.85E-10	1.86E-12	2.19E-11
th229	2.85E-10	1.86E-12	2.19E-11
th232	2.85E-10	1.86E-12	2.19E-11
th234	2.85E-10	1.86E-12	2.19E-11
u236	2.85E-10	1.86E-12	2.19E-11
u238	2.85E-10	1.86E-12	2.19E-11
np235	2.85E-10	1.86E-12	2.19E-11
np236	2.85E-10	1.86E-12	2.19E-11
np237	2.85E-10	1.86E-12	2.19E-11
pu241	2.85E-10	1.86E-12	2.19E-11
pu242	2.85E-10	1.86E-12	2.19E-11

Table 5.6.2-2 (Continued)

pu246	2.85E-10	1.86E-12	2.19E-11
am242m	2.85E-10	1.86E-12	2.19E-11
cm245	2.85E-10	1.86E-12	2.19E-11
cm246	2.85E-10	1.86E-12	2.19E-11
cm248	2.85E-10	1.86E-12	2.19E-11
cf250	2.85E-10	1.86E-12	2.19E-11
cf251	2.85E-10	1.86E-12	2.19E-11
cf252	2.85E-10	1.86E-12	2.19E-11
zn72	2.85E-10	1.86E-12	2.19E-11
se72	2.85E-10	1.86E-12	2.19E-11
as73	2.85E-10	1.86E-12	2.19E-11
te118	2.85E-10	1.86E-12	2.19E-11
sb119	2.85E-10	1.86E-12	2.19E-11
te132	2.85E-10	1.86E-12	2.19E-11
nd140	2.85E-10	1.86E-12	2.19E-11
yb166	2.85E-10	1.86E-12	2.19E-11
hf172	2.85E-10	1.86E-12	2.19E-11
h3	2.85E-10	1.86E-12	2.19E-11
ni63	2.85E-10	1.86E-12	2.19E-11
co57	2.85E-10	1.86E-12	2.19E-11
sr89	2.85E-10	1.86E-12	2.19E-11
tc99	2.85E-10	1.86E-12	2.19E-11
sn113m	2.85E-10	1.86E-12	2.19E-11
am242	2.85E-10	1.86E-12	2.19E-11
tc99m	2.85E-10	1.86E-12	2.19E-11
c14	2.85E-10	1.86E-12	2.19E-11

Table 5.6.2-3 NCT Nuclide Neutron Dose Rate Responses (mrem/hr/Ci)

Nuclide	Side	2 Meter	Cab		Bottom	2 Meter		Top	2 Meter
Pu242	9.59E-02	6.48E-03	7.24E-04		1.84E-02	2.54E-03		4.54E-03	4.39E-04
Cm244	4.00E-02	2.61E-03	2.92E-04		7.00E-03	9.20E-04		1.58E-03	2.31E-04
Cm242	1.24E-02	8.13E-04	9.21E-05		2.15E-03	2.62E-04		4.11E-04	9.29E-05
Cm243	8.87E-03	5.93E-04	6.67E-05		1.50E-03	1.86E-04		3.00E-04	6.21E-05
Pu238	6.95E-03	4.75E-04	5.23E-05		1.33E-03	1.56E-04		2.38E-04	4.43E-05
Am241	7.01E-03	4.65E-04	5.19E-05		1.29E-03	1.56E-04		2.40E-04	4.14E-05
Pu240	6.30E-03	4.25E-04	4.78E-05		1.12E-03	1.42E-04		1.77E-04	3.16E-05
Pu239	5.37E-03	3.57E-04	4.02E-05		1.04E-03	1.38E-04		1.72E-04	2.52E-05

Table 5.6.2-4 HAC Nuclide Neutron Dose Rate Responses (mrem/hr/Ci)

	1 Meter Side	1 Meter Bottom	1 Meter Top
Pu242	2.18E-02	1.90E-02	8.48E-03
Cm244	8.81E-03	7.33E-03	3.28E-03
Cm242	2.74E-03	2.45E-03	1.10E-03
Cm243	1.99E-03	1.84E-03	7.83E-04
Pu238	1.58E-03	1.33E-03	6.37E-04
Am241	1.57E-03	1.28E-03	5.89E-04
Pu240	1.42E-03	1.25E-03	5.73E-04
Pu239	1.20E-03	1.08E-03	5.07E-04

5.6.3 Nuclide Maximum Ci/g Loading Limits

Table 5.6.3-1 Nuclide Maximum Ci/g Loading Limits based on Gamma Response

Nuclide	Max. Ci/g	Condition
na24	1.96E-05	NCT
bi208	2.39E-05	NCT
cs144	2.91E-05	NCT
y88	7.08E-05	NCT
la140	1.13E-04	NCT
sb124	1.59E-04	NCT
eu156	1.82E-04	NCT
co60	2.48E-04	NCT
sc48	2.98E-04	NCT
la138	3.45E-04	NCT
tb156	3.77E-04	NCT
lu169	3.81E-04	NCT
ag106m	3.92E-04	NCT
i124	4.02E-04	NCT
na22	4.62E-04	NCT
ag110m	4.93E-04	NCT
ca47	5.58E-04	NCT
br82	5.59E-04	NCT
as72	5.78E-04	NCT
lu172	5.89E-04	NCT
sb120m	6.13E-04	NCT
fe59	7.09E-04	NCT
tm172	7.65E-04	NCT
te131m	7.65E-04	NCT
ta182	7.91E-04	NCT
eu152	8.63E-04	NCT
eu154	8.66E-04	NCT
pm148	8.88E-04	NCT
sc46	9.90E-04	NCT
cs136	1.31E-03	NCT
ge69	1.41E-03	NCT
tb160	1.57E-03	NCT
sn125	1.79E-03	NCT
gd147	1.80E-03	NCT
sr83	1.84E-03	NCT
k40	1.95E-03	NCT
zn65	2.27E-03	NCT

Table 5.6.3-1 (Continued)

rh102m	2.48E-03	NCT
as76	2.56E-03	NCT
tc96	3.26E-03	NCT
am240	4.07E-03	NCT
np238	4.51E-03	NCT
pr144	5.13E-03	NCT
rb84	5.23E-03	NCT
nb92	5.23E-03	NCT
tb158	5.57E-03	NCT
cs134	6.18E-03	NCT
rh99	6.50E-03	NCT
pa232	6.87E-03	NCT
tm165	8.57E-03	NCT
sb126	7.84E-03	NCT
zr89	9.19E-03	NCT
ho166m	8.70E-03	NCT
pm148m	8.75E-03	NCT
nb94	8.69E-03	HAC
tm168	9.44E-03	HAC
co58	9.69E-03	HAC
ru106	1.23E-02	NCT
as71	1.34E-02	NCT
rh102	1.38E-02	NCT
mn54	9.82E-03	HAC
ho166	1.66E-02	NCT
rb86	1.71E-02	NCT
cs132	2.43E-02	NCT
tc95m	1.84E-02	HAC
ag105	3.34E-02	NCT
tb153	3.64E-02	HAC
cd115m	3.82E-02	NCT
sb122	3.91E-02	HAC
lu171	3.05E-02	HAC
nb95	1.76E-02	HAC
sb127	3.33E-02	HAC
tc98	1.43E-02	HAC
te121m	4.86E-02	NCT
kr79	5.31E-02	NCT

Table 5.6.3-1 (Continued)

ir194m	2.73E-02	HAC
zr95	2.58E-02	HAC
i126	4.22E-02	HAC
cu64	5.62E-02	HAC
ag108m	1.92E-02	HAC
gd149	4.00E-02	HAC
os185	5.26E-02	HAC
pm146	3.40E-02	HAC
as74	5.57E-02	HAC
ba131	5.90E-02	HAC
pm144	2.69E-02	HAC
pm143	4.56E-02	HAC
ce143	6.20E-02	HAC
br77	6.95E-02	HAC
sn123	9.41E-02	HAC
y91	9.78E-02	HAC
cs137	4.12E-02	HAC
pm151	7.54E-02	HAC
ag110	1.26E-01	HAC
au198	1.33E-01	HAC
te129m	1.57E-01	HAC
sb125	7.73E-02	HAC
rb83	7.66E-02	HAC
te121	6.16E-02	HAC
in114m	1.37E-01	HAC
cs129	1.64E-01	HAC
i131	1.25E-01	HAC
sr85	8.28E-02	HAC
ru103	8.37E-02	HAC
cm241	1.13E-01	HAC
ga67	4.79E-01	HAC
pm149	7.34E-01	HAC
y87	9.14E-02	HAC
ar37	1.69E-01	HAC
bi210m	2.13E-01	HAC
pt191	1.63E-01	HAC
hf181	1.08E-01	HAC
cd115	1.40E-01	HAC

Table 5.6.3-1 (Continued)

ba140	1.53E-01	HAC
nd147	1.66E-01	HAC
ru97	6.94E-01	HAC
os193	5.96E-01	HAC
zr88	2.14E-01	HAC
cm247	2.27E-01	HAC
er172	2.36E-01	HAC
cf249	2.48E-01	HAC
in113m	3.27E-01	HAC
rh101m	3.03E-01	HAC
ba133	3.70E-01	HAC
hf175	3.75E-01	HAC
ni59	3.25E+00	HAC
be7	3.76E-01	HAC
lu177m	7.28E-01	HAC
th227	2.68E+00	HAC
ag111	2.20E+00	HAC
lu176	5.94E-01	HAC
re189	1.18E+00	HAC
re186	9.17E+00	HAC
pa233	7.66E-01	HAC
tm167	1.30E+00	HAC
ir192	8.53E-01	HAC
xe127	8.81E-01	HAC
se75	1.21E+00	HAC
nb95m	1.66E+01	HAC
ra223	1.90E+00	HAC
ta183	1.35E+00	HAC
eu149	1.91E+00	HAC
tb155	2.24E+00	HAC
yb175	1.91E+00	HAC
rh105	1.45E+00	HAC
rh101	2.04E+00	HAC
as77	3.44E+00	HAC
cr51	2.30E+00	HAC
kr85	8.93E+00	HAC
sm153	1.88E+01	HAC
yb169	3.14E+00	HAC

Table 5.6.3-1 (Continued)

nb91	1.06E+01	HAC
sn126	7.42E+00	HAC
pa231	4.78E+00	HAC
te127m	6.56E+01	HAC
dy166	2.45E+01	HAC
np239	1.24E+01	HAC
la137	4.72E+01	HAC
po210	3.07E+02	HAC
sr90	1.32E+03	HAC
u235	7.10E+01	HAC
tb161	3.32E+01	HAC
u237	2.98E+01	HAC
ac225	3.02E+01	HAC
es253	2.96E+02	HAC
rn222	5.80E+01	HAC
ra224	1.16E+02	HAC
cu67	5.37E+01	HAC
u233	1.53E+03	HAC
cm242	2.14E+03	HAC
am243	3.74E+02	HAC
am241	1.26E+03	HAC
es254	8.62E+01	HAC
cm244	2.35E+03	HAC
lu177	1.37E+02	HAC
sn113	1.32E+03	HAC
pu238	6.87E+03	HAC
th228	1.55E+04	HAC
pd103	1.02E+03	HAC
pu239	5.10E+03	HAC
pu236	6.24E+03	HAC
cl36	1.41E+03	HAC
cm243	1.19E+03	HAC
sm145	1.82E+03	HAC
ra226	5.60E+03	HAC
v49	3.74E+03	HAC
u232	2.10E+04	HAC
pu240	5.16E+04	HAC
xe133	7.61E+03	HAC

Table 5.6.3-1 (Continued)

u230	4.95E+04	HAC
th231	2.99E+04	HAC
pu237	4.31E+04	HAC
u234	5.68E+04	HAC
pr143	2.18E+05	HAC
ca41	7.43E+04	HAC
sn117m	1.08E+05	HAC
th230	4.34E+05	HAC
mo99	5.96E+05	HAC
bi210	8.88E+05	HAC
bk249	1.11E+06	HAC
tc97	1.11E+06	HAC
sc47	1.11E+06	HAC
ge71	1.11E+06	HAC
kr81	1.11E+06	HAC
nb93m	1.11E+06	HAC
te123	1.11E+06	HAC
te123m	1.11E+06	HAC
te125m	1.11E+06	HAC
ce139	1.11E+06	HAC
ce141	1.11E+06	HAC
zn72	1.11E+06	HAC
se72	1.11E+06	HAC
as73	1.11E+06	HAC
te118	1.11E+06	HAC
sb119	1.11E+06	HAC
yb166	1.11E+06	HAC
hf172	1.11E+06	HAC
ca45	1.11E+06	HAC
fe55	1.11E+06	HAC
mo93	1.11E+06	HAC
tc97m	1.11E+06	HAC
cd109	1.11E+06	HAC
cd113m	1.11E+06	HAC
sm113m	1.11E+06	HAC
sn119m	1.11E+06	HAC
sn121m	1.11E+06	HAC
i125	1.11E+06	HAC

Table 5.6.3-1 (Continued)

i129	1.11E+06	HAC
xe129m	1.11E+06	HAC
xe131m	1.11E+06	HAC
xe133m	1.11E+06	HAC
cs131	1.11E+06	HAC
ba135m	1.11E+06	HAC
ce144	1.11E+06	HAC
pm145	1.11E+06	HAC
pm147	1.11E+06	HAC
sm151	1.11E+06	HAC
eu155	1.11E+06	HAC
gd153	1.11E+06	HAC
tb157	1.11E+06	HAC
dy159	1.11E+06	HAC
er169	1.11E+06	HAC
tm170	1.11E+06	HAC
tm171	1.11E+06	HAC
hf182	1.11E+06	HAC
w181	1.11E+06	HAC
w185	1.11E+06	HAC
w188	1.11E+06	HAC
os191	1.11E+06	HAC
os194	1.11E+06	HAC
pt193	1.11E+06	HAC
pt193m	1.11E+06	HAC
pt195m	1.11E+06	HAC
au199	1.11E+06	HAC
hg203	1.11E+06	HAC
tl204	1.11E+06	HAC
pb205	1.11E+06	HAC
pb210	1.11E+06	HAC
ra225	1.11E+06	HAC
ra228	1.11E+06	HAC
ac227	1.11E+06	HAC
th229	1.11E+06	HAC
th232	1.11E+06	HAC
th234	1.11E+06	HAC
u236	1.11E+06	HAC

Table 5.6.3-1 (Continued)

u238	1.11E+06	HAC
np235	1.11E+06	HAC
np236	1.11E+06	HAC
np237	1.11E+06	HAC
pu241	1.11E+06	HAC
pu242	1.11E+06	HAC
pu246	1.11E+06	HAC
am242m	1.11E+06	HAC
cm245	1.11E+06	HAC
cm246	1.11E+06	HAC
cm248	1.11E+06	HAC
cf250	1.11E+06	HAC
cf251	1.11E+06	HAC
cf252	1.11E+06	HAC
te132	1.11E+06	HAC
nd140	1.11E+06	HAC
h3	1.11E+06	HAC
ni63	1.11E+06	HAC
co57	1.11E+06	HAC
sr89	1.11E+06	HAC
tc99	1.11E+06	HAC
sn113m	1.11E+06	HAC
am242	1.11E+06	HAC
tc99m	1.11E+06	HAC
c14	1.11E+06	HAC

6 CRITCALITY EVALUATION

This Section is NOT APPLICABLE. The RT-100 Cask Package will not have any fissile material subject to the requirements of 10 CFR Part 71 Sections 71.55 or 71.59. Therefore, no criticality evaluation was necessary for the application for the RT-100 Cask Package.

7 PACKAGE OPERATIONS

Chapter 7 describes the RT-100 operations during loading and preparation for shipment. These operations delineate the fundamental steps needed to ensure that the RT-100 is properly prepared for transport, and ensure that the operations are consistent with the previous sections of this application.

RT-100 loading and preparation operations are consistent with maintaining occupational radiation exposures as low as reasonably achievable (ALARA), as required by the "Standards for Protection Against Radiation" in 10 CFR 20.1101(b). RT verifies that the operating controls and procedures meet the requirements of 10 CFR Part 71; furthermore, the operating procedures are adequate to assure the RT-100 is operated in a manner consistent with the procedures and requirements of this Safety Analysis Report. The RT operating controls and procedures ensure the transportation safety with respect to the United States (US) requirements for transportation packages for radioactive material.

A separate operations manual will be prepared for the RT-100 to describe the operational steps in greater detail. The regulatory requirements for the operating controls and procedures evaluation from 10 CFR Part 71 include the following issues:

- Application identifies the established codes and standards used for the operating procedures in accordance to 10 CFR Part 71 Section 71.31(c).
- Application for a fissile material is not applicable for the RT-100 since it will not be used for fissile material transport.
- RT-100 shall be transported as a Type B shipment B(U)-96 exclusive use shipment.
- The shipper shall ensure that the routine determination of 10 CFR 71.87 is met prior to each shipment. Prior to delivery of a package to a carrier, RT will send to the consignee any special instructions needed to safely open the package and use it in accordance with 10 CFR 20.1906(e) and 10 CFR Part 71 Section 71.89.
- The operating procedures meet the regulatory requirements listed in the Preparation of Empty Package for Transport Section.
- The operating procedures are adequate to assure that the package will be operated in a manner consistent with the basis used for its safety evaluation.

Input from the other sections of this application was used to develop the RT-100 operations controls and procedures. Information flow for the operating procedures evaluation is shown in Figure 7-1.

Figure 7-1 Information Flow for the Operating Procedures Review

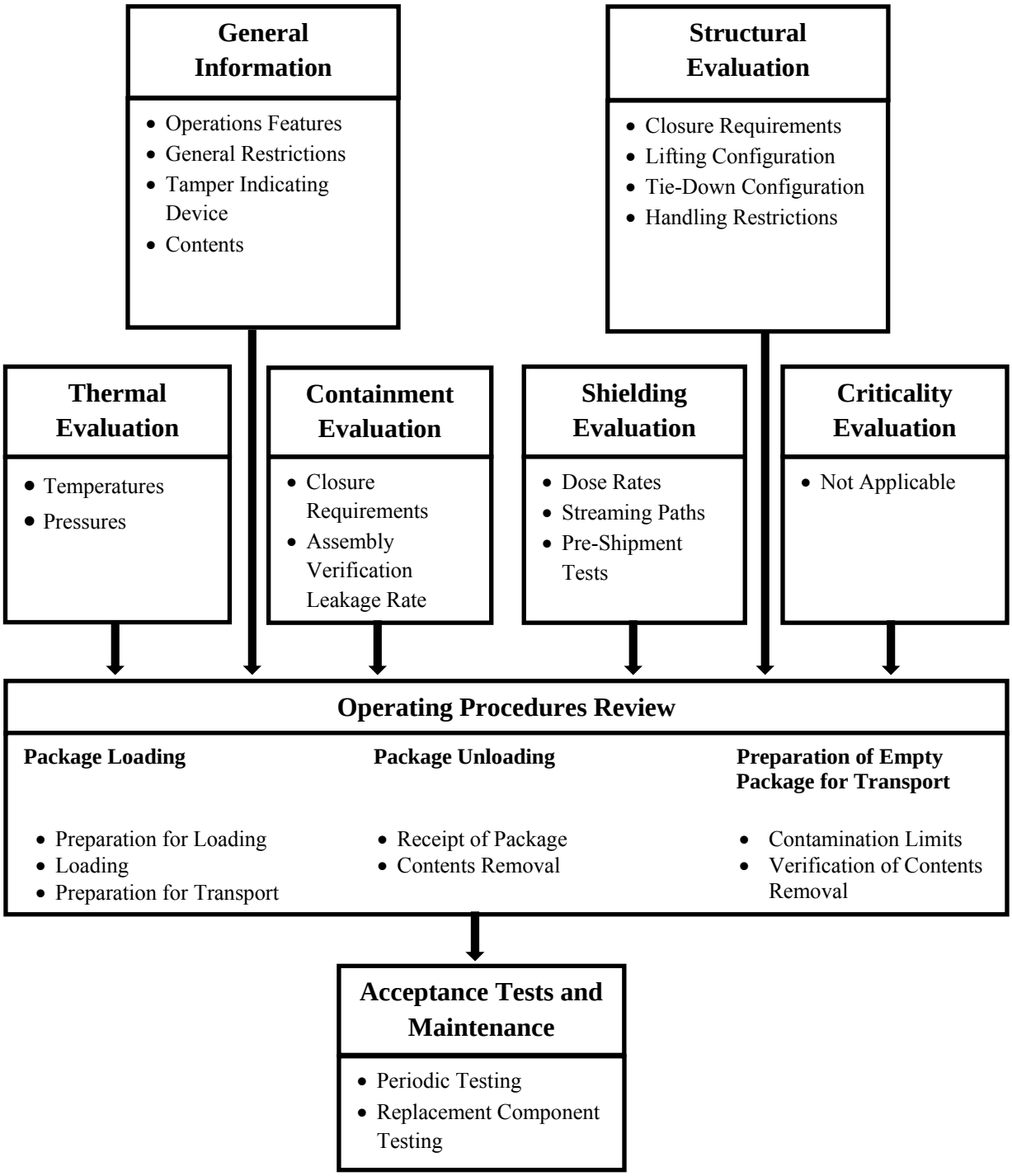

7.1 Package Loading

Section 7.1 describes loading-related preparations, tests, and inspections of the package. These actions include the inspections made before loading the package to determine that the

- Package is not damaged.
- Radiation and surface contamination levels are within allowable limits of the regulations.

The procedures for loading of the RT-100 are defined as follows:

- Preparation for loading
- Loading of contents
- Preparation for transport

Implementation of the above procedures ensures the safe opening, loading, and closing of the package. Also, use of these procedures includes a determination of any RT-100 damage and ensures that surface contamination levels are within regulatory limits.

7.1.1 Preparation for Loading

Loading the RT-100 is conducted in a vertical position and in an appropriate loading area. Loading of the RT-100 can be accomplished without removal from the trailer and with/without its lower impact limiter. If the RT-100 remains on the trailer, the trailer and lower impact limiter must be protected against contamination during this procedure.

The following actions are taken prior to loading operations:

- RT-100 is surveyed for surface radiation to ensure it is within allowable limits. If the package exceeds contamination limits, the RT-100 must be decontaminated prior to the next step.
- Perform a visual inspection to determine if any visible component damage has occurred that would prevent safe performance of the package under normal conditions of transport and hypothetical accident conditions. Any components out-of-specifications will be repaired or replaced.
- A pre-loading briefing is conducted with the Loading Team with the purpose of reviewing all procedures, and ensuring everyone is cognizant of the loading sequence and the attendant safety requirements. Pre-loading actions will include contamination control of the cask external surfaces, trailer and lower impact limiter.
- Review of package contents data ensures the contents meet the Certificate of Compliance.
- Operations will include any special controls and precautions for handling.

7.1.1.1 Package Removal from Trailer

Determine if the RT-100 is to be removed from the trailer. If so, refer to Section 7.5 for further description.

7.1.1.2 Lower Impact Limiter Removal

When required, remove the lower impact limiter in the following manner:

- Remove tamper indicating seal
- Remove the secure pins from each upper impact limiter bolt
- Loosen and remove all the head nuts (using appropriate tools) which secure the impact limiter to the cask body.
- Remove cask from lower impact limiter following the sequence described in Section 7.5.
- Install three lifting rings to the lower impact limiter using three (3) 120° distant studs. Remove the impact limiter using an appropriate lifting device attached to the three (3) lifting rings.

NOTE: To prevent damage, the impact limiter shall be handled and stored with care and will be placed on a flat clean surface.

7.1.1.3 Upper Impact Limiter Removal

Remove the upper impact limiter using the following steps:

- Remove tamper indicating seal(s) as required.
- Remove the secure pins from each upper impact limiter bolt.
- Loosen and remove all head nuts (using appropriate tools) which secure the impact limiter to the cask body.
- Install (if not already installed) three lifting rings to the upper impact limiter. . Remove the impact limiter using an appropriate lifting device attached to the three (3) lifting rings.

NOTE: To prevent damage, the impact limiter shall be handled and stored with care; furthermore, it will be placed on a flat clean in a position so that the studs and centering pins do not touch the ground.

7.1.1.4 Removal of Quick Disconnect Valve Cover Plate

Before opening the primary or secondary lid, internal and external pressure must be balanced in order to easily remove the lid(s).

Remove the quick disconnect valve cover plate from the RT-100 as follow:

- With appropriate tools, loosen and remove all bolts (6 bolts CHC M10) which secure the quick disconnect valve cover plate to the primary lid.

- Manually install two (2) of the six (6) bolts previously removed from the quick disconnect valve cover plate into two (2) threaded holes specially designed for this purpose, and remove the cover plate manually.
- Vent the cask cavity by connecting the quick disconnect valve to a leak tight ventilation system.

NOTE:
- The quick disconnect valve cover plate must be set down with caution to prevent damage.
- Treat the lid, cask cavity surfaces, bolts and seals as potentially contaminated.
- Every bolt or seal which shows any defect or sign of deterioration will be replaced by a new bolt or seal as specified in the Bill of Materials in Appendix 1-1 of Volume II, Proprietary Information.
- A leak test will be performed on each new inner seal replacement in accordance with Section 8.4 before loading.

7.1.1.5 Removal of the Primary Lid

Remove the primary lid from the RT-100 as follow:

- Using appropriate tools, loosen and remove all the bolts (32 bolts Hex M48) which secure the lid to the cask body.
- Torque the three (3) lid lifting rings in the threaded holes designed for this purpose on the upper side of the primary lid.
- Remove the primary lid using suitable lifting equipment attached to the three lifting rings.
- Inspect all bolts, bolt holes and seals for damage.

NOTES:
- The lid should be handled and stored with care to prevent damage.
- Treat the lid, cask cavity surfaces, bolts, and seals as potentially contaminated.
- Every bolt or seal which shows any defect or sign of deterioration will be replaced by a new bolt as specified in the Bill of Materials (Appendix 1-1).
- A leak test will be performed on each new inner seal in accordance with Section 8.4 before loading.
- Contact RT for any defect in the seal.
- The secondary lid is not required to be removed to remove the primary lid.
- To remove the secondary lid, proceed following the sequence described in Section 7.1.1.6.

7.1.1.6 Secondary Lid Removal

Remove the secondary lid from the RT-100 as follow:

- With appropriate tools, loosen and remove all the bolts (18 bolts Hex M36) which secure the secondary lid to the primary lid.
- Torque the three (3) lid lifting rings in the threaded holes designed for this purpose in the upper side of the secondary lid.
- Remove secondary lid using suitable lifting equipment attached to the three lifting rings.
- Inspect all bolts, bolt holes and seals for damage.

NOTES:

- The lid should be handled and stored with care in order to prevent damage.
- Treat the lid, cask cavity surfaces, bolts and seals as potentially contaminated.
- Bolts or seals which shows any defect or sign of deterioration are replaced as specified in the Bill of Materials in Appendix 1-1, Volume II, Proprietary Information.
- A leak test will be performed on each new inner seal in accordance with Section 8.4 before loading.
- Contact RT for any defect in the seal.

7.1.2 Loading of the RT-100

Section 7.1.2 addresses the actions for loading of the RT-100.

7.1.2.1 Content Loading

- Inspect the RT-100 interior for any damage, loose material or moisture. Clean seal surfaces.
- Radioactively contaminated liquids may be pumped out or removed by use of an absorbent material.
- Removal of any material from inside the cask will be performed under the supervision of qualified health physics personnel and in accordance with health & safety requirements.
- Verify that the package content meets the requirements of the RT-100 Certificate of Compliance.
- Address radiation detector uncertainty when measuring pre-shipment dose rates.
- Ensure the contents, secondary container, and packaging are chemically compatible, i.e., will not react to produce flammable gases.
- Pre-position any shoring necessary to shore/brace the liner during normal transit.
- Place disposable liner, drums or other containers into the pre-positioned shoring, and install additional shoring or bracing as necessary to restrict movement of contents during normal transport.
- Process liner as necessary and cap the liner using standard capping devices.
- Clean and inspect lid seal surfaces.

7.1.2.2 Primary Lid Replacement

The primary lid is mounted as follows below.

- Inspect and clean (if necessary) the two (2) seal surfaces on the top of the cask body and on the primary lid.
- Inspect and clean the two (2) primary lid O-rings for reuse. Contact Robatel Technologies if any damage, crack, or any condition is noted that can prevent O-rings from proper sealing.
- If not already present, install the three (3) lifting rings on the primary lid.
- Place the primary lid on the cask. The lid is positioned by a centering pin to ensure the proper placement of the primary lid on the cask body.
- Lubricate the thirty-two (32) bolts and bolt holes.
- Install the bolts with washers.
- Tighten the bolts using the "star pattern" method to ensure consistent pressure on the primary lid and cask body.
- Use an initial torque of 400 N.m $\pm$ 10%.
- Use a final torque of 850 N.m $\pm$ 10%.
- Remove the three (3) lifting rings from the primary lid.
- Conduct a seal leakage rate test of primary lid seals as written in Section 7.8.

7.1.2.3 Secondary Lid Replacement

The secondary lid is replaced in the following manner.

- Install the three (3) lifting rings on the secondary lid in the threaded holes designed for this purpose.
- Inspect and clean the two (2) seal surface on the top of the primary lid and on the secondary lid.
- Inspect and clean the two (2) seals on the secondary lid. Contact RT if any damage, crack, or any condition is noted that can prevent O-rings from proper sealing.
- Install the three (3) lifting rings on the secondary lid.
- Lubricate the eighteen (18) bolts and the bolt holes.
- Install the bolts with washers.
- Tighten the bolts using the "star pattern" method to ensure consistent pressure on the secondary and primary lids.
- Use an initial torque of 150 N.m $\pm$ 10%.
- Use a final torque of 350 N.m $\pm$ 10%.
- Remove the lifting rings from the secondary lid.
- Conduct a seal leakage rate test of secondary lid seals as written in Section 7.6.

7.1.2.4 Quick Disconnect Valve Cover Plate replacement

- The quick disconnect valve cover plate is replaced in the following manner.
- Inspect and clean the two (2) quick disconnect valve cover plate O-rings. Contact ROBATEL Technologies if any damage, crack, or any condition is noted that can prevent O-rings from proper sealing.
- Install manually two (2) of the six (6) bolts previously removed from the quick disconnect valve cover plate into the two (2) threaded holes specially designed for this purpose, and replace the cover plate manually on the primary lid. Subsequently, remove these two (2) bolts.
- Lubricate the six (6) quick disconnect valve cover plate bolts and the bolt holes.
- Secure the quick disconnect valve onto the primary lid using plate bolts and washers.
- Tighten bolts using the "star pattern" method to ensure consistent pressure on the quick disconnect valve and primary lid.
- Tighten the bolts by hand to compress the gaskets (no specific torque required).
- Use a final torque of 27 N.m $\pm$ 10%.
- Conduct a seal leakage rate test of quick disconnect valve cover plate seals as written in Section 7.6.

7.1.3 Preparation for Transport

The following general requirements are completed prior to final assembly of the RT-100.

- Contamination survey completed on the external surfaces to make sure the non-fixed (removable) radioactive contamination is as low as reasonable achievable and within the limits specified in 49 CFR 173.443 [Ref. 3]. If contamination is within limits, preparation for transport may be conducted. If contamination exceeds the limits, the RT-100 must be decontaminated until the contamination limits are met.
- Radiation survey conducted to ensure external radiation level specified in 10 CFR 71.47 [Ref. 2] are met. If radiation is within limits, preparation for transport may be taken.
- If radiation survey exceeds limits, the shipper must stop further loading operations and reconsider other options.
- Leak rate testing is performed prior to the RT-100 package shipment. This procedure is written in Section 7.6.

7.1.3.1 Replacement of Lower Impact Limiter

If previously removed, replace the lower impact limiter as follow:

- Verify that the lower impact limiter is correctly positioned and located in an appropriate area for installing the cask. The installation of the lower impact limiter can be conducted with the limiter already positioned on the transport trailer.
- Inspect and clean the lower impact limiter surface.

- Inspect each threaded stud for cleanliness, defects and lubrication – replace if necessary in accordance with Section 7.5.3.
- Install the spreader beam on the cask as written in Section 7.4.
- Lift cask with appropriate lifting equipment.
- Inspect and clean (if necessary) bottom surface of cask.
- Position the cask body using the two (2) lower impact limiter centering pins.
- Using caution, slowly lower the cask body to prevent from any damage to the lower impact limiter and the cask body.
- Secure cask on the lower impact limiter by installing the twelve (12) nuts on the threaded studs. The head nuts do not require any specific torque. The nuts must be in contact with the cask attachment ring.
- Install the spring pins on 12 threaded studs.
- Install a tamper indicating seal on one of the 12 spring pins.

Note: Reloading the Package onto the Trailer

- If the RT-100 was removed from the transport trailer, then place the RT-100 cask and lower impact limiter back on the trailer.
- Verify that the transport trailer is located in an appropriate area for loading.
- Install the spreader beam on the cask as written in Section 7.4 (upper impact limiter shall not be installed on the cask).
- Lift up the RT-100 cask onto the transport trailer as shown in Figure 7.1.3-1. Position the tie-down arms along the trailer as shown in Figure 7.1.3-1.
- Disconnect the spreader beam from the cask.
- Connect the four (4) tie-down arms to the trailer by the tie-down equipment.
- Tighten the tie-down equipment to ensure no movement of the RT-100 in every direction.

Figure 7.1.3-1 Loading of RT-100 on Transportation Trailer

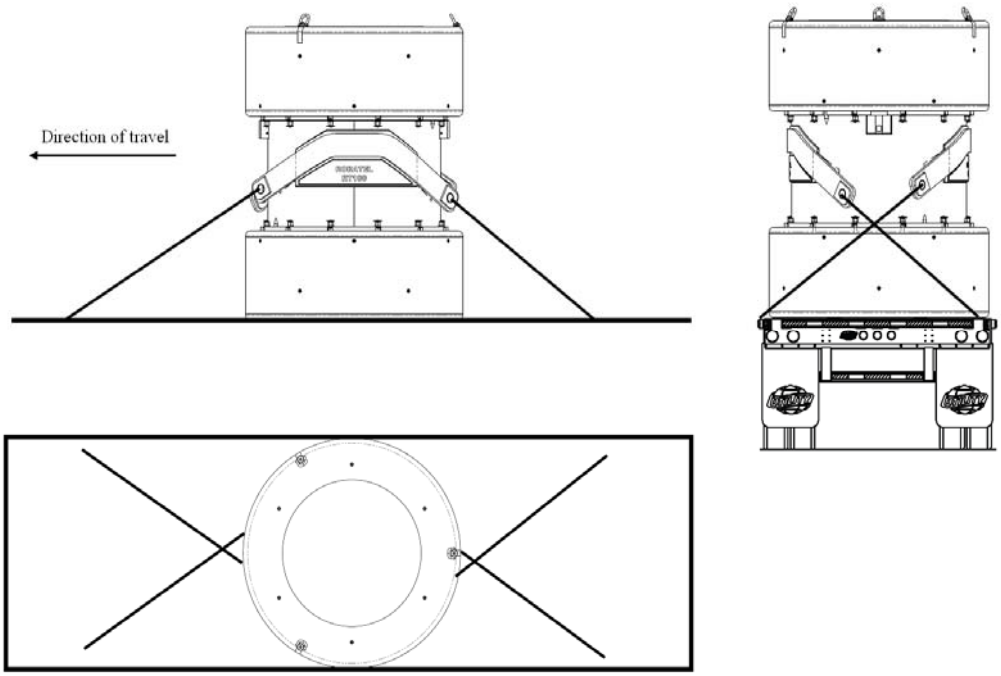

7.1.3.1 Replacement of the Upper Impact Limiter

Install the upper impact limiter using the following steps.

- Inspect and clean the top surface of the cask.
- Inspect each threaded stud for cleanliness, defects and lubrication – replace if necessary in accordance with Section 7.5.3.
- Lift the upper impact limiter using an appropriate lifting device fixed to its three (3) lifting rings.
- Position the upper impact limiter using the two (2) centering pins.
- Lower the upper impact limiter slowly and cautiously to prevent any damage to threaded studs and centering pins.
- Disconnect the lifting device from the upper impact limiter.
- Secure the cask to the upper impact limiter by installing twelve (12) head nuts on the threaded studs. The head nuts do not require any specific torque. The nuts must be in contact with the cask attachment ring.
- Install the secure pins on each threaded stud.
- Install a tamper indicating seal on one of the 12 spring pins.

7.1.4 Verification for Transport

The following actions are confirmed prior to shipment of a loaded package.

- Licensed consignee who expects to receive the package containing materials in excess of Type A quantities specified in 10 CFR 20.1906(a) [Ref. 8] meets and follows the requirements of 10 CFR 20.1906, as applicable.

- Trailer placarding and cask labeling meet DOT specifications (49 CFR 172).

- Provisions of 10 CFR 71.87 [Ref. 2].
- Radiation dose rates are in accordance with 10CFR71.47 [Ref. 2].
    - dose rates are $\leq$ 200 mrem/hr at package surface
    - dose rates are $\leq$ 10 mrem/hr at 2 meters from the vertical side of the trailer

- No temperature survey is required. SAR thermal analysis demonstrates that by meeting the 200W decay heat limit, the temperature requirement of 10 CFR 71.43(g) [Ref. 2] is met.

- Security seals are properly installed.

- Inspect the exterior of the cask for damage prior to shipping a loaded package. Contact RT if damage is present.

- Ensure RT-100 is correctly tied-down to the trailer.

7.2 Package Unloading

Section 7.2 addresses the unloading operations of the RT-100. In addition to the following sequence of events for unloading a package, packages containing quantities of radioactive material in excess of Type A quantities as specified in 10 CFR 20.1906(a) [Ref. 8] will be received, monitored, and handled by the licensed consignee in accordance with the requirements of 10CFR20.1906, as applicable. Identification of packages containing greater than Type A quantities can be made by review of the shipping papers accompanying the shipment.

7.2.1 Inspection at Package Receipt

The following inspection is conducted upon receipt of the RT-100 from the carrier.

- Perform visual examination of the unopened cask. Any damage will be reported to the shipper and actions taken to replace or repair any components that would jeopardize the integrity of the RT-100.
- Inspect the tamper indicating seals. Shipper will be notified and the shipment may be rejected by the consignee if the tamper seal has been removed or tampered with in any way. At the consignee discretion, the consignee may proceed to accept the RT-100 contents if the tamper indicating seal was damaged during shipment.
- Conduct contamination and radiation dose rate surveys to determine if the levels are within the specifications of DOT and NRC. If either of these surveys exceeds the limits, the shipper will be notified immediately, and the shipper will work with consignee (and DOT and NRC) to resolve the issue.
- Any proposed special controls and precautions for handling and unloading will be addressed according to the requirements of 10 CFR 20.1906 [Ref. 8], "Procedures for Receiving and Opening Packages".

7.2.2 Removal of Contents

The following procedures are used to remove the contents from the RT-100.

- Unloading conducted with the RT-100 in a vertical position and in an appropriate area approved by the Safety Officer for these types of operations.
- The RT-100 can be unloaded without being removed from the trailer and/or with the lower impact limiter in place. Determine if the RT-100 must be removed from the trailer. If so, refer to Section 7.4 for removal of the package.
- Remove the upper impact limiter in accordance with Section 7.1.1.3.
  Remove the quick disconnect valve cover plate and balance the interior and exterior pressures in accordance with Section 7.1.1.4.
- When necessary, remove the secondary lid in accordance with section 7.1.1.6.
- Remove the primary lid in accordance with section 7.1.1.5.
- Use appropriate lifting equipment to remove the RT-100 liner package.

- Care should be taken not to damage the cask or the sealing surfaces.
- Inspect the RT-100 interior for any damage, loose material or moisture. Clean seal surfaces.

NOTES:

- Pump radioactively contaminated liquids or remove by use of an absorbent material.
- Remove of any material from inside the cask under the supervision of qualified health physics personnel and following appropriate health & safety protocols.
- Inspect and clean two (2) seal surfaces on the top of the cask body and on the primary lid.
- Inspect and clean the two (2) primary lid O-rings. In case of damaged seal, contact RT.
- The RT-100 is transported as an overweight but not oversized package. No other transport restrictions are necessary.

7.3 Preparation of Empty Package for Transport

Section 7.3 describes the operations used to certify that the empty package is safe for transportation in accordance with 49 CFR 173.428, "Empty Class 7 (Radioactive) Material Packaging" [Ref. 4]. These operations must be completed before shipment of the RT-100.

- Confirm the cavity is empty of contents as far as practicable
- Survey the interior; decontaminate the interior if the limits of 10 CFR 173.428(e) [Ref. 4] are exceeded.

If previously removed, replace and secure the secondary and/or primary lid(s) in accordance with Sections 7.1.2.2 or 7.1.2.3.

- Replace and secure the quick disconnect valve cover it in accordance with Section 7.1.2.4.
- If previously removed, replace lower impact limiter in accordance with Section 7.1.3.1.
- If previously removed, replace RT-100 on the trailer in accordance with Section 7.1.3.1.
- Replace upper impact limiter in accordance with Section 7.1.3.2.
- Decontaminate the exterior surfaces of the cask, as necessary.
- Inspect the exterior and confirm it is unimpaired.

7.4 Package Removal from Trailer

Section 7.4 describes package removal from the trailer.

- Verify transport trailer is in appropriate area for unloading.
- Disconnect tie-down system.
- Remove upper impact limiter in accordance with Section 7.1.1.3.
- Install Spreader Beam
  - RT-100 spreader beam must be handled with its two (2) suitable lifting rings connected to the lifting crane.
  - Engage two (2) spreader beam arms in the cask lifting pockets. See Figure 7.4-1.
  - Connect arms in the lifting pockets by inserting the square shaped pin in each arm. See Figure 7.4-2
  - Secure by inserting the lock pin in the square shaped pin on the side of the cask lifting pockets and secure the lock pin with a spring pin. See Figure 7.4-3.

Figures are on next page.

Figure 7.4 -1 Spreader Beam Arm Positioned on Cask

Figure 7.4 -2 Spreader Beam Connections

Figure 7.4 -3 Spreader Beam Secured with Locking Pin

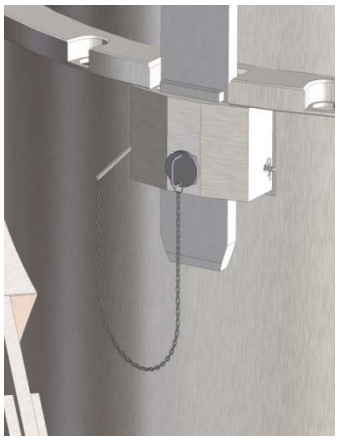

- Lift the RT-100 cask with or without the lower impact limiter attached from the transport trailer. See Figure 7.4 - 4.

Figure 7.4 - 4 Lift RT-100 with/without Lower Impact Limiter Installed

- Place the RT-100 cask with the lower impact limiter in an approved storage area. Care should be taken to prevent the cask assembly and the lifting equipment from any damage.
- Disconnect the spreader beam from the cask.

7.4.1 RT-100 Handling Safety Conditions

The SAR details the Operating Procedures for the RT-100 during normal conditions of transport. Additional required conditions are delineated below.

- All operating procedures in the Safety Analysis Report must be followed.
- RT-100 is not to be lifted by using the lifting rings on the upper impact limiter.
- RT-100 can only be lifted in the vertical position.
- RT-100 cannot be placed in an upside down position at any time.
- RT-100 cask shall not be handled when tied down

7.5 Tightening of Components

Section 7.5 addresses issues associated with components that require tightening.

7.5.1 Tightening Torques

Table 7.5.1-1 provides descriptive information and torque values for lid bolts.

Table 7.5.1-1 Lid Bolt Tightening Torques

Description	Dimensions	Number	Tightening Torque (N.m)
Primary lid bolts	Hex M48 x 140	32	850 ± 10%
Secondary lid bolts	Hex M30 x 90	18	350 ± 10%
Quick disconnect valve disconnect valve cover plate bolts	CHC M10 x 30	6	27 ± 10%

Table 7.5.1-2 provides descriptive information and torque values for other parts.

Table 7.5.2-2 Tightening Torques - Other Parts

Description	Dimensions	Number	Tightening Torque (N.m)
Primary Lid Centering Pin	M42	1	850 ± 10%
Secondary Lid Centering Pin	M24	1	200 ± 10%
Impact Limiter Studs	M36	24	-
Impact Limiter Nuts	HM36	24	-
Quick Disconnect Valve Cylindrical Plug	M10	1	20 ± 10%
Quick Disconnect Valve	G 3/8	1	50 +/-10%
Primary and Secondary Lid Leak Test Port Plug	M20	2	100 +/-10%

The lower and upper impact limiter nuts do not require any specific torque to ensure their function. Therefore, tightening torques on these nuts need not be controlled.

7.5.2 Threaded Bolts – Tightening Methods and Equipment

Threaded bolts and parts must be tightened to the torque limits specified in the Tables 7.5.1-1 and 7.5.2-2. Torque is to be accomplished using a torque wrench that displays the torque applied during tightening.

- Bolts and bolt holes must be cleaned prior to use.
- Bolt holes must be lubricated before bolts are placed into position for tightening.
- Bolts and nuts must be lubricated before tightening.
- Bolts tightened on the primary and secondary lids must use the “star pattern” that is to be conducted in a minimum of two evolutions:
  - First - step around 50% of required torque.
  - Second - step around at full required torque.

7.5.3 Replacement of the Impact Limiter Threaded Studs

When an impact limiter is removed from the cask body, the threaded studs will be inspected for cleanliness and defects. If a defect is noted, replace the threaded stud in the following manner:

- Remove the pin securing the threaded stud.
- Unscrew the threaded stud and remove it.
- Install a new threaded stud and tighten it by hand to align the stud and the embossing holes (no specific torque required).
- Install a new pin to secure the threaded stud.

7.6 Containment Seals Leakage Testing

Assembly verification leakage testing is performed in accordance with ANSI N14.5 requirements whenever the primary and/or secondary lids (or the quick disconnect valve cover plate) is removed or reassembled. The leakage rate test procedure recommended is described below (i.e., gas pressure rise approach). Another type of leakage rate testing is acceptable if it complies with RT-100 design and ensures every leakage testing requirement is met.

Primary lid, secondary lid, or quick disconnect valve cover plate seal Leakage Rate Test
This test is performed by gas pressure rise with a vacuum pump positioned on the primary lid leak test port.

- Remove the leak test port plug.
- Install a suitable vacuum pump on the leak test port.
- Create a vacuum in the annulus between the two (2) O-rings by pumping with the vacuum pump.
- Isolate the pump.
- Proceed to the gas pressure rise test by controlling the rising pressure in the cavity with a manometer. If the leakage rate is greater than the limit, inspect and clean the two seals, their support surface and the surface supporting either the primary lid, secondary lid or the quick disconnect valve cover plate; whichever is concerned.
- If damaged on seals or their supporting surfaces is noted, contact ROBATEL Technologies. Otherwise, perform the leak test operation.
- Remove the vacuum pump.
- Close the leak test port by replacing its plug.

7.7 References

1. Robatel Technologies, LLC, Quality Assurance Program for Packaging and Transportation of Radioactive Material, 10 CFR 71 Subpart H, Dated January 31, 2012 and NRC Approved on March 21, 2012

2. U.S. Nuclear Regulatory Commission, 10 CFR Part 71--PACKAGING AND TRANSPORTATION OF RADIOACTIVE MATERIAL, dated March 7, 2012 and the following specific Sections:

71.31(c)	71.45	71.47	71.47(b)(1)	71.89
71.87	71.47(b-d)	71.35(c)	71.43(g)	

3. U.S. Nuclear Regulatory Commission, Hazard Communications for Class 7 (Radioactive) Materials – Package and Vehicle Contamination Limits, 49 CFR 173.443.

4. U.S. Nuclear Regulatory Commission, Empty Class 7 (Radioactive) Materials Packaging, 49 CFR 173.428.

5. American National Standards Institute, ANSI N14.5-1997, "American National Standard for Radioactive Materials–Leakage Tests on Packages for Shipment," New York.

6. US Nuclear Regulatory Commission REGULATORY GUIDE 7.9 - Standard format and content of Part 71 applications for approval of packages for radioactive material.

7. U.S. Nuclear Regulatory Commission, "Guide for Preparing Operating Procedures for Shipping Packages," NUREG/CR-4775, July 1988.

8. U.S. Nuclear Regulatory Commission, 10 CFR Part 20--STANDARDS FOR PROTECTION AGAINST RADIATION, dated May 21, 1991 and the following specific Sections:

20.1101(b)	20.1906	20.1906(e), 20.1906(a)

7.8 Appendix 7

The following appendices are included for Chapter 7 information.

7.8.1 RT-100 Loading Table

Ultimately, the dose rate compliance of the RT-100 cask is ensured by limiting the maximum Ci/g of individual nuclides such that the sums of the per cents of maximum are less than 100 %. This demonstrated by the loading table which must be filled out by the user of the RT-100. The loading table has six columns as follows:

- Nuclide, maximum Ci/g from Table 5.6.3-1
- Ci/g loaded into the RT-100 cavity as provided by the user, % of maximum Ci/g, A_2, and fraction of A_2.
- Each radio-nuclide in the resin mixture is listed by row.
- The sum of column 4 (% of max) should be less than 100% for dose rate regulatory compliance and the sum of column 6 (C(i)/A(i)) should be less than 3000 A_2 for containment regulatory compliance.
- This is demonstrated for a typical mixture of resin nuclides in Calculation Package RTL-001-CALC-SH-0201 Exhibit A Tables 7-4 and 7-5, and for the maximum Co-60 content in Calculation Package RTL-001-CALC-SH-0201 Exhibit A Tables 7-6 and 7-7.
- Both content conditions are in compliance with the 10 CFR 71 dose rate and containment requirements.

Table 7.7.1-1 Resin Nuclides

TABLE 7.7.1-1 Resin Nuclides					
Project	RT-100 Transport Cask				
Task	Maximum Curies Per Gram Limits				
	Gamma Emitting Nuclides			Neutron Emitting Nuclides	Max.
	Nuclide	Max. Ci/g	Conditon	Nuclide	Max Ci/g
	na24	1.96E-05	NCT	pu242	4.90E-04
	bi208	2.39E-05	NCT	cm244	1.22E-03
	cs144	2.91E-05	NCT	cm242	3.91E-03
	y88	7.08E-05	NCT	cm243	5.36E-03
	la140	1.13E-04	NCT	pu238	6.70E-03
	sb124	1.59E-04	NCT	am241	6.83E-03
	eu156	1.82E-04	NCT	pu240	7.48E-03
	co60	2.48E-04	NCT	pu239	8.91E-03
	sc48	2.98E-04	NCT	all others	8.91E-03
	la138	3.45E-04	NCT		
	tb156	3.77E-04	NCT		
	lu169	3.81E-04	NCT		
	ag106m	3.92E-04	NCT		

	i124	4.02E-04	NCT		
	na22	4.62E-04	NCT		
	ag110m	4.93E-04	NCT		
	ca47	5.58E-04	NCT		
	br82	5.59E-04	NCT		
	as72	5.78E-04	NCT		
	lu172	5.89E-04	NCT		
	sb120m	6.13E-04	NCT		
	fe59	7.09E-04	NCT		
	tm172	7.65E-04	NCT		
	te131m	7.65E-04	NCT		
	ta182	7.91E-04	NCT		
	eu152	8.63E-04	NCT		
	eu154	8.66E-04	NCT		
	pm148	8.88E-04	NCT		
	sc46	9.90E-04	NCT		
	cs136	1.31E-03	NCT		
	ge69	1.41E-03	NCT		
	tb160	1.57E-03	NCT		
	sn125	1.79E-03	NCT		
	gd147	1.80E-03	NCT		
	sr83	1.84E-03	NCT		
	k40	1.95E-03	NCT		
	zn65	2.27E-03	NCT		
	rh102m	2.48E-03	NCT		
	as76	2.56E-03	NCT		
	tc96	3.26E-03	NCT		
	am240	4.07E-03	NCT		
	np238	4.51E-03	NCT		
	pr144	5.13E-03	NCT		
	rb84	5.23E-03	NCT		
	nb92	5.23E-03	NCT		
	tb158	5.57E-03	NCT		
	cs134	6.18E-03	NCT		
	rh99	6.50E-03	NCT		
	pa232	6.87E-03	NCT		
	tm165	8.57E-03	NCT		
	sb126	7.84E-03	NCT		

	zr89	9.19E-03	NCT		
	ho166m	8.70E-03	NCT		
	pm148m	8.75E-03	NCT		
	nb94	8.69E-03	HAC		
	tm168	9.44E-03	HAC		
	co58	9.69E-03	HAC		
	ru106	1.23E-02	NCT		
	as71	1.34E-02	NCT		
	rh102	1.38E-02	NCT		
	mn54	9.82E-03	HAC		
	ho166	1.66E-02	NCT		
	rb86	1.71E-02	NCT		
	cs132	2.43E-02	NCT		
	tc95m	1.84E-02	HAC		
	ag105	3.34E-02	NCT		
	tb153	3.64E-02	HAC		
	cd115m	3.82E-02	NCT		
	sb122	3.91E-02	HAC		
	lu171	3.05E-02	HAC		
	nb95	1.76E-02	HAC		
	sb127	3.33E-02	HAC		
	tc98	1.43E-02	HAC		
	te121m	4.86E-02	NCT		
	kr79	5.31E-02	NCT		
	ir194m	2.73E-02	HAC		
	zr95	2.58E-02	HAC		
	i126	4.22E-02	HAC		
	cu64	5.62E-02	HAC		
	ag108m	1.92E-02	HAC		
	gd149	4.00E-02	HAC		
	os185	5.26E-02	HAC		
	pm146	3.40E-02	HAC		
	as74	5.57E-02	HAC		
	ba131	5.90E-02	HAC		
	pm144	2.69E-02	HAC		
	pm143	4.56E-02	HAC		
	ce143	6.20E-02	HAC		
	br77	6.95E-02	HAC		

	sn123	9.41E-02	HAC		
	y91	9.78E-02	HAC		
	cs137	4.12E-02	HAC		
	pm151	7.54E-02	HAC		
	ag110	1.26E-01	HAC		
	au198	1.33E-01	HAC		
	te129m	1.57E-01	HAC		
	sb125	7.73E-02	HAC		
	rb83	7.66E-02	HAC		
	te121	6.16E-02	HAC		
	in114m	1.37E-01	HAC		
	cs129	1.64E-01	HAC		
	i131	1.25E-01	HAC		
	sr85	8.28E-02	HAC		
	ru103	8.37E-02	HAC		
	cm241	1.13E-01	HAC		
	ga67	4.79E-01	HAC		
	pm149	7.34E-01	HAC		
	y87	9.14E-02	HAC		
	ar37	1.69E-01	HAC		
	bi210m	2.13E-01	HAC		
	pt191	1.63E-01	HAC		
	hf181	1.08E-01	HAC		
	cd115	1.40E-01	HAC		
	ba140	1.53E-01	HAC		
	nd147	1.66E-01	HAC		
	ru97	6.94E-01	HAC		
	os193	5.96E-01	HAC		
	zr88	2.14E-01	HAC		
	cm247	2.27E-01	HAC		
	er172	2.36E-01	HAC		
	cf249	2.48E-01	HAC		
	in113m	3.27E-01	HAC		
	rh101m	3.03E-01	HAC		
	ba133	3.70E-01	HAC		
	hf175	3.75E-01	HAC		
	ni59	3.25E+00	HAC		
	be7	3.76E-01	HAC		

	lu177m	7.28E-01	HAC		
	th227	2.68E+00	HAC		
	ag111	2.20E+00	HAC		
	lu176	5.94E-01	HAC		
	re189	1.18E+00	HAC		
	re186	9.17E+00	HAC		
	pa233	7.66E-01	HAC		
	tm167	1.30E+00	HAC		
	ir192	8.53E-01	HAC		
	xe127	8.81E-01	HAC		
	se75	1.21E+00	HAC		
	nb95m	1.66E+01	HAC		
	ra223	1.90E+00	HAC		
	ta183	1.35E+00	HAC		
	eu149	1.91E+00	HAC		
	tb155	2.24E+00	HAC		
	yb175	1.91E+00	HAC		
	rh105	1.45E+00	HAC		
	rh101	2.04E+00	HAC		
	as77	3.44E+00	HAC		
	cr51	2.30E+00	HAC		
	kr85	8.93E+00	HAC		
	sm153	1.88E+01	HAC		
	yb169	3.14E+00	HAC		
	nb91	1.06E+01	HAC		
	sn126	7.42E+00	HAC		
	pa231	4.78E+00	HAC		
	te127m	6.56E+01	HAC		
	dy166	2.45E+01	HAC		
	np239	1.24E+01	HAC		
	la137	4.72E+01	HAC		
	po210	3.07E+02	HAC		
	sr90	1.32E+03	HAC		
	u235	7.10E+01	HAC		
	tb161	3.32E+01	HAC		
	u237	2.98E+01	HAC		
	ac225	3.02E+01	HAC		
	es253	2.96E+02	HAC		

	rn222	5.80E+01	HAC		
	ra224	1.16E+02	HAC		
	cu67	5.37E+01	HAC		
	u233	1.53E+03	HAC		
	cm242	2.14E+03	HAC		
	am243	3.74E+02	HAC		
	am241	1.26E+03	HAC		
	es254	8.62E+01	HAC		
	cm244	2.35E+03	HAC		
	lu177	1.37E+02	HAC		
	sn113	1.32E+03	HAC		
	pu238	6.87E+03	HAC		
	th228	1.55E+04	HAC		
	pd103	1.02E+03	HAC		
	pu239	5.10E+03	HAC		
	pu236	6.24E+03	HAC		
	cl36	1.41E+03	HAC		
	cm243	1.19E+03	HAC		
	sm145	1.82E+03	HAC		
	ra226	5.60E+03	HAC		
	v49	3.74E+03	HAC		
	u232	2.10E+04	HAC		
	pu240	5.16E+04	HAC		
	xe133	7.61E+03	HAC		
	u230	4.95E+04	HAC		
	th231	2.99E+04	HAC		
	pu237	4.31E+04	HAC		
	u234	5.68E+04	HAC		
	pr143	2.18E+05	HAC		
	ca41	7.43E+04	HAC		
	sn117m	1.08E+05	HAC		
	th230	4.34E+05	HAC		
	mo99	5.96E+05	HAC		
	bi210	8.88E+05	HAC		
	bk249	1.11E+06	HAC		
	tc97	1.11E+06	HAC		
	sc47	1.11E+06	HAC		
	ge71	1.11E+06	HAC		

	kr81	1.11E+06	HAC		
	nb93m	1.11E+06	HAC		
	te123	1.11E+06	HAC		
	te123m	1.11E+06	HAC		
	te125m	1.11E+06	HAC		
	ce139	1.11E+06	HAC		
	ce141	1.11E+06	HAC		
	zn72	1.11E+06	HAC		
	se72	1.11E+06	HAC		
	as73	1.11E+06	HAC		
	te118	1.11E+06	HAC		
	sb119	1.11E+06	HAC		
	yb166	1.11E+06	HAC		
	hf172	1.11E+06	HAC		
	ca45	1.11E+06	HAC		
	fe55	1.11E+06	HAC		
	mo93	1.11E+06	HAC		
	tc97m	1.11E+06	HAC		
	cd109	1.11E+06	HAC		
	cd113m	1.11E+06	HAC		
	sm113m	1.11E+06	HAC		
	sn119m	1.11E+06	HAC		
	sn121m	1.11E+06	HAC		
	i125	1.11E+06	HAC		
	i129	1.11E+06	HAC		
	xe129m	1.11E+06	HAC		
	xe131m	1.11E+06	HAC		
	xe133m	1.11E+06	HAC		
	cs131	1.11E+06	HAC		
	ba135m	1.11E+06	HAC		
	ce144	1.11E+06	HAC		
	pm145	1.11E+06	HAC		
	pm147	1.11E+06	HAC		
	sm151	1.11E+06	HAC		
	eu155	1.11E+06	HAC		
	gd153	1.11E+06	HAC		
	tb157	1.11E+06	HAC		
	dy159	1.11E+06	HAC		

	er169	1.11E+06	HAC		
	tm170	1.11E+06	HAC		
	tm171	1.11E+06	HAC		
	hf182	1.11E+06	HAC		
	w181	1.11E+06	HAC		
	w185	1.11E+06	HAC		
	w188	1.11E+06	HAC		
	os191	1.11E+06	HAC		
	os194	1.11E+06	HAC		
	pt193	1.11E+06	HAC		
	pt193m	1.11E+06	HAC		
	pt195m	1.11E+06	HAC		
	au199	1.11E+06	HAC		
	hg203	1.11E+06	HAC		
	tl204	1.11E+06	HAC		
	pb205	1.11E+06	HAC		
	pb210	1.11E+06	HAC		
	ra225	1.11E+06	HAC		
	ra228	1.11E+06	HAC		
	ac227	1.11E+06	HAC		
	th229	1.11E+06	HAC		
	th232	1.11E+06	HAC		
	th234	1.11E+06	HAC		
	u236	1.11E+06	HAC		
	u238	1.11E+06	HAC		
	np235	1.11E+06	HAC		
	np236	1.11E+06	HAC		
	np237	1.11E+06	HAC		
	pu241	1.11E+06	HAC		
	pu242	1.11E+06	HAC		
	pu246	1.11E+06	HAC		
	am242m	1.11E+06	HAC		
	cm245	1.11E+06	HAC		
	cm246	1.11E+06	HAC		
	cm248	1.11E+06	HAC		
	cf250	1.11E+06	HAC		
	cf251	1.11E+06	HAC		
	cf252	1.11E+06	HAC		

	te132	1.11E+06	HAC		
	nd140	1.11E+06	HAC		
	h3	1.11E+06	HAC		
	ni63	1.11E+06	HAC		
	co57	1.11E+06	HAC		
	sr89	1.11E+06	HAC		
	tc99	1.11E+06	HAC		
	sn113m	1.11E+06	HAC		
	am242	1.11E+06	HAC		
	tc99m	1.11E+06	HAC		
	c14	1.11E+06	HAC		

Table 7.7.1-2 Maximum Co-60 Contents

	NCT Maximum Dose Rate per Curie Responses					**NCT Summary**			
	Nuclide	Surface	2 Meter	Cab		Nuclide	Surface	2 Meter	Cab
	pu242	9.59E-02	6.48E-03	1.41E-03		pu242	3.45E-05	2.33E-06	5.09E-07
	cm244	4.00E-02	2.61E-03	5.71E-04		cm244	2.92E-04	1.90E-05	4.17E-06
	cm242	1.24E-02	8.13E-04	1.80E-04		cm242	7.46E-04	4.89E-05	1.08E-05
	cm243	8.87E-03	5.93E-04	1.30E-04		cm243	4.05E-04	2.71E-05	5.95E-06
	pu238	6.95E-03	4.75E-04	1.02E-04		pu238	2.54E-04	1.73E-05	3.73E-06
	am241	7.01E-03	4.65E-04	1.01E-04		am241	5.26E-04	3.49E-05	7.61E-06
	pu240	6.30E-03	4.25E-04	9.34E-05		pu240	8.44E-05	5.70E-06	1.25E-06
	pu239	5.37E-03	3.57E-04	7.85E-05		pu239	1.74E-04	1.16E-05	2.55E-06

						Sum	0.00	0.00	0.00
	Bottom								
	Nuclide	Surface	2 Meter			Nuclide	Surface	2 Meter	
	pu242	1.84E-02	2.54E-03			pu242	6.63E-06	9.13E-07	
	cm244	7.00E-03	9.20E-04			cm244	5.11E-05	6.71E-06	
	cm242	2.15E-03	2.62E-04			cm242	1.29E-04	1.58E-05	
	cm243	1.50E-03	1.86E-04			cm243	6.88E-05	8.52E-06	
	pu238	1.33E-03	1.56E-04			pu238	4.85E-05	5.70E-06	
	am241	1.29E-03	1.56E-04			am241	9.66E-05	1.17E-05	
	pu240	1.12E-03	1.42E-04			pu240	1.50E-05	1.90E-06	
	pu239	1.04E-03	1.38E-04			pu239	3.39E-05	4.47E-06	
						Sum	0.00	0.00	
	Top					Top			
	Nuclide	Surface	2 Meter			Nuclide	Surface	2 Meter	
	pu242	4.54E-03	4.39E-04			pu242	1.64E-06	1.58E-07	
	cm244	1.58E-03	2.31E-04			cm244	1.15E-05	1.68E-06	
	cm242	4.11E-04	9.29E-05			cm242	2.47E-05	5.58E-06	
	cm243	3.00E-04	6.21E-05			cm243	1.37E-05	2.84E-06	
	pu238	2.38E-04	4.43E-05			pu238	8.67E-06	1.62E-06	
	am241	2.40E-04	4.14E-05			am241	1.80E-05	3.10E-06	
	pu240	1.77E-04	3.16E-05			pu240	2.37E-06	4.23E-07	
	pu239	1.72E-04	2.52E-05			pu239	5.60E-06	8.18E-07	
						Sum	0.00	0.00	
	HAC Maximum Dose Rate per Curie Responses					**HAC Summary**			
	Side					Side			
	Nuclide	1 Meter				Nuclide	1 Meter		
	pu242	2.18E-02				pu242	7.86E-06		
	cm244	8.81E-03				cm244	6.43E-05		
	cm242	2.74E-03				cm242	1.64E-04		
	cm243	1.99E-03				cm243	9.09E-05		

	pu238	1.58E-03				pu238	5.76E-05		
	am241	1.57E-03				am241	1.18E-04		
	pu240	1.42E-03				pu240	1.91E-05		
	pu239	1.20E-03				pu239	3.90E-05		
						Sum	0.00		
	Bottom					Bottom			
	Nuclide	1 Meter				Nuclide	1 Meter		
	pu242	1.90E-02				pu242	6.83E-06		
	cm244	7.33E-03				cm244	5.35E-05		
	cm242	2.45E-03				cm242	1.47E-04		
	cm243	1.84E-03				cm243	8.39E-05		
	pu238	1.33E-03				pu238	4.84E-05		
	am241	1.28E-03				am241	9.60E-05		
	pu240	1.25E-03				pu240	1.67E-05		
	pu239	1.08E-03				pu239	3.52E-05		
						Sum	0.00		
	Top					Top			
	Nuclide	1 Meter				Nuclide	1 Meter		
	pu242	8.48E-03				pu242	3.05E-06		
	cm244	3.28E-03				cm244	2.40E-05		
	cm242	1.10E-03				cm242	6.59E-05		
	cm243	7.83E-04				cm243	3.58E-05		
	pu238	6.37E-04				pu238	2.33E-05		
	am241	5.89E-04				am241	4.42E-05		
	pu240	5.73E-04				pu240	7.67E-06		
	pu239	5.07E-04				pu239	1.65E-05		
						Sum	0.00		

8 ACCEPTANCE TESTS AND MAINTENANCE PROGRAM

Fabrication of the RT-100 must meet the acceptance test requirements of Subpart G of 10 CFR Part 71[Ref. 2]. In addition, a maintenance program is used to assure packaging performance and Certificate of Compliance requirements during service life. Both the acceptance tests and maintenance program are conducted under the Robatel Quality Assurance (NQA-1) Program [Ref. 1]. Figure 8-1 shows flow of information for acceptance tests and maintenance program.

Figure 8-1 Flow Information for the Acceptance Tests and Maintenance Program Review

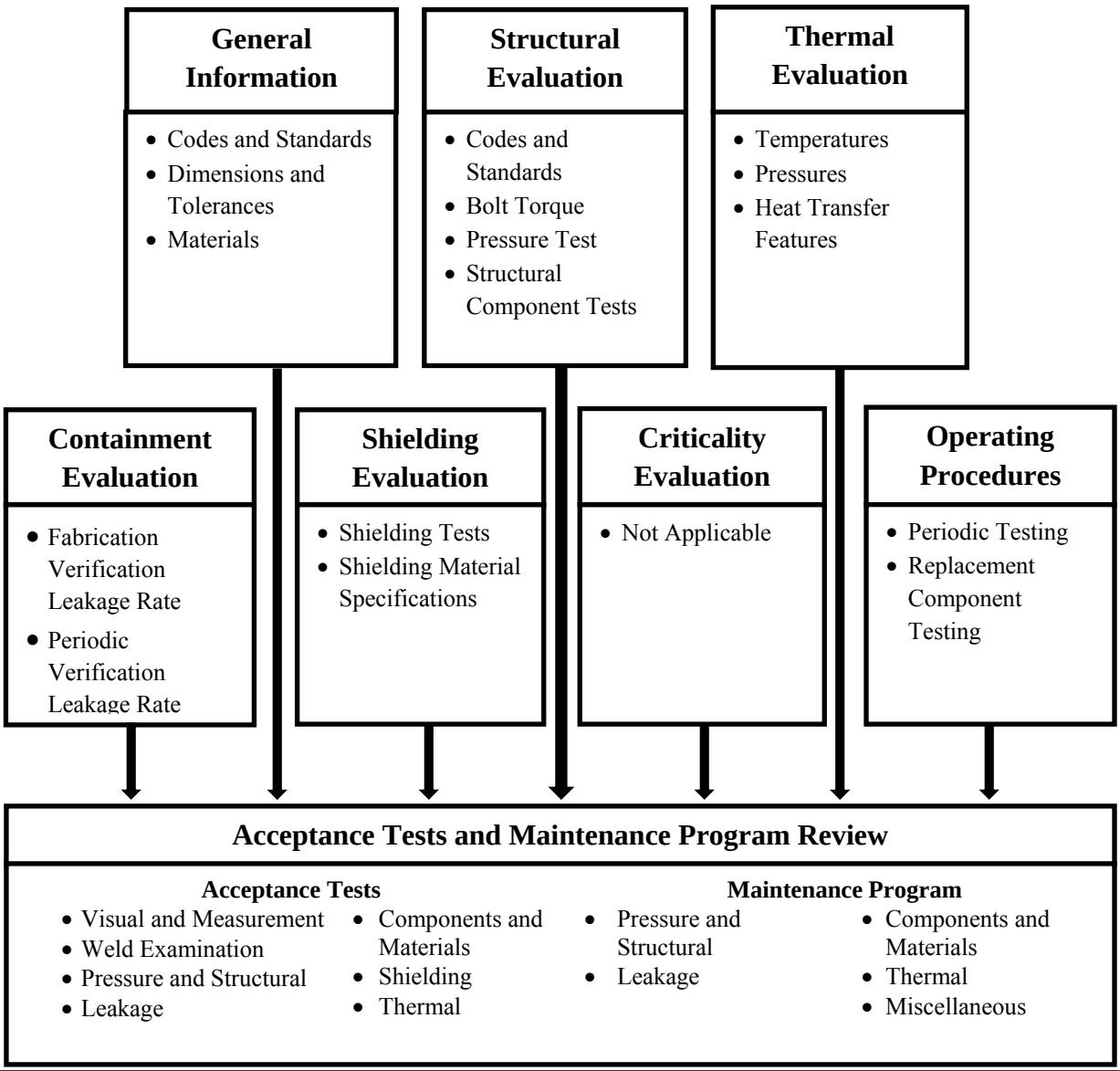

8.1 Acceptance Tests

The RT-100 is designed and will be fabricated using the acceptance criteria of Reg. Guide 7.9 [Ref. 1] and the regulatory requirements of 10 CFR Part 71 [Ref. 2].

Requirements for the acceptance testing include the following criteria:

- The SAR identifies codes, standards, and provisions of the quality assurance program used for the acceptance testing of the packaging in accordance with 10 CFR Part 71 Sections 71.31(c), and 71.37(b) [All Ref. 2]. The SAR and fabrication are prepared in accordance with the Robatel Technologies, LLC Quality Assurance Program for 10CFR71 Subpart H (which has been approved by the USNRC on 22 March 2012) which addresses all aspects of the SAR activities.
- The fabrication of the RT-100 is verified to be in accordance with the approved design and in accordance with 10 CFR Part 71 Section 71.85(c) [Ref. 2].
- The RT-100 is inspected for cracks, pinholes, uncontrolled voids, or other defects that could significantly reduce its effectiveness in accordance with 10 CFR Part 71 Section 71.85(a) [Ref. 2].
- The maximum normal operating pressure of the RT-100 exceeds 35 kPa (5 psi) gauge. Prior to first use, the cask will be tested at an internal pressure at least 150% of the maximum normal operating pressure to verify its ability to maintain structural integrity at that pressure in accordance with 10 CFR Part 71 Section 71.85(b) [Ref. 2].
- The RT-100 is conspicuously and durably marked with its model number, serial number, gross weight, and a package identification number assigned by the NRC in accordance with 10 CFR Part 71 Section 71.85(c) [Ref. 2].
- Robatel Technologies, LLC performed any and all tests deemed appropriate by the NRC in accordance with 10 CFR Part 71 Section 71.93(b) [Ref. 2].
- RT-100 is fabricated in accordance with the drawings listed in the Certificate of Compliance.

General Notes

- A leak test is performed before each loading of the RT-100 cask transport package. This test is conducted when the cask is breached by either the primary lid, secondary lid or the quick disconnect valve cover. A leak test on these parts is not necessary if the secondary lid or quick disconnect valve cover have not been opened.
- All disassembled parts will be reassembled in accordance with the Safety Analysis Report. In particular, this requirement applies to the bolts and nuts tightening, and the torques applied.

- During disassembly and assembly, cleanliness of surfaces is of highest priority. In particular, this requirement applies to the seals and seal surfaces.
- Seals will be replaced within a 12 month period of use per Reg. Guide 7.9.
  - The RT-100 has two (2) seals associated with each of the primary lid, secondary lid, and quick disconnect valve.
  - Replaced seals will be leak tested.

8.1.1 Visual Inspections and Measurements

Throughout the fabrication process, confirmation by visual examination and measurement are required to verify that the RT-100 packaging dimensionally conforms to the drawings as provided in Appendix 1. In addition, the packaging is to be visually examined for any adverse conditions in materials or fabrication that would prevent the package from being assembled or operated in accordance with Chapter 7.0 or tested in accordance with the requirements of Chapter 8.0.

8.1.2 Weld Examinations

Containment boundary welds identified on drawing 1-3 in Appendix 1, Volume II, Proprietary Information are required to be inspected and furthermore, required to meet the acceptance requirements of ASME Code, Section III, Division I, Subsection ND, Article ND-5000 [Ref. 9].

The Containment Boundary welds shown on the weld map drawing 1-3 in Appendix 1, Volume II, Proprietary Information will be inspected by radiographic examination (RT) in accordance with ASME Code Section III - Subsection ND-5000 [Ref. 9]. Weld acceptance is accordance with ASME Code, Section III**,** Division I, Subsection ND5000. The weld maps in Appendix 1, Volume II, Proprietary Information state the examination to which each weld will be submitted: radio testing (RT), Dye penetrant testing (PT), or visual testing (VT) in accordance with the ASME applicable sections for examination and criteria.

8.1.3 Structural and Pressure Tests

A pressure test of the containment system is performed as required by 10CFR71.85. As described in Section 3.3.2, maximum normal operating pressure for the cask cavity is 182.7 kPa; for conservatism, the minimum test pressure is 1.5 x 200 = 300 kPa. The hydrostatic test pressure is held for a minimum of 10 minutes prior to initiation of any examinations. During the hold time, the primary lid and secondary lid closures are examined for leakage.

Except from temporary connections, leaks are remedied, and the test and inspection are repeated. After depressurization and draining, the cask cavity and seal areas are visually inspected for cracks and deformation. Any cracks or deformation are remedied, and the test and inspection repeated.

8.1.4 Leakage Tests

Leakage rate testing is performed by a trained and qualified person in accordance with ANSI N14.5-1997 [Ref. 3]. The Fabrication Leakage Test is performed prior to acceptance and operation of the package.

8.1.4.1 General Requirements

Testing Method - Per ANSI N-14.5 [Ref. 3], conducted in accordance with ASTM E-499 [Ref. 10] if using a helium leak detector, or in accordance with other approved procedures using different leak detector gases.

Test Sensitivity - the test method must be capable of meeting the appropriate sensitivity requirements specified in Table 4.4-1. Calibration of the leak detector will be performed using an appropriate leak rate standard. The leak standard's setting will correspond to the approved leak test rate (see Section 4.0). Any condition, which results in leakage in excess of the maximum allowable leak rate specified in Table 4.4-1 (test gas dependent) will be corrected and re-tested.

8.1.4.2 Leakage Test Procedure

Testing of the cask body containment boundary is performed prior to the lead shield pour to allow access to all containment welds. The body containment boundary includes the inner shell, the cask forged bottom, and the upper flange.

Other parts of the containment boundaries (lids, the inner O-ring of both lids, and the quick disconnect valve cover plate and its inner O-ring) may be tested on the cask body during a second test following the same procedure, depending on sub-assembly fabrication schedule.

- (Optional) Insert the sealed metal cavity filler canister into the cask cavity. Verify the canister does not obstruct the vent penetration. The metal will be chemically compatible with the cask body material and the test gas.
- Assemble the cask lids per Section 7. Note: a substitute sealed plate may be used in the event the cask lid(s) are unavailable. Sealing the substitute plate is performed on the top surface of the upper flange; the plate material will be chemically compatible with the cask body material and the test gas.
- Evacuate the cask cavity to 0.7 atm vacuum, minimum (sealed metal cavity filler canister may be used within the cask cavity).
- Pressurize the cask cavity to a minimum pressure of 1.1 atm with pure helium (other leak detector gas with appropriate pressure might be used).
- Check for leakage of the inner shell and base plate components.
- Measure the leakage of the inner (containment) O-ring via the test port in each lid.
- Check for leakage at the vent port.

8.1.4.3 Leakage Rate Criteria

The acceptance leakage rate testing is performed in accordance with the criteria specified in Section 4.4 for the SAR (Figure 4.4-1, Fabrication).

8.1.5 Component and Material Tests

The RT-100 is fabricated using industry wide procurement practices for the materials. All materials undergo extensive testing to meet the ASME standards of the materials specifications. These specifications (including ASME standards) are part of the procurement process to ensure component materials will meet or exceed nuclear industry practices.

To confirm that acceptance criteria are met, different materials used for the fabrication of the RT-100 are procured in accordance with Robatel Quality Assurance Program. Materials not meeting the Robatel Quality Assurance standards are replaced. Any materials replacing the originally purchased component parts are subject to the same testing to ensure specifications are maintained.

8.1.6 Shielding Tests

The RT-100 is designed to provide sufficient shielding to meet or exceed NRC and DOT requirements for a Type B (U)-96 package. Specifically, the RT-100 design includes gamma radiation shielding to meet 10 CFR Part 71during both normal transport conditions and hypothetical accident conditions.

Shielding integrity of the RT-100 is tested using nondestructive examination techniques (e.g., gamma scanning method) to ensure there are neither direct radiation streams nor voids greater than the acceptance criteria in the lead shield annulus. The acceptance criterion is defined as follows: measurements indicate that no lead layer is less than the minimum specified on the drawing. Any results not meeting this requirement are remedied, and the test and inspection is repeated.

8.1.7 Thermal Tests

RT does not envision any thermal acceptance testing on the RT-100. Refer to the thermal evaluation of the RT-100 described in Chapter 3 of the SAR.

8.1.8 Miscellaneous Tests

No miscellaneous tests are to be performed on the RT-100 package.

8.2 Maintenance Program

The RT-100 is subjected to routine inspection and periodic maintenance in order to ensure its compliance with this SAR and the required standards by the NRC. In addition, the requirements of the RT Quality Assurance Program are used to determine when maintenance is needed.

- The SAR identifies codes, standards, and provisions of the quality assurance program used for the maintenance of the RT-100 in accordance with 10 CFR Part 71 Sections 71.31(c), and 71.37(b) [Ref. 2]. The RT Quality Assurance Program addresses all criteria of 10 CFR Part 71 [Ref. 2].
- The RT-100 is maintained in an unimpaired physical condition except for superficial defects such as marks or dents in accordance with 10 CFR Part 71 Section 71.87(b) [Ref. 2]. Any major changes to the RT-100 will result in an evaluation for repair/ replacement of damaged parts.
- The presence of any moderator or neutron absorber, if required, in a fissile material package is "not applicable" for the RT-100 since it will not transport fissile material in accordance with 10 CFR Part 71 Section 71.87(g) [Ref. 2].
- RT will perform any and all tests deemed appropriate by the NRC in accordance with 10CFR71 Section 71.93(b) [Ref. 2]. NRC is permitted to perform tests on the RT-100 that it deems necessary.
- A maintenance program is part of the operational procedures to assure that the package performs as intended throughout its service life.

Any RT-100 that does not comply with the specifications and verifications of the SAR is taken out of service until the corrective action(s) have been completed. All corrective actions are reported to the RT, the NRC, and approved RT-100 Users.

8.2.1 Maintenance During Normal Use

Maintenance during normal use is performed to ensure that the RT-100 continues to meet design specifications and functions.

Visual Inspection of the RT-100

Each time the RT-100 goes through the cycle of loading and unloading, the following visual inspections and maintenance are performed.

- Inspect and record the condition of the exterior of the lower and upper impact limiters, as well as, bolts, nuts, secure pins, threaded studs and tamper indicating seals. Replace as necessary.
- Inspect and record the condition of cask attachment ring welds. Repair as necessary.
- Inspect and record condition of the cask lifting pocket welds. Repair as necessary.
- Inspect and record the readability of the RT-100 labeling. Repair if necessary.

Visual Inspection of Dismantled Components
Each time any component of the RT-100 is disassembled, a visual inspection is performed before reassembly.

- Inspect each major component exterior surface (i.e., primary lid, secondary lid, or quick disconnect valve cover plate) for cleanliness and defects – repair as necessary.
- Inspect each threaded stud, bolt and washer for cleanliness and defects and lubricate – replace as necessary.
- Inspect the RT-100 seals and check maintenance records to ensure the seals are within the 24 month replacement period. If replacement is necessary, contact RT and perform a leakage rate test after seal replacement.

8.2.2 Periodic Maintenance Every 12 Months

Inspections, tests and maintenance are performed every twelve months of cask service as required in accordance with the SAR and NRC compliance requirements.

RT-100 Overall Inspection
A visual inspection of the exterior surfaces of the cask is performed to determine if any damage has been incurred during the previous twelve months, and the results of the survey documented. This inspection is completed prior to RT-100 dismantlement for detailed inspection. The major components and items to be inspected include the following items:

- Lower and upper impact limiters
- RT-100 body
- Condition of the fusible plugs in the impact limiters
- Condition and readability of RT-100 markings

RT-100 Inspection and Maintenance
Subsequent to the overall inspection, the RT-100 is disassembled into the following parts as described in Chapter 7:

- Upper impact limiter
- Lower impact limiter
- Primary lid
- Secondary lid
- Quick disconnect valve cover plate
- Quick disconnect valve
- Leak test port plugs
- Cask body
- Seals

Cask exterior surfaces and cavity welds are inspected visually within a twelve month period; this inspection is to verify that the welds specified by the applicable cask drawing are present, and that no obvious weld defects are visible.

The primary lid, secondary lid and Quick disconnect valve cover plate seals seated surfaces are cleaned and new seals installed every fifty (50) cycles, or at least every twelve (12) months. Any damaged seals are immediately replaced.

8.2.3 Leakage tests

The RT-100 is reassembled and tested after the twelve month inspection and maintenance of components has been completed. The leakage rate testing is performed in accordance with Chapter 4 requirements.

8.2.3.1 Periodic and Maintenance Leak Test

The RT-100 is leak tested as described below within the preceding12-month period before an actual shipment; in addition, it is leak tested after maintenance, repair (such as weld repair), or replacement of components of the containment system.

The RT-100 seals are replaced within the 12-month period before an actual shipment.

General requirements:
Testing method - Per ANSI N-14.5 [Ref. 3], conducted in accordance with ASTM E-499 [Ref. 10] if using a helium leak detector, or in accordance with other approved procedures using different leak detector gases.

Test Sensitivity - the test method must be capable of meeting the appropriate sensitivity requirements specified in Table 4.4-1. Calibration of the leak detector is performed using a leak rate appropriate standard. The leak standard setting will correspond to the approved leak test rate (see Section 4.0).

Any condition which results in leakage in excess of the maximum allowable leak rate specified in Table 4.4-1 (depending on the test gas used) is corrected and re-tested.

Leak testing is conducted on the fully assembled cask following the steps in Section 8.1.4 of this SAR. The applicable leak testing criteria are described in Chapter 4.

8.2.3.2 Pre-Shipment Leakage Test

A pre-shipment Leakage test is required before each shipment of Type B material quantities. The test verifies that the containment system has been assembled properly.

Note: The pre-shipment leak test is not required before a shipment if the contents meet the definition for low specific activity materials or surface contaminated objects as stated in 1OCFR71.4, and also meet the exemption standard for low specific activity materials or surface contaminated objects as stated in 1O CFR 71.14(b)(3)(i) [Ref. 2].

Leakage tests are conducted in accordance with the Section 7.6 protocol and using the applicable Chapter 4 criteria as allowable limits.

8.2.4 Structural Tests

At least every four (4) years, testing is performed on the cask body lifting elements (lifting pockets). At the same time, examination of the inner shell visible welds parts on the cask body is performed in addition to the periodic maintenance every twelve (12) months.

A static "loading" test is performed on the lifting pocket with a force equivalent to 150% of the maximum load for a period of 10 minutes in accordance with ANSI N14.6 [Ref. 7]. After the static load test, testing of the lifting pockets and welds integrity are performed using dye penetrant or ultrasonic methods; results are documented. Any results not meeting the ASME Code Section III, Subsection NF [Ref. 11] requirement are remedied, and the test and inspection are repeated.

Each containment weld is inspected from the inner surface using dye penetrant methods to detect cracks. Any results not meeting the ASME III section ND requirement are remedied, and the test and inspection is repeated.

8.2.5 Shielding Tests

RT does not envision any shielding maintenance tests on the RT-100 as the shielding integrity cannot be damaged during normal conditions.

8.2.6 Thermal Tests

RT does not envision any periodic thermal tests being required of the RT-100.

8.2.7 Miscellaneous Test

RT does not envision any miscellaneous tests being required of the RT-100.

8.3 References

1. US Nuclear Commission Regulatory Guide 7.9

2. U.S. Nuclear Regulatory Commission, 10 CFR Part 71--PACKAGING AND TRANSPORTATION OF RADIOACTIVE MATERIAL, dated March 7, 2012 and the following specific Sections:

71.31(c)	71.37(b)	71.85(c)	71.85(a)	71.85(b)
71.93(b)	71.87(b)	71.87(g)	Subpart G	

3. American National Standards Institute, ANSI N14.5-1997, "American National Standard for Radioactive Materials–Leakage Tests on Packages for Shipment," New York.

4. U.S. Nuclear Regulatory Commission, "Fabrication Criteria for Shipping Containers," NUREG/CR- 3854, March 1985.

5. U.S. Nuclear Regulatory Commission, "Welding Criteria for Use in the Fabrication of Radioactive Material Shipping Containers, NUREG/CR-3019, March 1984.

6. NUREG 0612, Control of Heavy Loads at Nuclear Power Plants, National Technical Service, Springfield, VA 22161

7. ANSI N14.6, Special Lifting Devices for Shipping Containers Weighing 10,000 Pounds (45000 Kg) or More for Nuclear Materials, American National Standards Institute, 1430 Broadway, New York, NY 10018

8. ASTM A-29/A29M-12, Standard Specification for Steel Bars, Carbon and Alloy, Hot Wrought, General Requirements, ASTM International, West Conshohocken, PA, 2003, DOI 10.1520/A0029_A0029M-12, www.astm.org

9. ASME Code, Section III, Division I, Subsection ND, Article ND-5000

10. ASTM E-499 Standard Practice for Leaks Using the Mass Spectrometer Leak Detector in the Detector Probe Mode

11. ASME Code Section III, Subsection NF