Chapter	Section	Table / Figure	Current Living DCD page	Summary of change
Tier 1		Table 2.4.4-1	2.4-37	Recirculation system configuration change (deletion of transfer piping and refueling cavity drain piping). Addition of SSCs (e.g., valves, overflow piping, debris interceptor) per Tier 2 Table 3.2-2 change
Tier 1		Table 2.4.4-2	2.4-41	Addition of mechanical equipment (i.e., valves and debris interceptor) per Tier 2 Table 3.2-2 and 3.9-14 changes
Tier 1		Table 2.4.4-3	2.4-42	Recirculation system configuration change (deletion of transfer piping and refueling cavity drain piping). Addition of piping (i.e., overflow pipe) per Tier 2 Table 3.2-2 change
Tier 1		Table 2.4.4-5, AC#7.b.iii.b	2.4-50	RWSP water inventory change
Tier 1		Table 2.4.4-5, AC#7.b.iv	2.4-50	Strainer surface area change
Tier 1		Table 2.4.4-5, AC#7.b.iiv	2.4-51	ITAAC to verify debris interceptor design (e.g., mesh size)
Tier 1		Figure 2.4.4-1 (Sheet 4)	2.4-59	Update P&ID to be consistent with revised recirculation system configuration.
Tier 1		Table 2.11.1-2, ITAAC #4	2.11-3	Wording change to refer to floor openings between SG compartments and reactor cavity
3		Table 3.2-2	3.2-29 (sheet 13 of 56), 3.2-48 (sheet 32 of 56), 3.2-49 (sheet 33 of 56)	RWSP Overflow pipe and debris interceptor equipment classification
3	3.4		3.4-9	Water elevations and description of recirculating water flowpath
3	3.4		3.4-10	Recirculation system configuration change, RWSP water volume
3	3.4		3.4-11	Total RWSP water volume and PCCV elevation
3		Table 3.8.1-3	3.8-100	RWSP water level
3		Figure 3.8.3-6	3.8-193 (sheet 2 of 7)	Layout (Interior Compartments Wall Layout and Configuration plan view)
3		Figure 3.8.3-9	3.8-208 (sheet 2 of 3)	Layout (Containment Internal Structure Pressure Loads)
3		Figure 3.8.3-12	3.8-212	Incorporate new configulation of floor openings.
3		Figure 3.8.3-13, 17	3.8-213, 3.8-217	Layout (Structural Categories)
3		Figure 3.8.3-18	3.8-218	Floor elevation in header compartment change EL 16'-0" -> EL 15'-10"
3		Table 3.9-14	3.9-230	Add 2 rows for RWSP overflow pipe check valve
3		Figure 3J-2 (sheet 1 of 10, 2 of 10, 9 of 10, 10 of 10)	3J-16, 3J-17, 3J-24, 3J-25	Layout (Containment Internal Structure)
6	6.1.1.2.3		6.1-4	RWSP water volume
6	6.2.1.1.2		6.2-4	Delete "and not drained to the RWSP", because the reactor cavity drains to RWSP.
6	6.2.1.1.2		6.2-4	Recirculation system configuration change
6	6.2.1.1.2		6.2-5	Total number, layout, and arrangement of the floor openings, debris incteceptors, and overflow pipes
6	6.2.1.2.2		6.2-20	Description of floor openings
6	6.2.2.2.3		6.2-45	RWSP 100% water level elevation value
6	6.2.2.2.5		6.2-45, 46	Total number, layout, and arrangement of the floor openings, debris incteceptors, and overflow pipes
6	6.2.2.2.6		6.2-48	Revised minimum surface area and fabrication tolerances

Chapter	Section	Table / Figure	Current Living DCD page	Summary of change
6	6.2.2.3.7		6.2-57	Deleted unnecessary portion of CAP discussion to be consistent with MUAP-08001 discussion.
6	6.2.2.3.7		6.2-57	Wording change: "overpressure" -> "pressure"
6	6.2.2.3.7		6.2-58	Wording change: Added "ECCS and CSS pump performance at"
6	6.2.2.3.8		6.2-58	Deleted discussion of NRC vortex prevention guidance
6	6.2.2.3.8		6.2-58	Corrected wording to state no vortexing observed in sump strainer head loss testing to be consistent with MUAP-08001.
6	6.2.2.3.8		6.2-58	Added "(Ref 6.2-34)" at the end of last paragraph in Section 6.2.2.3.8.
6	6.2.2.3.11		6.2-59	RWSP transfer pipes and reactor cavity drain pipes
6	6.2.2.3.14		6.2-61	Corrected description of the sump strainer to state it is not a pressure retaining component.
6	6.2.2.3.14		6.2-61	Add description of load combinations used for sump structural analysis as same as debris interceptor.
6	6.2.2.3.14		6.2-61	Wording change: the -> a
6	6.2.9		6.2-83	Updated technical report revision and date of upstream, downstream and chemical effects.
6		Table 6.2.1-3	6.2-87	RWSP and holdup volumes
6		Table 6.2.1-4	6.2-88	RWSP volume
6		Table 6.2.1-5	6.2-89	RWSP volume
6		Table 6.2.2-2 (Sht 1)	6.2-185	RWSP volume
6		Table 6.2.2-2 (Sht 2)	6.2-186	Design description of strainer
6		Table 6.2.2-2 (Sht 3)	6.2-187	Recirculation flow paths and description of debris interceptor
6		Table 6.2.2-2 (Sht 4)	6.2-188	Sump strainer and debris interceptor class / design description of strainer
6		Table 6.2.2-2 (Sht 4)	6.2-188	Added "Equipment Class 2" in the description of the strainer.
6		Table 6.2.2-2 (Sht 4)	6.2-188	Wording change: "applied" -> "utilized"
6		Table 6.2.2-2 (Sht 4)	6.2-188	Replaced description about "quality group B" for strainer with "Equipment Class 2"
6		Table 6.2.2-2 (Sht 5)	6.2-189	Replace "maintain NPSH in safe" with "maintain adequate NPSH".
6		Table 6.2.2-2 (Sht 5)	6.2-189	Corrected following typographical errors: - in vessel -> in-vessel - in -> is - clossing -> clogging - flushing -> flashing
6		Table 6.2.2-2 (Sht 5)	6.2-189	Strainer description and design evaluations
6		Table 6.2.2-2 (Sht 10)	6.2-194	Containment pressure for NPSH calculation
6		Table 6.2.2-2 (Sht 10)	6.2-194	Delete "above".
6		Table 6.2.2-2 (Sht 10)	6.2-194	Deleted "not applicable to US-APWR" and added description for both No. 1.3.1.2 and 1.3.1.3.
6		Table 6.2.2-2 (Sht 10)	6.2-194	Deleted "not applicable to US-APWR" and added description.
6		Table 6.2.2-2 (Sht 17)	6.2-201	Deleted first sentence which did not address the Regulatory Position.

Chapter	Section	Table / Figure	Current Living DCD page	Summary of change
6		Table 6.2.2-2 (Sht 20)	6.2-204	Typographical error: disks -> disk
6		Table 6.2.2-4	6.2-210	Missed revision in May 2012 GSI-191 Tracking Report. Revised chemical debris amount as follows: Aluminum Hydroxide: 145 -> 300 lbm Sodium Aluminum Silicate: 160 -> 330 lbm
6		Figure 6.2.1-8	6.2-235	Corrected area name from "Containment recirculation air distribution chamber" to "Header compartment"
6		Figure 6.2.1-9	6.2-236	Flow path to the RWSP and transfer pipes/ Caption for figure
6		Figure 6.2.1-10	6.2-237	Hold-up water volume
6		Figure 6.2.1-11	6.2-238	RWSP Water Levels (EL of 100% water level)
6		Figure 6.2.1-12	6.2-239	RWSP Transfer Piping
6		Figure 6.2.1-13	6.2-240	Remove NaTB piping to Refueling Cavity Drain Line
6		Figure 6.2.1-14	6.2-241	Debris interceptor
6		Figure 6.2.1-15	6.2-242	RWSP overflow piping - Add check valve
6		Figure 6.2.1-16	6.2-243	Layout - Remove Transfer Pipes, add new openings and overflow pipes
6		Figure 6.2.1-17	6.2-244	Corrected area name from "Containment recirculation air distribution chamber" to "Header compartment"
6		Figure 6.2.1-70	6.2-297	Reactor Cavity Sectional View
6		Figure 6.2.1-71	6.2-298	Reactor Cavity Plan View
6		Figure 6.2.1-73	6.2-300	Steam Generator Subcompartment Plan View
6		Figure 6.2.1-74	6.2-301	Pressurizer Subcompartment Sectional View
6		Figure 6.2.2-7	6.2-322	RWSP and holdup volumes
6		Figure 6.2.2-8	6.2-323	Corrected area name from "Containment recirculation air distribution chamber" to "Header compartment"
6		Figure 6.2.2-8	6.2-323	Wording change: Typcal 1 of 4 -> Typical - 1 of 4
6		Figure 6.2.2-9	6.2-324	Corrected area's name from "Containment recirculation air distribution chamber" to "Header compartment"
6		Figure 6.2.2-9	6.2-324	Wording change: Typcal 1 of 4 -> Typical - 1 of 4
6	6.3.2.1.1		6.3-4	RWSP water elevation
6	6.3.2.2.3		6.3-7	RWSP volume and maximum temperature
6	6.3.2.2.4		6.3-8	Overflow piping (connecting pipe) description
6	6.3.2.2.5		6.3-9	Configulation change of two refueling cavity drain pipes to RWSP and NaTB transfer pipes
6		Table 6.3-5 (Sht 3)	6.3-48	RWSP volume / design temperature and peak temperature following LOCA
6		Figure 6.3-12	6.3-75	NaTB Solution Transfer Piping Diagram
6	6.5.2.2		6.5-8	RWSP water volume
14		Table 14.3-1a (Sht 2)	14.3-32	Overflow pipe description
14		Table 14.3-1a (Sht 3)	14.3-33	RWSP water volume
15	15.6.5.2.1		15.6-61	Deleteted tansfer pipe description
15		Table 15.6.5-3	15.6-91	RWSP volume

Chapter	Section	Table / Figure	Current Living DCD page	Summary of change
16	TS 3.5.4		3.5.4-2	RWSP volume
16	B 3.5.4		B 3.5.4-2	RWSP volume
19	19.1.6.1		19.1-145, 146	Description of debris interceptors
19		Table 19.1-119 (Sht 6)	19.1-913	Overflow pipe description
19		Table 19.1-119 (Sht 31)	19.1-938	Description of debris interceptors

Tire 1

Table 2.4.4-1 Emergency Core Cooling System Location of Equipment and Piping

System and Components	Location	
ECC/CS Suction Strainers	Containment	
Safety injection pumps	Reactor Building	
Accumulators	Containment	
Refueling Water Storage Pit	Containment	
NaTB Baskets	Containment	
NaTB Basket Containers	Containment	
Safety injection piping and valves between the direct vessel injection penetration and including the check valve SIS-VLV-012 A, B, C, D upstream of the direct vessel injection penetration	Containment	
Safety injection piping and valves upstream of and excluding the check valve SIS-VLV-012A,B,C,D upstream of the direct vessel injection penetration	Containment and Reactor Building	
Hot leg injection piping downstream of and including the motor operated valves SIS-MOV-014 A ,B, C, D	Containment	
Hot leg injection piping upstream of but excluding the motor operated valves SIS-MOV-014 A, B, C, D	Containment	
Accumulator piping and valves on the RCS side of and including the check valves SIS-VLV-102 A, B, C, D	Containment	
Accumulator piping and valves on the accumulator side of but excluding the check valves SIS-VLV-102 A, B, C, D	Containment	
Emergency letdown isolation valves SIS-MOV-031A, 031D, 032A, 032D and piping between valves	Containment	
Accumulator nitrogen vent piping up and including valves SIS-VLV-114, SIS-MOV-121A,B	Containment and Reactor Building	
NaTB solution transfer piping	Containment	
~~RWSP transfer piping~~	~~Containment~~	MIC-03-T1-0 0006
Refueling cavity drain piping	Containment	
Debris interceptors	Containment	MIC-03-T1-0 0006
Reactor cavity overflow piping to the RWSP	Containment	
Header compartment overflow piping to the RWSP	Containment	
RWSP overflow piping to C/V drain pump room	Containment	

Table 2.4.4-2 Emergency Core Cooling System Equipment Characteristics (Sheet 4 of 4)

Equipment Name	Tag No.	ASME Code Section III Class	Seismic Category I	Remotely Operated Valve	Class 1E/ Qual. For Harsh Envir.	PSMS Control	Active Safety Function	Loss of Motive Power Position
Safety Injection Pump Discharge Check Valves	SIS-VLV-004 A,B,C,D	2	Yes	No	—	—	Transfer Open	—
Safety Injection Pump Minimum Flow	SIS-FT-072, 073, 074, 075	—	Yes	—	Yes/No	—	—	—
Accumulator Water Level	SIS-LT-010, 020, 030,040	—	Yes	—	Yes/Yes	—	—	—
Accumulator Pressure	SIS-PT-010, 020, 030, 040	—	Yes	—	Yes/Yes	—	—	—
Safety Injection Pump Suction Pressure	SIS-PT-060, 061, 062, 063	—	Yes	—	Yes/No	—	—	—
Safety Injection Pump Discharge Pressure	SIS-PT-064, 065, 066, 067	—	Yes	—	Yes/No	—	—	—
Refueling Water Storage Pit Water Level	RWS-LT-010, 011, 012, 013	—	Yes	—	Yes/Yes	—	—	—
Safety Injection Pump Discharge Flow	SIS-FT-062, 063, 064, 065	—	Yes	—	Yes/No	—	—	—
Debris Interceptors	SIS-SST-001-A, B, C, D, E, F, G	—	Yes	—	—	—	—	—
RWSP Overflow Pipe Check Valves	RWS-VLV-078, 079	2	Yes	—	—	—	—	—

MIC-03-T1-0 0006

NOTE:
Dash (-) indicates not applicable

Table 2.4.4-3 Emergency Core Cooling System Piping Characteristics

Pipe Line Name	ASME Code Section III Class	Leak Before Break	Seismic Category I	
SI piping and valves between the DVI penetration and including the check valve SIS-VLV-012 A, B, C, D upstream of the DVI penetration	1	No	Yes	
SI piping and valves upstream of and excluding the check valve SIS-VLV-012 A, B, C, D upstream of the DVI penetration	2	No	Yes	
Hot leg injection piping downstream of and including the 4 motor operated valves SIS-MOV-014 A, B, C, D	1	No	Yes	
Hot leg injection piping upstream of but excluding the 4 motor operated valves SIS-MOV-014 A, B, C, D	2	No	Yes	
Accumulator piping and valves on the RCS side of and including the check valves SIS-VLV-102 A, B, C, D	1	Yes	Yes	
Accumulator piping and valves on the accumulator side of but excluding the check valves SIS-VLV-102 A, B, C, D	2	No	Yes	
Emergency letdown isolation valves SIS-MOV-031A, 031D, 032A, 032D and piping between valves	1	No	Yes	
Accumulator nitrogen vent piping up and including valves SIS-AOV-114, SIS-MOV-121A,B	2	No	Yes	
NaTB solution transfer piping	2	No	Yes	
~~RWSP transfer piping~~	~~2~~	~~No~~	~~Yes~~	MIC-03-T1-0 0006
Refueling cavity drain piping	2	No	Yes	
Reactor cavity overflow piping to the RWSP	2	No	Yes	MIC-03-T1-0 0006
Header compartment overflow piping to the RWSP	2	No	Yes	
RWSP overflow piping to C/V drain pump room	2	No	Yes	

Table 2.4.4-5 Emergency Core Cooling System Inspections, Tests, Analyses, and Acceptance Criteria (Sheet 6 of 10)

Design Commitment	Inspections, Tests, Analyses	Acceptance Criteria	
	7.b.ii The as-built safety injection pump injection test will be performed. Analysis will be performed to convert the test results from the test conditions to the design condition.	7.b.ii A report exists and concludes that each as-built safety injection pump has a pump differential head of no less than 3937 ft and no more 4527 ft at the minimum flow, and injects no less than 1259 gpm and no more than 1462 gpm of RWSP water into the reactor vessel at atmospheric pressure.	
	7.b.iii.a Inspections of each as-built accumulator will be conducted.	7.b.iii.a The volume of each as-built accumulator is at least 3,180 ft^3	
	7.b.iii.b Inspections of the RWSP will be conducted	7.b.iii.b The volume of the as-built RWSP is at least ~~81,230~~84,750 ft^3	MIC-03-T1-00006
	7.b.iv Inspection and analysis of the as-built ECC/CS suction strainers will be conducted.	7.b.iv A report exists and concludes that each of the four as-built ECC/CS suction strainers have the following features: stainless steel materials of construction for corrosion resistance; a minimum strainer surface area ~~of 3510 square feet~~of 2,754 ft^2; perforated plate with maximum hole diameter of 0.066 inches; remains submerged under design basis accident conditions; achieves head loss consistent with design basis NPSH evaluations	MIC-03-T1-00003 MIC-03-T1-00006
	7.b.v Inspections and analyses of the as-built coatings used in the containment will be conducted.	7.b.v A report exists and concludes that the as-built coatings used in the containment are consistent with the ECC/CS suction strainer debris generation, debris transport and downstream effects evaluations.	

Table 2.4.4-5 Emergency Core Cooling System Inspections, Tests, Analyses, and Acceptance Criteria (Sheet 7 of 10)

Design Commitment	Inspections, Tests, Analyses	Acceptance Criteria	
	7.b.vi Inspections and analyses of the as-built insulation used in the containment will be conducted.	7.b.vi A report exists and concludes that the as-built insulation in containment is consistent with design basis evaluations of suction strainer performance and downstream effects.	MIC-03-T1-0 0006 MIC-03-T1-0 0006
	7.b.vii Inspections of the as-built debris interceptors identified in Table 2.4.4-2 will be conducted.	7.b.vii Mesh size of each as-built debris interceptor identified in Table 2.4.4-2 is less than or equal to 8 in. x 8 in.	MIC-03-T1-0 0006
7.c The ECCS provides pH adjustment of water flooding the containment following design basis accidents.	7.c Inspections and analyses of the as-built NaTB baskets will be conducted.	7.c A report exists and concludes that the as-built NaTB baskets contain a total calculated weight of NaTB of ≥44,100 pounds. The tops of the as-built NaTB baskets are located below plant elevation 131 ft, 6 in.	
7.d The safety injection pumps have sufficient net positive suction head (NPSH).	7.d Tests to measure the as-built safety injection pump suction pressure will be performed. Inspections and analysis to determine NPSH available to each safety injection pump will be performed. The analysis will consider vendor test results of required NPSH and the effects of: - pressure losses for pump inlet piping and components, - pressure losses for pump suction strainers due to debris blockage, - suction from the RWSP water level at the minimum value.	7.d A report exists and concludes that the as-built NPSH available to each safety injection pump is greater than the NPSH required.	
8. Controls are provided in the MCR to open and close the remotely operated valves identified in Table 2.4.4-2.	8. Tests will be performed on the as-built remotely operated valves identified in Table 2.4.4-2 using controls in the as-built MCR.	8. Controls in the as-built MCR open and close the as-built remotely operated valves identified in Table 2.4.4-2.	

DCD_06.02.02-38
MIC-03-T1-00006

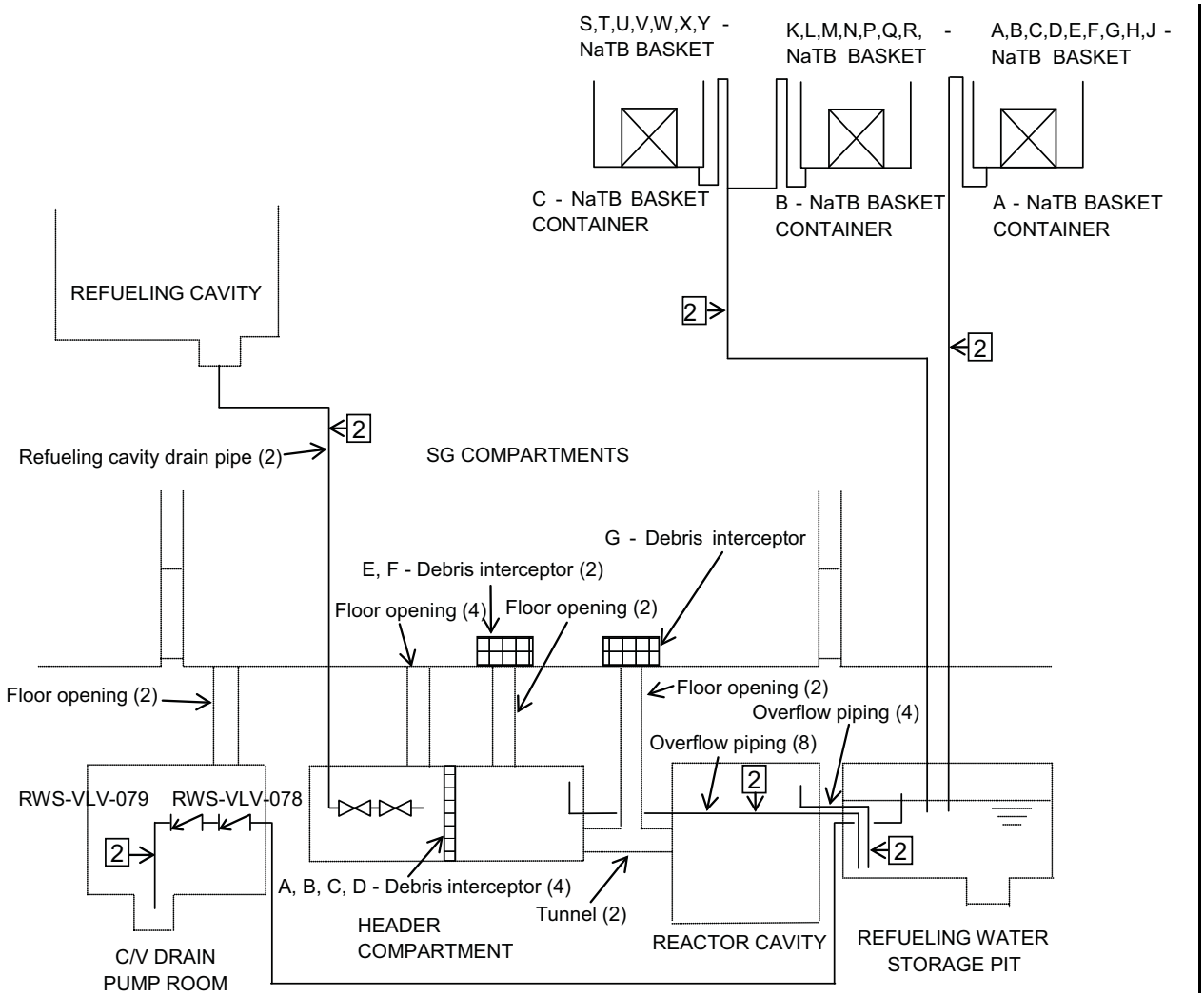

Figure 2.4.4-1 Emergency Core Cooling System (Sheet 4 of 4)

Table 2.11.1-2 Containment Vessel Inspections, Tests, Analyses, and Acceptance Criteria (Sheet 1 of 2)

Design Commitment	Inspections, Tests, Analyses	Acceptance Criteria
1.a Deleted.	1.a Deleted.	1.a Deleted.
1.b The PCCV liner is fabricated, installed, and inspected in accordance with ASME Code, Section III requirements.	1.b Inspection of the as-built PCCV liner will be performed.	1.b The ASME Code, Section III data report(s) (certified, when required by ASME Code) and inspection reports (including N-5 Data Reports where applicable) exist and conclude that the as-built PCCV liner was fabricated, installed, and inspected in accordance with ASME Code, Section III requirements.
1.c The PCCV liner welds meet ASME Code, Section III requirements for non-destructive examination of welds.	1.c Inspections of the as-built PCCV liner welds will be performed in accordance with ASME Code, Section III.	1.c The ASME Code, Section III code reports exist and conclude that the ASME Code, Section III requirements are met for non-destructive examination of the as-built PCCV liner welds.
2. Deleted.	2. Deleted.	2. Deleted.
3. The functional arrangement of the PCCV is as described in the Design Description of Subsection 2.11.1.1 and as shown in Figure 2.11.1-1.	3. Inspections of the as built PCCV will be performed.	3. The as-built PCCV conforms to the functional arrangement as described in the Design Description of Subsection 2.11.1.1 and as shown in Figure 2.11.1-1 with the following dimensional tolerances: D1, R1: +6.0/-6.0 inches H1, H2, H3: +3.0/-3.0 inches H4: +6.0/-6.0 inches t1, t2, t3: +3.0/-3.0 inches
4. A set of drain ~~lines~~paths from the SG compartments to the reactor cavity exists.	4. Inspections of the as-built drain ~~lines~~paths from the as-built SG compartments to the as-built reactor cavity as shown in Figure 2.4.4-1 will be performed.	4. ~~Drain lines from the as-built SG compartments to the as-built reactor cavity exist.~~ Eight floor openings to provide drain paths from the as-built SG compartments to the reactor cavity through the header compartment as shown in Figure 2.4.4-1 exist.

MIC-03-T1-0 0006

Tire 2
Chapter 3

Table 3.2-2 Classification of Mechanical and Fluid Systems, Components, and Equipment (Sheet 13 of 56)

System and Components	Equipment Class	Location	Quality Group	10 CFR 50 Appendix B (Reference 3.2-8)	Codes and Standards(3)	Seismic Category(4)	Notes
Safety injection piping and valves between the System penetration and including the second check valve SIS-VLV-012A, B, C, D upstream of the direct Vessel Injection penetration	1	PCCV	A	YES	1	I	
Safety injection piping and valves upstream of and excluding the second check valve SIS-VLV-012A, B, C, D upstream of the direct Vessel Injection penetration	2	PCCV, R/B	B	YES	2	I	
Hot leg injection piping downstream of and including the motor operated valves SIS-MOV-014A, B, C, D	1	PCCV	A	YES	1	I	
Hot leg injection piping upstream of but excluding the motor operated valves SIS-MOV-014A, B, C, D	2	PCCV	B	YES	2	I	
Accumulator	2	PCCV	B	YES	2	I	
Accumulator piping and valves on the reactor coolant system side of and including the second check valves SIS-VLV-102A, B, C, D	1	PCCV	A	YES	1	I	
Accumulator piping and valves on the accumulator side of but excluding the second check valves SIS-VLV-102A, B, C, D	2	PCCV	B	YES	2	I	
Emergency core cooling / containment spray strainer	2	PCCV	~~B~~N/A	YES	5	I	MIC-03-03-00043
Emergency letdown isolation valves SIS-MOV-031A, 031D, 032A, 032D and piping between valves	1	PCCV	A	YES	1	I	
Emergency let down piping from and excluding valves SIS-MOV-032A,D	2	PCCV	B	YES	2	I	

Table 3.2-2 Classification of Mechanical and Fluid Systems, Components, and Equipment (Sheet 32 of 56)

System and Components	Equipment Class	Location	Quality Group	10 CFR 50 Appendix B (Reference 3.2-8)	Codes and Standards[3]	Seismic Category[4]	Notes	
Refueling water recirculation pumps	3	R/B	C	YES	3	I		
Refueling water storage pit	2	PCCV	B	YES	5	I		
Refueling water storage auxiliary tank	4	O/B	D	N/A	4	NS		
Refueling water recirculation pumps discharge piping and valves in the refueling water storage system excluding piping downstream of the valve RWS-VLV-021	3	PCCV	C	YES	3	I		
Piping including branch piping and valves in the refueling water storage system from the refueling water storage pit up to and including the outermost containment isolation valves RWS-MOV-004,AOV-022, and valves RWS-VLV-041,042,045,061,062,075	2	PCCV R/B	B	YES	2	I		
Refueling water recirculation pump suction piping from RWS-MOV-004(excluding) and from RWS-VLV-101(including) up to pumps	3	R/B	C	YES	3	I		
~~RWSP transfer piping~~	~~2~~	~~PCCV~~	~~B~~	~~YES~~	~~2~~	~~I~~		MIC-03-03-00043
Reactor cavity overflow piping to the RWSP	2	PCCV	B	YES	2	I		
Header Compartment overflow piping to the RWSP	2	PCCV	B	YES	2	I		
Refueling cavity drain piping	2	PCCV	B	YES	2	I		
Debris interceptor	~~5~~2	PCCV	N/A	N/A	5	I~~I~~		MIC-03-03-00043
Piping from the refueling water storage auxiliary tank up to and excluding the valve CVS-VLV-591	4	O/R R/B	D	N/A	4	NS		

Table 3.2-2 Classification of Mechanical and Fluid Systems, Components, and Equipment (Sheet 33 of 56)

System and Components	Equipment Class	Location	Quality Group	10 CFR 50 Appendix B (Reference 3.2-8)	Codes and Standards[3]	Seismic Category[4]	Notes
RWSP overflow piping to C/V drain pump room	2	PCCV	B	YES	2	I	MIC-03-03-00043
Piping and valves in the refueling water storage system except the foregoing piping and valves	8	PCCV R/B	D	N/A	4	NS	
18. Compressed Air and Gas System							
Instrument air compressors package	9	T/B	N/A	N/A	5	NS	
Service air compressors package	9	T/B	N/A	N/A	5	NS	
Compressed air and gas system piping and valves except the containment penetration noted below	9	PCCV R/B A/B T/B	N/A	N/A	5	NS	
Compressed air and gas system containment isolation valves and piping between the valves	2	PCCV R/B	B	YES	2	I	
19. Primary Make-Up Water System							
Primary makeup water tank	8	O/B	D	N/A	4	NS	
Primary makeup water pump	8	A/B	D	N/A	4	NS	
Primary makeup water system valves and piping from and including PWS-VLV-005	8	R/B A/B O/B	D	N/A	4	NS	
Primary makeup water system from deaerated supply line up to but excluding PWS-VLV-005, and upstream and downstream of PWS-VLV-060	9	R/B A/B	N/A	N/A	5	NS	
20. Demineralized Water System							
Demineralized water system containment isolation valves and piping between the valves	2	PCCV R/B	B	YES	2	I	

2. Elevation 50 ft, 2 in. (third floor), which corresponds with the middle doorway into each of the SG compartments (the floor corresponding to this elevation is concrete)

3. Elevation 76 ft, 5 in. (fourth floor/operating floor), which corresponds with the upper doorway into each of the SG compartments (the floor corresponding to this elevation is concrete)

The PCCV is further partitioned by the four SG compartments, the pressurizer compartment, the regenerative heat exchanger room, the letdown heat exchanger room, the excess letdown heat exchanger room, the refueling cavity, the HVAC header compartment, the ~~PCCV~~C/V drain pump room, and the reactor cavity. MIC-03-03-00043

In order to assure the long-term cooling performance after an accident event, spray water from the CSS or spill water from a damaged component is collected in the RWSP at the bottom of the PCCV. The partitions above the RWSP are designed to permit containment spray water and spill water to flow freely through the PCCV to the RWSP.

This is accomplished through floor drains in the regenerative heat exchanger room, the letdown heat exchanger room, and the excess letdown heat exchanger room. Water flowing into each room is drained by way of the floor drain to the PCCV sump in the ~~PCCV~~C/V drain pump room (elevation 3 ft, 7 in.). If the PCCV sump is full or if the floor drain is clogged, water will flow from each area/compartment through the flow paths described as follows: MIC-03-03-00043

- Water on the elevation 76 ft, 5 in. concrete floor flows to the ~~PCCV~~C/V drain pump room through the floor drain, or alternatively, flows to the elevation 25 ft, 3 in. floor through the stairwells and equipment hatch opening. MIC-03-03-00043

- Water on the elevation 50 ft, 2 in. concrete floor flows to the ~~PCCV~~C/V drain pump room through the floor drain, or alternatively, flows to the elevation 25 ft, 3 in. floor through the stairwells and equipment hatch opening. MIC-03-03-00043

- ~~Water in the SG compartments flows across the floor of the HVAC header compartment to the drain line into the reactor cavity. The water then fills the reactor cavity. After the water level in the reactor cavity equalizes with the water in the SG compartment, the water level rises until it exceeds elevation 25 ft, 3 in. When the flood water in the SG compartment exceeds elevation 25 ft, 3 in., it then flows out through the doorway in the secondary shield wall to the elevation 25 ft, 3 in. floor.~~Water flowing onto the elevation 25 ft, 3 in. floor flows through floor openings in the SG compartment rooms into the header compartment, reactor cavity, the C/V drain pump room. First, water completely fills the C/V drain pump room up to elevation 25 ft, 3 in. Then, the water level in the header compartment and reactor cavity reaches the overflow piping at elevation 20-ft, 10-in. which connects these rooms to the RWSP. The header compartment and reactor cavity are connected through tunnels which equalizes the water level in these rooms. When the flood water in the header compartment and reactor cavity exceeds the top of the overflow piping at elevation 20-ft, 10-in., water flows into the RWSP. MIC-03-03-00043

- Water at the pressurizer compartment flows to the SG compartment by way of the inlet/outlet to the SG compartment.
- Water in the regenerative heat exchanger room, the letdown heat exchanger room, and the excess letdown heat exchanger room flow out their respective entrance doorways. The flow path from there is to the respective level floor drains or through the alternate paths.
- ~~Water flowing onto the elevation 25-ft, 3-in. floor flows to the RWSP through the 18-in. transfer piping provided at 10 places on the floor surface and into the flow to the PCCV drain pump room through the stair opening on the floor surface. Water also flows into the HVAC header compartment from the PCCV drain pump room by way of a walkway through the lower primary shield wall.~~ MIC-03-03-00043

Thus, flood waters in the containment reaches the RWSP, the HVAC header compartment, the ~~PCCV~~C/V drain pump room, and the reactor cavity. MIC-03-03-00043

Inside the containment, the largest water retaining components are the refueling cavity, and the RWSP. The RWSP and the refueling cavity are robust reinforced concrete seismic category I structures with thick walls which have been designed for all applicable loads, including the potential in-containment missile loads and hydrodynamic loads. Due to their robust design, a postulated failure of these structures is not credible. Additionally, the combined fuel transfer canal/reactor cavity pit during all but refueling operations is dry. Since a LOCA represents the worst case flooding event, sloshing is not a factor in PCCV flooding.

There are piping systems inside the PCCV such as the CCW system and fire protection water supply system (fire water) that are connected to large-volume water sources, however a significant accidental release of water into the PCCV from these sources are not plausible for the following reasons:

- All CCW piping inside the PCCV is classified as seismic category I.
- Containment isolation valves outside the PCCV for the fire protection water supply system are normally closed. Therefore, there is no water released by a pipe break of the fire protection water supply system inside PCCV.
- The RCP purge water head tank and C/V reactor coolant drain tank are non-seismic components which contain water inside the PCCV. The total amount of water contained within these tanks is 106 ft^3, which is significantly less than the volume of water from a LOCA.

~~The maximum flooding event in the containment is therefore a result of a LOCA. During a LOCA, water held in the RCS and water from the accumulator tanks is injected into the RCS, and flows from the damaged main coolant pipe. Additionally, spray and injection of the RWSP volume is assumed.~~When water is flowing through the overflow piping and floor openings, the water level slightly exceeds the top of the overflow piping at elevation 20-ft, 3-in. and the floor level at 25-ft, 3-in. However, the components to be protected are installed at a sufficiently higher level than the height of the overflowing water. MIC-03-03-00043

The volume of water from a LOCA is conservatively assumed to be equal to the volume of the RCS volume, the four accumulator tank volumes, and the volume of the RWSP for a total volume of ~~113,000~~123,000 ft^3. MIC-03-03-00043

The total volume of storage space below ~~the diaphragm at elevation 25 ft, 3 in. is 127,000 ft^3~~the top of the overflow piping at elevation 20 ft, 10-in. is 130,000 ft^3. All flood water is collected below the bottom-layer partition. The components to be protected are installed above ~~this diaphragm; the~~the top of the overflow piping. The SSCs inside the PCCV such as emergency letdown line isolation valve, safety depressurization valve and pressurizer backup heater are not affected by flood waters. MIC-03-03-00043

Table 3K-1 is provided in order to list all the protective SSCs inside PCCV that require flood protection and to verify the locations of SSCs relative to the internal flood level. Table 3K-1 includes the information whether each SSC is above the maximum flood elevation inside PCCV (EL.~~25~~20'-~~3~~10") or not. MIC-03-03-00043

3.4.1.5.2 Reactor Building Flooding Events

The US-APWR R/B consists of a RCA separated physically by concrete walls and/or floors and a NRCA. These concrete walls are designed so that flooding may not cross between mutual areas by installing penetrations for pipe, ducts, and cable trays above the maximum flooding level and/or by sealing the penetrations. As recommended by SRP 14.3.2 (Reference 3.4-4), penetrations in divisional walls are at least 8 ft, 3 in. above the floor, and safety-related electrical, instrumentation, and control equipment are located sufficiently above the flood level.

Inside the R/B, the cask wash down pit, the new fuel storage pit, and the interconnected spent fuel pit, the transfer canal, the cask loading pit, and the fuel inspection pit, with the tops of these open pits all located at plant elevation 76 ft, 5 in., represent potential large volumes of water. These pits are robust seismic category I structural reinforced concrete with thick walls, which have been designed for applicable loads, including hydrodynamic loads. Due to their robust design, postulated failure of these structures is not credible. Flood water that could be displaced out of these pits due to hydrodynamic effects such as sloshing is enclosed within pit area by water tight compartmentalization.

The R/B is adjoined by the A/B, and as such, the A/B consists of a RCA and a NRCA which are physically separated. Doorways with water-tight doors are provided between the RCA of the R/B and the RCA of the A/B. Similarly, doorways with water-tight doors are provided between the NRCA of the R/B and the NRCA of the A/B, and between the NRCA of R/B and T/B.

The NRCA of the R/B adjoins the PS/B, with doorways providing potential flow paths through the areas.

3.4.1.5.2.1 Radiological Controlled Area

The RCA is arranged with each of the four safety trains separated into four quadrants around the outside of the PCCV. Physically, individual train equipment within the four quadrants is located to provide the separation between the same equipment of the other

Table 3.8.1-3 Temperature Gradients of the R/B and PCCV (Sheet 2 of 2)

Area (See Figure 3.8.1-9 for Identification of Location)	Normal Operation, T_o (°F)		Accident Condition T_a (°F)	
	Winter	Summer	Pipe Break in Refueling Cavity (Winter, Summer)	Pipe Break in SG Compartment (Winter, Summer)
19 PCCV Atmosphere	105	120	Figure 3.8.1-10	Figure 3.8.1-10
20 SG Compartment Atmosphere	105	120	Figure 3.8.1-10	Figure 3.8.1-12
21 Primary Shield Atmosphere(1)	105	120	Figure 3.8.1-13	Figure 3.8.1-10
22 Reactor Cavity Atmosphere (upper)(2)	150		See (4)	See (4)
23 Reactor Cavity Atmosphere (lower)(3)	105	120	See (4)	See (4)
24 PCCV Sump Pool Water (except RWSP)(5)	-		Figure 3.8.1-11	Figure 3.8.1-11
25 SG Compartment Sump Water	-		Figure 3.8.1-11	Figure 3.8.1-12
26 Refueling Cavity Sump Water	-		Figure 3.8.1-13	Figure 3.8.1-11
27 RWSP Water(6)	105	120	Figure 3.8.1-11	Figure 3.8.1-11
28 PCCV Sump Pump Area	105	120	Figure 3.8.1-11	Figure 3.8.1-11
29 Outdoor Air Temperature	-40	115	equal to temperature during normal operation	equal to temperature during normal operation
30 Basemat Side Temperature	calculated by the linear interpolation between earth temperature and outdoor air temperature			
31 Earth Temperature	35	80	equal to temperature during normal operation	equal to temperature during normal operation

NOTES:

1. Above EL. 46 ft, 11 in.
2. EL. 7 ft, 3 in.~46 ft, 11 in.
3. Below EL. 7 ft, 3 in.
4. Below EL. 25 ft, 9 in., the temperature of “26 Refueling Cavity Sump Water” is applied. EL. 25 ft, 9 in. is the maximum water level in a LOCA. From EL. 25 ft, 9 in.~46 ft, 11 in., the temperature of “Primary Shield atmosphere” is applied.
5. The following temperature conditions are applied to a HVAC header room, a PCCV coolant drain pump area, and a PCCV coolant drain tank area. Below EL. 25 ft, 9 in., the temperature of “24 PCCV sump pool water” is applied. EL. 25 ft, 9 in. is the maximum water level in a LOCA. Above EL. 25 ft, 9 in., the temperature of “19 PCCV Atmosphere” is applied.
6. ~~The water level of the RWSP is EL. 19 ft, 6 in. in a normal operation mode and EL. 7 ft, 7 in. in a recirculation mode.~~The water level of the RWSP is EL. 20 ft, 2 in. at 100% water level in normal operation mode and EL. 7 ft, 7 in. at design basis minimum water level. MIC-03-03-00043

MIC-03-03-00043

Security-Related Information – Withheld Under 10 CFR 2.390

Figure 3.8.3-6 Interior Compartments Wall Layout and Configuration (Sheet 2 of 7)

MIC-03-03-00043

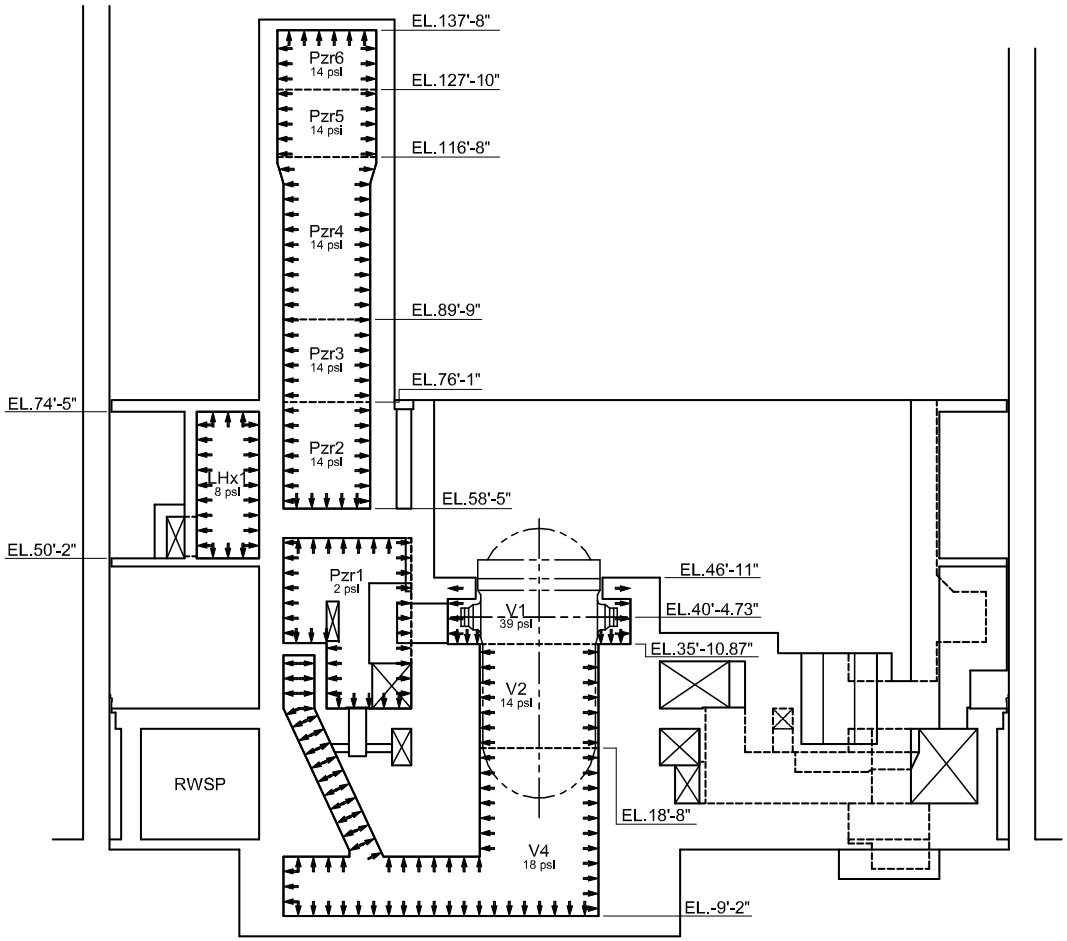

Figure 3.8.3-9 Containment Internal Structure Pressure Loads (Sheet 2 of 3)

DCD_03.07.02-35
MIC-03-03-00045

Security-Related Information – Withheld Under 10 CFR 2.390

Figure 3.8.3-12 Structural Categories Between Elevations 3'-7" and 21'-0"

DCD_03.07.02-35
MIC-03-03-00043

Security-Related Information – Withheld Under 10 CFR 2.390

Figure 3.8.3-13 Structural Categories Between Elevations 21'-0" and 35'-11"

MIC-03-03-00066

DCD_03.07.02-35
MIC-03-03-00043

Security-Related Information – Withheld Under 10 CFR 2.390

Figure 3.8.3-17 Structural Categories, Section A-A (Looking West)

DCD_03.07.02-35
MIC-03-03-00045

Security-Related Information – Withheld Under 10 CFR 2.390

Figure 3.8.3-18 Structural Categories, Section B-B (Looking North)

Table 3.9-14 Valve Inservice Test Requirements (Sheet 99 of 120)

Valve Tag Number	Description	Valve/ Actuator Type	Safety-Related Missions	Safety Functions(2)	ASME IST Category	Inservice Testing Type and Frequency	IST Notes	
RWS-VLV-012A	Refueling water recirculation pump discharge check	Check	Transfer Open	Active	BC	Check Exercise/ Refueling Outage		
RWS-VLV-012B	Refueling water recirculation pump discharge check	Check	Transfer Open	Active	BC	Check Exercise/ Refueling Outage		
RWS-VLV-078	RWSP overflow pipe check valve	Check	Maintain Close	Passive	BC	Check Exercise/ Refueling Outage	3	MIC-03-03-00043
RWS-VLV-079	RWSP overflow pipe check valve	Check	Maintain Close	Passive	BC	Check Exercise/ Refueling Outage	3	MIC-03-03-00043
DWS-VLV-004	Demineralized water supply containment isolation	Manual	Maintain Close	Passive Containment Isolation Safety Seat Leakage	A	Containment Isolation Leak Test	5	

MIC-03-03-0
0043

Security-Related Information – Withheld Under 10 CFR 2.390

Figure 3J-2 Containment Internal Structure Drawings (Sheet 1 of 10)

MIC-03-03-0
0043

Security-Related Information – Withheld Under 10 CFR 2.390

Figure 3J-2 Containment Internal Structure Drawings (Sheet 2 of 10)

MIC-03-03-0
0043

Security-Related Information – Withheld Under 10 CFR 2.390

Figure 3J-2 Containment Internal Structure Drawings (Sheet 9 of 10)

MIC-03-03-0
0043

Security-Related Information – Withheld Under 10 CFR 2.390

Figure 3J-2 Containment Internal Structure Drawings (Sheet 10 of 10)

Tire 2
Chapter 6

This chapter contains entire of Subsections 6.2 and 6.3.

Borated water is used in the RCS and the RWSP. The water quality requirements for the RCS and RWSP are described in Chapter 9, Subsection 9.3.4 and Table 6.1-3, respectively. The pH of the RWSP during a LOCA is adjusted by the NaTB baskets. The concrete that forms the structure of the RWSP is clad in stainless steel which inhibits the leach-out of chlorides and other contaminants into the RWSP water. Therefore, the compatibility of the ESF components is preserved in the post-LOCA environment.

The use of particulate based insulation such as Min-K-based pipe insulation is prohibited in containment. Non-metallic (thermal) insulation is controlled in accordance with RG 1.36 (Ref. 6.1-8) to control the leachable concentrations of chlorides, fluorides, sodium compounds, and silicates. Chapter 5, Subsection 5.2.3.2.3, provides further details on the external insulation requirements which are also applicable to ESFs. Close attention to regulatory requirements and guidance ensures material compatibility between US-APWR construction materials and ESF fluids.

6.1.1.2.2 Controls for Austenitic Stainless Steel

Chapter 5, Subsection 5.2.3, describes the controls employed during material selection to preclude the severe sensitization of stainless steel materials to be used for fabrication. For example, cold worked austenitic stainless steel (300 series) typically is solution heat treated. Controls may be based on, but are not limited to, those imposed by Appendix B to 10 CFR 50, Appendix B part, 50, "Quality Assurance Criteria for Nuclear Power Plants and Fuel Reprocessing Plants", with particular emphasis on Criteria VII, “Control of Purchased Material, Equipment, and Services;” VIII, Identification and Control of Materials, Parts, and Components; and IX, Control of Special Processes (Ref. 6.1-9). When using fresh water to flush systems containing austenitic stainless steel components following construction, a chloride stress-corrosion cracking inhibitor is used in the flushing medium. The process of cleaning of materials and components, cleanliness control, and pre-operational flushing for systems that contain austenitic stainless steel components follows RG 1.37 (Ref. 6.1-11) and the quality assurance program complies with the provisions and recommendations provided by ASME NQA-1-1994, Part II (Ref. 6.1-10). This process includes documentation to verify the compatibility between the materials used in manufacturing ESF components and the ESF fluids.

Chapter 5, Subsection 5.2.3 describes control of welding, heat treatment, welder qualification, and contamination protection for ferritic and austenitic stainless steels material fabrication which are also applicable to ESFs. The ferrite content in stainless steel weld metal will be controlled in accordance with the recommendations of RG 1.31 (Ref. 6.1-13).

6.1.1.2.3 Composition, Compatibility and Stability of Containment and Core Coolants

~~607,500 gallons~~84,750 ft^3 (634,000 gallons) of borated water are available in the RWSP to meet LOCA and long-term post-LOCA coolant needs. The RWSP water is borated to approximately 4,000 ppm boric acid, at a pH of approximately 4.3. Crystalline NaTB spray additive is stored in containment and is used to raise the pH of the RWSP water from 4.3, to at least 7.0, post-LOCA. This pH is consistent with the guidance of NRC Branch Technical Position MTEB-6.1 for the protection of austenitic stainless steel from chloride-induced stress corrosion cracking. Subsection 6.3.2.2.5 describes the design of

MIC-03-06-00070

NaTB baskets. At this pH, corrosive attack of stainless steel alloys used in containment will be insignificant. Similarly, a post-LOCA hydrogen generation (due to material corrosion) is negligible. In addition, the generation of chemical precipitates from aluminum will be minimized. Programmatic controls to limit aluminum in the containment are described in Subsection 6.2.2.3.

DCD_06.02.02-63

6.1.2 Organic Materials

With the notable exception of coatings and electrical insulation, organic materials (e.g., wood, plastics, lubricants, asphalt) are not freely available in containment. A primer (e.g., epoxy) typically is applied as a base coating over the steel plate lining of the containment vessel, as well as to structural steel support members. A scuff resistant top coat (e.g., epoxy) is then applied for durability and decontamination considerations. When practical, carbon steel access and support components inside containment (e.g., stairs, ladders, landings, gratings, handrails, ventilation ducts, cable trays) may be hot-dip galvanized. The operating surfaces of components (e.g., valve handwheels, operating handles) are typically factory coated for mechanical durability and resistance to the containment operating environment. These coatings may be dry-powder or water-reduced materials. However, factory application, to sometimes small and complex shapes, under controlled conditions, makes such coatings highly resistant to removal. With rare and minor exception (e.g., protective coatings on trim pieces, faceplates, and covers) coatings used inside containment are applied in accordance with RG 1.54 (Ref. 6.1-12), and meet the applicable environmental qualifications described in Chapter 3, Section 3.11. All organic materials that exist in significant amounts in the containment (e.g., wood, plastics, lubricants, paint or coatings, electrical cable insulation, and asphalt) are identified and quantified in Subsection 6.2.2.3. Coatings not intended for a 60-year service without overcoating should include total overcoating thicknesses expected to be accumulated over the service life of the substrate surface.

Quality assurance programs provide the confidence that safety-related coating systems inside and outside of containment will perform their intended safety functions. This is achieved by controlling procurement, application, and monitoring programs for Service Levels I, II, and III coating systems. Service Level I coating systems satisfy quality requirements provided in ASME NQA-1-1994, ASTM D3843-00, and 10 CFR 50 Appendix B, Criterion IX. Service Level III coating systems satisfy quality requirements provided in ASME NQA-1-1994 and 10 CFR 50, Appendix B, Criterion IX.

The classification of Service Levels for coating systems conforms to guidance provided in RG 1.54 Revision 1 and associated standards.

As stated in RG. 1.54 Revision 1, the scope of the maintenance rule (10 CFR 50.65) includes Safety-Related Structures, Systems, and Components. This also applies to Service Level I protective coatings of any form. Therefore, control and qualification of applied coatings are maintained through monitoring and maintenance programs for protective coating and organic materials, along with adequate implementation of the quality assurance program described above.

Coatings program assures that the effects of protective coatings within scope are monitored, or that its performance is effectively controlled through preventive maintenance. The program includes programmatic bases and guidelines, as well as the

6.2 Containment Systems

This section describes the physical attributes of the reactor containment and how these physical attributes address and satisfy the containment functional design requirements. This section also describes the following ESF systems directly associated with containment:

- Containment structure (vessel), including subcompartments
- Containment spray system
- Containment isolation system
- Containment hydrogen monitoring and control system

For each of these systems and structures, this section describes the design bases, the design features, and the evaluations of the acceptability of the design. For some systems (such as the containment structure), the design evaluation is conducted in conjunction with analyses of postulated accidents (documented in Chapter 15, “Transient and Safety Analyses”), which can release material and energy into the containment, resulting in increased pressure and temperatures inside the containment vessel. This section describes the detailed assessments of the mass and energy releases associated with these postulated accidents.

6.2.1 Containment Functional Design

The containment is designed as an essentially leak-tight barrier that will safely and reliably accommodate calculated temperature and pressure conditions resulting from the complete size spectrum of piping breaks, up to and including a double-ended, guillotine-type break of a reactor coolant or main steam line.

The containment is designed to be compatible with all environmental effects experienced during normal operations. These include, but are not limited to, containment temperature, pressure, humidity, presence of fluids (e.g., equipment lubricants and borated reactor coolant), and other assorted environmental effects of reactor operation, testing, and maintenance.

The containment is also designed to accommodate conditions during and following postulated accidents, such as the design basis loss-of-coolant accident (LOCA). These conditions include elevated temperature, pressure and humidity. Conditions also include radioactive fission products, NaTB, and borated water. The peak pressure for the most severe postulated accident does not exceed the containment internal design pressure, which is 68 psig.

As described in Chapters 3 and 5, systems and components inside containment are designed, supported, and restrained to withstand postulated normal, seismic and accident dynamic effects.

The containment function described above is maintained also in the hot shutdown conditions, Modes 3 and 4 described in Chapter 16, when the postulated accident could

cause a release of radioactive material in the containment and an increase in containment pressure and temperature. The conditions for Mode 1 or Mode 2 are assumed for the containment analyses in this section because the energy sources including reactor coolant fluid and metal energy, steam generator fluid and metal energy, core stored energy, and decay heat are much larger than that in the Mode 3 and 4 shutdown condition.

6.2.1.1 Containment Structure

6.2.1.1.1 Design Bases

As presented in Sections 3.2 and 3.8, the containment is designed and constructed to withstand a broad spectrum of seismic events. To comply with GDC 16, the containment is designed to ensure leak tightness during normal operations and, under postulated accident conditions, the containment is designed and built to safely withstand an internal pressure of 68 psig. The containment design pressure 68 psig is based on the LOCA event which bounds the SLB event, from the containment peak pressure standpoint. Adequate design margin is demonstrated by a containment test pressure of 78.2 psig. The containment design temperature is 300°F.

Table 6.2.1-1 summarizes containment temperature and pressure (and comparisons to design pressure), for the worst case of postulated breaks, and assumed system and component failures. Figure 6.2.1-1 through Figure 6.2.1-4 are plots of containment internal pressure and temperature versus time for the most severe primary and secondary system piping failures. These figures show that internal containment pressure is reduced to less than 50% of the peak value 24 hours after event initiation.

Table 6.2.1-1 and Figure 6.2.1-1 through Figure 6.2.1-4 are based on evaluations where uncertainties and tolerances with respect to the containment and its heat removal systems are biased to generate conservatively high values. The results show that the containment heat removal system is adequate to maintain containment conditions within design limits assuming a worst single failure condition in addition to one heat removal train being out of service. For primary system piping breaks, loss of offsite power (LOOP) is assumed. For secondary system piping breaks, the cases where LOOP is not assumed are also considered, since the LOOP can possibly reduce releases to the containment. The containment heat removal systems are described in detail in Section 6.2.2. Additional information about the bases for Table 6.2.1-1 and Figure 6.2.1-1 through Figure 6.2.1-4 is given in Subsection 6.2.1.1.3.

Subsections 6.2.1.3 and 6.2.1.4 describe evaluations performed to determine the sources and amounts of mass and energy that might be released into the containment. Specific time-dependent mass and energy release rate results from these evaluations are described in Subsections 6.2.1.3 and 6.2.1.4.

The single failure condition related to containment pressure and temperature calculations is the failure of one of the four emergency power sources. In addition, another emergency power source is assumed to be out of service, which leads to only two emergency power sources being available. This results in minimum containment heat removal capability and minimum safety injection flow. The effect of maximum injection flow is evaluated assuming all four-train of pumped safety injection operating, combined

with single failure plus the outage of one train of the four-train containment heat removal system as a sensitivity study.

The containment depressurization rate, as shown in Figure 6.2.1-1 and Figure 6.2.1-3, is established by two trains of the containment heat removal systems. These figures show that internal containment pressure is reduced to less than 50% of the peak value within 24 hours after event initiation, which is consistent with the assumptions used in the calculations of the offsite radiological consequences of the accident.

Evaluations are performed to calculate a time-dependent "minimum" containment pressure transient during a postulated LOCA. In this evaluation, which is described in Subsection 6.2.1.5, uncertainties and tolerances are biased to generate conservatively low pressure values. The results from this evaluation are used in ECCS performance analysis reported in the LOCA analyses section in Chapter 15. These minimum containment pressure values are used for conservatism, because a high containment pressure value leads to non-conservative fuel clad temperature calculations during the reflood stage of a large-break LOCA, when the reactor vessel internal pressure is essentially the same as the containment pressure.

Numerous operational sequences addressing low-power and shutdown operations are provided in Chapter 19, Subsection 19.1.6.1. These plant operation state (POS) consider assumed plant configuration, potential initiators and plant response, including the potential for various loss of decay heat removal capability such as loss of steam generator(s), CCW/ESWS and RHRS. Remedial operations are described including use of the CVCS and SIS. These POSs provide a bases for operational responses to the postulated events.

6.2.1.1.2 Design Features

The containment is a prestressed, post-tensioned concrete structure with a cylindrical wall, hemispherical dome, and a flat, reinforced concrete foundation slab. It is often described in this DCD as "prestressed concrete containment vessel" (PCCV), containment vessel, or simply "containment." The inner height of the containment is approximately 226.5 ft and the inside diameter of the containment cylinder measures approximately 149 ft. The containment dome is 3 ft.-8 in. or 4 ft.-4 in. thick, while the containment wall thickness is 4 ft.-4 in. The inner surface of containment includes a 0.25 in. welded steel plate liner anchored to the concrete. The containment is equipped with a polar crane, which transfers its load to the containment wall via a crane girder.

The US-APWR containment is designed to withstand a negative pressure of 3.9 psi (vacuum) relative to ambient (i.e., external pressure 3.9 psig higher than internal pressure). An evaluation concludes that this design feature provides sufficient margin in the event of containment pressure reduction caused by inadvertent initiation of the containment spray system, and discussed in Subsection 6.2.1.1.3.

The containment has a 60-year design life.

The containment is constructed with three large openings: two personnel airlocks and one equipment hatch.

All other containment penetrations go to the containment annulus. The containment has electrical and mechanical penetrations. Piping which penetrates containment is provided with isolation valves (some penetrations require inside and outside isolation valves). The annulus emergency exhaust system (Subsection 6.5.2) automatically establishes a slightly negative pressure in the annulus following a safety injection (SI) signal, and filters the exhaust air before discharge.

The refueling water storage pit (RWSP) is located at the bottom of the containment, at elevation 3 ft.-7 in. The RWSP is roughly configured as a horseshoe-shaped box around the containment perimeter. A partial sectional view showing the concrete structure and cladding is shown in Figure 6.2.1-8. The open end of the RWSP is oriented at containment 0° azimuth (plant north), where the reactor coolant drain tank, reactor coolant drain pumps and the containment sump are located.

Table 6.2.1-2 lists basic specifications for the PCCV. Figure 6.2.1-5 presents a sectional view of the containment. Figure 6.2.1-5 through Figure 6.2.1-7 show details of the personnel air locks and the equipment hatch, as well as major pipe penetrations (steam and feedwater lines). Section 1.2 describes additional general arrangement drawings that include the containment structure and major components inside it.

The RWSP is the source of borated-water for emergency core cooing and containment spray systems.

The US-APWR containment is basically a PWR dry design. However, it differs from many other PWR containments, in that the source of emergency core cooling water for the safety injection system (SIS) and containment spray system (CSS) is located inside the containment. Thus, there is no need for any “switch-over” of ECCS suction from an external source to the containment recirculation sump. Bases and analysis related to ECCS performance are discussed in Subsection 6.2.1.5.

Containment ladders, walkways and gratings are designed as “free-flow, pass through" and non-pressure retaining, as discussed in Section 3.8. Containment cavities and pits where water may be trapped ~~and not drain to the RWSP~~ during SIS and CSS operation, are shown in Figure 6.2.1-9. The potential for water to collect in the locations is accounted for in the containment design evaluations and is quantified in Figure 6.2.1-10. Water levels of the RWSP are shown in Figure 6.2.1-11. MIC-03-06-00071

Figure 6.2.1-9 through Figure 6.2.1-15 also shows containment drainage paths into the RWSP. ~~Piping is provided through several partitions above the RWSP where water could otherwise be trapped. In particular, piping that allows free communication and drainage is installed between the refueling cavity and the pressure equalizing chamber, as shown in Figure 6.2.1-9. These communication pipes are closed with a flange at both ends during refueling. Drain piping also is provided between the pressure equalizing chamber and the RWSP.~~ Containment drainage flows through floor openings in the SG compartments to the reactor cavity, header compartment, and C/V drain pump room. Containment drainage also flows from the refueling cavity through piping to the header compartment, although this piping is closed with valves during refueling, as shown in Figure 6.2.1-13. Overflow pipes, as shown in Figures 6.2.1-12 and 6.2.1-16, are installed to transfer water from the reactor cavity and header compartment to the RWSP. The overflow pipes are protected from large debris by debris interceptors, as shown in Figure 6.2.1-14. The MIC-03-06-00070

reactor cavity and header compartment overflow pipes are offset from the floor openings and refueling cavity drain piping. The reactor cavity and header compartment are connected to equalize water levels between the two compartments. The RWSP overflow piping to the C/V drain pump room installed above the 100% RWSP water level is not a containment drainage path during a LOCA. Two check valves installed in series in this overflow line prevent water from returning to the RWSP from the C/V drain pump room after a LOCA, as shown in Figure 6.2.1-15. The C/V drain pump room is therefore an ineffective volume for containment drainage. Figure 6.2.1-16 and Figure 6.2.1-17 present the plan and sectional view of the RWSP, while Table 6.2.1-3 presents RWSP design and containment-related features. MIC-03-06-00070

The total number, layout and arrangement of the floor openings, debris interceptors, and overflow pipes is as follows: MIC-03-06-00070

- Two floor openings to the C/V drain pump room
- Four floor openings to the header compartment, each with a debris interceptor within the header compartment
- Two floor openings to the header compartment, each with a debris interceptor above the floor opening
- Two floor openings and tunnels which connect the header compartment and reactor cavity, with one common debris interceptor above both floor openings
- Eight header compartment overflow pipes to the RWSP
- Four reactor cavity overflow pipes to the RWSP
- One RWSP overflow pipe to the C/V drain pump room with redundant check valves to prevent post-LOCA containment drainage return flow to the RWSP

As discussed in Chapter 3, the RWSP is designed as seismic category I, Safety Class 2 system, with a RWSP design water peak temperature following LOCA of 270°F. Pressure in the RWSP air space is relieved to the containment atmosphere. The inside walls and floor of the RWSP (in contact with 4,000 ppm boric acid solution) are lined with steel plate clad with stainless steel. The RWSP ceiling (underside of floor at containment elevation 25 ft.- 3 in.) is not expected to be in contact with RWSP boric acid solution, but is clad with stainless steel plate nevertheless.

The containment test pressure is 78.2 psig, as described in Subsection 6.2.1.1.1. Flow testing of the spray system is described in Subsection 6.2.2.4.

6.2.1.1.3 Design Evaluation

The GOTHIC computer code is employed to evaluate the performance of the containment system under postulated accident conditions (Ref. 6.2-1). Both loss of coolant accident (LOCA) and main steam line break (MSLB) events are considered. The GOTHIC model includes an integrated simplified primary system model to calculate the long term (post

reflood) mass and energy release. Using a conservative model prescription, GOTHIC predicts the time dependent containment pressure and temperature and the temperature of the water in the RWSP. The peak conditions are within acceptable limits and pressure at 24 hours after event initiation is less than one-half the peak containment pressure.

6.2.1.1.3.1 GOTHIC Computer Code Overview

GOTHIC is a general purpose thermal-hydraulics code for performing design, licensing, safety and operating analysis of nuclear power plant containments and other confinement buildings. GOTHIC was developed for the Electric Power Research Institute (EPRI) by Numerical Applications, Inc. (NAI) (Ref. 6.2-1). A summary description of GOTHIC capabilities is given below. More detailed descriptions of the code user options, models and qualification are documented in References 6.2-1 through 6.2-3.

GOTHIC solves the conservation equations for mass, momentum and energy for multi-component, multi-phase flow in lumped parameter and/or multi-dimensional geometries. The phase balance equations are coupled by mechanistic models for interface mass, energy and momentum transfer that cover the entire flow regime from bubbly flow to film/drop flow, as well as single phase flows. The interface models allow for the possibility of thermal non-equilibrium between phases and unequal phase velocities, including countercurrent flow. GOTHIC includes full treatment of the momentum transport terms in multi-dimensional models, with optional models for turbulent shear and turbulent mass and energy diffusion. Other phenomena include models for commonly available safety equipment, heat transfer to structures, hydrogen burn and isotope transport.

Conservation equations are solved for up to three primary fields and three secondary fields. The primary fields are steam/gas mixture, continuous liquid and liquid droplet; the secondary fields are mist, ice, and liquid components. For the primary fields, GOTHIC calculates the relative velocities between the separate but interacting fluid fields, including the effects of two-phase slip on pressure drop. GOTHIC also calculates heat transfer between phases, and between surfaces and the fluid. Reduced equation sets are solved for the secondary fields by the application of appropriate assumptions, as described in the reference documents.

The three primary fluid fields may be in thermal non-equilibrium in the same computational cell. For example, saturated steam may exist in the presence of a superheated pool and subcooled drops. The solver can model steam, water and noncondensing gases over of full range of temperature and pressure conditions anticipated for the design basis accidents.

The steam/gas mixture is referred to as the vapor phase and is comprised of steam and, optionally, up to eight different non-condensing gases. The non-condensing gases available in the model are defined by the user. Mass balances are solved for each component of the steam/gas mixture, thereby providing the volume fraction of each type of gas in the mixture.

The mist field is included to track very small water droplets that form when the atmosphere becomes super saturated with steam. The liquid component field allows particles or liquid globules to be tracked in the liquid phase.

The principal element of the model is a control volume, which is used to model the space within a building or subsystem that is occupied by fluid. The fluid may include non-condensing gases, steam, drops or liquid water. GOTHIC features a flexible noding scheme that allows computational volumes to be treated as a lumped parameter (single node) or one-, two- or three-dimensional elements, or any combination of these within a single model.

Turbulence and molecular diffusion are available to predict the transport of mass, momentum and energy due to turbulence and molecular behavior in subdivided volumes. Laminar and turbulent leakage models, which are applicable to lumped parameter and subdivided volumes, are available to predict flow through small and larger cracks, respectively.

Solid structures are referred to in GOTHIC as thermal conductors. Thermal conductors are modeled as one-dimensional slabs for which heat transfer occurs between the fluid and the conductor surfaces and, within a conductor, perpendicular to the surfaces. The one-dimensional thermal conductors can be combined into a conductor assembly to model two-dimensional conduction.

GOTHIC includes a general model for heat transfer between thermal conductors and the steam/gas mixture or the liquid. There is no direct heat transfer between thermal conductors and liquid droplets. Thermal conductors can exchange heat by thermal radiation. Any number of conductors can be assigned to a volume.

Fluid boundary conditions allow the user to specify mass sources and sinks and energy sources and sinks for control volumes. Thermal boundary conditions applied through a heat transfer option on a thermal conductor surface can be used as energy sources and sinks for solid structures.

There are four features in GOTHIC for modeling hydraulic connections, as follows:

- Flow paths
- Network models
- Cell interface connections in subdivided volumes
- 3D connectors for subdivided volumes

Flow paths model hydraulic connections between any two computational cells, which includes lumped parameter volumes and cells in subdivided volumes. Flow paths are also used to connect boundary conditions to computational cells where mass, momentum and energy can be added or removed. A separate set of momentum equations (one for each phase) is solved for each flow path.

Network nodes and links are available specifically for modeling building ventilation or piping systems. These types of hydraulic connections can include multiple branches between connected volumes. Network nodes are assigned to the branch points.

Adjacent cells within a subdivided volume communicate across the cell interface, based on the characteristics of the hydraulic connection. 3D flow connectors define the hydraulic connection across cell interfaces that are common to two subdivided volumes.

GOTHIC includes an extensive set of models for operating equipment. These items, referred to collectively as components, include pumps and fans, valves and doors, heat exchangers and fan coolers, vacuum breakers, spray nozzles, coolers and heaters, volumetric fans, hydrogen recombiners, igniters, pressure relief valves.

Initial conditions allow the user to specify the state of the fluid and solid structures within the modeled region at the start of a transient. These include the initial temperature and composition of the atmosphere, the location and temperature of liquid pools, the location and amount of liquid components, and the temperatures of solid structures within the building.

Additional resources available to expand the realm of situations that can be modeled by GOTHIC include functions, control variables, trips and material properties.

6.2.1.1.3.2 GOTHIC Application to Containment analyses

This subsection provides a brief summary of the methodology used to construct the containment analytical model and the integrated primary system model for the US-APWR containment design evaluation (Ref. 6.2-4).

The US-APWR GOTHIC model is similar to the model used by Dominion in its Surry Plant containment analysis methodology that was previously approved by the NRC (Ref. 6.2-5). Minor model changes for the containment were made to accommodate the US-APWR containment design feature locating RWSP in the containment.

A single volume containment model is used. The water in the RWSP is assumed to form a pool at the bottom of the containment, with appropriate assumptions on the heat and mass transfer at the pool. The model includes thermal conductors for steel and concrete and a model for the spray system.

The approach for long term mass and energy release analysis utilizes an integrated GOTHIC model that calculates both the primary system post reflood behavior following a LOCA and the corresponding containment response. During a LOCA event, most of the vessel water is displaced by the steam generated by flashing. The reactor vessel is then refilled accordingly by the accumulator injection and the high head injection system (HHIS). GOTHIC is not suitable for modeling the reflood period because it involves quenching of the fuel rods, where film boiling conditions may exist. Current versions of GOTHIC do not have models for quenching and film boiling. For the period from LOCA initiation through the end of reflood, the mass and energy release rates are obtained from the SATAN-VI(M1.0) and WREFLOOD(M1.0) codes, as described in Reference 6.2-4, and supplied to the GOTHIC containment model through boundary conditions.

GOTHIC can model the primary system mass and energy release after the core has been recovered. Beyond this time, injection systems continue to supply water to the vessel. Residual stored energy and decay heat comes from the fuel rods. Stored energy in the

vessel and primary system metal are also gradually transferred to the injection water, which eventually spills out of the break and into the containment.

Buoyancy driven circulation through the intact steam generator loops removes stored energy from the steam generator metal and the water on the secondary side. Depending on the location of the break, the water injected into the primary system may pass through the steam generator on the broken loop and pick up heat from the stored energy in the secondary system.

Subsection 6.2.1.1.3.3 summarizes key elements of the containment model. The primary system model is described in Subsection 6.2.1.3 and Reference 6.2-4.

This GOTHIC-based model is used to determine the maximum containment pressure during a worst-case LOCA and also to determine the minimum or conservatively low containment pressure as a function of time that is used for evaluations of the ECCS, which are documented in the accident analyses in Chapter 15. Low containment pressure is conservative for evaluations of the performance of the ECCS during the reflood phase of a large break LOCA. This minimum pressure evaluation is described in Subsection 6.2.1.5.

The GOTHIC computer program is also employed for the evaluation response to secondary steam system piping failures. In these analyses, GOTHIC is used in conjunction with the MARVEL-M computer program. MARVEL-M is the source of the mass and energy flow rates associated with the postulated steam blowdown, which causes the containment pressure and temperature increase. The use of the MARVEL-M computer program in these analyses is described in Subsection 6.2.1.4.

6.2.1.1.3.3 Containment Analysis Methodology

This section provides a summary of the methodology used to develop the containment analysis model for the US-APWR.

Containment Noding

Typical plant licensing analyses for a PWR use a single volume (node) for the containment, with separate treatment given to sump (RWSP) and containment atmosphere regions. Inherent in this lumped parameter approach is the assumption that within each region the fluid is well mixed. During a LOCA or MSLB, the mixing induced by the break jet is significant. Later in the transient, CSS flow continues to promote mixing in the containment.

Although GOTHIC has the capability to model the containment in more detail and calculate the three-dimensional distribution of mass and energy, the lumped parameter approach is used for the US-APWR containment response model. This approach is justified by the experimental series of the Carolinas-Virginia Tube Reactor (CVTR), which were simulated with both lumped parameter and 3D models (Ref. 6.2-3, Ref. 6.2-6). The CVTR tests were typical of an MSLB located high in the containment except that the steam was introduced through a diffuser that reduced the jet momentum and mixing. Results from the subdivided simulations indicate near well-mixed conditions in the upper containment above the operating deck, but significantly lower and varied temperatures

and steam concentrations in the region below the operating deck. The degree of mixing was similar during the steam injection while the containment sprays were active. In the CVTR containment, the operating deck is a major obstruction between the upper and lower containment, and certainly contributed to the non-uniformity of the atmosphere. Experimental results for LOCA type conditions in the Marviken and Heissdampfreaktor (HDR) containments also indicate significant variation in conditions within the containment (Ref. 6.2-7). While these test containments are more compartmentalized than a typical large dry containment, they indicate that some degree of non-uniformity is possible.

Results from lumped and subdivided GOTHIC models for the CVTR tests indicate that the predicted peak pressure and temperature from the lumped analysis are larger than in the subdivided analysis. Prior to the activation of the containment sprays, the major energy removal mechanism during a blowdown is heat transfer to the containment structures due to convection and condensation. Even though there may be less than perfect mixing in the containment, the increased condensation rate in the steam-rich regions more than compensates for the reduced exposure of the containment structures to the steam from the break.

The foregoing justification for a single volume approach to predict peak containment pressure and temperature applies to both DBA LOCA and MSLB conditions. In these accident scenarios, the high energy region in the containment is large even though the entire containment might not be fully mixed and the concrete structures are still absorbing heat when the short duration blowdown is over. After the sprays are activated, the open regions of the containment are expected to be fairly well mixed and the single volume lumped model should be representative of the actual conditions (Ref. 6.2-8).

Containment volume input parameters are selected to ensure that the model gives conservative results. For a given mass and energy release, a low estimate for the free volume will give higher peak pressure and temperature.

The liquid vapor interface area is used to calculate the heat and mass transfer between the vapor and the liquid phase. In the single volume containment model, it is set to zero to isolate the relatively cool water in the RWSP from the remainder of containment. This prevents the energy in the vapor phase from being transferred to the RWSP water resulting in higher peak containment temperature and pressure.

Heat Sinks

Conductors are used to model the thermal capacity of various solid structures inside containment and are the primary heat sink for the blowdown energy. Although two-dimensional conduction solutions are possible with GOTHIC, the one-dimensional conductors are consistent with the lumped modeling approach.

It is neither practical nor necessary to model each individual piece of equipment or structure in the containment with a separate conductor. Smaller conductors of similar material composition are combined into a single effective conductor. In this combination it is important to preserve the total mass and the total exposed surface area of the conductors. The thickness controls the response time for the conductors and is of

secondary importance. Wall conductors are grouped by thickness, with the effective thickness for a group being defined by

$$t_{eff} = \frac{\sum_{i \in group} t_i A_i}{\sum_{i \in group} A_i}$$

Conductors with high heat flux at the surface and low thermal conductivity must have closely spaced nodes near the surface to adequately track the steep temperature profile that develops within the conductor. The Auto Divide feature in GOTHIC is used to obtain appropriate noding. This feature sets the node spacing so that the node Biot number, defined as the ratio of external to internal conductance, is less than 0.1 for each node.

GOTHIC thermal conductors can include multiple layers of different materials. Different layers are used to model painted surfaces, steel liners over concrete surfaces, and the air gap between the liner and concrete. Conduction through stagnant air is assumed for gaps.

The DIRECT heat transfer option of the Diffusion Layer Model (DLM) for condensation in the GOTHIC code is used for all containment heat sinks. The selected DLM option does not include enhancement effects due to film roughening or mist formation in the boundary layer. Under the DIRECT option, all condensate goes directly to the liquid pool at the bottom of the volume. The effects of the condensate film on the heat and mass transfer are incorporated into the formulation of the DLM option.

Under the DLM option, the condensation rate is calculated using a heat and mass transfer analogy to account for the presence of non-condensing gases. It has been validated against seven test sets as reported in the GOTHIC Qualification Report (Ref. 6.2-3). It also compares well with Nusselt's theory for the condensation of pure steam where the rate is controlled by the heat transfer through the condensate film. As shown in the GOTHIC Qualification Report, the DLM option, without enhancement effects due to film roughening and mist formation, generally underpredicts the condensation rate and has previously been accepted for licensing analysis for both LOCA and MSLB (Ref. 6.2-9, Ref. 6.2-10).

The option of natural convection heat transfer for sensible heat transfer is activated as allowed by NUREG-0588 (Ref. 6.2-11). The selected natural convection option is for a vertical wall or cylinder. Although the DIRECT/DLM validation basis includes tests with forced convection heat and mass transfer, forced convection has not been accepted for licensing analysis for peak temperature and pressure, and is not used in the evaluation model.

A characteristic height can be specified for each heat transfer option. This is used to estimate the film thickness that builds up on the conductor. For typical large dry containment conditions, the heat and mass transfer is controlled by the boundary layer in the vapor phase. The resistance through the liquid film is relatively small so the specified height is of secondary or less importance. In the evaluation model with the DLM option, the characteristic height is set to DEFAULT, the node height. This gives thick liquid films

which will slightly reduce the heat and mass transfer rates once the film is fully established. This is conservative for containment pressure and temperature analysis.

For all containment heat sinks, the conductor face that is not exposed to the containment atmosphere is assumed to be insulated. This is accomplished by using the Specified Heat Flux option of the GOTHIC code, with the nominal heat flux set to zero.

Containment Sprays

GOTHIC includes models that calculate sensible heat transfer between the droplets and the vapor and evaporation or condensation at the droplet surface. The efficiency, i.e., the actual temperature rise over the difference between the vapor temperature and the droplet inlet temperature, cannot be directly specified in GOTHIC. The efficiency is primarily a function of the droplet diameter. The GOTHIC models account for the effect of droplet diameter through the Reynolds number-dependent fall-velocity and heat transfer coefficients. A heat and mass transfer analogy is used to calculate the effective mass transfer coefficient, which is used to calculate the evaporation or condensation.

The spray system is modeled with a flow path that draws water from the RWSP at the bottom of containment. Pump, heat exchanger and nozzle components located on the flow path control the water flow and cooling rates and convert the liquid water to droplets before injecting them into the containment atmosphere. The droplet diameter, containment height, deposition area and other input parameters are specified as described in the following paragraphs to achieve a reasonable, but conservative estimate of the overall spray effectiveness.

Spray nozzles typically deliver a spectrum of droplet sizes. Smaller droplets fall more slowly and reach equilibrium with the vapor more quickly than larger droplets because of the larger surface area to mass ratio. GOTHIC does not directly model the droplet size distribution. It is assumed that the specified diameter is the Sauter mean diameter, 0.04in.

A given mass of droplets at the Sauter mean diameter has the same surface area to mass ratio as the actual droplet spectrum. The consistency of the surface area to mass ratio ensures that the heat transfer rate to heat capacity ratio is correctly approximated.

A given mass of droplets at the Sauter mean diameter also has the same total projected area to mass ratio as the actual droplet distribution. Since the deposition rate is given by a balance of the body force and the drag force on the projected area, the fall velocity and deposition rate of the Sauter mean droplets are representative of the full droplet spectrum.

The droplet fall velocity is a function of the droplet drag coefficient. The coefficients used in GOTHIC are those recommended by Ishii and include the effects of a large population of droplets falling together (Ref. 6.2-12).

The droplet heat and mass transfer models have been validated using data from Spillman (Ref. 6.2-13). The GOTHIC predicted evaporation rate is in the middle of the range of evaporation rates from experimental data and rates from correlations. Since evaporation and condensation are controlled by the same mechanism (i.e., turbulent diffusion through

the boundary layer), it is reasonable to expect that GOTHIC fairly represents the condensation rate.

The lumped parameter approach assumes that conditions are uniform throughout the volume. When sprays are injected into a volume, the droplets are assumed to be uniformly distributed throughout the volume regardless of the specified elevation of the junction that carries the spray flow. However, in the actual containment there are typically some regions that are not directly covered by the sprays. The containment geometry parameters must be set to properly account for the spray heat and mass transfer in the covered region.

The heat and mass transfer at the spray droplet surface is determined by the droplet and atmosphere temperatures, the steam content of the atmosphere, the droplet surface area and the heat and mass transfer coefficients. The heat and mass transfer coefficients depend on the fluid properties at the given temperatures, the droplet diameter and pressure, and the fall velocity of the spray droplets.

Appropriate heat and mass transfer coefficients are applied when the droplet diameter is consistent with the actual spray droplet size and if the fall velocity is correct. Spray droplets typically reach their terminal velocity within a few feet of the nozzle and the fall velocity is assumed equal to the terminal velocity for lumped modeling in GOTHIC. The terminal velocity depends on the droplet diameter and the atmosphere properties. GOTHIC calculates appropriate heat and mass transfer coefficients when the spray droplet diameter is set to the actual Sauter mean diameter, as discussed previously.

From the definition of the Sauter mean droplet diameter, the total droplet surface area exposed to the atmosphere is correct when the total droplet volume suspended in the atmosphere is correct. Considering the GOTHIC model definitions for suspended droplet volume and droplet deposition rate, it can be shown that the correct droplet volume and surface area exposed to the containment atmosphere are achieved when the containment volume height is set to

$$H = \frac{V_s}{A_f^c}$$

where V_s is the sprayed volume, assumed to be the upper volume of the operation floor, and A_f^c is the floor area where the droplets are deposited.

The sprayed volume, V_s, depends on the elevation and spacing of the spray headers, the spacing and orientation of the nozzles, and the nozzle spray angle. The deposition area, A_f^c, is set to the total horizontal area at the bottom of the sprayed regions where the spray water collects.

The RWSP water is cooled by the CS/RHR heat exchanger prior to discharging to the containment through the spray header. The heat exchanger surface areas and heat transfer coefficients are specified to match the design value of UA (overall heat transfer

coefficient times area) for the containment spray and component cooling water system (CCWS) heat exchangers.

6.2.1.1.3.4 Description of Containment Analyses

Evaluations have been performed using the evaluation model described in the preceding subsections to determine internal containment vessel conditions following a spectrum of RCS pipe ruptures (LOCA) and MSLB accidents. In these evaluations, all assumptions and the effects of uncertainties and tolerances have been selected to produce conservatively high containment internal pressures.

For the LOCA events, the following cases are analyzed for a break spectrum, as described in Subsection 6.2.1.3.1.

- Double-ended cold leg (pump suction) guillotine break (Discharge coefficient, CD = 1.0)
- Double-ended cold leg (pump suction) guillotine break (C_D = 0.6)
- 3 ft^2 cold leg (pump suction) split break (C_D = 1.0)
- Double-ended hot leg guillotine break (C_D = 1.0)

Initial containment conditions chosen conservatively for the evaluations are listed in Table 6.2.1-4. Assumptions for the containment heat removal and the SI system operability are shown in Table 6.2.1-5. The inherent conservatisms in the assumptions made in the analyses regarding initial containment conditions and containment heat removal are as follows:

- Higher containment initial pressure gives higher air partial pressure and larger heat capacity in the containment atmosphere, which results in higher pressure and lower temperature during the postulated accident. Therefore, maximum initial pressure is assumed for the LOCA analyses, which gives the most severe containment peak pressure. Minimum initial pressure is assumed for the MSLB analyses, which gives the most severe containment temperature.
- Minimum relative humidity is assumed to give higher air partial pressure in the containment atmosphere, which results in higher pressure during the postulated accident.
- Containment initial temperature is assumed to be maximum, to give the highest temperature of the passive heat sinks, and the lowest heat removal from the containment atmosphere during the accident.
- The temperature of RWSP water and the service water is assumed to be design maximum to give minimum heat removal by the containment spray systems.

- RWSP water volume is assumed to be design minimum and does not include ineffective pool volume, so as to overestimate RWSP water temperature during the postulated accident.

- For the containment spray system it is assumed that one train is out of service and another train is lost based on the postulated single failure, which results in the loss of two out of four trains, to minimize containment heat removal.

- The containment spray system is assumed to actuate on the High containment pressure ECCS signal, with a conservative delay. The containment spray system total response time of 243 seconds includes emergency generator startup (for loss of offsite power), block loading of equipment, containment spray pump startup, and spray line filling, with a conservatively large response time assumed for each process. The High-3 containment pressure analytical limit of the containment spray actuation is usually reached before initiation of above containment spray start up time. If not, the containment spray response time is based on the time when the High-3 containment pressure is reached.

The conservatisms in the assumptions made in the LOCA analyses regarding ECCS operability are as follows:

- For the high head injection systems (HHIS), it is assumed that one train is out of service and another train is lost based on the postulated single failure. This results in the loss of two-out-of-four trains. Uncertainty of the SI system is conservatively accounted for in the SI characteristics. A sensitivity analysis confirms that these conditions are limiting, as described later.

- Minimum accumulator water volume and pressure, and maximum injection resistance are assumed to minimize steam condensation by the injected water. Sensitivity analyses confirm that these conditions are limiting, as described later.

- The non-condensable cover gas (nitrogen) in all accumulators is assumed to be released directly to the containment using the boundary conditions in the GOTHIC evaluation model. Total mass of the released nitrogen is calculated on the assumption that the accumulator is depressurized from the initial pressure to atmospheric pressure. The nitrogen temperature is assumed 120°F, which is the maximum operating temperature, although the nitrogen temperature decreases with nitrogen gas expansion as the water is being injected.

The mass and energy flow rates associated with the LOCA are described in Subsection 6.2.1.3, in which the conservatisms in the assumptions for mass and energy release analyses are addressed.

Summary results for each LOCA analyzed are presented in Table 6.2.1-6. These results indicate that the double-ended pump suction guillotine (DEPSG) break, with a discharge coefficient C_D = 1.0 is limiting and the acceptance criteria related to the LOCA analyses are satisfied as follows:

- The design pressure provides at least a 10% margin above the peak calculated containment pressure.

- The containment pressure is reduced to less than 50% of the peak calculated pressure within 24 hours after LOCA.

- The peak containment atmospheric temperature is less than the design temperature.

Table 6.2.1-6 also lists the figures showing the containment pressure, average containment atmospheric temperature, and average RWSP water temperature for each LOCA analyzed.

Sensitivity studies to confirm the analytical conditions for HHSI and accumulator that result in maximum accident pressure and temperature are prepared for the limiting break condition. Table 6.2.1-7 shows the results for the sensitivity studies, listing the figures for the containment pressure, average containment atmospheric temperature, and average RWSP water temperature for each case analyzed. These results demonstrate the following:

- The minimum ECCS flow conditions result in maximum accident pressure and temperature.

- The accumulator water volume, pressure, and injection resistance assumed for the limiting case to minimize steam condensation, as described above, give the most severe results. These parameters, however, do not have large effect on the peak containment pressure and temperature.

For the MSLB events, a spectrum of pipe breaks and power levels are analyzed. The methodology, computer code and assumptions for the MSLB mass and energy release rates are describe in Subsection 6.2.1.4.

The assumptions made in the MSLB analyses regarding initial containment conditions and containment heat removal are as addressed above.

Table 6.2.1-8 summarizes the results of cases performed for various postulated secondary steam system piping break sizes and locations to determine the most severe containment pressure for secondary steam piping system failures. The assumptions made regarding the operating conditions of the reactor and single active failures are also listed in Table 6.2.1-8.

The figures illustrating containment pressure, average containment atmospheric temperature, and average RWSP water temperature, respectively, as a function of time for each case analyzed, are also listed in Table 6.2.1-8.

These results indicate that the MSLB events give much lower containment pressure than the LOCA events though they give much higher atmospheric temperature compared with the LOCA events.

Table 6.2.1-9 lists information relating to structural heat sinks within the containment used in these analyses. Data for both metallic and concrete heat sinks are presented. Table 6.2.1-10 presents material properties of the passive heat sinks. The mesh spacing for the heat sinks is automatically set fine enough to accurately model the internal temperature profile, as described in Subsection 6.2.1.1.3.3. The steel-concrete interface resistance used for steel-lined concrete heat sinks and the containment shell is set to be conservatively high by assuming conduction through the air gap to underestimate the heat transfer rate. The condensing heat transfer coefficients as a function of time for the most severe cold leg (pump suction), hot leg, and steam line pipe breaks are graphically illustrated in Figure 6.2.1-66 through Figure 6.2.1-68.

Table 6.2.1-11 lists selected key events and the times at which they occur following initiation of the transient for the most severe RCS pump suction pipe break. Table 6.2.1-12 lists the distribution of energy at various locations within the containment prior to the event and at certain key times during the transient. Figure 6.2.1-84 provides a graphic display of the integrated energy content of the containment atmosphere and recirculation water, as functions of time. This figure includes also the integrated energy absorbed by the structural heat sinks and removed by the containment spray heat exchangers.

Table 6.2.1-13, Table 6.2.1-14 and Figure 6.2.1-85 provide similar data for the most severe hot leg pipe breaks. As for the steam line break analyses, Table 6.2.1-15 and Table 6.2.1-16 list selected key events for the cases giving the highest containment pressure and the highest containment atmospheric temperature, respectively.

The model utilized in the GOTHIC code for determining the distribution of mass and energy from the postulated breaks in the containment atmosphere and sump can be summarized as follows:

- When the liquid temperature from the break is higher than the saturation temperature in the containment at the total pressure, then liquid from the break is assumed to boil and be divided into the saturated steam and the saturated liquid.

- The separated liquid is injected as droplets with a diameter of 0.004 in. This diameter is small enough to ensure that the droplets reach thermal equilibrium with the containment atmosphere before entering the liquid phase at the bottom of the containment. This assumption maximizes the amount of steam generated from the break flow.

The instrumentation provided to monitor and record containment pressure, temperature, and RWSP water temperature during the course of an accident within the containment is described in Section 7.5.

6.2.1.1.3.5 External Pressure Analysis

In the event of inadvertent spray actuation, PCCV would depressurize until the air becomes approximately the temperature of the spray. A calculation was performed to calculate the maximum outside to inside differential-pressure.

The following conditions were assumed:

a. The air temperature inside PCCV is initially 120°F, which maximizes the temperature differential between the containment atmosphere and the spray, which is at a temperature of 32°F

b. The PCCV pressure is at –0.3psig

c. The relative humidity is at a maximum value of 100%

As the air temperature is reduced, the partial pressure of air decreases from 12.692 psia to 10.765 psia. The steam partial pressure decreases from 1.704 psia to 0.089 psia as the spray condensates steam and cools the atmosphere.

A PCCV pressure of 10.854 psia is produced, causing a differential pressure of 3.842 psig across PCCV, which is lower than the design external differential pressure.

6.2.1.2 Containment Subcompartments

Several reactor system components are located within subcompartments in the containment vessel. High-energy lines are routed inside the subcompartments, such as the branch lines from the reactor coolant piping, feedwater piping, and steam generator blowdown lines.

6.2.1.2.1 Design Basis

To comply with GDC 4 and 50 of 10 CFR 50, Appendix A (Ref. 6.2-14), subcompartments within the containment are designed to withstand the transient differential pressures due to a postulated pipe break.

The US-APWR has the following subcompartments inside the containment:

- Reactor cavity
- Steam generator (SG) subcompartments
- Pressurizer subcompartment
- Pressurizer surge piping room (Underneath the Pressurizer subcompartment, EL. 25 ft.- 3 in.)
- Pressurizer spray valve room (South side of the Pressurizer subcompartment, EL. 50 ft.- 2 in.)
- Regenerative heat exchanger room (Northwest side of the SG subcompartment, EL. 50 ft.- 2 in.)
- Letdown heat exchanger room (South side of the Pressurizer subcompartment, EL. 25 ft.- 3 in.)

Some piping segments of the US-APWR are classified as leak-before-break (LBB). For these components, it is not necessary to analyze the dynamic effects of a postulated pipe rupture, including pipe whip, jet impingement loads, and subcompartment pressurization. Chapter 3, Subsection 3.6.3, discusses LBB criteria and evaluation procedures. One of the subcompartments that does not need to be analyzed is the pressurizer surge piping room, because the pressurizer surge line is classified as LBB.

Analyses are performed to conservatively calculate the peak differential pressure following the most severe specified pipe rupture for each subcompartment. The calculated value is then compared to a differential pressure representing the structural capability of the subcompartment walls, to show the peak differential pressure is within structural capabilities. These analyses are performed using a detailed evaluation model employing the GOTHIC computer program (Ref. 6.2-1).

The evaluation of these postulated subcompartment piping breaks is described in Subsection 6.2.1.2.3. Subsection 6.2.1.2.3 also describes the basis for the selection of the postulated pipe breaks that are analyzed in detail for each subcompartment. This selection process factors in the LBB assessments described in Chapter 3, Subsection 3.6.3.

The US-APWR design does not rely on piping restraints to limit the break area of potential high-energy piping failures within these subcompartments.

6.2.1.2.2 Design Features

Plan drawings of the subcompartments, component, equipment, vent locations and high energy line locations used in the GOTHIC model are provided below.

Vent paths such as openings in the walls, floor gratings, etc are considered in the subcompartment analysis. Vent paths created by the postulated pipe rupture as a result of insulation collapsing are not credited in the analysis.

Reactor Cavity

The reactor cavity consists of a cylindrical narrow gap between the reactor vessel and the concrete primary shield wall, the space under the reactor vessel, and the reactor cavity access tunnel. The area under the reactor vessel is designed to hold molten core debris in case of a Severe Accident (See Figure 6.2.1-70 and Figure 6.2.1-71). In the reactor cavity, four direct vessel injection (DVI) lines are connected to the reactor vessel. The reactor vessel nozzles are considered as the termination points for the high-energy piping. Subcompartment analysis is required for the reactor cavity, as a 4-inch line break therein is assumed.

The reactor cavity has multiple vent paths which are capable of discharging the accident pressure surge into the containment atmosphere. The pressure generated from the pipe break is assumed to discharge to the SG subcompartment through the reactor coolant pipe sleeves (EL. 40 ft.- 4 in.) which penetrate the primary shield wall. The SG subcompartment is open to the containment atmosphere. The pressure is also vented to the bottom chamber through the gap between the reactor vessel and the primary shield wall, through the pressurizer surge piping room (EL. 25 ft.- 3 in.), then through the two

vertical vent openings and the personnel access. The pressurizer surge piping room is open to the SG subcompartment. The paths to the pressurizer surge piping room is not assumed in the analysis in order to obtain conservative results. DCD_06.02.01-22

Steam Generator Subcompartment

Steam generator (SG) subcompartments are composed of the secondary shield walls surrounding the primary loops from the SGs, and are open at the top of each subcompartment (see Figure 6.2.1-72 and Figure 6.2.1-73). The subcompartment walls are designed to protect equipment in other parts of the containment from postulated pipe ruptures inside the subcompartment. High-energy lines are routed in the subcompartment, such as the branch lines from the reactor coolant piping, feedwater piping, and steam generator blowdown lines. The subcompartment analysis is performed under the condition of a 10-inch diameter break of the RHR pump inlet line, an 8-inch diameter break of the RHR pump outlet line connected to the reactor coolant piping and a 16-inch diameter break of the feedwater line because the pressure and temperature conditions and break locations of other lines are covered by these cases.

The subcompartment has an entrance opening for each quadrant at elevations 25 ft.- 3 in. and 50 ft.-2 in. ~~These entrances and the open top of the subcompartment are assumed in the analysis as the vent openings that mitigate the accident pressure surge caused by the postulated pipe break.~~The paths to other SG subcompartments and the floor opening are not assumed in the analysis in order to obtain conservative results. DCD_06.02.01-22

Pressurizer Subcompartment

The pressurizer subcompartment houses the pressurizer and is located inside a secondary shield wall at elevation 58 ft.- 5 in. The subcompartment analysis is performed under the condition of an 8-inch diameter break of the pressurizer pressure relief line and a 6-inch diameter break of the pressurizer spray line because the pressure and temperature conditions and break locations of other lines are covered by these cases.

While the top of the subcompartment is covered by a concrete ceiling, two personnel accesses are provided for the purpose of maintenance and inspection of the pressurizer relief valve, as shown in Figure 6.2.1-74 and Figure 6.2.1-75. The discharge pressure from the accident is vented into the containment atmosphere through these openings. An entrance from the SG subcompartment is also provided at the bottom of the Pressurizer subcompartment, at elevation 58 ft.- 5 in.

Pressurizer Surge Piping Room

The pressurizer surge piping room is located underneath the pressurizer room at elevation 25 ft.- 3 in. Since the LBB is applied for the 16-inch pressurizer surge line, a postulated pipe break is not considered in this subcompartment (See Figure 6.2.1-70).

Pressurizer Spray Valve Room

Pressurizer spray valve rooms are located outside the secondary shield wall, and adjacent to the pressurizer subcompartment at elevation 50 ft.- 2 in. These rooms are

intended to provide access to the pressurizer spray control valves. There is no postulated pipe break location in the pressurizer spray valve room, because the terminal ends of pressurizer spray line are not located in the pressurizer spray valve room and pressurizer spray line in the pressurizer spray valve room is designed that the maximum stress range and the cumulative usage factor as calculated by the ASME Code, Section III does not exceeds the allowable in accordance with the criteria described in subsection DCD 3.6.2.1.1.2.

Regenerative Heat Exchanger Room (Northwest of SG Subcompartment, EL.50'-2")

The regenerative heat exchanger room and the regenerative heat exchanger valve room are located outside secondary shield walls, at elevation 50 ft.- 2 in. (See Figure 6.2.1-78). High-energy lines associated with the chemical and volume control system (CVCS), considered as the postulated pipe break, are routed through the room. The subcompartment analysis is performed under the condition of a 4-inch diameter break of the charging line and a 3-inch diameter break of the letdown line. The personnel access to the room and additional openings are the vent paths to the containment atmosphere.

Letdown Heat Exchanger Room (South Side of Pressurizer Subcompartment, EL.25'-3")

The letdown heat exchanger room is located outside the secondary shield walls, at elevation 25 ft.- 3 in. (See Figure 6.2.1-79). A high-energy line routed in the room, associated with CVCS, is considered as the postulated pipe break. The subcompartment analysis is performed under the condition of a 4-inch diameter break of the charging line and a 3-inch diameter break of the letdown line. The personnel access and additional vent openings are the vent paths to the containment atmosphere.

6.2.1.2.3 Design Evaluation

The GOTHIC computer code is used for the subcompartment differential pressure analysis (Subsection 6.2.1.1.3.1 and Ref. 6.2-1).

Mass-energy releases used for subcompartment analyses are basically calculated by the approach to assume a constant blowdown profile using the initial conditions with an appropriate choked flow correlation (Ref. 6.2-15). The analytical approach with the computer code and volume noding of the piping system similar to those of small-break LOCA analyses is used for some subcompartments, depending on the margin of the design pressure (Ref. 6.2-16).

Initial plant operating conditions assumed for mass and energy releases are the same as those described in Subsections 6.2.1.3 and 6.2.1.4 for postulated primary and secondary piping breaks, respectively.

The initial atmospheric conditions within a subcompartment are set to maximize the resultant differential pressure according to Standard Review Plan (SRP) 6.2.1.2 (Ref. 6.2-17). Air at the maximum allowable temperature, minimum absolute pressure, and zero percent relative humidity is assumed.

Assumptions with regard to the distribution of mass and energy release are biased towards maximizing the subcompartment pressure, conforming to SRP 6.2.1.2. Although the GOTHIC code solves conservation equations for up to three fields (i.e., steam/gas mixture, continuous liquid and liquid droplet), the vent flow behavior through all flow paths within the nodalized compartment model is treated as a homogeneous mixture in thermal equilibrium, with the assumption of 100-percent water entrainment by applying code options to force thermodynamic and velocity equilibrium and prevent the deposition of drops in the volumes. The homogeneous equilibrium is used for vent choking.

The evaluation models do not take credit for the vent areas that change during the transient as a result of insulation collapsing.

A separate GOTHIC evaluation model is prepared for each subcompartment. In these models, each subcompartment is divided into nodes, with paths defined to model the transfer of mass and energy between nodes during the analyzed transient. The subcompartment nodalization scheme is selected so that nodal boundaries are at the location of flow obstructions or geometry changes within the subcompartment. These discontinuities create pressure differentials across nodal boundaries. Within each node, no significant discontinuities exist, resulting in a negligible pressure gradient within each node. A sensitivity study that increases the number of nodes until the peak calculated pressures converge (i.e., increase in the number of nodes results in small pressure changes) is conducted to verify the nodalization scheme.

A list of high-energy lines within each subcompartment is developed. For each subcompartment, the high-energy lines excluded from pipe rupture considerations for dynamic effects from postulated pipe failure due to application of the LBB criterion discussed in Subsection 3.6.3 are excluded from consideration in the subcompartment analysis. The remaining lines are grouped according to the pressure and temperature of the fluid in the line. Certain lines may be excluded from further analysis on a qualitative basis (i.e., the mass and energy of the lines located in the subcompartment are compared, to eliminate those lines that clearly do not challenge the bounding failure). A detailed pipe break simulation is performed for the largest diameter line in each group in each subcompartment from the lines that remain under consideration. Table 6.2.1-17 provides information about the pipes considered for evaluation of the each subcompartment.

The analyses generate the mass and energy release as a function of time, the pressure response as a function of time, and the flow conditions (sonic or subsonic) for all vent paths up to the time of peak pressure. This information is generated for each subcompartment for the postulated pipe breaks selected using the methodology above.

The structural design differential pressure of each subcompartment is determined from MHI's PWR design experience in Japan. The calculated peak differential pressures during the piping break transients for each subcompartment are compared to the structural design differential pressures described in Subsection 3.8.3.3. This comparison demonstrates that the subcompartment walls withstand the peak differential pressures during postulated breaks of any high-pressure line within any subcompartment. Reference 6.2-18 describes results of the analyses including detailed analytical conditions and the sensitivity study related to the number of nodes.

6.2.1.3 Mass and Energy Release Analysis for Postulated Loss-of-Coolant Accidents

A postulated loss-of-coolant accident (LOCA) transient is typically divided into the following four phases:

1. Blowdown phase - which includes the period from accident initiation (when the reactor is operated at full power) to the time that the RCS pressure reaches equilibrium with containment.

2. Refill phase - the period when the lower plenum is being filled by ECCS injection water up to the bottom of the core. This period is conservatively ignored to maximize the release rate to the containment in the evaluation model described later.

3. Core reflood phase - begins when the water from the lower plenum enters the core and ends when the core is completely quenched.

4. Long-term cooling phase - describes the period after the core has been quenched and energy is released to the containment via reactor coolant by the RCS metal, core decay heat, and the steam generators.

The mass and energy release is evaluated by a model based on the SATAN-VI(M1.0), WREFLOOD(M1.0), and GOTHIC computer codes. This evaluation model, which covers the blowdown, refill, core reflood, and long term cooling phases associated with these accidents, is described in Reference 6.2-4. Reference 6.2-4 also describes modifications made to the SATAN-VI and WREFLOOD computer programs to model advanced features incorporated into the US APWR design. The computer programs with these modifications are referred to as SATAN-VI(M1.0) and WREFLOOD(M1.0), respectively.

6.2.1.3.1 Break Size and Location

The containment receives mass and energy releases following a postulated LOCA. Three distinct locations in the reactor coolant system (RCS) loop can be postulated for pipe rupture:

- Hot leg (between reactor vessel and steam generator)
- Cold leg (pump discharge: between reactor coolant pump and reactor vessel)
- Cold leg (pump suction: between steam generator and reactor coolant pump)

The following is a discussion on each break location.

A double-ended hot leg guillotine (DEHLG) break potentially results in the highest blowdown mass and energy release rates, because it results in the largest heat transfer from the core due to the minimum flow resistance between core outlet and the break location. Although the core flooding rate also would be highest for this break location, the amount of energy released from the steam generator secondary side is minimal because

the majority of the fluid which exits the core bypasses the steam generators in venting to the containment. As a result, the reflood mass and energy releases are reduced significantly as compared to either the pump suction or pump discharge cold leg break locations, where the core exit mixture must pass through the steam generators before venting through the break. Therefore the reflood and subsequent post-reflood releases are not typically calculated for a hot leg break for plants similar to the US-APWR. The mass and energy releases for the hot leg break blowdown phase are included in the scope of the containment integrity analysis.

The double-ended cold leg guillotine pump discharge (DECLG) break location is much less limiting in terms of the overall containment peak pressure than the double-ended pump suction guillotine break (DEPSG). The DECLG break blowdown is faster than that for the DEPSG and more mass is released into the containment. However, the core heat transfer is greatly reduced, and this results in a considerably lower energy release into containment.

During the core reflood phase, due to the maximum flow resistance between core outlet and the break location, the flooding rate and the amount of energy released from the broken-loop steam generator secondary side are much less than for the DEPSG break. This results in a much lower energy release rate into the containment.

Also, during the long-term cooling phase, the energy release rate into the containment is less than that of the DEPSG break. This is because of larger flow resistance between the core outlet and break location, which results in reduced energy released rate from the steam generator secondary side. Therefore, the DECLG break is usually not selected for performance of a containment analysis.

The DEPSG break combines the effects of the relatively high core flooding rate, as in the hot leg break, and the addition of the stored energy from the steam generators. As a result, the DEPSG break yields the highest energy flow rate during the post-blowdown period by including all of the available energy of the RCS in calculating the releases to containment. This break location is the limiting break for typical dry containment plants and is the limiting break location for the US-APWR.

The spectrum of breaks analyzed includes the largest hot leg breaks and a range of cold leg (pump suction) breaks from the largest down to 3.0 ft^2. Small pump suction breaks are representative cases for the spectrum of break size, because the DEHLG and DECLG breaks are much less severe than DEPSG break as discussed above.

6.2.1.3.2 Mass and Energy Release Data

Table 6.2.1-18 and Table 6.2.1-19 present the calculated mass and energy releases for the blowdown phase of the break analyzed for the double-ended pump suction and DEHLG breaks, respectively.

Table 6.2.1-20 presents the calculated mass and energy release for the reflood phase of the DEPSG break with minimum safety injection. The DEHLG break is evaluated only for the blowdown phase as described in the preceding subsection.

Table 6.2.1-21 presents the long-term cooling phase mass and energy release data for the DEPSG break with minimum safety injection.

The safety injection is directed to the downcomer and does not spill from the break directly to the containment floor.

6.2.1.3.3 Energy Sources

The following are taken into account as energy sources in the LOCA mass and energy calculation:

- Decay heat
- Core stored energy
- Reactor coolant system fluid and metal energy
- Steam generator fluid and metal energy
- Accumulators
- Refueling water storage pit (RWSP)
- Metal-water reaction (described in Subsection 6.2.1.3.8)

The methods and assumptions to conservatively calculate energy available for release from these sources are described in Reference 6.2-4. The conservatism in the calculation of the available energy for each source is addressed as follows:

- Margin in volume of 3 percent (which is composed of 1.6 percent allowance for thermal expansion and 1.4 percent for uncertainty)
- Allowance for calorimetric error (+2 percent of core power)
- Maximum core stored energy considering fuel burn-up and uncertainty in the calculation of fuel temperature
- Margin in core stored energy (+20 percent)
- Maximum expected operating temperature of the reactor coolant system
- Allowance in RCS fluid temperature for instrument error and dead band (+4.0°F)
- Allowance for RCS pressure uncertainty (+30 psi)
- Maximum steam generator mass inventory
- Metal-water reaction from one percent of the zirconium in the active core cladding

The stored energy sources and the amounts of stored energy are listed in Table 6.2.1-24. The curves for the energy release rate and integrated energy released for the decay heat are shown in Figure 6.2.1-69.

The consideration of the various energy sources in the mass and energy release analysis provides assurance that all available sources of energy are included in this analysis. Thus, the review guidelines presented in SRP Subsection 6.2.1.3 are satisfied.

6.2.1.3.4 Description of the Blowdown Model

A description of the model used to determine the mass and energy released from the RCS during the blowdown phase in a postulated LOCA is provided in Reference 6.2-4. All significant correlations are discussed.

6.2.1.3.5 Description of the Core Reflood Model

A description of the model used to determine the mass and energy released from the reactor coolant system during the reflood phase of a postulated LOCA is provided in Reference 6.2-4. All significant correlations are discussed.

6.2.1.3.6 Description of the Long-Term Cooling Model

The calculation procedures used to determine the mass and energy released during the post-reflood phase of a postulated LOCA are described in Reference 6.2-4.

6.2.1.3.7 Single Failure Criteria

Loss of offsite power (LOOP) is assumed in the analyses of mass and energy release. When the LOOP is assumed, the safety injection (SI) system is not credited for the blowdown period. It is assumed that one train of the Engineered Safety Features (ESF) is out of service. The single active failure that maximizes the energy release to the containment is the failure of one additional ESF.

This results in the loss of two trains of safeguards equipment. A sensitivity analysis is performed on the effects of the single-failure criterion for the limiting break. The sensitivity case assumes maximum safeguards SI flow where four trains are available. Uncertainty of the SI system is also taken into account conservatively for both the minimum and maximum safeguards SI characteristics. This sensitivity analysis provides confidence that the effect of credible failure is bounded.

6.2.1.3.8 Metal-Water Reaction

The LOCA analysis, presented in Chapter 15, demonstrates compliance with 10 CFR 50.46 criteria. It shows that the cladding temperature does not rise high enough for the rate of the metal-water reaction heat to be of any significance. However, the energy release associated with the reaction from 1 percent of the zirconium in the active core cladding, which is one of the acceptance criteria for the LOCA analysis in Chapter 15, has been considered. This results in additional conservatism in the mass and energy release calculations since the actual whole core oxidation presented in Chapter 15 is much lower. The oxidation occurs before the whole core is quenched and the metal-water reaction time is assumed to occur during the blowdown phase through the reflood phase.

6.2.1.3.9 Energy Inventories

Table 6.2.1-12 and Table 6.2.1-14 provide the total energy transferred from the primary and secondary systems to the containment, as well as the energy remaining in the primary and secondary systems for each source. Table 6.2.1-32 and Table 6.2.1-33 show mass and energy distribution with additional information concerning inventories, injections, generated energy and effluent. Values in Table 6.2.1-12, Table 6.2.1-32 and Table 6.2.1-33 are for the worst cold-leg pump suction break, and those in Table 6.2.1-14 are for hot-leg pipe break at the following times:

- Time zero (initial conditions).
- End of blowdown time.
- End of reflood time.
- Time of peak pressure.
- Time of full depressurization (1 day or End of Analysis).

6.2.1.3.10 Additional Information Required for Confirmatory Analysis

Table 6.2.1-22 lists elevations, flow areas and hydraulic diameters within the primary system that are used for these analyses to enable confirmatory analyses to be performed.

The SI flow rate as a function of time is presented in Table 6.2.1-23 for the worst DEPSG break.

6.2.1.4 Mass and Energy Release Analysis for Postulated Secondary-System Pipe Ruptures Inside Containment

This section describes the analysis used to define the mass and energy release input data for evaluating the containment response to a variety of main steam system pipe breaks. Because the containment response to the main feedwater pipe ruptures is not limiting with respect to either temperature or pressure, the mass and energy release analysis in this section is presented for only the main steam system pipe breaks inside containment. The mass and energy release analysis performed on the nuclear steam supply system (NSSS) is separate from the containment response analysis. Different sets of assumptions regarding single failures and availability of offsite power may be made for these two analyses for the purpose of assuring that the analyzed containment response bounds combinations of plant operating conditions, break characteristics, and pertinent combinations of assumed failures.

6.2.1.4.1 Sequence of Events and Effects of Transient Phenomena

This section describes the expected sequence of events and system response to the accident. Analysis assumptions and inputs are discussed in Subsection 6.2.1.4.2.2.

Steam system piping failures inside the reactor containment could cause releases of high-energy fluid to the containment interior, which may cause high containment temperatures and pressures. The temperature and pressure response of the containment depends on the time-dependent mass flow and enthalpy of the break effluent added to the containment (mass and energy release). A mass and energy release transient that results in the limiting containment peak pressure may not be the same transient that results in the limiting peak temperature. To assure that the containment response is bounding, a number of mass and energy release cases are defined and analyzed, representing a wide spectrum of plant operating conditions (initial power, availability of offsite power), in conjunction with a wide spectrum of size, type and locations of the piping failure.

In order to understand the basis for selecting the specific cases included in this analysis, an understanding of the double-ended guillotine break (DEGB) and the split break is essential.

A DEGB is a break in a main steam line inside containment where the steam line breaks circumferentially and separates so that the blowdowns from the two ends are independent. Because the steam lines are connected to a common header outside containment, a single steam generator would blow down into containment through one pipe end and the others would blow down into containment through the other, ignoring main steam check valves. The US-APWR design includes a uni-directional main steam isolation valve in series with a main steam check valve in each steam line downstream of the containment penetration. In addition, each steam generator is equipped with a flow restrictor integral to the steam generator outlet nozzle having a flow area of 1.4 ft^2. If all of the valves were to function as designed, only the affected steam generator would blow down to the containment due to the main steam check valve in its steam line. This analysis assumes the failure of the steam line check valve. With that assumption, the "intact" steam generators also blow down to the containment through the flow restrictors, and the other end of the DEGB, until they are isolated by their main steam isolation valves.

A split break is a break in a steam line that does not result in circumferential failure or separation of the pipe at the break location. If a split break were to occur in one of the steam lines (again assuming the failure of its main steam check valve), all of the steam lines would "share" its total break area prior to steam line isolation. Only the faulted loop would blow down through the break after steam line isolation. The effective break sizes for the faulted loop and intact loops would depend on the size of the split break relative to the steam generator flow restrictor.

Another important factor in defining the representative and limiting cases to analyze for mass and energy release is the automatic steam line isolation logic and its response to breaks of different sizes. A steam line isolation signal results from a low main steam line pressure in any loop, or a high-high containment pressure. The time for a low main steam line pressure signal to occur is shortened for increasing negative steam line pressure rates. The rate of pressure change is dependent on the break size. For the DEGBs, the low steam line pressure provides an immediate steam line isolation signal. The time to close the main steam isolation valves (MSIVs) includes the time when the

analytical limit is reached (depending on the break size), plus signal delay time, plus valve closure time.

Larger split breaks will also result in a low main steam line pressure signal before the high-high containment pressure signal occurs. As the split break area is decreased, the times of the steam line isolation signals on low main steam line pressure and high-high containment pressure will approach each other. The largest break areas which will not generate a steam line isolation signal from a low main steam line pressure are different at different initial power levels, due to differences in the blowdown transients. Breaks smaller than this critical area are less limiting due to their more gradual containment pressure increase, and breaks larger than this area will be less limiting due to the shorter duration of the contribution of the intact loops to the containment mass and energy release.

As a result, the cases selected to be analyzed include the DEGB at various power levels from hot standby to 102% of full power (in 25% increments), the limiting split breaks (based on the discussion above) at zero and full power, and the DEGBs at zero and full power assuming a loss of offsite power.

These cases are defined and summarized in Table 6.2.1-25.

A typical progression of a DEGB from hot standby as it relates to mass and energy release to containment is as follows.

The DEGB results in an instantaneous initial increase in steam flow, which gradually decreases during the accident as the steam pressure falls. The energy removal from the reactor coolant system (RCS) causes a reduction in coolant temperature and pressure. In the presence of a negative moderator temperature coefficient, the cooldown results in an insertion of positive reactivity. The effect is the largest at the end-of-cycle. The cooldown and associated positive reactivity addition may be sufficient to cause the core to return to power with all the rod cluster control assemblies (less the most reactive rod) fully inserted. In the analysis, the main steam check valve is assumed to fail in the faulted loop. The blowdown to containment is uniform with an effective break area of 1.4 ft^2 per loop, three loops blowing down through one end of the pipe, and the remaining steam generator blowing down through its steam line. The sudden decrease in steam line pressure results in an immediate steam line isolation signal on low main steam line pressure. The same signal also actuates the emergency core cooling system (ECCS). The ECCS signal also isolates the main feedwater and actuates the emergency feedwater (EFW).

After steam line isolation, the affected steam generator continues to blow down through the faulted steam line. Assumptions are made for various input parameters to maximize heat generated in the RCS or transferred to the RCS, to maximize heat transferred to the affected steam generator secondary fluid, and to minimize the cooldown of the faulted and intact steam generators. Following steam line isolation, the RCS cooldown becomes non-uniform, and assumptions for various input parameters are made to maximize heat transferred to the affected steam generator and allow the intact steam generators to transfer heat back to the RCS. The EFW flow to the affected steam generator is automatically isolated. The mass and energy release is terminated when the secondary inventory is depleted.

The core is ultimately shut down by a combination of the high concentration boric acid water delivered by the ECCS and the termination of the cooldown when the steam generator inventory is depleted. Core response and shutdown after the affected steam generator blows down is not of concern in this analysis.

DEGB cases initiating from at-power conditions behave in a similar manner, except that the reactor is tripped, shut down, and returns to power. A higher initial core power generates increased decay heat and release of stored heat from both RCS and SG metal. In addition, the decrease in initial steam generator water mass as initial power level increases affects the rate and duration of the blowdown.

The loss of offsite power cases are very similar, but result in less heat transfer from the affected steam generator. The ECCS signals generated from low pressurizer pressure, low main steam line pressure, or high containment pressure, trip the reactor coolant pumps (RCPs). The RCP trip is ignored for the cases with offsite power available to maximize the RCS cooldown and associated reactivity and return-to-power response.

The split breaks differ from the DEGBs in that steam line isolation, ECCS, and the other engineered safety feature functions do not occur immediately. Due to their smaller break flow, the response of these breaks results in a smaller cooldown and return to power, but a more prolonged blowdown due to the later steam line isolation time and continued addition of feedwater prior to steam line and feedwater isolation.

For at-power cases, the following signals are assumed to be available to automatically trip the reactor (but are not necessarily credited in the analysis):

- ECCS actuation (low main steam line pressure in any loop, low pressurizer pressure, or high containment pressure)
- Over power ΔT
- Over temperature ΔT
- Low pressurizer pressure
- High power range neutron flux

In addition to the reactor trips listed above, the following engineered safety feature functions are assumed to be available to mitigate the accident:

- Main steam line isolation
- Main feedwater isolation
- EFW isolation on the affected SG
- ECCS

Also, the main steam check valves are provided downstream of the main steam isolation valves to prevent blowdown of the steam generators by reverse flow through the postulated piping failure in the event the break is upstream of a main steam check valve. The main steam isolation valves, which provide positive flow isolation in the normal direction of flow, are fully closed by the following signals:

- Low main steam line pressure
- High main steam line pressure negative rate
- High-high containment pressure

Only safety related equipment is credited in the analysis to mitigate the consequences of this event. As discussed above, some of the available equipment is not credited in the analysis.

6.2.1.4.2 Steam System Performance during the Postulated Blowdown Transient

6.2.1.4.2.1 Evaluation Model

The mass and energy release from a postulated steam piping failure (main steam line break) is evaluated with a model based on the MARVEL-M plant transient analysis code (Ref. 6.2-19). The evaluation model for the mass and energy release analysis of the main steam line break is the same as described for the core response to the same event in Subsection 15.1.5.3.1, except that for code inputs reflecting certain conservative assumptions made for the two different analyses. Key elements of the MARVEL-M model related to the mass and energy release analysis for the main steam line break that differ from the description in Subsection 15.1.5.3.1 are described in the following paragraphs.

For calculating mass and energy releases, a reverse steam generator heat transfer model is used to transfer heat back to the primary side from the intact steam generators after steam line isolation occurs to maximize the mass and energy release to containment from the faulted loop. In addition, the unisolated volume of the main feedwater line is modeled to consider feedwater flashing, providing additional feedwater to the affected steam generator.

The reactor trip system, engineered safety features (ESF) actuation system, and the ESF sub-systems credited in the steam line break mass and energy release analyses are modeled in the MARVEL-M code. Because MARVEL-M models only the NSSS, containment vessel response and the ESF containment signals are not directly modeled in the MARVEL-M code. ESF signals generated from containment pressure signals credited in the MARVEL-M mass and energy release analysis for certain breaks are obtained from the containment response analysis and manually input to MARVEL-M.

Additional details on selected MARVEL-M capabilities used in the steam line break mass and energy release analysis are described with applicable input parameters in the following subsection.

6.2.1.4.2.2 Input Parameters and Initial Conditions

The following input parameters and initial conditions are used in the MARVEL-M analysis. Unless otherwise stated, these inputs are common to all of the steam line break mass and energy analysis cases.

- To reduce the number of cases analyzed, failures were combined to create a set of limiting composite cases rather than evaluate a larger number of individual cases each characterized by a single failure. As a result, a Failure Modes and Effects Analysis is not needed or used to document how single failures are evaluated to determine the limiting single failure. The failures assumed in each of the composite cases are identified in Table 6.2.1-25, and are individually discussed below.

- The initial values of reactor power are 0%, 25%, 50%, 75%, and 102% for the hot standby and at-power cases. Because the intermediate power cases are run for the purpose of establishing sensitivity of the results to initial power level, the actual power level (without uncertainty) is used. For the full-power cases, a 2% uncertainty is added to the initial power to maximize the heat generated in the primary system.

- The nominal value of reactor coolant pressure, 2,250 psia, is used for the hot standby cases. For the at-power cases, an uncertainty of 30 psi is added. Unlike the departure from nucleate boiling ratio (DNBR) core response analysis for this event, RCS pressure is not a key parameter in the mass and energy release analysis. Similarly, the initial pressurizer water level is not a key parameter and is assumed to be at the programmed value associated with the initial power.

- The initial value of reactor coolant average temperature is assumed to be the 557°F no-load temperature for the hot standby cases. For the at-power cases, an uncertainty of 4°F is added to the normal expected average temperature corresponding to the power level.

- The shutdown margin is assumed to be 1.6% Δk/k corresponding to the most restrictive time in the core cycle, with the most reactive rod cluster control assembly (RCCA) in the fully withdrawn position for the cases initiating from hot standby. For the at-power cases, the reactor trip reactivity is assumed to be the value that would result in this same shutdown margin at zero power conditions.

- For the cases initiating from hot standby, the moderator defect follows the relationship defined by Figure 15.1.4-1 and the Doppler defect follows the relationship defined by Figure 15.1.4-2 for the steam line break core response analysis in Subsection 15.1.5. For the full-power cases, the moderator density coefficient is assumed to have the maximum value as defined in Subsection 15.0.0.2.4 and the Doppler power coefficient is assumed to be the minimum feedback limit shown in Figure 15.0-2. For the intermediate power cases (25%, 50%, & 75%), the moderator defect follows the relationship defined by Figure 15.1.4-1 and the Doppler power coefficient is assumed to be the minimum

feedback limit shown in Figure 15.0-2. These combinations result in the greatest positive reactivity and maximum power increase.

- Although the safety injection performance has little effect on the mass and energy releases, minimizing the addition of boron is conservative. Consistent with this assumption, only two safety injection pumps operate to inject borated water from the refueling water storage pit (RWSP) into the reactor vessel downcomer. This treatment is consistent with one train assumed to fail and a second train is out of service. The boron concentration in the RWSP is assumed to be 4000 ppm, corresponding to the minimum allowable Technical Specification boron concentration value.

- A dry steam blowdown (steam quality = 1.0) is assumed. This assumption maximizes the energy released from the break. The Moody curve for f(L/D) = 0 is used for calculating the steam flow from the break (Ref. 15.1-4).

- Feedwater flow to the affected steam generator is assumed considering increased feedwater pump flow caused by the reduction in steam generator pressure as follows:
  For the double-ended break, main feedwater flow is assumed to be the maximum flow based on the assumption that the steam generator is at atmospheric pressure. For split breaks, main feedwater flow is assumed to match the total steam flow (including the break flow) in each steam generator until main feedwater isolation occurs. This maximizes the steam generator mass available to be released to the containment. In all cases, the maximum feedwater enthalpy consistent with the initial power is assumed.

- EFW is assumed to be initiated at the time of the ECCS signal (t = 0 is conservatively used for the DEGBs) and deliver flow at maximum flow to the affected steam generator for the purpose of maximizing the blowdown inventory. The maximum value for EFW enthalpy is assumed to maximize secondary side energy (all steam generators). The EFW is automatically isolated from the affected steam generator when the low main steam line pressure signal reaches the analytical limit.

- The mass and energy release analysis conservatively includes decay heat (maximum value) to maximize the energy addition to the RCS and the RCS temperature. The total decay heat is calculated in accordance with the methodology of ANS-5.1-1979.

- A reverse heat transfer coefficient is used to transfer heat from the secondary back to the primary when the steam generator temperature is warmer than the primary coolant in the steam generator tubes. This occurs in the intact steam generators after steam line isolation, and maximizes heat input to the primary, resulting in a more conservative mass and energy release.

- The steam generator heat transfer is not assumed to be reduced after steam generator level decreases below the top of the tubes. This maximizes the conservative effects described with the heat transfer coefficients above.

- Energy stored in certain RCS and steam generator metal is modeled, and is allowed to be transferred to the primary coolant in contact with it. This results in a more conservative mass and energy release.

- The faulted steam line is modeled on the loop with the pressurizer. This result in warmer pressurizer water flow being directed into the affected steam generator, resulting in a more conservative mass and energy release.

- Conservative assumptions for the trip simulation (trip reactivity curve, rod drop time, reactor trip system signal processing delays) are used in the analysis of at-power cases. RCCA insertion characteristics assumed in the analysis are described in Subsection 15.0.0.2.5. This results in a conservatively high integrated heat input to the RCS.

- For the large double-ended guillotine breaks, the reactor is assumed to automatically trip on the low main steam pressure signal (which also initiates ECCS, steam line isolation, and other EFW functions). For the smaller split breaks containment pressure signals are credited in the mass and energy analysis. An ECCS signal occurs on high containment pressure, which in turn trips the reactor, isolates main feedwater, and starts safety injection. Main steam flow is isolated by the high-high containment pressure signal. Table 15.0-4 summarizes the trip setpoints and signal delay times used in the analysis.

- For cases assuming availability of offsite power, the RCPs are assumed to operate for the entire duration of the mass and energy release transient. This is conservative because the RCPs add thermal energy to the RCS while they are running, maximize the primary cooldown (and associated return to power), and distribute the reverse heat transferred from the intact steam generators to the RCS. The US-APWR has an automatic RCP trip on an ECCS signal; this is ignored for the cases assuming offsite power available. For the cases analyzed without offsite power, the RCPs are assumed to trip on the ECCS signal (which occurs immediately after the break in the model for the cases evaluating offsite power).

- The failure of one main feedwater isolation valve is assumed. Because the main feedwater regulation valves and main feedwater isolation valves are redundant, a single failure of one of these valves does not affect the feedwater isolation function. Feedwater isolation from ECCS actuation is modeled in MARVEL-M, using the signal and valve closure delays provided in Tables 15.0-4 and 15.0-5. However, since feedwater flashing provides additional feedwater to the affected steam generator from the water remaining in the feedwater line, the unisolated volume of the main feedwater line from the feedwater regulation valve (upstream valve) to the steam generator is assumed.

- The main steam check valve is assumed to fail in the loop where the break inside containment occurs. This failure assumption results in all steam generators blowing down to the containment until steam line isolation occurs. This assumption is particularly important (and conservative) for the split breaks where steam line isolation does not occur immediately on low main steam line pressure,

but rather, relies on containment pressure signals. Steam line isolation from ECCS actuation is modeled in MARVEL-M, using the signal and valve closure delays provided in Tables 15.0-4 and 15.0-5.

- Because each of the steam generators is equipped with a 1.4 ft^2 flow restricting nozzle in its outlet, and because the flow area of any individual steam line is greater than 4.2 ft^2 (three times the area of a flow restricting nozzle), the modeled break area for DEGBs, assuming the main steam check valve failure, is assumed to be 1.4 ft^2 per loop prior to steam line isolation and 1.4 ft^2 for the only the faulted loop after steam line isolation.

- For split breaks, the break area will be equally shared between the loops prior to steam line isolation (assuming a main steam check valve failure in the faulted loop). After steam line isolation, the break area is the lesser of the split break area and 1.4 ft^2 is applied to only the faulted loop steam generator.

- Initial steam generator water mass is calculated based on the normal level at the initial power plus both a steam generator level uncertainty and a steam generator mass calculational uncertainty.

- No operator actions are modeled in the mass and energy response analysis.

Table 6.2.1-25 lists specific assumptions used that differentiate each case.

6.2.1.4.2.3 Evaluation Results

Table 6.2.1-26 and Table 6.2.1-27 are tabulations of the mass and energy release data for the steam piping failure case resulting in the highest containment pressure and temperature.

The mass and energy release data to containment for the limiting pressure and temperature cases include the energy transferred from the primary system to the secondary system. The mass and energy releases assume dry (100% quality) steam, and no water entrainment is modeled. As a result, steam generator internal elevations, flow areas, and friction coefficients are not used in the simplified secondary side model in MARVEL-M. As a result, values for these parameters are not provided for use in performing confirmatory analysis. Main feedwater flow and enthalpy assumptions for the affected steam generator are described above in Subsection 6.2.1.4.2.2.

The containment pressure and temperature transients and peak temperature and pressure resulting from this mass and energy release data are analyzed separately and described in Subsection 6.2.1.1.3.

6.2.1.5 Minimum Containment Pressure Analysis for Performance Capability Studies of the Emergency Core Cooling System

The containment pressure and temperature responses, as well as the in-containment RWSP water temperature response, used for the ECCS performance analysis found in Subsection 15.6.5 are presented in Figure 6.2.1-80 through Figure 6.2.1-82.

6.2.1.5.1 Analytical models

The GOTHIC computer code is used to calculate the time dependent minimum containment backpressure for the ECCS performance evaluation in coping with a postulated LOCA (i.e., cold leg guillotine and split breaks). The ECCS performance to reflood and thereby cool the reactor core following a LOCA depends directly on containment pressure (i.e., the core flooding rate increases with increasing containment pressure). Subsection 6.2.1.1 clarifies that the US-APWR containment does pressurize during a large break LOCA. Therefore, analyses that produce the minimum possible containment backpressure are necessary in order to confirm the conservatism and validity of the ECCS performance evaluation.

A single volume model in GOTHIC is applied to calculate the containment pressure response, incorporating conservative volume parameters and multipliers on the heat transfer coefficients to anticipate uncertainties in the single volume approach. The modeling approach is similar to the containment integrity analysis described in Subsection 6.2.1.1.3.3 with some necessary modifications to conform with the 10 CFR 50, Appendix K requirements and those of Branch Technical Position 6-2 for minimum containment pressure analysis (Ref. 6.2-20).

As discussed in Subsection 6.2.1.1.3.3, a single volume containment model generally gives higher containment pressure than a subdivided model. However, for the US-APWR plant, incorporating in-containment RWSP, a single volume model gives much lower containment pressure by accounting for the heat transfer from containment atmosphere region to the RWSP, which is cooler than the atmosphere. The RWSP ceiling prevents direct heat transfer from the steam in the containment to the pool surface. However, the analysis assuming a single volume model ignores this heat transfer barrier. This maximizes the heat and mass transfer from atmosphere to the pool. Therefore, a single volume GOTHIC model for the heat transfer on the pool surface is used for the US-APWR minimum ECCS backpressure evaluation, in conjunction with acceptable models and input described in Branch Technical Position 6-2 (Ref. 6.2-20).

6.2.1.5.2 Mass and Energy Release Data

Table 6.2.1-28 presents the mass and energy releases including broken-loop accumulator spillage to containment for the DECLG break, as computed by the WCOBRA/TRAC (M1.0) code. The evaluation models which calculate the mass and energy releases to the containment are described in Subsection 15.6.5. A nominal DECLG break analysis is performed for the minimum containment pressure. Since WCOBRA/TRAC has a thermal non-equilibrium scheme, steam and liquid flow from vessel side break are combined and transferred to GOTHIC as a single mixture. The mixing minimizes the containment pressure due to the reduction of the available energy released to the containment vapor space. Then, the conservatively low containment pressure is applied as a boundary condition in the analysis with the WCOBRA/TRAC code.

6.2.1.5.3 Initial Containment Internal Conditions

Initial containment conditions are biased properly for the ECCS evaluation so as to yield a conservatively low containment back pressure. The following initial values are used in the analysis:

Containment pressure (psia)	14.4 (minimum value)
Containment temperature (°F)	70 (minimum value)
RWSP water temperature (°F)	32 (minimum value)
Relative humidity (%)	100 (maximum value)
Service water temperature (°F)	32 (minimum value)
Outside temperature (°F)	-40 (minimum value)

The containment initial conditions of 70°F and 14.4 psia are representative of the low end of values anticipated during normal full-power operation. The initial relative humidity is conservatively assumed to be 100 percent. The initial temperature outside of the containment is assumed to be the lowest design value temperature. The above values are consistent with Branch Technical Position 6-2 (Ref. 6.2-20).

6.2.1.5.4 Containment Volume

The volume used in the analysis is 2.86×10^6 ft^3. The estimated free volume is maximized to ensure conservative prediction of the minimum containment pressure. The volume of the internal structures and equipment is subtracted from the gross containment volume to arrive at the maximized net free volume, considering uncertainty.

6.2.1.5.5 Active Heat Sinks

The US-APWR employs the containment spray system (CSS) to maintain the containment vessel internal peak pressure below the design pressure and reduce it to approximately atmospheric pressure in a postulated LOCA or MSLB. For minimum pressure analysis, the assumption of maximum spray effectiveness is conservative. Maximum effectiveness is achieved by specifying the maximum available spray flow rate beginning at the earliest possible time assuming offsite power to be available independent of the ECCS performance evaluation. A small spray droplet size of 0.004 inch is also specified to insure high efficiency. Additional conservatism is included by setting the incoming spray water temperature to the minimum possible value (32ºF) regarded as identical with the minimum service water temperature. Conditions for the ESFs used in the analysis are summarized in Table 6.2.1-29.

6.2.1.5.6 Steam-Water Mixing

The ECCS spillage flow is modeled with GOTHIC flow boundary conditions. Mass and energy injection rates are calculated by the primary system codes. The spillage flow is conservatively injected as small droplets to ensure equilibrium with the atmosphere

before reaching the RWSP. Water spillage rates from the broken loop accumulator are presented in Table 6.2.1-28.

6.2.1.5.7 Passive Heat Sinks

The passive heat sinks and their thermophysical properties used in the analysis are given in Table 6.2.1-30 and Table 6.2.1-31, respectively. The heat sinks are divided in accordance with Branch Technical Position 6-2 (Ref. 6.2-20), and are modeled as described in Subsection 6.2.1.1.3 for containment integrity analysis with the following exceptions:

1. The conductor mass and surface areas are biased high to cover uncertainties in the actual mass and area.

2. Material properties are biased high (density, conductivity, and heat capacity) as indicated in Branch Technical Position 6-2 (Ref. 6.2-20).

3. For conductors that model painted surfaces or include an air gap, such as the containment liner/concrete structures, the thermal resistance of the paint layer or the air gap is set to zero.

4. The initial temperature for thermal conductors is set to a low value consistent with a low ambient temperature.

5. The outside surface of the containment shell is maintained at -40°F throughout the calculation. The initial through-thickness temperature distribution of the containment shell is consistent with initial atmosphere temperatures of both sides.

6. For the inside surfaces of thermal conductors, the Tagami/Uchida heat transfer coefficient option is selected, as described in the following subsection.

6.2.1.5.8 Heat Transfer to Passive Heat Sinks

The following conservative condensing heat transfer coefficient is incorporated in the GOTHIC code for the exposed passive heat sinks during the blowdown and post-blowdown phases, in conformance with Branch Technical Position 6-2 (Ref. 6.2-20).

The condensation heat transfer coefficient (H_{cond}) as a function of time (t) on the surface of heat sinks during blowdown period is given as

$$H_{cond}(t) = H_{init} + \left\{H_{Tagami}(t_{eob}) - H_{init}\right\}\left(\frac{t}{t_{eob}}\right)$$

where H_{init} is initial heat transfer coefficient (H_{init} = 8 Btu/ft^2-hr-^{o}F), $H_{Tagami}(t_{eob})$ is a peak condensation heat transfer coefficient by Tagami, which appears at the end of blowdown, and t_{eob} is time of the end of blowdown.

$$H_{Tagami}(t_{eob}) = 4 \times 72.5 \times \left(\frac{Q}{V \times t_{eob}} \right)^{0.62}$$

where Q is total released energy during the blowdown period and V is free volume of the containment, respectively, and the factor of 4 is consistent with Branch Technical Position 6-2 (Ref. 6.2-20).

Condensation heat transfer coefficient on the surface of heat sinks after the blowdown period is

$$H_{cond}(t) = 1.2 \times H_{Uchida} + \left\{ H_{Tagami}(t_{end}) - 1.2 \times H_{Uchida} \right\} \exp\left\{ -0.025 \left(t - t_{eob} \right) \right\}$$

where

$$H_{Uchida} = 79.33 \times \left(\frac{\rho_{vs}}{\rho_{vg}} \right)^{0.8}$$

ρ_{vs} is steam density in the containment volume and ρ_{vg} is density of gas, respectively.

Transient heat transfer coefficients on the surface of the heat sinks are shown in Figure 6.2.1-83.

6.2.1.5.9 Other Parameters

Containment purge is assumed to be in operation at time zero and air is vented through containment exhaust lines until the isolation valves fully close, which results in further minimization of the containment pressure. However, the total amount of purged air volume is less than 1,500 ft^3, which is included in the margin of the initial containment free volume. Therefore, containment purge is not directly modeled in the analysis. No other parameters have a substantial effect on the minimum containment pressure analysis.

6.2.1.6 Testing and Inspection

The preoperational testing and inspection and inservice testing and inspection of the containment meet ASME Code Section III requirements for containment vessels. Testing and inspection of the containment require written nondestructive examination procedures as required by ASME Code Article CC 5000 (Ref. 6.2-21). A description of the initial test program for the containment is included in Section 14.2 that applies to construction, preoperational and startup testing. Subsection 3.8.1.7 includes construction inspection acceptance criteria. Requirements for the containment structural integrity test, containment local leak rate, and containment integrated leak rate preoperational tests are included in Subsections 14.2.12.1.61 through 14.2.12.1.63. Preoperational testing includes quality control testing of the concrete and concrete constituents in accordance with the frequencies established by Table CC-5200-1 and examination of the reinforcing

systems, prestressing systems, and welds in accordance with ASME Code. Structural integrity testing is required to demonstrate the quality of construction and to verify the acceptable performance of new design features. Leakage testing of the RWSP liner (cladding) is performed in accordance with ASME Code requirements. Inspection criteria are delineated in ASME Code Article CC-5000. Failed inspection areas are repaired in accordance with ASME Code. The containment is pressure tested at a pressure of at least 1.15 times the containment design pressure prior to acceptance in accordance with the requirements of ASME Code Section III, Article CC-6000 (Ref. 6.2-22). Preoperational testing is described in detail in Chapter 3, Subsection 3.8.1.7.

The US-APWR containment is designed to permit appropriate periodic inspection of all important areas. Important areas are penetrations, the liner intersection with the base concrete inside containment, locations where the floors or platforms are adjacent to the liner and the vicinity of the crane brackets.

Inservice testing and inspection requirements are described in Subsection 3.8.1.7. Subsection 6.2.4.4 provides a description of the testing and inspection of the containment isolation system. The requirements and methods used for containment leakage testing is presented in Subsection 6.2.6. The containment isolation system testing and the containment leakage testing are performed to ensure the postulated leakage from a design basis accident will be within the assumptions provided in Chapter 15, “Transient and Accident Analyses.”

6.2.1.7 Instrumentation Requirements

Instruments are installed to monitor conditions inside the containment and actuate the appropriate safety functions when an abnormal condition is sensed. Instruments monitor containment pressure, temperature, hydrogen concentration and radioactivity, and air effluent for containment depressurization.

Four narrow-range pressure detectors monitor the containment pressure over a pressure range of -7 to 80 psig. The pressure detectors are powered from independent Class-1E sources, are widely separated around the containment, and connect to their associated transmitters (outside the containment) through oil-filled instrument lines. The containment pressure activates logic to initiate a variety of ESF functions, which are discussed in the following sections. Containment pressure is indicated and alarmed in the main control room (MCR).

Two temperature sensors are installed to monitor the containment air temperature between 40 and 400°F. The containment temperature is indicated and alarmed in the MCR, as well as stored in the process computer.

Two wide range level instruments monitor the water level during normal operation and two narrow range level instruments monitor the water level during accident conditions.

One temperature sensor is installed to monitor the RWSP water temperature. The RWSP temperature is indicated and alarmed in the MCR, as well as stored in the process computer.

Four area radiation monitors are positioned inside the containment. The containment area radiation monitors detect airborne particulate radioactivity in the containment circulating air. High radiation in the containment isolates the containment ventilation and alarms in the MCR.

Section 7.3 describes the instrumentation and controls, including the power supplies, the actuation logic, and the resulting system/component initiation signals, used for the automatic ESF actions.

6.2.2 Containment Heat Removal Systems

The containment heat removal system is a dual-function ESF system; containment spray for fission product removal as described in Subsection 6.5.2, and containment spray for containment cooling as discussed here. The CSS and the residual heat removal system (RHRS) share major components which are containment spray/residual heat removal (CS/RHR) pumps and heat exchangers. The RHR for shutdown cooling is described in Chapter 5, Subsection 5.4.7.

There are four 50% capacity trains of containment spray, using four dual-purpose CS/RHR RWSP suction lines, four dual-purpose CS/RHR spray pumps, four dual-purpose CS/RHR heat exchangers, and a spray ring header composed of four concentric interconnected rings. To ensure a reliable containment spray pattern coverage, each spray ring is located at a different containment elevation, and spray rings are supplied from the four 50% capacity trains of containment spray.

6.2.2.1 Design Bases

The containment spray system (CSS) is designed to perform the following major functions:

- Containment heat removal
- Fission product removal

These functions are provided by safety-related equipment with redundancy to deal with single failure, environmental qualification, and protection from external hazards.

6.2.2.1.1 Containment Heat Removal

In the unlikely event of a design basis LOCA or secondary system piping failure, the CSS is designed to limit and control the containment pressure, such that:

- The peak containment accident pressure is well below the containment design pressure
- The containment pressure is reduced to less than 50% of the peak calculated pressure for the design basis LOCA within 24 hours after the postulated accident.

The energy releases into the containment for a design basis LOCA and a secondary system piping failure are described in Subsections 6.2.1.3 and 6.2.1.4, respectively.

As described in Subsection 6.2.1.1.1, the ability of the containment heat removal system is evaluated assuming the worst single failure (with removes one train from service) concurrent with an outage that removes a second train from service. For primary system piping breaks, loss-of offsite power (LOOP) is assumed. For secondary system piping breaks, the cases where LOOP is not assumed are also considered, since the LOOP can possibly reduce releases to the containment.

6.2.2.1.2 Fission Product Removal

The function of containment spray for fission product removal is described in Subsection 6.5.2.

6.2.2.1.3 Compliance with Regulatory Requirements

The CSS design complies with applicable regulatory requirements, including the following:

1. GDC 2, “Design bases for protection against natural phenomena”
2. GDC 4, “Environmental and dynamic effects design bases”
3. GDC 5, “Sharing of structures, systems, and components”
4. GDC 17, “Electric power systems”
5. GDC 38, “Containment heat removal”
6. GDC 39, “Inspection of containment heat removal system”
7. GDC 40, “Testing of containment heat removal system”

The compliance with these GDC is discussed in Chapter 3, Section 3.1.

6.2.2.1.4 Reliability Design Bases

The reliability of the CSS has been considered in establishing the system’s functional requirements, selecting the particular components and their location, and designing the connected piping. Redundant components are provided where the loss of one component would impair reliability. Redundant sources of the containment spray (P signal) are available so that the proper and timely operation of the CSS is ensured. Sufficient instrumentation is available so that failure of an instrument does not impair the readiness of the system. The active components of the CSS are normally powered from separate buses which are energized from offsite power supplies. In addition, redundant emergency onsite power is available through the use of the emergency power sources to ensure adequate power for all CSS requirements. Each emergency power source is capable of driving all pumps, valves, and instruments associated with one train of the CSS. The CSS receives normal power and is backed up with onsite Class 1E emergency electric power sources, as noted in DCD Chapter 8.

The CSS is located in the Reactor Building and the Containment. Both structures are seismic category I and provide tornado and hurricane missile barriers to protect the CSS. The CSS includes four 50% capacity CS/RHR pump trains and assumes one is out of service for maintenance and one becomes inoperative due to a single failure upon the initiation of the CSS. The CSS is designed with sufficient redundancy to ensure reliable performance, including the failure of any component coincident with occurrence of a design basis event, as discussed in DCD Chapters 3, 7, and 15. DCD_02-03 S01

Subsection 6.2.1 discusses the containment environmental conditions during accident conditions, and Chapter 3, Section 3.11 discusses the suitability of equipment for design environmental conditions. All valves required to be actuated during CSS operation are located to prevent vulnerability to flooding.

Protection of the CSS from missiles is discussed in Section 3.5. Protection of the CSS against dynamic effects associated with rupture of piping is described in Section 3.6. Protection from flooding is discussed in Section 3.4.

MUAP-08013-P (Ref. 6.2-36) contains requirements for design and evaluation of ECCS and CSS ex-vessel downstream components to ensure the ECCS and CSS systems and their components will operate as designed under post-LOCA conditions. DCD_06.02.02-84

The CSS is designed for periodic inservice testing and inspection of components in accordance with ASME Code Section XI.

6.2.2.2 System Design

Figure 6.2.2-1 is the flow diagram of the CSS, showing the major components, instruments, and the appropriate system interconnections. Table 6.2.2-1 presents design and performance data for CSS components. The performance data for CS/RHR pump and CS/RHR heat exchanger is shown in Chapter 5, Subsection 5.4.7.

The CSS receives electrical power for its operation and control from onsite emergency power sources and offsite sources, as shown in Chapter 8. In the unlikely event of a LOCA or secondary system line break that significantly increases the containment pressure, the containment spray automatically initiates to limit peak containment pressure to well below the containment design pressure. In addition to preserving containment structural integrity, containment spray limits the potential post-accident radioactive leakage by reducing the pressure differential between the containment atmosphere and the environment and also ensures atmosphere mixing in containment. DCD_06.02.05-44

The CS/RHR system can be manually initiated and operated from the MCR and the remote shutdown console (RSC). In addition to the typical system status and operating information (e.g., valve position indication, pump run status), the containment temperature and pressure are indicated and recorded in the MCR and RSC.

Dual-use components are the CS/RHR heat exchangers and CS/RHR pumps. Motor-operated valves permit CSS or RHRS recirculation of the reactor core. The four CSS containment isolation valves are normally closed, but open automatically on a P signal. The CSS containment isolation valves are interlocked and are allowed to open only if either of the corresponding two in-series RHR hot leg suction isolation valve is

closed. Further, the RHR hot leg suction valves are interlocked so that they cannot be opened unless the corresponding CSS containment isolation valves are closed. This arrangement prevents the reactor vessel water inventory from being sprayed into the containment.

Following a DBA, the containment pressure approaches atmospheric pressure. When the containment pressure is reduced sufficiently and the operator determines that containment spray is no longer required, the operator terminates containment spray. The operator closes the containment spray header isolation valves and aligns system flow through the CS/RHR heat exchanger back to the RWSP through the full flow test line. The pit water is then recirculated and cooled.

Potential voids, caused by insufficient venting, may be formed in the CS/RHR lines. The horizontal sections of the CS/RHR piping are designed to have a continuous downward slope on the pump suction side and a continuous upward slope on the pump discharge side up to the full-flow test line. Vent valves are included at all local high points on horizontal sections and inverted-U piping sections and are designed to be accessible and identifiable. Inservice testing required by Subsection 3.9.6.2 includes periodic testing through the full-flow test lines located at the high point of the RHR piping to the RCS cold legs (see Figure 6.2.2-10), which discharge to the RWSP. These tests periodically discharge potential voids, minimize unacceptable dynamic effects such as water hammer, and ensure operability of the suction and discharge lines. The vent and pipe slope design also facilitate system venting following maintenance procedures which are part of the operating procedures described in Subsection 13.5.2. Subsection 5.4.7.2.1 discusses gas accumulation for the RHR system, portions of which are shared with the containment spray system. No additional surveillance requirements are necessary for locations of the containment spray system which are not shared by the RHR system. DCD_05.04.07-11 DCD_05.04.07-11

CS/RHR components are procured by qualified vendors, approved to supply under components and materials. Chapter 14, Section 14.2 “Initial Plant Test Program,” discusses component and integrated system tests performed prior to un-conditional plant operations.

6.2.2.2.1 CS/RHR Pumps

These components are included in the RHRS. Four dual-purpose CS/RHR pumps are provided, one for each of four 50% capacity trains. They are motor-driven centrifugal pumps with mechanical seals. The pumps are sized to deliver 3,000 gpm at a discharge head of 410 ft. The 100% capacity design flow rate (two of four 50% capacity CS/RHR pumps) is based on 15.2 gpm flow per nozzle and 348 nozzles. With a minimum flow rate for each pump of 355 gpm, the required two-pump 100% flow rate is, thus, 6,000 gpm. The CS/RHR pump discharge head is based on a static head of 215 ft. and pressure losses equivalent to 165 ft. Including a margin of 30 ft. The design head of the CS/RHR pumps is 410 ft.

All four CS/RHR pumps automatically start and the containment isolation valves automatically open on the receipt of a P signal, delivering a flow from four CSS trains to the CSS spray rings. Initiating signals, setpoints, logic, and control are described in Chapter 7, “Instrumentation and Controls” Chapter 8, “Electric Power,” discusses electrical power supplies and the available sources for the CSS.

6.2.2.2.2 CS/RHR Heat Exchangers

These components are included in the RHRS. Four CS/RHR heat exchangers are provided. They are horizontal tube and shell heat exchangers. The CS/RHR system water flows through the tubes, and the component cooling water flows through the shell.

6.2.2.2.3 Containment Spray Piping

Each of the RWSP suction valves is normally open to ensure that suction piping remains full and aligned to provide a ready flow path to the CS/RHR pumps. Each CSS train's discharge line to the containment spray rings is provided with a normally closed, motor-operated containment isolation gate valve.

The system piping is normally filled and vented to the containment isolation valves (CSS-MOV-004A, B, C, and D) at elevation 36.75 ft. (typical for all four 50% containment spray trains) prior to plant startup. The minimum piping "keep full" level corresponds to the RWSP 100% water level at elevation ~~19.5 ft.~~20 ft. - 2 in. A conservative value of 100 seconds time delay is assumed between the system initiation and the spray ring flow for purposes of LOCA and the containment response analyses. The delay time associated with accidents is provided in Subsection 6.2.1.1.3.4 and Table 6.2.1-5. MIC-03-06-00070

6.2.2.2.4 Containment Spray Nozzles

The containment spray nozzles are of the type and manufacture commonly used in United States commercial nuclear applications. The nozzles are fabricated from 304 stainless steel, and each is fitted with a 0.375 in. orifice. As shown in Figure 6.2.2-2, the one-piece construction provides a large, unobstructed flow passage that resists clogging by particles, while producing a hollow cone spray pattern. Figure 6.2.2-3 shows each nozzle's orientation on a spray ring. The nozzle orientation is identified as vertical down (No. 1 nozzle, R-5605); 45° from vertical down (No. 3 nozzle, R-5604); and horizontal (No. 2, and No. 4 nozzles, R-5603). Figure 6.2.2-4 presents the spray pattern and typical spray coverage of each nozzle type.

Figure 6.2.2-5 is a sectional view of containment showing the elevation of the spray rings (A, B, C, and D) and the typical spray pattern from the nozzle to the containment operating floor level (elevation 76 ft. - 5 in). Figure 6.2.2-6 presents a plan view showing the location of each nozzle on each spray ring and the predicted spray coverage on the operating floor of the containment. Figure 6.2.2-6 also tabulates the number and orientation of the nozzles on each spray ring. Of the 348 containment spray nozzles distributed among the four containment spray rings, there are only four vertical up No. 4 nozzles (R-5603)—one on each spray ring. In addition to their spray function, these nozzles also serve as the high point vent on each spray ring.

6.2.2.2.5 Refueling Water Storage Pit

The RWSP is the protected, reliable, and safety-related source of boric acid water for the containment spray and SI. (Section 6.3 describes the SI function for the US-APWR ECCS.) The RWSP also is used to fill the refueling cavity in support of refueling operations. The RWSP is located on the lowest floor inside the containment, with a ~~minimum 81,230~~84,750 ft^3 ~~capability~~capacity available, it is designed with sufficient MIC-03-06-00070

capacity to meet long-term post-LOCA coolant needs, including holdup volume losses. Potential holdup areas within the containment are depicted in Figure 6.2.1-9. ~~The transfer piping and refueling cavity drain piping serves to the replenishment functions necessary for the ECCS to perform its safety function.~~The overflow piping provides the replenishment functions necessary for the ECCS to perform its safety function. The total water volume held up in the containment is shown in Figure 6.2.2-7. Figure 6.2.2-7 shows the RWSP capacity requirements for refueling and LOCA. The RWSP is configured as a rough horseshoe-shaped box around the containment perimeter. The open end of the RWSP is oriented at the containment 0° azimuth (plant north), where the reactor coolant drain tank, reactor coolant drain pumps, and the containment sump are located. Figure 6.2.1-16 and Figure 6.2.1-17 present plan and sectional views of the RWSP. Subsection 6.2.1 describes the RWSP and its containment-related features and functions as part of the containment structure. MIC-03-06-00070

As discussed in Chapter 3, the RWSP is designed as Equipment Class 2, seismic category I, with a maximum operating temperature of ~~250~~270°F. Pressure in the RWSP air space is relieved to the containment atmosphere, but the RWSP is designed to withstand a containment pressure of 9.6 psi. (9.6 psi is the differential pressure between containment atmosphere and the RWSP air space during a LOCA.) The inside walls and floor of the RWSP in which contact with 4,000 ppm boric acid solution are lined with stainless steel clad steel plate. The RWSP ceiling (underside of floor at containment elevation 25 ft. - 3 in.) is not normally in contact with the RWSP boric acid water, but is clad with stainless steel plate. MIC-03-06-00001

The coolant and associated debris from a pipe or component rupture (LOCA), and the containment spray drain into the RWSP through 12-in diameter overflow pipes, as shown in Figure 6.2.1-12, which provide return flow from the reactor cavity and header compartment. The reactor cavity and header compartment overflow pipes are offset from the SG compartment floor openings and refueling cavity drain piping. There are two sets of four overflow pipes from the header compartment to the RWSP, and one set of four overflow pipes from the reactor cavity to the RWSP. To minimize containment humidity (due to evaporation from the RWSP), the discharge of the overflow piping extends below the normal 100% RWSP water level. Each overflow pipe discharges into a return flow water baffle. The reactor cavity and header compartment receive containment drainage through floor openings in the SG compartments, as discussed in Subsection 6.2.1.1.2. Mesh debris interceptors are installed above the floor openings and within the header compartment as shown in Figure 6.2.1-14. The debris interceptors are designed with an 8-in x 8-in mesh, which is smaller than the overflow pipe diameter to prevent clogging of the overflow piping. The debris interceptors are necessary for ECCS operation, and are therefore classified as safety-related and seismic category I components. The header compartment also receives return flow from the refueling cavity, which is protected from large debris by grating in the upper core internal laydown pit (as discussed in DCD Section 6.2.2.3.11). The design basis of postulated debris is defined as “fines” and all of this debris is assumed to enter the RWSP in the safety evaluation of the sump performance (Reference 6.2-34).~~transfer pipes, as shown in Figure 6.2.1-12. The pipes are installed through the RWSP ceiling, ending as openings into the containment floor at elevation 25 ft. - 3 in. Each transfer pipe opening into the containment is protected from large debris by vertical debris interceptor bars that are capped by a ceiling plate. There are ten transfer pipes distributed around the containment at elevation 25 ft. - 3 in, as~~ MIC-03-06-00070

~~shown in figure 6.2.1-16. The debris interceptor consists of 6 round vertical rods and 1 top plate is provided at the transfer piping which collect and return recirculation water to the RWSP. The vertical rods are installed at an interval smaller than the inner diameter of transfer piping. This is to prevent transfer pipe from blockage by debris larger than the inner diameter of the pipe. Since the design basis of postulated debris is defined as "small" and all of debris is considered reachable to the RWSP in the safety evaluation of the sump performance (Reference 6.2-34). The debris interceptor is not credited to contribute ECC operation, and therefore it is classified as non-safety related, seismic category II component. To minimize containment humidity (due to evaporation from the RWSP), the transfer pipes extend from the containment floor, through the RWSP ceiling to below the normal 100% RWSP water level.~~ MIC-03-06-00002

The RWSP vents are installed through the RWSP ceiling and discharge into the containment atmosphere above. The vents act to equalize the RWSP and the containment free volume air pressure, when the SI pumps or CS/RHR pumps take suction and draw down the RWSP water level. The vents consist of five pairs of vents to mix the RWSP air with the containment free volume air during post-LOCA. Each pair of vent pipes terminates below the normal RWSP water level to minimize the release of vaporized RWSP water into the containment atmosphere during normal plant operation.

As shown in Figures 6.2.2-8 and 6.2.2-9, each quadrant of the RWSP contains paired suction piping and the suction pit arrangements for the CS/RHR pumps and SI pumps. The open end of each suction pipe is equipped with a debris strainer (emergency core cooling/containment spray (ECC/CS) strainer) that satisfies the Safety Evaluation (SE) of NEI 04-07, "PWR Sump Performance Evaluation Methodology" and conforms ~~to~~with the guidance in RG 1.82 (Ref. 6.2-23). MIC-03-06-00003

Table 6.2.2-2 presents a comparison of the RWSP recirculation intake debris strainer (ECC/CS strainer) design to the guidance of RG 1.82 (Ref. 6.2-23).

The RWSP also is equipped with two spargers (diffusers), which are large stainless steel right circular cylinders that are capped and drilled; each sparger is located near the bottom of the RWSP at containment 90° (plant east) and 270° (plant west) azimuth. The spargers receive, and diffuse into the RWSP water, high-energy (but low volume and flow) water from emergency letdown lines and CS/RHR pump suction relief valves. The emergency letdown lines (described in Subsection 6.3.2) are directed to separate RWSP spargers. The RWSP is equipped with an overflow pipe to accommodate a level change from such discharges, as shown in Figure 6.2.1-15.

6.2.2.2.6 ECC/CS Strainers

~~These components are included in the ECCS. Figures 6.2.2-8 and 6.2.2-9 show four independent sets of ECC/CS strainers located in the RWSP. The strainer design includes redundancy, a large surface area to account for potential debris blockage and maintain safety performance, corrosion resistance, and a strainer hole size to minimize downstream effects. Additional design attributes are described in the US-APWR Sump Strainer Performance document (Ref 6.2-34).~~These components are included in the ECCS. Figures 6.2.2-8 and 6.2.2-9 show four separate, independent, and redundant 50% capacity sets of ECC/CS strainers located in the RWSP. Only two of the four safety trains are conservatively assumed for evaluating pump performance during an accident. A MIC-03-06-00004

passive disk layer type of strainer system with minimum 2,754 ft^2 of surface area per sump (or 5,508 ft^2 for two strainer trains) is applied. Fabrication tolerances shall be specified during strainer procurement to provide the per-sump minimum surface area of 2754 ft^2 for the as-built strainers. The strainer is principally constructed of perforated plate with a square flange at the bottom for attachment to the supporting plate, which covers the sump pit. The strainers and supporting plates are constructed of corrosion-resistant stainless steel. The nominal diameter of holes is designed to be equal to or less than 0.066", consistent with the narrowest gap in the systems downstream of the strainer. MIC-03-06-00070 MIC-03-06-00004 MIC-03-06-00004

The strainer design (Figures 6.2.2-8 and 6.2.2-9) is composed of modular components, and is consistent with Regulatory Guide (RG) 1.82 (Ref. 6.2-23) guidance as follows (also, see Table 6.2.2-2, "Comparison of RWSP Recirculation Intake Debris Strainer Design to RG 1.82 Requirements"):

- Four independent sets of strainer systems are provided inside the in-containment refueling water storage pit (RWSP) and are designed to be fully submerged during all postulated events requiring the actuation of the ECCS with a minimum RWSP water level of 1-ft above the top of the strainer,
- The ECC/CS strainers limit debris from entering the safety systems that are required to maintain the post-LOCA long term cooling,
- The design precludes the water that drains into the RWSP from impinging directly on the strainers,
- The strainers are well isolated from postulated pipe break jets and missiles,
- The strainers' large surface area provides low flow rate on the strainer surface, thus minimizing head loss from debris accumulation,
- The perforated plates are designed to prevent flow blockage and to assure core cooling,
- The strainers are constructed of corrosion resistant materials,
- The strainers are sized to maintain the performance of the safety-related pumps,
- The strainers are designed to meet seismic category I requirements, and
- When operational, the strainers are to be periodically inspected during plant shutdowns.

As described in Chapter 3, the ECC/CS strainers are Equipment Class 2, seismic category I. Principal design features of the strainers are provided in Table 6.3-5. Additional design attributes are described in the US-APWR Sump Strainer Performance document (Ref 6.2-34), Subsection 6.2.2.3 "Design Evaluation," Table 6.3-5 "Safety Injection System Design Parameters," and in the associated referenced documents listed in Section 6.2.9 that include References 6.2-36, and 6.2-38. MIC-03-06-00004

6.2.2.2.7 Major Valves

Containment isolation is discussed in Subsection 6.2.4. Control (including interlocks) and automatic features of containment isolation valves are discussed in DCD Chapter 7, Section 7.3.

6.2.2.2.7.1 CS/RHR Pump RWSP Suction Isolation Valve

There is a normally open motor-operated gate valve in each of the four CS/RHR pump suction lines from the RWSP. These valves would remain open during normal and emergency operations. The valves are remotely closed by operator action from the MCR and RSC only if a CSS had to be isolated from the RWSP to terminate a leak or during RHR cooldown operation where the isolation from the RWSP is required. In the pump/valve maintenance, these valves are also closed. The open or closed valve position, for these valves, is indicated in the MCR and RSC. The four CS/RHR pump RWSP suction isolation valves (CSS-MOV-001A, B, C, and D) are Equipment Class 2, seismic category I.

These valves are interlocked and are allowed to open only if the two in-series RHR hot leg suction isolation valves are closed.

6.2.2.2.7.2 Containment Spray Header Containment Isolation Valve

There is a normally closed motor-operated gate valve in each CS/RHR heat exchanger outlet line. These valves are open automatically on receipt of a containment spray signal. The valves can be closed remotely by operator action from the MCR and RSC if containment isolation is required or during RHR cooldown operation where the isolation from the containment spray header is required. The open or closed valve position, for these valves, is indicated in the MCR and RSC. The four containment spray header containment isolation valves (CSS-MOV-004A, B, C, and D) are Equipment Class 2, seismic category I.

These valves are interlocked and are allowed to open only if two in-series RHR hot leg suction isolation valves are closed. In addition, the electrical power for these valves are removed to prevent an inadvertent opening and actuation of containment spray during RHR cooldown operation.

6.2.2.2.7.3 Containment Spray Header Containment Isolation Check Valve

One swing check valve is aligned in each CS/RHR heat exchanger outlet line as containment isolation valve. The containment spray header containment isolation check valve (CSS-VLV-005A, B, C, and D) are Equipment Class 2, seismic category I.

6.2.2.3 Design Evaluation

Because smaller spray droplets fall more slowly and reach equilibrium with vapor more quickly than larger droplets, the US-APWR uses a Sauter mean diameter of 1,000 microns as the assumed droplet size for analysis purposes.

This value is obtained by the following formula:

$\sum (n \times d^3) / \sum (n \times d^2)$ μm

The value of the n and d variables are empirical data obtained using the spray nozzle design shown in Figure 6.2.2-2, where:

n = number of droplets in specified diameter range

d = diameter of droplet

While a given mass of drops at the Sauter mean diameter has the same surface to mass ratio as the actual drop spectrum, the consistency of the surface to mass ratio ensures that the heat transfer rate to heat capacity ratio is correctly approximated. Thus, the Sauter mean diameter of 1,000 microns is conservative and possesses a consistent surface to mass ratio for use in the GOTHIC (Ref. 6.2-1, 6.2-2, 6.2-3) computer analysis code.

Containment spray patterns, containment spray elevation and plane drawings are provided in Figures 6.2.2-5, 6.2.2-6. These drawings demonstrate adequate coverage and overlap.

DCD_06.02.02-55

Table 6.2.2-3 is a failure modes and effects analysis of the CSS and demonstrates sufficient reliability.

The containment design heat removal evaluations documented in Subsection 6.2.1.1 includes the effects of the CSS operation (including single failure considerations). Table 6.2.1-5 provides ESF system parameters relating to event sequences such as ECCS and CSS actuation timing. Table 6.2.1-5 also provides both full capacity and partial capacity (used for containment design evaluation) system operation parameters. These evaluations conclude that the acceptance criteria are met, and the CSS design is acceptable. Subsection 6.2.1.1 includes information about the energy content of the containment atmosphere and the recirculation water during the transients that are evaluated.

Information on the integrated energy content of the containment atmosphere and RWSP water as functions of time following the postulated design basis LOCA and the integrated energy absorbed by the structural heat sinks and CS/RHR heat exchangers is provided in the following Tables and Figures:

- Table 6.2.1-12, Distribution of Energy at Selected Locations within Containment for Worst-Case Postulated DEPSG Break
- Table 6.2.1-14, Distribution of Energy at Selected Locations within Containment for Worst-Case Postulated DEHLG Break
- Figure 6.2.1-84, Containment Energy Distribution Transient for DEPSG Break (C_D=1.0)
- Figure 6.2.1-85, Containment Energy Distribution Transient for DEHLG Break (C_D=1.0)

~~The Sump Strainer Performance Evaluation document (Ref. 6.2-34) evaluates parameters described in NEI 04-07 (Ref. 6.2-24). Additional detailed evaluation of these parameters is provided in reference 6.2-34 and are summarized below:~~ MIC-03-06-00005

- ~~Identification of insulation types and coating systems used and restricted in the US-APWR and associated potential for debris generation and differential pressure across the strainer~~
- ~~Break selection criteria and bounding break locations~~
- ~~Debis generation, characterization and transport assumptions associated with affected insulation, coatings, and latent debris~~
- ~~Total strainer head loss associated with fibrous and particulate debris, "chemical effect"~~
- ~~Net Positive Suction Head associated with total strainer head loss, hydraulic head loss of the equipment and piping, including uncertainty margins~~
- ~~Upstream effects including hold-up volumes conservative drainage flow path and capacity assumptions~~
- ~~Downstream effects potentially impacting the safety functions associated with pumps, valves, heat exchangers, instrumentation (sensing lines and flow-measuring devices), spray nozzles, reactor vessel flow paths. Evaluation of downstream effects is described in the report "Sump Strainer Downstream Effects" (Ref: 6.2-36). As for instrumentation, all connections, by design are either at the horizontal or above.~~

The Sump Strainer Performance (Ref. 6.2-34) and Downstream Evaluation (Ref. 6.2-36) reports address Generic Safety Issue (GSI) 191. The key information essential to address GSI-191 is summarized in the following subsections. DCD_06.02.02-55

6.2.2.3.1 Break Selection

The US-APWR design considers potential pipe breaks in the primary coolant system piping, loss of coolant accident (LBLOCA), and relies on the ECCS sump recirculation for its mitigation. Also, the reactor coolant system (RCS) piping small break LOCAs (SBLOCAs) require ECC/CS sump recirculation. In addition, the secondary side system pipe breaks (i.e., Main Steam and Feed Water (MS/FW)) require sump operation.

The break sizes of the primary and secondary pipe breaks considered are double ended guillotine breaks (DEGB). The basis for this break size selection is to provide the largest volume of debris from insulation and other materials that may be within the region affected by the postulated break. For the break selection, the following break location criteria, which are recommended in the SE of NEI 04-07 and comply with RG 1.82, are considered:

1. Pipe break in the RCS or MS/FW with the largest potential for debris;

2. Large breaks with two or more different types of debris;

3. Breaks with the most direct path to the sump;

4. Large breaks with the largest potential particulate debris to insulation ratio by weight, and;

5. Breaks that generate a "thin-bed," high particulate with 1/8-inch thick bed.

DCD_06.02.02-55

Ref. 6.2-34 applies the criteria above and concludes that the MCP break, 31-inch ID, is the limiting break location in terms of debris generation, transport and head loss for the strainer.

6.2.2.3.2 Debris Source Term

DCD_06.02.02-44

The debris source term of the US-APWR that challenges sump performance consists of non-chemical debris (insulation, coatings, latent fiber, sludge, miscellaneous debris such as stickers, tape, etc.) and chemical debris (including aluminum) in the containment. The chemical debris that would precipitate during long-term core cooling is determined by the US-APWR chemical effects tests (Ref. 6.2-38). Also, refer to Section 6.1.1.2.3, "Compatibility of Construction Materials with Core Cooling Coolants and Containment Spray," which denotes that the use of aluminum within containment is limited to minimize the generation of chemical debris during an accident.

DCD_06.02.02-44

The principal insulation used in the containment is reflective metal insulation (RMI). RMI is used for the reactor vessel, steam generators, pressurizer, primary and secondary main and branch lines, and other equipment and piping that require insulation in areas that are potentially subject to jet impingement from high-energy line breaks (HELB). The use of fibrous insulation is eliminated from the ZOI. Pre-formed, buoyant-type insulation is used as anti-sweat insulation chiller piping. The buoyant insulation is not considered to challenge strainer performance for plants with fully submerged strainers per the SE of NEI 04-07 since this debris would not transport to the strainer, and therefore it is excluded from debris source.

Insulation is a purchased product and its use is controlled to meet the parameters provided in the US-APWR Sump Strainer Performance document (Ref: 6.2-34).

DCD_06.02.02-55

Methods used to attach insulation to piping and components in containment are as follows:

- Reflective Metal Insulation (RMI) consists of pre-fabricated units (metal jackets) engineered as integrated assemblies to fit the surface that is being insulated. The RMI insulation is supported by the insulated surface or by existing lugs or brackets. Welding is not allowed to attach insulation to the insulated surface. The metal jackets are provided with quick-release latches, closure handles and positive-lock type latches as required.

- Anti-sweat Insulation forms a system comprised of pre-fabricated units (modules or panels) engineered as integrated assemblies to fit the insulated surface. This insulation is held in place with sealant or equivalent.

As discussed in Subsection 6.1.2, DBA-qualified epoxy coatings are applied in the containment in accordance with RG 1.54 (Ref. 6.2-41). DCD_06.02.02-55

~~The available and required NPSH at the inlet of the CS/RHR and SI pumps are provided in Table 6.2.2-1. Thus, adequate NPSH is provided to the CS/RHR and SI pumps, including margin.~~ MIC-03-06-00005

~~Table 6.2.2-1 presents values used in the calculations described above.~~

Programmatic controls will be established to ensure that potential sources of debris introduced into containment (e.g., insulation, coatings, foreign material, aluminum), and plant modifications, will not adversely impact the ECC/CS recirculation function. DCD_06.02.02-63

~~Programmatic control~~These programmatic controls will be established consistent with guidance provided in RG 1.82, Rev. 3 (Ref. 6.2-23), in order to ensure that potential quantities of post-accident debris are maintained within the bounds of the analyses and design bases that support Emergency Core Cooling (ECC) and Containment Spray (CS) recirculation functions and to ensure that the long term core cooling requirements of 10 CFR 50.46 are met. MIC-03-06-00006

~~The following is a summary of the programmatic controls that will be implemented to ensure that activities are conducted in a manner that ensures ECC/CS strainer operation, and limits the quantity of latent (unintended dirt, dust, paint chips, and fibers) and miscellaneous (tape, tags, stickers) debris inside containment:~~Table 6.2.2-2 presents a comparison of the RWSP sump strainer design to the guidance of RG 1.82. Also, refer to Subsection 6.2.2.3.12 and 6.2.2.3.13, “Downstream Effects – In-Vessel/Ex-Vessel.” MIC-03-06-00006

The following is a summary of the programmatic controls that will be implemented to ensure that activities are conducted in a manner that ensures ECC/CS strainer operation, and limits the quantity of latent (unintended dirt, dust, paint chips, and fibers) and miscellaneous (tape, tags, stickers) debris inside containment:

- Preparation of a cleanliness, housekeeping and foreign materials exclusion program. This program addresses latent and miscellaneous debris inside containment (Ref. 6.2-40). An acceptance criterion below the conservative assumption of 200 lb for latent debris (unintended dirt, dust, paint chips, and fibers which principally consist of fiber and particulate debris) inside containment will be established consistent with MUAP-08001-P Sump Strainer Performance Evaluation (Ref.6.2-34).~~inside containment will be established consistent with MUAP-08001-P, Sump Strainer Performance Evaluation (Ref.6.2-34).~~ The program will also ensure that the quantity of miscellaneous debris in containment will be limited such that the allocated 200 ft^2 strainer surface area per sump ~~uncertainty~~margin per MUAP-08001-P, will be met to ensure ECC/CS strainer operation. A cleanliness, housekeeping and foreign materials exclusion program will be established by the COL Applicant. MIC-03-06-00006

- Procedures will be implemented to ensure administrative controls ~~and regulatory/quality requirements for plant modifications and temporary changes that include consideration of materials introduced into the containment that could contribute to sump strainer blockage.~~are established for regulatory and quality requirements, for plant modifications and temporary changes, which include consideration of MIC-03-06-00006

debris source term (i.e., RMI insulation, fiber insulation, inventory of: aluminum, latent debris and miscellaneous debris) introduced into the containment that could contribute to sump strainer blockage. The procedure will ensure that the quantity of RMI and fiber insulation within the ZOIs will be consistent with the design basis debris described in the Table 6.2.2-4, and will ensure that the aluminum in containment exposed to containment spray water is limited to equal or less than 810ft^2. Included will be requirements for controlling temporary modifications to systems, structures and components (SSCs) in a manner which ensures compliance with 10 CFR 50.46. Future plant modifications will be evaluated in accordance with the requirements of 10 CFR 50.59 and 10 CFR 52.63. MIC-03-06-00006

- Maintenance activities, including associated temporary changes, will be subject to the provisions of 10 CFR 50.65(a)(4), which requires a licensee to assess and manage the increase in risk that may result from the proposed maintenance activities, prior to performing the activities. These activities may be shown to be acceptable with respect to the ECC/CS strainers by any of the following means:

  1. performing the maintenance activities when the ECC/CS strainers are not required to be operable and restoring conditions consistent with the design bases prior to re-establishing operability; MIC-03-06-00006

  2. conducting a deterministic evaluation that concludes the specific activities do not create a condition that adversely affects strainer performance; MIC-03-06-00006

  3. ~~control of~~controlling the maintenance activities within the bounds established by approved programs that assure no adverse impact (e.g., activities do not result in exceeding limits established for temporary use of material inside containment), and; MIC-03-06-00006 MIC-03-06-00006

  4. performing a risk assessment for a specific activity.

  Combined License Applicant Item COL 17.6(1) addresses development and implementation of the maintenance rule program in accordance with 10 CFR 50.65.

- A containment coating monitoring program will be implemented in accordance with the requirements of Regulatory Guide 1.54, Revision 2 (Ref. 6.2-41). The coatings program is described in Subsections 6.1.2 and 6.2.2.3.9. The chemical effects program is covered in Subsection 6.2.2.3.10 (Ref. 6.2-38). MIC-03-06-00006

- ~~Containment coating monitoring program will be implemented in accordance with the requirements of Regulatory Guide 1.54, Revision 1. Coatings program is described in Subsection 6.1.2.~~

~~Table 6.2.2-3 is a failure modes and effects analysis of the CSS and demonstrates sufficient reliability.~~

~~The containment design heat removal evaluations documented in Subsection 6.2.1.1 includes the effects of the CSS operation (including single failure considerations). Table 6.2.1-5 provides ESF system parameters relating to event sequence such as ECCS and CSS actuation timing. Table 6.2.1-5 also provides both full capacity and partial capacity (used for containment design evaluation) system operation parameters. These evaluations conclude that the acceptance criteria are met. Therefore, the CSS design is acceptable. Subsection 6.2.1.1 includes information about the energy content of the containment atmosphere and the recirculation water during the transients that are evaluated.~~

MIC-03-06-00006

~~Information on the integrated energy content of the containment atmosphere and RWSP water as functions of time following the postulated design basis LOCA and the integrated energy absorbed by the structural heat sinks and CS/RHR heat exchangers is provided in the following Tables and Figures :~~

- ~~Table 6.2.1-12, Distribution of Energy at Selected Locations within Containment for Worst Case Postulated DEPSG Break~~
- ~~Table 6.2.1-14, Distribution of Energy at Selected Locations within Containment for Worst Case Postulated DEHLG Break~~
- ~~Figure 6.2.1-84, Containment Energy Distribution Transient for DEPSG Break (C_D=1.0)~~
- ~~Figure 6.2.1-85, Containment Energy Distribution Transient for DEHLG Break (C_D=1.0)~~

6.2.2.3.3 Debris Generation

DCD_06.02.02-55

The SE of NEI 04-07 guidance report (GR) (Ref. 6.2-24) and the NRC letters to NEI (Ref. 6.2-46 and 6.2-47) are used to determine the zone of influence (ZOI) for generating debris. The diameter of the ZOI for RMI debris generation is 2 inside diameters of the worst-case break line and 4 inside diameters for coating debris. For the sump performance evaluation, the design basis debris quantities are based on the following:

- For RMI insulation, all insulation on a cross-over leg (CO/L) is considered to generate debris.
- No design fiber insulation debris is generated within the ZOI. As an operational margin for future plant modification, fiber insulation debris is assumed and included in the strainer design.
- For coating debris, the generated debris volume is based on the surface area for the ZOI from the main coolant pipe break and a conservative coating thickness. As an operational margin for the plant, an additional amount of coating debris is assumed and included in the strainer design.

For latent debris, 200 lbs of fiber and particulate is applied, as recommended in the guidance (Ref. 6.2-24). Specific material types for miscellaneous debris, such as tapes,

DCD_06.02.02-55

tags or stickers, reaching the strainer are not specified. Instead, a 200 ft^2 penalty of sacrificial strainer surface area per sump is considered as a margin for future detailed design and installation. These debris sources are controlled by the foreign material exclusion program that will be established by the plant owner.

The design basis debris for sump strainer performance is summarized in Table 6.2.2-4. More detailed information is provided in the Sump Strainer Performance Evaluation document (Ref. 6.2-34).

6.2.2.3.4 Debris Characteristics

The US-APWR assumes that all fiber debris within the ZOI is “fines”. The specification of debris characteristics used for the sump performance evaluation is determined based on the SE of NEI 04-07. (Ref.6.2-24). The SE classified fibrous debris into four groups as follows:

1. fines that remain suspended,
2. small piece debris that are transported along the floor,
3. large piece debris with the insulation exposed to potential erosion, and
4. large debris with the insulation undamaged but still protected by a covering and thereby preventing erosion.

Fine fiber debris is considered suspended and transportable to the strainer. The Post-LOCA 30-day erosion of small fiber debris into fines does not require consideration, because all fiber debris is already assumed to be fine.

RMI insulation debris is assumed to consist of 75 percent small fines and 25 percent large pieces, in accordance with the SE of NEI 04-07. (Ref 6.2-24). The RMI debris is considered as “non-suspended” in the sump pool due to its specific gravity. For RMI debris characterization, the effect of erosion during the 30 days of Post-LOCA operation is not required.

Coating debris within the ZOI is assumed to consist of 100 percent fines, in accordance with the SE of NEI 04-07. (Ref. 6.2-24). The effect of erosion is not considered for coating debris because coating debris is defined as fines.

The latent debris characteristics are based on the SE of NEI GR (Ref 6.2-24). Latent fiber comprises 15 percent (by mass) of the total latent debris loading (i.e., 200 lbs). The latent fiber is comparable to fiberglass “NUKON” insulation and is considered to be fines, as discussed above. The remainder of the latent debris consists of particulate debris, such as latent dust and dirt. Size distribution for latent particulate debris is based on the guidance found in NUREG CR-6877 (Ref.6.2-39). The effect of erosion is not required to be considered for latent debris.

6.2.2.3.5 Debris Transport

DCD_06.02.02-55

Debris transport is the estimation of the fraction of debris that is transported from debris sources (break location) to the sump strainer. The US-APWR assumes that all debris generated in the containment is transported to operable sumps. No debris entrapment in containment is credited in the debris transport evaluation.

The US-APWR has four ECC/CS trains with an independent strainer for each train. The design requires a minimum of two trains in operation, thereby assuming one train is out of service due to on-line maintenance and another one has a single failure. Therefore, transported debris in the sump pool is assumed to be distributed to two, three, or four sumps. The number of operable sumps during LOCA is a key parameter to determine the debris distribution to each sump. This logic establishes the conditions for subsequent evaluations.

For the strainer head loss evaluation, the number of available sumps should maximize the head loss, i.e., assume only two operable sumps. For the bypass debris, the number of operable sumps should maximize the amount of bypass debris, i.e., assume four operating sumps. A more detailed discussion is prepared in the Sump Strainer Performance document (Ref 6.2-34).

6.2.2.3.6 Debris Head Loss

The design basis strainer head loss (i.e., 4.0 ft of water at 120º F) is established to evaluate available Net Positive Suction Head (NPSH) of ECC/CS pumps (See section 6.2.2.3.7). The prototypical strainer head loss tests (Ref. 6.2-34) support the design basis strainer head loss with margin.

6.2.2.3.7 Net Positive Suction Head

From the Sump Strainer Performance Evaluation (Ref. 6.2-34), available Net Positive Suction Head (NPSH) was calculated using the most limiting conditions applicable to all events. For the NPSH available calculation, the containment pressure is assumed equal to the initial containment pressure prior to the start of the accident for low temperatures (sump fluid temperatures below the saturation temperature corresponding to the initial containment pressure). ~~At low temperatures, this methodology fulfills the requirements of RG 1.1 & RG 1.82 that the NPSH available be evaluated without crediting any increase in containment pressure resulting from accident conditions. This approach ensures that sufficient containment pressure is available under all accident conditions and that defense-in-depth is maintained by preserving the independence of systems designed to prevent accidents and those designed to mitigate the effects of accidents.~~

MIC-03-06-00071

For temperatures higher than this initial saturation pressure, the containment pressure is conservatively assumed to be equal to the sump fluid vapor pressure. This assumption is independent from the calculated increases in containment accident pressure; instead, the assumed containment pressure is dependent on the RWSP fluid temperature itself. No containment ~~over~~pressure above the fluid saturation pressure is credited (i.e., the containment pressure is assumed to equal the saturation pressure corresponding to the sump water temperature). The contribution to plant risk from this assumption is discussed further in Section 19.1.7.

DCD_06.02.02-55

MIC-03-06-00071

In accordance with the above methodology, the NPSH available exceeds the NPSH required for ECCS and CSS pump performance at all expected sump temperatures. Therefore, the RWSP strainer and US-APWR design provide sufficient available NPSH, with adequate strainer submergence, to ensure reliable operation of ECCS and CSS pumps. Further details and conservative assumptions are described in the Sump Strainer Performance Evaluation document (Ref. 6.2-34). DCD_06.02.02-55 MIC-03-06-00071 DCD_06.02.02-55

6.2.2.3.8 Vortexing, Sump Fluid Flashing and Deaeration

Vortexing, Sump Fluid Flashing, and Deaeration are additional issues associated with the NPSH calculation and sump strainer performance that are addressed in the US-APWR Sump Strainer Performance document (Ref. 6.2-34). These effects are analyzed for short-term, interim, and long-term post-LOCA recirculating conditions.

For vortexing, the strainer design exceeds the level of vortex prevention provided by minimum submergence alone, due to the low approach velocities, small hole size of the perforated plate, and overall stacked-disc geometry. No vortex formation was observed as a result of testing (Ref 6.2-34). MIC-03-06-00070 MIC-03-06-00071

For sump fluid flashing, the strainer is designed with sufficient submergence to preclude the occurrence the two-phase flow at the debris bed which can result in an unacceptable increase in strainer head losses. Air ingestion due to sump fluid flashing is not expected to occur, and therefore it will not adversely affect pump performance. (Ref. 6.2-34). DCD_06.02.02-55

For deaeration, air solubility at the strainer and pump elevations was evaluated. Significant levels of deaeration (i.e., void fraction) were not expected at either elevation (Ref 6.2-34). The air ingestion due to deaeration is not expected to adversely affect strainer performance or pump performance. The design basis NPSH requirement of the pumps is defined appropriately to account for the void fraction (Ref. 6.2-34). MIC-03-06-00071

6.2.2.3.9 Coatings Evaluation DCD_06.02.02-55

The US-APWR utilizes a DBA qualified and acceptable coating system in containment. These coating systems meet the requirements of Service Level-I coatings categorized in USNRC Regulatory Guide 1.54 Revision 1 (Ref, 6.2-41) and the related ASTM requirements described in RG 1.54. The criteria for those coating systems are contained in ANSI N101.2, "Protective Coatings (Paints) for Light Water Nuclear Reactor Containment Facilities" (Ref. 6.2-42), and its successor document, ASTM D 3911, "Standard Test Method for Evaluating Coatings Used in Light-Water Nuclear Power Plants at Simulated Design Basis Accident (DBA) Conditions" (Ref. 6.2-43). Only the epoxy type coatings (including primer and top coat) are used (refer to Section 6.1.2).

6.2.2.3.10 Chemical Effects Test

Chemical effects testing for the US-APWR was planned and conducted in order to obtain experimental data under postulated accident conditions of the plant, and to evaluate the corrosion products that may form in a post-LOCA environment. The detailed test plan and results were provided in the technical reports (Ref. 6.2-38). The test was conducted based on the US-APWR design basis post-LOCA containment condition and chemical debris source, and the test results were evaluated to quantify chemical debris assuming DCD_06.02.02-67

total dissolution debris precipitation. Additionally, based on the results of this test, the US-APWR sump strainer evaluation credits no precipitation of chemical debris above 150°F (Subsection 3.6.2.1 of Ref. 6.2-34). DCD_06.02.02-67

6.2.2.3.11 Upstream Effect DCD_06.02.02-55

Evaluation of the upstream effects is performed to identify flow paths leading to the RWSP which could become blocked and potentially hold-up the return water (creating ineffective pools) and, therefore, challenge the RWSP minimum water level evaluation. A partial sectional view of the RWSP concrete structure is shown in Figure 6.2.1-8. (Section 6.2.2.2.5 describes the RWSP function.) An outline of the paths that fluids from the ECCS and CSS would follow in a post-LOCA event and the formation of ineffective pools and potential holdup areas within the containment are shown in Figure 6.2.1-9. Figure 6.2.1-10 shows the volume of ineffective pools. The return pathways which are identified as possible choke points are 1) the overflow piping which drain from the reactor cavity and header compartment to the RWSP and 2) the refueling cavity drain lines which drain into the header compartment. The RWSP water level is shown in Figure 6.2.1-11. Also see Figures 6.2.1-12, 6.2.1-13, 6.2.1-14, and 6.2.1-15 for descriptions of debris interceptors, refueling cavity drain lines, and overflow lines. Gratings at the upper core internal laydown pit prevent large debris from reaching the refueling cavity drains. DCD_06.02.02-55 MIC-03-06-00070 DCD_06.02.02-55 MIC-03-06-00070

The overflow pipes are protected by debris interceptors, installed over the SG compartment floor openings and within the header compartment with spacing intervals that are smaller than the inner diameter of the overflow pipes (see Figure 6.2.1-14). The number and size of the reactor cavity drains and overflow pipes are shown to have sufficient drain capacity per the Sump Strainer Performance Evaluation (Ref. 6.2-34). Besides the overflow pipes and refueling cavity drains, no other drains or narrow pathways are credited for providing make-up to the RWSP.

The design basis minimum water level of the RWSP is 4.0 ft above the RWSP floor as shown in Figure 6.2.1-11, “RWSP Water levels.” The minimum water level for a SBLOCA is bounded by the LBLOCA level. DCD_06.02.02-55

6.2.2.3.12 Downstream Effects - Ex-Vessel

Assessment of the downstream effects, caused by post-LOCA operation with debris laden fluid for the US-APWR systems and components downstream of the sump strainer, is discussed in the Sump Strainer Downstream Effects report (Ref. 6.2-36) and Chapter 4, “Downstream Effects” of Ref. 6.2-34, “Sump Strainer Performance.”

Downstream systems and components include the Emergency Core Cooling System, Containment Spray System and the reactor core (see Subsection 6.2.2.3.13). Evaluation of the ECCS, CSS and their components concludes that these systems are fully capable of performing their intended functions under post-LOCA operating conditions. That is, the ECCS and CSS are fully capable of providing adequate core cooling to ensure the reactor core is maintained in a safe, stable condition following a LOCA.

DCD_06.02.02-55

6.2.2.3.13 Downstream Effects - In-Vessel

The US-APWR plant is designed to facilitate core cooling during a LOCA. Some portions of the chemical precipitates, fibrous and particulate debris generated in the containment vessel during a LOCA are prevented from flowing downstream into the reactor core. However, some of the debris may bypass the sump strainers and ultimately reach the reactor core. Due to this possibility, sump strainer downstream effects were assessed per Ref. 6.2-36. In this report, the evaluation of the effect of downstream debris build-up on long term core cooling demonstrates that the maximum temperature at the fuel cladding surface is below the acceptance temperature. This report also shows that chemical induced local blockages, or scale formation, on the fuel cladding surface of the reactor fuel, will not affect adequate decay heat removal capability.

Cladding temperatures are maintained below those required by Section 50.46 of Title 10 of the Code of Federal Regulations (10 CFR) and Ref. 6.2-48. Therefore, the ECCS and CSS are fully capable of providing adequate core cooling to ensure the reactor core is maintained in a safe, stable condition following a LOCA.

6.2.2.3.14 Sump Structural Analysis

The US-APWR strainer design by PCI, Sure-Flow Strainer (SFS), is based on proven design principles that were implemented in various operating plants. A description of the strainers is provided in Sub-section 6.2.2.2.6, “ECC/CS Strainers.” An evaluation of the structural components of the Emergency Core Cooling (ECC) and Containment Spray (CS) Systems sump strainer assembly was performed (Ref. 6.2-49).

The strainers consist of a series of perforated plate disks “sandwiched” onto a central core tube with gap spacers, tension rods and seismic rods to keep the required spacing between disks and maintain the stability of the structure (see Figure 1 of Reference 6.2-49). The ECC/CS sump strainer assembly is composed of the following two sub-assemblies:

1. A strainer stack assembly is composed of 21 individual disks fabricated from perforated stainless steel sheet and bolted together in vertical stacks. The disks are separated by spacers to form a stacked disk configuration. Each strainer stack has an interior core tube which channels the flow of water down to the underlying plenum. There are 9 vertical strainer stacks per sump, and each is supported by its own stainless steel plenum assembly. See Figures 3 and 8 of Reference 6.2-49.

2. A stainless steel plenum for each sump spans the top of the sump opening and provides structural support for the strainer stacks. The plenum also serves to direct the flow from each of the nine strainer stacks to the sump opening. The plenum fits tightly to the containment floor to form a seal and prevent debris from entering the sump.

Analysis of the strainer assembly was performed by using elastic methods for the defined loads. The structural qualification of the strainer assembly was performed using a combination of manual calculations and finite element analyses. The allowable stresses are primarily based on the ASME Code (Ref. 6.2-50) and are supplemented, as required,

for stresses induced by special components or loading conditions. The strainer assemblies are non-ASME equipment because they are non-pressure retaining components. The strainers are provided to prevent debris from entering the ECCS and CSS systems. Therefore, the strainer assemblies are defined as Equipment Class 2, seismic category I. MIC-03-06-00071

Equipment Class 2 components are analyzed in accordance with the ASME Code, Section III, Class 2 rules. Therefore, the detailed strainer evaluations were performed using the rules of the ASME Boiler and Pressure Vessel Code, Class 2 Components, as presented in ASME Section III, Division 1, Subsection NC. The structural support components were evaluated as component supports per Subsection NF-3350. Load combinations are developed based on Table 3.9-3 and 3.9-4 for ASME Section III, Class 2 component, and are utilized for stress analysis of the strainer assembly. The Strainer Stress Report (Ref. 6.2-49) concluded that all components of a sump strainer are in compliance with the requirements of the ASME Code, 2001 edition, up to and including the 2003 Addenda (Ref. 6.2-50). DCD_06.02.02-55 MIC-03-06-00071

6.2.2.3.15 Debris Interceptor Analysis

DCD_03.09.03-30

The US-APWR is designed with debris interceptors installed in the SG compartments and in the header compartment to prevent large debris from clogging the overflow pipes in the post-LOCA return flow path of recirculation water to the Refueling Water Storage Pit (RWSP).

The SG compartment debris interceptors are box-type steel mesh structures with 8 inch x 8 inch openings on the sides and a grating on top. The header compartment debris interceptors are a vertical riser-type frame with 8 inch x 8 inch mesh. For all debris interceptors, the mesh extends to a height higher than the postulated flooding level. The 8 inch x 8 inch mesh openings are sized to capture large debris that could potentially clog the overflow piping. See Figure 6.2.1-14 for the debris interceptor schematic drawing.

The debris Interceptor is non-ASME equipment because it is not a pressure retaining component, but is defined as Equipment Class 2 Seismic Category-I based on its safety function, as shown in Table 3.2-2. The debris interceptor will be evaluated using the applicable ASME Section III, Class 2 stress analysis limits. Mesh structure which is an element of the debris interceptor uses ASME Code, Subsection NC, Class 2 stress limit conservatively, and evaluated using load combinations that are listed in the DCD Table 3.9-3. The remaining steel structures that are considered component supports use ASME Code, Subsection NF, Class 2 stress limit, and evaluated using load combinations that are listed in the DCD Table 3.9-4.

The structural qualification of the debris interceptor is performed using a combination of manual calculations and finite element elastic analyses. The analysis is performed for the defined loads, including SSE and jet impingement loads.

6.2.2.4 Tests and Inspections

Chapter 14, Section 14.2 “Initial Plant Test Program,” is organized and conducted to develop confidence that the plant operates as designed. The initial test program verifies the design and operating features, and gathers important baseline data on the nuclear

steam supply system, as well as the balance-of-plant. The baseline data are used to establish the acceptability basis for surveillance and testing during the operational life of the plant. The three phases of the initial test program are as follows:

- Pre-operational tests
- Initial fuel loading and criticality
- low power and power ascension testing

The pre-operational test program tests each train of the CSS. Testing of the CS/RHR pumps using the full flow test line demonstrates the capability of the pumps to deliver the design flow.

Pre-operational tests provide assurance that individual components are properly installed and connected, and demonstrate that system design specifications are satisfied. Pre-operational testing demonstrates that limited interface requirements for support systems are satisfied. Formal review and approval of pre-operational test results (the “pre-operational plateau”) are performed prior to initial fuel loading and criticality. The pre-operational test program for the CSS is described in Chapter 14, Subsection 14.2.12.1.

Testing under maximum startup loading conditions is performed to verify the adequacy of the electric power supply. Maximum startup loading conditions testing is described in Chapter 14, Subsection 14.2.12.1.

Because the CSS is a standby system and not normally operating, periodic inservice pump, valve, and logic tests are performed. Chapter 16, “Technical Specifications,” requires that an IST program for pumps and valves be developed and implemented in accordance with the requirements of 10 CFR 50.55a(f) (Ref. 6.2-25).

All CSS valves are tested to demonstrate satisfactory performance in all expected operating modes. Testing of the CSS includes demonstration that the spray nozzles, spray headers, and piping are free of debris. Testing is performed during the initial startup testing in accordance with the guidance in RG 1.68 (Ref. 6.2-26 Appendix A).

The CS/RHR pumps are periodically tested with minimum or full pump flow to the piping loops during normal operation.

Testing of the initiation logic and interlock logic is described in Chapter 7, Section 7.1. Testing intervals of CSS components are listed in Chapter 3, Subsection 3.9.6.

Technical Specification surveillance 3.5.2.5 provides inspection requirements for strainer structural distress and evidence of abnormal corrosion.
Preservice and inservice examinations, tests, and inspections are performed in accordance with ASME Code Section XI, as required in Section 6.6.

6.2.2.5 Instrumentation Requirements

Four narrow-range pressure transmitters are provided. As described in Chapter 7, Section 7.3, the reactor protection system uses the narrow-range containment pressure transmitters to automatically actuate the following:

- CSS
- Containment isolation
- Main steam isolation
- Containment ventilation isolation
- ECCS

Narrow range containment pressure is indicated and alarmed in the MCR and RSC. A single, wide range containment pressure transmitter provides indication to the MCR and RSC.

Chapter 7, Subsection 7.3.1, describes instrumentation design details for actuating the CSS. Chapter 18, “Human Factors Engineering” identifies the CSS control panel locations and describes the instrumentation and alarm features of the human interface associated with the CSS information and control.

Chapter 5, Subsection 5.4.7, discusses other instrumentation associated with monitoring and controlling the RHR function of this system.

6.2.3 Secondary Containment Functional Design

The US-APWR design does not utilize a secondary containment. Rather than a secondary containment, portions of the primary containment are enclosed by containment penetration areas, which function to prevent the direct release of containment atmosphere to the environment through the containment penetrations. Containment penetration areas are served by the auxiliary building HVAC system during normal operation and by the annulus emergency exhaust system following a design basis accident. The annulus emergency exhaust system maintains the containment penetration areas at a negative pressure during accident conditions as described further in Subsection 6.5.1 and 9.4.5. Subsection 6.5.3.2 provides additional information on the function of the containment penetration areas.

DCD_06.02.06-34

Leakage paths which may result in bypass of the annulus emergency exhaust system were identified using the selection criteria of BTP 6-3 (Ref. 6.2-51). These potential penetration area bypass paths are listed in Table 6.2.4-3. Potential bypass leakage paths are limited to containment isolation valve seat leakage for piping which extends beyond the penetration areas serviced by the annulus emergency exhaust system. Closed systems credited as leakage barriers meet the requirements of BTP 6-3 for precluding bypass leakage.

DCD_06.02.06-34

6.2.4 Containment Isolation System

The containment prevents or limits the release of fission products to the environment. The containment isolation system allows the free flow of normal or emergency-related fluids through the containment boundary in support of reactor operations, but establishes and preserves the containment boundary integrity. The containment isolation system includes the system and components (piping, valves, and actuation logic) that establish and preserve the containment boundary integrity.

The criteria for isolation requirements and the associated system design are set forth in GDC 55 through 57 of Appendix A to 10 CFR 50. Unless acceptable on some other specific and defined basis (e.g., instrument lines), two isolation barriers are required; one inside and one outside of the containment. Isolation barriers are valves, unless the piping system inside the containment is neither part of the RCPB, nor communicates directly with the containment atmosphere, and is both suitably protected and robust. This section of the DCD describes the design and functional capabilities of the US-APWR containment isolation system in compliance with these GDC.

The containment penetration barriers consisting of the flange closure, personnel airlock and equipment hatch are under administrative control.

6.2.4.1 Design Bases

As described in Chapter 3, Subsection 3.1.5, the containment isolation system conforms to GDC 54, 55, 56, and 57, and is designed to seismic category I, quality group B.The containment isolation valves are identified as Equipment Class 1 or 2, as described in Chapter 3, Section 3.2. In addition to being protected from the effects of a postulated pipe rupture and containment missiles, closed systems inside the containment considered an isolation barrier under GDC 57 are designed to withstand the containment design temperature, pressure from the containment structural acceptance test, LOCA conditions, and to accommodate the internal fluid pressure associated with the containment temperature resulting from a design basis LOCA. Instrument lines closed both inside and outside containment are designed in accordance with the guidance provided by RG 1.11, RG 1.141 and satisfy NUREG-0800, SRP 6.2.4 (Ref. 6.2-27), acceptance criterion 1. The containment isolation system is designed in accordance with the Three Mile Island (TMI)-related requirements of 10 CFR 50.34(f)(2)(xiv)(A) through (E). The discharge side of the relief valves in the CS/RHR pump suction lines is designed to withstand and be tested at the containment design pressure.

Chapter 3, Sections 3.3 and 3.4 describe how the containment isolation system is designed to accommodate the wind ~~and tornado~~, tornado and hurricane loadings, and to withstand flood levels. The design requirements for protection from internally generated missiles (for isolation system components inside and outside of the containment) are described in Chapter 3, Section 3.5. The design for protection against the dynamic effects associated with the postulated rupture of piping is described in Chapter 3, Section 3.6, while the environmental qualification program for mechanical and electrical components of the containment isolation system is described in Section 3.11. The environmental qualification program for the containment isolation components considers the effects of short-term conditions inside containment, LOCA high radiation (in addition

DCD_02-03 S01

to the plant service life integrated dose), differential pressure, a high temperature, steam-laden atmosphere, and a wetting spray of mixed borated water and NaTB solution.

6.2.4.2 System Design

Electrical and mechanical equipment redundancy is incorporated in the design of the containment isolation system. Mechanical redundancy is provided by two barriers, and where actuation of two power-operated isolation valves on the same penetration (in series) is required, electrical redundancy is provided by independent power sources. Where remote-manual valves are acceptable and employed, remote position indication is provided, as well as detection of possible leakage.

Containment isolation valves may be gate, globe, butterfly, diaphragm, check (simple check valves are acceptable only inside containment), or relief valves (with a suitable relief setpoint).

The valve closure times are established with the objective of limiting any possible release of radioactive material to the amount that is as low as is reasonable attainable. In addition, fluid system mechanics (e.g., erosion, water hammer) and the possible effects of too-rapid closure on valve reliability are considered. Unless otherwise noted, power-operated valves 3 ½ in. to 12 in. close within the time determined by dividing the nominal valve diameter by 12 in. per minute. Valves larger than 12 in. diameter (nominal) close within one minute, unless an accident dose calculation is performed to show that a longer closure time does not result in a significant increase in the potential offsite doses. All power operated isolation valves have position indication in the main control room. Containment isolation valves 3 in. and smaller close within 15 seconds.

The pressure setpoint of the automatic containment isolation phase-A activated by the containment pressure rising is established according to the requirement of 10 CFR 50.34(f)(2)(xiv)(D). This setpoint (6.8psig) for containment isolation is selected as 10% of the containment design pressure (68 psig). This value consists of the maximum pressure in normal operating (2.0psig), the accuracy of the pressure instrument channel (2.5psi) and a certain margin to prevent inadvertent actuation (2.3psi). It is confirmed that this setpoint is adequate and small enough by dose evaluation using this setpoint (chapter 15, subsection15.6.5.5).

Systems that are including remote manual valve for containment isolation are followings:

- Safety injection system.
- Containment spray system
- Residual heat removal system
- Emergency feedwater system
- Main steam system
- Seal water injection

- Component cooling water system

DCD_09.02.02-58

- Post-accident sampling return line
- Fire protection water supply system

The condition in which containment isolation is needed in safety injection system, containment spray system and residual heat removal system is when leak occurs in these systems. These systems are located in safeguard component area. Leak detection system is installed in each system. Level instruments are installed in each pump compartment sump. In addition, if leak is occurred, operators can notice by pump suction/discharge pressure and pump flow rate. As for main steam system, NMS-MOV-507A, B, C, D, NMS-MOV-701A, B, C, D and EFS-MOV-101A, B, C, D are remote manual isolation valves. The condition in which containment isolation is needed is to prevent fission product from releasing such as in SGTR. In each main steam line, radiation monitors is installed. So operators can notice that these valves should be closed. As for seal water injection line, CVS-MOV-178 A, B, C, D are remote manual isolation valves. The condition in which containment isolation is needed is the case that seal injection flow is lost. In each injection line, flow rate instrument is installed. So operators can notice that these valves should be closed. The CCW supply and return line to the RCPs, NCS-MOV-402A/B, 436A/B, 438A/B, are remote manual isolation valves. Containment isolation would be considered if there were significant leakage from the CCWS, which could jeopardize the surge tank volume. Leakage can be recognized by operators as discussed in Subsection 9.2.2.3.2. As for post-accident sampling return line and fire protection water supply system, PSS-MOV-071 and FSS-MOV-004 are remote manual isolation valves. The reason why these valves does not receive containment isolation signal is that these are closed under administrative control, such as locked closed. Therefore, these valves are not needed to be closed if leak occur.

DCD_09.02.02-58

Containment purge isolation valves (Containment Purge System) may be supplied with resilient seals and the subject containment penetrations and containment isolation valves will receive preoperational and periodic Type C leak rate testing in accordance with 10 CFR 50, Appendix J. The soft seated containment isolation butterfly valves in the containment purge system which may require resilient seal replacement following the leakage rate testing will be subject to seals replacement based on a valve manufacturer recommendation.

Table 6.2.4-1 presents the design information regarding provisions for isolating the containment penetrations, while Table 6.2.4-2 and Figure 6.2.4-1 presents associated containment isolation configurations. Table 6.2.4-3 presents the list of containment penetrations and system isolation positions, which includes the information related to the pipe length from containment to outermost isolation valve.

6.2.4.3 Design Evaluation

The piping systems penetrating the containment are provided with leak detection, isolation, and containment capabilities. These piping systems are designed with the capability to test, periodically, the operability of the isolation valves and associated apparatus and determine if valve leakage is within acceptable limits.

The containment isolation system is able to perform its safety function in the event of any single active failure. The containment isolation system includes double isolation barriers at the containment penetrations. Redundant isolation valves are powered from separate electrical trains to provide containment isolation in the event of a single active failure in the electrical system. Therefore, containment isolation system meets the single failure criterion.

6.2.4.3.1 Evaluation of Conformance to General Design Criterion 55 of 10 CFR 50, Appendix A

Each line that is part of the RCPB and penetrates containment is provided with containment isolation valves, unless it can be demonstrated that the containment isolation provisions for a specific class of lines, such as instrument lines, are acceptable on some other defined basis. Isolation valves outside containment are located as close to containment as practical for those systems designed in conformance with GDC 55 or some other defined basis set forth in RG 1.141. The following systems penetrating containment meet GDC 55 criteria:

- SIS N_2 supply line to the accumulators, the RHRS return line, and the primary makeup water system (PMWS) demineralized water supply line, using one automatic isolation valve inside and one locked closed isolation valve outside the containment.

- RCS PMWS line to the PRT using three valves, one automatic isolation valve and one locked closed manual isolation valve inside and one automatic isolation valve outside containment.

- CVCS letdown line/charging line/seal injection line for RCPs/seal water return line, SIS SI line, process and post accident sampling system (PSS) pressurizer gas and liquid phase sampling line, in core instrument gas purge system (ICIGS) CO_2 line, waste management system (WMS) reactor coolant drain tank gas analysis line/N_2 supply and vent line/pump discharge line, accumulator sample line, and the RCS N_2 supply line to the pressurizer relief tank (PRT) using one automatic isolation valve inside and one automatic isolation valve outside the containment.

Containment isolation provisions for lines in ESF or ESF-related systems normally consist of two isolation valves in series. A single isolation valve is acceptable if the system reliability can be shown to be greater, the system is closed outside the containment, and a single active failure can be accommodated with only one isolation valve in the line. Table 6.2.4-2 lists GDC 55 systems with single valve isolation and justification, in accordance with the guidance in NUREG-0800, SRP 6.2.4 (Ref. 6.2-27).

6.2.4.3.2 Evaluation of Conformance to General Design Criterion 56 of 10 CFR 50, Appendix A

Each line that connects directly to the containment atmosphere and penetrates the primary reactor containment is provided with containment isolation valves as follows, unless it can be demonstrated that the containment isolation provisions for a specific

class of lines, such as instrument lines, are acceptable on some other defined basis. Isolation valves outside containment are located as close to containment as practical for those systems designed in conformance with GDC 56 or some other defined basis set forth in RG 1.141. The following systems penetrating the containment meet GDC 56 criteria:

- Fire protection water supply system (FSS) injection line to reactor cavity and station service air system (SSAS) service air line, using one automatic isolation valve inside containment and one locked closed isolation valve outside containment.

- CSS containment spray line, HVAC containment supply and exhaust line, plant radiation monitoring system (RMS) containment air sampling line, WMS containment sump pump discharge line, refueling water recirculation pump suction and discharge line, instrument air system (IAS) instrument air line, non-essential chilled water system containment fan cooler lines, and FSS water supply line to containment air purification unit, using one automatic isolation valve inside and one automatic isolation valve outside the containment.

- Leakage rate testing narrow range pressure detection line, using one locked closed isolation valve inside with a pipe cap and one locked closed isolation valve outside the containment.

- Component cooling water system (CCWS) supply line to the RCPs, using two ~~automatic~~ containment isolation valves of which the outboard valve is capable of remote manual operation. | DCD_09.02.02-58

- CCWS return line from RCPs, using two ~~automatic~~ containment isolation valves, one inside and one outside of the containment, each capable of remote manual operation. | DCD_09.02.02-58

Containment isolation provisions for lines in ESF or ESF-related systems normally consist of two isolation valves in series. A single isolation valve is acceptable if the system reliability can be shown to be greater, the system is closed outside the containment, and a single active failure can be accommodated with only one isolation valve in the line. In addition, penetrations exist that do not contain isolation valves, these lines are typically blank flanged. Table 6.2.4-2 lists GDC 56 systems with single valve isolation or blank flanges and justification, in accordance with the guidance in NUREG-0800, SRP 6.2.4 (Ref. 6.2-27).

6.2.4.3.3 Evaluation of Conformance to General Design Criterion 57 of 10 CFR 50, Appendix A

Each line that penetrates the containment and is neither part of the RCPB nor connected directly to the containment atmosphere has at least one containment isolation valve that is automatic, locked closed, or capable of remote manual operation. These valves are outside the containment and are located as close to the containment as practical. The following systems penetrating the containment meet GDC 57 criteria:

- Main steam and feedwater system (MSFWS) feedwater line and steam generator blowdown system (SGBDS) SG blowdown line, using one automatic containment isolation valve outside the containment, each capable of remote manual operation.

- MSFWS main steam line, using one containment isolation valve outside containment capable of remote manual operation.

- CCWS inlet and outlet for letdown and excess letdown heat exchanger, using one outboard containment isolation valve each to and from the containment capable of automatic operation.

6.2.4.4 Tests and Inspections

Provisions for 10 CFR 50, Appendix J (Ref. 6.2-28) Type C leakage rate testing include test connections in the process piping. Chapter 14, “Verification Programs”, describes and discusses the initial testing and operation of all plant systems, including the containment isolation system. Leakage rate testing is further described in Subsection 6.2.6. Inservice testing of components and systems to assure continuing operability is required by 10 CFR 50.55a(f). To meet this requirement, Chapter 16, “Technical Specifications” specifies periodic Type A, B, and C leakage rate testing.

Inspection, surveillance, and periodic testing of reactor containment penetrations, particularly those with resilient seals and expansion bellows, will be performed to provide assurance that containment penetrations will function as designed in accordance with the requirements of GDC 53. The US-APWR leakage rate testing program implements RG 1.163 (Ref. 6.2-30) which endorses NEI 94-01 (Ref 6.2-31) with modifications.

6.2.5 Combustible Gas Control in Containment

The containment hydrogen monitoring and control system consists of the following systems:

- Hydrogen monitoring system

- Hydrogen ignition system

The hydrogen monitoring system consists of one hydrogen monitor that is located outside of the containment and measures hydrogen concentration in containment air extracted from the containment through the radiation monitoring system containment air sampling line. The containment penetration portion of this line is shared with the post-accident containment atmospheric sampling line.

Hydrogen concentration is continuously indicated in the MCR after the containment isolation valves of the radiation monitoring system (RMS) containment air sampling line are manually opened. Figure 6.2.5-1 presents a schematic of the hydrogen monitoring system.

The hydrogen ignition system consists of twenty hydrogen igniters that are positioned in containment areas and subcompartments where hydrogen may be produced, transit, or collect as follows:

- One hydrogen igniter near the PRT
- One hydrogen igniter in the upper area of the pressurizer compartment
- One hydrogen igniter in the lower area of the pressurizer compartment
- Four hydrogen igniters, one in each SG/reactor coolant loop subcompartment
- Four hydrogen igniters in the 2nd floor of containment
- Four hydrogen igniters in the 3rd floor of containment
- Five hydrogen igniters in the containment dome (near the top of each SG and pressurizer subcompartments)

The hydrogen ignition system is automatically initiated by the ECCS actuation signal. This system may also be actuated manually. The hydrogen igniters reduce the concentration of hydrogen in the containment. The hydrogen igniters are designed to burn hydrogen continuously at a low concentration, thus, preventing significant hydrogen accumulation. Hydrogen igniters limit combustible gas concentration in the C/V following an accident, uniformly distributed, to less than 10% (by volume). DCD_06.02.05-43

The containment spray system, in conjunction with convective heat transfer and hydrogen diffusivity, performs atmospheric mixing to ensure uniform distribution of hydrogen and contact with the installed hydrogen igniters. Figure 6.2.5-2 presents the typical air-hydrogen flow patterns within the C/V. The containment spray system is a design-basis safety-related system which is reliable, redundant, single-failure-proof, able to be tested and inspected, and remains operable with a loss of onsite or offsite power per RG 1.7, Rev. 3. The technical report "US-APWR Probabilistic Risk Assessment" Section 15.3.3 (Ref. 6.2-37) demonstrates that the atmospheric mixing provided by the containment spray system as well as the combustible gas control provided by the hydrogen igniters ensures that combustible gases will not accumulate within a compartment or cubicle to form a combustible or detonable mixture that could cause loss of containment integrity.

~~Hydrogen igniters limit combustible gas concentration in the C/V following an accident, uniformly distributed, to less than 10% (by volume). Figure 6.2.5-2 presents the typical air-hydrogen flow patterns within C/V. Convective heat transfer and hydrogen diffusivity, in conjunction with containment spray discharges, ensure uniform mixing of hydrogen and contact with the installed hydrogen igniters.~~

6.2.5.1 Design Bases

The containment hydrogen monitoring and control system is designed in accordance with 10 CFR 50.34(f)(2)(ix), “Additional TMI-related requirements;” 10 CFR 50.44, “Combustible Gas Control for Nuclear Power Reactors;” and GDC 41, “Containment

Atmosphere Cleanup." ~~The systems~~The containment hydrogen monitoring and control system and the containment spray system also address the recommendations of RG 1.7, "Control of Combustible Gas Concentrations in Containment;" and NUREGs 0737 and 0660, as presented in Section 1.9. DCD_06.02.05-43

As noted in RG 1.7 (Ref. 6.2-29), the potential for combustible gases (principally hydrogen) to be generated may arise from an accident that is more severe than a postulated design-basis accident. Thus, in the unlikely occurrence of such an accident, the availability of containment hydrogen monitoring and control provides the added assurance that a significant challenge to the containment integrity (up to and including containment breach) is prevented.

6.2.5.2 System Design

The containment hydrogen monitoring and control system design includes the following:

- One hydrogen monitor that measures hydrogen concentration in containment air
- Hydrogen concentration indication in the MCR
- Power supply from two non-Class 1E buses capable of cross-connection and non-Class 1E alternate alternating current (ac) gas turbine generator backed,in addition, dedicated batteries with the capacity to provide power for at least 24 hours DCD_19-560
- Twenty hydrogen igniters, ~~located in the containment~~eleven of which are powered by batteries in addition to AC power located in the containment. Battery backed-up igniters are as follows:
  - One near the PRT
  - One in the lower area of the pressurizer compartment
  - One in each of the four SG/reactor coolant loop subcompartments
  - Two in the second floor of containment, near the PRT
  - Three in the containment dome (two near the top of SG compartment and one near the top of pressurizer compartment)
- Capability for operability testing during plant operation
- Materials of construction compatible with severe accident environment

A diagram of the containment hydrogen monitoring and control system is presented in Figure 6.2.5-1. Containment hydrogen monitoring and control design parameters are found in Table 6.2.5-1.

Hydrogen monitoring system provides an ability to monitor and record the containment hydrogen concentration continuously at least 24 hours in the MCR. Service testing and calibration of the hydrogen monitoring system is always available because this system is located at outside of the containment. Monitoring and recoding are functional within 90 minutes after the initiation of safety injection with satisfying the requirements described in Revision 3 of RG 1.7 C.2.1 (Ref. 6.2-29).

The hydrogen monitoring and control system is supplied by the non-Class 1E P1 and P2 power system, with alternate power capability. P1 and P2 buses are capable of cross-connection, providing power to both motor control centers (MCCs). Both P1 and P2 buses are backed by non-Class 1E alternate ac gas turbine generators. The power distribution to the monitor and igniters is designed to minimize the impact of the loss of any single power source. In case of complete loss of AC power, resulting from simultaneous failure of two non-Class 1E alternate ac gas turbine generators, dedicated batteries supply power to 11 out of 20 hydrogen igniters. As noted above, the containment hydrogen concentration is indicated in the MCR. This system may also be actuated manually. DCD_19-560

The containment hydrogen monitoring and control system is not designed for seismic category I requirements since this system is required for plant protection for beyond design-basis accident. However, in considering the importance of the containment hydrogen monitoring and control system in order to maintain the containment integrity during postulated severe accidents, it is designed satisfying the plant HCLPF (high confidence of low probability failure) is evaluated more than 0.5G.

The containment hydrogen monitor and igniters are designed to function in a severe accident environment. Chapter 19, Subsection 19.2.3.3.7 describes equipment survivability in severe accident conditions inside the containment. Detailed evaluation of the equipment survivability is provided in the technical report “US-APWR Probabilistic Risk Assessment” Section 15.7 (Ref. 6.2-37). The hydrogen igniters can perform its function during and after exposure to the environmental conditions created by hydrogen burn. Through the equipment survivability study, it is evaluated that the peak temperature of containment atmosphere becomes as high as approximately 1200°F, and the temperature rise from 400°F and reduced back to 400°F due to hydrogen burn takes approximately 10 minutes. The amount of hydrogen burnt in this analysis is conservatively assumed to be 100% active fuel length cladding reaction, hence this analysis broadly covers various uncertainties involved in the hydrogen generation and burn.

Therefore, in terms of the equipment survivability, it is required that the hydrogen ignition system must keep its function longer than 10 minutes under the condition of containment atmosphere with higher than 400°F and its peak temperature to be as high as 1200°F.

The twenty hydrogen igniters are strategically located around the containment: one near the PRT, one in the upper area of the pressurizer subcompartment, one in the lower area of the pressurizer subcompartment, four in the SG/reactor coolant loop subcompartment (one in each subcompartment), four in the 2nd floor of the containment, four in the 3rd floor of the containment and five in the containment dome (near the top of each SG and pressurizer subcompartments). The igniters are located a sufficient distance from large

equipment, ceilings, and walls to promote the efficient combustion of hydrogen. A drip shield is provided to protect the igniter from falling water (i.e., containment condensation or spray). The location and operation of hydrogen igniters does not affect the ability to monitor containment hydrogen concentration during severe accidents, or test conditions.

The hydrogen igniters are installed in a manner ensuring that they do not degrade the existing safety-related systems, including making the non-safety equipment as independent as practicable from existing safety-related systems. This will be accomplished in part, by locating the 20 igniters in open areas of the containment away from safety-related equipment.

The containment hydrogen monitor is of a type and manufacture widely used in commercial nuclear power plants currently licensed by the NRC. The containment hydrogen monitoring equipment is regularly calibrated and the components verified operable, as required by the plant surveillance test program. The containment hydrogen monitor located outside of the containment analyzes the hydrogen concentration in containment air and continuously indicates hydrogen concentration in the MCR after the containment isolation valves of the RMS containment air sampling line are manually opened.

6.2.5.3 Design Evaluation

Hydrogen monitoring and control is provided for the unlikely occurrence of an accident that is more severe than a postulated design-basis accident. Thus, the hydrogen monitor has detection and display ranges of 0 to 10% by volume in the containment air. This monitoring range satisfies the requirements of 10 CFR 50.34(f)(2)(ix)(A) and 50.44(c)(2) for combustible gas control. The accuracy of the hydrogen monitor is less than or equal to ±10% of full span. The measured value of hydrogen concentration is utilized for operator actions and this accuracy is sufficient to accomplish the actions. These operator actions are briefed in Subsection 19.2.5. The hydrogen igniters are automatically energized by the ECCS actuation signal. However, the design evaluation is neither required nor provided for such a beyond-design-basis event.

Beyond-design-basis evaluations documented in Chapter 19 include a combustible gas release within containment corresponding to the equivalent amount of combustible gas that would be generated from a 100% fuel-clad coolant reaction, uniformly distributed. As discussed in Section B of Revision 3 of RG 1.7 (Ref. 6.2-29), these Chapter 19 evaluations are intended to show that hydrogen concentrations, uniformly distributed, do not exceed 10 volume percent (10 vol.%) and that the structural integrity of the containment pressure boundary is maintained. Detailed evaluation for hydrogen generation and control is provided in the technical report “US-APWR Probabilistic Risk Assessment” Section 15.3 and Attachment 15A (Ref. 6.2-37). DCD_06.02.05-43 DCD_06.02.05-44

6.2.5.4 Tests and Inspections

6.2.5.4.1 Preservice Testing

Chapter 14 describes the initial test program, which includes the pre-operational and startup testing.

Pre-operational testing of the hydrogen monitoring system is performed either before or after installation but prior to plant startup to verify performance. The hydrogen monitor test and design criteria, including those listed in Regulatory Guide 1.7, are incorporated into the hydrogen monitor procurement specifications. Following completion of fabrication, the hydrogen monitor acceptance tests are conducted with known samples. The hydrogen monitor is required to be reflected operating experience on the hydrogen monitor. Test results are collected, checked, and evaluated in a report and are reviewed to verify the performance capability of the hydrogen monitor. The design documents of hydrogen monitor (design and fabrication drawings, calculations, bill of materials, test conditions and procedures, reports, etc.) are reviewed to verify that the design and fabrication meet the criteria specified in the procurement specifications. The hydrogen monitor, when completed, undergoes acceptance testing. This procedure insures that the hydrogen monitor is consistent with the design criteria. After installation, the hydrogen monitor design undergoes calibration tests prior to start-up. Based on industrial experience and the manufacturer's recommendation, the calibration tests are also conducted periodically to insure that the performance capability of the hydrogen monitor meets the design criteria.

Pre-operational testing and inspection of the hydrogen ignition system is performed after installation and prior to plant startup to verify operability of the hydrogen igniters. Verification of the hydrogen igniter positions is also performed. This verification confirms that the surface temperature of the hydrogen igniters meets or exceeds the hydrogen ignition temperature specified in Table 6.2.5-1, thereby ensuring ignition of hydrogen concentrations above the flammability limit.

6.2.5.4.2 Inservice Testing

Periodic testing and calibration are performed to provide ongoing confirmation that the hydrogen monitoring function can be reliably performed. The testing and calibration for hydrogen monitor meet the requirement of RG 1.7 Rev.3 (Ref. 6.2-29).

The hydrogen ignition system is normally in standby. Periodic inspection and testing are performed to confirm the continued operability of the hydrogen ignition system. Operability testing consists of energizing the hydrogen igniters and confirming that the surface temperature meets or exceeds the hydrogen ignition temperature specified in Table 6.2.5-1, thereby ensuring ignition of hydrogen concentrations above the flammability limit. The hydrogen ignition system is also tested to automatically initiated by the ECCS actuation signal.

6.2.5.5 Instrumentation Requirements

One hydrogen monitor is installed to measure hydrogen concentration in containment air.

The hydrogen monitoring system is manually initiated after the containment isolation valves of the RMS containment air sampling line are manually opened. Hydrogen concentration indication is continuously displayed in the MCR.

The hydrogen ignition system is automatically energized by the ECCS actuation signal. The hydrogen ignition system may also be manually operated, as needed, in response to the indications of the hydrogen monitoring system.

6.2.6 Containment Leakage Testing

GDC 52, 53, and 54 of Appendix A to 10 CFR 50 require that the reactor containment vessel and piping systems that penetrate the containment be designed to accommodate periodic leakage rate testing. Further, Appendix J to 10 CFR 50 (Ref. 6.2-28), specifies leakage testing requirements for the containment, its penetrations, and isolation valves (Type A, B, and, C tests). The containment leakage rate testing program and limits are identified in Chapter 16. The US-APWR leakage rate testing program implements the performance-based leakage testing requirements of 10 CFR 50 Appendix J, Option B using the specific methods and guidance provided in NEI 94-01 (Ref. 6.2-31) and ANSI/ ANS-56.8-1994 (Ref. 6.2-35), as modified and endorsed by RG 1.163 (Ref. 6.2-30) including the following elements:

- Maximum allowable containment integrated leakage rate
- Pretest requirements
- Venting of fluid systems in containment atmosphere
- Stabilization of containment conditions (temperature, pressure, humidity)
- Testing methodology
- Acceptance criteria (including allowable margins from maximum allowables)

6.2.6.1 Containment Integrated Leakage Rate Testing

As discussed above, specific requirements for Type A (Option B), containment integrated leakage rate testing program are identified in Chapter 16, “Technical Specifications,” The COL Applicant that references the US-APWR certified design for construction and operation is responsible for identifying the milestone for the containment leakage rate testing program. Sheets 46 and 47 of Figure 6.2.4-1 presents the permanently installed penetrations for the containment integrated leakage rate testing. These penetrations are capped and sealed during normal reactor operation, with compressed air equipment suitable to perform the test temporarily connected.

10 CFR 50 Appendix J Option B Type A testing is initially performed during preoperational testing following completion of the Reactor Building construction including the installation of all mechanical, electrical and instrument systems, or portions of systems, penetrating the containment boundary. The first periodic Type A test is performed within 48 months after the successful completion of the last preoperational Type A test. Periodic Type A tests are performed at a frequency of at least once per 48 months until acceptable performance is established in accordance with NEI 94-01 (Ref. 6.2-31), with subsequent testing frequencies determined in accordance with NEI 94-01 as specified in the containment leakage rate testing program. The interval for periodic testing begins at initial reactor operation, and the interval for subsequent tests begins upon completion of a Type A test and ends at the start of the next test.

Test prerequisites include the following:

- Completion of a general visual inspection of accessible interior and exterior surfaces of the containment system for structural problems which may affect either the containment structure leakage integrity or the performance of the Type A test. Any significant structural problems identified are corrected before the initiation of the containment inspection.

- Closure of containment isolation valves for the Type A test shall be accomplished by normal operation and without any preliminary exercising or adjustments (e.g., no tightening of valve after closure by valve motor).

- Containment penetrations, including equipment and personnel airlocks, are closed.

- Test instrumentation is available and calibrated.

- During the period between the initiation of the containment inspection and the performance of the Type A test, no repairs or adjustments shall be made so that the containment can be tested in as close to the "as is" condition as practical.

- The preoperational Type A test is performed after completion of the containment structural integrity preoperational test.

Vent and Drain conditions are established as follows prior to the Type A test:

- Portions of fluid systems, which are part of the containment boundary that may be opened directly to the containment or outside atmosphere under post-accident conditions, are opened or vented to the appropriate atmosphere to place the containment in conditions as close to post-accident conditions as possible.

- Portions of closed systems inside containment that penetrate containment and rupture as a result of a loss of coolant accident shall be vented to the containment atmosphere.

- All vented systems shall be drained of water or other fluids to the extent necessary to assure exposure of the system containment isolation valves to containment air test pressure and to assure they will be subjected to the post accident differential pressure.

- Systems that are required to maintain the plant in a safe condition during the test shall be operable in their normal mode, and need not be vented.

- Pathways in systems that are normally filled with fluid and operable during post-accident conditions are not required to be vented.

- Portions of the pathways outside of containment that are designed to Seismic Category I and to at least Safety Class 2 are not required to be vented.

- Pathways which are Type B or C tested within the previous 24 calendar months need not be vented or drained except for the preoperational integrated leakage rate testing.

- For planning or scheduling purposes, or ALARA considerations, pathways in systems which are Type B or C tested within the previous 24 calendar months need not be vented or drained during the Type A test, except for the preoperational integrated leakage rate testing.

- Exceptions to venting and draining leakage pathways during Type A tests are in accordance with ANSI/ANS 56.8-1994 and NEI 94-01.

Type A testing is conducted in accordance with ANSIIANS-56.8-1994 (Ref. 6.2-35). The containment is slowly pressurized with clean, dry air using portable compressors, filters and dryers until the containment pressure equals the calculated accidental peak containment internal pressure, Pa. The containment atmosphere is allowed to stabilize, consistent with the guidance of ANSI/ANS-56.8 (Ref. 6.2-35), before beginning the Type A test. The test duration is consistent with the guidance of ANSI/ANS-56.8 (Ref. 6.2-35). Periodic measurements of containment pressure and humidity are collected and evaluated to determine the rate of decrease in the mass of air inside containment in accordance with the guidance of ANSI/ANS-56.8 (Ref. 6.2-35). After completing the initial Type A test, a verification test is performed to confirm the validity of the test results using the methods prescribed by ANSI/ANS-56.8 (Ref. 6.2-35).

The maximum allowable containment leakage rate, La, the calculated peak containment internal pressure for the design basis loss of coolant accident, Pa, and the acceptance criteria for the Type A tests is specified by the Technical Specifications in Subsection 5.5.16. For the initial preoperational Type A test, the integrated leak rate shall be < 0.75 La. For periodic Type A tests, the containment leakage rate acceptance criterion is 1.0 La. During the first unit startup following testing in accordance with the containment leakage rate testing program, the leakage rate acceptance criteria are < 0.75 La for Type A tests. Test methods, analysis and acceptance criteria for Type A testing meet the guidance of RG 1.163, NEI 94-01 and ANSI/ANS-56.8-1994.

Any major modification or replacement of components that affect reactor containment integrity that are performed after the initial Type A test are followed by either a Type A test or a Type B test of the modified portion of the containment boundary.

If Type A testing does not meet acceptance criteria, the reason or reasons for failure shall be identified, corrected and retesting will be performed. Acceptable performance shall be re-established by performing the next Type A test within 48 months following the successful retest

6.2.6.2 Containment Penetration Leakage Rate Testing

Figure 6.2.4-1 illustrates the containment hatches (personnel airlocks and equipment hatch) and electrical penetrations that are Type B tested. In addition, the seals on the fuel transfer tube (containment end) blind flange are tested (Type B). Other penetrations that are Type B tested are listed in Table 6.2.4-3.

10 CFR 50 Appendix J Option B Type B testing is initially performed during preoperational testing following completion of the Reactor Building construction, and performed periodically thereafter, as specified in Technical Specifications, Subsection 5.5.16, Containment Leakage Rate Testing Program.

The first periodic Type B tests are performed at a frequency of at least once per 30 months until acceptable performance is established in accordance with NEI 94-01 (Ref. 6.2-31), with subsequent testing frequencies determined in accordance with NEI 94-01 (Ref. 6.2-31) as specified in the containment leakage rate testing program, not to exceed 120 months.

Type B test methods and techniques are consistent with ANSI/ANS 56.8-1994 (Ref. 6.2-35).

Type B leak tests are performed using local pressurization at a test pressure equal to or greater than Pa, using either a pressure-decay method or a flowmeter method. For the pressure-decay method, the rate of pressure decay of a known test volume is used to determine the leakage rate. The flowmeter method maintains the test boundary at test pressure by addition of air or nitrogen through a calibrated flowmeter, which indicates the leakage rate. Door seals for the personnel airlocks are Type B leakage rate tested by pressurizing the airlock, and suitable permanent test fixtures and gauges are provided. Similarly, the equipment hatch seals are leakage rate tested.

The acceptance criteria for the air lock leak rate testing are:
a) Overall air lock leakage rate is ≤ 0.05 La when tested at ≥ Pa.
b) For each door, leakage rate is ≤ 0.01 La when pressurized to ≥ 10 psig.

Acceptance criteria for the combined As-left leakage rate for all penetrations subject to Type B or Type C preoperational and periodic operational testing is < 0.60 La, consistent with NEI 94-01 (Ref. 6.2-31). The combined leakage rate determinations are based on the latest leakage rate test data available and are maintained as a running summation of the leakage rates.

6.2.6.3 Containment Isolation Valve Leakage Rate Test

As defined in 10 CFR 50, Appendix J, "Type C Tests" means tests intended to measure containment isolation valve leakage rates. The containment isolation valves included are those that:

1. Provide a direct connection between the inside and outside atmospheres of the primary reactor containment under normal operation, such as purge and ventilation, vacuum relief, and instrument valves;

2. Are required to close automatically upon receipt of a containment isolation signal in response to controls intended to affect containment isolation;

3. Are required to operate intermittently under post accident conditions; and

4. Are in main steam and feedwater piping and other systems which penetrate containment of direct-cycle boiling water power reactors" (Item 4 is not applicable to US-APWR)

Table 6.2.4-3 presents a listing of containment penetrations and their system isolation valves. The table identifies the test type to be performed on each penetration/valve as applicable. The provisions for testing the individual isolation valves (e.g., test connections and drains) are shown in Figure 6.2.4-1 and individual system piping and instrumentation diagrams (P&IDs). CIVs are tested so that the test pressure is applied in the same direction that would occur in a DBA.

10 CFR 50 Appendix J Option B Type C testing is initially performed during preoperational testing following completion of the Reactor Building construction. The first periodic Type C tests are performed at a frequency of at least once per 30 months until acceptable performance is established in accordance with NEI 94-01 (Ref. 6.2-31), with subsequent testing frequencies determined in accordance with NEI 94-01 (Ref. 6.2-31) as specified in the containment leakage rate testing program, not to exceed 60 months, consistent with RG 1.163 (Ref. 6.2-30).

Type C test methods and techniques are consistent with ANSI/ANS 56.8-1994 (Ref. 6.2-35).

Type C testing leakage rate results are used to determine the combined leakage rate for all Type B and C penetrations as discussed above.

6.2.6.4 Scheduling and Reporting of Periodic Tests

The proposed schedule and test report content requirements associated with performing pre-operational and periodic leakage rate testing are in accordance with the guidance provided in NEI 94-01 (Ref. 6.2-31), as modified and endorsed by the NRC in RG 1.163(Ref. 6.2-30). The results of preoperational and periodic Type A, Band C tests must be documented to show that the performance criteria for leakage have been met. The comparison to previous results of the performance of the overall containment system and of individual components within it must be documented to show that the test intervals established for the containment system and components within it are adequate.

6.2.6.5 Special Testing Requirements

~~The US-APWR does not have a secondary containment or a sub-atmospheric primary containment, therefore there are no special testing requirements in addition to the requirements of Subsections 6.2.6.1 through 6.2.6.4 above.~~Leakage paths that may bypass the penetration areas and the annulus emergency exhaust system are identified in Table 6.2.4-3 and will be Type C tested as part of the containment leakage rate test program with additional acceptance criteria to ensure that the assumptions of the safety analysis are met. The total combined leakage from all Type C tests shall be below the amount assumed for bypass leakage to the environment in DCD Tables 6.5-5 and 15.6.5-4.

DCD_06.02.06-34

DCD_06.02.06-35

6.2.7 Fracture Prevention of Containment Pressure Vessel

Ferritic containment pressure boundary materials include the ferritic portions of the containment vessel and all penetration assemblies or appurtenances attached to the containment vessel; all piping, pumps and valves attached to the containment vessel, or to penetration assemblies out to and including the pressure boundary materials of any valve required to isolate the system and provide a pressure boundary for the containment function.

Ferritic containment pressure boundary materials meet the fracture toughness criteria and requirements for testing identified in Article NE-2000 of Section III, Division 1 (Ref. 6.2-32) or Article CC-2000 of Section III, Division 2 of the ASME Code (Ref. 6.2-33).

6.2.8 Combined License Information

Any utility that references the US-APWR design for construction and Licensed operation is responsible for the following COL items:

COL 6.2(1) *Deleted*

COL 6.2(2) *Deleted*

COL 6.2(3) *Deleted*

COL 6.2(4) *Deleted*

COL 6.2(5) *Preparation of a cleanliness, housekeeping and foreign materials exclusion program is the responsibility of the COL Applicant. This program ~~addresses other debris sources such as latent debris inside containment. This program minimizes foreign materials in the containment.~~will be established to limit 200lbs of latent debris, and to limit the allocated 200ft^2 of miscellaneous debris per sump.* MIC-03-06-00007 MIC-03-06-00067

COL 6.2(6) *Preparation of administrative procedures is the responsibility of the COL Applicant. The procedures will ensure that RMI and fiber insulation debris within ZOIs will be consistent with the design basis debris specified in the Table 6.2.2-4, and will ensure that the aluminum in containment exposed to water in containment in post-LOCA condition (i.e., spray and blowdown water) is limited to equal or less than 810ft^2.* MIC-03-06-00008 DCD_06.02.02-66

COL 6.2(7) *Deleted*

COL 6.2(8) *The COL Applicant is responsible for identifying the implementation milestone for the containment leakage rate testing program described under 10 CFR 50, Appendix J.*

COL 6.2(9) *Deleted*

COL 6.2(10) *Deleted*

6.2.9 References

6.2-1 GOTHIC Containment Analysis Package User Manual, Version 7.2a(QA), NAI 8907-02, Rev. 17, Numerical Applications Inc., Richland, WA, January 2006.

6.2-2 GOTHIC Containment Analysis Package Technical Manual, Version 7.2a(QA), NAI 8907-06, Rev. 16, Numerical Applications Inc., Richland, WA, January 2006.

6.2-3 GOTHIC Containment Analysis Package Qualification Report, Version 7.2a(QA), NAI 8907 09, Rev. 9, Numerical Applications Inc., Richland, WA, January 2006.

6.2-4 LOCA Mass and Energy Release Analysis Code Applicability Report for US-APWR, MUAP-07012-P-A Rev. 2 (Proprietary) and MUAP-07012-NP Rev. 2 (Non-Proprietary), June 2009.

6.2-5 Letter from Gerald T. Bischof (Virginia Electric and Power Company) to United States Nuclear Regulatory Commission dated November 6, 2006, Transmittal of Approved Topical Report DOM-NAF-3 NP-A, "GOTHIC Methodology for Analyzing the Response to Postulated Pipe Ruptures inside Containment." ADAMS Accession No. ML063190467.

6.2-6 Schmitt, R.C., et al., Simulated Design Basis Accident Tests of the Carolinas Virginia Tube Reactor Containment Final Report, IN-1403, Idaho Nuclear Corporation, Idaho Falls, ID, 1970.

6.2-7 Design Report for the HDR Containment Experiments V21.1 to V21.3 and V42 to V44 with Specifications for the Pre-Test Computations, Report No. 3.280/ 82, January, 1982.

6.2-8 U.S. Nuclear Regulatory Commission, Marx, K.D., Air Currents Driven by Sprays in Reactor Containment Buildings, Sandia Report SAND 84-8258, NUREG/CR-4102, May 1986.

6.2-9 Letter from Anthony C. McMurtray (NRR) to Thomas Coutu (NMC) dated September 29, 2003, Kewaunee Nuclear Power Plant - Issuance of Amendment (TAC NO. MB6408), ADAMS Accession No. ML032681050.

6.2-10 Letter from John G. Lamb (NRR) to Thomas Coutu (NMC) dated February 27, 2004, Kewaunee Nuclear Power Plant – Issuance of Amendment Regarding Stretch Power Uprate (TAC NO. MB9031), ADAMS Accession No. ML040430633.

6.2-11 U.S. Nuclear Regulatory Commission, Interim Staff Position on Environmental Qualification of Safety Related Electrical Equipment, NUREG-0588 Rev 1, November 1980.

6.2-12 Ishii, M., One-Dimensional Drift-Flux Model and Constitutive Equations for Relative Motion Between Phases in Various Two-Phase Flow Regimes, ANL-77-47, October 1977.

6.2-13 Spillman, J.J., Evaporation from Free Falling Droplets, Aeronautical J, 1200:5, pp 181-185, 1984.

6.2-14 General Design Criteria for Nuclear Power Plants, Title 10, Code of Federal Regulations, 10 CFR Part 50, Appendix A, January 2007 Edition.

6.2-15 U.S. Nuclear Regulatory Commission, Standard Review Plan for the Review of Safety Analysis Reports for Nuclear Power Plants, NUREG-0800, 6.2.1.3 MASS AND ENERGY RELEASE ANALYSIS FOR POSTULATED LOSS-OF-COOLANT ACCIDENTS (LOCAs), Revision 3, March 2007.

6.2-16 Small Break LOCA Methodology for US-APWR, MUAP-07013-P Rev. 2 (Proprietary) and MUAP-07013-NP Rev. 2 (Non-Proprietary), October 2010.

6.2-17 U.S. Nuclear Regulatory Commission, Standard Review Plan for the Review of Safety Analysis Reports for Nuclear Power Plants, NUREG-0800, 6.2.1.2 SUBCOMPARTMENT ANALYSIS, Revision 3, March 2007.

6.2-18 Subcompartment Analysis for US-APWR Design Confirmation, MUAP-07031-P Rev. 1 (Proprietary) and MUAP-07031-NP Rev. 1 (Non-Proprietary), October 2009.

6.2-19 Non-LOCA Methodology, MUAP-07010-P Rev. 1 (Proprietary) and MUAP-07010-NP Rev. 1 (Non-Proprietary), October 2010.

6.2-20 U.S. Nuclear Regulatory Commission, Standard Review Plan for the Review of Safety Analysis Reports for Nuclear Power Plants, NUREG-0800, Branch Technical Position 6-2, Minimum Containment Pressure Model for PWR ECCS Performance Evaluation, Revision 3, March 2007.

6.2-21 Construction Testing and Examination, Article CC-5000, ASME Code Section III, Division 2, American Society of Mechanical Engineers, 2004.

6.2-22 Structural Integrity Test of Concrete Containments, Article CC-6000, ASME Code Section III, Division 2, American Society of Mechanical Engineers, 2004.

6.2-23 U.S. Nuclear Regulatory Commission, Water Sources for Long-Term Recirculation Cooling Following a Loss-of-Coolant-Accident, Regulatory Guide 1.82, Rev. 3, November 2003.

6.2-24 Pressurized Water Reactor Sump Performance Evaluation Methodology, Nuclear Energy Institute, NEI 04-07 Volume 1 and 2, including the NRC's Safety Evaluation, December 2004. MIC-03-06-00009

6.2-25 Inservice Testing Requirements, Title 10, Code of Federal Regulations, 10 CFR 50.55a(f), Nuclear Regulator Commission, U.S., Washington, DC, January 2007.

6.2-26 U.S. Nuclear Regulator Commission, Initial Test Programs for Water-Cooled Nuclear Power Plants, Regulatory Guide 1.68, March 2007.

6.2-27 U.S. Nuclear Regulatory Commission, Standard Review Plan for the Review of Safety Analysis Reports for Nuclear Power Plants, NUREG-0800, 6.2.4 Containment Isolation System Rev. 3, March 2007.

6.2-28 Primary Reactor Containment Leakage Testing for Water-Cooled Power Reactors, Title 10 Code of Federal Regulations Part 50, Appendix J, U.S. Nuclear Regulatory Commission, January 2007 Edition.

6.2-29 U.S. Nuclear Regulatory Commission, Control of Combustible Gas Concentrations in Containment, Regulatory Guide 1.7, Rev. 3, March 2007.

6.2-30 U.S. Nuclear Regulator Commission, Performance-Based Containment Leak-Test Program, Regulatory Guide 1.163, September 1995.

6.2-31 Industry Guideline for Implementing Performance-Based Option of 10 CFR Part 50, Appendix J, Nuclear Energy Institute, NEI 94-01, July 1995.

6.2-32 Material, Article NE-2000, ASME Code Section III, Division 1, American Society of Mechanical Engineers, July 2006.

6.2-33 Material, Article CC-2000, ASME Code Section III, Division 2, American Society of Mechanical Engineers, July 2005.

6.2-34 US-APWR Sump Strainer Performance, MUAP-08001-P Rev. ~~3~~7 (Proprietary), and MUAP-08001-NP Rev. ~~3~~7 (Non-Proprietary), ~~November 2010~~August 2012. MIC-03-06-00071

6.2-35 Containment System Leakage Testing Requirements, American National Standards Institute/American Nuclear Society, ANSI/ANS-56.8-1994, August 1994.

6.2-36 US-APWR Sump Strainer Downstream Effects, MUAP-08013-P Rev. ~~1~~4 (Proprietary), and MUAP-08013-NP Rev. ~~1~~4 (Non-Proprietary), ~~January 2011~~August 2012. MIC-03-06-00071

6.2-37 US-APWR Probabilistic Risk Assessment, MUAP-07030-P Rev.1 (Proprietary), September 2008.

6.2-38 US-APWR Sump Debris Chemical Effects Test Result, MUAP-08011-P Rev.2 (Proprietary), August 2012. DCD_06.02.02-55

6.2-39 Characterization and Head-Loss Testing of Latent Debris from Pressurized Water Reactor Containment Buildings, NUREG/CR-6877, USNRC. MIC-03-06-00071 DCD_06.02.02-55

6.2-40 NRC Staff Review Guidance Regarding GL 2004-02 Closure in the Area of Strainer Head Loss and Vortexing, March 2008, USNRC, NRR.

6.2-41 Service Level I, II, and III Protective Coatings Applied to Nuclear Power Plants, Regulatory Guide 1.54 Revision 1, July, 2000, USNRC. DCD_06.02.02-55

6.2-42 Protective Coatings (Paints) for Light Water Nuclear Reactor Containment Facilities, ANSI N101.2.

6.2-43 Standard Test Method for Evaluating Coatings Used in Light-Water Nuclear Power Plants at Simulated Design Basis Accident (DBA) Conditions, ASTM D 3911.

6.2-44 WCAP-16530-NP, Topical Report "Evaluation of Post-Accident Chemical Effects on Containment Sump Fluids to Support GSI-191 (ML073521072).

6.2-45 U.S. Nuclear Regulatory Commission, Regulatory Guide 1.54, Service Level I, II, and III Protective Coatings Applied to Nuclear Power Plants, Revision 2.

6.2-46 Letter from William H. Ruland (NRR) to Alexander Marion (NEI) dated April 6, 2010, Revised Guidance regarding Coatings Zone of Influence for Review of Final Licensee Responses to Generic Letter 2004-02, Potential Impact of Debris Blockage on Emergency Recirculation during Design Basis Accidents at Pressurized Water Reactors. (ML100960495)

6.2-47 Letter from William H. Ruland (NRR) to Alexander Marion (NEI) dated July 29, 2010, Draft version of Table 3-2 for protective coating ZOIs including NEI 04-07. (ML100900172)

6.2-48 Letter from Thomas O. Martin (NRR) to J.A. Gresham (WEC) dated July 14, 2006, Nuclear Regulatory Commission Response to Westinghouse Letter LTR-NRC-06-46 regarding Pressurized Water Reactor (PWR) Containment Sump Downstream Effects. (ML062070451)

6.2-49 US-APWR Sump Strainer Stress Report, MUAP-08012-NP (R1), March 2011.

6.2-50 ASME Boiler & Pressure Vessel Code, Section III, Division 1, 2001 edition, up to and including 2003 Addenda

6.2-51 U.S. Nuclear Regulatory Commission, Standard Review Plan for the Review of Safety Analysis Reports for Nuclear Power Plants, NUREG-0800, Branch Technical Position 6-3, Determination of Bypass Leakage Paths in Dual Containment Plants, Revision 4, 2007. DCD_06.02.06-34

Table 6.2.1-1 Summary of Calculated Containment Temperature and Pressure Results for the Worst Case of Postulated Piping Failure Scenarios

Parameter	Calculated Value
Pipe Break Location and Break Type	Cold Leg (Pump Suction), Double Ended
Design Pressure, psig	68
Peak Pressure, psig	59.5
Peak Atmospheric Temperature, °F	284
Time of Peak Pressure, seconds	1781
Energy Released to Containment up to the End of Blowdown, Btu	4.76×10^8

Table 6.2.1-2 Basic Specifications of PCCV

US-APWR Specification	Value
A. PCCV	
Design Conditions	
Design Pressure [Pd]	68 psig
Test Pressure [Pt]	78.2 psig
Design External Pressure	3.9 psig
Design Temperature	300°F
Dimensions	
Inner Diameter	149 ft.- 2 in.
Inner Height	226 ft.- 5 in.
Wall Thickness [Cylinder]	4 ft.- 4 in.
Wall Thickness [Dome]	3 ft.- 8 in. 4 ft.- 4 in.
Liner Thickness	0.25 in.
Large Openings	
Equipment Hatch (1)	ID 27 ft.- 11 in.
Personnel airlocks (2)	ID 8.5 ft.
Free Volume	2.80×10^6 ft^3
Design leakage rate	0.1% air mass/24 hours
Design life	60 years
Material Properties	
Concrete Design Strength	
PCCV	7,000 psi
BASEMAT	4,000 psi
Reinforcement	ASTM A615 Gr.60
Liner plate	ASTM A516 Gr.60
Tendon Specifications	
PS System	VSL or (BBR)
Tendon Capacity	13 MN CLASS

Table 6.2.1-3 RWSP Design Features

Parameters	Value
Nominal Liquid Surface Area	4985 ft^2
Normal Liquid Volume(1) (Water volume of 96 % water level excluding water below 0% level)	~~584,000 gallons~~79,920 ft^3 (597,800 gallons)
Return Water on the Way to RWSP (During a postulated accident)	~~137,000 gallons~~16,530 ft^3 (123,700 gallons)
Ineffective Pool	~~297,000 gallons~~45,050 ft^3 (337,000 gallons)
Minimum Liquid Volume(2)	~~149,000 gallons~~18,340 ft^3 (137,200 gallons)

DCD_06.02.02-64
MIC-03-06-00070

Note:
(1) The 96% water level conservatively accounts for water gauge uncertainty
(2) Calculated post-LOCA minimum water volume in RWSP, above 0% water level (i.e., normal 0% - 96% water volume, minus return water and ineffective pools.)

Table 6.2.1-4 Initial Conditions for Maximum Containment Pressure Analytical Model

Parameters	Value	Setting for Conservatism
A. Reactor Coolant System		
1. Reactor Power Level, MWt	4,451×1.02	Max (102%)
2. Average Coolant Temperature, °F	587.8	Max
3. Mass of Reactor Coolant System Liquid, lbm	7.42×10^{5}	Max
4. Mass of Reactor Coolant System Steam, lbm	1.02×10^{4}	
5. Liquid Plus Steam Energy,* Btu	4.41×10^{8}	Max
B. Containment		
1. Pressure, psig	2 (LOCA)	Max
	0 (MSLB)	Min
2. Temperature, °F	120	Max
3. Relative Humidity, %	0	Min
4. Service Water Temperature, °F	95	Max
5. Refueling Water Temperature, °F	120	Max
6. Outside Temperature, °F	Not Considered	Thermal Insulation is Assumed.
C. Stored Water (as applicable)		
1. RWSP water volume, ft³** (gallon)	~~44,000~~43,000 (~~329,000~~322,000)	Min
2. Accumulators water volume, ft³	8.50×10^{3}	Min

DCD_06.02.01-21

Notes:
*All energies are relative to 32°F [0°C].
** This includes RWSP minimum inventory and return water, plus a safety margin, but does not include the ineffective pit volume.

Table 6.2.1-5 Engineered Safety Feature Systems Information (Sheet 1 of 2)

US APWR Specification	Value	
	Full Capacity	Value Used for Containment Design Evaluation
I. Passive Safety Injection System		
A. Number of Accumulators	4	4
B. Pressure, psig	695	586
II. Active Safety Injection Systems		
A. High Head Injection System (HHIS)		
1. Number of Lines	4	2
2. Number of Pumps	4	2
3. Flow Rate, gpm/train *	1,540	1,259
4. Response Time, sec (after analytical limit of SI signal reached)	N/A	118
III. Containment Spray System (CSS)		
A. Number of Lines	4	2
B. Number of Pumps	4	2
C. Number of Headers	1	1
D. Flow Rate, gpm	9,800 (4 pumps)	5,290 (2 pumps)
E. Response Time, sec (after analytical limit of SI signal reached)	N/A	243
IV. Refueling Water Storage Pit (RWSP)		
A. Liquid volume. Gallons	~~651,000~~93,150 ft^3 (696,800 gallons)	~~329,000~~43,000 ft^3 (322,000 gallons)
B. Liquid surface area ,ft^2	4,985	Interface Area is Ignored
V. Containment		
A. Free Volume (Air Volume), ft^3	2,800,000	2,743,000

DCD_06.02.02-64
DCD_06.02.01-21

Notes:
* HHIS flow rate is the value when RCS pressure is at 0psig.
Hot leg switch-over is conservatively not assumed, which leads to ignoring steam condensation with the hot leg injection.

Table 6.2.1-5 Engineered Safety Feature Systems Information (Sheet 2 of 2)

US APWR Specification	Value	
	Full Capacity	Value Used for Containment Design Evaluation
VI. Heat Exchangers		
1. Systems		
(1) Containment Spray Systems	-	-
(2) Component Cooling Water Systems	-	-
2. Type		
(1) Containment Spray Heat Exchanger	Tube and Shell	Tube and Shell
(2) Component Cooling System Heat Exchanger	Counter Flow	Counter Flow
3. Number		
(1) Containment Spray Heat Exchanger	4	2
(2) Component Cooling System Heat Exchanger	4	2
4. Heat Transfer Area Times Overall Heat Transfer Coefficient, Btu/hr-°F/unit		
(1) Containment Spray Heat Exchanger	More than 1.85×10^6	1.85×10^6
(2) Component Cooling System Heat Exchanger	More than 7.05×10^6	7.05×10^6
5. Flow Rate:		
(1) Containment Spray Heat Exchanger		
1. Recirculation Side, gpm/unit	More than 2,645	2,645
2. Exterior Side, gpm/unit	More than 4,162	4,162
(2) Component Cooling System Heat Exchanger		
a. Recirculation Side, gpm/unit	Less than 12,500	12,500
b. Exterior Side, gpm/unit	More than 10,000	10,000
6. Source of Cooling Water	Service Water	Service Water
7. Flow Begins after SI setpoint reached, seconds		
(1) Containment Spray Systems	N/A	243
(2) Component Cooling Water Systems	N/A	243

Table 6.2.1-6 Summary of LOCA Transients Evaluated

Break Location	Cold Leg (Pump Suction)	Cold Leg (Pump Suction)	Cold Leg (Pump Suction)	Hot Leg
Break Size and Type	C_D=1.0 Double Ended Guillotine	C_D=0.6 Double Ended Guillotine	$3ft^2$ Split	C_D=1.0 Double Ended Guillotine
Offsite Power	Lost	Lost	Lost	Lost
Assumption for Out of service*	1 Emergency Generator	1 Emergency Generator	1 Emergency Generator	N/A
Single Failure	1 Emergency Generator	1 Emergency Generator	1 Emergency Generator	N/A
Safety Injection	2 SIP Operation Minimum Safeguard	2 SIP Operation Minimum Safeguard	2 SIP Operation Minimum Safeguard	N/A
Peak Pressure, psia (psig)	74.2 (59.5)	74.0 (59.3)	74.0 (59.3)	70.7 (56.0)
Peak Atmospheric Temperature, °F	284	284	284	280
Peak RWSP Water Temperature, °F	249	250	256	-
24 hours Pressure, psia (psig)	25.8 (11.1)	25.8 (11.1)	22.3 (7.6)	Less than 50% of the Peak Calculated Pressure
Parameters vs time:				
Containment Pressure	Figure 6.2.1-18	Figure 6.2.1-21	Figure 6.2.1-24	Figure 6.2.1-27
Atmospheric Temperature	Figure 6.2.1-19	Figure 6.2.1-22	Figure 6.2.1-25	Figure 6.2.1-28
RWSP Water Temperature	Figure 6.2.1-20	Figure 6.2.1-23	Figure 6.2.1-26	Figure 6.2.1-29

* Out of service basis for the limiting conditions (maintenance or operation surveillance)

Table 6.2.1-7 Summary of Sensitivity of ECCS Conditions on the Containment Pressure and Temperature

Case	Limiting Case	HHSI Max Safeguards	Accumulator Max Water	Accumulator Max Flow
Break Location	Pump Suction	Pump Suction	Pump Suction	Pump Suction
Break Size and Type	C_D=1.0 Double Ended Guillotine	C_D=1.0 Double Ended Guillotine	C_D=1.0 Double Ended Guillotine	C_D=1.0 Double Ended Guillotine
Offsite Power	Lost	Lost	Lost	Lost
Assumption for Out of service*	1 Emergency Generator	1 Containment Heat Removal System	1 Emergency Generator	1 Emergency Generator
Single Failure	1 Emergency Generator	1 Containment Heat Removal System	1 Emergency Generator	1 Emergency Generator
Safety Injection	2 SIP Operation Minimum Safeguard	4 SIP Operation Maximum Safeguard	2 SIP Operation Minimum Safeguard	2 SIP Operation Minimum Safeguard
Accumulator Water Volume	Minimum	Minimum	Maximum	Minimum
Accumulator Pressure	Minimum	Minimum	Minimum	Maximum
Accumulator Line Resistance	Maximum	Maximum	Maximum	Minimum
Peak Pressure, psia (psig)	74.2 (59.5)	68.9 (54.2)	73.7 (59.0)	74.1 (59.4)
Peak Atmospheric Temperature, °F	284	278	284	284
Peak RWSP Water Temperature, °F	249	249	249	249
24 hours Pressure, psia (psig)	25.8 (11.1)	25.8 (11.1)	25.7 (11.0)	25.9 (11.2)
Parameters vs time:				
Containment Pressure	Figure 6.2.1-18	Figure 6.2.1-30	Figure 6.2.1-33	Figure 6.2.1-36
Atmospheric Temperature	Figure 6.2.1-19	Figure 6.2.1-31	Figure 6.2.1-34	Figure 6.2.1-37
RWSP Water Temperature	Figure 6.2.1-20	Figure 6.2.1-32	Figure 6.2.1-35	Figure 6.2.1-38

* Out of service basis for the limiting conditions (maintenance or operation surveillance)

Table 6.2.1-8 Description and Summary Results For Evaluations of Various Pipe Sizes and Break Locations for Postulated Secondary Steam System Piping Failures (includes Plant Power Levels) (Sheet 1 of 2)

Case	Case 1	Case 2	Case 3	Case 4	Case 5
Break Type	Double Ended	Double Ended	Double Ended	Double Ended	Double Ended
C_D or Area	1.0	1.0	1.0	1.0	1.0
Power Level	102%	75%	50%	25%	0%
Offsite Power	Available	Available	Available	Available	Available
Assumption for Out of service*	1 Containment Heat Removal System	1 Containment Heat Removal System	1 Containment Heat Removal System	1 Containment Heat Removal System	1 Containment Heat Removal System
Single Failure*	1 Containment Heat Removal System	1 Containment Heat Removal System	1 Containment Heat Removal System	1 Containment Heat Removal System	1 Containment Heat Removal System
Safety Injection	2 SIP Operation Minimum Safeguard	2 SIP Operation Minimum Safeguard	2 SIP Operation Minimum Safeguard	2 SIP Operation Minimum Safeguard	2 SIP Operation Minimum Safeguard
Peak Pressure, psia (psig)	62.9 (48.2)	61.5 (46.8)	61.3 (46.7)	61.9 (47.2)	63.5 (48.8)
Peak Atmospheric Temperature, °F	355	350	348	349	347
24 hours Pressure, psia (psig)	15.4 (0.7)	15.4 (0.7)	15.4 (0.7)	15.4 (0.7)	15.4 (0.7)
Parameters vs time:					
Containment Pressure	Figure 6.2.1-39	Figure 6.2.1-42	Figure 6.2.1-45	Figure 6.2.1-48	Figure 6.2.1-51
Atmospheric Temperature	Figure 6.2.1-40	Figure 6.2.1-43	Figure 6.2.1-46	Figure 6.2.1-49	Figure 6.2.1-52
RWSP Water Temperature	Figure 6.2.1-41	Figure 6.2.1-44	Figure 6.2.1-47	Figure 6.2.1-50	Figure 6.2.1-53

* Conditions for the single failure and out of service are independently assumed for the containment analysis and the mass and energy analysis. Conditions for the containment analyses are described above.

Table 6.2.1-8 Description and Summary Results For Evaluations of Various Pipe Sizes and Break Locations for Postulated Secondary Steam System Piping Failures (includes Plant Power Levels) (Sheet 2 of 2)

Case	Case 6	Case 7	Case 8	Case 9
Break Type	Split	Split	Double Ended	Double Ended
C_D or Area	1.65 ft^2	1.71 ft^2	1.0	1.0
Power Level	102%	0%	102%	0%
Offsite Power	Available	Available	Lost	Lost
Assumption for Out of service*	1 Containment Heat Removal System	1 Containment Heat Removal System	1 Containment Heat Removal System	1 Containment Heat Removal System
Single Failure	1 Containment Heat Removal System	1 Containment Heat Removal System	1 Containment Heat Removal System	1 Containment Heat Removal System
Safety Injection	2 SIP Operation Minimum Safeguard	2 SIP Operation Minimum Safeguard	2 SIP Operation Minimum Safeguard	2 SIP Operation Minimum Safeguard
Peak Pressure, psia (psig)	61.8 (47.1)	61.9 (47.2)	55.6 (40.9)	53.2 (38.5)
Peak Atmospheric Temperature, °F	328	325	355	347
24 hours Pressure, psia (psig)	15.4 (0.7)	15.4 (0.7)	15.4 (0.7)	15.4 (0.7)
Parameters vs time:				
Containment Pressure	Figure 6.2.1-54	Figure 6.2.1-57	Figure 6.2.1-60	Figure 6.2.1-63
Atmospheric Temperature	Figure 6.2.1-55	Figure 6.2.1-58	Figure 6.2.1-61	Figure 6.2.1-64
RWSP Water Temperature	Figure 6.2.1-56	Figure 6.2.1-59	Figure 6.2.1-62	Figure 6.2.1-65

* Conditions for the single failure and out of service are independently assumed for the containment analysis and the mass and energy analysis. Conditions for the containment analyses are described above.

Table 6.2.1-9 Passive Heat Sinks used in Maximum Pressure Containment Analyses (Sheet 1 of 2)

Passive Heat Sinks	Heat Transfer Area (ft^2)	Material	Thickness (in)
(1) Containment Dome	33,213	Coating Carbon Steel Air Gap Concrete	0.0118 0.257 0.02 44.1
(2) Containment Cylinder	56,558	Coating Carbon Steel Air Gap Concrete	0.0118 0.425 0.02 52.0
(3) Thick Concrete - Internal Separation Walls, Connection Path, Containment Drain Pump Room	12,971	Coating Concrete	0.0394 14.9
(4) Thin Concrete - Internal Separation Walls, Letdown Hx Rooms, Regenerative Hx Rooms	14,579	Coating Concrete	0.0394 7.35
(5) Lined Concrete (Stainless Steel) - Web Plate, Reactor Vessel Cavity Walls	6,303	Stainless Steel Carbon Steel Air Gap Concrete	0.118 0.472 0.02 22.7
(6) Lined Concrete (Carbon Steel, Thick) - Primary Shield Walls, Secondary Shield Walls, Containment Drain Tank Rooms, Pressurizer Room, Missile Shield, Deck Plates, Reactor Vessel Lower Cavity Walls, SG Compartment	67,981	Coating Carbon Steel Air Gap Concrete	0.0118 0.574 0.02 20.2
(7) Lined Concrete (Carbon Steel, Thin) - Deck Plates	107	Coating Carbon Steel Air Gap Concrete	0.0118 0.311 0.02 7.99
(8) Internal Structure (Carbon Steel Thickness greater equals 2-inch) - Equipment Hatch, Air Lock, Accumulator Tanks, SG Supports, Level Switch	7,815	Coating Carbon Steel	0.0118 3.17
(9) Internal Structure (Carbon Steel Thickness between 2-inch and 1.2-inch) - Vents, Reactor Vessel Supports, Polar Crane, RCP Lower Bracket, RCP Supports	18,790	Coating Carbon Steel	0.0118 1.52
(10) Internal Structure (Carbon Steel Thickness between 1.2-inch and 0.4-inch) - Air Lock, Accumulator Column Supports, Excess Letdown Hx, Manipulator Crane Rail, Refueling Machine, Piping Supports, Covering Steel, Ring Guarder, Vent, NIS Electrical Horn, ITV Instruments, SG Supports, Pressurizer Supports, RCP Upper Bracket, RCP Flame, Let Down Hx	122,288	Coating Carbon Steel	0.0118 0.468

Table 6.2.1-9 Passive Heat Sinks used in Maximum Pressure Containment Analyses (Sheet 2 of 2)

Passive Heat Sinks	Heat Transfer Area (ft^2)	Material	Thickness (in)
(11) Internal Structure (Carbon Steel Thickness between 0.4-inch and 0.08-inch) - Containment Drain Tank Column Supports, Excess Letdown Hx Column Supports, Refueling Crane, Duct Supports, Duct Connection Flanges, HAVC Units, Fans, Connecting Box, I/C Piping Supports, Cable Tubes, Penetration Boxes, Electrical Boards, Trans, Motor, Luminaries, I/C Supports, Electrical Boxes, I/C Rack, Stairways, RCP Duct, RCP Air Cooler, RCP Flywheel Cover, NIS Source Range Detector, Generative Hx Support	225,084	Coating Carbon Steel	0.0118 0.234
(12) Internal Structure (Carbon Steel Thickness less than 0.08-inch) - Gratings, Ducts, Fans, HAVC Units, ICIS Boxes, Cable Trays, Duct Connecting Flanges, I/C Devices, ITV Instruments, NIS Air Horn	168,724	Coating Carbon Steel	0.0118 0.0504
(13) Internal Structure (Stainless Steel) - Containment Drain Tank, RCP Purged Water Tank, Refueling Machine, Refueling Crane, RMS Indicators, ICIS Instruments, DRPI Tube, Transmitters, Level Switch, Luminaries, Temporary Fuel Rack	5,914	Stainless Steel	0.176
(14) Copper - Coils, Copper Tubes, Luminaries, Cooling Coil's Fins	166,862	Copper	0.008
(15) Uninsulated Cold-Water-Filled Piping (Stainless Steel)	8,749	Stainless Steel	0.323
(16) Empty Piping (Stainless Steel)	654	Stainless Steel	0.126
(17) Uninsulated Cold-Water-Filled Piping (Carbon Steel)	441	Coating Carbon Steel	0.0118 0.197
(18) Empty Piping (Carbon Steel)	596	Coating Carbon Steel	0.0118 0.138
(19) Aluminum - NIS Power Range Detector	29	Aluminum	0.118

Table 6.2.1-10 Passive Heat Sinks Material Properties

Material	Density, lb/ft^3	Specific Heat, Btu/lb-°F	Thermal Conductivity, Btu/hr-ft-°F
Paint	115	0.26	0.17
Carbon Steel	490	0.12	26
Stainless Steel	494	0.12	9.2
Concrete	145	0.16	0.8
Copper	558	0.1	205
Aluminum	169	0.22	128
Air	0.07	0.24	0.02

Table 6.2.1-11 Selected Key Events for the Worst-Case Postulated DEPSG Break

Event	Time, seconds
Beginning of the Accumulator Injection (Broken Loop)	22.6
Beginning of the Accumulator Injection (Intact Loop)	22.9
End of Blowdown/Beginning of Reflood	31.6
Beginning of the Accumulator Small Flow Injection (Broken Loop)	84.8
Beginning of the Accumulator Small Flow Injection (Intact Loop)	84.8
Beginning of the Safety Injection	121.0
Beginning of the Containment Spray	246.0
End of the Core Reflood	263.8
Peak Pressure (End of Steam Generator Energy Release)	1,781
Accumulator Emptied (Intact Loop)	2,540
Accumulator Emptied (Broken Loop)	2,562
Time of Depressurization of the Containment at 50 Percent of Peak Pressure	14,910

Table 6.2.1-12 Distribution of Energy at Selected Locations within Containment for the Worst-Case Postulated DEPSG Break

Energy Unit : Million Btu

	Phase	Prior to LOCA	End of Blowdown	End of Core Reflood	At Peak Pressure	1 Day into Recirc.
	Time (seconds)	0	31.6	263.8	1781	86400
Initial Energy		1287.54	1287.54	1287.54	1287.54	1287.54
Added Energy	Energy Generated during Shutdown from Decay Heat	0.00	15.59	49.61	197.82	3243.76
	Heat from Secondary	0.00	26.03	26.03	26.03	26.03
Total Available	(Initial Energy + Added)	1287.54	1329.16	1363.18	1511.39	4557.33
RCS Energy Distribution	Reactor Coolant Internal Energy	441.38	17.13	58.34	75.93	69.07
	Accumulator Internal Energy	47.09	41.25	8.45	1.73	0.00
	Energy Stored in Core	43.45	23.10	7.59	8.14	6.06
	Energy Stored in RCS Structure	267.87	255.87	206.23	164.78	122.43
	Steam Generator Coolant Internal Energy	349.58	379.25	319.45	200.48	156.63
	Energy Stored in Steam Generator Metal	138.16	136.48	117.31	91.77	66.79
RCS Total Contents		1287.54	853.07	717.38	542.83	420.98
Total Energy Released from RCS to Containment (Total Available - RCS Total Contents)		0.00	476.09	645.80	968.56	4136.35
Containment Energy Distribution	Energy Content of Containment Atmosphere	0.00	405.05	331.92	367.71	48.62
	Energy Content of RWSP Water	238.85	263.15	387.79	559.33	531.05
	Energy Content of Containment and Internal Structures	0.00	38.89	156.61	262.95	388.46
	Energy Removed by RHR Coolers	0.00	0.00	0.31	43.36	3436.20
Total Energy Received from RCS		0.00	468.24	637.78	994.49	4165.47

Table 6.2.1-13 Selected Key Events for the Worst-Case Postulated DEHLG Break

Events	Time, seconds
Beginning of the Accumulator Injection (Broken Loop)	17.1
Beginning of the Accumulator Injection (Intact Loop)	17.2
Peak Containment Pressure during the Blowdown Phase	24.0
End of Blowdown	27.0

Table 6.2.1-14 Distribution of Energy at Selected Locations within Containment for the Worst-Case Postulated DEHLG Break

Energy Unit : Million Btu

	Phase	Prior to LOCA	End of Blowdown
	Time(seconds)	0	27.0
Initial Energy		1287.54	1287.54
Added Energy	Energy Generated during Shutdown from Decay Heat	0.00	14.28
	Heat from Secondary	0.00	21.65
Total Available	(Initial Energy + Added)	1287.54	1323.46
RCS Energy Distribution	Reactor Coolant Internal Energy	441.38	23.66
	Accumulator Internal Energy	47.09	40.36
	Energy Stored in Core	43.45	17.72
	Energy Stored in RCS Structure	267.87	251.95
	Steam Generator Coolant Internal Energy	349.58	365.41
	Energy Stored in Steam Generator Metal	138.16	133.23
RCS Total Contents		1287.54	832.33
Total Energy Released from RCS to Containment (Total Available - RCS Total Contents)		0.00	491.13
Containment Energy Distribution	Energy Content of Containment Atmosphere	0.00	424.47
	Energy Content of RWSP Water	238.85	260.54
	Energy Content of Containment and Internal Structures	0.00	37.10
	Energy Removed by RHR Coolers	0.00	0.00
Total Energy Received from RCS		0.00	483.27

Table 6.2.1-15 Selected Key Events for the Secondary Steam System Piping Failure Transient Case 5 - Highest Containment Pressure

Event	Time, seconds
Steam Pipe Rupture Occurs	0.0
Low Steamline Pressure Analysis Limit Reached	1.5
High Containment Pressure setpoint reached	1.8
High-High Containment Pressure setpoint reached	6.9
Main steam isolation valves closed	10.0
Main feedwater isolation complete	10.0
Peak Temperature	10.0
Automatic Isolation of EFW to Faulted SG	62.9
High-3 Containment Pressure setpoint reached	133
Containment Spray start	251
Faulted SG Water Mass Depleted	404
Peak Pressure	404

Table 6.2.1-16 Selected Key Events for the Secondary Steam System Piping Failure Transient Case 1 - Highest Containment Temperature

Event	Time, seconds
Steam Pipe Rupture Occurs	0.0
High Containment Pressure setpoint reached	2.1
Low Steamline Pressure Analysis Limit Reached	2.5
High-High Containment Pressure setpoint reached	8.2
Main steam isolation valves closed	11.0
Main feedwater isolation complete	11.0
Peak Temperature	11.0
Automatic Isolation of EFW to Faulted SG	68.7
High-3 Containment Pressure setpoint reached	90.6
Faulted SG Water Mass Depleted	192
Peak Pressure	194
Containment Spray start	209

Table 6.2.1-17 Subcompartment and Postulated Break Line condition (Sheet 1 of 2)

Subcompartment	Break Line	Line Spec	Press. psi	Temp. °F	fluid	Results of LBB Evaluation
Steam Generator Subcompartment	Main Coolant Pipe-Hot Leg	31”ID-RCS-2501	2235	617.0	Subcooled Water	Leak
	Main Coolant Pipe-Cold Leg	31”ID-RCS-2501	2235	550.6	Subcooled Water	Leak
	Main Coolant Pipe-Cross-over Leg	31”ID-RCS-2501	2235	550.6	Subcooled Water	Leak
	Pressurizer Surge Line	16”-RColmS-2501	2235	653.0	Saturated Water	Leak
	Accumulator Injection Line	14”-RCS-2501	2235	550.6	Subcooled Water	Leak
		14”-SIS-2501	2235	550.6	Subcooled Water	Leak
		14”-SIS-2511	2235	120.0	Subcooled Water	Leak
	RHR Pump Inlet Line	10”-RCS-2501	2235	617.0	Subcooled Water	Break
	RHR Pump Outlet Line	8”-RCS-2501	2235	550.6	Subcooled Water	Break
	Direct Vessel Injection Line	4”-RCS-2501	2235	550.6	Subcooled Water	Break
	SI High Head Injection Line	4”-RCS-2501	2235	617.0	Subcooled Water	Break
	SI Emergency Letdown Line	2”-RCS-2501	2235	617.0	Subcooled Water	Break
	Pressurizer Spray Line	6”-RCS-2501	2235	550.6	Subcooled Water	Break
	Loop Drain Line	2”-RCS-2501	2235	550.6	Subcooled Water	Break
	Charging Line	4”-RC-2501	2235	550.6	Subcooled Water	Break
		4”-CVS-2501	2235	550.6	Subcooled Water	Break
		4”-CVS-2561	2235	464.0	Subcooled Water	Break
	Letdown Line	3”-RCS-2501	2235	550.6	Subcooled Water	Break
		3”-CVS-2501	2235	550.6	Subcooled Water	Break
		3”-CVS-2561	2235	550.6	Subcooled Water	Break
		3”-CVS-0601	350	269.1	Subcooled Water	Break
		4”-CVS-0601	350	115.0	Subcooled Water	Break
	RCP Seal Water Injection Line	1-1/2”-CVS-2501	2600	130.0	Subcooled Water	Break
		1-1/2”-CVS-2511	2600	130.0	Subcooled Water	Break
	Feedwater Line	16”-FWS-1525	1185	568.0	Saturated Water	Break
	Main Steam Line	32”-MSS-1532	907	535.0	Steam	Leak
	SG Blowdown Line	3”-SGS-1532	907	535.0	Steam	Break
		4”-SGS-1532	907	535.0	Steam	Break

Table 6.2.1-17 Subcompartment and Postulated Break Line condition (Sheet 2 of 2)

Subcompartment	Break Line	Line Spec	Press. psi	Temp. °F	fluid	Results of LBB Evaluation
Subcompartment under Pressurizer Subcompartment	Pressurizer Surge Line	16”-RCS-2501	2235	653.0	Saturated Water	Leak
Pressurizer Subcompartment	Pressurizer Spray Line	6”-RCS-2501	2235	550.6	Subcooled Water	Break
	Pressurizer Auxiliary Spray Line	3”-RCS-2501	2235	550.6	Subcooled Water	Break
	Pressurizer Safety Valve Inlet Line	6”-RCS-2501	2235	653.0	Steam	Break
	Pressurizer Safety Depressurization Line	8”-RCS-2501	2235	653.0	Steam	Break
		6”-RCS-2501	2235	653.0	Steam	Break
		4”-RCS-2501	2235	653.0	Steam	Break
Pressurizer spray valve room	Pressurizer Spray Line	6”-RCS-2501	2235	550.6	Subcooled Water	No Break
Reactor Cavity	Direct Vessel Injection Line	4”-RCS-2501	2235	554.6	Subcooled Water	Break
Regenerative heat exchanger room	Charging Line	4”-CVS-2511	2600	130.0	Subcooled Water	Break
		4”-CVS-2561	2266	554.6	Subcooled Water	Break
	Letdown Line	3”-CVS-2561	2266	554.6	Subcooled Water	Break
Regenerative heat exchanger valve room	Charging Line	4”-CVS-2561	2366	554.6	Subcooled Water	Break
	Letdown Line	3”-CVS-2561	2266	380	Subcooled Water	Break
		3”-CVS-0601	350	380	Subcooled Water	Break
Letdown heat exchanger room	Letdown Line	4”-CVS-0601	350	380	Subcooled Water	Break

Table 6.2.1-18 Break Mass and Energy Flow for the Blowdown Phase of the DEPSG Break (Sheet 1 of 4)

Time (sec)	Break Flow (Reactor Vessel Side)		Break Flow (Steam Generator Side)	
	Mass (lbm/sec)	Enthalpy (Btu/lbm)	Mass (lbm/sec)	Enthalpy (Btu/lbm)
0.0	0.0	0.0	0.0	0.0
0.0003370	39367.7	551.1	47451.3	553.0
0.00102	39475.9	548.5	101757.9	550.6
0.0112	39130.1	548.1	42091.4	548.5
0.0211	36128.7	547.7	41741.5	548.6
0.0515	23343.8	545.7	41730.0	548.8
0.0611	21272.1	546.1	41772.5	549.0
0.0711	20482.9	546.9	49613.7	549.3
0.0912	20875.8	547.9	49573.9	549.5
0.111	21872.9	548.2	52298.0	549.9
0.161	23599.5	548.5	53529.7	550.8
0.222	24642.7	548.5	53292.9	552.1
0.301	25143.0	548.8	52771.2	554.1
0.351	25174.2	549.0	52247.1	555.6
0.461	24771.8	549.4	51320.8	559.1
0.612	23850.0	549.8	49654.5	564.7
0.722	23282.3	550.0	48528.0	569.1
0.892	22592.6	550.2	45170.0	575.5
0.942	22379.0	550.2	45327.6	577.1
1.10	21759.3	550.3	45295.7	581.9
1.22	21421.2	550.4	44966.5	585.2
1.38	21098.6	550.4	44252.4	589.5
1.79	20504.6	550.6	42629.5	602.0
2.19	20145.6	550.7	40986.6	615.8
2.36	19968.7	550.7	40050.1	622.6
2.60	19770.8	550.8	38391.9	633.9
2.78	19529.0	550.9	36838.1	643.7
3.05	19203.1	551.0	34109.2	660.1
3.21	18997.5	551.1	32571.4	670.4
3.36	18761.9	551.2	30763.6	679.9
3.47	18595.1	551.3	28587.1	686.7
3.60	18413.9	551.4	26455.0	695.1

Table 6.2.1-18 Break Mass and Energy Flow for the Blowdown Phase of the DEPSG Break (Sheet 2 of 4)

Time (sec)	Break Flow (Reactor Vessel Side)		Break Flow (Steam Generator Side)	
	Mass (lbm/sec)	Enthalpy (Btu/lbm)	Mass (lbm/sec)	Enthalpy (Btu/lbm)
3.76	18206.1	551.6	24304.9	704.4
3.87	18061.6	551.7	22991.5	709.6
4.12	17754.4	551.9	20628.8	719.7
4.30	17572.2	552.2	19402.4	726.2
4.52	17340.0	552.5	18253.8	732.8
4.70	17169.7	552.7	17495.8	737.4
5.04	16875.9	553.2	16433.3	744.0
5.28	16689.0	553.6	15858.1	747.1
5.56	16481.5	554.1	15364.8	748.9
5.90	16257.4	554.6	14911.8	749.2
6.32	15998.5	555.4	14544.8	746.8
6.70	15785.4	556.1	14359.4	743.0
7.24	15524.1	557.1	14255.9	735.5
7.64	15343.8	557.9	14296.7	728.8
7.98	15208.3	558.6	14488.5	722.1
8.02	15199.0	558.7	14731.1	721.6
8.26	15131.0	559.1	15033.9	716.6
8.40	16026.5	559.7	15021.8	723.1
8.48	16087.8	559.7	14751.8	733.2
8.70	16062.8	560.0	13335.8	776.1
8.82	15976.5	560.2	12691.5	794.8
8.96	15836.1	560.5	12286.4	805.4
9.22	15554.1	560.8	12087.8	807.2
9.80	14792.9	561.7	11987.9	802.5
10.6	14024.3	562.6	11586.8	805.6
11.1	13789.1	562.8	11341.6	809.2
11.4	13611.3	562.6	11266.0	804.9
11.6	13489.1	562.5	11359.6	793.7
12.5	13090.5	562.0	12033.3	748.7
12.9	12901.3	561.8	12224.2	733.1
13.4	12709.5	561.7	12165.6	723.8
13.8	12572.8	561.6	11966.0	721.6

Table 6.2.1-18 Break Mass and Energy Flow for the Blowdown Phase of the DEPSG Break (Sheet 3 of 4)

Time (sec)	Break Flow (Reactor Vessel Side)		Break Flow (Steam Generator Side)	
	Mass (lbm/sec)	Enthalpy (Btu/lbm)	Mass (lbm/sec)	Enthalpy (Btu/lbm)
15.0	12145.3	561.7	10933.2	733.2
16.3	11582.4	562.0	9871.6	758.1
16.7	11368.6	562.1	9506.5	768.5
17.5	10985.2	562.6	8932.6	784.5
18.1	10639.8	563.2	8496.3	793.2
19.3	10084.5	564.6	7923.1	798.5
20.3	9525.1	567.2	7376.3	803.5
20.6	9398.9	568.1	7252.5	804.4
21.7	8754.1	573.0	6770.4	811.7
22.0	8456.5	575.0	6592.1	817.4
22.2	8405.0	576.1	6485.0	821.9
22.3	8194.6	575.8	6363.4	826.8
22.5	8122.6	576.2	6199.1	834.7
23.2	7511.7	565.4	5537.7	857.3
23.6	7395.6	545.6	5358.8	856.1
23.8	7156.2	530.6	5343.5	860.3
24.1	6830.6	512.7	5063.8	908.6
24.6	6092.3	484.0	3926.3	1105.9
24.9	5713.7	471.7	3406.3	1198.1
25.2	5303.5	456.0	2945.3	1233.7
25.5	4952.7	444.2	2670.1	1240.3
26.0	4481.7	427.7	2351.4	1247.1
26.3	3940.1	418.7	2192.7	1250.1
26.6	3702.1	409.8	2077.3	1251.8
26.7	3673.5	402.9	1971.8	1253.3
27.1	3875.5	388.2	1742.8	1257.0
27.3	3863.8	384.2	1646.1	1258.4
27.8	3532.0	374.1	1401.5	1262.1
28.3	3024.7	357.1	1099.6	1266.3
28.9	2602.4	339.3	801.5	1269.1
29.2	2380.8	328.4	678.4	1270.3
29.4	2032.8	320.4	614.2	1271.3

Table 6.2.1-18 Break Mass and Energy Flow for the Blowdown Phase of the DEPSG Break (Sheet 4 of 4)

Time (sec)	Break Flow (Reactor Vessel Side)		Break Flow (Steam Generator Side)	
	Mass (lbm/sec)	Enthalpy (Btu/lbm)	Mass (lbm/sec)	Enthalpy (Btu/lbm)
29.7	1421.6	312.0	540.4	1272.2
30.2	0.0	0.0	417.4	1273.4
30.5	0.0	0.0	335.2	1274.2
31.6	0.0	0.0	0.0	0.0

Table 6.2.1-19 Break Mass and Energy Flow for the Blowdown Phase of the DEHLG Break (Sheet 1 of 3)

Time (sec)	Break Flow (Reactor Vessel Side)		Break Flow (Steam Generator Side)	
	Mass (lbm/sec)	Enthalpy (Btu/lbm)	Mass (lbm/sec)	Enthalpy (Btu/lbm)
0.0	0.0	0.0	0.0	0.0
0.000382	29413.6	642.1	29416.9	642.1
0.00108	53209.4	640.8	53208.5	640.8
0.0113	51654.5	641.0	45827.2	641.3
0.0213	53072.8	640.9	38955.8	643.7
0.0315	62620.5	640.2	34049.7	647.6
0.0411	61665.1	639.1	31926.0	651.1
0.0713	58628.1	636.0	31916.4	654.9
0.0813	58489.5	635.1	32032.7	655.3
0.102	53909.5	633.2	32202.3	656.0
0.141	52270.2	630.8	31857.7	657.0
0.171	52769.8	629.6	31602.1	657.6
0.211	51843.4	628.1	30657.1	658.3
0.282	51188.9	626.7	28173.6	659.6
0.331	50572.5	625.9	27140.4	659.8
0.391	49786.5	625.4	26272.5	659.4
0.542	48501.0	624.7	24783.2	656.4
0.731	47830.0	625.8	23737.0	650.8
0.822	47214.4	627.7	23352.0	648.2
0.912	46186.8	630.3	23098.2	645.7
1.05	44450.0	635.8	22766.9	642.3
1.14	43667.8	640.0	22553.9	640.2
1.33	42417.5	647.9	22256.7	636.4
1.47	41257.5	653.4	22125.9	633.8
1.78	38065.2	665.2	21905.1	628.8
2.05	35919.4	676.0	21797.7	625.1
2.34	33421.4	686.2	21725.8	621.3
2.53	32003.6	691.9	21721.6	619.1
2.92	29681.9	700.4	21760.2	614.5
3.04	29065.7	701.5	21770.6	613.2
3.22	28349.5	701.9	21775.7	611.2
3.38	27893.9	701.2	21773.9	609.5
3.63	27427.0	698.4	21761.4	606.9
3.81	27239.1	695.5	21757.1	605.1

Table 6.2.1-19 Break Mass and Energy Flow for the Blowdown Phase of the DEHLG Break (Sheet 2 of 3)

Time (sec)	Break Flow (Reactor Vessel Side)		Break Flow (Steam Generator Side)	
	Mass (lbm/sec)	Enthalpy (Btu/lbm)	Mass (lbm/sec)	Enthalpy (Btu/lbm)
4.10	27144.7	689.9	21719.7	602.3
4.36	27226.6	684.4	21667.2	599.7
4.56	27177.9	681.3	21620.3	597.8
4.92	26897.8	678.7	21527.4	594.1
5.18	26812.2	676.2	21465.1	591.3
5.60	26900.3	670.1	21483.0	585.8
5.98	27129.5	663.8	21568.1	578.5
6.12	27250.0	661.1	21379.3	578.1
6.14	27267.0	660.7	16998.4	641.7
6.16	27285.2	660.3	15392.7	647.1
6.24	27356.1	658.8	15173.3	648.1
6.34	27443.4	656.9	15237.9	644.8
6.48	27560.6	654.3	14956.2	642.0
6.76	27744.7	649.9	14702.9	642.9
6.92	27797.3	647.8	14405.5	641.0
7.20	27816.7	644.8	14032.6	638.2
7.42	27777.4	643.0	13809.7	637.4
7.72	27662.5	641.1	13298.5	637.5
8.08	27446.1	639.4	12577.9	640.6
8.38	27218.2	638.3	12049.6	641.1
8.86	26789.8	636.9	11029.9	654.0
8.94	26715.1	636.7	10644.8	657.4
9.10	26553.1	636.3	10411.2	657.5
9.72	25870.6	635.2	9393.3	661.9
10.1	25457.9	634.9	8881.6	665.4
10.6	24804.6	634.6	8219.7	671.2
11.1	24060.6	634.8	7633.9	677.4
11.5	23390.9	635.4	7215.3	682.3
12.1	22453.8	636.8	6735.7	688.3
12.6	21758.5	638.2	6437.9	692.2
13.2	20644.0	641.6	6042.0	697.7
13.7	19911.2	644.5	5824.8	701.1
14.3	18682.8	650.8	5512.1	706.9
14.9	17568.0	658.0	5265.7	712.5

Table 6.2.1-19 Break Mass and Energy Flow for the Blowdown Phase of the DEHLG Break (Sheet 3 of 3)

Time (sec)	Break Flow (Reactor Vessel Side)		Break Flow (Steam Generator Side)	
	Mass (lbm/sec)	Enthalpy (Btu/lbm)	Mass (lbm/sec)	Enthalpy (Btu/lbm)
15.6	16087.7	670.3	4973.8	720.0
16.3	14608.9	686.6	4703.1	731.3
16.9	13250.0	706.6	4472.3	742.7
17.2	12684.4	722.6	4367.8	747.9
17.3	11099.7	775.3	4331.4	750.5
17.4	10367.6	805.0	4294.6	752.2
17.6	9458.3	846.6	4230.0	755.8
17.9	8328.3	898.1	4103.7	763.0
18.1	7859.9	902.9	3987.6	770.3
18.5	6978.2	934.3	3765.5	789.0
18.8	6174.0	974.7	3523.1	816.7
19.0	5581.0	1011.6	3295.9	848.7
19.3	4764.3	1077.0	2910.3	917.1
19.6	4243.0	1131.0	2611.8	985.1
19.8	3920.7	1165.7	2396.9	1043.4
20.2	3536.2	1193.8	2032.1	1154.1
20.5	3254.1	1203.3	1807.9	1209.1
20.9	2902.3	1215.0	1651.1	1229.6
21.4	2454.6	1234.7	1511.5	1237.9
21.6	2220.0	1245.7	1440.6	1241.4
22.0	2006.9	1254.8	1334.2	1245.9
22.6	1662.7	1271.0	1222.0	1249.4
22.9	1501.2	1273.6	1134.2	1250.8
23.4	1271.0	1277.7	921.2	1256.5
23.7	1056.2	1280.3	844.0	1258.6
24.1	819.6	1282.1	616.0	1264.3
24.9	597.8	1280.7	289.2	1280.2
25.0	615.7	1282.1	233.4	1285.1
25.5	530.8	1281.0	204.8	1289.5
26.1	414.9	1279.6	0.0	0.0
26.7	151.7	1287.3	0.0	0.0
27.0	0.0	0.0	0.0	0.0

Table 6.2.1-20 Break Mass and Energy Flow for the Reflood Phase of the DEPSG Break (Sheet 1 of 3)

Time (sec)	Break Flow (Reactor Vessel Side)		Break Flow (Steam Generator Side)	
	Mass (lbm/sec)	Enthalpy (Btu/lbm)	Mass (lbm/sec)	Enthalpy (Btu/lbm)
31.6	0.0	0.0	0.0	0.0
32.9	0.0	0.0	0.0	0.0
33.0	0.0	0.0	49.2	1179.3
33.1	0.0	0.0	17.0	1179.3
33.2	0.0	0.0	2.7	1179.3
33.4	0.0	0.0	0.0	0.0
33.5	0.0	0.0	21.6	1179.3
33.6	0.0	0.0	31.5	1179.3
33.7	0.0	0.0	35.3	1179.3
33.8	0.0	0.0	46.0	1179.3
33.9	0.0	0.0	52.3	1179.4
35.7	0.0	0.0	115.5	1179.6
36.7	0.0	0.0	140.4	1179.8
37.7	0.0	0.0	161.6	1179.9
38.7	0.0	0.0	180.4	1180.1
39.7	0.0	0.0	197.2	1180.2
40.7	0.0	0.0	212.6	1180.3
41.8	3737.6	158.3	444.9	1183.5
42.8	4173.3	166.4	496.0	1184.8
43.8	4142.5	167.4	492.1	1184.7
44.8	4090.6	168.1	485.9	1184.6
45.8	4036.6	168.7	479.4	1184.4
46.0	4025.7	168.9	478.1	1184.4
46.8	3982.2	169.4	473.0	1184.3
47.8	3928.2	170.0	466.7	1184.2
48.8	3874.9	170.6	460.6	1184.0
49.8	3822.5	171.3	454.6	1183.9
50.8	3771.1	171.9	448.7	1183.8
51.8	3720.8	172.5	443.0	1183.7
52.8	3671.7	173.1	437.5	1183.6
53.1	3657.2	173.3	435.9	1183.5
53.8	3623.7	173.7	432.2	1183.4
54.8	3576.9	174.3	427.0	1183.3
55.8	3531.2	174.9	422.0	1183.2

Table 6.2.1-20 Break Mass and Energy Flow for the Reflood Phase of the DEPSG Break (Sheet 2 of 3)

Time (sec)	Break Flow (Reactor Vessel Side)		Break Flow (Steam Generator Side)	
	Mass (lbm/sec)	Enthalpy (Btu/lbm)	Mass (lbm/sec)	Enthalpy (Btu/lbm)
56.8	3486.7	175.4	417.1	1183.1
57.8	3443.2	176.0	412.3	1183.0
58.8	3400.7	176.6	407.8	1182.9
59.8	3359.3	177.2	403.3	1182.8
60.8	3318.8	177.8	399.0	1182.7
61.2	3302.9	178.0	397.3	1182.7
61.8	3279.3	178.3	394.7	1182.6
62.8	3240.7	178.9	390.7	1182.5
63.8	3202.9	179.5	386.7	1182.5
64.8	3166.0	180.1	382.8	1182.4
65.8	3130.0	180.6	379.0	1182.3
66.8	3094.7	181.2	375.4	1182.2
67.8	3060.2	181.7	371.8	1182.1
68.8	3026.4	182.3	368.3	1182.1
69.8	2993.3	182.9	364.9	1182.0
70.1	2983.5	183.0	363.9	1182.0
70.8	2960.8	183.4	361.6	1181.9
71.8	2929.1	184.0	358.4	1181.8
72.8	2898.0	184.5	355.2	1181.8
73.8	2867.4	185.1	352.2	1181.7
74.8	2837.5	185.7	349.2	1181.6
75.8	2808.1	186.2	346.2	1181.6
77.8	2751.0	187.3	340.6	1181.4
79.8	2696.0	188.4	335.2	1181.3
81.8	2642.9	189.5	330.0	1181.2
83.8	2591.6	190.6	325.0	1181.1
84.9	2124.6	206.1	287.6	1180.4
85.9	185.1	1083.1	402.7	1182.4
91.9	181.8	1092.7	398.5	1182.3
92.9	181.3	1094.3	397.8	1182.3
100.9	177.0	1108.0	392.5	1182.2
108.7	173.1	1120.4	387.6	1182.1
108.9	173.0	1120.7	387.4	1182.1
116.9	169.4	1131.9	382.4	1182.0

Table 6.2.1-20 Break Mass and Energy Flow for the Reflood Phase of the DEPSG Break (Sheet 3 of 3)

Time (sec)	Break Flow (Reactor Vessel Side)		Break Flow (Steam Generator Side)	
	Mass (lbm/sec)	Enthalpy (Btu/lbm)	Mass (lbm/sec)	Enthalpy (Btu/lbm)
120.9	167.7	1136.9	379.8	1182.0
122.9	250.5	964.0	480.4	1183.9
124.9	249.5	965.7	479.4	1183.9
128.9	247.7	968.2	477.1	1183.9
132.9	246.1	969.8	474.8	1183.8
140.9	243.3	970.1	469.8	1183.8
148.9	241.0	967.5	464.5	1183.7
149.3	240.9	967.3	464.3	1183.7
156.9	239.2	962.7	459.0	1183.7
164.9	237.6	956.5	453.3	1183.6
180.9	234.6	942.8	441.7	1183.5
188.9	233.0	936.2	435.9	1183.5
192.9	232.2	933.1	433.0	1183.4
194.9	231.8	931.6	431.6	1183.4
210.9	228.1	921.4	420.0	1183.4
214.9	227.0	919.5	417.2	1183.3
216.9	226.5	918.6	415.8	1183.3
220.9	225.4	917.0	412.9	1183.3
222.9	224.8	916.3	411.5	1183.3
226.9	223.6	915.1	408.6	1183.3
228.9	223.0	914.7	407.2	1183.3
236.9	220.3	913.6	401.4	1183.3
238.9	219.6	913.5	400.0	1183.2
246.9	216.8	913.3	394.2	1183.2
250.9	216.0	910.0	391.6	1183.2
258.9	214.4	904.2	386.3	1183.1
262.9	213.5	901.6	383.6	1183.1
263.8	213.3	901.0	383.0	1183.1

Table 6.2.1-21 Break Mass and Energy Flow for the Long-term Cooling Phase of the DEPSG Break (Sheet 1 of 25)

Time (sec)	Break Flow (Reactor Vessel Side)				Break Flow (Steam Generator Side)			
	Steam		Liquid		Steam		Liquid	
	Mass (lbm/sec)	Enthalpy (Btu/lbm)	Mass (lbm/sec)	Enthalpy (Btu/lbm)	Mass (lbm/sec)	Enthalpy (Btu/lbm)	Mass (lbm/sec)	Enthalpy (Btu/lbm)
264.3	72.6	1188.9	127.2	214.9	182.7	1226.7	0.0	0.0
265.3	133.4	1189.2	252.5	214.7	353.3	1226.5	0.0	0.0
266.3	130.4	1189.7	280.3	213.9	354.0	1226.3	0.0	0.0
267.3	125.5	1190.0	331.6	213.0	352.8	1225.9	0.0	0.0
268.3	121.8	1190.7	389.3	212.1	352.7	1225.3	0.0	0.0
269.3	118.2	1190.8	430.9	211.4	353.0	1224.8	0.0	0.0
270.3	116.9	1190.7	446.5	210.9	353.4	1224.2	0.0	0.0
271.3	116.1	1190.3	441.2	210.4	353.1	1223.6	0.0	0.0
272.3	116.9	1189.8	428.8	210.1	353.5	1222.9	0.0	0.0
273.3	119.4	1189.2	409.0	210.1	353.3	1222.3	0.0	0.0
274.3	121.2	1189.0	391.7	210.2	353.3	1221.7	0.0	0.0
275.3	121.6	1188.7	380.4	210.5	352.4	1221.1	0.0	0.0
276.3	121.7	1188.8	373.4	210.6	351.6	1220.5	0.0	0.0
277.3	121.7	1188.8	368.5	210.7	351.1	1219.9	0.0	0.0
278.3	121.4	1188.7	363.4	210.6	349.5	1219.3	0.0	0.0
279.3	121.3	1188.8	359.5	210.4	348.7	1218.7	0.0	0.0
280.3	120.8	1188.7	354.1	210.0	346.4	1218.1	0.0	0.0
281.3	119.2	1188.6	347.3	209.4	344.3	1217.5	0.0	0.0
282.3	111.2	1188.7	330.3	208.6	340.3	1216.9	0.0	0.0
283.3	108.8	1190.1	330.5	207.8	335.9	1216.3	0.0	0.0
284.3	107.6	1190.4	334.3	207.2	331.3	1215.8	0.1	270.2
285.3	106.2	1190.2	335.7	206.7	325.7	1215.4	0.1	270.2
286.3	109.3	1190.1	346.7	206.3	319.8	1214.6	0.9	270.2
287.3	111.1	1189.3	350.9	206.5	314.4	1213.6	2.7	270.2
288.3	110.8	1188.3	350.9	206.9	310.0	1212.6	4.6	270.2
289.3	109.0	1187.7	346.7	207.2	304.1	1211.7	5.7	270.2
290.3	107.3	1187.6	343.9	207.4	298.4	1210.9	6.2	270.2
291.3	105.8	1187.3	341.3	207.2	293.3	1210.8	6.4	270.2
292.3	103.7	1187.3	337.1	206.9	288.0	1209.9	6.6	270.2
293.3	100.9	1187.1	329.7	206.2	283.1	1209.9	6.7	270.1
294.3	99.1	1187.0	322.8	205.2	279.0	1208.6	7.0	270.2
295.3	97.6	1186.8	315.4	203.8	274.3	1209.2	7.3	270.1
296.3	88.3	1186.1	291.2	202.2	269.3	1208.1	6.8	270.1

Table 6.2.1-21 Break Mass and Energy Flow for the Long-term Cooling Phase of the DEPSG Break (Sheet 2 of 25)

Time (sec)	Break Flow (Reactor Vessel Side)				Break Flow (Steam Generator Side)			
	Steam		Liquid		Steam		Liquid	
	Mass (lbm/sec)	Enthalpy (Btu/lbm)	Mass (lbm/sec)	Enthalpy (Btu/lbm)	Mass (lbm/sec)	Enthalpy (Btu/lbm)	Mass (lbm/sec)	Enthalpy (Btu/lbm)
297.3	85.7	1187.9	288.6	200.4	264.8	1208.2	7.6	270.1
298.3	85.3	1188.5	293.5	199.1	261.3	1207.9	8.5	270.1
299.3	84.8	1188.7	297.3	198.0	257.2	1207.4	9.2	270.1
300.3	83.9	1188.6	299.3	197.3	253.5	1206.7	9.8	270.1
301.3	82.9	1189.0	299.8	196.6	249.7	1206.6	10.5	270.1
302.4	82.5	1188.8	299.3	196.0	245.7	1205.9	11.3	270.1
303.4	88.9	1188.7	317.9	195.4	242.4	1206.1	12.1	270.1
304.4	89.0	1186.9	310.3	195.3	238.7	1205.9	13.1	270.1
305.4	88.7	1186.2	304.2	195.3	234.8	1205.3	14.1	270.1
306.4	88.2	1186.0	299.4	195.0	230.8	1205.2	13.8	270.1
307.4	88.0	1185.9	295.0	194.8	227.3	1204.6	15.2	270.1
308.4	85.7	1186.0	287.0	194.0	223.7	1204.4	16.3	270.1
309.4	76.2	1185.7	259.2	193.1	218.2	1204.0	8.9	270.0
310.4	77.1	1188.3	268.5	192.1	213.5	1204.0	8.4	270.0
311.4	76.2	1188.2	270.6	191.4	209.0	1204.0	10.6	270.0
312.4	73.8	1187.8	268.9	190.8	200.0	1203.1	5.3	269.9
313.4	67.3	1186.5	252.2	189.9	182.0	1205.4	0.5	270.4
314.4	63.2	1185.7	244.9	188.6	171.9	1205.3	0.1	269.1
315.4	63.9	1186.1	250.1	187.3	169.4	1204.3	0.0	0.0
316.4	79.5	1188.2	308.7	186.7	174.9	1205.0	0.0	0.0
317.4	91.1	1189.2	331.7	187.1	186.5	1203.1	4.1	269.9
318.4	99.5	1189.8	327.7	188.3	193.8	1201.6	24.8	269.9
319.4	103.1	1190.0	316.7	190.2	207.6	1201.8	58.1	270.0
320.4	98.6	1189.3	295.7	192.1	208.6	1200.6	81.4	270.0
321.4	85.1	1187.8	262.0	193.2	183.9	1200.5	38.7	269.9
322.4	78.5	1186.8	247.8	192.7	158.7	1200.6	4.1	269.7
323.4	74.6	1186.4	243.7	191.8	146.5	1202.0	1.5	269.5
324.4	70.4	1185.8	238.7	190.4	139.5	1201.4	0.9	269.3
325.4	66.2	1185.5	232.7	188.8	141.6	1202.5	0.3	272.7
326.4	71.5	1186.2	251.2	187.4	144.7	1201.8	0.0	0.0
327.4	90.2	1188.3	309.9	187.0	151.8	1202.1	0.2	267.8
328.5	104.3	1189.4	325.6	188.0	162.0	1200.0	6.1	269.7
329.5	114.8	1190.1	321.1	190.3	177.8	1199.2	25.3	269.8

Table 6.2.1-21 Break Mass and Energy Flow for the Long-term Cooling Phase of the DEPSG Break (Sheet 3 of 25)

Time (sec)	Break Flow (Reactor Vessel Side)				Break Flow (Steam Generator Side)			
	Steam		Liquid		Steam		Liquid	
	Mass (lbm/sec)	Enthalpy (Btu/lbm)	Mass (lbm/sec)	Enthalpy (Btu/lbm)	Mass (lbm/sec)	Enthalpy (Btu/lbm)	Mass (lbm/sec)	Enthalpy (Btu/lbm)
330.5	120.8	1190.6	313.4	193.9	188.4	1199.2	52.4	269.9
331.5	122.0	1190.5	303.8	197.4	198.3	1198.2	104.1	270.0
332.5	117.0	1189.4	288.2	200.3	197.8	1196.8	132.4	269.9
333.5	104.0	1188.0	264.6	201.7	167.7	1197.4	64.9	269.8
334.5	97.3	1187.2	254.9	201.6	140.9	1198.2	9.8	269.6
335.5	93.9	1186.5	253.3	200.8	127.1	1198.3	1.8	269.9
336.5	89.4	1186.0	249.6	199.7	117.8	1199.5	0.5	268.7
337.5	83.1	1185.7	241.7	198.4	114.2	1199.6	0.4	269.4
338.5	76.2	1185.3	230.2	196.7	113.8	1198.6	0.3	269.2
339.5	87.4	1187.8	267.6	195.4	116.5	1199.7	0.2	272.3
340.5	102.9	1190.0	308.0	195.7	130.4	1198.2	2.7	269.5
341.5	111.1	1191.1	320.4	197.8	152.3	1197.5	16.3	269.6
342.5	118.4	1191.9	322.9	201.2	164.0	1196.6	44.2	269.7
343.5	123.1	1192.4	323.9	205.0	172.7	1195.7	82.0	269.8
344.5	122.7	1192.4	314.9	208.4	181.6	1195.5	123.5	269.8
345.5	118.8	1191.7	302.1	210.4	179.5	1195.5	137.5	269.8
346.5	112.9	1190.8	288.8	211.3	164.0	1194.8	93.1	269.7
347.5	108.0	1190.2	280.0	211.2	145.1	1195.3	44.5	269.6
348.5	105.5	1189.8	276.5	210.4	132.5	1194.9	16.4	269.7
349.5	104.1	1189.7	276.2	209.7	126.0	1195.3	7.0	269.4
350.5	103.4	1189.4	275.6	208.8	121.5	1195.6	6.2	269.5
351.6	103.7	1189.4	275.7	207.8	119.5	1195.5	5.9	269.5
352.6	104.4	1189.3	273.9	207.0	117.8	1195.6	5.6	269.5
353.6	101.3	1189.6	264.4	206.0	109.4	1195.3	2.8	269.8
354.6	94.9	1187.5	249.6	204.8	94.5	1196.2	0.3	264.5
355.6	90.0	1186.4	240.7	203.0	89.1	1195.3	0.1	276.3
356.6	93.0	1187.5	248.3	201.3	86.9	1197.9	0.0	0.0
357.6	112.3	1188.7	286.5	200.7	96.2	1196.1	0.3	277.9
358.6	127.2	1190.3	293.2	201.7	123.5	1194.8	7.8	269.5
359.6	135.9	1191.0	287.9	204.3	143.7	1195.0	32.1	269.5
360.6	142.2	1192.2	279.7	207.6	153.5	1193.9	67.6	269.6
361.6	141.6	1191.9	266.5	210.9	159.6	1192.4	110.3	269.7
362.6	136.0	1191.3	253.3	212.9	158.5	1192.7	126.3	269.7

Table 6.2.1-21 Break Mass and Energy Flow for the Long-term Cooling Phase of the DEPSG Break (Sheet 4 of 25)

Time (sec)	Break Flow (Reactor Vessel Side)				Break Flow (Steam Generator Side)			
	Steam		Liquid		Steam		Liquid	
	Mass (lbm/sec)	Enthalpy (Btu/lbm)	Mass (lbm/sec)	Enthalpy (Btu/lbm)	Mass (lbm/sec)	Enthalpy (Btu/lbm)	Mass (lbm/sec)	Enthalpy (Btu/lbm)
363.6	131.0	1190.9	246.5	213.7	152.5	1192.7	151.7	269.7
364.6	124.5	1190.4	240.1	213.9	130.6	1192.2	93.3	269.5
365.6	119.7	1189.5	236.3	213.2	108.7	1192.1	23.0	269.4
366.6	114.3	1189.2	231.7	211.9	89.0	1195.1	0.6	269.9
367.6	108.8	1188.4	227.6	210.2	78.0	1192.3	0.0	0.0
368.6	101.6	1186.0	220.5	208.1	75.3	1195.2	0.0	0.0
369.6	94.4	1187.5	214.0	205.6	71.9	1194.7	0.0	0.0
370.6	102.4	1187.5	233.3	203.4	72.3	1196.4	0.0	0.0
371.6	119.2	1190.0	267.2	202.9	89.4	1193.3	0.6	270.2
372.6	130.6	1191.8	275.1	204.2	120.3	1193.4	11.5	269.5
373.6	139.4	1193.3	271.5	206.9	136.6	1192.8	38.7	269.5
374.6	143.8	1194.2	262.5	210.4	145.4	1191.4	76.4	269.6
375.6	140.7	1193.9	247.6	213.3	150.2	1191.6	128.4	269.6
376.6	137.8	1192.4	239.8	215.0	156.8	1191.9	33.6	269.2
377.6	131.6	1192.2	231.9	216.0	138.3	1192.3	0.7	270.9
378.6	125.6	1189.6	226.1	215.9	102.1	1193.4	2.5	269.7
379.6	117.2	1189.1	217.4	214.6	75.2	1194.2	0.6	266.6
380.6	109.0	1189.0	210.1	212.2	63.1	1191.8	0.0	0.0
381.6	99.1	1188.7	200.8	209.3	63.9	1192.5	0.0	0.0
382.6	98.1	1187.6	205.0	206.2	59.4	1193.6	0.0	0.0
383.6	115.5	1190.5	241.6	204.8	65.6	1193.6	0.0	0.0
384.6	129.2	1191.2	258.7	205.0	99.0	1191.9	3.3	269.5
385.6	140.1	1193.8	261.1	207.2	125.4	1192.6	22.1	269.6
386.6	147.8	1193.4	257.0	211.5	134.4	1191.1	51.4	269.5
387.6	152.3	1195.7	253.2	216.8	143.8	1190.5	55.9	269.4
388.6	149.9	1195.7	245.1	221.8	158.1	1191.3	1.9	269.9
389.6	141.4	1192.9	231.6	224.2	153.6	1191.2	123.7	269.6
390.6	134.8	1192.5	222.9	224.0	116.2	1189.9	30.2	269.2
391.6	127.6	1190.4	213.2	222.0	78.4	1191.3	0.5	266.0
392.6	120.0	1190.0	202.5	218.8	50.3	1190.9	0.1	280.0
393.6	110.1	1189.8	191.8	215.0	59.0	1191.5	0.0	0.0
394.6	102.7	1187.0	184.0	210.9	52.9	1192.8	0.0	0.0
395.6	114.7	1189.2	209.3	207.8	51.7	1191.5	0.0	0.0

Table 6.2.1-21 Break Mass and Energy Flow for the Long-term Cooling Phase of the DEPSG Break (Sheet 5 of 25)

Time (sec)	Break Flow (Reactor Vessel Side)				Break Flow (Steam Generator Side)			
	Steam		Liquid		Steam		Liquid	
	Mass (lbm/sec)	Enthalpy (Btu/lbm)	Mass (lbm/sec)	Enthalpy (Btu/lbm)	Mass (lbm/sec)	Enthalpy (Btu/lbm)	Mass (lbm/sec)	Enthalpy (Btu/lbm)
396.7	129.9	1191.1	231.7	207.1	73.2	1191.3	0.1	270.4
397.7	141.2	1192.8	235.6	208.4	108.6	1191.0	9.5	269.3
398.7	148.3	1194.5	229.3	211.2	123.9	1190.4	33.7	269.4
399.7	155.6	1196.2	220.8	215.2	132.9	1190.0	40.2	269.4
400.7	157.6	1198.2	208.7	219.3	142.7	1190.9	28.0	269.7
401.7	150.8	1198.7	191.4	222.5	151.0	1189.2	186.0	269.5
402.7	138.8	1196.0	175.7	222.4	118.4	1187.5	123.2	269.4
403.7	132.2	1192.1	171.5	220.3	62.4	1187.5	13.9	269.3
404.7	123.8	1189.8	168.6	217.3	48.4	1192.1	0.6	270.6
405.7	111.6	1189.1	162.5	213.6	51.3	1189.1	0.0	0.0
406.7	116.7	1189.4	176.1	210.3	44.1	1190.5	0.0	0.0
407.7	130.0	1191.5	202.9	209.1	52.3	1191.2	0.0	0.0
408.7	141.1	1193.4	216.2	210.2	94.4	1189.9	3.6	269.3
409.7	150.3	1196.3	221.5	213.1	119.6	1190.8	25.5	269.4
410.7	156.7	1199.2	212.9	217.2	130.9	1188.3	22.6	269.4
411.7	161.7	1203.7	198.9	222.3	138.9	1190.0	43.6	269.7
412.7	157.1	1209.8	176.9	227.6	147.0	1187.6	178.9	269.5
413.7	148.4	1208.3	156.3	228.7	128.4	1187.1	168.5	269.5
414.7	144.6	1200.7	149.6	226.9	91.3	1187.8	52.1	269.4
415.7	138.4	1195.1	146.7	223.8	48.4	1188.0	3.0	269.4
416.7	127.4	1193.1	142.8	220.1	41.4	1188.4	0.1	239.4
417.7	112.7	1190.8	137.4	215.0	45.8	1192.1	0.0	0.0
418.7	119.6	1189.8	152.6	210.9	38.1	1189.0	0.0	0.0
419.7	132.9	1192.6	179.3	209.4	43.4	1188.9	0.0	0.0
420.7	144.8	1194.6	194.1	210.5	87.1	1189.9	1.9	270.2
421.7	155.5	1197.0	199.6	213.7	116.4	1188.7	23.4	269.3
422.7	163.2	1202.4	189.7	219.0	130.3	1188.9	7.7	269.4
423.7	166.5	1221.0	167.5	226.4	137.1	1188.4	81.1	269.7
424.7	161.5	1244.2	143.8	234.2	141.8	1186.6	217.8	269.7
425.7	151.5	1251.5	122.0	241.0	127.5	1185.9	280.6	269.6
426.7	141.3	1237.9	106.3	241.2	92.3	1186.2	86.7	269.4
427.7	139.5	1203.6	102.8	232.8	36.9	1189.7	8.9	270.1
428.7	129.2	1193.5	102.1	223.9	44.5	1186.5	0.8	265.7

Table 6.2.1-21 Break Mass and Energy Flow for the Long-term Cooling Phase of the DEPSG Break (Sheet 6 of 25)

Time (sec)	Break Flow (Reactor Vessel Side)				Break Flow (Steam Generator Side)			
	Steam		Liquid		Steam		Liquid	
	Mass (lbm/sec)	Enthalpy (Btu/lbm)	Mass (lbm/sec)	Enthalpy (Btu/lbm)	Mass (lbm/sec)	Enthalpy (Btu/lbm)	Mass (lbm/sec)	Enthalpy (Btu/lbm)
429.7	124.2	1190.8	106.9	215.4	36.4	1189.6	0.0	0.0
430.7	138.8	1191.7	128.7	211.5	33.4	1187.5	0.0	0.0
431.8	148.5	1195.3	144.3	211.4	60.7	1189.2	0.0	0.0
432.8	160.4	1198.3	153.1	214.2	101.8	1188.1	11.7	269.7
433.8	166.6	1208.5	150.1	220.0	123.5	1188.4	6.2	269.3
434.8	166.3	1229.3	136.4	228.6	135.2	1187.2	87.7	269.7
435.8	163.3	1249.4	122.6	236.6	138.0	1186.1	233.8	269.7
436.8	153.3	1257.0	104.7	243.0	125.7	1186.2	322.2	269.6
437.8	144.4	1253.3	90.0	245.9	93.4	1186.1	104.3	269.4
438.8	140.4	1217.2	84.0	238.0	37.8	1185.2	11.2	269.8
439.8	131.6	1196.0	83.7	226.4	39.7	1186.4	1.0	268.7
440.8	119.6	1191.5	85.7	215.4	32.5	1184.6	0.1	333.3
441.8	132.3	1191.2	104.1	208.9	28.3	1190.8	0.0	0.0
442.8	144.4	1194.6	123.9	207.6	42.7	1189.7	0.0	0.0
443.8	156.4	1197.8	136.2	210.1	91.4	1187.8	4.1	269.2
444.8	164.5	1204.2	139.0	215.6	116.0	1187.7	11.0	270.1
445.8	166.9	1224.6	132.4	224.2	127.7	1186.6	38.1	269.5
446.8	166.1	1246.2	121.3	232.9	131.7	1186.8	147.2	269.7
447.8	159.1	1257.3	105.7	240.0	127.5	1185.1	276.2	269.7
448.8	149.5	1258.2	88.8	245.4	105.8	1185.7	198.6	269.6
449.8	142.5	1249.1	77.7	245.4	59.7	1185.9	36.5	269.6
450.8	138.7	1212.7	74.0	235.7	26.2	1187.0	4.2	269.0
451.8	126.1	1195.1	73.8	222.3	35.6	1185.4	0.6	278.2
452.8	130.5	1191.6	85.1	211.9	25.6	1183.6	0.0	0.0
453.8	143.7	1194.2	103.9	208.8	26.6	1191.7	0.0	0.0
454.8	155.8	1197.0	116.7	210.1	68.3	1187.4	0.3	258.6
455.8	164.2	1204.5	120.5	215.8	104.0	1187.2	8.1	269.3
456.8	166.4	1226.2	116.5	224.9	119.2	1186.8	16.9	269.9
457.8	165.7	1248.6	108.8	233.2	127.8	1186.2	95.0	269.7
458.8	162.9	1257.6	96.9	240.1	127.9	1184.7	193.4	269.8
459.8	154.8	1259.0	82.3	245.4	113.5	1185.9	212.7	269.7
460.8	148.5	1258.0	70.0	249.2	75.5	1184.5	63.5	269.4
461.8	141.6	1251.2	60.8	248.1	24.9	1183.3	8.3	269.8

Table 6.2.1-21 Break Mass and Energy Flow for the Long-term Cooling Phase of the DEPSG Break (Sheet 7 of 25)

Time (sec)	Break Flow (Reactor Vessel Side)				Break Flow (Steam Generator Side)			
	Steam		Liquid		Steam		Liquid	
	Mass (lbm/sec)	Enthalpy (Btu/lbm)	Mass (lbm/sec)	Enthalpy (Btu/lbm)	Mass (lbm/sec)	Enthalpy (Btu/lbm)	Mass (lbm/sec)	Enthalpy (Btu/lbm)
462.8	134.3	1212.9	57.7	233.3	35.2	1187.0	1.2	270.3
463.8	125.1	1193.8	61.0	215.9	24.9	1184.7	0.1	250.0
464.8	133.9	1192.4	76.4	206.0	21.2	1192.5	0.0	0.0
465.8	145.8	1194.1	93.1	204.9	31.4	1184.7	0.0	0.0
466.8	155.7	1198.3	104.2	208.1	81.4	1186.1	1.6	269.4
467.8	165.8	1207.7	108.3	215.8	110.2	1187.2	5.2	269.7
468.8	166.4	1231.9	105.7	225.9	121.1	1186.8	36.3	269.5
469.9	167.5	1251.2	100.0	234.6	124.6	1185.6	118.7	269.7
470.9	160.5	1257.3	87.4	241.0	120.4	1183.6	209.7	269.7
471.9	151.3	1257.9	73.7	245.9	97.4	1185.5	145.9	269.6
472.9	146.7	1259.0	63.4	249.6	44.5	1186.5	30.8	269.5
473.9	137.9	1247.3	54.7	247.2	25.3	1185.8	4.7	271.7
474.9	127.8	1210.5	52.7	227.7	27.5	1185.5	1.0	265.3
475.9	131.1	1194.1	62.4	210.9	18.1	1180.3	0.1	300.0
476.9	145.4	1193.3	78.5	205.7	20.0	1190.0	0.0	0.0
477.9	155.6	1197.5	90.6	207.7	57.8	1187.0	0.0	0.0
478.9	164.7	1205.6	95.8	216.0	100.5	1186.3	2.8	269.0
479.9	166.7	1231.0	94.3	226.7	116.9	1186.3	14.8	270.2
480.9	166.8	1251.5	89.3	235.5	123.4	1185.4	82.1	269.8
481.9	167.4	1258.1	81.6	241.7	120.3	1184.5	167.9	269.8
482.9	156.4	1258.3	68.3	246.4	109.2	1184.1	192.6	269.7
483.9	149.9	1258.0	58.1	250.2	69.9	1183.5	68.0	269.6
484.9	145.4	1257.9	49.5	253.7	19.8	1186.9	11.2	269.4
485.9	131.6	1243.9	42.0	242.4	30.3	1188.1	2.4	266.7
486.9	128.9	1204.8	45.7	216.7	16.9	1183.4	0.4	261.9
487.9	141.1	1193.5	60.4	202.2	16.6	1186.7	0.1	285.7
488.9	154.4	1196.2	74.1	205.5	31.5	1184.1	0.0	0.0
489.9	164.6	1202.1	81.3	212.7	83.6	1186.4	1.1	264.6
490.9	165.8	1226.2	81.2	225.2	109.3	1186.6	2.4	271.7
491.9	166.9	1250.0	77.7	235.3	120.4	1185.7	56.0	269.7
492.9	169.4	1257.2	72.4	242.4	120.4	1184.6	125.5	269.8
493.9	164.1	1258.5	63.4	247.3	116.0	1183.7	199.2	269.8
494.9	155.9	1257.8	53.5	251.6	92.9	1184.2	143.9	269.7

Table 6.2.1-21 Break Mass and Energy Flow for the Long-term Cooling Phase of the DEPSG Break (Sheet 8 of 25)

Time (sec)	Break Flow (Reactor Vessel Side)				Break Flow (Steam Generator Side)			
	Steam		Liquid		Steam		Liquid	
	Mass (lbm/sec)	Enthalpy (Btu/lbm)	Mass (lbm/sec)	Enthalpy (Btu/lbm)	Mass (lbm/sec)	Enthalpy (Btu/lbm)	Mass (lbm/sec)	Enthalpy (Btu/lbm)
495.9	150.3	1258.2	44.9	255.1	43.6	1183.5	32.3	269.5
496.9	143.8	1256.6	37.0	257.5	20.8	1182.7	5.4	270.0
497.9	126.2	1238.5	31.6	233.7	21.9	1191.8	1.3	273.4
498.9	132.9	1202.4	42.0	200.8	13.6	1176.5	0.2	260.9
499.9	147.6	1194.4	58.0	197.8	16.2	1185.2	0.1	200.0
500.9	159.3	1197.4	69.6	205.0	49.8	1186.4	0.1	322.6
510.9	154.1	1241.3	51.3	235.3	68.6	1184.7	56.2	269.8
520.9	159.3	1243.0	47.9	237.1	65.9	1184.5	41.0	269.8
530.9	159.8	1241.6	31.6	234.4	66.1	1184.3	74.2	269.9
540.9	160.7	1238.9	34.0	230.5	67.9	1183.5	75.9	269.9
551.0	160.6	1242.6	22.2	233.5	63.6	1183.3	81.8	270.0
561.0	157.1	1237.8	30.0	226.1	58.4	1183.4	61.9	270.0
571.0	155.9	1238.5	28.2	230.4	53.4	1183.1	104.1	270.0
581.0	155.9	1238.8	26.0	231.1	51.7	1182.8	104.7	270.1
591.0	155.7	1239.1	24.5	229.9	50.9	1182.6	105.9	270.1
601.0	155.1	1242.8	24.9	235.0	54.8	1182.7	103.8	270.2
611.0	157.6	1246.2	24.3	244.1	61.9	1182.6	104.6	270.2
621.0	160.3	1239.0	27.4	235.4	62.1	1182.5	86.8	270.3
631.0	156.9	1238.7	22.9	231.9	53.4	1182.3	67.0	270.2
641.0	154.9	1239.7	17.7	232.1	46.2	1182.3	67.0	270.3
651.0	155.5	1241.8	12.8	231.7	42.5	1182.2	126.6	270.4
661.0	156.8	1243.7	9.3	233.6	43.9	1181.9	113.0	270.4
671.0	157.5	1253.3	4.4	265.5	49.9	1182.3	138.8	270.5
681.0	155.6	1255.8	2.2	188.6	52.8	1181.7	63.0	270.5
691.0	161.5	1242.0	15.8	240.3	58.4	1182.0	75.5	270.7
701.0	158.4	1257.8	0.6	276.9	46.3	1181.7	103.8	270.6
711.0	153.6	1256.1	0.8	269.3	40.0	1181.6	84.4	270.6
721.0	154.2	1241.4	8.8	218.0	32.9	1181.5	147.9	270.7
731.0	158.9	1251.0	5.8	267.3	44.4	1181.7	130.1	270.8
741.0	159.5	1254.1	1.1	274.4	50.4	1181.5	98.4	270.8
751.0	158.8	1251.4	1.7	255.8	50.0	1181.5	63.3	270.9
761.0	152.9	1249.2	2.0	256.4	35.7	1181.7	88.7	270.8
771.0	158.0	1253.1	0.7	277.8	28.6	1181.2	140.5	270.9

Table 6.2.1-21 Break Mass and Energy Flow for the Long-term Cooling Phase of the DEPSG Break (Sheet 9 of 25)

Time (sec)	Break Flow (Reactor Vessel Side)				Break Flow (Steam Generator Side)			
	Steam		Liquid		Steam		Liquid	
	Mass (lbm/sec)	Enthalpy (Btu/lbm)	Mass (lbm/sec)	Enthalpy (Btu/lbm)	Mass (lbm/sec)	Enthalpy (Btu/lbm)	Mass (lbm/sec)	Enthalpy (Btu/lbm)
781.1	160.1	1253.5	0.4	286.0	37.6	1181.9	99.8	271.0
791.1	159.0	1253.5	0.3	249.9	40.3	1181.1	74.9	271.0
801.1	162.6	1253.9	0.4	292.5	47.7	1181.6	152.6	271.3
811.1	157.8	1249.3	1.4	275.4	30.7	1181.0	188.4	271.4
821.1	159.9	1248.1	1.3	280.3	27.4	1181.6	118.3	271.2
831.1	157.0	1249.6	0.7	280.0	34.0	1181.5	25.5	271.1
841.1	161.5	1252.2	0.2	315.6	44.7	1181.5	29.5	271.3
851.1	166.5	1250.5	0.1	285.7	25.7	1180.9	87.5	271.4
861.1	165.5	1249.8	0.2	272.6	20.2	1180.7	172.7	271.5
871.1	165.0	1249.7	0.1	285.7	22.0	1181.7	94.7	271.4
881.1	168.4	1249.3	0.2	263.0	30.8	1181.3	224.7	271.6
891.1	165.6	1248.3	0.2	285.7	25.1	1181.3	47.3	271.7
901.1	166.8	1248.3	0.1	286.4	30.6	1181.0	121.8	271.7
911.1	166.1	1247.1	0.3	259.2	19.5	1181.7	170.0	271.8
921.1	164.1	1246.9	0.1	307.7	20.2	1180.7	35.8	271.9
931.1	171.0	1246.0	0.2	291.5	29.9	1181.2	318.7	271.9
941.1	164.3	1244.4	0.3	294.0	21.1	1181.1	12.4	271.5
951.1	164.2	1246.0	0.1	272.7	26.1	1181.3	37.6	272.0
961.1	169.4	1243.8	0.3	264.9	17.8	1181.2	325.7	272.1
971.1	162.6	1243.4	0.4	297.2	20.2	1181.4	24.1	272.2
981.1	167.2	1244.0	0.2	280.0	37.6	1181.2	141.9	272.2
991.1	167.4	1241.2	0.4	288.8	16.4	1180.7	216.8	272.3
1001.1	161.0	1241.9	0.3	264.7	16.6	1181.3	17.2	272.0
1011.1	170.9	1241.1	0.2	291.5	35.3	1181.3	225.8	272.3
1021.2	166.6	1240.4	0.3	285.7	17.5	1181.1	45.0	272.3
1031.2	166.5	1240.2	0.2	260.9	16.4	1181.4	33.6	272.1
1041.2	172.8	1239.3	0.4	300.2	27.4	1180.8	312.2	272.5
1051.2	166.6	1237.7	0.5	285.7	17.2	1181.6	39.3	272.6
1061.2	166.9	1237.9	0.3	250.0	16.7	1181.5	28.1	272.4
1071.2	173.7	1236.9	0.5	288.5	26.9	1181.1	335.4	272.7
1081.2	167.8	1236.3	0.7	289.8	19.5	1180.7	82.5	272.6
1091.2	165.8	1235.2	0.6	271.2	18.7	1180.7	54.2	272.7
1101.2	170.8	1234.2	0.6	290.3	21.9	1181.5	173.3	272.8

Table 6.2.1-21 Break Mass and Energy Flow for the Long-term Cooling Phase of the DEPSG Break (Sheet 10 of 25)

Time (sec)	Break Flow (Reactor Vessel Side)				Break Flow (Steam Generator Side)			
	Steam		Liquid		Steam		Liquid	
	Mass (lbm/sec)	Enthalpy (Btu/lbm)	Mass (lbm/sec)	Enthalpy (Btu/lbm)	Mass (lbm/sec)	Enthalpy (Btu/lbm)	Mass (lbm/sec)	Enthalpy (Btu/lbm)
1111.2	169.2	1234.0	0.6	281.2	18.2	1180.7	82.0	272.8
1121.2	170.7	1232.9	0.8	285.7	20.0	1181.2	182.3	273.0
1131.2	169.4	1232.0	0.7	281.8	17.5	1181.4	56.1	273.1
1141.2	172.2	1231.7	0.7	281.7	24.8	1181.3	178.0	273.1
1151.2	170.4	1230.9	0.7	291.7	15.2	1180.9	55.4	273.0
1161.2	172.4	1230.6	0.7	283.6	17.9	1181.2	92.6	273.2
1171.2	174.7	1229.0	0.9	276.6	21.8	1180.6	304.3	273.3
1181.2	169.7	1227.8	1.1	292.4	16.3	1180.8	55.2	273.3
1191.2	170.1	1228.1	0.9	275.9	19.1	1181.9	38.8	273.2
1201.2	174.8	1226.9	1.0	282.8	19.9	1180.6	269.2	273.5
1211.2	171.1	1225.9	1.1	283.2	15.6	1181.3	84.5	273.5
1221.2	171.4	1225.8	1.0	291.7	16.1	1181.3	35.3	273.5
1231.3	175.9	1224.9	1.2	282.1	22.0	1181.2	291.8	273.7
1241.3	172.2	1222.4	1.9	286.5	15.6	1181.1	143.8	273.6
1251.3	168.8	1223.3	1.4	276.6	18.3	1181.2	5.3	275.0
1261.3	174.1	1222.6	1.2	289.3	17.9	1180.9	104.7	273.8
1271.3	176.9	1220.2	1.8	286.5	21.5	1181.1	347.9	273.9
1281.3	170.6	1220.4	2.2	279.8	13.0	1181.0	31.0	273.9
1291.3	170.2	1220.1	1.6	288.3	19.1	1181.1	33.5	274.0
1301.3	176.6	1219.7	1.6	281.3	19.2	1180.9	194.4	274.1
1311.3	175.3	1217.1	2.4	287.5	16.0	1181.4	256.8	274.1
1321.3	169.9	1216.9	2.2	281.1	11.8	1181.0	4.5	277.8
1331.3	172.8	1217.3	1.9	283.4	21.3	1181.3	60.6	274.1
1341.3	178.3	1215.9	2.3	285.1	23.5	1180.7	300.1	274.4
1351.3	173.6	1214.9	2.7	286.8	14.8	1182.1	81.9	274.2
1361.3	171.9	1213.8	2.4	284.5	20.1	1180.6	23.6	274.2
1371.3	175.9	1214.3	2.3	283.9	15.0	1180.9	173.4	274.6
1381.3	176.6	1212.9	2.5	286.9	11.3	1181.3	73.2	274.6
1391.3	177.9	1212.5	2.6	283.5	14.5	1180.9	73.2	274.9
1401.3	179.7	1211.5	3.3	286.2	18.6	1181.6	313.2	274.8
1411.3	174.8	1210.0	3.5	283.6	11.1	1180.8	56.9	274.7
1421.3	174.6	1210.0	2.9	286.7	13.4	1181.3	7.8	274.4
1431.3	180.2	1209.8	3.0	284.3	16.2	1181.5	162.6	275.1

Table 6.2.1-21 Break Mass and Energy Flow for the Long-term Cooling Phase of the DEPSG Break (Sheet 11 of 25)

Time (sec)	Break Flow (Reactor Vessel Side)				Break Flow (Steam Generator Side)			
	Steam		Liquid		Steam		Liquid	
	Mass (lbm/sec)	Enthalpy (Btu/lbm)	Mass (lbm/sec)	Enthalpy (Btu/lbm)	Mass (lbm/sec)	Enthalpy (Btu/lbm)	Mass (lbm/sec)	Enthalpy (Btu/lbm)
1441.3	181.1	1208.2	4.5	285.1	20.3	1181.4	381.3	275.0
1451.3	172.5	1207.5	4.7	284.5	8.6	1181.4	19.1	275.4
1461.3	171.8	1206.6	3.6	283.7	13.6	1181.4	0.0	0.0
1471.3	178.7	1207.6	3.1	286.6	17.0	1180.9	48.4	275.4
1481.3	183.3	1205.7	4.4	286.4	19.5	1181.5	368.8	275.3
1491.3	178.0	1204.5	6.5	285.5	13.2	1181.3	176.7	275.4
1501.3	171.2	1204.4	5.3	283.6	10.5	1181.4	0.6	266.7
1511.3	173.6	1203.9	3.8	286.1	12.1	1181.0	0.0	0.0
1521.3	181.3	1203.5	3.9	286.1	13.0	1181.4	56.4	275.9
1531.3	184.8	1202.4	6.0	286.2	20.2	1181.5	452.7	275.6
1541.3	177.7	1200.9	8.5	285.0	10.7	1181.7	135.2	275.9
1551.3	171.8	1200.8	7.1	284.3	9.1	1180.4	0.6	266.5
1561.3	174.4	1200.5	5.3	285.2	12.0	1181.6	0.0	0.0
1571.3	180.6	1199.9	5.0	286.0	14.4	1181.4	39.1	276.0
1581.3	186.3	1199.1	7.0	286.3	19.5	1181.5	407.5	276.0
1591.3	180.3	1197.4	9.6	285.6	11.8	1181.7	174.5	276.0
1601.4	174.6	1197.4	9.8	285.6	8.4	1181.3	1.0	280.3
1611.4	175.0	1196.9	7.9	284.4	11.5	1181.2	0.1	200.0
1621.4	180.6	1196.3	7.0	285.1	13.9	1181.2	26.9	276.6
1631.4	185.5	1195.7	8.5	286.4	23.4	1181.7	404.8	276.4
1641.4	180.3	1193.6	10.6	286.3	15.2	1181.4	192.4	276.5
1651.4	174.6	1194.7	9.2	285.4	12.7	1181.6	1.3	261.5
1661.4	176.2	1193.5	6.0	287.2	17.1	1182.1	7.4	278.4
1671.4	177.0	1192.7	12.3	286.1	13.9	1181.0	36.6	276.8
1681.4	173.6	1191.8	23.3	284.1	14.1	1181.8	45.5	276.0
1691.4	166.8	1191.8	31.7	281.5	10.7	1181.3	2.1	285.7
1701.4	159.7	1191.0	35.9	279.9	11.2	1181.9	0.4	275.0
1711.4	155.4	1191.1	41.3	276.9	13.5	1181.8	0.2	300.0
1721.4	152.4	1190.3	50.9	272.5	15.0	1181.0	0.2	250.0
1731.4	150.4	1190.8	33.2	269.4	13.9	1181.6	0.2	250.0
1741.4	145.3	1191.3	2.3	265.2	9.7	1181.8	0.1	300.0
1751.4	137.8	1190.1	0.0	0.0	10.3	1182.3	0.1	300.0
1761.4	134.2	1190.0	0.0	0.0	13.7	1181.2	0.1	201.0

Table 6.2.1-21 Break Mass and Energy Flow for the Long-term Cooling Phase of the DEPSG Break (Sheet 12 of 25)

Time (sec)	Break Flow (Reactor Vessel Side)				Break Flow (Steam Generator Side)			
	Steam		Liquid		Steam		Liquid	
	Mass (lbm/sec)	Enthalpy (Btu/lbm)	Mass (lbm/sec)	Enthalpy (Btu/lbm)	Mass (lbm/sec)	Enthalpy (Btu/lbm)	Mass (lbm/sec)	Enthalpy (Btu/lbm)
1771.4	134.6	1190.9	0.0	0.0	17.9	1181.9	0.0	0.0
1781.4	134.5	1190.3	0.0	0.0	16.5	1181.8	0.1	100.0
1791.4	129.3	1189.5	0.0	0.0	12.3	1180.9	0.0	0.0
1801.4	121.7	1189.0	0.0	0.0	9.7	1182.9	0.0	0.0
1811.4	115.2	1189.2	0.0	0.0	11.0	1181.7	0.0	0.0
1821.4	115.2	1189.2	0.0	0.0	17.1	1181.5	0.0	0.0
1831.4	113.8	1188.8	77.0	175.9	18.8	1181.3	0.0	0.0
1841.4	110.6	1189.0	236.0	167.7	24.1	1181.6	0.0	0.0
1851.4	110.6	1188.1	281.0	167.3	23.8	1181.7	0.0	0.0
1861.4	112.3	1188.8	238.0	167.4	21.8	1181.8	0.0	0.0
1871.4	110.1	1188.0	230.8	167.6	22.4	1181.5	0.0	0.0
1881.4	107.9	1188.1	237.7	167.8	22.0	1181.6	0.0	0.0
1891.4	106.2	1188.3	236.0	167.9	22.6	1181.5	0.0	0.0
1901.4	105.2	1186.3	229.7	168.2	23.6	1181.8	0.0	0.0
1911.4	104.0	1188.5	222.9	168.3	24.1	1181.7	0.0	0.0
1921.4	102.8	1187.7	217.4	168.6	23.9	1181.8	0.0	0.0
1931.4	101.4	1186.4	214.6	168.8	23.7	1181.8	0.0	0.0
1941.4	100.0	1188.0	214.8	169.0	23.7	1181.4	0.0	0.0
1951.4	98.7	1187.4	216.6	169.2	23.7	1181.8	0.0	0.0
1961.4	97.6	1187.5	220.4	169.4	23.3	1181.7	0.0	0.0
1971.4	96.8	1186.0	221.3	169.6	21.9	1181.7	0.0	0.0
1981.4	95.5	1188.5	223.8	169.8	22.2	1181.3	0.0	0.0
1991.4	94.3	1186.6	224.4	170.0	22.7	1181.8	0.0	0.0
2001.4	93.4	1186.3	224.1	170.2	23.3	1182.3	0.0	0.0
2011.4	92.6	1186.8	223.6	170.4	24.0	1181.4	0.0	0.0
2021.4	91.8	1187.4	223.2	170.6	24.4	1181.5	0.0	0.0
2031.4	91.0	1185.7	222.9	170.8	24.5	1182.4	0.0	0.0
2041.4	90.1	1187.6	223.0	171.0	24.6	1181.2	0.0	0.0
2051.4	89.4	1184.6	223.6	171.2	24.5	1182.2	0.0	0.0
2061.4	88.5	1186.4	224.6	171.5	24.5	1181.7	0.0	0.0
2071.4	87.7	1187.0	225.7	171.6	24.3	1181.8	0.0	0.0
2081.4	87.1	1186.0	226.7	171.9	23.2	1181.2	0.0	0.0
2091.4	86.3	1186.6	228.1	172.1	22.6	1182.4	0.0	0.0

Table 6.2.1-21 Break Mass and Energy Flow for the Long-term Cooling Phase of the DEPSG Break (Sheet 13 of 25)

Time (sec)	Break Flow (Reactor Vessel Side)				Break Flow (Steam Generator Side)			
	Steam		Liquid		Steam		Liquid	
	Mass (lbm/sec)	Enthalpy (Btu/lbm)	Mass (lbm/sec)	Enthalpy (Btu/lbm)	Mass (lbm/sec)	Enthalpy (Btu/lbm)	Mass (lbm/sec)	Enthalpy (Btu/lbm)
2101.4	84.7	1185.4	231.2	173.5	23.4	1181.5	0.0	0.0
2111.4	82.7	1183.8	239.7	176.2	23.5	1181.6	0.0	0.0
2121.4	81.2	1183.5	251.7	179.4	23.9	1181.9	0.0	0.0
2131.4	79.9	1184.0	259.9	181.5	24.6	1181.9	0.0	0.0
2141.4	78.5	1182.2	269.2	183.0	25.1	1181.8	0.0	0.0
2151.4	77.3	1182.4	275.3	184.0	25.0	1181.9	0.0	0.0
2161.4	75.6	1183.9	281.5	184.9	25.2	1181.3	0.0	0.0
2171.4	79.9	1182.7	265.5	186.9	16.3	1182.3	0.0	0.0
2181.4	77.3	1183.7	223.2	186.6	18.9	1181.7	0.0	0.0
2191.4	69.3	1181.8	286.0	185.2	23.9	1181.1	0.0	0.0
2201.4	69.4	1183.0	327.8	188.3	25.8	1181.8	0.1	101.0
2211.4	77.5	1185.8	280.1	190.7	21.8	1182.2	0.0	0.0
2221.4	76.8	1182.3	242.7	187.0	20.0	1181.5	0.0	0.0
2231.4	72.2	1182.8	286.6	185.8	21.3	1181.7	0.0	0.0
2241.4	76.2	1184.8	284.8	187.8	19.3	1181.3	0.0	0.0
2251.4	75.7	1182.3	256.1	185.4	19.8	1181.2	0.0	0.0
2261.4	73.0	1182.2	288.2	185.4	21.6	1181.6	0.0	0.0
2271.4	70.7	1182.2	300.1	185.9	25.1	1181.6	0.1	101.0
2281.4	71.6	1183.0	299.0	185.9	25.9	1181.7	0.0	0.0
2291.4	75.4	1184.4	286.0	185.4	19.5	1182.0	0.0	0.0
2301.4	76.7	1182.5	230.2	185.0	17.5	1181.6	0.0	0.0
2311.4	67.1	1181.8	261.6	183.0	21.3	1181.5	0.0	0.0
2321.4	62.7	1181.8	331.1	185.5	26.5	1181.7	0.0	0.0
2331.4	69.3	1183.0	324.6	190.9	25.9	1181.6	0.2	200.0
2341.4	73.4	1185.3	253.8	191.4	20.3	1181.8	0.0	0.0
2351.4	66.6	1181.7	275.9	188.4	21.4	1182.1	0.0	0.0
2361.4	63.0	1182.5	322.5	188.7	25.4	1181.4	0.0	0.0
2371.4	68.9	1182.9	308.8	191.4	24.9	1181.9	0.0	0.0
2381.4	71.5	1184.6	257.8	190.2	20.5	1181.9	0.0	0.0
2391.4	65.9	1180.6	283.2	188.1	22.8	1181.5	0.0	0.0
2401.4	63.5	1182.7	316.4	188.6	25.5	1181.6	0.0	0.0
2411.4	69.0	1182.6	296.9	190.5	23.4	1182.4	0.0	0.0
2421.4	70.0	1182.9	261.8	189.2	20.0	1181.5	0.0	0.0

Table 6.2.1-21 Break Mass and Energy Flow for the Long-term Cooling Phase of the DEPSG Break (Sheet 14 of 25)

Time (sec)	Break Flow (Reactor Vessel Side)				Break Flow (Steam Generator Side)			
	Steam		Liquid		Steam		Liquid	
	Mass (lbm/sec)	Enthalpy (Btu/lbm)	Mass (lbm/sec)	Enthalpy (Btu/lbm)	Mass (lbm/sec)	Enthalpy (Btu/lbm)	Mass (lbm/sec)	Enthalpy (Btu/lbm)
2431.4	64.6	1181.1	287.2	187.9	22.1	1182.1	0.0	0.0
2441.4	63.1	1183.8	313.4	188.7	24.3	1181.6	0.0	0.0
2451.4	67.9	1182.6	293.8	190.7	22.4	1181.3	0.0	0.0
2461.4	68.1	1182.1	267.7	189.7	19.8	1181.5	0.0	0.0
2471.4	63.2	1180.4	287.1	188.7	22.4	1181.9	0.0	0.0
2481.4	62.0	1183.9	308.2	189.4	24.2	1181.7	0.0	0.0
2491.4	65.6	1182.9	296.1	191.2	23.6	1181.7	0.0	0.0
2501.4	66.8	1179.6	272.5	190.8	21.5	1181.2	0.0	0.0
2511.4	63.4	1183.0	281.0	189.3	22.0	1181.8	0.0	0.0
2521.4	61.3	1181.1	304.4	189.5	24.1	1181.1	0.0	0.0
2531.4	64.1	1182.5	300.5	191.2	24.3	1181.9	0.0	0.0
2541.4	66.6	1182.9	272.9	191.3	22.4	1181.5	0.0	0.0
2551.4	67.3	1182.8	260.2	188.2	23.0	1179.8	0.0	0.0
2561.4	67.9	1184.1	244.5	184.0	22.4	1181.5	0.0	0.0
2571.4	68.1	1184.8	236.5	182.7	23.0	1183.6	0.0	0.0
2581.4	68.3	1181.6	241.9	182.3	23.8	1183.2	0.0	0.0
2591.4	68.1	1185.0	252.9	182.1	24.2	1181.3	0.0	0.0
2601.4	68.5	1183.9	255.9	181.8	24.0	1181.1	0.0	0.0
2611.4	68.7	1183.4	253.5	181.8	23.2	1179.5	0.0	0.0
2621.4	68.7	1183.4	249.3	182.0	22.2	1180.7	0.0	0.0
2631.4	68.5	1183.9	244.7	182.1	21.7	1181.4	0.0	0.0
2641.4	68.0	1182.4	241.2	182.3	21.9	1183.2	0.0	0.0
2651.4	67.5	1183.7	238.9	182.5	22.3	1182.0	0.0	0.0
2661.4	67.0	1185.1	237.8	182.6	22.2	1178.6	0.0	0.0
2671.4	66.7	1181.4	237.7	182.7	22.2	1181.8	0.0	0.0
2681.4	66.3	1184.0	238.1	182.9	22.3	1181.5	0.0	0.0
2691.4	66.1	1184.6	239.1	183.1	22.4	1183.6	0.0	0.0
2701.4	66.0	1181.8	240.3	183.2	22.6	1179.6	0.0	0.0
2711.4	65.9	1183.6	241.3	183.4	22.7	1181.7	0.0	0.0
2721.4	65.8	1183.9	241.9	183.5	22.8	1181.4	0.0	0.0
2731.4	65.7	1181.1	242.2	183.7	22.8	1182.7	0.0	0.0
2741.4	65.5	1184.7	242.3	183.8	22.9	1180.6	0.0	0.0
2751.4	65.3	1183.8	242.2	184.0	22.9	1179.0	0.0	0.0

Table 6.2.1-21 Break Mass and Energy Flow for the Long-term Cooling Phase of the DEPSG Break (Sheet 15 of 25)

Time (sec)	Break Flow (Reactor Vessel Side)				Break Flow (Steam Generator Side)			
	Steam		Liquid		Steam		Liquid	
	Mass (lbm/sec)	Enthalpy (Btu/lbm)	Mass (lbm/sec)	Enthalpy (Btu/lbm)	Mass (lbm/sec)	Enthalpy (Btu/lbm)	Mass (lbm/sec)	Enthalpy (Btu/lbm)
2761.4	65.2	1182.5	242.1	184.2	22.9	1182.4	0.0	0.0
2771.4	65.0	1183.1	242.1	184.3	22.9	1181.9	0.0	0.0
2781.4	64.8	1183.6	242.2	184.5	22.9	1181.9	0.0	0.0
2791.4	64.6	1182.7	242.4	184.6	22.9	1181.3	0.0	0.0
2801.4	64.5	1182.9	242.6	184.7	23.0	1180.3	0.0	0.0
2811.4	64.3	1183.5	242.8	184.9	23.0	1180.3	0.0	0.0
2821.4	64.1	1182.5	243.0	185.1	23.0	1179.8	0.0	0.0
2831.4	64.0	1181.3	243.3	185.2	23.0	1180.8	0.0	0.0
2841.4	63.7	1185.2	243.5	185.3	22.9	1183.4	0.0	0.0
2851.4	63.7	1182.1	243.7	185.5	22.7	1178.8	0.0	0.0
2861.4	63.5	1182.7	244.0	185.7	22.2	1180.7	0.0	0.0
2871.4	63.4	1183.0	244.2	185.9	21.8	1185.1	0.0	0.0
2881.4	63.2	1183.5	244.4	185.9	21.8	1178.9	0.0	0.0
2891.4	63.1	1182.3	244.4	186.1	22.0	1181.3	0.0	0.0
2901.4	62.8	1183.1	244.2	186.2	22.0	1180.0	0.0	0.0
2911.4	62.6	1183.7	244.0	186.4	21.9	1181.0	0.0	0.0
2921.4	62.5	1180.8	243.9	186.5	22.0	1181.3	0.0	0.0
2931.4	62.3	1183.0	243.9	186.7	22.1	1184.4	0.0	0.0
2941.4	62.2	1181.7	244.1	186.8	22.3	1177.0	0.0	0.0
2951.4	62.1	1183.6	244.4	186.9	22.4	1184.6	0.0	0.0
2961.4	62.0	1182.3	244.5	187.2	22.5	1179.9	0.0	0.0
2971.4	61.9	1182.6	244.7	187.2	22.5	1181.2	0.0	0.0
2981.4	61.8	1182.8	244.9	187.3	22.6	1179.1	0.0	0.0
2991.4	61.7	1183.1	244.9	187.5	22.6	1181.9	0.0	0.0
3001.4	61.5	1181.8	245.0	187.7	22.6	1179.3	0.0	0.0
3051.5	62.0	1182.6	234.7	188.1	19.9	1180.4	0.0	0.0
3101.6	62.0	1182.3	247.9	188.8	20.3	1180.9	0.0	0.0
3151.6	61.5	1182.4	250.3	189.4	19.9	1180.8	0.0	0.0
3201.7	60.9	1181.8	244.6	190.1	20.2	1180.1	0.0	0.0
3251.7	60.5	1182.3	250.9	190.7	20.8	1180.0	0.0	0.0
3301.7	58.9	1182.4	245.5	191.3	22.1	1181.0	0.0	0.0
3351.8	58.7	1181.5	247.4	192.0	20.2	1180.8	0.0	0.0
3401.9	57.7	1181.9	258.0	192.6	22.1	1178.9	0.0	0.0

Table 6.2.1-21 Break Mass and Energy Flow for the Long-term Cooling Phase of the DEPSG Break (Sheet 16 of 25)

Time (sec)	Break Flow (Reactor Vessel Side)				Break Flow (Steam Generator Side)			
	Steam		Liquid		Steam		Liquid	
	Mass (lbm/sec)	Enthalpy (Btu/lbm)	Mass (lbm/sec)	Enthalpy (Btu/lbm)	Mass (lbm/sec)	Enthalpy (Btu/lbm)	Mass (lbm/sec)	Enthalpy (Btu/lbm)
3452.0	58.1	1181.5	239.5	193.2	20.4	1181.4	0.0	0.0
3502.1	57.6	1181.6	256.2	193.8	20.5	1180.1	0.0	0.0
3552.2	57.3	1181.8	247.6	194.3	19.8	1179.8	0.0	0.0
3602.2	57.2	1181.6	250.0	194.9	19.1	1179.2	0.0	0.0
3652.3	56.0	1181.6	254.7	195.5	21.5	1180.5	0.0	0.0
3702.3	55.7	1181.2	248.7	196.0	20.6	1180.0	0.0	0.0
3752.3	55.4	1181.2	250.2	196.6	20.3	1179.1	0.0	0.0
3802.3	55.5	1181.1	247.6	197.0	18.9	1178.8	0.0	0.0
3852.3	55.1	1180.9	261.3	197.5	19.9	1179.9	0.0	0.0
3902.4	54.6	1181.3	250.2	198.1	19.2	1179.8	0.0	0.0
3952.4	54.0	1180.9	253.1	198.6	19.4	1179.6	0.0	0.0
4002.5	54.0	1180.7	251.7	199.0	18.9	1180.1	0.0	0.0
4052.5	53.6	1180.8	254.5	199.5	19.7	1178.5	0.0	0.0
4102.6	54.0	1180.9	247.5	200.0	18.1	1179.7	0.0	0.0
4152.7	53.4	1180.3	261.2	200.5	19.7	1180.2	0.0	0.0
4202.7	52.3	1180.4	245.1	200.8	18.5	1178.2	0.0	0.0
4252.7	53.3	1180.5	259.2	201.3	18.4	1179.0	0.0	0.0
4302.7	52.4	1180.8	262.7	201.7	19.5	1179.9	0.0	0.0
4352.8	52.2	1179.9	253.0	202.2	19.4	1179.0	0.0	0.0
4402.8	52.2	1180.6	253.6	202.6	18.7	1178.8	0.0	0.0
4452.9	51.9	1180.1	255.8	202.9	19.0	1177.9	0.0	0.0
4503.0	51.9	1180.5	259.0	203.3	18.8	1179.6	0.0	0.0
4553.1	51.5	1179.6	252.1	203.8	18.9	1178.1	0.0	0.0
4603.2	50.8	1180.3	260.1	204.1	19.3	1179.1	0.0	0.0
4653.2	50.7	1179.9	257.9	204.5	19.2	1179.0	0.0	0.0
4703.2	50.7	1180.0	248.7	204.8	18.0	1178.7	0.0	0.0
4753.2	50.4	1179.5	261.6	205.2	18.8	1178.2	0.0	0.0
4803.2	49.9	1180.0	260.4	205.5	19.4	1179.0	0.0	0.0
4853.3	50.6	1179.3	244.4	205.9	17.8	1177.7	0.0	0.0
4903.4	49.8	1180.0	263.9	206.2	18.8	1178.5	0.0	0.0
4953.4	49.9	1179.7	254.8	206.5	18.6	1178.7	0.0	0.0
5003.4	49.2	1179.3	263.8	206.9	19.2	1177.9	0.0	0.0
5053.5	49.3	1179.5	248.4	207.2	18.5	1178.4	0.0	0.0

Table 6.2.1-21 Break Mass and Energy Flow for the Long-term Cooling Phase of the DEPSG Break (Sheet 17 of 25)

Time (sec)	Break Flow (Reactor Vessel Side)				Break Flow (Steam Generator Side)			
	Steam		Liquid		Steam		Liquid	
	Mass (lbm/sec)	Enthalpy (Btu/lbm)	Mass (lbm/sec)	Enthalpy (Btu/lbm)	Mass (lbm/sec)	Enthalpy (Btu/lbm)	Mass (lbm/sec)	Enthalpy (Btu/lbm)
5103.6	48.9	1179.7	262.3	207.4	18.8	1178.3	0.0	0.0
5153.7	49.0	1179.4	260.2	207.8	18.5	1178.7	0.0	0.0
5203.7	48.7	1178.6	255.6	208.1	18.7	1177.7	0.0	0.0
5253.8	48.4	1179.7	261.1	208.4	18.4	1176.6	0.0	0.0
5303.9	47.9	1178.8	261.4	208.7	18.9	1178.8	0.0	0.0
5353.9	48.3	1179.4	254.5	208.9	17.8	1177.9	0.0	0.0
5403.9	47.8	1179.4	259.4	209.2	18.0	1176.9	0.0	0.0
5454.0	47.8	1178.6	259.8	209.5	18.2	1178.0	0.0	0.0
5504.1	47.6	1179.0	258.7	209.7	17.9	1177.5	0.0	0.0
5554.1	47.3	1179.0	258.3	210.0	18.2	1178.9	0.0	0.0
5604.2	47.4	1178.9	255.9	210.2	17.8	1176.9	0.0	0.0
5654.3	46.7	1178.5	267.4	210.4	18.5	1178.4	0.0	0.0
5704.3	47.1	1179.0	255.8	210.7	17.6	1177.3	0.0	0.0
5754.4	46.5	1178.8	259.1	211.0	18.1	1177.3	0.0	0.0
5804.4	46.8	1178.5	258.5	211.1	17.6	1177.7	0.0	0.0
5854.4	46.3	1178.2	261.4	211.4	17.7	1176.5	0.0	0.0
5904.5	46.0	1178.7	261.9	211.6	17.7	1177.7	0.0	0.0
5954.5	46.0	1178.7	266.6	211.8	18.2	1177.3	0.0	0.0
6004.6	46.3	1178.2	249.0	212.0	16.9	1177.7	0.0	0.0
6054.6	45.3	1178.5	268.5	212.3	18.0	1176.5	0.0	0.0
6104.7	45.6	1178.3	258.9	212.5	17.8	1176.6	0.0	0.0
6154.8	45.0	1178.3	268.7	212.5	18.2	1177.8	0.0	0.0
6204.9	45.3	1178.1	256.3	212.8	17.4	1176.6	0.0	0.0
6254.9	45.1	1178.1	260.0	213.1	17.3	1176.9	0.0	0.0
6304.9	45.7	1178.7	263.0	213.1	17.0	1177.0	0.0	0.0
6355.0	45.1	1177.5	260.5	213.2	17.2	1176.7	0.0	0.0
6405.0	44.9	1178.4	263.2	213.5	17.4	1176.8	0.0	0.0
6455.1	44.8	1178.0	259.8	213.8	17.3	1176.9	0.0	0.0
6505.1	44.8	1177.7	264.6	213.8	17.3	1176.9	0.0	0.0
6555.1	44.2	1178.2	263.5	214.0	17.6	1176.3	0.0	0.0
6605.2	44.6	1177.7	258.4	214.2	16.8	1177.6	0.0	0.0
6655.2	44.6	1177.7	262.9	214.2	16.8	1176.7	0.0	0.0
6705.3	44.5	1178.0	262.0	214.4	17.0	1175.1	0.0	0.0

Table 6.2.1-21 Break Mass and Energy Flow for the Long-term Cooling Phase of the DEPSG Break (Sheet 18 of 25)

Time (sec)	Break Flow (Reactor Vessel Side)				Break Flow (Steam Generator Side)			
	Steam		Liquid		Steam		Liquid	
	Mass (lbm/sec)	Enthalpy (Btu/lbm)	Mass (lbm/sec)	Enthalpy (Btu/lbm)	Mass (lbm/sec)	Enthalpy (Btu/lbm)	Mass (lbm/sec)	Enthalpy (Btu/lbm)
6755.3	44.4	1177.6	264.2	214.5	16.8	1176.7	0.0	0.0
6805.3	43.8	1177.2	266.3	214.7	17.5	1177.9	0.0	0.0
6855.3	44.6	1177.5	256.6	214.8	16.0	1175.0	0.0	0.0
6905.4	43.8	1177.8	266.2	215.1	17.1	1177.4	0.0	0.0
6955.5	44.0	1177.6	263.0	215.0	16.9	1175.4	0.0	0.0
7005.6	43.6	1177.4	261.9	215.3	16.9	1177.3	0.0	0.0
7055.6	43.7	1177.7	263.6	215.3	16.9	1174.9	0.0	0.0
7105.6	43.1	1177.3	267.6	215.5	17.2	1177.3	0.0	0.0
7155.7	43.2	1177.4	261.6	215.6	16.9	1175.9	0.0	0.0
7205.7	43.4	1177.3	260.1	215.7	16.3	1176.3	0.0	0.0
7255.7	43.4	1177.4	263.7	215.8	16.1	1175.7	0.0	0.0
7305.8	42.8	1177.0	267.7	215.8	17.0	1176.1	0.0	0.0
7355.9	42.8	1177.0	265.2	216.0	17.2	1175.4	0.0	0.0
7405.9	42.4	1177.4	262.4	216.0	17.0	1177.6	0.0	0.0
7456.0	43.2	1177.2	261.4	216.2	15.8	1174.5	0.0	0.0
7506.1	42.2	1176.9	270.1	216.3	17.3	1176.9	0.0	0.0
7556.1	43.3	1176.7	258.0	216.4	15.4	1174.3	0.0	0.0
7606.2	42.5	1177.6	264.9	216.4	16.3	1176.5	0.0	0.0
7656.3	42.6	1176.7	263.9	216.5	15.9	1175.7	0.0	0.0
7706.3	42.3	1177.2	266.8	216.8	16.4	1175.8	0.0	0.0
7756.4	42.3	1176.4	263.8	216.5	16.4	1177.0	0.0	0.0
7806.5	42.2	1177.2	270.1	216.9	15.8	1174.2	0.0	0.0
7856.5	42.0	1177.1	261.6	216.7	16.6	1176.9	0.0	0.0
7906.5	41.5	1176.6	270.6	217.0	17.0	1174.9	0.0	0.0
7956.6	41.9	1176.8	258.6	217.0	16.4	1175.4	0.0	0.0
8006.7	41.2	1176.4	271.2	217.1	16.3	1175.0	0.0	0.0
8056.7	41.6	1176.7	263.5	217.1	16.3	1175.7	0.0	0.0
8106.8	40.8	1177.1	264.1	217.0	17.2	1175.4	0.0	0.0
8156.8	41.5	1176.5	270.2	217.3	15.9	1176.5	0.0	0.0
8206.9	40.7	1176.4	264.1	217.2	16.6	1173.7	0.0	0.0
8257.0	40.9	1176.1	266.7	217.4	16.1	1176.2	0.0	0.0
8307.0	41.0	1176.9	266.2	217.3	16.0	1174.3	0.0	0.0
8357.1	41.0	1176.3	268.3	217.4	16.0	1176.3	0.0	0.0

Table 6.2.1-21 Break Mass and Energy Flow for the Long-term Cooling Phase of the DEPSG Break (Sheet 19 of 25)

Time (sec)	Break Flow (Reactor Vessel Side)				Break Flow (Steam Generator Side)			
	Steam		Liquid		Steam		Liquid	
	Mass (lbm/sec)	Enthalpy (Btu/lbm)	Mass (lbm/sec)	Enthalpy (Btu/lbm)	Mass (lbm/sec)	Enthalpy (Btu/lbm)	Mass (lbm/sec)	Enthalpy (Btu/lbm)
8407.2	40.8	1176.4	259.2	217.6	15.8	1175.3	0.0	0.0
8457.2	40.7	1176.6	268.6	217.5	16.5	1174.5	0.0	0.0
8507.3	40.3	1175.9	271.3	217.6	17.0	1175.1	0.0	0.0
8557.4	40.3	1176.4	263.7	217.5	16.6	1175.5	0.0	0.0
8607.4	40.3	1176.5	266.4	217.6	16.3	1175.7	0.0	0.0
8657.4	40.3	1175.7	265.0	217.7	15.8	1174.7	0.0	0.0
8707.4	40.4	1176.3	267.9	217.8	15.9	1174.6	0.0	0.0
8757.5	39.8	1176.6	272.6	217.6	16.3	1175.7	0.0	0.0
8807.6	40.5	1175.9	259.9	217.9	15.3	1174.3	0.0	0.0
8857.6	39.8	1176.1	270.4	217.7	16.3	1175.7	0.0	0.0
8907.7	40.3	1175.9	263.5	217.7	15.5	1174.2	0.0	0.0
8957.7	40.2	1176.1	271.4	217.8	16.0	1174.3	0.0	0.0
9007.8	39.6	1175.9	269.3	218.0	17.0	1174.9	0.0	0.0
9057.8	39.9	1175.8	263.3	217.8	15.4	1175.1	0.0	0.0
9107.8	39.7	1176.1	264.5	218.1	15.7	1174.3	0.0	0.0
9157.9	39.6	1175.7	272.7	217.8	15.6	1175.2	0.0	0.0
9207.9	39.8	1176.0	263.3	217.9	15.4	1174.5	0.0	0.0
9258.0	39.1	1175.5	272.5	217.9	16.0	1174.8	0.0	0.0
9308.0	39.6	1175.9	266.4	217.9	15.9	1174.4	0.0	0.0
9358.0	39.8	1175.9	266.4	217.9	15.6	1174.1	0.0	0.0
9408.1	39.0	1175.6	271.9	217.9	16.2	1175.1	0.0	0.0
9458.1	39.3	1176.0	261.1	217.9	15.4	1175.3	0.0	0.0
9508.2	38.9	1175.5	271.9	218.1	15.4	1173.6	0.0	0.0
9558.2	39.2	1175.8	268.5	217.9	15.3	1174.7	0.0	0.0
9608.3	39.3	1175.5	266.2	217.9	15.1	1174.8	0.0	0.0
9658.3	38.5	1176.0	277.2	218.0	16.1	1173.7	0.0	0.0
9708.4	39.0	1174.9	259.9	218.0	16.2	1174.4	0.0	0.0
9758.4	38.7	1175.9	267.4	217.9	15.8	1173.9	0.0	0.0
9808.5	38.7	1175.3	273.0	218.0	15.3	1174.7	0.0	0.0
9858.5	38.6	1175.4	264.0	217.9	15.2	1174.8	0.0	0.0
9908.6	38.2	1175.4	273.1	217.9	15.5	1174.2	0.0	0.0
9958.7	38.6	1175.6	271.8	217.9	15.1	1173.7	0.0	0.0
10008.7	38.7	1175.1	266.8	217.8	15.1	1174.6	0.0	0.0

Table 6.2.1-21 Break Mass and Energy Flow for the Long-term Cooling Phase of the DEPSG Break (Sheet 20 of 25)

Time (sec)	Break Flow (Reactor Vessel Side)				Break Flow (Steam Generator Side)			
	Steam		Liquid		Steam		Liquid	
	Mass (lbm/sec)	Enthalpy (Btu/lbm)	Mass (lbm/sec)	Enthalpy (Btu/lbm)	Mass (lbm/sec)	Enthalpy (Btu/lbm)	Mass (lbm/sec)	Enthalpy (Btu/lbm)
10508.8	38.0	1175.2	272.7	217.8	15.6	1173.8	0.0	0.0
11008.8	37.7	1174.9	273.3	217.6	15.2	1173.8	0.0	0.0
11508.8	37.3	1174.6	273.9	217.2	14.9	1173.4	0.0	0.0
12008.8	36.9	1174.5	274.4	216.8	14.7	1173.3	0.0	0.0
12508.9	36.3	1174.1	274.9	216.3	14.7	1172.9	0.0	0.0
13008.9	36.0	1173.9	275.6	215.7	14.4	1172.8	0.0	0.0
13508.9	35.7	1173.7	276.2	215.1	14.0	1172.4	0.0	0.0
14009.0	35.0	1173.5	276.8	214.4	14.1	1172.2	0.0	0.0
14509.1	34.6	1173.2	277.4	213.7	14.1	1172.0	0.0	0.0
15009.1	34.1	1172.9	278.1	213.0	13.9	1172.0	0.0	0.0
15509.2	33.8	1173.0	278.7	212.2	13.7	1171.7	0.0	0.0
16009.3	33.2	1172.5	279.1	211.4	13.8	1171.6	0.0	0.0
16509.3	33.1	1172.5	279.6	210.6	13.6	1171.2	0.0	0.0
17009.3	32.9	1172.3	280.2	209.8	13.4	1171.1	0.0	0.0
17509.3	32.4	1171.9	280.5	209.0	13.3	1170.9	0.0	0.0
18009.4	32.2	1171.7	281.0	208.1	13.1	1170.6	0.0	0.0
18509.5	32.0	1171.6	281.5	207.2	13.0	1170.6	0.0	0.0
19009.5	31.7	1171.5	282.1	206.4	12.9	1170.4	0.0	0.0
19509.5	31.3	1171.8	282.5	205.5	13.0	1170.1	0.0	0.0
20009.6	31.2	1171.6	283.0	204.7	12.6	1170.1	0.0	0.0
20509.6	31.1	1170.3	283.3	203.8	12.3	1169.8	0.0	0.0
21009.7	30.9	1170.4	283.7	203.0	12.4	1169.6	0.0	0.0
21509.7	30.6	1171.1	284.2	202.1	12.4	1169.5	0.0	0.0
22009.7	30.5	1170.1	284.4	201.3	12.2	1169.4	0.0	0.0
22509.8	30.3	1171.2	284.7	200.3	12.2	1169.2	0.0	0.0
23009.9	30.2	1170.4	285.1	199.5	12.1	1169.0	0.0	0.0
23509.9	30.1	1169.7	285.4	198.8	11.9	1169.0	0.0	0.0
24009.9	29.9	1169.7	285.7	197.8	11.8	1168.7	0.0	0.0
24509.9	29.9	1169.8	286.0	197.1	11.6	1168.7	0.0	0.0
25010.0	29.8	1170.5	286.3	196.3	11.4	1168.4	0.0	0.0
25510.0	29.6	1169.1	286.7	195.5	11.6	1168.3	0.0	0.0
26010.1	29.3	1169.3	287.0	194.7	11.6	1168.3	0.0	0.0
26510.1	28.7	1169.3	287.3	194.0	12.0	1168.3	0.0	0.0

Table 6.2.1-21 Break Mass and Energy Flow for the Long-term Cooling Phase of the DEPSG Break (Sheet 21 of 25)

Time (sec)	Break Flow (Reactor Vessel Side)				Break Flow (Steam Generator Side)			
	Steam		Liquid		Steam		Liquid	
	Mass (lbm/sec)	Enthalpy (Btu/lbm)	Mass (lbm/sec)	Enthalpy (Btu/lbm)	Mass (lbm/sec)	Enthalpy (Btu/lbm)	Mass (lbm/sec)	Enthalpy (Btu/lbm)
27010.1	28.8	1169.2	287.6	193.2	11.5	1168.0	0.0	0.0
27510.2	31.7	1169.2	288.2	192.4	7.8	1168.2	0.1	231.2
28010.2	34.3	1169.5	288.2	191.7	4.8	1167.8	0.0	0.0
28510.3	32.9	1169.0	288.4	190.8	6.2	1167.6	0.0	0.0
29010.4	31.2	1169.0	288.7	190.2	7.6	1167.8	0.0	0.0
29510.4	29.6	1169.7	289.0	189.5	9.0	1167.7	0.0	0.0
30010.4	28.0	1169.5	289.4	188.7	10.5	1167.3	0.0	0.0
30510.5	26.3	1170.1	289.4	187.9	11.9	1167.4	0.0	0.0
31010.5	24.9	1169.6	288.3	187.2	13.1	1167.3	0.0	0.0
31510.5	23.4	1169.8	290.0	186.6	14.4	1166.9	0.0	0.0
32010.5	22.1	1169.5	290.3	185.8	15.5	1167.1	0.0	0.0
32510.6	20.6	1169.9	290.5	185.2	16.8	1166.8	0.0	0.0
33010.6	19.1	1170.9	290.8	184.5	18.1	1166.8	0.0	0.0
33510.7	17.5	1169.9	291.0	183.7	19.4	1166.7	0.0	0.0
34010.7	16.0	1169.2	291.3	183.1	20.8	1166.6	0.0	0.0
34510.8	14.3	1171.5	291.4	182.4	22.2	1166.4	0.0	0.0
35010.8	12.7	1169.5	291.4	181.8	23.6	1166.4	0.0	0.0
35510.8	9.7	1170.4	283.0	181.3	26.2	1166.2	0.0	0.0
36010.8	6.9	1171.0	288.3	180.6	29.0	1166.2	0.0	0.0
36510.8	5.6	1167.3	287.8	179.9	30.1	1166.0	0.0	0.0
37010.8	4.5	1170.4	286.8	179.2	31.1	1166.0	0.0	0.0
37510.8	3.4	1169.6	285.2	178.6	31.9	1165.9	0.0	0.0
38010.9	2.2	1172.7	282.0	178.0	32.8	1165.9	0.0	0.0
38510.9	1.1	1150.9	272.6	177.4	33.8	1166.0	0.0	0.0
39011.0	0.1	1333.3	239.0	176.9	34.5	1165.9	0.0	0.0
39511.0	0.0	0.0	268.0	176.3	34.3	1166.0	0.0	0.0
40011.0	0.0	0.0	285.2	175.5	34.1	1166.0	0.0	0.0
40511.0	0.0	0.0	325.6	175.7	33.9	1166.0	0.0	0.0
41011.0	0.0	0.0	273.0	174.4	33.8	1166.1	0.0	0.0
41511.0	0.0	0.0	295.0	174.0	33.7	1166.1	0.0	0.0
42011.0	0.0	0.0	312.8	174.2	33.6	1166.1	0.0	0.0
42511.0	0.0	0.0	277.8	172.6	33.5	1166.1	0.0	0.0
43011.0	0.0	0.0	316.6	172.8	33.4	1166.1	0.0	0.0

Table 6.2.1-21 Break Mass and Energy Flow for the Long-term Cooling Phase of the DEPSG Break (Sheet 22 of 25)

Time (sec)	Break Flow (Reactor Vessel Side)				Break Flow (Steam Generator Side)			
	Steam		Liquid		Steam		Liquid	
	Mass (lbm/sec)	Enthalpy (Btu/lbm)	Mass (lbm/sec)	Enthalpy (Btu/lbm)	Mass (lbm/sec)	Enthalpy (Btu/lbm)	Mass (lbm/sec)	Enthalpy (Btu/lbm)
43511.0	0.0	0.0	289.0	172.3	33.2	1166.0	0.0	0.0
44011.0	0.0	0.0	281.6	171.1	33.2	1166.1	0.0	0.0
44511.0	0.0	0.0	337.6	171.6	33.0	1166.0	0.0	0.0
45011.0	0.0	0.0	266.8	170.2	33.0	1166.0	0.0	0.0
45511.0	0.0	0.0	284.4	169.7	32.9	1166.5	0.0	0.0
46011.0	0.0	0.0	333.8	170.2	32.7	1165.9	0.0	0.0
46511.0	0.0	0.0	269.8	168.6	32.6	1165.7	0.0	0.0
47011.0	0.0	0.0	287.4	168.1	32.5	1166.1	0.0	0.0
47511.0	0.0	0.0	327.2	169.0	32.3	1166.1	0.0	0.0
48011.0	0.0	0.0	275.6	167.2	32.3	1166.0	0.0	0.0
48511.0	0.0	0.0	302.4	167.0	32.2	1166.3	0.0	0.0
49011.0	0.0	0.0	308.8	167.4	32.1	1165.6	0.0	0.0
49511.0	0.0	0.0	281.0	166.0	32.0	1165.7	0.0	0.0
50011.0	0.0	0.0	330.8	166.3	31.8	1166.5	0.0	0.0
50511.0	0.0	0.0	277.8	165.5	31.8	1165.6	0.0	0.0
51011.0	0.0	0.0	285.2	164.7	31.7	1166.0	0.0	0.0
51511.0	0.0	0.0	337.0	165.4	31.5	1165.6	0.0	0.0
52011.0	0.0	0.0	270.2	164.0	31.5	1165.2	0.0	0.0
52511.0	0.0	0.0	288.4	163.5	31.4	1166.5	0.0	0.0
53011.0	0.0	0.0	329.8	164.3	31.2	1165.3	0.0	0.0
53511.0	0.0	0.0	276.6	162.7	31.2	1165.6	0.0	0.0
54011.0	0.0	0.0	303.8	162.6	31.1	1165.5	0.0	0.0
54511.0	0.0	0.0	310.2	163.0	30.9	1165.6	0.0	0.0
55011.0	0.0	0.0	282.8	161.6	30.9	1165.9	0.0	0.0
55511.0	0.0	0.0	333.6	162.1	30.7	1165.4	0.0	0.0
56011.0	0.0	0.0	277.8	161.2	30.6	1165.8	0.0	0.0
56511.0	0.0	0.0	287.2	160.5	30.6	1165.6	0.0	0.0
57011.0	0.0	0.0	336.6	161.3	30.4	1165.0	0.0	0.0
57511.0	0.0	0.0	273.2	160.0	30.4	1165.3	0.0	0.0
58011.0	0.0	0.0	292.0	159.5	30.3	1165.9	0.0	0.0
58511.0	0.0	0.0	327.4	160.4	30.1	1164.7	0.0	0.0
59011.0	0.0	0.0	280.2	158.7	30.1	1165.7	0.0	0.0
59511.0	0.0	0.0	315.6	159.0	30.0	1164.9	0.0	0.0

Table 6.2.1-21 Break Mass and Energy Flow for the Long-term Cooling Phase of the DEPSG Break (Sheet 23 of 25)

Time (sec)	Break Flow (Reactor Vessel Side)				Break Flow (Steam Generator Side)			
	Steam		Liquid		Steam		Liquid	
	Mass (lbm/sec)	Enthalpy (Btu/lbm)	Mass (lbm/sec)	Enthalpy (Btu/lbm)	Mass (lbm/sec)	Enthalpy (Btu/lbm)	Mass (lbm/sec)	Enthalpy (Btu/lbm)
60011.0	0.0	0.0	299.8	159.0	29.8	1165.7	0.0	0.0
60511.0	0.0	0.0	286.0	157.9	29.8	1165.1	0.0	0.0
61011.0	0.0	0.0	339.4	158.6	29.7	1165.2	0.0	0.0
61511.0	0.0	0.0	273.6	157.4	29.7	1164.5	0.0	0.0
62011.0	0.0	0.0	290.0	156.9	29.6	1165.0	0.0	0.0
62511.0	0.0	0.0	334.2	157.9	29.5	1165.6	0.0	0.0
63011.0	0.0	0.0	277.6	156.3	29.4	1165.1	0.0	0.0
63511.0	0.0	0.0	303.0	156.3	29.4	1164.7	0.0	0.0
64011.0	0.0	0.0	316.0	156.9	29.3	1164.6	0.0	0.0
64511.0	0.0	0.0	284.6	155.4	29.2	1164.8	0.0	0.0
65011.0	0.0	0.0	333.0	156.1	29.1	1164.7	0.0	0.0
65511.0	0.0	0.0	282.6	155.3	29.1	1164.9	0.0	0.0
66011.0	0.0	0.0	289.2	154.7	29.1	1164.5	0.0	0.0
66511.0	0.0	0.0	338.0	155.6	28.9	1164.5	0.0	0.0
67011.0	0.0	0.0	276.2	154.1	28.9	1165.4	0.0	0.0
67511.0	0.0	0.0	296.2	154.0	28.9	1164.2	0.0	0.0
68011.0	0.0	0.0	326.2	154.8	28.7	1164.2	0.0	0.0
68511.0	0.0	0.0	283.0	153.4	28.7	1164.3	0.0	0.0
69011.0	0.0	0.0	323.2	153.8	28.6	1164.9	0.0	0.0
69511.0	0.0	0.0	295.2	153.5	28.6	1164.5	0.0	0.0
70011.0	0.0	0.0	288.6	152.7	28.5	1164.8	0.0	0.0
70511.0	0.0	0.0	340.4	153.5	28.4	1164.0	0.0	0.0
71011.0	0.0	0.0	275.8	152.3	28.4	1164.1	0.0	0.0
71511.0	0.0	0.0	293.4	152.0	28.3	1164.4	0.0	0.0
72011.0	0.0	0.0	332.0	152.8	28.2	1164.4	0.0	0.0
72511.0	0.0	0.0	282.0	151.5	28.2	1164.5	0.0	0.0
73011.0	0.0	0.0	316.0	151.8	28.1	1163.5	0.0	0.0
73511.0	0.0	0.0	304.8	151.8	28.0	1164.8	0.0	0.0
74011.0	0.0	0.0	288.2	150.9	28.0	1163.5	0.0	0.0
74511.0	0.0	0.0	339.2	151.7	27.9	1164.9	0.0	0.0
75011.0	0.0	0.0	278.8	150.6	27.9	1163.4	0.0	0.0
75511.0	0.0	0.0	292.8	150.2	27.8	1163.9	0.0	0.0
76011.0	0.0	0.0	334.8	151.2	27.7	1164.5	0.0	0.0

Table 6.2.1-21 Break Mass and Energy Flow for the Long-term Cooling Phase of the DEPSG Break (Sheet 24 of 25)

Time (sec)	Break Flow (Reactor Vessel Side)				Break Flow (Steam Generator Side)			
	Steam		Liquid		Steam		Liquid	
	Mass (lbm/sec)	Enthalpy (Btu/lbm)	Mass (lbm/sec)	Enthalpy (Btu/lbm)	Mass (lbm/sec)	Enthalpy (Btu/lbm)	Mass (lbm/sec)	Enthalpy (Btu/lbm)
76511.0	0.0	0.0	281.4	149.9	27.7	1163.2	0.0	0.0
77011.0	0.0	0.0	310.4	149.9	27.6	1164.4	0.0	0.0
77511.0	0.0	0.0	312.8	150.4	27.5	1164.1	0.0	0.0
78011.0	0.0	0.0	287.8	149.1	27.5	1163.5	0.0	0.0
78511.0	0.0	0.0	337.0	150.0	27.4	1163.4	0.0	0.0
79011.0	0.0	0.0	283.0	149.1	27.4	1163.6	0.0	0.0
79511.0	0.0	0.0	292.4	148.6	27.3	1164.0	0.0	0.0
80011.0	0.0	0.0	337.4	149.5	27.2	1163.9	0.0	0.0
80511.0	0.0	0.0	281.0	148.3	27.2	1164.0	0.0	0.0
81011.0	0.0	0.0	306.0	148.3	27.2	1163.5	0.0	0.0
81511.0	0.0	0.0	319.2	148.9	27.1	1163.2	0.0	0.0
82011.0	0.0	0.0	287.4	147.7	27.1	1163.3	0.0	0.0
82511.0	0.0	0.0	334.2	148.3	27.0	1163.8	0.0	0.0
83011.0	0.0	0.0	287.6	147.7	27.0	1163.2	0.0	0.0
83511.0	0.0	0.0	292.2	147.2	26.9	1163.4	0.0	0.0
84011.0	0.0	0.0	339.4	148.0	26.8	1164.1	0.0	0.0
84511.0	0.0	0.0	280.4	146.9	26.8	1163.3	0.0	0.0
85011.0	0.0	0.0	303.6	146.7	26.8	1162.8	0.0	0.0
85511.0	0.0	0.0	323.2	147.5	26.7	1164.2	0.0	0.0
86011.0	0.0	0.0	287.4	146.2	26.7	1162.7	0.0	0.0
86511.0	0.0	0.0	331.6	146.9	26.6	1163.9	0.0	0.0
87011.0	0.0	0.0	291.6	146.3	26.6	1162.5	0.0	0.0
87511.0	0.0	0.0	292.2	145.9	26.5	1162.8	0.0	0.0
88011.0	0.0	0.0	339.8	146.7	26.4	1163.4	0.0	0.0
88511.0	0.0	0.0	281.2	145.5	26.5	1162.5	0.0	0.0
89011.0	0.0	0.0	303.2	145.4	26.4	1163.8	0.0	0.0
89511.0	0.0	0.0	324.6	146.2	26.3	1162.6	0.0	0.0
90011.0	0.0	0.0	287.6	145.0	26.3	1163.5	0.0	0.0
90511.0	0.0	0.0	331.8	145.6	26.2	1163.2	0.0	0.0
91011.0	0.0	0.0	292.4	145.0	26.2	1162.6	0.0	0.0
91511.0	0.0	0.0	292.8	144.5	26.2	1162.8	0.0	0.0
92011.0	0.0	0.0	339.2	145.5	26.1	1162.6	0.0	0.0
92511.0	0.0	0.0	282.4	144.3	26.1	1163.5	0.0	0.0

Table 6.2.1-21 Break Mass and Energy Flow for the Long-term Cooling Phase of the DEPSG Break (Sheet 25 of 25)

Time (sec)	Break Flow (Reactor Vessel Side)				Break Flow (Steam Generator Side)			
	Steam		Liquid		Steam		Liquid	
	Mass (lbm/sec)	Enthalpy (Btu/lbm)	Mass (lbm/sec)	Enthalpy (Btu/lbm)	Mass (lbm/sec)	Enthalpy (Btu/lbm)	Mass (lbm/sec)	Enthalpy (Btu/lbm)
93011.0	0.0	0.0	308.2	144.4	26.0	1163.0	0.0	0.0
93511.0	0.0	0.0	319.2	144.8	25.9	1162.7	0.0	0.0
94011.0	0.0	0.0	289.0	143.9	25.9	1162.7	0.0	0.0
94511.0	0.0	0.0	336.8	144.5	25.8	1163.3	0.0	0.0
95011.0	0.0	0.0	286.6	143.8	25.8	1161.8	0.0	0.0
95511.0	0.0	0.0	299.0	143.4	25.8	1162.9	0.0	0.0
96011.0	0.0	0.0	330.6	144.2	25.7	1162.5	0.0	0.0
96511.0	0.0	0.0	285.0	143.0	25.7	1162.6	0.0	0.0
97011.0	0.0	0.0	335.0	143.9	25.6	1162.4	0.0	0.0
97511.0	0.0	0.0	288.6	142.9	25.6	1163.3	0.0	0.0
98011.0	0.0	0.0	314.0	142.9	25.6	1162.8	0.0	0.0
98511.0	0.0	0.0	307.6	142.5	25.5	1162.1	0.0	0.0
99011.0	0.0	0.0	307.8	142.4	25.5	1163.1	0.0	0.0
99511.0	0.0	0.0	307.8	142.2	25.5	1161.7	0.0	0.0
100000.0	0.0	0.0	307.8	142.1	25.4	1162.4	0.0	0.0

Table 6.2.1-22 Elevations, Flow Areas, and Hydraulic Diameters used in Containment Mass and Energy Release Analyses

Component	Bottom Elevation[(a)] (ft)	Flow Area (ft^2)	Hydraulic Diameter (ft)
Hot Leg	28.1	5.2	2.6
Pump Suction Leg	17.7	5.2	2.6
Cold Leg	28.1	5.2	2.6
Reactor Coolant Pump	24.3	5.2	2.6
Pressurizer Surge Line	30.7	0.9	1.1
Steam Generator			
- Plenum	32.3	5.2	2.6
- Tubes	37.2	16.2	0.055
Reactor Vessel			
- Inlet Nozzle	28.1	5.2	2.6
- Downcomer	9.8	43.6	1.7
- Lower Plenum	0.0	68.0[(b)]	0.037[(b)]
- Core	9.8	68.0[(b)]	0.037[(b)]
- Upper Plenum	23.8	68.0[(b)]	0.037[(b)]
- Neutron Reflector	9.8	5.3	0.066
- Outlet Nozzle	28.1	5.2	2.6

Notes:
(a) Based on reactor vessel bottom elevation
(b) Represented by core component parameters

Table 6.2.1-23 Safety Injection Flow Rate for the DEPSG Break

Time (sec)	Flow Rate (lbm/sec)
0.0	0.0
120.9	0.0
122.9	344.1
150.9	344.0
200.9	344.0
250.9	344.1
263.8	344.1
264.3	336.2
300.3	336.0
400.7	335.3
500.9	334.9
1001.1	333.0
1501.3	331.2
2001.4	329.7
5003.4	324.6
10008.7	323.0
50011.0	330.5
100000.0	333.3

Table 6.2.1-24 Stored Energy Source for Mass and Energy Release for LOCA

Energy Source	Energy (Million Btu)
Reactor Coolant Internal Energy	441.38
Accumulator Internal Energy	47.09
Energy Stored in Core	43.45
Energy Stored in RCS Structure	267.87
Steam Generator Coolant Internal Energy	349.58
Energy Stored in Steam Generator Metal	138.16
RCS Total Contents	1287.54

Table 6.2.1-25 Description for Evaluations of Various Pipe Sizes and Break Locations for the Secondary Steam System Piping Failures (Includes Plant Power Levels)

Case No.	Break Type	Break Area*2	Initial Power	Failures in M&E Release Analysis			Offsite Power
				Main Feedwater Isolation Valve	Main Steam Check valve	One Safety Injection pump	
1	DEGB	1.4 ft^2	102 %	V	V	V	with
2			75 %	V	V	V	with
3			50 %	V	V	V	with
4			25 %	V	V	V	with
5			0 %	V	V	V	with
6	Split*1	1.65 ft^2	102 %	V	V	V	with
7		1.71 ft^2	0 %	V	V	V	with
8	DEGB	1.4 ft^2	102 %	V	V	V	without
9			0 %	V	V	V	without

Notes:

*1 Largest area that will not result in immediate main steam line isolation signal from low main steam line pressure. ECCS signal for split breaks occurs on high containment pressure, and steam isolation signal on high-high containment pressure.

*2 For Double-Ended Guillotine Break (DEGB), area is per loop prior to main steam line isolation and for faulted loop only after main steam line isolation.

For split break, area is shared by all loops prior to main steam line isolation. After main steam line isolation, A = 1.4 ft^2 for faulted loop.

Table 6.2.1-26 Mass and Energy Release Data for the Secondary Steam System Piping Failure Case 5 - Highest Containment Pressure (Sheet 1 of 5)

Time (sec)	Break Flow (upstream of the break)		Break Flow (downstream of the break)	
	Mass (lbm/sec)	Enthalpy (Btu/lbm)	Mass (lbm/sec)	Enthalpy (Btu/lbm)
0.0	0.0	0.0	0.0	0.0
0.1	3191.9	1189.2	21170.2	1184.7
0.2	3173.7	1189.5	21109.5	1184.9
0.3	3155.7	1189.7	21049.8	1185.0
0.4	3138.0	1189.9	20991.0	1185.1
0.5	3120.6	1190.2	20933.2	1185.2
0.6	3103.4	1190.4	20876.3	1185.3
0.7	3086.4	1190.6	20820.4	1185.3
0.8	3069.8	1190.8	20765.4	1185.4
0.9	3053.3	1191.0	20711.2	1185.5
1.0	3037.1	1191.2	20658.0	1185.6
1.2	3005.4	1191.6	20553.9	1185.8
1.4	2974.6	1192.0	20453.0	1185.9
1.6	2944.6	1192.4	20355.1	1186.1
1.8	2915.4	1192.7	20260.0	1186.2
2.0	2887.0	1193.1	20167.6	1186.3
2.2	2859.3	1193.4	20077.7	1186.4
2.4	2832.4	1193.7	19990.3	1186.5
2.6	2806.2	1194.0	19905.2	1186.6
2.8	2780.6	1194.3	19822.3	1186.7
3.0	2755.7	1194.6	19741.5	1186.8
3.2	2731.4	1194.9	19662.7	1186.9
3.4	2707.8	1195.2	19586.0	1187.0
3.6	2684.7	1195.4	19511.1	1187.1
3.8	2662.2	1195.7	19438.0	1187.2
4.0	2640.3	1195.9	19366.8	1187.2
4.2	2618.9	1196.2	7697.2	1196.7
4.4	2598.1	1196.4	7629.3	1197.0
4.6	2577.8	1196.6	7562.9	1197.2
4.8	2558.0	1196.8	7498.2	1197.4
5.0	2538.7	1197.0	7435.0	1197.7
5.2	2519.8	1197.2	7373.2	1197.9
5.4	2501.5	1197.4	7312.8	1198.1
5.6	2483.6	1197.6	7253.9	1198.3
5.8	2466.1	1197.8	7196.2	1198.5
6.0	2449.0	1198.0	7139.9	1198.6
6.2	2432.4	1198.1	7084.8	1198.8
6.4	2416.1	1198.3	7031.0	1199.0
6.6	2400.3	1198.4	6978.4	1199.2
6.8	2384.8	1198.6	6926.9	1199.3
7.0	2369.7	1198.7	6876.5	1199.5
7.2	2354.9	1198.9	6827.3	1199.6

Table 6.2.1-26 Mass and Energy Release Data for the Secondary Steam System Piping Failure Case 5 - Highest Containment Pressure (Sheet 2 of 5)

Time (sec)	Break Flow (upstream of the break)		Break Flow (downstream of the break)	
	Mass (lbm/sec)	Enthalpy (Btu/lbm)	Mass (lbm/sec)	Enthalpy (Btu/lbm)
7.4	2340.4	1199.0	6779.1	1199.8
7.6	2326.3	1199.2	6731.9	1199.9
7.8	2312.5	1199.3	6685.8	1200.0
8.0	2299.0	1199.4	6640.6	1200.2
8.2	2285.8	1199.5	6596.3	1200.3
8.4	2272.9	1199.6	6553.0	1200.4
8.6	2260.2	1199.8	6510.5	1200.6
8.8	2247.8	1199.9	6468.9	1200.7
9.0	2235.6	1200.0	6428.1	1200.8
9.2	2223.7	1200.1	6388.1	1200.9
9.4	2212.1	1200.2	6348.8	1201.0
9.6	2200.6	1200.3	6310.3	1201.1
9.8	2189.4	1200.4	6272.6	1201.2
10.0	2178.3	1200.5	6235.5	1201.3
10.2	2168.8	1200.6	0.0	0.0
10.4	2159.4	1200.6	0.0	0.0
10.6	2150.2	1200.7	0.0	0.0
10.8	2141.1	1200.8	0.0	0.0
11.0	2132.0	1200.9	0.0	0.0
11.5	2109.9	1201.1	0.0	0.0
12.0	2088.3	1201.2	0.0	0.0
12.5	2067.2	1201.4	0.0	0.0
13.0	2046.4	1201.6	0.0	0.0
13.5	2025.9	1201.7	0.0	0.0
14.0	2005.7	1201.9	0.0	0.0
14.5	1985.7	1202.0	0.0	0.0
15.0	1965.9	1202.1	0.0	0.0
15.5	1946.2	1202.3	0.0	0.0
16.0	1926.7	1202.4	0.0	0.0
16.5	1907.2	1202.5	0.0	0.0
17.0	1887.9	1202.7	0.0	0.0
17.5	1868.7	1202.8	0.0	0.0
18.0	1849.6	1202.9	0.0	0.0
18.5	1830.7	1203.0	0.0	0.0
19.0	1812.2	1203.1	0.0	0.0
19.5	1794.1	1203.2	0.0	0.0
20.0	1776.6	1203.3	0.0	0.0
20.5	1759.5	1203.4	0.0	0.0
21.0	1743.0	1203.5	0.0	0.0
21.5	1727.0	1203.6	0.0	0.0
22.0	1711.3	1203.7	0.0	0.0
22.5	1696.0	1203.8	0.0	0.0
23.0	1680.6	1203.8	0.0	0.0
23.5	1665.8	1203.9	0.0	0.0

Table 6.2.1-26 Mass and Energy Release Data for the Secondary Steam System Piping Failure Case 5 - Highest Containment Pressure (Sheet 3 of 5)

Time (sec)	Break Flow (upstream of the break)		Break Flow (downstream of the break)	
	Mass (lbm/sec)	Enthalpy (Btu/lbm)	Mass (lbm/sec)	Enthalpy (Btu/lbm)
24.0	1651.3	1204.0	0.0	0.0
24.5	1637.0	1204.0	0.0	0.0
25.0	1622.9	1204.1	0.0	0.0
25.5	1609.0	1204.1	0.0	0.0
26.0	1595.3	1204.2	0.0	0.0
26.5	1581.7	1204.2	0.0	0.0
27.0	1568.4	1204.3	0.0	0.0
27.5	1555.3	1204.3	0.0	0.0
28.0	1542.4	1204.4	0.0	0.0
28.5	1529.7	1204.4	0.0	0.0
29.0	1517.2	1204.5	0.0	0.0
29.5	1504.9	1204.5	0.0	0.0
30.0	1492.9	1204.5	0.0	0.0
30.5	1481.1	1204.6	0.0	0.0
31.0	1469.5	1204.6	0.0	0.0
31.5	1458.1	1204.6	0.0	0.0
32.0	1446.9	1204.6	0.0	0.0
32.5	1436.0	1204.7	0.0	0.0
33.0	1425.3	1204.7	0.0	0.0
33.5	1414.8	1204.7	0.0	0.0
34.0	1404.5	1204.7	0.0	0.0
34.5	1394.4	1204.7	0.0	0.0
35.0	1384.5	1204.7	0.0	0.0
35.5	1374.9	1204.7	0.0	0.0
36.0	1365.4	1204.8	0.0	0.0
36.5	1356.1	1204.8	0.0	0.0
37.0	1346.9	1204.8	0.0	0.0
37.5	1338.0	1204.8	0.0	0.0
38.0	1329.2	1204.8	0.0	0.0
38.5	1320.6	1204.8	0.0	0.0
39.0	1312.2	1204.8	0.0	0.0
39.5	1303.9	1204.8	0.0	0.0
40.0	1295.8	1204.8	0.0	0.0
40.5	1288.1	1204.8	0.0	0.0
41.0	1280.8	1204.8	0.0	0.0
41.5	1273.6	1204.8	0.0	0.0
42.0	1266.5	1204.8	0.0	0.0
42.5	1259.5	1204.8	0.0	0.0
43.0	1252.6	1204.8	0.0	0.0
43.5	1245.8	1204.8	0.0	0.0
44.0	1239.1	1204.8	0.0	0.0
44.5	1232.6	1204.8	0.0	0.0
45.0	1226.1	1204.8	0.0	0.0
45.5	1219.7	1204.7	0.0	0.0

Table 6.2.1-26 Mass and Energy Release Data for the Secondary Steam System Piping Failure Case 5 - Highest Containment Pressure (Sheet 4 of 5)

Time (sec)	Break Flow (upstream of the break)		Break Flow (downstream of the break)	
	Mass (lbm/sec)	Enthalpy (Btu/lbm)	Mass (lbm/sec)	Enthalpy (Btu/lbm)
46.0	1213.4	1204.7	0.0	0.0
46.5	1207.2	1204.7	0.0	0.0
47.0	1201.1	1204.7	0.0	0.0
47.5	1195.1	1204.7	0.0	0.0
48.0	1189.1	1204.7	0.0	0.0
48.5	1183.3	1204.7	0.0	0.0
49.0	1177.5	1204.7	0.0	0.0
49.5	1171.8	1204.7	0.0	0.0
50.0	1166.2	1204.7	0.0	0.0
55.0	1114.2	1204.5	0.0	0.0
60.0	1067.1	1204.3	0.0	0.0
65.0	1022.2	1204.1	0.0	0.0
70.0	985.3	1203.9	0.0	0.0
75.0	954.5	1203.7	0.0	0.0
80.0	928.9	1203.5	0.0	0.0
85.0	907.3	1203.3	0.0	0.0
90.0	889.0	1203.2	0.0	0.0
95.0	873.4	1203.0	0.0	0.0
100.0	859.9	1202.9	0.0	0.0
105.0	848.2	1202.8	0.0	0.0
110.0	837.7	1202.7	0.0	0.0
115.0	828.4	1202.6	0.0	0.0
120.0	819.9	1202.5	0.0	0.0
125.0	812.1	1202.4	0.0	0.0
130.0	805.0	1202.3	0.0	0.0
135.0	798.2	1202.2	0.0	0.0
140.0	791.7	1202.1	0.0	0.0
145.0	785.6	1202.1	0.0	0.0
150.0	779.6	1202.0	0.0	0.0
155.0	773.8	1201.9	0.0	0.0
160.0	768.1	1201.8	0.0	0.0
165.0	762.5	1201.7	0.0	0.0
170.0	757.0	1201.7	0.0	0.0
175.0	751.5	1201.6	0.0	0.0
180.0	746.1	1201.5	0.0	0.0
185.0	740.8	1201.4	0.0	0.0
190.0	735.4	1201.4	0.0	0.0
195.0	730.1	1201.3	0.0	0.0
200.0	724.8	1201.2	0.0	0.0
205.0	719.6	1201.1	0.0	0.0
210.0	714.3	1201.0	0.0	0.0
215.0	709.0	1201.0	0.0	0.0
220.0	703.8	1200.9	0.0	0.0
225.0	698.6	1200.8	0.0	0.0

Table 6.2.1-26 Mass and Energy Release Data for the Secondary Steam System Piping Failure Case 5 - Highest Containment Pressure (Sheet 5 of 5)

Time (sec)	Break Flow (upstream of the break)		Break Flow (downstream of the break)	
	Mass (lbm/sec)	Enthalpy (Btu/lbm)	Mass (lbm/sec)	Enthalpy (Btu/lbm)
230.0	693.4	1200.7	0.0	0.0
235.0	688.2	1200.6	0.0	0.0
240.0	683.0	1200.5	0.0	0.0
245.0	677.8	1200.4	0.0	0.0
250.0	672.6	1200.3	0.0	0.0
255.0	667.5	1200.2	0.0	0.0
260.0	662.3	1200.1	0.0	0.0
265.0	657.2	1200.0	0.0	0.0
270.0	652.1	1200.0	0.0	0.0
275.0	647.0	1199.9	0.0	0.0
280.0	641.9	1199.8	0.0	0.0
285.0	636.8	1199.7	0.0	0.0
290.0	631.7	1199.6	0.0	0.0
295.0	626.7	1199.4	0.0	0.0
300.0	621.7	1199.3	0.0	0.0
305.0	616.6	1199.2	0.0	0.0
310.0	611.7	1199.1	0.0	0.0
315.0	606.7	1199.0	0.0	0.0
320.0	601.7	1198.9	0.0	0.0
325.0	596.8	1198.8	0.0	0.0
330.0	591.9	1198.7	0.0	0.0
335.0	587.0	1198.6	0.0	0.0
340.0	582.1	1198.5	0.0	0.0
345.0	577.2	1198.4	0.0	0.0
350.0	572.4	1198.2	0.0	0.0
355.0	567.6	1198.1	0.0	0.0
360.0	562.8	1198.0	0.0	0.0
365.0	558.1	1197.9	0.0	0.0
370.0	553.4	1197.8	0.0	0.0
375.0	548.7	1197.6	0.0	0.0
380.0	544.0	1197.5	0.0	0.0
385.0	539.4	1197.4	0.0	0.0
390.0	534.8	1197.3	0.0	0.0
395.0	530.2	1197.1	0.0	0.0
400.0	472.4	1195.4	0.0	0.0
405.0	295.8	1187.3	0.0	0.0
410.0	165.1	1176.1	0.0	0.0
415.0	0.0	0.0	0.0	0.0
420.0	0.0	0.0	0.0	0.0
460.0	0.0	0.0	0.0	0.0
500.0	0.0	0.0	0.0	0.0

Table 6.2.1-27 Mass and Energy Release Data for the Secondary Steam System Piping Failure Case 1 - Highest Containment Temperature (Sheet 1 of 5)

Time (sec)	Break Flow (upstream of the break)		Break Flow (downstream of the break)	
	Mass (lbm/sec)	Enthalpy (Btu/lbm)	Mass (lbm/sec)	Enthalpy (Btu/lbm)
0.0	0.0	0.0	0.0	0.0
0.1	2736.0	1194.9	17704.9	1197.6
0.2	2727.0	1195.0	17674.9	1197.7
0.3	2718.2	1195.1	17645.4	1197.7
0.4	2709.6	1195.2	17616.5	1197.8
0.5	2701.1	1195.3	17588.1	1197.8
0.6	2692.8	1195.4	17560.3	1197.9
0.7	2684.5	1195.4	17533.0	1197.9
0.8	2676.5	1195.5	17506.2	1198.0
0.9	2668.5	1195.6	17479.9	1198.0
1.0	2660.7	1195.7	17454.0	1198.1
1.2	2645.4	1195.9	17403.5	1198.2
1.4	2630.6	1196.0	17354.8	1198.3
1.6	2616.2	1196.2	17307.6	1198.4
1.8	2602.2	1196.3	17261.8	1198.4
2.0	2588.6	1196.5	17217.5	1198.5
2.2	2575.4	1196.6	17174.4	1198.6
2.4	2562.6	1196.8	17132.6	1198.7
2.6	2550.1	1196.9	17092.0	1198.7
2.8	2537.9	1197.0	17052.5	1198.8
3.0	2526.0	1197.2	17014.1	1198.8
3.2	2514.5	1197.3	16976.8	1198.9
3.4	2503.2	1197.4	16940.4	1199.0
3.6	2492.3	1197.5	16905.0	1199.0
3.8	2481.6	1197.6	16870.5	1199.1
4.0	2471.2	1197.7	16836.9	1199.1
4.2	2461.1	1197.8	7304.1	1198.1
4.4	2451.2	1197.9	7272.2	1198.2
4.6	2441.5	1198.0	7241.2	1198.3
4.8	2432.1	1198.1	7210.9	1198.4
5.0	2423.0	1198.2	7181.3	1198.5
5.2	2414.0	1198.3	7152.5	1198.6
5.4	2405.3	1198.4	7124.5	1198.7
5.6	2396.8	1198.5	7097.1	1198.8
5.8	2388.5	1198.6	7070.4	1198.9
6.0	2380.4	1198.6	7044.3	1199.0
6.2	2372.5	1198.7	7019.0	1199.0
6.4	2364.8	1198.8	6994.2	1199.1
6.6	2357.3	1198.9	6970.0	1199.2
6.8	2349.9	1198.9	6946.4	1199.3
7.0	2342.7	1199.0	6923.4	1199.3
7.2	2335.7	1199.1	6901.0	1199.4

Table 6.2.1-27 Mass and Energy Release Data for the Secondary Steam System Piping Failure Case 1 - Highest Containment Temperature (Sheet 2 of 5)

Time (sec)	Break Flow (upstream of the break)		Break Flow (downstream of the break)	
	Mass (lbm/sec)	Enthalpy (Btu/lbm)	Mass (lbm/sec)	Enthalpy (Btu/lbm)
7.4	2328.9	1199.1	6879.1	1199.5
7.6	2322.2	1199.2	6857.7	1199.5
7.8	2315.6	1199.3	6836.9	1199.6
8.0	2309.2	1199.3	6816.5	1199.7
8.2	2303.0	1199.4	6796.7	1199.7
8.4	2296.9	1199.4	6777.2	1199.8
8.6	2290.9	1199.5	6758.3	1199.8
8.8	2285.0	1199.5	6739.7	1199.9
9.0	2279.3	1199.6	6721.6	1199.9
9.2	2273.6	1199.6	6703.7	1200.0
9.4	2268.1	1199.7	6686.2	1200.0
9.6	2262.6	1199.7	6668.9	1200.1
9.8	2257.3	1199.8	6651.9	1200.1
10.0	2252.0	1199.8	6635.1	1200.2
10.2	2246.8	1199.9	6618.5	1200.2
10.4	2241.6	1199.9	6602.0	1200.3
10.6	2236.5	1200.0	6585.5	1200.3
10.8	2231.4	1200.0	6569.0	1200.4
11.0	2226.3	1200.1	6552.4	1200.4
11.5	2218.0	1200.1	0.0	0.0
12.0	2209.2	1200.2	0.0	0.0
12.5	2199.7	1200.3	0.0	0.0

Time (sec)	Break Flow (upstream of the break)		Break Flow (downstream of the break)	
	Mass (lbm/sec)	Enthalpy (Btu/lbm)	Mass (lbm/sec)	Enthalpy (Btu/lbm)
13.0	2189.2	1200.4	0.0	0.0
13.5	2177.7	1200.5	0.0	0.0
14.0	2165.0	1200.6	0.0	0.0
14.5	2151.3	1200.7	0.0	0.0
15.0	2136.5	1200.8	0.0	0.0
15.5	2120.8	1201.0	0.0	0.0
16.0	2104.1	1201.1	0.0	0.0
16.5	2086.7	1201.2	0.0	0.0
17.0	2068.6	1201.4	0.0	0.0
17.5	2049.9	1201.5	0.0	0.0
18.0	2030.7	1201.7	0.0	0.0
18.5	2011.2	1201.8	0.0	0.0
19.0	1991.4	1202.0	0.0	0.0
19.5	1971.4	1202.1	0.0	0.0
20.0	1951.4	1202.2	0.0	0.0
20.5	1931.4	1202.4	0.0	0.0
21.0	1911.5	1202.5	0.0	0.0
21.5	1891.7	1202.6	0.0	0.0
22.0	1872.2	1202.8	0.0	0.0
22.5	1853.0	1202.9	0.0	0.0
23.0	1834.1	1203.0	0.0	0.0
23.5	1815.6	1203.1	0.0	0.0

Table 6.2.1-27 Mass and Energy Release Data for the Secondary Steam System Piping Failure Case 1 - Highest Containment Temperature (Sheet 3 of 5)

Time (sec)	Break Flow (upstream of the break)		Break Flow (downstream of the break)	
	Mass (lbm/sec)	Enthalpy (Btu/lbm)	Mass (lbm/sec)	Enthalpy (Btu/lbm)
24.0	1797.5	1203.2	0.0	0.0
24.5	1779.7	1203.3	0.0	0.0
25.0	1762.4	1203.4	0.0	0.0
25.5	1745.5	1203.5	0.0	0.0
26.0	1729.0	1203.6	0.0	0.0
26.5	1713.0	1203.7	0.0	0.0
27.0	1697.3	1203.8	0.0	0.0
27.5	1681.6	1203.8	0.0	0.0
28.0	1666.7	1203.9	0.0	0.0
28.5	1652.3	1204.0	0.0	0.0
29.0	1638.2	1204.0	0.0	0.0
29.5	1624.4	1204.1	0.0	0.0
30.0	1611.0	1204.1	0.0	0.0
30.5	1598.0	1204.2	0.0	0.0
31.0	1585.3	1204.2	0.0	0.0
31.5	1572.9	1204.3	0.0	0.0
32.0	1560.8	1204.3	0.0	0.0
32.5	1549.1	1204.4	0.0	0.0
33.0	1537.7	1204.4	0.0	0.0
33.5	1526.6	1204.4	0.0	0.0
34.0	1515.7	1204.5	0.0	0.0
34.5	1505.2	1204.5	0.0	0.0
35.0	1495.0	1204.5	0.0	0.0
35.5	1485.1	1204.5	0.0	0.0
36.0	1475.4	1204.6	0.0	0.0
36.5	1466.0	1204.6	0.0	0.0
37.0	1456.9	1204.6	0.0	0.0
37.5	1448.1	1204.6	0.0	0.0
38.0	1439.5	1204.7	0.0	0.0
38.5	1431.2	1204.7	0.0	0.0
39.0	1423.1	1204.7	0.0	0.0
39.5	1415.3	1204.7	0.0	0.0
40.0	1407.7	1204.7	0.0	0.0
40.5	1400.4	1204.7	0.0	0.0
41.0	1393.2	1204.7	0.0	0.0
41.5	1386.3	1204.7	0.0	0.0
42.0	1379.6	1204.7	0.0	0.0
42.5	1373.1	1204.8	0.0	0.0
43.0	1366.9	1204.8	0.0	0.0
43.5	1360.8	1204.8	0.0	0.0
44.0	1354.9	1204.8	0.0	0.0
44.5	1349.2	1204.8	0.0	0.0
45.0	1343.7	1204.8	0.0	0.0
45.5	1338.3	1204.8	0.0	0.0

Table 6.2.1-27 Mass and Energy Release Data for the Secondary Steam System Piping Failure Case 1 - Highest Containment Temperature (Sheet 4 of 5)

Time (sec)	Break Flow (upstream of the break)		Break Flow (downstream of the break)	
	Mass (lbm/sec)	Enthalpy (Btu/lbm)	Mass (lbm/sec)	Enthalpy (Btu/lbm)
46.0	1333.2	1204.8	0.0	0.0
46.5	1328.2	1204.8	0.0	0.0
47.0	1323.4	1204.8	0.0	0.0
47.5	1318.8	1204.8	0.0	0.0
48.0	1314.3	1204.8	0.0	0.0
48.5	1310.0	1204.8	0.0	0.0
49.0	1305.8	1204.8	0.0	0.0
49.5	1301.8	1204.8	0.0	0.0
50.0	1297.9	1204.8	0.0	0.0
55.0	1268.1	1204.8	0.0	0.0
60.0	1247.0	1204.8	0.0	0.0
65.0	1231.8	1204.8	0.0	0.0
70.0	1220.6	1204.8	0.0	0.0
75.0	1211.7	1204.7	0.0	0.0
80.0	1205.0	1204.7	0.0	0.0
85.0	1200.0	1204.7	0.0	0.0
90.0	1196.0	1204.7	0.0	0.0
95.0	1192.8	1204.7	0.0	0.0
100.0	1190.1	1204.7	0.0	0.0
105.0	1187.8	1204.7	0.0	0.0
110.0	1185.8	1204.7	0.0	0.0
115.0	1184.1	1204.7	0.0	0.0
120.0	1182.5	1204.7	0.0	0.0
125.0	1181.1	1204.7	0.0	0.0
130.0	1179.9	1204.7	0.0	0.0
135.0	1178.7	1204.7	0.0	0.0
140.0	1177.7	1204.7	0.0	0.0
145.0	1176.8	1204.7	0.0	0.0
150.0	1175.9	1204.7	0.0	0.0
155.0	1175.2	1204.7	0.0	0.0
160.0	1174.5	1204.7	0.0	0.0
165.0	1173.9	1204.7	0.0	0.0
170.0	1173.3	1204.7	0.0	0.0
175.0	1172.8	1204.7	0.0	0.0
180.0	1168.8	1204.6	0.0	0.0
185.0	1085.9	1204.4	0.0	0.0
190.0	947.6	1203.6	0.0	0.0
195.0	472.4	1195.4	0.0	0.0
200.0	243.8	1183.7	0.0	0.0
205.0	0.0	0.0	0.0	0.0
210.0	0.0	0.0	0.0	0.0
215.0	0.0	0.0	0.0	0.0
220.0	0.0	0.0	0.0	0.0
225.0	0.0	0.0	0.0	0.0

Table 6.2.1-27 Mass and Energy Release Data for the Secondary Steam System Piping Failure Case 1 - Highest Containment Temperature (Sheet 5 of 5)

Time (sec)	Break Flow (upstream of the break)		Break Flow (downstream of the break)	
	Mass (lbm/sec)	Enthalpy (Btu/lbm)	Mass (lbm/sec)	Enthalpy (Btu/lbm)
230.0	0.0	0.0	0.0	0.0
235.0	0.0	0.0	0.0	0.0
240.0	0.0	0.0	0.0	0.0
245.0	0.0	0.0	0.0	0.0
250.0	0.0	0.0	0.0	0.0

Time (sec)	Break Flow (upstream of the break)		Break Flow (downstream of the break)	
	Mass (lbm/sec)	Enthalpy (Btu/lbm)	Mass (lbm/sec)	Enthalpy (Btu/lbm)
300.0	0.0	0.0	0.0	0.0
350.0	0.0	0.0	0.0	0.0
400.0	0.0	0.0	0.0	0.0
450.0	0.0	0.0	0.0	0.0
500.0	0.0	0.0	0.0	0.0

Table 6.2.1-28 Break Mass and Energy Flow for the Double Ended Guillotine Break Resulting in the Minimum Containment Pressures for use in ECCS Evaluation (Sheet 1 of 24)

Time (sec)	Break Flow		Spilled Flow	
	Mass (lbm/sec)	Enthalpy (Btu/ lbm)	Mass (lbm/sec)	Enthalpy (Btu/lbm)
0.0	11729.1	547.9	0.0	0.0
0.5	102761.6	543.7	3815.9	41.9
1.0	96588.0	545.2	3755.6	50.6
1.5	87975.5	548.3	3641.0	43.6
2.0	76104.0	552.8	3535.2	41.1
2.5	64405.6	557.0	3440.6	40.8
3.0	56091.5	560.3	3353.9	40.8
3.5	52346.2	565.0	3274.2	40.8
4.0	49159.4	573.3	3199.9	40.8
4.5	46395.2	581.8	3128.8	40.8
5.0	44239.0	586.7	3058.3	40.8
5.5	42475.0	591.9	2993.7	40.8
6.0	40789.3	598.2	2940.6	40.8
6.5	39028.7	605.8	2888.7	40.8
7.0	36897.2	616.0	2839.0	40.8
7.5	34891.0	626.9	2792.0	40.8
8.0	33376.4	632.7	2747.2	40.8
8.5	31906.9	637.8	2703.6	40.8
9.0	30653.2	641.4	2659.7	40.8
9.5	29299.1	647.7	2616.5	40.8
10.0	27573.1	658.8	2578.9	40.8
10.5	26368.0	663.5	2544.5	40.8
11.0	24647.3	678.2	2511.0	40.8
11.5	22720.6	697.7	2478.7	40.8
12.0	20764.1	722.3	2447.8	40.8
12.5	18757.6	755.5	2418.0	40.8
13.0	17276.9	779.5	2388.6	40.8
13.5	16117.6	796.2	2359.6	40.8
14.0	15021.6	813.2	2331.0	40.8
14.5	14247.6	816.2	2304.6	40.8
15.0	13731.3	803.1	2281.0	40.8
15.5	13538.1	768.7	2258.3	40.8
16.0	13748.1	714.2	2236.4	40.8
16.5	13513.5	676.4	2215.3	40.8

Table 6.2.1-28 Break Mass and Energy Flow for the Double Ended Guillotine Break Resulting in the Minimum Containment Pressures for use in ECCS Evaluation (Sheet 2 of 24)

Time (sec)	Break Flow		Spilled Flow	
	Mass (lbm/sec)	Enthalpy (Btu/ lbm)	Mass (lbm/sec)	Enthalpy (Btu/lbm)
17.0	13578.2	632.5	2194.9	40.8
17.5	13134.8	605.7	2175.2	40.8
18.0	12203.3	588.7	2155.6	40.8
18.5	11152.7	579.9	2135.9	40.8
19.0	11632.6	531.1	2116.1	40.8
19.5	11404.3	503.6	2096.9	40.8
20.0	9223.8	530.7	2080.3	40.8
20.5	8808.9	502.7	2064.6	40.8
21.0	9869.3	426.4	2049.2	40.8
21.5	9758.4	400.8	2034.1	40.8
22.0	9025.7	381.7	2019.6	40.7
22.5	11117.9	335.9	2005.5	40.7
23.0	10630.1	315.2	1991.7	40.7
23.5	11742.5	289.7	1978.1	40.7
24.0	10850.3	280.5	1964.3	40.7
24.5	5209.6	340.1	1950.4	40.7
25.0	9099.3	280.1	1936.8	40.7
25.5	7975.8	277.6	1924.1	40.7
26.0	7249.6	278.0	1912.5	40.7
26.5	6673.0	275.6	1900.7	40.7
27.0	5833.4	260.8	1889.1	40.7
27.5	7240.0	216.2	1877.8	40.7
28.0	7149.7	207.1	1866.9	40.7
28.5	5177.7	220.6	1856.2	40.7
29.0	6550.4	201.8	1845.7	40.7
29.5	5662.3	207.1	1835.2	40.7
30.0	426.6	525.9	1824.5	40.7
30.5	947.7	251.4	1813.3	40.7
31.0	55.0	1278.9	1802.1	40.7
31.5	85.0	1285.7	1791.5	40.7
32.0	92.8	1280.0	1782.0	40.7
32.5	84.6	1279.7	1772.5	40.7
33.0	83.9	1281.1	1763.1	40.7
33.5	96.7	1280.3	1753.8	40.7

Table 6.2.1-28 Break Mass and Energy Flow for the Double Ended Guillotine Break Resulting in the Minimum Containment Pressures for use in ECCS Evaluation (Sheet 3 of 24)

Time (sec)	Break Flow		Spilled Flow	
	Mass (lbm/sec)	Enthalpy (Btu/ lbm)	Mass (lbm/sec)	Enthalpy (Btu/lbm)
34.0	99.4	1277.2	1744.7	40.7
34.5	96.1	1277.0	1735.8	40.7
35.0	93.6	1277.8	1727.1	40.6
35.5	89.9	1278.4	1718.1	40.6
36.0	76.7	1279.5	1708.9	40.6
36.5	37.3	1281.4	1682.3	40.6
37.0	43.8	1285.2	658.0	40.6
37.5	62.6	1286.9	474.5	40.6
38.0	77.6	1284.7	391.1	40.6
38.5	68.8	1282.2	375.0	40.6
39.0	65.2	1283.2	375.2	40.6
39.5	53.6	1284.1	375.0	40.6
40.0	64.1	1285.8	374.6	40.6
40.5	159.0	1249.7	374.2	40.6
41.0	373.1	738.4	373.9	40.6
41.5	2534.5	174.3	373.5	40.6
42.0	2485.1	161.0	373.1	40.6
42.5	1145.9	190.7	372.8	40.6
43.0	72.0	1104.4	372.4	40.6
43.5	297.2	651.6	372.0	40.6
44.0	1215.1	284.1	371.7	40.6
44.5	2375.7	188.8	371.3	40.6
45.0	4263.4	142.4	370.9	40.6
45.5	1887.8	169.5	370.6	40.6
46.0	392.6	369.5	370.2	40.6
46.5	355.0	512.6	369.8	40.6
47.0	921.5	326.3	369.5	40.5
47.5	1386.2	250.3	369.1	40.5
48.0	3501.4	148.5	368.8	40.5
48.5	4762.1	132.3	368.4	40.5
49.0	3596.8	133.9	368.1	40.5
49.5	2172.7	147.5	367.7	40.5
50.0	1894.7	159.9	367.4	40.5
50.5	3478.2	149.9	367.0	40.5

Table 6.2.1-28 Break Mass and Energy Flow for the Double Ended Guillotine Break Resulting in the Minimum Containment Pressures for use in ECCS Evaluation (Sheet 4 of 24)

Time (sec)	Break Flow		Spilled Flow	
	Mass (lbm/sec)	Enthalpy (Btu/ lbm)	Mass (lbm/sec)	Enthalpy (Btu/lbm)
51.0	1386.7	263.6	366.6	40.5
51.5	1819.4	199.5	366.3	40.5
52.0	5019.2	133.6	365.9	40.5
52.5	5079.1	129.8	365.6	40.5
53.0	3625.6	137.4	365.2	40.5
53.5	2409.1	153.5	364.9	40.5
54.0	2874.5	148.6	364.5	40.5
54.5	5555.8	132.4	364.2	40.5
55.0	1967.6	224.5	363.8	40.5
55.5	3994.4	168.4	363.5	40.5
56.0	3932.4	162.4	363.1	40.5
56.5	4003.8	155.1	362.7	40.5
57.0	6084.2	140.8	362.4	40.5
57.5	6235.9	145.9	362.0	40.5
58.0	1434.2	263.3	361.6	40.5
58.5	940.5	365.0	361.3	40.5
59.0	1926.3	271.0	360.9	40.5
59.5	1346.2	325.8	360.2	40.5
60.0	905.9	355.6	360.0	40.5
60.5	1034.7	332.6	359.8	40.5
61.0	762.8	379.8	359.0	40.5
61.5	468.0	493.6	359.3	40.5
62.0	449.7	620.7	358.2	40.5
62.5	438.9	669.6	358.6	40.5
63.0	444.1	559.7	357.7	40.5
63.5	2569.4	216.2	357.7	40.5
64.0	1195.3	317.4	357.3	40.5
64.5	456.1	505.1	356.6	40.5
65.0	314.1	618.4	356.8	40.5
65.5	345.2	669.3	355.7	40.5
66.0	370.0	751.4	356.0	40.5
66.5	402.0	697.5	355.1	40.5
67.0	1001.5	296.3	355.0	40.5
67.5	1581.5	273.5	354.6	40.5

Table 6.2.1-28 Break Mass and Energy Flow for the Double Ended Guillotine Break Resulting in the Minimum Containment Pressures for use in ECCS Evaluation (Sheet 5 of 24)

Time (sec)	Break Flow		Spilled Flow	
	Mass (lbm/sec)	Enthalpy (Btu/ lbm)	Mass (lbm/sec)	Enthalpy (Btu/lbm)
68.0	831.9	376.7	354.0	40.5
68.5	388.8	543.4	354.0	40.5
69.0	310.0	623.3	353.3	40.5
69.5	351.4	716.5	353.2	40.5
70.0	320.3	803.1	352.9	40.4
70.5	349.9	691.9	352.4	40.4
71.0	386.9	483.5	352.6	40.4
71.5	1066.7	315.5	351.6	40.4
72.0	662.0	396.9	352.0	40.4
72.5	326.7	578.7	351.0	40.4
73.0	311.4	666.5	351.2	40.4
73.5	339.0	744.2	350.7	40.4
74.0	294.3	773.2	350.3	40.4
74.5	324.3	645.0	350.3	40.4
75.0	491.1	477.6	349.5	40.4
75.5	387.6	534.7	349.0	40.4
76.0	300.6	608.3	348.9	40.4
76.5	285.6	644.9	348.6	40.4
77.0	351.8	691.8	348.4	40.4
77.5	316.7	790.9	348.5	40.4
78.0	426.9	541.3	347.7	40.4
78.5	1335.0	286.0	347.2	40.4
79.0	1080.5	329.1	346.9	40.4
79.5	537.2	453.5	346.5	40.4
80.0	353.9	581.5	346.6	40.4
80.5	351.7	585.4	346.2	40.4
81.0	376.2	642.6	345.9	40.4
81.5	314.5	737.7	345.9	40.4
82.0	366.6	619.7	345.1	40.4
82.5	531.8	445.2	344.6	40.4
83.0	793.3	372.5	344.3	40.4
83.5	496.1	476.3	344.1	40.4
84.0	370.2	570.4	344.3	40.4
84.5	379.3	556.0	343.8	40.4

Table 6.2.1-28 Break Mass and Energy Flow for the Double Ended Guillotine Break Resulting in the Minimum Containment Pressures for use in ECCS Evaluation (Sheet 6 of 24)

Time (sec)	Break Flow		Spilled Flow	
	Mass (lbm/sec)	Enthalpy (Btu/lbm)	Mass (lbm/sec)	Enthalpy (Btu/lbm)
85.0	423.7	558.7	343.4	40.4
85.5	343.9	677.7	343.2	40.4
86.0	367.9	614.9	342.5	40.4
86.5	428.4	543.7	342.2	40.4
87.0	443.4	516.3	341.9	40.4
87.5	485.9	488.1	341.8	40.4
88.0	481.6	489.2	342.0	40.4
88.5	465.6	494.7	341.3	40.4
89.0	454.6	502.9	340.8	40.3
89.5	432.7	522.3	340.7	40.3
90.0	454.6	533.4	340.0	40.3
90.5	474.2	535.5	339.8	40.3
91.0	587.2	440.0	339.8	40.3
91.5	1519.1	284.2	339.1	40.3
92.0	1150.3	326.5	338.7	40.3
92.5	1019.6	349.9	338.7	40.3
93.0	1109.7	333.7	338.2	40.3
93.5	1360.2	318.1	337.7	40.3
94.0	976.8	365.3	337.7	40.3
94.5	864.3	382.0	337.3	40.3
95.0	1015.5	345.8	336.7	40.3
95.5	1506.3	306.8	336.7	40.3
96.0	1243.0	325.6	336.4	40.3
96.5	881.9	386.7	335.8	40.3
97.0	602.2	472.7	335.7	40.3
97.5	825.6	386.6	335.6	40.3
98.0	1276.7	314.3	334.9	40.3
98.5	1558.7	300.1	334.7	40.3
99.0	1383.4	314.0	334.7	40.3
99.5	1343.7	318.2	334.0	40.3
100.0	1002.5	373.9	333.8	40.3
100.5	716.7	431.1	333.8	40.3
101.0	1652.1	286.9	333.2	40.3
101.5	1511.5	302.5	332.8	40.3

Table 6.2.1-28 Break Mass and Energy Flow for the Double Ended Guillotine Break Resulting in the Minimum Containment Pressures for use in ECCS Evaluation (Sheet 7 of 24)

Time (sec)	Break Flow		Spilled Flow	
	Mass (lbm/sec)	Enthalpy (Btu/ lbm)	Mass (lbm/sec)	Enthalpy (Btu/lbm)
102.0	1385.1	314.9	332.9	40.3
102.5	1267.9	327.1	332.4	40.3
103.0	855.3	403.9	331.9	40.3
103.5	711.8	433.6	332.0	40.3
104.0	1090.3	334.8	331.6	40.3
104.5	1613.2	298.6	331.0	40.3
105.0	1433.5	311.1	331.0	40.3
105.5	1246.0	330.8	330.8	40.3
106.0	772.0	421.9	330.1	40.2
106.5	676.5	446.3	330.1	40.2
107.0	900.6	372.5	330.0	40.2
107.5	1884.0	281.3	329.3	40.2
108.0	1454.4	311.2	329.2	40.2
108.5	1069.0	351.2	329.2	40.2
109.0	636.1	466.5	328.5	40.2
109.5	633.9	454.8	328.3	40.2
110.0	845.5	387.9	328.3	40.2
110.5	1850.6	275.4	327.8	40.2
111.0	1437.9	311.1	327.4	40.2
111.5	1053.2	350.5	327.5	40.2
112.0	606.4	469.3	327.0	40.2
112.5	556.8	497.8	326.5	40.2
113.0	527.8	499.6	326.6	40.2
113.5	1329.1	299.6	326.3	40.2
114.0	1585.3	304.1	325.7	40.2
114.5	1257.2	327.8	325.8	40.2
115.0	723.0	425.7	325.5	40.2
115.5	570.4	489.2	324.9	40.2
116.0	544.5	492.0	324.9	40.2
116.5	719.6	413.2	324.8	40.2
117.0	822.1	369.8	324.1	40.2
117.5	1268.4	316.9	324.0	40.2
118.0	935.8	367.7	324.0	40.2
118.5	617.1	467.7	323.3	40.2

Table 6.2.1-28 Break Mass and Energy Flow for the Double Ended Guillotine Break Resulting in the Minimum Containment Pressures for use in ECCS Evaluation (Sheet 8 of 24)

Time (sec)	Break Flow		Spilled Flow	
	Mass (lbm/sec)	Enthalpy (Btu/ lbm)	Mass (lbm/sec)	Enthalpy (Btu/lbm)
119.0	609.8	461.8	323.1	40.2
119.5	607.2	462.5	323.1	40.2
120.0	890.8	362.4	322.6	40.2
120.5	1367.3	310.9	322.2	40.2
121.0	1081.2	341.5	322.2	40.2
121.5	683.3	424.9	321.8	40.2
122.0	551.7	484.6	321.3	40.2
122.5	603.9	469.5	321.3	40.2
123.0	704.8	417.2	321.0	40.1
123.5	1106.4	333.6	320.4	40.1
124.0	1352.6	313.2	320.4	40.1
124.5	1072.8	343.7	320.2	40.1
125.0	720.9	411.7	319.6	40.1
125.5	597.8	480.4	319.5	40.1
126.0	558.4	462.5	319.4	40.1
126.5	1739.1	256.6	318.8	40.1
127.0	1428.3	280.4	318.7	40.1
127.5	1280.1	298.9	318.6	40.1
128.0	1114.7	321.6	318.0	40.1
128.5	834.0	376.6	317.8	40.1
129.0	724.6	410.9	317.8	40.1
129.5	914.1	312.9	317.3	40.1
130.0	2002.0	232.8	317.0	40.1
130.5	1822.8	243.3	317.1	40.1
131.0	1444.1	272.2	316.6	40.1
131.5	1355.0	289.2	316.2	40.1
132.0	1294.6	319.0	316.3	40.1
132.5	645.1	431.5	315.9	40.1
133.0	1743.9	230.7	315.4	40.1
133.5	2067.3	221.8	315.5	40.1
134.0	1986.8	241.9	315.2	40.1
134.5	1442.3	272.9	314.6	40.1
135.0	1556.1	268.5	314.6	40.1
135.5	1643.3	271.6	314.5	40.1

Table 6.2.1-28 Break Mass and Energy Flow for the Double Ended Guillotine Break Resulting in the Minimum Containment Pressures for use in ECCS Evaluation (Sheet 9 of 24)

Time (sec)	Break Flow		Spilled Flow	
	Mass (lbm/sec)	Enthalpy (Btu/ lbm)	Mass (lbm/sec)	Enthalpy (Btu/lbm)
136.0	1827.5	259.2	313.9	40.1
136.5	1935.7	252.2	313.8	40.1
137.0	1832.7	257.8	313.8	40.1
137.5	1810.2	261.2	313.2	40.1
138.0	1851.7	258.1	313.0	40.1
138.5	1725.1	261.9	313.0	40.1
139.0	1862.0	258.8	312.5	40.1
139.5	1769.6	264.9	312.2	40.1
140.0	1867.5	256.7	312.2	40.0
140.5	1880.0	254.3	311.8	40.0
141.0	1908.4	252.3	311.4	40.0
141.5	1861.8	251.9	311.5	40.0
142.0	1842.7	250.5	311.2	40.0
142.5	1794.8	254.7	310.6	40.0
143.0	1897.3	251.9	310.7	40.0
143.5	1937.0	249.1	310.5	40.0
144.0	1906.1	248.3	310.0	40.0
144.5	2028.7	243.9	310.0	40.0
145.0	2001.7	242.6	309.9	40.0
145.5	2028.9	242.1	309.4	40.0
146.0	2055.1	242.0	309.3	40.0
146.5	2084.1	240.8	309.3	40.0
147.0	2082.0	240.2	308.8	40.0
147.5	2089.2	239.0	308.7	40.0
148.0	2178.4	236.6	308.8	40.0
148.5	2119.6	238.0	308.4	40.0
149.0	2182.2	236.0	308.2	40.0
149.5	2196.4	235.2	308.4	40.0
150.0	2194.9	233.4	308.0	40.0
150.5	2246.5	232.6	307.7	40.0
151.0	2290.4	230.4	307.9	40.0
151.5	2213.1	232.1	307.7	40.0
152.0	2147.2	234.4	306.3	40.0
152.5	2073.1	236.2	307.1	40.0

Table 6.2.1-28 Break Mass and Energy Flow for the Double Ended Guillotine Break Resulting in the Minimum Containment Pressures for use in ECCS Evaluation (Sheet 10 of 24)

Time (sec)	Break Flow		Spilled Flow	
	Mass (lbm/sec)	Enthalpy (Btu/ lbm)	Mass (lbm/sec)	Enthalpy (Btu/lbm)
153.0	2090.5	235.4	306.9	40.0
153.5	2046.4	236.3	306.5	40.0
154.0	2067.8	234.7	306.4	40.0
154.5	2127.1	231.9	306.4	40.0
155.0	2096.9	230.7	306.5	40.0
155.5	1919.0	240.2	305.9	40.0
156.0	1976.4	237.5	305.3	40.0
156.5	1967.3	236.5	306.2	40.0
157.0	1795.6	246.9	306.1	39.9
157.5	1793.7	245.9	304.9	39.9
158.0	1760.8	246.9	305.5	39.9
158.5	1737.8	249.1	304.2	39.9
159.0	1693.4	251.9	304.3	39.9
159.5	1688.9	251.8	303.9	39.9
160.0	1701.9	251.8	303.3	39.9
160.5	1691.3	251.4	303.7	39.9
161.0	1665.4	252.3	303.2	39.9
161.5	1651.5	253.7	302.3	39.9
162.0	1704.6	249.5	302.4	39.9
162.5	1800.8	244.5	301.9	39.9
163.0	1706.1	249.7	301.7	39.9
163.5	1930.0	239.5	301.3	39.9
164.0	2206.7	228.0	301.4	39.9
164.5	1962.5	241.4	300.7	39.9
165.0	1960.1	240.6	300.6	39.9
165.5	1927.2	241.4	300.1	39.9
166.0	1880.5	244.1	300.1	39.9
166.5	1817.6	246.5	299.6	39.9
167.0	1804.6	247.9	298.7	39.9
167.5	1822.1	248.0	298.7	39.9
168.0	1776.3	249.4	297.3	39.9
168.5	1739.1	250.8	296.1	39.9
169.0	1757.7	250.3	295.0	39.9
169.5	1779.4	247.8	294.0	39.9

Table 6.2.1-28 Break Mass and Energy Flow for the Double Ended Guillotine Break Resulting in the Minimum Containment Pressures for use in ECCS Evaluation (Sheet 11 of 24)

Time (sec)	Break Flow		Spilled Flow	
	Mass (lbm/sec)	Enthalpy (Btu/ lbm)	Mass (lbm/sec)	Enthalpy (Btu/lbm)
170.0	1644.2	255.8	291.8	39.9
170.5	1634.6	254.2	290.5	39.9
171.0	1618.0	255.4	288.5	39.9
171.5	1676.4	251.7	286.8	39.9
172.0	1596.5	256.6	285.3	39.9
172.5	1504.4	263.1	280.2	39.9
173.0	1539.6	258.8	278.1	39.9
173.5	1514.0	261.7	277.4	39.9
174.0	1365.4	275.9	274.6	39.9
174.5	1394.9	270.4	270.9	40.0
175.0	1305.3	281.4	268.3	40.0
175.5	1248.2	282.7	266.3	40.0
176.0	1320.9	274.2	263.7	40.0
176.5	1263.7	283.3	260.7	40.0
177.0	1122.8	303.6	257.9	40.0
177.5	1057.7	313.1	255.5	40.0
178.0	1091.0	319.7	253.1	40.0
178.5	932.3	363.5	250.5	40.0
179.0	690.7	415.2	247.9	40.0
179.5	677.1	419.5	245.5	40.0
180.0	709.5	409.2	243.3	40.1
180.5	750.1	397.6	241.2	40.1
181.0	740.5	398.7	239.2	40.1
181.5	673.7	411.0	237.3	40.1
182.0	654.2	416.4	235.5	40.1
182.5	637.4	419.9	234.0	40.1
183.0	650.4	415.5	232.7	40.1
183.5	673.5	406.4	231.7	40.2
184.0	694.3	394.2	230.9	40.2
184.5	674.6	387.3	230.5	40.2
185.0	902.4	340.5	230.4	40.2
185.5	786.6	366.2	230.6	40.2
186.0	640.7	402.4	231.4	40.3
186.5	577.6	420.4	232.7	40.3

Table 6.2.1-28 Break Mass and Energy Flow for the Double Ended Guillotine Break Resulting in the Minimum Containment Pressures for use in ECCS Evaluation (Sheet 12 of 24)

Time (sec)	Break Flow		Spilled Flow	
	Mass (lbm/sec)	Enthalpy (Btu/ lbm)	Mass (lbm/sec)	Enthalpy (Btu/lbm)
187.0	558.3	425.8	234.6	40.3
187.5	553.1	432.6	237.2	40.3
188.0	567.2	421.4	240.6	40.4
188.5	609.8	406.6	245.0	40.4
189.0	585.5	407.2	250.4	40.4
189.5	552.4	414.7	257.1	40.5
190.0	482.0	438.6	265.3	40.5
190.5	437.3	467.2	275.1	40.6
191.0	436.2	470.4	286.8	40.6
191.5	484.7	443.6	300.6	40.7
192.0	538.9	421.2	316.5	40.8
192.5	542.6	410.4	334.2	40.9
193.0	586.8	399.4	353.1	41.1
193.5	586.6	396.8	371.6	41.4
194.0	592.5	395.8	386.4	41.7
194.5	613.2	386.0	392.1	42.3
195.0	595.9	387.8	381.2	43.3
195.5	574.7	391.3	345.8	45.3
196.0	533.3	403.9	282.9	49.4
196.5	496.4	416.6	202.1	58.0
197.0	502.2	420.1	126.4	72.6
197.5	492.2	417.6	92.9	87.0
198.0	552.3	405.2	101.8	90.3
198.5	555.6	390.8	111.7	91.9
199.0	643.4	371.8	119.6	95.3
199.5	622.6	374.6	120.9	102.0
200.0	562.2	391.3	114.9	113.7
200.5	560.9	404.0	103.4	131.8
201.0	510.9	416.9	89.6	157.8
201.5	555.4	409.7	76.1	192.7
202.0	550.3	404.7	64.3	236.8
202.5	519.1	392.3	54.7	289.5
203.0	1188.4	254.5	47.1	349.3
203.5	945.3	294.3	41.1	414.3

Table 6.2.1-28 Break Mass and Energy Flow for the Double Ended Guillotine Break Resulting in the Minimum Containment Pressures for use in ECCS Evaluation (Sheet 13 of 24)

Time (sec)	Break Flow		Spilled Flow	
	Mass (lbm/sec)	Enthalpy (Btu/ lbm)	Mass (lbm/sec)	Enthalpy (Btu/lbm)
204.0	1130.5	276.3	36.4	481.8
204.5	1034.3	286.9	32.7	549.0
205.0	1214.9	266.9	29.8	613.1
205.5	1150.3	266.0	27.6	671.9
206.0	1468.1	236.3	25.8	723.9
206.5	1353.5	239.9	24.4	768.4
207.0	1479.9	234.5	23.4	805.5
207.5	1529.1	222.5	22.5	835.6
208.0	1590.6	222.9	21.9	859.6
208.5	1475.7	235.5	21.3	878.5
209.0	1629.2	220.9	15.1	892.0
209.5	1848.6	211.1	15.5	900.8
210.0	1653.5	223.2	15.3	908.2
210.5	1665.1	230.9	15.2	914.5
211.0	1627.5	230.9	15.2	919.6
211.5	1636.1	236.0	15.0	924.0
212.0	1742.5	221.9	14.8	927.4
212.5	1775.3	226.6	14.7	930.2
213.0	1678.0	229.2	14.6	932.5
213.5	1841.9	222.5	14.5	934.1
214.0	1638.7	239.8	14.4	934.9
214.5	1764.6	219.2	14.3	935.3
215.0	1865.9	217.9	14.2	935.4
215.5	1698.3	226.7	14.1	935.2
216.0	1891.9	216.4	14.0	935.0
216.5	1758.9	228.3	13.9	934.7
217.0	1857.8	222.2	13.9	934.3
217.5	1756.2	233.4	13.8	933.8
218.0	1829.2	221.6	13.7	933.3
218.5	1899.1	221.7	13.7	932.8
219.0	1912.5	216.5	13.6	932.3
219.5	2025.1	209.4	13.5	931.7
220.0	2002.7	216.2	13.4	931.2
220.5	2088.4	211.8	13.4	930.6

Table 6.2.1-28 Break Mass and Energy Flow for the Double Ended Guillotine Break Resulting in the Minimum Containment Pressures for use in ECCS Evaluation (Sheet 14 of 24)

Time (sec)	Break Flow		Spilled Flow	
	Mass (lbm/sec)	Enthalpy (Btu/ lbm)	Mass (lbm/sec)	Enthalpy (Btu/lbm)
221.0	2247.2	205.1	13.3	930.1
221.5	2069.6	214.7	13.2	929.5
222.0	2290.8	203.8	13.1	928.9
222.5	2433.9	201.5	13.1	928.4
223.0	2465.2	200.6	13.0	927.8
223.5	2403.1	207.3	12.9	927.3
224.0	2442.1	205.8	12.9	926.7
224.5	2584.4	213.6	12.8	926.2
225.0	2316.6	225.4	12.7	925.7
225.5	2439.3	211.8	12.7	925.2
226.0	2548.0	215.3	12.6	924.7
226.5	2597.8	219.6	12.5	924.2
227.0	2545.6	232.5	12.4	923.7
227.5	2127.2	240.7	12.4	923.2
228.0	2778.7	221.3	12.3	922.7
228.5	2349.3	275.4	12.2	922.3
229.0	1324.6	357.0	12.2	921.8
229.5	1839.7	279.2	12.1	921.4
230.0	2134.2	254.1	12.0	921.0
230.5	1581.4	332.1	12.0	920.5
231.0	1454.7	330.0	11.9	920.1
231.5	1415.4	346.8	11.8	919.7
232.0	1548.5	317.5	11.8	919.3
232.5	1508.8	338.0	11.7	918.9
233.0	1461.0	342.7	11.6	918.5
233.5	1344.3	369.0	11.6	918.1
234.0	1457.3	329.1	11.5	917.8
234.5	1453.7	346.5	11.4	917.4
235.0	1385.7	343.8	11.4	917.0
235.5	1497.9	324.3	11.3	916.7
236.0	1606.5	321.9	11.2	916.3
236.5	1286.4	374.2	11.2	916.0
237.0	1342.2	358.0	11.1	915.7
237.5	1443.4	337.0	11.0	915.3

Table 6.2.1-28 Break Mass and Energy Flow for the Double Ended Guillotine Break Resulting in the Minimum Containment Pressures for use in ECCS Evaluation (Sheet 15 of 24)

Time (sec)	Break Flow		Spilled Flow	
	Mass (lbm/sec)	Enthalpy (Btu/ lbm)	Mass (lbm/sec)	Enthalpy (Btu/lbm)
238.0	1239.9	384.4	11.0	915.0
238.5	1424.0	334.1	10.9	914.7
239.0	1513.6	307.7	10.8	914.4
239.5	1535.4	329.7	10.8	914.1
240.0	1355.5	348.7	10.7	913.8
240.5	1512.7	307.8	10.6	913.5
241.0	1399.1	351.9	10.6	913.2
241.5	1337.3	352.5	10.5	912.9
242.0	1473.8	317.2	10.4	912.7
242.5	1430.6	336.9	10.4	912.4
243.0	1351.5	338.1	10.3	912.1
243.5	1539.7	313.3	10.2	911.9
244.0	1428.3	326.2	10.2	911.6
244.5	1486.7	319.5	10.1	911.3
245.0	1365.1	347.9	10.1	911.1
245.5	1513.8	315.5	10.0	910.9
246.0	1330.7	354.0	9.9	910.6
246.5	1447.6	309.0	9.9	910.4
247.0	1467.1	336.6	9.8	910.1
247.5	1286.8	358.8	9.8	909.9
248.0	1401.0	333.5	9.7	909.7
248.5	1350.8	335.9	9.6	909.5
249.0	1369.1	338.3	9.6	909.3
249.5	1284.1	345.8	9.5	909.0
250.0	1424.3	314.9	9.4	908.8
250.5	1446.3	325.4	9.4	908.6
251.0	1211.4	368.0	9.3	908.4
251.5	1331.8	335.0	9.3	908.2
252.0	1130.6	394.1	9.2	908.0
252.5	1184.5	358.5	9.2	907.8
253.0	1287.7	339.2	9.1	907.6
253.5	1085.2	402.9	9.0	907.5
254.0	1010.6	414.8	9.0	907.3
254.5	951.6	450.8	8.9	907.1

Table 6.2.1-28 Break Mass and Energy Flow for the Double Ended Guillotine Break Resulting in the Minimum Containment Pressures for use in ECCS Evaluation (Sheet 16 of 24)

Time (sec)	Break Flow		Spilled Flow	
	Mass (lbm/sec)	Enthalpy (Btu/ lbm)	Mass (lbm/sec)	Enthalpy (Btu/lbm)
255.0	871.1	453.9	8.9	906.9
255.5	935.3	432.5	8.8	906.7
256.0	847.2	473.3	8.7	906.6
256.5	931.4	419.3	8.7	906.4
257.0	1002.5	405.3	8.6	906.2
257.5	831.4	488.0	8.6	906.1
258.0	828.2	452.0	8.5	905.9
258.5	918.6	437.5	8.5	905.7
259.0	863.9	463.3	8.4	905.6
259.5	864.7	431.7	8.4	905.4
260.0	965.0	409.5	8.3	905.3
260.5	931.8	421.9	8.2	905.1
261.0	783.5	492.1	8.2	905.0
261.5	927.3	403.7	8.1	904.8
262.0	1060.1	384.0	8.1	904.7
262.5	890.4	449.8	8.0	904.5
263.0	715.8	536.3	8.0	904.4
263.5	911.9	407.9	7.9	904.3
264.0	851.2	462.8	7.9	904.1
264.5	668.1	579.7	7.8	904.0
265.0	763.5	479.2	7.8	903.9
265.5	782.3	469.9	7.7	903.7
266.0	831.3	462.9	7.7	903.6
266.5	697.7	537.8	7.6	903.5
267.0	645.9	549.5	7.5	903.4
267.5	705.8	520.9	7.5	903.2
268.0	661.8	535.3	7.4	903.1
268.5	700.2	525.5	7.4	903.0
269.0	631.1	563.2	7.3	902.9
269.5	610.3	586.4	7.3	902.8
270.0	567.2	629.2	7.2	902.7
270.5	502.0	689.5	7.2	902.6
271.0	444.0	794.3	7.1	902.4
271.5	231.6	1218.5	7.1	902.3

Table 6.2.1-28 Break Mass and Energy Flow for the Double Ended Guillotine Break Resulting in the Minimum Containment Pressures for use in ECCS Evaluation (Sheet 17 of 24)

Time (sec)	Break Flow		Spilled Flow	
	Mass (lbm/sec)	Enthalpy (Btu/ lbm)	Mass (lbm/sec)	Enthalpy (Btu/lbm)
272.0	227.1	1210.4	7.0	902.2
272.5	220.5	1209.9	7.0	902.1
273.0	216.7	1210.4	6.9	902.0
273.5	218.7	1211.6	6.9	901.9
274.0	209.8	1209.3	6.8	901.8
274.5	230.9	1214.0	6.8	901.7
275.0	287.5	1077.2	6.7	901.6
275.5	287.4	1078.8	6.7	901.5
276.0	221.5	1208.5	6.6	901.4
276.5	228.7	1210.3	6.6	901.3
277.0	222.1	1208.8	6.6	901.3
277.5	217.7	1209.2	6.5	901.2
278.0	219.2	1189.2	6.5	901.1
278.5	213.9	1210.1	6.4	901.0
279.0	218.9	1211.3	6.4	900.9
279.5	223.9	1208.5	6.3	900.8
280.0	232.2	1171.8	6.3	900.7
280.5	245.3	1160.4	6.2	900.7
281.0	221.7	1205.3	6.2	900.6
281.5	216.1	1207.8	6.1	900.5
282.0	214.9	1208.6	6.1	900.4
282.5	208.2	1209.7	6.0	900.3
283.0	209.8	1197.5	6.0	900.3
283.5	218.2	1213.7	5.9	900.2
284.0	217.4	1210.7	5.9	900.2
284.5	216.3	1209.6	5.8	900.2
285.0	211.3	1212.0	5.8	900.2
285.5	204.2	1211.0	5.7	900.2
286.0	205.0	1213.6	5.7	900.2
286.5	200.8	1210.9	5.6	900.2
287.0	217.0	1208.9	5.6	900.2
287.5	212.6	1212.9	5.5	900.2
288.0	208.2	1212.7	5.5	900.2
288.5	197.7	1211.0	5.4	900.2

Table 6.2.1-28 Break Mass and Energy Flow for the Double Ended Guillotine Break Resulting in the Minimum Containment Pressures for use in ECCS Evaluation (Sheet 18 of 24)

Time (sec)	Break Flow		Spilled Flow	
	Mass (lbm/sec)	Enthalpy (Btu/ lbm)	Mass (lbm/sec)	Enthalpy (Btu/lbm)
289.0	212.4	1218.5	5.4	900.2
289.5	205.4	1213.5	5.3	900.2
290.0	204.2	1213.4	5.3	900.2
290.5	201.6	1213.7	5.2	900.2
291.0	211.2	1214.6	5.2	900.2
291.5	218.8	1211.4	5.2	900.2
292.0	286.1	1038.9	5.1	900.2
292.5	223.4	1175.3	5.1	900.2
293.0	790.3	390.1	5.0	900.2
293.5	249.9	1118.5	5.0	900.2
294.0	214.9	1208.4	4.9	900.2
294.5	214.2	1205.4	4.9	900.2
295.0	224.7	1204.5	4.8	900.2
295.5	225.1	1204.1	4.8	900.2
296.0	216.8	1199.8	4.8	900.2
296.5	232.3	1200.4	4.7	900.2
297.0	226.1	1194.9	4.7	900.2
297.5	234.2	1196.6	4.6	900.2
298.0	258.3	1159.8	4.6	900.2
298.5	240.0	1196.3	4.5	900.2
299.0	229.5	1191.9	4.5	900.2
299.5	240.6	1200.0	4.5	900.2
300.0	230.2	1193.0	4.4	900.2
300.5	236.5	1197.9	4.4	900.2
301.0	230.4	1195.6	4.3	900.2
301.5	236.1	1202.4	4.3	900.2
302.0	236.9	1198.4	4.3	900.2
302.5	239.4	1203.4	4.2	900.2
303.0	227.5	1201.3	4.2	900.2
303.5	232.4	1207.0	4.1	900.2
304.0	226.3	1206.3	4.1	900.2
304.5	230.2	1206.8	4.1	900.2
305.0	226.2	1207.5	4.0	900.2
305.5	232.8	1210.2	4.0	900.2

Table 6.2.1-28 Break Mass and Energy Flow for the Double Ended Guillotine Break Resulting in the Minimum Containment Pressures for use in ECCS Evaluation (Sheet 19 of 24)

Time (sec)	Break Flow		Spilled Flow	
	Mass (lbm/sec)	Enthalpy (Btu/ lbm)	Mass (lbm/sec)	Enthalpy (Btu/lbm)
306.0	230.5	1210.7	3.9	900.2
306.5	228.5	1209.7	3.9	900.2
307.0	224.7	1211.2	3.9	900.2
307.5	214.3	1210.3	3.8	900.2
308.0	224.2	1215.4	3.8	900.2
308.5	220.9	1211.4	3.7	900.2
309.0	232.3	1215.3	3.7	900.2
309.5	216.0	1209.7	3.7	900.2
310.0	222.1	1214.1	3.6	900.2
310.5	227.7	1214.9	3.6	900.2
311.0	215.3	1210.7	3.6	900.2
311.5	228.5	1216.0	3.5	900.2
312.0	224.0	1211.0	3.5	900.2
312.5	233.4	1210.7	3.4	900.2
313.0	230.1	1212.0	3.4	900.2
313.5	260.9	1166.6	3.4	900.2
314.0	786.1	386.7	3.3	900.2
314.5	1084.7	318.4	3.3	900.2
315.0	1243.7	255.8	3.3	900.2
315.5	937.6	395.8	3.2	900.2
316.0	972.9	351.9	3.2	900.2
316.5	1438.1	258.9	3.2	900.2
317.0	945.1	398.4	3.1	900.2
317.5	1149.7	308.3	3.1	900.2
318.0	1420.6	289.7	3.1	900.2
318.5	1074.6	353.8	3.0	900.2
319.0	1369.5	287.7	3.0	900.2
319.5	1255.0	318.2	3.0	900.2
320.0	1321.9	310.0	2.9	900.2
320.5	1308.2	303.1	2.9	900.2
321.0	1263.7	324.0	2.9	900.2
321.5	1255.2	316.3	2.8	900.2
322.0	1481.3	276.0	2.8	900.2
322.5	1238.8	333.2	2.8	900.2

Table 6.2.1-28 Break Mass and Energy Flow for the Double Ended Guillotine Break Resulting in the Minimum Containment Pressures for use in ECCS Evaluation (Sheet 20 of 24)

Time (sec)	Break Flow		Spilled Flow	
	Mass (lbm/sec)	Enthalpy (Btu/ lbm)	Mass (lbm/sec)	Enthalpy (Btu/lbm)
323.0	1242.2	311.4	2.7	900.2
323.5	1436.2	298.4	2.7	900.2
324.0	1075.5	371.8	2.7	900.2
324.5	1241.9	309.5	2.6	900.2
325.0	1393.2	289.3	2.6	900.2
325.5	1317.4	300.4	2.6	900.2
326.0	1319.5	308.6	2.6	900.2
326.5	1195.2	330.0	2.5	900.2
327.0	1207.9	320.7	2.5	900.2
327.5	1321.9	293.4	2.5	900.2
328.0	1193.5	317.9	2.4	900.2
328.5	1360.4	281.3	2.4	900.2
329.0	1246.4	311.0	2.4	900.2
329.5	1161.0	321.2	2.3	900.2
330.0	1227.1	314.5	2.3	900.2
330.5	1118.5	329.1	2.3	900.2
331.0	1208.3	321.3	2.3	900.2
331.5	1085.6	338.3	2.2	900.2
332.0	1237.2	304.0	2.2	900.2
332.5	1215.2	311.9	2.2	900.2
333.0	1091.2	340.2	2.1	900.2
333.5	1142.1	331.6	2.1	900.2
334.0	1020.7	371.1	2.1	900.2
334.5	987.1	366.0	2.0	900.2
335.0	1131.8	326.7	2.0	900.3
335.5	1088.8	334.9	2.0	900.3
336.0	1199.1	310.6	2.0	900.3
336.5	1169.8	313.3	1.9	900.3
337.0	1283.6	297.0	1.9	900.3
337.5	1176.3	322.9	1.9	900.3
338.0	1141.8	317.8	1.8	900.3
338.5	1443.9	272.5	1.8	900.3
339.0	1136.5	344.0	1.8	900.3
339.5	1191.4	310.7	1.7	900.3

Table 6.2.1-28 Break Mass and Energy Flow for the Double Ended Guillotine Break Resulting in the Minimum Containment Pressures for use in ECCS Evaluation (Sheet 21 of 24)

Time (sec)	Break Flow		Spilled Flow	
	Mass (lbm/sec)	Enthalpy (Btu/ lbm)	Mass (lbm/sec)	Enthalpy (Btu/lbm)
340.0	1280.6	315.6	1.7	900.3
340.5	1020.7	366.0	1.7	900.3
341.0	1326.3	284.1	1.7	900.3
341.5	1126.0	366.5	1.6	900.3
342.0	998.9	373.3	1.6	900.3
342.5	1258.6	303.9	1.6	900.3
343.0	1164.4	343.0	1.5	900.3
343.5	1162.7	336.8	1.5	900.3
344.0	1219.4	316.0	1.5	900.3
344.5	1201.2	342.0	1.5	900.3
345.0	1077.7	351.9	1.4	900.3
345.5	1342.7	308.2	1.4	900.3
346.0	1154.0	343.7	1.4	900.3
346.5	1203.6	320.2	1.3	900.3
347.0	1525.5	277.0	1.3	900.3
347.5	1131.8	361.8	1.3	900.3
348.0	1168.8	341.0	1.3	900.3
348.5	1454.6	289.5	1.2	900.3
349.0	1202.1	340.6	1.2	900.3
349.5	1293.0	310.1	1.2	900.3
350.0	1513.6	282.7	1.1	900.3
350.5	1200.1	344.4	1.1	900.3
351.0	1244.0	324.1	1.1	900.3
351.5	1371.0	308.9	1.0	900.3
352.0	1152.7	356.3	1.0	900.3
352.5	1220.0	327.8	1.0	900.3
353.0	1330.7	302.3	1.0	900.3
353.5	1344.3	305.9	0.9	900.3
354.0	1216.6	340.3	0.9	900.3
354.5	1077.6	368.7	0.9	900.3
355.0	1209.9	330.5	0.8	900.3
355.5	1080.0	365.8	0.8	900.3
356.0	1041.3	361.4	0.8	900.3
356.5	1273.2	305.8	0.7	900.3

Table 6.2.1-28 Break Mass and Energy Flow for the Double Ended Guillotine Break Resulting in the Minimum Containment Pressures for use in ECCS Evaluation (Sheet 22 of 24)

Time (sec)	Break Flow		Spilled Flow	
	Mass (lbm/sec)	Enthalpy (Btu/ lbm)	Mass (lbm/sec)	Enthalpy (Btu/lbm)
357.0	1085.9	360.1	0.7	900.3
357.5	1030.4	359.5	0.7	900.3
358.0	1122.1	343.5	0.6	900.3
358.5	1009.6	374.9	0.6	900.3
359.0	983.7	375.7	0.6	900.3
359.5	1022.5	361.8	0.6	900.3
360.0	939.8	402.9	0.5	900.3
360.5	881.8	408.5	0.5	900.3
361.0	961.9	375.4	0.5	900.3
361.5	951.3	383.4	0.4	900.3
362.0	854.1	427.8	0.4	900.3
362.5	893.2	403.5	0.4	900.3
363.0	832.5	442.2	0.3	900.3
363.5	817.8	435.1	0.3	900.3
364.0	870.2	413.4	0.3	900.3
364.5	857.1	420.2	0.2	900.3
365.0	909.6	400.9	0.2	900.3
365.5	943.7	385.3	0.2	900.3
366.0	982.2	376.9	0.2	900.3
366.5	1002.9	375.7	0.1	900.3
367.0	998.3	377.8	0.1	900.3
367.5	1061.5	360.2	0.1	900.3
368.0	1134.7	340.4	0.0	900.3
368.5	1215.6	326.8	0.0	900.3
369.0	1253.5	324.8	0.0	0.0
369.5	1275.0	330.5	0.0	0.0
370.0	1199.9	350.1	0.0	0.0
370.5	1334.9	319.2	0.0	900.4
371.0	1322.5	317.3	0.0	900.5
371.5	1603.8	297.5	0.0	900.5
372.0	1194.9	364.8	0.0	900.5
372.5	1320.1	341.4	0.0	900.5
373.0	1379.9	327.9	0.0	0.0
373.5	1301.2	351.7	0.0	0.0

Table 6.2.1-28 Break Mass and Energy Flow for the Double Ended Guillotine Break Resulting in the Minimum Containment Pressures for use in ECCS Evaluation (Sheet 23 of 24)

Time (sec)	Break Flow		Spilled Flow	
	Mass (lbm/sec)	Enthalpy (Btu/ lbm)	Mass (lbm/sec)	Enthalpy (Btu/lbm)
374.0	1443.7	321.5	0.0	0.0
374.5	1456.3	317.5	0.0	0.0
375.0	1443.4	315.7	0.0	0.0
375.5	1668.6	297.5	0.0	0.0
376.0	1270.6	362.8	0.0	900.7
376.5	1408.1	329.4	0.0	900.7
377.0	1422.7	330.5	0.0	900.7
377.5	1323.9	352.7	0.0	900.7
378.0	1467.8	318.1	0.0	0.0
378.5	1446.5	324.1	0.0	0.0
379.0	1370.5	329.8	0.0	0.0
379.5	1447.1	322.1	0.0	0.0
380.0	1255.8	354.8	0.0	0.0
380.5	1366.2	321.6	0.0	900.8
381.0	1301.2	331.2	0.0	900.8
381.5	1282.1	341.4	0.0	900.8
382.0	1240.6	349.8	0.0	900.8
382.5	1121.5	366.6	0.0	0.0
383.0	1095.5	368.2	0.0	0.0
383.5	1039.5	377.6	0.0	0.0
384.0	1048.5	369.9	0.0	0.0
384.5	1083.7	352.7	0.0	0.0
385.0	1104.2	359.3	0.0	0.0
385.5	905.7	420.2	0.0	900.8
386.0	877.6	414.9	0.0	900.9
386.5	838.0	451.1	0.0	0.0
387.0	680.5	533.8	0.0	0.0
387.5	642.0	556.2	0.0	0.0
388.0	520.7	669.5	0.0	0.0
388.5	557.9	614.3	0.0	0.0
389.0	531.9	643.3	0.0	0.0
389.5	495.0	676.2	0.0	0.0
390.0	537.2	619.7	0.0	900.9
390.5	492.2	671.4	0.0	900.9

Table 6.2.1-28 Break Mass and Energy Flow for the Double Ended Guillotine Break Resulting in the Minimum Containment Pressures for use in ECCS Evaluation (Sheet 24 of 24)

Time (sec)	Break Flow		Spilled Flow	
	Mass (lbm/sec)	Enthalpy (Btu/ lbm)	Mass (lbm/sec)	Enthalpy (Btu/lbm)
391.0	479.2	700.0	0.0	0.0
391.5	401.0	810.6	0.0	0.0
392.0	226.5	1179.6	0.0	0.0
392.5	207.1	1221.1	0.0	0.0
393.0	206.2	1220.2	0.0	0.0
393.5	209.0	1217.4	0.0	0.0
394.0	202.2	1218.6	0.0	901.0
394.5	196.0	1217.9	0.0	0.0
395.0	193.3	1219.0	0.0	0.0
395.5	196.3	1222.9	0.0	0.0
396.0	193.8	1221.7	0.0	0.0
396.5	191.3	1220.3	0.0	0.0
397.0	191.2	1221.8	0.0	0.0
397.5	183.3	1220.2	0.0	901.0
398.0	180.7	1221.6	0.0	0.0
398.5	175.0	1222.1	0.0	0.0
399.0	168.8	1221.7	0.0	0.0
399.5	176.6	1221.7	0.0	0.0

Table 6.2.1-29 Basic Specifications of ESF used in Minimum Containment Pressure Analysis

US-APWR Specification	Value	
	Full Capacity	Value Used for Containment Analysis
I. Passive Safety Injection Systems		
A. Number of Accumulators	4	4
B. Pressure, psig	695	641
II. Active Safety Injection Systems		
A. Safety Injection System		
1. Number of Lines	4	4
2. Number of Pumps	4	4
III. Containment Spray System		
A. Number of Lines	4	4
B. Number of Pumps	4	4
C. Flow Rate, gpm/unit	2450	2450
D. Activation Delay, seconds	N/A	0

Table 6.2.1-30 Passive Heat Sinks used in the Minimum Containment Pressure Analysis for ECCS Capability Studies (Sheet 1 of 2)

Passive Heat Sinks	Heat Transfer Area (ft^2)	Material	Thickness (in)
(1) Containment Dome	36,710	Carbon Steel Concrete	0.257 44.1
(2) Containment Cylinder	73,170	Carbon Steel Concrete	0.400 53.9
(3) Thick Concrete - Internal Separation Walls, Connection Path, Reactor Drain Pump Room, HAVC Header Room, SG Compartment	40,944	Concrete	31.7
(4) Thin Concrete - Internal Separation Walls, HAVC Header Room, Letdown Hx Rooms, Regenerative Hx Rooms	19,430	Concrete	7.54
(5) Lined Concrete (Stainless Steel) - Web Plate, Reactor Vessel Cavity Walls, RWSP Inner Walls	27,342	Stainless Steel Carbon Steel Concrete	0.118 0.472 45.6
(6) Lined Concrete (Stainless Steel) - Web Plate, Reactor Vessel Cavity Walls, RWSP Floor and Ceiling	282	Stainless Steel Carbon Steel Concrete	0.118 0.197 22.6
(7) Lined Concrete (Carbon Steel, Thick) - Primary Shield Walls, Secondary Shield Walls, HAVC Header Room, Reactor Drain Tank Rooms, Pressurizer Room, Missile Shield, Deck Plates, Reactor Vessel Lower Cavity Walls, SG Compartment	162,994	Carbon Steel Concrete	0.549 18.9
(8) Lined Concrete (Carbon Steel, Thin) - Deck Plates	162	Carbon Steel Concrete	0.311 7.08
(9) Internal Structure (Carbon Steel Thickness greater equals 2-inch) - Equipment Hatch, Air Lock, Accumulator Tanks, SG Supports, Level Switch	10,663	Carbon Steel	3.07
(10) Internal Structure (Carbon Steel Thickness between 2-inch and 1.2-inch) - Vents, Reactor Vessel Supports, Polar Crane, RCP Lower Bracket, RCP Supports	24,877	Carbon Steel	1.51
(11) Internal Structure (Carbon Steel Thickness between 1.2-inch and 0.4-inch) - Air Lock, Accumulator Column Supports, Excess Letdown Hx, Manipulator Crane Rail, Refueling Machine, Piping Supports, Covering Steel, Ring Guarder, Vent, NIS Electrical Horn, ITV Instruments, SG Supports, Pressurizer Supports, RCP Upper Bracket, RCP Flame, Let Down Hx	186,943	Carbon Steel	0.472

Table 6.2.1-30 Passive Heat Sinks used in the Minimum Containment Pressure Analysis for ECCS Capability Studies (Sheet 2 of 2)

Passive Heat Sinks	Heat Transfer Area (ft^2)	Material	Thickness (in)
(12) Internal Structure (Carbon Steel Thickness between 0.4-inch and 0.08-inch) - Reactor Drain Tank Column Supports, Excess Letdown Hx Column Supports, Refueling Crane, Duct Supports, Duct Connection Flanges, HAVC Units, Fans, Connecting Box, I/C Piping Supports, Cable Tubes, Penetration Boxes, Electrical Boards, Trans, Motor, Luminaries, I/C Supports, Electrical Boxes, I/C Rack, Stairways, RCP Duct, RCP Air Cooler, RCP Flywheel Cover, NIS Source Range Detector, Generative Hx Support	300,712	Carbon Steel	0.238
(13) Internal Structure (Carbon SteelThickness less than 0.08-inch) - Gratings, Ductings, Fans, HAVC Units, ICIS Boxes, Cable Trays, Duct Connecting Flanges, I/C Devices, ITV Instruments, NIS Air Horn	233,954	Carbon Steel	0.0496
(14) Internal Structure (Stainless Steel) - Reactor Drain Tank, RCP Purged Water Tank, Refueling Machine, Refueling Crane, RMS Indicators, ICIS Instruments, DRPI Tube, Transmitters, Level Switch, Luminaries, Temporary Fuel Rack, Reactor Drain Pump, Containment Sump Pump, Piping Support in the RWSP	12,976	Stainless Steel	0.295
(15) Copper - Coils, Copper Tubes, Luminaries, Cooling Coil's Fins	250,972	Copper	0.0088
(16) Uninsulated Cold-Water-Filled Piping (Stainless Steel)	14,892	Stainless Steel Water	0.323 1.36
(17) Empty Piping (Stainless Steel)	982	Stainless Steel	0.126
(18) Uninsulated Cold-Water-Filled Piping (Carbon Steel)	663	Carbon Steel Water	0.197 0.630
(19) Empty Piping (Carbon Steel)	896	Carbon Steel	0.138
(20) Aluminum - NIS Power Range Detector	59	Aluminum	0.118
(21) Web Plate	622	Carbon Steel	41.4

Table 6.2.1-31 Passive Heat Sinks Material Properties used for the Minimum Containment Pressure Analysis

Material	Density, lb/ft^3	Specific Heat, Btu/lb-°F	Thermal Conductivity, Btu/hr-ft-°F
Carbon Steel	490	0.12	27
Stainless Steel	494	0.12	9.2
Concrete	145	0.16	0.92
Copper	558	0.1	205
Aluminum	169	0.22	128
Water	62	1	0.35

Table 6.2.1-32 Mass Distribution Transient for the Worst-Case Postulated DEPSG Break

Phase		Prior to LOCA	End of Blowdown	End of Core Reflood	At Peak Pressure	1 Day into Recirc.
Time (seconds)		0	31.6	263.8	1781	86400
Initial Mass	RCS and ACC	1278.06	1278.06	1278.06	1278.06	1278.06
Added Mass	Pumped Injection	0.00	0.00	49.10	554.41	28384.96
	Total Added	0.00	0.00	49.10	554.41	28384.96
Total Available (Initial Mass +Total added)		1278.06	1278.06	1327.16	1832.47	29663.02
RCS Mass Distribution	Reactor Coolant	752.18	68.42	207.17	206.96	233.47
	Accumulator	525.89	460.68	94.42	19.68	0.00
	RCS Total Contents	1278.06	529.09	301.59	226.64	233.47
Effluent	Break Flow	0.00	748.95	1025.58	1541.46	29365.22
	ECCS Spill	0.00	0.00	0.00	0.00	0.00
	Total Effluent	0.00	748.95	1025.58	1541.46	29365.22
Total Accountable		1278.06	1278.04	1327.17	1768.11	29598.69

Unit: Thousand lbm

Table 6.2.1-33 Energy Distribution Transient for the Worst-Case Postulated DEPSG Break

Phase		Prior to LOCA	End of Blowdown	End of Core Reflood	At Peak Pressure	1 Day into Recirc.
Time (seconds)		0	31.6	263.8	1781	86400
Initial Energy		1287.54	1287.54	1287.54	1287.54	1287.54
Added Energy	Pumped Injection	0.00	0.00	5.57	78.69	4971.60
	Energy Generated during Shutdown from Decay Heat	0.00	15.59	49.61	197.82	3243.76
	Heat from Secondary	0.00	26.03	26.03	26.03	26.03
	Total Added	0.00	41.62	81.21	302.54	8241.39
Total Available	(Initial Energy + Added)	1287.54	1329.16	1368.74	1590.08	9528.93
RCS Energy Distribution	Reactor Coolant Internal Energy	441.38	17.13	58.34	75.93	69.07
	Accumulator Internal Energy	47.09	41.25	8.45	1.73	0.00
	Energy Stored in Core	43.45	23.10	7.59	8.14	6.06
	Energy Stored in RCS Structure	267.87	255.87	206.23	164.78	122.43
	Steam Generator Coolant Internal Energy	349.58	379.25	319.45	200.48	156.63
	Energy Stored in Steam Generator Metal	138.16	136.48	117.31	91.77	66.79
	RCS Total Contents	1287.54	853.07	717.38	542.83	420.98
Effluent	Break Flow	0.00	476.10	651.19	1081.54	9145.32
	ECCS Spill	0.00	0.00	0.00	0.00	0.00
	Total Effluent	0.00	476.10	651.19	1081.54	9145.32
Total Accountable		1287.54	1329.17	1368.57	1624.37	9566.29

Unit: Million Btu
Reference Temperature: 32 degF

Table 6.2.2-1 Input Values Employed in CSS Evaluation Calculations

~~CSS SPRAY NOZZLES~~	
Quantity	348
Type	Ramp Bottom, 0.375 in orifice
Spray Pattern	Hollow Cone
Flow per Nozzle	15.2 gpm at 40 psig
Material	Stainless steel
CS/RHR PUMP NPSH EVALUATION	
~~$h_{Static\ Head}$~~	~~29.7 ft.~~
~~$h_{line\ loss}$~~	~~7.1 ft.~~
~~$h_{ECC/CS\ strainer}$~~	~~≤4.7 ft. Note 1~~
$NPSH_{available}$	~~17.9 ft.~~20.9 ft. Note1
Design-basis $NPSH_{required}$	~~16.4 ft.~~19.7 ft.
SI PUMP NPSH EVALUATION	
~~$h_{Static\ Head}$~~	~~29.7 ft.~~
~~$h_{line\ loss}$~~	~~3.1 ft.~~
~~$h_{ECC/CS\ strainer}$~~	~~≤4.7 ft. Note 1~~
$NPSH_{available}$	~~21.9 ft.~~20.9 ft. Note1
Design-basis $NPSH_{required}$	~~15.7 ft.~~18.8 ft.

MIC-03-06-00010

MIC-03-06-00010

Note 1 - ~~Contains head loss due to debris clogging and chemical effect.~~Detail of NPSH available is described in Reference 6.2-34.

MIC-03-06-00010

Table 6.2.2-2 Comparison of RWSP Recirculation Intake Debris Strainer Design to RG 1.82 Requirements (Sheet 1 of 21)

No.	Regulatory Position	US-APWR Design
1.1	**Features Needed to Minimize the Potential for Loss of NPSH** The ECC sumps, which are the source of water for such functions as ECC and containment heat removal following a LOCA, should contain an appropriate combination of the following features and capabilities to ensure the availability of the ECC sumps for long-term cooling. The adequacy of the combinations of features and capabilities should be evaluated using the criteria and assumptions in Regulatory Position 1.3.	**Design Features and Capabilities** The design features and capabilities employed to minimize the potential for loss of NPSH are presented below.
1.1.1.1	A minimum of two sumps should be provided, each with sufficient capacity to service one of the redundant trains of the ECCS and CSS. The distribution of water sources and containment spray between the sumps should be considered in the calculation of boron concentration in the sumps for evaluating post-LOCA subcriticality and shutdown margins. Typically, these calculations are performed assuming the minimum boron concentration and the minimum dilution sources. Similar considerations should also be given in the calculation of time for hot leg switchover, which is calculated assuming the maximum boron concentration and a minimum of dilution sources.	Four separate, independent, and redundant 50% capacity trains each of CSS and SI are provided. Each quadrant of the (common) RWSP contains paired CSS and SI suction pipes (four pairs; one pair per quadrant). Each pair of CSS and SI suction pipes ends in a suction sump (four total), with each suction sump protected by an associated suction strainer (four total). The RWSP is the common suction source to the ECCS and CSS. The RWSP contains approximately ~~81,230~~84,750 ft^3 of 4,000 ppm boric acid at pH 4.3. Crystalline NaTB is added to raise pH to at least 7 for iodine removal and long term LOCA cooling and recovery. LOCA spillage and spray return flow paths to the RWSP promote full mixing. MIC-03-06-00070
1.1.1.2	To the extent practical, the redundant sumps should be physically separated by structural barriers from each other and from high-energy piping systems to preclude damage from LOCA, and, if within design basis, main steam or main feedwater break consequences to the components of both sumps (e.g., trash rakes, sump screens, and sump outlets) by whipping pipes or high-velocity jets of water or steam.	Four strainers and sumps are physically separated and located inside RWSP compartment which are away from pipe area.

Table 6.2.2-2 Comparison of RWSP Recirculation Intake Debris Strainer Design to RG 1.82 Requirements (Sheet 2 of 21)

No.	Regulatory Position	US-APWR Design	
1.1.1.3	The sumps should be located on the lowest floor elevation in the containment exclusive of the reactor vessel cavity to maximize the pool depth relative to the sump screens. The sump outlets should be protected by appropriately oriented (e.g., at least two vertical or nearly vertical) debris interceptors: (1) a fine inner debris screen and (2) a coarse outer trash rack to prevent large debris from reaching the debris screen. A curb should be provided upstream of the trash racks to prevent high-density debris from being swept along the floor into the sump. To be effective, the height of the curb should be appropriate for the pool flow velocities, as the debris can jump over a curb if the velocities are sufficiently high. Experiments documented in NUREG ICR-6772 and NUREGICR-6773 have demonstrated that substantial quantities of settled debris could transport across the sump pool floor to the sump screen by sliding or tumbling.	~~Containment drains (transfer pipes) into the RWSP are protected from large debris by vertical debris bars capped by a ceiling plate. The sump openings (suction strainers) are located at approximately elevation 3 ft. 7 in. of containment, with CSS and SI suction at approx. 1 ft. 5 in. Disk, type suction strainer base mounted above the RWSP floor to be used, with 0.066 in hole diameter.~~ ~~Strainer surface area of approximately 2,754 ft^2 each to reduce the flow velocity and resist clogging, with sufficient recirculation flow and submergence to preclude vortexing.~~The RWSP containing sump strainers is located on the lowest floor elevation in the containment. The RWSP is designed so that the strainers are fully submerged during all accident conditions. A passive disk layer type of strainer system is employed, instead of the conventional double screen design with a finer screen and trash rack. The strainer is mounted on the base plate installed on the RWSP floor. A curb is not required in the RWSP because the strainer is designed for safe operation with all design basis debris accumulating on the strainer surface. The strainer design takes no credit for debris settling in the transport evaluation. This has been validated by testing.	MIC-03-06-00011
1.1.1.4	The floor in the vicinity of the ECC sump should slope gradually downward away from the sump to further retard floor debris transport and reduce the fraction of debris that might reach the sump screen.	~~Suction strainer to be base mounted above level RWSP floor. Design analysis inputs for debris transport are conservative.~~The strainer does not require a floor slope because it is designed for safe operation with all design basis debris accumulating on the strainer surface. This has been validated by testing.	MIC-03-06-00012 MIC-03-06-00070

Table 6.2.2-2 Comparison of RWSP Recirculation Intake Debris Strainer Design to RG 1.82 Requirements (Sheet 3 of 21)

No.	Regulatory Position	US-APWR Design
1.1.1.5	All drains from the upper regions of the containment should terminate in such a manner that direct streams of water, which may contain entrained debris, will not directly impinge on the debris interceptors or discharge in close proximity to the sump. The drains and other narrow pathways that connect compartments with potential break locations to the ECC sump should be designed to ensure that they would not become blocked by the debris; this is to ensure that water needed for an adequate NPSH margin could not be held up or diverted from the sump.	~~The transfer pipe openings are equipped with vertical debris bars capped by a ceiling plate. The transfer pipes are located in areas of containment where drains do not directly impinge on them. Besides the transfer pipes and refueling cavity drains, no other drains or narrow pathways are assumed to provide make-up to the RWSP. Floor drain piping which collects in the Containment sump, such as the SG compartment floor and operating floor, is assumed to become blocked. Containment Spray water is drained to lower containment levels by way of stairway openings, equipment hatch, or compartment access openings. These openings are not considered to be narrow pathways vulnerable to blockage. Since the floor drains are assumed to be blocked, an amount of containment Spray water is assumed to collect and remain on various Containment levels. The heights of the water remaining on the Containment floors are assumed to be 0.05 m (2 in) on the EL 75' 5" and EL 50' 2" floor and refueling cavity, and 0.15 m (6 in) on the EL 25' 3" floor. This amount of remaining water is factored into the return water hold-up volume in the calculation of refueling water storage pit (RWSP) water levels.~~Return water drains through floor openings in the SG compartment floors to the reactor cavity and header compartment, before flowing through overflow piping in these compartments to the RWSP. Mesh debris interceptors are installed over the floor openings and within the header compartment. The mesh size (8-in x 8-in) is smaller than the overflow piping diameter (12-in) to prevent blockage by large debris. The overflow piping discharge locations in the RWSP are not located near the sump strainers and include return water baffles to prevent streams of water from directly impinging on the strainer.

MIC-03-06-00070

Table 6.2.2-2 Comparison of RWSP Recirculation Intake Debris Strainer Design to RG 1.82 Requirements (Sheet 4 of 21)

No.	Regulatory Position	US-APWR Design	
1.1.1.6	The strength of the trash racks should be adequate to protect the debris screens from missiles and other large debris. Trash racks and sump screens should be capable of withstanding the loads imposed by expanding jets, missiles, the accumulation of debris, and pressure differentials caused by post-LOCA blockage under design-basis flow conditions. When evaluating the impact from potential expanding jets and missiles, credit for any protection to trash racks and sump screens offered by surrounding structures or credit for remoteness of trash racks and sump screens from potential high energy sources should be justified.	~~Vertical debris bars and ceiling plate protecting transfer pipe openings are of robust design and provide adequate protection from missiles and other large debris. Suction strainers are designed to seismic category I and quality class B standards.~~The sump strainer and debris interceptors are classified as safety-related Equipment Class 2 and seismic category I to provide a robust design and adequate protection from dynamic effects such as expanding jets, missiles, and accumulated debris. Design loads are properly combined and differential pressure caused by potential debris clogging is taken into account as part of the mechanical analysis.	MIC-03-06-00070 MIC-03-06-00071
1.1.1.7	Where consistent with the overall sump design and functionality, the top of the debris interceptor structures should be a solid cover plate that is designed to be fully submerged after a LOCA and completion of the ECC injection. The cover plate is intended to provide additional protection to debris interceptor structures from LOCA generated loads. However, the design should also provide a means for the venting of any air trapped underneath the cover.	~~A conventional suction strainer design with a flat cover plate is not planned. A disk type RWSP suction strainer is to be used.~~A conventional sump strainer with a flat cover plate is not utilized. A passive disk layer type strainer is used, and designed to withstand debris loads when all design basis debris accumulates on the strainer surface.	MIC-03-06-00013 MIC-03-06-00071
1.1.1.8	The debris interceptors should be designed to withstand the inertial and hydrodynamic effects that are due to vibratory motion of a safe shutdown earthquake (SSE) following a LOCA without loss of structural integrity.	As noted in 1.1.1.6 above, the RWSP suction strainers are designed ~~to seismic category I and quality class B standards~~as Equipment Class 2, seismic category I components.	MIC-03-06-00071
1.1.1.9	Materials for debris interceptors and sump screens should be selected to avoid degradation during periods of both inactivity and operation and should have a low sensitivity to such adverse effects as stress-assisted corrosion that may be induced by chemically reactive spray during LOCA conditions.	Corrosion resistant (stainless steel) material is used for suction strainers and all inner surfaces of the RWSP.	
1.1.1.10	The debris interceptor structures should include access openings to facilitate the inspection of these structures, any vortex suppressors, and the sump outlets.	RWSP hatches are provided and suction strainers are designed to allow sump inspections.	

Table 6.2.2-2 Comparison of RWSP Recirculation Intake Debris Strainer Design to RG 1.82 Requirements (Sheet 5 of 21)

No.	Regulatory Position	US-APWR Design	
1.1.1.11	A sump screen design (i.e., size and shape) should be chosen that will avoid the loss of NPSH from debris blockage during the period that the ECCS is required to operate in order to maintain long-term cooling or maximize the time before loss of NPSH caused by debris blockage when used with an active mitigation system (see Regulatory Position 1.1.4).	~~Strainers~~The ECC/CS strainers are sized appropriately to withstand all design basis debris loads and minimize debris head loss to maintain adequate NPSH. ~~Because the RWSP has a large floor area, strainers are free from space restrictions and associated debris blockage.~~ An active sump strainer blockage mitigation system (Regulatory Position 1.1.4) is not applicable to the US-APWR.	MIC-03-06-00014 MIC-03-06-00071
1.1.1.12	The possibility of debris-clogging flow restrictions downstream of the sump screen should be assessed to ensure adequate long-term recirculation cooling, containment cooling, and containment pressure control capabilities. The size of the openings in the sump debris screen should be determined considering the flow restrictions of systems served by the ECCS sump. The potential for long thin slivers passing axially through the sump screen and then reorienting and clogging at any flow restriction downstream should be considered. Consideration should be given to the buildup of debris at downstream locations such as the following: containment spray nozzle openings, HPSI throttle valves, coolant channel openings in the core fuel assemblies, fuel assembly inlet debris screens, ECCS pump seals, bearings, and impeller running clearances. If it is determined that a sump screen with openings small enough to filter out particles of debris that are fine enough to cause damage to ECCS pump seals or bearings would be impractical, it is expected that modifications would be made to the ECCS pumps or ECCS pumps would be procured that can operate long-term under the probable conditions.	The ~~debris~~ECC/CS strainers are made of stainless steel and ~~could~~ use perforated plates in a layered disc with 0.066 in hole diameter~~.~~, which is sized to prevent any bypass debris larger than the minimum gap in downstream components. The design-basis bypass debris is determined and used for downstream evaluations for both in-vessel and ex-vessel portions. For in-vessel evaluations, potential impacts due to bypass debris clogging are evaluated and it is concluded that long term cooling is maintained. For ex-vessel evaluations, the downstream components and equipment will be procured to meet design requirements to withstand bypass debris loads.	MIC-03-06-00015 MIC-03-06-00070 MIC-03-06-00015 MIC-03-06-00071
1.1.1.13	ECC and containment spray pump suction inlets should be designed to prevent degradation of pump performance through air ingestion and other adverse hydraulic effects (e.g., circulatory flow patterns, high intake head losses).	~~During a LOCA, the minimum depth of water in the RWSP is 4 feet. At that minimum depth, the top of each RWSP suction strainer is submerged 3.67" below the surface of the water in the RWSP. The RWSP recirculation supply is sufficient to preclude adverse hydraulic effects (e.g., vortex formation and high suction head loss).~~The fully submerged advanced strainer configuration prevents vortexing from occuring. A low approach velocity at the strainer surface also mitigates the risk of vortexing, and prevents excessive head loss due to debris clogging or two-phase flow such as sump fluid flashing or deaeration.	MIC-03-06-00016 MIC-03-06-00016 MIC-03-06-00071

Table 6.2.2-2 Comparison of RWSP Recirculation Intake Debris Strainer Design to RG 1.82 Requirements (Sheet 6 of 21)

No.	Regulatory Position	US-APWR Design	
1.1.1.14	All drains from the upper regions of the containment building, as well as floor drains, should terminate in such a manner that direct streams of water, which may contain entrained debris, will not discharge downstream of the sump screen, thereby, bypassing the sump screen.	The US-APWR design of ESF structures, systems, or components (SSCs) does not include a CSS or SIS suction flow path that bypasses the ~~RWSP suction~~ECC/CS strainers.	MIC-03-06-00017
1.1.1.15	Advanced strainer designs (e.g., stacked disc strainers) have demonstrated capabilities that are not provided by simple flat plate or cone-shaped strainers or screens. For example, these capabilities include built-in debris traps where debris can collect on surfaces while keeping a portion of the screen relatively free of debris. The convoluted structure of such strainer designs increases the total screen area, and these structures tend to prevent the condition sometimes referred to as the TBE. It may be desirable to include these capabilities in any new sump strainer/screen designs. The performance characteristics and effectiveness of such designs should be supported by the appropriate test data for any particular intended application.	An advanced strainer design is ~~planned~~applied for the US-APWR. ~~Thin Bed Effects (TBE) are addressed in the US-APWR Sump Strainer Performance document (Ref. 6.2-34)~~The strainer is sized to withstand all design-basis debris loads, and prototypical strainer head loss tests were implemented to validate the design-basis debris head loss utilized for safety evaluations.	MIC-03-06-00018
1.1.2	**Minimizing Debris** The debris (see Regulatory Position 1.3.2) that could accumulate on the sump screen should be minimized.	**Design Features and Capabilities** The design features and capabilities employed to minimize debris are presented below.	
1.1.2.1	Cleanliness programs should be established to clean the containment on a regular basis, and plant procedures should be established for the control and removal of foreign materials from the containment.	Cleanliness, housekeeping, and foreign material exclusion areas are administrative controls developed by any applicant referencing the certified US-APWR design for construction and operation.	

Table 6.2.2-2 Comparison of RWSP Recirculation Intake Debris Strainer Design to RG 1.82 Requirements (Sheet 7 of 21)

No.	Regulatory Position	US-APWR Design	
1.1.2.2	Insulation types (e.g., fibrous and calcium silicate) that are sources of debris known to readily transports to the sump screen and cause higher head losses may be replaced with insulation (e.g., reflective metallic insulation) that transports less readily and causes less severe head losses once deposited onto the sump screen. If insulation is replaced or otherwise removed during maintenance, abatement procedures should be established to avoid generating debris or its residue in the containment.	~~Particulate (e.g., Min-K based) insulation is excluded from the containment by design. Insulation is a purchased product and its use is controlled to meet the parameters provided in the US-APWR Sump Strainer Performance document (Ref: 6.2-34)~~ The US-APWR design maximizes the use of RMI insulation and precludes the use of problematic insulation (fiber and particulate) in the containment. The strainer is designed to allow the use of additional fiber insulation as an operational margin for future plant operation. Programmatic controls will be established by any applicant referencing certified US-APWR design to avoid generating debris during the plant maintenance and operation which may exceed the design-basis.	MIC-03-06-00019
1.1.2.3	To minimize potential debris caused by chemical reaction of the pool water with metals in the containment, exposure of bare metal surfaces (e.g., scaffolding) to containment cooling water through spray impingement or immersion should be minimized, either by removal or by chemical-resistant protection (e.g., coatings or jackets).	The principal measures taken by the US-APWR design to preclude adverse chemical effects include the use of a buffering agent, NaTB, and minimizing the use of aluminum. Programmatic controls will be established by any applicant referencing certified US-APWR design to limit aluminum and avoid generating chemical debris during plant maintenance and operation which may exceed the design-basis.	MIC-03-06-00020
1.1.3	**Instrumentation** If relying on operator action to mitigate the consequences of the accumulation of debris on the ECC sump screens, safety-related instrumentation that provides operators with an indication and audible warning of impending loss of NPSH for ECCS pumps should be available in the MCR.	**Design Features and Capabilities** ~~containment spray and SI pump operating~~The US-APWR does not rely on operator action to prevent the accumulation of debris on the ECC/CS strainers or to mitigate the consequences of the accumulation of debris on the ECC/CS strainers. However, Containment spray and SI pump operating information is available in the MCR to assist in NPSH evaluation and includes flow, suction, discharge pressure, and pump motor current.	MIC-03-06-00021

Table 6.2.2-2 Comparison of RWSP Recirculation Intake Debris Strainer Design to RG 1.82 Requirements (Sheet 8 of 21)

No.	Regulatory Position	US-APWR Design	
1.1.4	**Active Sump Screen System** An active device or system (see examples in Appendix ~~5~~ B) may be provided to prevent the accumulation of debris on a sump screen or to mitigate the consequences of the accumulation of debris on a sump screen. An active system should be able to prevent debris that may block restrictions found in the systems served by the ECC pumps from entering the system. The operation of the active component or system should not adversely affect the operation of other ECC components or systems. The performance characteristics of an active sump screen system should be supported by the appropriate test data that address head loss performance.	**Design Features and Capabilities** An active sump strainer blockage mitigation system is not applicable to the US-APWR.	MIC-03-06-00022
1.1.5	**Inservice inspection** To ensure the operability and structural integrity of the trash racks and screens, access openings are necessary to permit the inspection of the ECC sump structures and outlets. Inservice inspection of racks, screens, vortex suppressors, and sump outlets, including a visual examination for evidence of structural degradation or corrosion, should be performed on a regular basis at every refueling period outage. Inspection of ECC sump components late in the outage can ensure the absence of foreign material in the ECC sump.	RWSP hatches are provided and ~~suction~~the ECC/CS strainers are designed to allow sump inspections. Corrosion resistant (stainless steel) material is used for suction strainers and all inner surfaces of the RWSP. Inservice inspection of strainers, structural distress and evidence of abnormal corrosion is addressed in Subsection 6.2.2.4 and Technical Specification surveillance 3.5.2.5.	MIC-03-06-00023
1.2	**Evaluation of Alternative Water Sources** To demonstrate that a combination of the features and actions listed above is adequate to ensure long-term cooling and that the five criteria of 10 CFR 50.46(b) will be met post-LOCA, an evaluation using the guidance and assumptions in Regulatory Position ~~3.1~~1.3 is conducted. If relying on operator action to prevent the accumulation of debris on ECC sump screens or to mitigate the consequences of the accumulation of debris on the ECC sump screens, an evaluation is performed to ensure that the operator has adequate indications, training, time, and system capabilities to perform the necessary actions. If not covered by emergency operating procedures, procedures use alternative water sources that activate when unacceptable head loss renders the sump inoperable. The valves needed to align the ECCS and CSSs (taking suction from the recirculation sumps) with an alternative water source are periodically inspected and maintained.	In US-APWR, “operator action to prevent the accumulation of debris on ~~ECC sump~~the ECC/CS strainers or to mitigate the consequences of the accumulation of debris on the ~~ECC sump~~ECC/CS strainers” and “use of alternate water source” is not required. An active sump strainer blockage mitigation system is not applicable to the US-APWR.	MIC-03-06-00024

Table 6.2.2-2 Comparison of RWSP Recirculation Intake Debris Strainer Design to RG 1.82 Requirements (Sheet 9 of 21)

No.	Regulatory Position	US-APWR Design
1.3	**Evaluation of Long-Term Recirculation Capability** The following techniques, assumptions, and guidance is used in a deterministic, plant-specific evaluation to ensure that any implementation of a combination of the features and capabilities listed in Regulatory Position 1.1 are adequate to ensure the availability of a reliable water source for long-term recirculation following a LOCA. The assumptions and guidance listed below are also used to develop test conditions for sump screens. Evaluation and confirmation of (1) sump hydraulic performance (e.g., geometric effects, air ingestion), (2) debris effects (e.g., debris transport, interceptor blockage, head loss), and (3) the combined impact on NPSH available at the pump inlet, is performed to ensure that long-term recirculation cooling is accomplished following a LOCA. Such an evaluation arrives at a determination of NPSH margin calculated at the pump inlet. An assessment is made of the susceptibility to debris blockage of the containment drainage flowpaths to the recirculation sump (to protect against a reduction in available NPSH if substantial amounts of water are held up or diverted away from the sump). An assessment is made of the susceptibility of the flow restrictions in the ECCS and CSS recirculation flow paths downstream of the sump screens and of the recirculation pump seal and bearing assembly design to failure from particulate ingestion and abrasive effects to protect against degradation of long-term recirculation pumping capacity.	**Design Features and Capabilities** Performance of long-term recirculation is evaluated by adopting the SE of NEI 04-07 methodology. ~~Further and additional evaluation is conducted in accordance with the US-APWR Sump Strainer Performance document (Ref. 6.2-34).~~ Subsection 6.2.2.3.1 to 6.2.2.3.14 provides the key US-APWR plant information with respect to the assumptions and guidance listed in the regulatory position 1.3. Further detail is discussed in the US-APWR GSI-191 associated technical reports (Ref. 6.2-34, 6.2-36, 6.2-38).

MIC-03-06-00025

Table 6.2.2-2 Comparison of RWSP Recirculation Intake Debris Strainer Design to RG 1.82 Requirements (Sheet 10 of 21)

No.	Regulatory Position	US-APWR Design	
1.3.1.1	ECC and containment heat removal systems should be designed so that sufficient available NPSH is provided to the system pumps, assuming the maximum expected temperature of the pumped fluid and no increase in containment pressure from that present prior to the postulated LOCA. (See Regulatory Position 1.3.1.2, below.) For sump pools with temperatures less than 212° F, it is conservative to assume that the containment pressure equals the vapor pressure of the sump water. This ensures that credit is not taken for the containment pressurization during the transient. For sub-atmospheric containments, this guidance should apply after the injection phase has terminated. For sub-atmospheric containments, prior to the termination of the injection phase, NPSH analyses should include conservative predictions of the containment atmospheric pressure and sump water temperature as a function of time.	~~Post-LOCA containment pressure is not credited for US-APWR NPSH evaluation of ECC and containment heat removal systems.~~For the minimum NPSH available calculation, no additional containment pressure is credited above the initial containment pressure for low sump fluid temperatures (i.e., ~~above~~ below approximately 212ºF). For higher sump fluid temperatures, the containment pressure is assumed to equal the saturation pressure corresponding to the sump water temperature, as discussed in MUAP-08001	MIC-03-06-00070 MIC-03-06-00026 MIC-03-06-00071
1.3.1.2	For certain operating PWRs for which the design cannot be practicably altered, conformance with Regulatory Position 1.3.1.1 (above) may not be possible. In these cases, no additional containment pressure should be included in the determination of available NPSH than is necessary to preclude pump cavitation. The calculation of available containment pressure and sump water temperature as a function of time should underestimate the expected containment pressure and overestimated the sump water temperature when determining the available NPSH for this situation.	~~Not applicable to US-APWR. (This item applies to operating PWR plants only.)~~Calculation of available NPSH is discussed in MUAP-08001 and includes conservative assumptions to underestimate containment pressure and overestimate sump water temperature.	MIC-03-06-00071 MIC-03-06-00027
1.3.1.3	For certain operating reactors for which the design cannot be practicably altered, if credit is taken for the operation of an ECCS or containment heat removal pump in cavitation, prototypical pump tests should be performed along with post-test examination of the pump to demonstrate that pump performance will not be degraded and that the pump continues to meet all the performance criteria assumed in the safety analyses. The time period in the safety analyses during which the pump may be assumed to operate while cavitating should not be longer than the time for which the performance tests demonstrate that the pump meets performance criteria.	~~Not applicable to US-APWR. (This item applies to operating PWR plants only.)~~Calculation of available NPSH is discussed in MUAP-08001 and does not credit operation of pumps in cavitation. Furthermore, ECCS and CS pumps will be procured and qualified per QME-1-2007 to operate under post-LOCA conditions.	MIC-03-06-00028 MIC-03-06-00071

Table 6.2.2-2 Comparison of RWSP Recirculation Intake Debris Strainer Design to RG 1.82 Requirements (Sheet 11 of 21)

No.	Regulatory Position	US-APWR Design	
1.3.1.4	The decay and residual heat produced following accident initiation should be included in the determination of the water temperature. The uncertainty in the determination of the decay heat should be included in this calculation. The residual heat should be calculated with margin.	The post-LOCA temperature-time profile of the RWSP is determined by analysis that considers decay and residual heat, and includes appropriate uncertainty and margin.	MIC-03-06-00028
1.3.1.5	The hot channel correction factor specified in (ANSI)/HI 1.1-1.5-1994 should not be used in determining the margin between the available and required NPSH for ECCS and containment heat removal system pumps.	The Hot Channel Correction Factor is not considered in the US-APWR.	MIC-03-06-00028
1.3.1.6	The calculation of available NPSH should minimize the height of water above the pump suction (i.e., the level of water on the containment floor). The calculated height of water on the containment floor should not consider quantities of water that do not contribute to the sump pool (e.g., atmospheric steam, pooled water on floors and in refueling canals, spray droplets and other falling water). The amount of water in enclosed areas that cannot be readily returned to the sump should not be included in the calculated height of water on the containment floor.	Post-LOCA water level in the RWSP is conservatively estimated and does not consider the quantity of water (including “trapped” water in enclosed areas) that does not contribute to the RWSP	MIC-03-06-00028
1.3.1.7	The calculation of pipe and fitting resistance and the calculation of the nominal screen resistance without blockage by debris should be done in a recognized, defensible method or determined from applicable experimental data.	Hydraulic resistance of piping, fittings, and valves is calculated using an approved method using widely recognized and approved industry standards. Head loss of the suction strainer selected and the customary review of the construction configuration are addressed in the US-APWR Sump Strainer Performance document (Ref. 6.2-34).	
1.3.1.8	Sump screen flow resistance that is due to blockage by LOCA-generated debris or foreign material in the containment that is transported to the suction intake screens should be determined using Regulatory Position 1.3.4.	Design analysis uses Regulatory Position 1.3.4.	MIC-03-06-00029
1.3.1.9	Calculation of available NPSH should be performed as a function of time until it is clear that the available NPSH will not decrease further.	NPSH calculation assumptions and input values are based on limiting (most conservative) conditions that yield the smallest margin.	MIC-03-06-00029
1.3.2	**Debris Sources and Generation**	US-APWR Design Feature	

Table 6.2.2-2 Comparison of RWSP Recirculation Intake Debris Strainer Design to RG 1.82 Requirements (Sheet 12 of 21)

No.	Regulatory Position	US-APWR Design	
1.3.2.1	Consistent with the requirements of 10 CFR 50.46, debris generation should be calculated for a number of postulated LOCAs of different sizes, locations, and other properties sufficient to provide assurance that the most severe postulated LOCAs are calculated. The level of severity corresponding to each postulated break should be based on the potential head loss incurred across the sump screen. Some PWRs may need recirculation from the sump for licensing basis events other than LOCAs. Therefore, licensees should evaluate the licensing basis and include potential break locations in the main steam and main feedwater lines, as well in determining the most limiting conditions for sump operation.	The break properties (e.g., sizes, locations) used in the SE of the NEI 04-07 methodology are considered for debris generation. Break properties are ~~addressed~~determined based on the most limiting break location in terms of debris generation, transport and head loss of the strainer as discussed in Subsection 6.2.2.3.1. Further detail is discussed in the US-APWR Sump Strainer Performance document (Ref. 6.2-34).	MIC-03-06-00030
~~1.3.1.3~~	~~For certain operating reactors for which the design cannot be practicably altered, if credit is taken for the operation of an ECCS or containment heat removal pump in cavitation, prototypical pump tests should be performed along with post test examination of the pump to demonstrate that pump performance will not be degraded and that the pump continues to meet all the performance criteria assumed in the safety analyses. The time period in the safety analyses during which the pump may be assumed to operate while cavitating should not be longer than the time for which the performance tests demonstrate that the pump meets performance criteria.~~	~~Not applicable to US-APWR. (This item applies to operating PWR plants only.)~~	MIC-03-06-00028
~~1.3.1.4~~	~~The decay and residual heat produced following accident initiation should be included in the determination of the water temperature. The uncertainty in the determination of the decay heat should be included in this calculation. The residual heat should be calculated with margin.~~	~~The post-LOCA temperature time profile of the RWSP is determined by analysis that considers decay and residual heat, and includes appropriate uncertainty and margin.~~	MIC-03-06-00028
~~1.3.1.5~~	~~The hot channel correction factor specified in (ANSI)/HI 1.1-1.5-1994 should not be used in determining the margin between the available and required NPSH for ECCS and containment heat removal system pumps.~~	~~The Hot Channel Correction Factor is not considered in the US-APWR.~~	MIC-03-06-00028

Table 6.2.2-2 Comparison of RWSP Recirculation Intake Debris Strainer Design to RG 1.82 Requirements (Sheet 13 of 21)

No.	Regulatory Position	US-APWR Design
~~1.3.1.6~~	~~The calculation of available NPSH should minimize the height of water above the pump suction (i.e., the level of water on the containment floor). The calculated height of water on the containment floor should not consider quantities of water that do not contribute to the sump pool (e.g., atmospheric steam, pooled water on floors and in refueling canals, spray droplets and other falling water). The amount of water in enclosed areas that cannot be readily returned to the sump should not be included in the calculated height of water on the containment floor.~~	~~Post-LOCA water level in the RWSP is conservatively estimated and does not consider the quantity of water (including "trapped" water in enclosed areas) that does not contribute to the RWSP.~~

MIC-03-06-00028

Table 6.2.2-2 Comparison of RWSP Recirculation Intake Debris Strainer Design to RG 1.82 Requirements (Sheet 14 of 21)

No.	Regulatory Position	US-APWR Design
1.3.2.2	An acceptable method for estimating the amount of debris generated by a postulated LOCA is to use the zone of influence (ZOI). Examples of this approach are provided in NUREG/CR-6224 and Boiling Water Reactor Owners' Group (BWROG) Utility Resolution Guidance (NEDO-32686 and the staffs Safety Evaluation on the BWROG's response to NRC Bulletin 96-03). A representation of the ZOI for commonly-used insulation materials is shown in Figure 3. The size and shape of the ZOI should be supported by analysis or experiments for the break and potential debris. The size and shape of the ZOI should be consistent with the debris source (e.g., insulation, fire barrier materials) damage pressures, (i.e., the ZOI should extend until the jet pressures decrease below the experimentally determined damage pressures appropriate for the debris source). The volume of debris contained within the ZOI should be used to estimate the amount of debris generated by a postulated break. The size distribution of debris created in the ZOI should be determined by analysis or experiments. The shock wave generated during the postulated pipe break and the subsequent jet should be the basis for estimating the amount of debris generated and the size or size distribution of the debris generated within the ZOI. Certain types of material used in a small quantity inside the containment can, with adequate justification, be demonstrated to make a marginal contribution to the debris loading for the ECC sump. If debris generation and debris transport data have not been determined experimentally for such material, it may be grouped with another, like material existing in large quantities. For example, a small quantity of fibrous filtering material may be grouped with a substantially large quantity of fibrous insulation debris, and the debris generation and transport data for the filter material need not be determined experimentally. However, such analyses are valid only if the small quantity of material treated in this manner does not have a significant effect when combined with other materials (e.g., a small quantity of calcium silicate combined with fibrous debris).	The debris generated by a postulated pipe break is estimated by applying the ZOI(s) corresponding to debris types as recommended in SE of the NEI 04-07 methodology. A reduced ZOI for protective coating (Ref. 6.2-51 and 6.2-52) is applied for coating debris generation. Debris generation is addressed in the subsection 6.2.2.3.3. Further detail is discussed in US-APWR Sump Strainer Performance document (Ref. 6.2-34).

MIC-03-06-00031

Table 6.2.2-2 Comparison of RWSP Recirculation Intake Debris Strainer Design to RG 1.82 Requirements (Sheet 15 of 21)

No.	Regulatory Position	US-APWR Design	
1.3.2.3	A sufficient number of breaks in each high-pressure system that relies on recirculation should be considered to reasonably bound variations in debris generation by the size, quantity, and type of debris. At a minimum, the following postulated break locations should be considered. Breaks in the reactor coolant system (e.g., hot leg, cold leg, pressurizer surge line) and, depending on the plant licensing basis, main steam and main feedwater lines with the largest amount of potential debris within the postulated ZOI. Large breaks with two or more different types of debris, including the breaks with the most variety of debris, within the expected ZOI. Breaks in areas with the most direct path to the sump, medium and large breaks with the largest potential particulate debris to insulation ratio by weight. Breaks that generate an amount of fibrous debris that, after its transport to the sump screen, could form a uniform thin bed that could subsequently filter sufficient particulate debris to create a relatively high head loss referred to as the TBE. The minimum thickness of fibrous debris needed to form a thin bed has typically been estimated at 0.125 inch thick, based on the nominal insulation density (NUREG/CR-6224).	The break selection is performed base on the five break location criteria recommended in the SE of NEI 04-07 methodology and the most limiting break location is utilized for debris generation analysis as discussed in subsection 6.2.2.1. Further details are addressed in the US-APWR Sump Strainer Performance document (Ref. 6.2-34).	MIC-03-06-00035 MIC-03-06-00032
1.3.2.4	All insulation (e.g., fibrous, calcium silicate, reflective metallic), painted surfaces, fire barrier materials, and fibrous, cloth, plastic, or particulate materials within the ZOI should be considered a debris source. Analytical models or experiments should be used to predict the size of the postulated debris. For breaks postulated in the vicinity of the pressure vessel, the potential for debris generation from the packing materials commonly used in the penetrations and the insulation installed on the pressure vessel should be considered. Particulate debris generated by pipe rupture jets stripping off paint or coatings and eroding concrete at the point of impact should also be considered.	Potential debris sources, types, and characteristics are addressed in subsection 6.2.2.3.2. Further details are discussed in the US-APWR Sump Strainer Performance document (Ref. 6.2-34).	MIC-03-06-00036 MIC-03-06-00032
1.3.2.5	The cleanliness of the containment during plant operation should be considered when estimating the amount and type of debris available to block the ECC sump screens. The potential for such material (e.g., thermal insulation other than piping insulation, ropes, fire hoses, wire ties, tape, ventilation system filters, permanent tags or stickers on plant equipment, rust flakes from unpainted steel surfaces, corrosion products, dust and dirt, latent individual fibers) to impact head loss across the ECC sump screens should also be considered.	Cleanliness, housekeeping and foreign material exclusion areas are administrative controls and programs to be developed by any applicant referencing the certified US-APWR design for construction and operation.	

Table 6.2.2-2 Comparison of RWSP Recirculation Intake Debris Strainer Design to RG 1.82 Requirements (Sheet 16 of 21)

No.	Regulatory Position	US-APWR Design	
1.3.2.6	In addition to debris generated by jet forces from the pipe rupture, debris created by the resulting containment environment (thermal and chemical) should be considered in the analyses. Examples of this type of debris would be disbondment of coatings in the form of chips and particulates or formation of chemical debris (precipitants) caused by chemical reactions in the pool.	~~Principal measures taken by the US-APWR design to preclude adverse chemical effects include the use of the buffering agent, NaTB, and minimizing the use of aluminum.~~Chemical debris is considered in the design-basis debris of the US-APWR and utilized in the analyses. The US-APWR chemical effects test using plant debris source material was implemented and test data was used for quantifying the chemical debris.	MIC-03-06-00033
1.3.2.7	Debris generation that is due to continued degradation of insulation and other debris when subjected to turbulence caused by cascading water flows from upper regions of the containment, or near the break overflow region should be considered in the analyses.	~~Break properties and debris production considerations are based on NEI 04-07 methodology and are addressed in the US-APWR Sump Strainer Performance document (Ref. 6.2-34).~~The US-APWR conservatively assumes that all debris is fine which is transported to the strainer. No debris settlement or entrapment in containment is credited in the analysis. 30 day-erosion is not applicable to the US-APWR debris generation analysis.	MIC-03-06-00034
~~1.3.2.3~~	~~A sufficient number of breaks in each high-pressure system that relies on recirculation should be considered to reasonably bound variations in debris generation by the size, quantity, and type of debris. At a minimum, the following postulated break locations should be considered. Breaks in the reactor coolant system (e.g., hot leg, cold leg, pressurizer surge line) and, depending on the plant licensing basis, main steam and main feedwater lines with the largest amount of potential debris within the postulated ZOI. Large breaks with two or more different types of debris, including the breaks with the most variety of debris, within the expected ZOI. Breaks in areas with the most direct path to the sump, medium and large breaks with the largest potential particulate debris to insulation ratio by weight. Breaks that generate an amount of fibrous debris that, after its transport to the sump screen, could form a uniform thin bed that could subsequently filter sufficient particulate debris to create a relatively high head loss referred to as the TBE. The minimum thickness of fibrous debris needed to form a thin bed has typically been estimated at 0.125 inch thick, based on the nominal insulation density (NUREG/CR-6224).~~	~~The break properties (e.g., sizes, locations) used in the NEI 04-07 methodology are addressed in the US-APWR Sump Strainer Performance document (Ref. 6.2-34).~~	MIC-03-06-00035

Table 6.2.2-2 Comparison of RWSP Recirculation Intake Debris Strainer Design to RG 1.82 Requirements (Sheet 17 of 21)

No.	Regulatory Position	US-APWR Design	
~~1.3.2.4~~	~~All insulation (e.g., fibrous, calcium silicate, reflective metallic), painted surfaces, fire barrier materials, and fibrous, cloth, plastic, or particulate materials within the ZOI should be considered a debris source. Analytical models or experiments should be used to predict the size of the postulated debris. For breaks postulated in the vicinity of the pressure vessel, the potential for debris generation from the packing materials commonly used in the penetrations and the insulation installed on the pressure vessel should be considered. Particulate debris generated by pipe rupture jets stripping off paint or coatings and eroding concrete at the point of impact should also be considered.~~	~~Potential debris sources, types, and characteristics are addressed in the US-APWR Sump Strainer Performance document (Ref. 6.2-34).~~	MIC-03-06-00036
1.3.3.1	The calculation of the debris quantities transported from debris sources to the sump screen should consider all modes of debris transport, including airborne debris transport, containment spray wash-down debris transport, and containment sump pool debris transport. Consideration of the containment pool debris transport should include, (1) debris transport during the fill-up phase, as well as during the recirculation phase, (2) the turbulence in the pool caused by the flow of water, water entering the pool from break overflow, and containment spray drainage, and (3) the buoyancy of the debris. Transport analyses of the debris should consider: (1) debris that would float along the pool surface, (2) debris that would remain suspended due to pool turbulence (e.g., individual fibers and fine particulates), and (3) debris that readily settles to the pool floor.	~~Debris quantity calculations consider appropriate transport modes and mechanisms for LOCA phases and conditions, consistent with NEI 04-07 guidance and recommendations. Further analysis and evaluation of phenomena affecting the RWSP performance~~The US-APWR conservatively assumes that all generated debris in containment is transported to operable sumps during accident. No debris settlement, floating, or entrapment in containment is credited in transport analysis as discussed in Subsection 6.2.3.3.5. Further details are addressed in the US-APWR Sump Strainer Performance document (Ref. 6.2-34).	MIC-03-06-00037
1.3.3.2	The debris transport analyses should consider each type of insulation (e.g., fibrous, calcium silicate, reflective metallic) and debris size (e.g., particulates, fibrous fine, large pieces of fibrous insulation). The analyses should also consider the potential for further decomposition of the debris as it is transported to the sump screen.	~~Transport analysis is addressed in the US-APWR Sump Strainer Performance document (Ref. 6.2-34).~~The debris transport analyses consider each type of debris source. 30-day erosion of debris is no longer applicable to the US-APWR, as discussed in the above Regulatory Position 1.3.2.7.	MIC-03-06-00038
1.3.3.3	Bulk flow velocity from recirculation operations, LOCA-related hydrodynamic phenomena, and other hydrodynamic forces (e.g., local turbulence effects or pool mixing) should be considered for both debris transport and ECC sump screen velocity computations.	~~RWSP transport and suction strainer performance computations consider appropriate bulk flow velocities and other LOCA-related hydrodynamic phenomena and forces.Bulk flow velocity or computed fluid dynamics (CFD) simulation is not applicable for the US-APWR debris transport evaluation.~~ The US-APWR conservatively assumes that all generated debris in containment is transported to the sump.	MIC-03-06-00039 MIC-03-06-00071

Table 6.2.2-2 Comparison of RWSP Recirculation Intake Debris Strainer Design to RG 1.82 Requirements (Sheet 18 of 21)

No.	Regulatory Position	US-APWR Design	
1.3.3.4	An acceptable analytical approach to predict debris transport within the sump pool is to use computational fluid dynamics (CFD) simulations in combination with the experimental debris transport data. Examples of this approach are provided in NUREG/CR-6772 and NUREG/CR-6773. Alternative methods for debris transport analyses are also acceptable, provided they are supported by adequate validation of analytical techniques using experimental data to ensure that the debris transport estimates are conservative with respect to the quantities and types of debris transported to the sump screen.	~~RWSP debris transport design analysis is performed by alternate methods, uses approved analytical techniques, and is addressed in the US-APWR Sump Strainer Performance document (Ref. 6.2-34).~~Not applicable to the US-APWR. The US-APWR conservatively assumes that all generated debris is transported to the sump.	MIC-03-06-00040
1.3.3.5	Curbs can be credited for removing heavier debris that has been shown analytically or experimentally to travel by sliding along the containment floor and that cannot be lifted off the floor within the calculated water velocity range.	~~RWSP debris transport design analysis is performed by alternate method, uses approved analytical techniques, and is addressed in the US-APWR Sump Strainer Performance document (Ref. 6.2-34).~~Curbs are not credited for reducing debris which reaches the strainer. The US-APWR conservatively assumes that all generated debris is transported to the sump.	MIC-03-06-00041
1.3.3.6	If transported to the sump pool, all debris (e.g., fine fibrous, particulates) that would remain suspended due to pool turbulence should be considered to reach the sump screen.	~~RWSP debris transport design analysis is performed by alternate methods, uses approved analytical techniques, and is addressed in the US-APWR Sump Strainer Performance document (Ref. 6.2-34).~~The US-APWR conservatively assumes that all generated debris is transported to the sump.	MIC-03-06-00042
1.3.3.7	The time to switch over to sump recirculation and the operation of containment spray should be considered in the evaluation of debris transport to the sump screen.	RWSP is the reliable and safety-related source of cooling water following a LOCA. This item does not apply to US-APWR design. (No suction “switch-over.”)	

Table 6.2.2-2 Comparison of RWSP Recirculation Intake Debris Strainer Design to RG 1.82 Requirements (Sheet 19 of 21)

No.	Regulatory Position	US-APWR Design	
1.3.3.8	In lieu of performing airborne and containment spray wash-down debris transport analyses, it could be assumed that all debris will be transported to the sump pool. In lieu of performing sump pool debris transport analyses (Regulatory Position1. 3.3.4 above), it could be assumed that all debris entering the sump pool or originating in the sump will be considered transported to the sump screen when estimating screen debris bed head loss. If it is credible in a plant that all drains leading to the containment sump could become completely blocked, or an inventory holdup in the containment could happen together with debris loading on the sump screen, these ~~situations~~ could pose a worse impact on the recirculation sump performance than the assumed situations mentioned above. In this case, these situations should also be assessed.	~~Debris quantity calculations consider appropriate transport modes and mechanisms for LOCA phases and conditions, consistent with NEI 04-07 guidance and recommendations, and are addressed in the US-APWR Sump Strainer Performance document (Ref. 6.2-34). Multiple RWSP drain paths located around the containment and at differing heights ensure reliable water return to RWSP. Water holdup volume is accounted for in the minimum RWSP volume (607,500 gal), and suction strainers are of the latest design available. Thus, simultaneous blockages of debris interceptors and strainers are not deemed credible.~~The US-APWR assumes that all generated debris is transported to the sump. Potential choke points which could block make-up water flow to the RWSP have been evaluated. Given the multiple drain paths to the RWSP, complete blockage of all paths to the RWSP is considered to be not credible.	MIC-03-06-00043
1.3.3.9	The effects of floating or buoyant debris on the integrity of the sump screen and on subsequent head loss should be considered. For screens that are not fully or are only shallowly submerged, floating debris could contribute to the debris bed head loss. The head loss due to floating or buoyant debris could be minimized by a design feature to keep buoyant debris from reaching the sump screen.	The four ~~RWSP suction~~ECC/CS strainers are widely separated and fully submerged ~~(approx. 4 ft. at minimum) as base-mounted on the RWSP floor, and are of a low-flow design presenting approximately 3,510 ft^2 surface area.~~by design. Floating or buoyant debris does not adversely affect strainer performance.	MIC-03-06-00044
1.3.4 1.3.4.1	**Debris Accumulation and Head Loss** ECC sump screen blockage should be evaluated based on the amount of debris estimated using assumptions and criteria of Regulatory Position 3.2 and on debris transported to the ECC sump (Regulatory Position 3.3.) The debris volume should be used to estimate the rate of accumulation of debris on the ECC sump screen.	~~Debris that reaches the RWSP suction strainer is considered to be clogging the strainer surface. A plant specific strainer performance characteristics evaluation is addressed in the US-APWR Sump Strainer Performance document (Ref. 6.2-34).~~The ECC/CS strainers are designed based on conservative assumptions so that all generated debris in containment is transported to the sumps. In addition, conservative assumptions (e.g., flow rate, temperature) are considered to conservatively evaluate the strainer head loss.	MIC-03-06-00045

Table 6.2.2-2 Comparison of RWSP Recirculation Intake Debris Strainer Design to RG 1.82 Requirements (Sheet 20 of 21)

No.	Regulatory Position	US-APWR Design	
1.3.4.2	Consideration of ECC sump screen submergence (full or partial) at the time of switchover to ECCS should be given in calculating the available (wetted) screen area. For plants in which containment heat removal pumps take suction from the ECC sump before switchover to the ECCS, the available NPSH for these pumps should consider the submergence of the sump screens at the time these pumps initiate suction from the ECC sump. Unless otherwise shown analytically or experimentally, debris should be assumed to be uniformly distributed over the available sump screen surface. Debris mass should be calculated based on the amount of debris estimated to reach the ECC sump screen. (See Revision 1 of NUREG-0897, NUREG/CR-3616, and NUREG/CR-6224.)	US-APWR design does not require suction "switch over." ~~An NPSH evaluation of the CSS head loss is addressed in the US-APWR Sump Strainer Performance document (Ref. 6.2-34).~~Strainers are fully submerged from the beginning of postulated accidents. All debris is considered to be uniformly distributed over the strainer disk~~s~~ surface. This has been demonstrated by testing.	MIC-03-06-00046 MIC-03-06-00071
1.3.4.3	For fully submerged sump screens, the NPSH available to the ECC pumps should be determined using the conditions specified in the plant's licensing basis.	~~NPSH design analysis inputs are addressed in the US-APWR Sump Strainer Performance document (Ref. 6.2-34).~~The ECC/CS strainers is designed based on conservative assumptions so that all generated debris in containment is transported to the sumps. In addition, conservative assumptions (e.g., flow rate, temperature) are considered to conservatively evaluate the strainer head loss.	MIC-03-06-00047
1.3.4.4	For partially submerged sumps, NPSH margin may not be the only failure criterion (see Appendix A). For partially submerged sumps, credit should only be given to the portion of the sump screen that is expected to be submerged, as a function of time. Pump failure should be assumed to occur when the head loss across the sump screen (including only the clean screen head loss and the debris bed head loss) is greater than one-half of the submerged screen height or NPSH margin.	Not applicable to the US-APWR design. ~~Suction~~The ECC/CS strainers are submerged ~~(approx. 4 ft., minimum)~~ during a LOCA.	MIC-03-06-00048

Table 6.2.2-2 Comparison of RWSP Recirculation Intake Debris Strainer Design to RG 1.82 Requirements (Sheet 21 of 21)

No.	Regulatory Position	US-APWR Design	
1.3.4.5	Estimates of head loss caused by debris blockage should be developed from empirical data based on the sump screen design (e.g., surface area and geometry), postulated combinations of debris (i.e., amount, size distribution, type), and approach velocity. Because the debris beds that form on sump screens can trap debris that would pass through an unobstructed sump screen opening, any head loss correlation should conservatively account for filtration of particulates by the debris bed, including particulates that would pass through an unobstructed sump screen.	~~Head loss estimates are consistent with NEI 04-07 guidance and recommendations. Information on sump screen performance for long-term cooling is proposed in the US-APWR Sump Strainer Performance document (Ref. 6.2-34).~~The design basis strainer head loss includes additional margin from the empirical data obtained by the US-APWR strainer head loss tests. The tests were implemented and terminated after sufficient pool turnover to ensure all debris accumulated on the strainer surfaces. The tests demonstrated that there was no unobstructed portions of the strainer surface and recirculated particles were further filtered by the debris bed.	MIC-03-06-00049
1.3.4.6	Consistent with the requirements of 10 CFR 50.46, head loss should be calculated for the debris beds formed of different combinations of fibers and particulate mixtures (e.g., minimum uniform thin bed of fibers supporting a layer of particulate debris) based on assumptions and criteria described in Regulatory Positions 1.3.2 and 1.3.3.	~~Debris accumulation and characterization is addressed in the US-APWR Sump Strainer Performance document (Ref. 6.2-34).~~The design basis strainer head loss includes additional margin from the empirical data obtained by the US-APWR strainer head loss tests. The tests were designed to form a mixed bed consisting of all debris types (i.e., fiber insulation, coating particles, latent fiber and dirt/dust, and chemical debris). The tests demonstrated formation of a thin bed over the strainer surface and further filtering of recirculated particle debris.	MIC-03-06-00050

Table 6.2.2-3 Failure Modes and Effects Analysis for CSS (Sheet 1 of 4)

Component	Failure Mode	Plant Condition	Effect on System Operation	Failure Detection Method
1.CS/RHR Pump A (B, C, and D analogous)	Failure to deliver flow	LOCA or MSLB (continuous spray required)	No effect on plant safety because three, 50% CS/RHR pumps are available and only 2 are required	CS/RHR pump operating information in the MCR includes flow, suction, and discharge pressure, pump motor current, and RUN indication for each pump
		Post-LOCA cooling of RWSP (containment spray no longer required)	No effect on plant safety because three, 50% CS/RHR pumps are available and only 2 are required	
	Failure to deliver flow, with one CS/RHR train out of service	LOCA or MSLB (continuous spray required)	No effect on plant safety because two, 50% CS/RHR trains are available and two are required	
		Post-LOCA cooling of RWSP (containment spray no longer required)	No effect on plant safety because two, 50% CS/RHR trains are available and two are required	

Table 6.2.2-3 Failure Modes and Effects Analysis for CSS (Sheet 2 of 4)

Component	Failure Mode	Plant Condition	Effect on System Operation	Failure Detection Method
2. Containment Spray Header, containment isolation valve CSS-MOV-004A (CSS-MOV-004B, C, and D analogous)	Failure to open on demand	LOCA or MSLB (continuous spray required)	No effect on plant safety because three isolation valves open for three, 50% CS/RHR pumps to supply (all four) spray rings. Only two open isolation valves (two, 50% capacity pumps) are required	Valve position indication MCR.
	Failure to close on demand	Post-LOCA cooling of RWSP (containment spray no longer required)	No effect on plant safety because three isolation valves close for three, 50% CS/RHR trains to cool the RWSP. Two CS/RHR trains are required	
	Failure to open on demand with one containment spray train out of service	LOCA or MSLB (continuous spray required)	No effect on plant safety because two isolation valves open for two, 50% CS/RHR pumps to supply (all four) spray rings and two are required	
	Failure to close on demand with one containment spray train out of service	Post-LOCA cooling of RWSP (containment spray no longer required)	No effect on plant safety because two isolation valves close for two, 50% CS/RHR trains to cool the RWSP. Two CS/RHR trains are required.	

Table 6.2.2-3 Failure Modes and Effects Analysis for CSS (Sheet 3 of 4)

Component	Failure Mode	Plant Condition	Effect on System Operation	Failure Detection Method
3. RHR discharge line containment isolation valve RHS-MOV-021A (RHS-MOV-021B, C and D analogous)	Failure to open on demand	Post-LOCA cooling of RWSP (containment spray no longer required)	No effect on plant safety because 3 other RHR containment isolation valves open for 3, 50% trains of RHR cooling. Only 2 trains required.	Valve position indication MCR.
	Failure to open on demand, with one RHR train out of service.		No effect on plant safety because 2 other RHR containment isolation valves open for 2, 50% trains of RHR cooling. Two trains required.	
4. CS/RHR pump full-flow test line stop valve RHS-MOV-025A (RHS-MOV-025B, C and D analogous)	Failure to open on demand	Post-LOCA cooling of RWSP (containment spray no longer required)	No effect on plant safety because 3 other CS/RHR full-flow test line stop valves open for 3, 50% trains of RHR cooling to RWSP. Only 2 trains required.	
	Failure to open on demand, with one CS/RHR train out of service		No effect on plant because 2 other safety CS/RHR full-flow test line stop valves open for RWSP cooling. Two trains are required.	

Table 6.2.2-3 Failure Modes and Effects Analysis for CSS (Sheet 4 of 4)

Component	Failure Mode	Plant Condition	Effect on System Operation	Failure Detection Method
5. I & C for CS initiation	Failure to deliver fluid due to loss of CSS initiation signal	LOCA or MSLB (continuous spray required) Post-LOCA cooling of RWSP (CS no longer required)	Same as item 1	Same as item 1
	Failure to deliver fluid due to loss of CSS initiation signal with one CS/ RHR train out of service.			
6 Class 1E ac power source	Failure to deliver fluid due to loss of ac power.	LOCA or MSLB (continuous spray required) Post-LOCA cooling of RWSP (CS no longer required)	Same as item 1	
	Failure to deliver fluid due to loss of ac power with one CS/RHR train out of service.			

DCD_06.02.02-55

Table 6.2.2-4 Design Basis Debris

Type		Amount
RMI (Transco)		106 (ft^3)
Fibrous Insulation (Nukon)		0.0 (ft^3) (1)
Coating (Epoxy)		3.0 (ft^3) (2)
Latent Debris (200 lbm)	Fiber (15%)	30 (lbm)
	Particle (85%)	170 (lbm)
Chemical debris	Aluminum Hydroxide	300 (lbm)
	Sodium Aluminum Silicate	330 (lbm)

MIC-03-06-00071

Note: The following debris is included as operational margin, in addition to the amounts above:
(1) 1.875 (ft^3) of fiber debris
(2) 200 (lbs) of coating debris

Table 6.2.4-1 Design Information Regarding Provisions for Isolating Containment Penetrations

Isolation Valve Design	Description
Valve Types	Isolation valves may be gate, globe, butterfly, diaphragm, check (simple check valves are acceptable only inside the containment), plug, and relief valves, depending upon the fluid system requirements.
Valve Leakage	The objective shall be to limit valve leakage to as low as reasonably achievable. The basic requirement for total valve leakage shall be to meet the acceptance criterion for Type C tests on 10 CFR 50, Appendix J (Ref. 6.2-28). The criterion requires that, on testing, the combined leakage rate for all penetrations and valves shall be less than 0.60 of the maximum allowable containment leakage rate.
Valve Operability Design and Qualification	American National Standard Self-Operated and Power-Operated Safety Related Valves Functional Specification Standard, N278.1-1975, has been issued and provides guidance on valve operability requirements for penetration of purchaser's specification for isolation valves.
Relief Valves	Relief valves can be used as isolation valves if their actuation pressures are 1.5 times greater than the containment design pressure.
Isolation Valve Seal Systems	There are no applications of isolation valve seal systems or fluid-filled systems that serve as seal systems in the US-APWR as described in ANS-56.2/ANSI-N271-1976, Section 4.11.

Table 6.2.4-2 Associated Containment Isolation Configurations

System	Description	Isolation Configuration (Figure 6.2.4-1)	Closed System Outside Containment	Protected From Missiles	Seismic Category and Equipment Class	Temperature / Pressure Rating at least equal to Containment	Remarks
GDC 55							
RHRS	Hot Leg CS/RHR Pump Suction Line	Sheet 12	Yes	Yes	I, 2	Yes	Inboard isolation valve locked closed
GDC 56							
SIS	SI Pump Suction Line	Sheet 11	Yes	Yes	I, 2	Yes	Remote Manual Motor Operated Valve
CSS	RWSP CS/RHR Pump Suction Line	Sheet 18	Yes	Yes	I, 2	Yes	Remote Manual Motor Operated Valve
CSS	Containment Pressure Instrument Line	Sheet 17	Yes	Yes	I, 2	Yes	Sensor is of sealed bellows type and protective case surrounds sensor and instrument
LTS	Local Pressure Indicator pressure detection line	Sheet 47	No	No	I, 2	Yes	Blank flanged on both Inboard and outboard portion of line
N/A	Oil Supply and Drain Line for RCP Motor	Sheet 48	No	No	I, 2	Yes	Blank flanged on both Inboard and outboard portion of line
N/A	Personnel Airlock	Sheet 49	No	No	I, 2	Yes	Containment pressure aids in seating both Inboard and outboard flanged portions of airlock
N/A	Equipment Hatch	Sheet 50	No	No	I, 2	Yes	Containment pressure aids in seating hatch flange
N/A	Electric Penetration	Sheet 51	No	No	I, 2	Yes	
N/A	Spare Penetration	Sheet 52	No	No	I, 2	Yes	

Table 6.2.4-3 List of Containment Penetrations and System Isolation Positions (Sheet 1 of 15)

Pen NO.	GDC	System Name	Fluid	Line Size (in.)	ESF or Support System	Valve Arragmt Figure 6.2.4-1	Valve Number	Location of Valve	Type Tests	Type C Test	Length of Pipe (Note 1)	Valve		Actuation Mode		Valve Position			Power Failure	Actuation Signal	Valve Closure (seconds)	Power Source	Remark	
												Type	Operator	Primary	Secondary	Normal	Shutdown	Post-Accident						
P247	56	RCS	Nitrogen Gas	1	No	Sht. 2	RCS-VLV-133	In	C	Y	-	Check	Self	Auto	None	-	-	-	NA	NA	NA	NA	Note 9	DCD_06.02.06-34
				1			RCS-AOV-132	Out			9.0 ft	Dia	Air	Auto	RM	O	C	C	FC	T	15	1E		
				3/4			RCS-VLV-167	In			-	Dia	Manual	Manual	None	C	C	C	NA	NA	NA	NA		
P260	56	RCS	Demi. Water	3	No	Sht. 3	RCS-VLV-139	In	C	Y	-	Check	Self	Auto	None	-	-	-	NA	NA	NA	NA	Note 9	DCD_06.02.06-34
				3			RCS-VLV-140	In			-	Dia	Manual	Manual	None	C	C	C	NA	NA	NA	NA		
				3			RCS-AOV-138	Out			10.0 ft	Globe	Air	Auto	RM	O	C	C	FC	T	15	1E		
P276L	56	RCS	Nitrogen Gas	3/4	No	Sht. 4	RCS-AOV-147	In	C	Y	-	Globe	Air	Auto	RM	O	C	C	FC	T	15	1E	Note 9	DCD_06.02.06-34
				3/4			RCS-AOV-148	Out			10.0 ft	Globe	Air	Auto	RM	C	C	C	FC	T	15	1E		
P277	55	CVCS	Primary Coolant	4	No	Sht. 5	CVS-AOV-005	In	C	Y	-	Globe	Air	Auto	RM	O	O	C	FC	T	20	1E	Note 9	DCD_06.02.06-34
				4			CVS-AOV-006	Out			14.0 ft	Globe	Air	Auto	RM	O	O	C	FC	T	20	1E		
P278	55	CVCS	Primary Coolant	4	No	Sht. 6	CVS-VLV-153	In	C	Y	-	Check	Self	Auto	None	-	-	-	NA	NA	NA	NA	Note 9	DCD_06.02.06-34
				4			CVS-MOV-152	Out			14.0 ft	Gate	Motor	Auto	RM	O	O	C	FAI	S	20	1E		
				3/4			CVS-VLV-653	In			-	Globe	Manual	Manual	None	C	C	C	NA	NA	NA	NA		
P279	56	CVCS	Primary Coolant	1 1/2	No	Sht. 7	CVS-VLV-179B	In	C	Y	-	Check	Self	Auto	None	-	-	-	NA	NA	NA	NA	Note 9	DCD_06.02.06-34
				1 1/2			CVS-MOV-178B	Out			14.0 ft	Globe	Motor	RM	Manual	O	O	O	FAI	RM	15	1E		
				3/4			CVS-VLV-667B	In			-	Globe	Manual	Manual	None	C	C	C	NA	NA	NA	NA		
P280	56	CVCS	Primary Coolant	1 1/2	No	Sht. 7	CVS-VLV-179D	In	C	Y	-	Check	Self	Auto	None	-	-	-	NA	NA	NA	NA	Note 9	DCD_06.02.06-34
				1 1/2			CVS-MOV-178D	Out			14.0 ft	Globe	Motor	RM	Manual	O	O	O	FAI	RM	15	1E		
				3/4			CVS-VLV-667D	In			-	Globe	Manual	Manual	None	C	C	C	NA	NA	NA	NA		
P281	56	CVCS	Primary Coolant	1 1/2	No	Sht. 7	CVS-VLV-179A	In	C	Y	-	Check	Self	Auto	None	-	-	-	NA	NA	NA	NA	Note 9	DCD_06.02.06-34
				1 1/2			CVS-MOV-178A	Out			14.0 ft	Globe	Motor	RM	Manual	O	O	O	FAI	RM	15	1E		
				3/4			CVS-VLV-667A	In			-	Globe	Manual	Manual	None	C	C	C	NA	NA	NA	NA		
P282	56	CVCS	Primary Coolant	1 1/2	No	Sht. 7	CVS-VLV-179C	In	C	Y	-	Check	Self	Auto	None	-	-	-	NA	NA	NA	NA	Note 9	DCD_06.02.06-34
				1 1/2			CVS-MOV-178C	Out			14.0 ft	Globe	Motor	RM	Manual	O	O	O	FAI	RM	15	1E		
				3/4			CVS-VLV-667C	In			-	Globe	Manual	Manual	None	C	C	C	NA	NA	NA	NA		
P283	55	CVCS	Primary Coolant	3	No	Sht. 8	CVS-MOV-203	In	C	Y	-	Globe	Motor	Auto	RM	O	O	C	FAI	P,T+UV	15	1E	Note 9	DCD_06.02.06-34
				3			CVS-MOV-204	Out			9.0 ft	Globe	Motor	Auto	RM	O	O	C	FAI	P,T+UV	15	1E		
				3/4			CVS-VLV-202	In			-	Check	Self	Auto	None	-	-	-	NA	NA	NA	NA		
P236	56	SIS	Nitrogen Gas	1	No	Sht. 9	SIS-VLV-115	In	C	Y	-	Check	Self	Auto	None	-	-	-	NA	NA	NA	NA	Note 9	DCD_06.02.06-34
				1			SIS-AOV-114	Out			9.0 ft	Globe	Air	Auto	RM	C	C	C	FC	T	15	1E		
				3/4			SIS-VLV-156	In			-	Globe	Manual	Manual	None	C	C	C	NA	NA	NA	NA		

DCD_03.09.06-61

Table 6.2.4-3 List of Containment Penetrations and System Isolation Positions (Sheet 2 of 15)

DCD_03.09.06-61

Pen NO.	GDC	System Name	Fluid	Line Size (in.)	ESF or Support System	Valve Arragmt Figure 6.2.4-1	Valve Number	Location of Valve	Type Tests	Type C Test	Length of Pipe (Note 1)	Valve		Actuation Mode		Valve Position			Power Failure	Actuation Signal	Valve Closure (seconds)	Power Source	Remark
												Type	Operator	Primary	Secondary	Normal	Shutdown	Post-Accident					
P210	55	SIS	Borated Water	4	Yes	Sht. 10	SIS-VLV-010A	In	A	N	-	Check	Self	Auto	None	-	-	-	NA	NA	NA	NA	Note 4
				4			SIS-MOV-009A	Out			9.0 ft	Globe	Motor	RM	Manual	O	O	O	FAI	RM	20	1E	
				3/4			SIS-VLV-058A	In			-	Globe	Manual	Manual	None	C	C	C	NA	NA	NA	NA	
P227	55	SIS	Borated Water	4	Yes	Sht. 10	SIS-VLV-010B	In	A	N	-	Check	Self	Auto	None	-	-	-	NA	NA	NA	NA	Note 4
				4			SIS-MOV-009B	Out			9.0 ft	Globe	Motor	RM	Manual	O	O	O	FAI	RM	20	1E	
				3/4			SIS-VLV-058B	In			-	Globe	Manual	Manual	None	C	C	C	NA	NA	NA	NA	
P258	55	SIS	Borated Water	4	Yes	Sht. 10	SIS-VLV-010C	In	A	N	-	Check	Self	Auto	None	-	-	-	NA	NA	NA	NA	Note 4
				4			SIS-MOV-009C	Out			9.0 ft	Globe	Motor	RM	Manual	O	O	O	FAI	RM	20	1E	
				3/4			SIS-VLV-058C	In			-	Globe	Manual	Manual	None	C	C	C	NA	NA	NA	NA	
P274	55	SIS	Borated Water	4	Yes	Sht. 10	SIS-VLV-010D	In	A	N	-	Check	Self	Auto	None	-	-	-	NA	NA	NA	NA	Note 4
				4			SIS-MOV-009D	Out			9.0 ft	Globe	Motor	RM	Manual	O	O	O	FAI	RM	20	1E	
				3/4			SIS-VLV-058D	In			-	Globe	Manual	Manual	None	C	C	C	NA	NA	NA	NA	
P152	56	SIS	Borated Water	10	Yes	Sht. 11	SIS-MOV-001A	Out	A	N	39.0 ft	Gate	Motor	RM	Manual	O	O	O	FAI	RM	50	1E	Note 4 Note 7
P153	56	SIS	Borated Water	10	Yes	Sht. 11	SIS-MOV-001B	Out	A	N	39.0 ft	Gate	Motor	RM	Manual	O	O	O	FAI	RM	50	1E	Note 4 Note 7
P156	56	SIS	Borated Water	10	Yes	Sht. 11	SIS-MOV-001C	Out	A	N	39.0 ft	Gate	Motor	RM	Manual	O	O	O	FAI	RM	50	1E	Note 4 Note 7
P157	56	SIS	Borated Water	10	Yes	Sht. 11	SIS-MOV-001D	Out	A	N	39.0 ft	Gate	Motor	RM	Manual	O	O	O	FAI	RM	50	1E	Note 4 Note 7
P209	55	RHRS	Borated Water	10	No	Sht. 12	RHS-MOV-002A	In	A	N	-	Gate	Motor	RM	Manual	C	O	C	FAI	RM	50	1E	Note 4
				6			RHS-SRV-003A	In			-	Relief	Self	Auto	None	C	C	C	NA	NA	NA	NA	Note 6
				3/4			SIS-VLV-225A	In			-	Globe	Manual	Manual	None	C	C	C	NA	NA	NA	NA	
P226	55	RHRS	Borated Water	10	No	Sht. 12	RHS-MOV-002B	In	A	N	-	Gate	Motor	RM	Manual	C	O	C	FAI	RM	50	1E	Note 4
				6			RHS-SRV-003B	In			-	Relief	Self	Auto	None	C	C	C	NA	NA	NA	NA	Note 6
				3/4			SIS-VLV-225B	In			-	Globe	Manual	Manual	None	C	C	C	NA	NA	NA	NA	
P257	55	RHRS	Borated Water	10	No	Sht. 12	RHS-MOV-002C	In	A	N	-	Gate	Motor	RM	Manual	C	O	C	FAI	RM	50	1E	Note 4
				6			RHS-SRV-003C	In			-	Relief	Self	Auto	None	C	C	C	NA	NA	NA	NA	Note 6
				3/4			SIS-VLV-225C	In			-	Globe	Manual	Manual	None	C	C	C	NA	NA	NA	NA	
P273	55	RHRS	Borated Water	10	No	Sht. 12	RHS-MOV-002D	In	A	N	-	Gate	Motor	RM	Manual	C	O	C	FAI	RM	50	1E	Note 4
				6			RHS-SRV-003D	In			-	Relief	Self	Auto	None	C	C	C	NA	NA	NA	NA	Note 6
				3/4			SIS-VLV-225D	In			-	Globe	Manual	Manual	None	C	C	C	NA	NA	NA	NA	

Table 6.2.4-3 List of Containment Penetrations and System Isolation Positions (Sheet 3 of 15)

DCD_03.09.06-61

Pen NO.	GDC	System Name	Fluid	Line Size (in.)	ESF or Support System	Valve Arragmt Figure 6.2.4-1	Valve Number	Location of Valve	Type Tests	Type C Test	Length of Pipe (Note 1)	Valve		Actuation Mode		Valve Position			Power Failure	Actuation Signal	Valve Closure (seconds)	Power Source	Remark
												Type	Operator	Primary	Secondary	Normal	Shutdown	Post-Accident					
P212	55	RHRS	Borated Water	8	Yes	Sht. 13	RHS-VLV-022A	In	A	N	-	Check	Self	Auto	None	-	-	-	NA	NA	NA	NA	Note 4
				8			RHS-MOV-021A	Out			11.0 ft	Gate	Motor	RM	Manual	C	O	O	FAI	RM	40	1E	
				3/4			RHS-VLV-062A	In			-	Globe	Manual	Manual	None	C	C	C	NA	NA	NA	NA	
P225	55	RHRS	Borated Water	8	Yes	Sht. 13	RHS-VLV-022B	In	A	N	-	Check	Self	Auto	None	-	-	-	NA	NA	NA	NA	Note 4
				8			RHS-MOV-021B	Out			11.0 ft	Gate	Motor	RM	Manual	C	O	O	FAI	RM	40	1E	
				3/4			RHS-VLV-062B	In			-	Globe	Manual	Manual	None	C	C	C	NA	NA	NA	NA	
P259	55	RHRS	Borated Water	8	Yes	Sht. 13	RHS-VLV-022C	In	A	N	-	Check	Self	Auto	None	-	-	-	NA	NA	NA	NA	Note 4
				8			RHS-MOV-021C	Out			11.0 ft	Gate	Motor	RM	Manual	C	O	O	FAI	RM	40	1E	
				3/4			RHS-VLV-062C	In			-	Globe	Manual	Manual	None	C	C	C	NA	NA	NA	NA	
P272	55	RHRS	Borated Water	8	Yes	Sht. 13	RHS-VLV-022D	In	A	N	-	Check	Self	Auto	None	-	-	-	NA	NA	NA	NA	Note 4
				8			RHS-MOV-021D	Out			11.0 ft	Gate	Motor	RM	Manual	C	O	O	FAI	RM	40	1E	
				3/4			RHS-VLV-062D	In			-	Globe	Manual	Manual	None	C	C	C	NA	NA	NA	NA	
P501	57	FWS	Secondary Coolant	16	Yes	Sht. 14	FWS-SMV-512A	Out	A	N	37.0 ft	Gate	S/M	Auto	RM	O	O	C	FC	S,RCPS	5	1E	Note 5
				3			EFS-MOV-019A	Out			-	Gate	Motor	Auto	RM	O	O	O	FAI	RCPS	15	1E	
P502	57	FWS	Secondary Coolant	16	Yes	Sht. 14	FWS-SMV-512B	Out	A	N	34.0 ft	Gate	S/M	Auto	RM	O	O	C	FC	S,RCPS	5	1E	Note 5
				3			EFS-MOV-019B	Out			-	Gate	Motor	Auto	RM	O	O	O	FAI	RCPS	15	1E	
P503	57	FWS	Secondary Coolant	16	Yes	Sht. 14	FWS-SMV-512C	Out	A	N	34.0 ft	Gate	S/M	Auto	RM	O	O	C	FC	S,RCPS	5	1E	Note 5
				3			EFS-MOV-019C	Out			-	Gate	Motor	Auto	RM	O	O	O	FAI	RCPS	15	1E	
P504	57	FWS	Secondary Coolant	16	Yes	Sht. 14	FWS-SMV-512D	Out	A	N	37.0 ft	Gate	S/M	Auto	RM	O	O	C	FC	S,RCPS	5	1E	Note 5
				3			EFS-MOV-019D	Out			-	Gate	Motor	Auto	RM	O	O	O	FAI	RCPS	15	1E	
P509	57	MSS	Secondary Coolant	32	Yes	Sht. 15	MSS-SMV-515A	Out	A	N	68.0 ft	Gate	S/M	Auto	RM	O	C	C	FC	RCPS	5	1E	Note 5
				6			MSS-MOV-507A	Out			-	Gate	Motor	RM	Manual	O	O	O	FAI	RM	30	1E	
				6			EFS-MOV-101A	Out			-	Gate	Motor	RM	Manual	O	O	O	FAI	RM	30	1E	
				6			MSS-SRV-509A	Out			-	Relief	Self	Auto	None	C	C	C	NA	NA	NA	NA	
				6			MSS-SRV-510A	Out			-	Relief	Self	Auto	None	C	C	C	NA	NA	NA	NA	
				6			MSS-SRV-511A	Out			-	Relief	Self	Auto	None	C	C	C	NA	NA	NA	NA	
				6			MSS-SRV-512A	Out			-	Relief	Self	Auto	None	C	C	C	NA	NA	NA	NA	
				6			MSS-SRV-513A	Out			-	Relief	Self	Auto	None	C	C	C	NA	NA	NA	NA	
				6			MSS-SRV-514A	Out			-	Relief	Self	Auto	None	C	C	C	NA	NA	NA	NA	
				4			MSS-HCV-565	Out			-	Globe	Air	Auto	RM	C	C	C	FC	RCPS	20	1E	
				2			MSS-MOV-701A	Out			-	Globe	Motor	RM	Manual	O	O	O	FAI	RM	15	1E	
				3/4			MSS-VLV-533A	Out			-	Globe	Manual	Manual	None	C	C	C	NA	NA	NA	NA	

Table 6.2.4-3 List of Containment Penetrations and System Isolation Positions (Sheet 4 of 15)

Pen NO.	GDC	System Name	Fluid	Line Size (in.)	ESF or Support System	Valve Arragmt Figure 6.2.4-1	Valve Number	Location of Valve	Type Tests	Type C Test	Length of Pipe (Note 1)	Valve		Actuation Mode		Valve Position			Power Failure	Actuation Signal	Valve Closure (seconds)	Power Source	Remark
												Type	Operator	Primary	Secondary	Normal	Shutdown	Post-Accident					
P510	57	MSS	Secondary Coolant	32	Yes	Sht. 15	MSS-SMV-515B	Out	A	N	65.0 ft	Gate	S/M	Auto	RM	O	C	C	FC	RCPS	5	1E	Note 5
				6			MSS-MOV-507B	Out			-	Gate	Motor	RM	Manual	O	O	O	FAI	RM	30	1E	
				6			EFS-MOV-101B	Out			-	Gate	Motor	RM	Manual	O	O	O	FAI	RM	30	1E	
				6			MSS-SRV-509B	Out			-	Relief	Self	Auto	None	C	C	C	NA	NA	NA	NA	
				6			MSS-SRV-510B	Out			-	Relief	Self	Auto	None	C	C	C	NA	NA	NA	NA	
				6			MSS-SRV-511B	Out			-	Relief	Self	Auto	None	C	C	C	NA	NA	NA	NA	
				6			MSS-SRV-512B	Out			-	Relief	Self	Auto	None	C	C	C	NA	NA	NA	NA	
				6			MSS-SRV-513B	Out			-	Relief	Self	Auto	None	C	C	C	NA	NA	NA	NA	
				6			MSS-SRV-514B	Out			-	Relief	Self	Auto	None	C	C	C	NA	NA	NA	NA	
				4			MSS-HCV-575	Out			-	Globe	Air	Auto	RM	C	C	C	FC	RCPS	20	1E	
				2			MSS-MOV-701B	Out			-	Globe	Motor	RM	Manual	O	O	O	FAI	RM	15	1E	
				3/4			MSS-VLV-533B	Out			-	Globe	Manual	Manual	None	C	C	C	NA	NA	NA	NA	
P511	57	MSS	Secondary Coolant	32	Yes	Sht. 15	MSS-SMV-515C	Out	A	N	65.0 ft	Gate	S/M	Auto	RM	O	C	C	FC	RCPS	5	1E	Note 5
				6			MSS-MOV-507C	Out			-	Gate	Motor	RM	Manual	O	O	O	FAI	RM	30	1E	
				6			EFS-MOV-101C	Out			-	Gate	Motor	RM	Manual	O	O	O	FAI	RM	30	1E	
				6			MSS-SRV-509C	Out			-	Relief	Self	Auto	None	C	C	C	NA	NA	NA	NA	
				6			MSS-SRV-510C	Out			-	Relief	Self	Auto	None	C	C	C	NA	NA	NA	NA	
				6			MSS-SRV-511C	Out			-	Relief	Self	Auto	None	C	C	C	NA	NA	NA	NA	
				6			MSS-SRV-512C	Out			-	Relief	Self	Auto	None	C	C	C	NA	NA	NA	NA	
				6			MSS-SRV-513C	Out			-	Relief	Self	Auto	None	C	C	C	NA	NA	NA	NA	
				6			MSS-SRV-514C	Out			-	Relief	Self	Auto	None	C	C	C	NA	NA	NA	NA	
				4			MSS-HCV-585	Out			-	Globe	Air	Auto	RM	C	C	C	FC	RCPS	20	1E	
				2			MSS-MOV-701C	Out			-	Globe	Motor	RM	Manual	O	O	O	FAI	RM	15	1E	
				3/4			MSS-VLV-533C	Out			-	Globe	Manual	Manual	None	C	C	C	NA	NA	NA	NA	

DCD_03.09.06-61

Table 6.2.4-3 List of Containment Penetrations and System Isolation Positions (Sheet 5 of 15)

DCD_03.09.06-61

Pen NO.	GDC	System Name	Fluid	Line Size (in.)	ESF or Support System	Valve Arragmt Figure 6.2.4-1	Valve Number	Location of Valve	Type Tests	Type C Test	Length of Pipe (Note 1)	Valve		Actuation Mode		Valve Position			Power Failure	Actuation Signal	Valve Closure (seconds)	Power Source	Remark
												Type	Operator	Primary	Secondary	Normal	Shutdown	Post-Accident					
P512	57	MSS	Secondary Coolant	32	Yes	Sht. 15	MSS-SMV-515D	Out	A	N	68.0 ft	Gate	S/M	Auto	RM	O	C	C	FC	RCPS	5	1E	Note 5
				6			MSS-MOV-507D	Out			-	Gate	Motor	RM	Manual	O	O	O	FAI	RM	30	1E	
				6			EFS-MOV-101D	Out			-	Gate	Motor	RM	Manual	O	O	O	FAI	RM	30	1E	
				6			MSS-SRV-509D	Out			-	Relief	Self	Auto	None	C	C	C	NA	NA	NA	NA	
				6			MSS-SRV-510D	Out			-	Relief	Self	Auto	None	C	C	C	NA	NA	NA	NA	
				6			MSS-SRV-511D	Out			-	Relief	Self	Auto	None	C	C	C	NA	NA	NA	NA	
				6			MSS-SRV-512D	Out			-	Relief	Self	Auto	None	C	C	C	NA	NA	NA	NA	
				6			MSS-SRV-513D	Out			-	Relief	Self	Auto	None	C	C	C	NA	NA	NA	NA	
				6			MSS-SRV-514D	Out			-	Relief	Self	Auto	None	C	C	C	NA	NA	NA	NA	
				4			MSS-HCV-595	Out			-	Globe	Air	Auto	RM	C	C	C	FC	RCPS	20	1E	
				2			MSS-MOV-701D	Out			-	Globe	Motor	RM	Manual	O	O	O	FAI	RM	15	1E	
				3/4			MSS-VLV-533D	Out			-	Globe	Manual	Manual	None	C	C	C	NA	NA	NA	NA	
P214	56	CSS	Borated Water	8	Yes	Sht. 16	CSS-VLV-005A	In	A	N	-	Check	Self	Auto	None	-	-	-	NA	NA	NA	NA	Note 4
				8			CSS-MOV-004A	Out			9.0 ft	Gate	Motor	Auto	RM	C	C	O	FAI	P	40	1E	
				3/4			CSS-VLV-023A	In			-	Globe	Manual	Manual	None	C	C	C	NA	NA	NA	NA	
P224	56	CSS	Borated Water	8	Yes	Sht. 16	CSS-VLV-005B	In	A	N	-	Check	Self	Auto	None	-	-	-	NA	NA	NA	NA	Note 4
				8			CSS-MOV-004B	Out			9.0 ft	Gate	Motor	Auto	RM	C	C	O	FAI	P	40	1E	
				3/4			CSS-VLV-023B	In			-	Globe	Manual	Manual	None	C	C	C	NA	NA	NA	NA	
P261	56	CSS	Borated Water	8	Yes	Sht. 16	CSS-VLV-005C	In	A	N	-	Check	Self	Auto	None	-	-	-	NA	NA	NA	NA	Note 4
				8			CSS-MOV-004C	Out			9.0 ft	Gate	Motor	Auto	RM	C	C	O	FAI	P	40	1E	
				3/4			CSS-VLV-023C	In			-	Globe	Manual	Manual	None	C	C	C	NA	NA	NA	NA	
P271	56	CSS	Borated Water	8	Yes	Sht. 16	CSS-VLV-005D	In	A	N	-	Check	Self	Auto	None	-	-	-	NA	NA	NA	NA	Note 4
				8			CSS-MOV-004D	Out			9.0 ft	Gate	Motor	Auto	RM	C	C	O	FAI	P	40	1E	
				3/4			CSS-VLV-023D	In			-	Globe	Manual	Manual	None	C	C	C	NA	NA	NA	NA	
P151	56	CSS	Borated Water	14	Yes	Sht. 18	CSS-MOV-001A	Out	A	N	39.0 ft	Gate	Motor	RM	Manual	O	C	O	FAI	RM	60	1E	Note 4 Note 7
P154	56	CSS	Borated Water	14	Yes	Sht. 18	CSS-MOV-001B	Out	A	N	39.0 ft	Gate	Motor	RM	Manual	O	C	O	FAI	RM	60	1E	Note 4 Note 7
P155	56	CSS	Borated Water	14	Yes	Sht. 18	CSS-MOV-001C	Out	A	N	39.0 ft	Gate	Motor	RM	Manual	O	C	O	FAI	RM	60	1E	Note 4 Note 7
P158	56	CSS	Borated Water	14	Yes	Sht. 18	CSS-MOV-001D	Out	A	N	39.0 ft	Gate	Motor	RM	Manual	O	C	O	FAI	RM	60	1E	Note 4 Note 7
P220	56	CSS	Silicone Oil	3/4	Yes	Sht. 17	-	-	A	N	-	-	-	-	-	-	-	-	-	-	-	-	Note 8
P222	56	CSS	Silicone Oil	3/4	Yes	Sht. 17	-	-	A	N	-	-	-	-	-	-	-	-	-	-	-	-	Note 8
P416	56	CSS	Silicone Oil	3/4	Yes	Sht. 17	-	-	A	N	-	-	-	-	-	-	-	-	-	-	-	-	Note 8

Table 6.2.4-3 List of Containment Penetrations and System Isolation Positions (Sheet 6 of 15)

Pen NO.	GDC	System Name	Fluid	Line Size (in.)	ESF or Support System	Valve Arragmt Figure 6.2.4-1	Valve Number	Location of Valve	Type Tests	Type C Test	Length of Pipe (Note 1)	Valve		Actuation Mode		Valve Position			Power Failure	Actuation Signal	Valve Closure (seconds)	Power Source	Remark	
												Type	Operator	Primary	Secondary	Normal	Shutdown	Post-Accident						
P417	56	CSS	Silicone Oil	3/4	Yes	Sht. 17	-	-	A	N	-	-	-	-	-	-	-	-	-	-	-	-	Note 8	
P405L	56	CSS	Silicone Oil	3/4	No	Sht. 17	-	-	A	N	-	-	-	-	-	-	-	-	-	-	-	-	Note 8	
P234	56	CCWS	Water with corrosion inhibitor	8	Yes	Sht. 19	NCS-VLV-403A	In	C	Y	-	Check	Self	Auto	None	-	-	-	NA	NA	NA	NA	Note 9	DCD_06.02.06-34 DCD_09.02.02-58
				8			NCS-MOV-402A	Out			10.0 ft	Gate	Motor	~~Auto~~RM	~~RM~~Manual	O	O	~~C~~O	FAI	~~P~~NA	40	1E		
				~~4~~			~~NCS-MOV-445A~~	~~Out~~				~~Globe~~	~~Motor~~	~~Manual~~	~~None~~	~~C~~	~~C~~	~~O~~	~~FAI~~	~~NA~~	~~20~~	~~1E~~		
				3/4			NCS-VLV-452A	In			-	Globe	Manual	Manual	None	C	C	C	NA	NA	NA	NA		
P249	56	CCWS	Water with corrosion inhibitor	8	Yes	Sht. 19	NCS-VLV-403B	In	C	Y	-	Check	Self	Auto	None	-	-	-	NA	NA	NA	NA	Note 9	DCD_06.02.06-34 DCD_09.02.02-58
				8			NCS-MOV-402B	Out			10.0 ft	Gate	Motor	~~Auto~~RM	~~RM~~Manual	O	O	~~C~~O	FAI	~~P~~NA	40	1E		
				~~4~~			~~NCS-MOV-445B~~	~~Out~~				~~Globe~~	~~Motor~~	~~Manual~~	~~None~~	~~C~~	~~C~~	~~O~~	~~FAI~~	~~NAI~~	~~20~~	~~1E~~		
				3/4			NCS-VLV-452B	In			-	Globe	Manual	Manual	None	C	C	C	NA	NA	NA	NA		
P232	56	CCWS	Water with corrosion inhibitor	8	Yes	Sht. 20	NCS-MOV-436A	In	C	Y	-	Gate	Motor	~~Auto~~RM	~~RM~~None	O	O	~~C~~O	FAI	~~P~~NA	40	1E	Note 9	DCD_09.02.02-58 DCD_06.02.06-34
				8			NCS-MOV-438A	Out			10.0 ft	Gate	Motor	~~Auto~~RM	~~RM~~Manual	O	O	~~C~~O	FAI	~~P~~NA	40	1E		
				~~4~~			~~NCS-MOV-447A~~	~~In~~				~~Globe~~	~~Motor~~	~~Manual~~	~~None~~	~~C~~	~~C~~	~~O~~	~~FAI~~	~~NA~~	~~20~~	~~1E~~		
				~~4~~			~~NCS-MOV-448A~~	~~Out~~				~~Globe~~	~~Motor~~	~~Manual~~	~~None~~	~~C~~	~~C~~	~~O~~	~~FAI~~	~~NA~~	~~20~~	~~1E~~		
				3/4			NCS-VLV-437A	In			-	Check	Self	Auto	None	-	-	-	NA	NA	NA	NA		
P251	56	CCWS	Water with corrosion inhibitor	8	Yes	Sht. 20	NCS-MOV-436B	In	C	Y	-	Gate	Motor	~~Auto~~RM	~~RM~~None	O	O	~~C~~O	FAI	~~P~~NA	40	1E	Note 9	DCD_09.02.02-58 DCD_06.02.06-34
				8			NCS-MOV-438B	Out			10.0 ft	Gate	Motor	~~Auto~~RM	~~RM~~Manual	O	O	~~C~~O	FAI	~~P~~NA	40	1E		
				~~4~~			~~NCS-MOV-447B~~	~~In~~			~~–~~	~~Globe~~	~~Motor~~	~~Manual~~	~~None~~	~~C~~	~~C~~	~~O~~	~~FAI~~	~~NA~~	~~20~~	~~1E~~		
				~~4~~			~~NCS-MOV-448B~~	~~Out~~			~~–~~	~~Globe~~	~~Motor~~	~~Manual~~	~~None~~	~~C~~	~~C~~	~~O~~	~~FAI~~	~~NA~~	~~20~~	~~1E~~		
				3/4			NCS-VLV-437B	In			-	Check	Self	Auto	None	-	-	-	NA	NA	NA	NA		
P233	57	CCWS	Water with corrosion inhibitor	4	No	Sht. 21	NCS-MOV-511	Out	A	N	9.0 ft	Gate	Motor	Auto	RM	O	O	C	FAI	T	20	1E	Note 5	
P235	57	CCWS		4	No	Sht. 21	NCS-MOV-517	Out	A	N	9.0 ft	Gate	Motor	Auto	RM	C	C	C	FAI	T	20	1E	Note 5	
P252	57	CCWS		8	No	Sht. 22	NCS-MOV-531	Out	A	N	9.0 ft	Gate	Motor	Auto	RM	O	O	C	FAI	T	40	1E	Note 5	
P250	57	CCWS		8	No	Sht. 22	NCS-MOV-537	Out	A	N	9.0 ft	Gate	Motor	Auto	RM	O	O	C	FAI	T	40	1E	Note 5	
P276R	56	WMS	Gas	3/4	No	Sht. 23	LMS-AOV-052	In	C	Y	-	Dia	Air	Auto	RM	O	O	C	FC	T	15	1E	Note 9	DCD_06.02.06-34
				3/4			LMS-AOV-053	Out			11.0 ft	Dia	Air	Auto	RM	C	C	C	FC	T	15	1E		
P284	56	WMS	Gas	2	No	Sht. 24	LMS-AOV-055	In	C	Y	-	Dia	Air	Auto	RM	O	O	C	FC	T	15	1E	Note 9	DCD_06.02.06-34
				2			LMS-AOV-056	Out			16.0 ft	Dia	Air	Auto	RM	O	O	C	FC	T	15	1E		
				2			LMS-AOV-060	Out			-	Dia	Air	Auto	RM	O	O	C	FC	T	15	1E		
P205	56	WMS	Borated Water	3	No	Sht. 25	LMS-LCV-010A	In	C	Y	-	Dia	Air	Auto	RM	C	C	C	FC	T	15	1E	Note 9	DCD_06.02.06-34
				3			LMS-LCV-010B	Out			9.0 ft	Dia	Air	Auto	RM	O	O	C	FC	T	15	1E		

Table 6.2.4-3 List of Containment Penetrations and System Isolation Positions (Sheet 7 of 15)

Pen NO.	GDC	System Name	Fluid	Line Size (in.)	ESF or Support System	Valve Arragmt Figure 6.2.4-1	Valve Number	Location of Valve	Type Tests	Type C Test	Length of Pipe (Note 1)	Valve		Actuation Mode		Valve Position			Power Failure	Actuation Signal	Valve Closure (seconds)	Power Source	Remark
												Type	Operator	Primary	Secondary	Normal	Shutdown	Post-Accident					
P207	56	WMS	Primary Coolant	2	No	Sht. 26	LMS-AOV-104	In	C	Y	-	Dia	Air	Auto	RM	C	C	C	FC	T	15	1E	Note 9
				2			LMS-AOV-105	Out			9.0 ft	Dia	Air	Auto	RM	C	C	C	FC	T	15	1E	
P267L	55	PSS	Primary Coolant	3/4	No	Sht. 27	PSS-AOV-003	In	C	Y	-	Globe	Air	Auto	RM	C	C	C	FC	T	15	1E	Note 9
				3/4			PSS-MOV-006	In			-	Globe	Motor	Auto	RM	O	O	C	FAI	T	15	1E	
				3/4			PSS-MOV-013	In			-	Globe	Motor	Auto	RM	C	C	C	FAI	T	15	1E	
				3/4			PSS-MOV-031A	Out			14.0 ft	Globe	Motor	Auto	RM	O	O	C	FAI	T	15	1E	
P269R	55	PSS	Primary Coolant	3/4	No	Sht. 28	PSS-MOV-023	In	C	Y	-	Globe	Motor	Auto	RM	O	O	C	FAI	T	15	1E	Note 9
				3/4			PSS-MOV-031B	Out			14.0 ft	Globe	Motor	Auto	RM	O	O	C	FAI	T	15	1E	
P267R	56	PSS	Borated Water	3/4	No	Sht. 29	PSS-AOV-062A	In	C	Y	-	Globe	Air	Auto	RM	C	C	C	FC	T	15	1E	Note 9
				3/4			PSS-AOV-062B	In			-	Globe	Air	Auto	RM	C	C	C	FC	T	15	1E	
				3/4			PSS-AOV-062C	In			-	Globe	Air	Auto	RM	C	C	C	FC	T	15	1E	
				3/4			PSS-AOV-062D	In			-	Globe	Air	Auto	RM	C	C	C	FC	T	15	1E	
				3/4			PSS-AOV-063	Out			13.0 ft	Globe	Air	Auto	RM	O	O	C	FC	T	15	1E	
P270	56	PSS	Containment Atmosphere	3/4	No	Sht. 30	PSS-VLV-072	In	C	Y	-	Check	Self	Auto	None	-	-	-	NA	NA	NA	NA	Note 9
				3/4			PSS-VLV-091	In			-	Globe	Manual	Manual	None	C	C	C	NA	NA	NA	NA	
				3/4			PSS-MOV-071	Out			9.0 ft	Globe	Motor	RM	Manual	C	C	C	FAI	RM	15	1E	
P237R	57	SGBDS	Secondary	3/4	No	Sht. 31	SGS-AOV-031A	Out	A	N	11.0 ft	Globe	Air	Auto	RM	O	O	C	FC	T	15	1E	Note 5
P237L	57	SGBDS	Coolant	3/4	No	Sht. 31	SGS-AOV-031B	Out	A	N	12.0 ft	Globe	Air	Auto	RM	O	O	C	FC	T	15	1E	Note 5
P239R	57	SGBDS	Secondary	3/4	No	Sht. 31	SGS-AOV-031C	Out	A	N	11.0 ft	Globe	Air	Auto	RM	O	O	C	FC	T	15	1E	Note 5
P239L	57	SGBDS	Coolant	3/4	No	Sht. 31	SGS-AOV-031D	Out	A	N	12.0 ft	Globe	Air	Auto	RM	O	O	C	FC	T	15	1E	Note 5
P505	57	SGBDS	Secondary	4	No	Sht. 31	SGS-AOV-001A	Out	A	N	22.0 ft	Globe	Air	Auto	RM	O	O	C	FC	T	20	1E	Note 5
P506	57	SGBDS	Coolant	4	No	Sht. 31	SGS-AOV-001B	Out	A	N	26.0 ft	Globe	Air	Auto	RM	O	O	C	FC	T	20	1E	Note 5
P507	57	SGBDS		4	No	Sht. 31	SGS-AOV-001C	Out	A	N	26.0 ft	Globe	Air	Auto	RM	O	O	C	FC	T	20	1E	Note 5
P508	57	SGBDS		4	No	Sht. 31	SGS-AOV-001D	Out	A	N	22.0 ft	Globe	Air	Auto	RM	O	O	C	FC	T	20	1E	Note 5
P161	56	RWS	Borated Water	6	No	Sht. 32	RWS-MOV-002	In	C	Y	-	Gate	Motor	Auto	RM	O	O	C	FAI	T	30	1E	Note 9
				6			RWS-MOV-004	Out			19.0 ft	Gate	Motor	Auto	RM	O	O	C	FAI	T	30	1E	
				3/4			RWS-VLV-003	In			-	Check	Self	Auto	None	-	-	-	NA	NA	NA	NA	
P162	56	RWS	Borated	4	No	Sht. 33	RWS-VLV-023	In	C	Y	-	Check	Self	Auto	None	-	-	-	NA	NA	NA	NA	Note 9
			Water	4			RWS-AOV-022	Out			29.0 ft	Dia	Air	Auto	RM	O	O	C	FC	T	20	1E	
				3/4			RWS-VLV-073	In			-	Globe	Manual	Manual	None	C	C	C	NA	NA	NA	NA	

DCD_03.09.06-61

DCD_06.02.06-34

DCD_06.02.06-34

DCD_06.02.06-34

DCD_06.02.06-34

DCD_06.02.06-34

DCD_06.02.06-34

DCD_06.02.06-34

Table 6.2.4-3 List of Containment Penetrations and System Isolation Positions (Sheet 8 of 15)

Pen NO.	GDC	System Name	Fluid	Line Size (in.)	ESF or Support System	Valve Arragmt Figure 6.2.4-1	Valve Number	Location of Valve	Type Tests	Type C Test	Length of Pipe (Note 1)	Valve		Actuation Mode		Valve Position			Power Failure	Actuation Signal	Valve Closure (seconds)	Power Source	Remark
												Type	Operator	Primary	Secondary	Normal	Shutdown	Post-Accident					
P253	56	PMWS	Deminrralized	2	No	Sht. 34	DWS-VLV-005	In	C	Y	-	Check	Self	Auto	None	-	-	-	NA	NA	NA	NA	Note 9
			Water	2			DWS-VLV-004	Out			9.0 ft	Dia	Manual	Manual	None	C	C	C	NA	NA	NA	NA	
				3/4			DWS-VLV-006	In			-	Dia	Manual	Manual	None	C	C	C	NA	NA	NA	NA	
P245	56	IAS	Compressed Air	2	No	Sht. 35	IAS-VLV-003	In	C	Y	-	Check	Self	Auto	None	-	-	-	NA	NA	NA	NA	Note 9
				2			IAS-MOV-002	Out			9.0 ft	Globe	Motor	Auto	RM	O	O	C	FAI	T	15	1E	
				3/4			IAS-VLV-004	In			-	Globe	Manual	Manual	None	C	C	C	NA	NA	NA	NA	
P248	56	FSS	Fire Water	3	No	Sht. 36	FSS-VLV-003	In	C	Y	-	Check	Self	Auto	None	-	-	-	NA	NA	NA	NA	Note 9
				3			FSS-AOV-001	Out			9.0 ft	Globe	Air	Auto	RM	C	C	C	FC	T	15	1E	
				3/4			FSS-VLV-002	In			-	Globe	Manual	Manual	None	C	C	C	NA	NA	NA	NA	
P238	56	FSS	Fire Water	6	No	Sht. 37	FSS-VLV-006	In	C	Y	-	Check	Self	Auto	None	-	-	-	NA	NA	NA	NA	Note 9
				6			FSS-MOV-004	Out			10.0 ft	Gate	Motor	Auto	RM	C	C	C	FAI	RM	30	1E	
				3/4			FSS-VLV-005	In			-	Globe	Manual	Manual	None	C	C	C	NA	NA	NA	NA	
P230	56	SSAS	Compressed Air	2	No	Sht. 38	SAS-VLV-103	In	C	Y	-	Check	Self	Auto	None	-	-	-	NA	NA	NA	NA	Note 9
				2			SAS-VLV-101	Out			9.0 ft	Globe	Manual	Manual	None	C	C	C	NA	NA	NA	NA	
				3/4			SAS-VLV-102	In			-	Globe	Manual	Manual	None	C	C	C	NA	NA	NA	NA	
P200	-	-	(Fuel Transfer Tube)	22	No	Sht. 39	-	-	B	N	-	Flange	NA	-	-	C	C	C	NA	NA	NA	NA	
P451	56	HVAC	Containment Atmosphere	36	No	Sht. 40	VCS-AOV-305	In	C	Y	-	B-fly	Air	Auto	RM	C	O	C	FC	V	5	1E	Note 9
				36			VCS-AOV-304	Out			13.0 ft	B-fly	Air	Auto	RM	C	O	C	FC	V	5	1E	
P452	56	HVAC	Containment Atmosphere	36	No	Sht. 40	VCS-AOV-306	In	C	Y	-	B-fly	Air	Auto	RM	C	O	C	FC	V	5	1E	Note 9
				36			VCS-AOV-307	Out			9.0 ft	B-fly	Air	Auto	RM	C	O	C	FC	V	5	1E	
P410	56	HVAC	Containment Atmosphere	8	No	Sht. 41	VCS-AOV-356	In	C	Y	-	B-fly	Air	Auto	RM	C	C	C	FC	V	5	1E	Note 9
				8			VCS-AOV-357	Out			10.0 ft	B-fly	Air	Auto	RM	C	C	C	FC	V	5	1E	
P401	56	HVAC	Containment Atmosphere	8	No	Sht. 41	VCS-AOV-355	In	C	Y	-	B-fly	Air	Auto	RM	C	C	C	FC	V	5	1E	Note 9
				8			VCS-AOV-354	Out			10.0 ft	B-fly	Air	Auto	RM	C	C	C	FC	V	5	1E	
P262R	56	HVAC	Silicone Oil	3/4	No	Sht. 42	-	-	A	N	-	-	-	-		-	-	-	-	-	-	-	Note 8
P262L	56	HVAC	Silicone Oil	3/4	No	Sht. 42	-	-	A	N	-	-	-	-		-	-	-	-	-	-	-	Note 8
P408	56	VWS	Chilled Water	10	No	Sht. 43	VWS-VLV-421	In	C	Y	-	Check	Self	Auto	None	-	-	-	NA	NA	NA	NA	Note 9
				10			VWS-MOV-403	Out			9.0 ft	Gate	Motor	Auto	RM	O	C	C	FAI	T	50	1E	
				3/4			VWS-VLV-426	In			-	Globe	Manual	Manual	None	C	C	C	NA	NA	NA	NA	
P409	56	VWS	Chilled Water	10	No	Sht. 43	VWS-MOV-422	In	C	Y	-	Gate	Motor	Auto	RM	O	O	C	FAI	T	50	1E	Note 9
				10			VWS-MOV-407	Out			9.0 ft	Gate	Motor	Auto	RM	O	C	C	FAI	T	50	1E	
				3/4			VWS-VLV-423	In			-	Check	Self	Auto	None	-	-	-	NA	NA	NA	NA	

DCD_03.09.06-61

DCD_06.02.06-34

Table 6.2.4-3 List of Containment Penetrations and System Isolation Positions (Sheet 9 of 15)

Pen NO.	GDC	System Name	Fluid	Line Size (in.)	ESF or Support System	Valve Arragmt Figure 6.2.4-1	Valve Number	Location of Valve	Type Tests	Type C Test	Length of Pipe (Note 1)	Valve		Actuation Mode		Valve Position			Power Failure	Actuation Signal	Valve Closure (seconds)	Power Source	Remark
												Type	Operator	Primary	Secondary	Normal	Shutdown	Post-Accident					
P265	56	RMS	Containment Atmosphere	1	No	Sht. 44	RMS-VLV-005	In	C	Y	-	Check	Self	Auto	None	-	-	-	NA	NA	NA	NA	Note 9
				1			RMS-MOV-003	Out			9.0 ft	Globe	Motor	Auto	RM	O	O	C	FAI	T	15	1E	
				3/4			RMS-VLV-004	in			-	Globe	Manual	Manual	None	C	C	C	NA	NA	NA	NA	
P266	56	RMS	Containment Atmosphere	1	No	Sht. 44	RMS-MOV-001	In	C	Y	-	Globe	Motor	Auto	RM	O	O	C	FAI	T	15	1E	Note 9
				1			RMS-MOV-002	Out			9.0 ft	Globe	Motor	Auto	RM	O	O	C	FAI	T	15	1E	
P231	56	ICIGS	Carbon Dioxide	3/4	No	Sht. 45	IGS-AOV-002	In	C	Y	-	Dia	Air	Auto	RM	C	C	C	FC	T	15	1E	Note 9
				3/4			IGS-AOV-001	Out			9.0 ft	Dia	Air	Auto	RM	C	C	C	FC	T	15	1E	
P405R	56	LTS	Containment Atmosphere	3/4	No	Sht. 47	LTS-VLV-002	In	C	Y	-	Globe	Manual	Manual	None	C	C	C	NA	NA	NA	NA	Note 9
							LTS-VLV-001	Out			9.0 ft	Globe	Manual	Manual	None	C	C	C	NA	NA	NA	NA	
P223	56	LTS	Containment Atmosphere	3/4	No	Sht. 47	-	In	B	N	-	Flange	NA	Manual	None	C	C	C	NA	NA	NA	NA	
							-	Out			-	Flange	NA	Manual	None	C	C	C	NA	NA	NA	NA	
P216	56	LTS	Containment Atmosphere	3/4	No	Sht. 46	-	In	B	N	-	Flange	NA	Manual	None	C	C	C	NA	NA	NA	NA	
							-	Out			-	Flange	NA	Manual	None	C	C	C	NA	NA	NA	NA	
P218	56	LTS	Containment Atmosphere	3/4	No	Sht. 46	-	In	B	N	-	Flange	NA	Manual	None	C	C	C	NA	NA	NA	NA	
							-	Out			-	Flange	NA	Manual	None	C	C	C	NA	NA	NA	NA	
P418R	56	RLS	Containment Atmosphere	1 1/2	No	Sht. 48	-	In	B	N	-	Flange	NA	Manual	None	C	C	C	NA	NA	NA	NA	
							-	Out			-	Flange	NA	Manual	None	C	C	C	NA	NA	NA	NA	
P418L	56	RLS	Containment Atmosphere	1 1/2	No	Sht. 48	-	In	B	N	-	Flange	NA	Manual	None	C	C	C	NA	NA	NA	NA	
							-	Out			-	Flange	NA	Manual	None	C	C	C	NA	NA	NA	NA	
P520	56	-	-	-	-	Sht. 49	-	NA	B	N	-	None	None	Manual	Manual	C	C	C	NA	NA	NA	NA	
P530	56	-	-	-	-	Sht. 49	-	NA	B	N	-	None	None	Manual	Manual	C	C	C	NA	NA	NA	NA	
P540	56	-	-	-	-	Sht. 50	-	NA	B	N	-	None	None	Manual	Manual	C	C	C	NA	NA	NA	NA	
P208	-	(Spare)	-	-	-	Sht. 52	-	-	A	N	-	-	-	-	-	-	-	-	-	-	-	-	
P213	-	(Spare)	-	-	-	Sht. 52	-	-	A	N	-	-	-	-	-	-	-	-	-	-	-	-	
P215	-	(Spare)	-	-	-	Sht. 52	-	-	A	N	-	-	-	-	-	-	-	-	-	-	-	-	
P246	-	(Spare)	-	-	-	Sht. 52	-	-	A	N	-	-	-	-	-	-	-	-	-	-	-	-	
P254	-	(Spare)	-	-	-	Sht. 52	-	-	A	N	-	-	-	-	-	-	-	-	-	-	-	-	
P268	-	(Spare)	-	-	-	Sht. 52	-	-	A	N	-	-	-	-	-	-	-	-	-	-	-	-	
P269L	-	(Spare)	-	-	-	Sht. 52	-	-	A	N	-	-	-	-	-	-	-	-	-	-	-	-	
P275	-	(Spare)	-	-	-	Sht. 52	-	-	A	N	-	-	-	-	-	-	-	-	-	-	-	-	
P285	-	(Spare)	-	-	-	Sht. 52	-	-	A	N	-	-	-	-	-	-	-	-	-	-	-	-	
P301	-	(Spare)	-	-	-	Sht. 52	-	-	A	N	-	-	-	-	-	-	-	-	-	-	-	-	

DCD_03.09.06-61

DCD_06.02.06-34

DCD_06.02.06-34

DCD_06.02.06-34

DCD_06.02.06-34

Table 6.2.4-3 List of Containment Penetrations and System Isolation Positions (Sheet 10 of 15)

Pen NO.	GDC	System Name	Fluid	Line Size (in.)	ESF or Support System	Valve Arragmt Figure 6.2.4-1	Valve Number	Location of Valve	Type Tests	Type C Test	Length of Pipe (Note 1)	Valve		Actuation Mode		Valve Position			Power Failure	Actuation Signal	Valve Closure (seconds)	Power Source	Remark
												Type	Operator	Primary	Secondary	Normal	Shutdown	Post-Accident					
P406	-	(Spare)	-	-	-	Sht. 52	-	-	A	N	-	-	-	-	-	-	-	-	-	-	-	-	
P407	-	(Spare)	-	-	-	Sht. 52	-	-	A	N	-	-	-	-	-	-	-	-	-	-	-	-	
P419	-	(Spare)	-	-	-	Sht. 52	-	-	A	N	-	-	-	-	-	-	-	-	-	-	-	-	
P420	-	(Spare)	-	-	-	Sht. 52	-	-	A	N	-	-	-	-	-	-	-	-		-	-	-	
E601	-	(Electric)	-	-	-	Sht. 51	-	-	B	N	-	-	-	-	-	-	-	-	-	-	-	-	
E602	-	(Electric)	-	-	-	Sht. 51	-	-	B	N	-	-	-	-	-	-	-	-	-	-	-	-	
E603	-	(Electric)	-	-	-	Sht. 51	-	-	B	N	-	-	-	-	-	-	-	-	-	-	-	-	
E604	-	(Electric)	-	-	-	Sht. 51	-	-	B	N	-	-	-	-	-	-	-	-	-	-	-	-	
E605	-	(Electric)	-	-	-	Sht. 51	-	-	B	N	-	-	-	-	-	-	-	-	-	-	-	-	
E606	-	(Electric)	-	-	-	Sht. 51	-	-	B	N	-	-	-	-	-	-	-	-	-	-	-	-	
E607	-	(Electric)	-	-	-	Sht. 51	-	-	B	N	-	-	-	-	-	-	-	-	-	-	-	-	
E608	-	(Electric)	-	-	-	Sht. 51	-	-	B	N	-	-	-	-	-	-	-	-	-	-	-	-	
E609	-	(Electric)	-	-	-	Sht. 51	-	-	B	N	-	-	-	-	-	-	-	-	-	-	-	-	
E610	-	(Electric)	-	-	-	Sht. 51	-	-	B	N	-	-	-	-	-	-	-	-	-	-	-	-	
E611	-	(Electric)	-	-	-	Sht. 51	-	-	B	N	-	-	-	-	-	-	-	-	-	-	-	-	
E612	-	(Electric)	-	-	-	Sht. 51	-	-	B	N	-	-	-	-	-	-	-	-	-	-	-	-	
E613	-	(Electric)	-	-	-	Sht. 51	-	-	B	N	-	-	-	-	-	-	-	-	-	-	-	-	
E614	-	(Electric)	-	-	-	Sht. 51	-	-	B	N	-	-	-	-	-	-	-	-	-	-	-	-	
E615	-	(Electric)	-	-	-	Sht. 51	-	-	B	N	-	-	-	-	-	-	-	-	-	-	-	-	
E616	-	(Electric)	-	-	-	Sht. 51	-	-	B	N	-	-	-	-	-	-	-	-	-	-	-	-	
E617	-	(Electric)	-	-	-	Sht. 51	-	-	B	N	-	-	-	-	-	-	-	-	-	-	-	-	
E620	-	(Electric)	-	-	-	Sht. 51	-	-	B	N	-	-	-	-	-	-	-	-	-	-	-	-	
E621	-	(Electric)	-	-	-	Sht. 51	-	-	B	N	-	-	-	-	-	-	-	-	-	-	-	-	
E622	-	(Electric)	-	-	-	Sht. 51	-	-	B	N	-	-	-	-	-	-	-	-	-	-	-	-	
E623	-	(Electric)	-	-	-	Sht. 51	-	-	B	N	-	-	-	-	-	-	-	-	-	-	-	-	
E624	-	(Electric)	-	-	-	Sht. 51	-	-	B	N	-	-	-	-	-	-	-	-	-	-	-	-	
E625	-	(Electric)	-	-	-	Sht. 51	-	-	B	N	-	-	-	-	-	-	-	-	-	-	-	-	
E627	-	(Electric)	-	-	-	Sht. 51	-	-	B	N	-	-	-	-	-	-	-	-	-	-	-	-	
E628	-	(Electric)	-	-	-	Sht. 51	-	-	B	N	-	-	-	-	-	-	-	-	-	-	-	-	
E629	-	(Electric)	-	-	-	Sht. 51	-	-	B	N	-	-	-	-	-	-	-	-	-	-	-	-	
E630	-	(Electric)	-	-	-	Sht. 51	-	-	B	N	-	-	-	-	-	-	-	-	-	-	-	-	

DCD_03.09.06-61

Table 6.2.4-3 List of Containment Penetrations and System Isolation Positions (Sheet 11 of 15)

Pen NO.	GDC	System Name	Fluid	Line Size (in.)	ESF or Support System	Valve Arragmt Figure 6.2.4-1	Valve Number	Location of Valve	Type Tests	Type C Test	Length of Pipe (Note 1)	Valve		Actuation Mode		Valve Position			Power Failure	Actuation Signal	Valve Closure (seconds)	Power Source	Remark
												Type	Operator	Primary	Secondary	Normal	Shutdown	Post-Accident					
E631	-	(Electric)	-	-	-	Sht. 51	-	-	B	N	-	-	-	-	-	-	-	-	-	-	-	-	
E632	-	(Electric)	-	-	-	Sht. 51	-	-	B	N	-	-	-	-	-	-	-	-	-	-	-	-	
E633	-	(Electric)	-	-	-	Sht. 51	-	-	B	N	-	-	-	-	-	-	-	-	-	-	-	-	
E634	-	(Electric)	-	-	-	Sht. 51	-	-	B	N	-	-	-	-	-	-	-	-	-	-	-	-	
E635	-	(Electric)	-	-	-	Sht. 51	-	-	B	N	-	-	-	-	-	-	-	-	-	-	-	-	
E636	-	(Electric)	-	-	-	Sht. 51	-	-	B	N	-	-	-	-	-	-	-	-	-	-	-	-	
E637	-	(Electric)	-	-	-	Sht. 51	-	-	B	N	-	-	-	-	-	-	-	-	-	-	-	-	
E638	-	(Electric)	-	-	-	Sht. 51	-	-	B	N	-	-	-	-	-	-	-	-	-	-	-	-	
E639	-	(Electric)	-	-	-	Sht. 51	-	-	B	N	-	-	-	-	-	-	-	-	-	-	-	-	
E650	-	(Electric)	-	-	-	Sht. 51	-	-	B	N	-	-	-	-	-	-	-	-	-	-	-	-	
E651	-	(Electric)	-	-	-	Sht. 51	-	-	B	N	-	-	-	-	-	-	-	-	-	-	-	-	
E652	-	(Electric)	-	-	-	Sht. 51	-	-	B	N	-	-	-	-	-	-	-	-	-	-	-	-	
E653	-	(Electric)	-	-	-	Sht. 51	-	-	B	N	-	-	-	-	-	-	-	-	-	-	-	-	
E654	-	(Electric)	-	-	-	Sht. 51	-	-	B	N	-	-	-	-	-	-	-	-	-	-	-	-	
E655	-	(Electric)	-	-	-	Sht. 51	-	-	B	N	-	-	-	-	-	-	-	-	-	-	-	-	
E656	-	(Electric)	-	-	-	Sht. 51	-	-	B	N	-	-	-	-	-	-	-	-	-	-	-	-	
E657	-	(Electric)	-	-	-	Sht. 51	-	-	B	N	-	-	-	-	-	-	-	-	-	-	-	-	
E658	-	(Electric)	-	-	-	Sht. 51	-	-	B	N	-	-	-	-	-	-	-	-	-	-	-	-	
E661	-	(Electric)	-	-	-	Sht. 51	-	-	B	N	-	-	-	-	-	-	-	-	-	-	-	-	
E662	-	(Electric)	-	-	-	Sht. 51	-	-	B	N	-	-	-	-	-	-	-	-	-	-	-	-	
E663	-	(Electric)	-	-	-	Sht. 51	-	-	B	N	-	-	-	-	-	-	-	-	-	-	-	-	
E664	-	(Electric)	-	-	-	Sht. 51	-	-	B	N	-	-	-	-	-	-	-	-	-	-	-	-	
E665	-	(Electric)	-	-	-	Sht. 51	-	-	B	N	-	-	-	-	-	-	-	-	-	-	-	-	
E666	-	(Electric)	-	-	-	Sht. 51	-	-	B	N	-	-	-	-	-	-	-	-	-	-	-	-	
E667	-	(Electric)	-	-	-	Sht. 51	-	-	B	N	-	-	-	-	-	-	-	-	-	-	-	-	
E668	-	(Electric)	-	-	-	Sht. 51	-	-	B	N	-	-	-	-	-	-	-	-	-	-	-	-	
E701	-	(Electric)	-	-	-	Sht. 51	-	-	B	N	-	-	-	-	-	-	-	-	-	-	-	-	
E702	-	(Electric)	-	-	-	Sht. 51	-	-	B	N	-	-	-	-	-	-	-	-	-	-	-	-	
E703	-	(Electric)	-	-	-	Sht. 51	-	-	B	N	-	-	-	-	-	-	-	-	-	-	-	-	

DCD_03.09.06-61

Table 6.2.4-3 List of Containment Penetrations and System Isolation Positions (Sheet 12 of 15)

Pen NO.	GDC	System Name	Fluid	Line Size (in.)	ESF or Support System	Valve Arragmt Figure 6.2.4-1	Valve Number	Location of Valve	Type Tests	Type C Test	Length of Pipe (Note 1)	Valve		Actuation Mode		Valve Position			Power Failure	Actuation Signal	Valve Closure (seconds)	Power Source	Remark
												Type	Operator	Primary	Secondary	Normal	Shutdown	Post-Accident					
E704	-	(Electric)	-	-	-	Sht. 51	-	-	B	N	-	-	-	-	-	-	-	-	-	-	-	-	
E709	-	(Electric)	-	-	-	Sht. 51	-	-	B	N	-	-	-	-	-	-	-	-	-	-	-	-	
E710	-	(Electric)	-	-	-	Sht. 51	-	-	B	N	-	-	-	-	-	-	-	-	-	-	-	-	
E711	-	(Electric)	-	-	-	Sht. 51	-	-	B	N	-	-	-	-	-	-	-	-	-	-	-	-	
E712	-	(Electric)	-	-	-	Sht. 51	-	-	B	N	-	-	-	-	-	-	-	-	-	-	-	-	

DCD_03.09.06-61

Table 6.2.4-3 List of Containment Penetrations and System Isolation Positions (Sheet 13 of 15)

Note 1 - The value is the length of pipe from containment to outermost isolation valve (or the maximum length that is not be exceeded in further design)

Note 2 - Inside and Outside valves are different Class-1E power source trains

Note 3 - The following is a list of abbreviations:

GDC	General Design Criteria
RG	Regulatory Guides
Dia	diaphram
B-fly	butterfly
O	open
C	close
LC	Locked closed
FC	Fail Closed
RM	Remote Manual
S/M	System Medium
T	Containment Vessel Isolation Signal (Same as Containment Isolation Phase A)
P	Containment Vessel Isolation Signal (Same as Containment Isolation Phase B)
S	Safety Injection Signal
V	Containment Purge Isolation Signal
FAI	Fail as is
RCPS	Reactor Control and Protection System signal
Self	actuated by the fluid pressure
NA	not applicable
LTS	Leak rate testing system
RLS	RCP motor oil collection system

Note 4 - The justification for not Type C testing the safety injection lines, residual heat removal lines, containment spray lines, safety injection pump suction lines, and CS/RHR pump suction lines is that these systems are closed systems outside containment designed and constructed to ASME III, Class 2 and Seismic Category I requirements, and as such they do not constitute a potential containment atmosphere leak path during or following a loss-of-coolant accident with a single active failure of a system component. Should the valves, including test connection valves or relief valves, leak slightly when closed, the fluid seal within the pipe or the closed piping system outside containment would preclude release of containment atmosphere to the environs. These penetrations will be tested periodically as part of the Containment Integrated leak Rate Test. Furthermore, inservice testing and inspection of these isolation valves and the associated piping system outside the containment is performed periodically under the inservice inspection requirements of ASME XI as described in subsection 3.9.6 and section 6.6. During normal operation, the systems are water filled, and degradation of valves or piping is readily detected. Therefore, in accordance with ANS 56.8-1994, Section 3.3.1, these valves are not required to be Type C tested. (Ref. 6.2-35)

Note 5 - The justification for not Type C testing the component cooling water lines to and from the excess letdown heat exchanger and letdown heat exchanger, and the steam generator and associated secondary system piping is that these systems are closed systems inside containment designed and constructed to ASME III, Class 2 and Seismic Category I requirements and as such they do not constitute a potential containment atmosphere leak path during or following a loss-of-coolant accident with a single active failure of a system component. Should the valves leak slightly when closed, the fluid seal within the pipe or the closed piping system inside containment would preclude release of containment atmosphere to the environs. These penetrations will be tested periodically as part of the Containment Integrated leak Rate Test. Furthermore, inservice testing and inspection of these isolation valves and the associated piping system inside the containment is performed periodically under the inservice inspection requirements of ASME XI as described in subsection 3.9.6 and section 6.6. During normal operation, the systems are water filled, and degradation of valves or piping is readily detected. Therefore, in accordance with ANS 56.8-1994, Section 3.3.1, these valves are not required to be Type C tested. (Ref. 6.2-35)

Table 6.2.4-3 List of Containment Penetrations and System Isolation Positions (Sheet 14 of 15)

Note 6 - The lines from the RCS hot leg to the CS/RHR pump suctions each contain two remote manual (motor operated) valves, which are closed during normal plant power operation. The valves are interlocked such that they cannot be opened when the RCS pressure is greater than the design pressure of the RHR system. The valve which is located closer to the RCS inside the missile barrier is not considered a containment isolation valve. The second valve defines the limit of the reactor coolant pressure boundary. This valve also provides the containment isolation barrier inside containment and is considered to be sealed closed.
Since these lines connect to the Containment Spray recirculation loops which are filled with sump water and at least two of which is in operation post accident, there is no need for any containment isolation valves in these lines outside containment. If a leak occurs in the line upstream (toward the RCS) of the valve inside containment, the closed valve isolates the line. If a leak occurs in the recirculation system outside containment, the sump valve is closed to prevent loss of sump water and the closed valve in the RHR suction line prevents any containment atmosphere from entering the system- outside containment. If a leak should occur in the short length of pipe between the valve inside containment and the containment, any containment atmosphere will get only as far as the fluid-filled system. Since this system is filled with sump water and is most likely in operation, no gas could escape to the outside. The fluid in the RHR suction line would drop to approximately the level of fluid in the sump and any containment atmosphere which did leak into the line would be contained in this length of closed piping.
Another closed valve in .the line would do nothing except somewhat decrease the length of pipe outside containment which could possibly be exposed to containment atmosphere following a leak. It is possible that a valve in this section of pipe would increase the probability of leakage of gas through the stem packing and could not be considered as tight as a clean length of pipe. No single failure of any active or passive component anywhere in the present system can cause any release of containment atmosphere to the outside. Any additional valves would complete normal residual heat removal operation and are unnecessary for containment isolation.
This arrangement is intended to provide guidance in satisfying Criterion 55 on the other defined basis in that system reliability is enhanced by a single valve and there is at least a single mechanical barrier after a single failure.
Inservice testing and inspection of these isolation valves and the associated piping system outside the containment is performed periodically under the inservice inspection requirements of ASME XI as described-in subsection 3.9.6 and section 6.6. During normal operation, the systems are water filled, and degradation of valves or piping is readily detected.

Note 7 - The lines from refueling water storage pit (RWSP) to the suctions of the safety injection (SI) pumps and containment spray /residual heat removal (CS/RHR) pumps are each provided with a single remote manual gate valve. The lines from the RWSP are always submerged (during normal operation and postulated accidents) such that no contianment atmosphere can impinge upon the valves. The systems which the RWSP lines connect to outside containment are closed systems meeting the appropriate requirments of closed systems in the standard (N271-1976), including 3.6.4 and 3.6.7. The valve does ~~not~~ provide a barrier outside containment to prevent loss of sump water should a leak develop in a recirculation loop. (The valve is to be closed remotely from the control room to accomplish this. Leak detection is provided for each line, so that the operator can determine which valve is to be closed.) Should a leak develop outside containment, the fluid will be contained by the controlled leakage safeguard component area. These lines and valves are designed to preclude a breach of piping integrity, which is described in DCD Subsection 3.6.2. Therefore, guard pipe are not provided in these lines. (Reference: SRP 6.2.4 Rev.3 SRP Acceptance Criteria 5) This arrangement is intended to provide guidance in satisfying Criterion 56 on the other defined basis in that system reliability is enhanced by a single valve and a single barrier is still maintained after accommodating a single active failure. Inservice testing and inspection of these isolation valves and the associated piping system outside the containment is performed periodically under the inservice inspection requirements of ASME XI as described in subsection 3.9.6 and section 6.6. During normal operation, the systems are water filled, and degradation of valves or piping is readily detected.

DCD_06.02.04-55

DCD_06.02.04-55

Table 6.2.4-3 List of Containment Penetrations and System Isolation Positions (Sheet 15 of 15)

Note 8 - These lines sense the pressure of containment atmosphere on the inside and are connected to pressure transmitters on the outside. Each of channels has a separate penetration and each pressure transmitter is located immediately adjacent to the outside of the containment wall. It is connected to a sealed bellows located immediately adjacent to the inside containment wall by means of a sealed fluid filled tube. This tubing along with the transmitter and bellows is conservatively designed and subject to strict quality control and to regular in-service inspections to assure its integrity. This arrangement provides a double barrier (one inside and one outside) between the containment and the outside containment. Should a leak occur outside containment, the sealed bellows inside containment, which is designed to withstand full containment design pressure, will prevent the escape of containment atmosphere. Should a leak occur inside containment the diaphragm in the transmitter, which is designed to withstand full containment design pressure, will prevent any escape of containment atmosphere. This arrangement provides automatic double barrier isolation without operator action and without sacrificing any reliability with regard to its safeguards functions. Both the bellows and the tubing inside containment and the transmitter and tubing outside containment are enclosed by protective shielding. The shielding (box, channel, etc.) prevents mechanical damage to the components from missiles, water jets, dropping tools, etc. Because of this sealed fluid filled system, a postulated severance of the line during either normal operation or accident conditions will not result in any release from the containment. If the fluid in the tubing is heated during the accident, the flexible bellows will allow expansion of the fluid without overpressurizing the system and without significant detriment to the accuracy of the transmitter. This arrangement is intended to provide guidance in satisfying Criterion 56 on the other defined basis in that it meets NRC Regulatory Guide 1.11 and consists of a missile protected closed system inside and outside containment. Therefore, in accordance with ANS 56.8-1994, Section 3.3.1, these valves are not required to be Type C tested. (Ref. 6.2-35)

Note 9 - Seat leakage for the isolation valves on these penetrations are potential leakage paths which may result in bypass of the annulus emergency exhaust system. See Subsection 6.2.3 for details. DCD_06.02.06-34

Table 6.2.5-1 Containment Hydrogen Monitoring and Control Design Parameters

Parameter	Value
I. Hydrogen Detector	
Number	1
Range (% hydrogen)	0-10
Accuracy	Less than or equal to ± 10% of full span
II. Hydrogen Igniter	
Number	20
Type	Glow Plug
Surface Temperature (°F)	Exceeds 1500

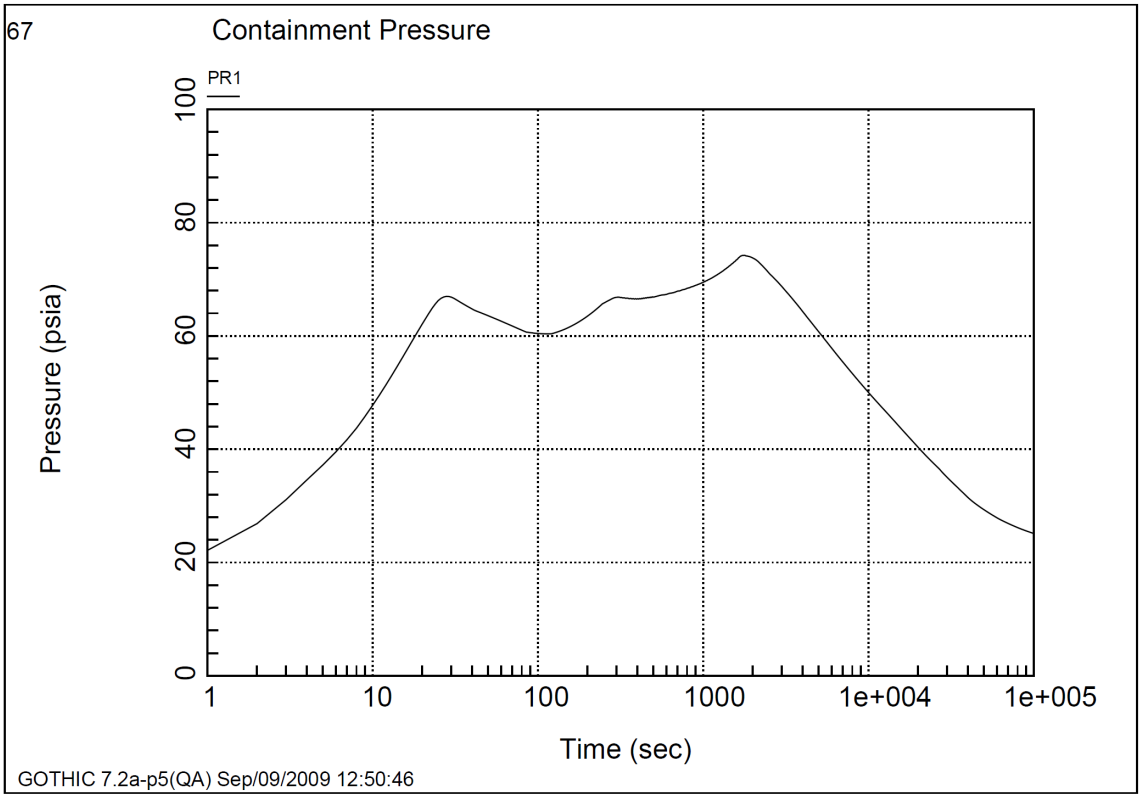

Figure 6.2.1-1 Calculated Internal Containment Pressure vs. Time for the Most Severe RCS Postulated Piping Failure

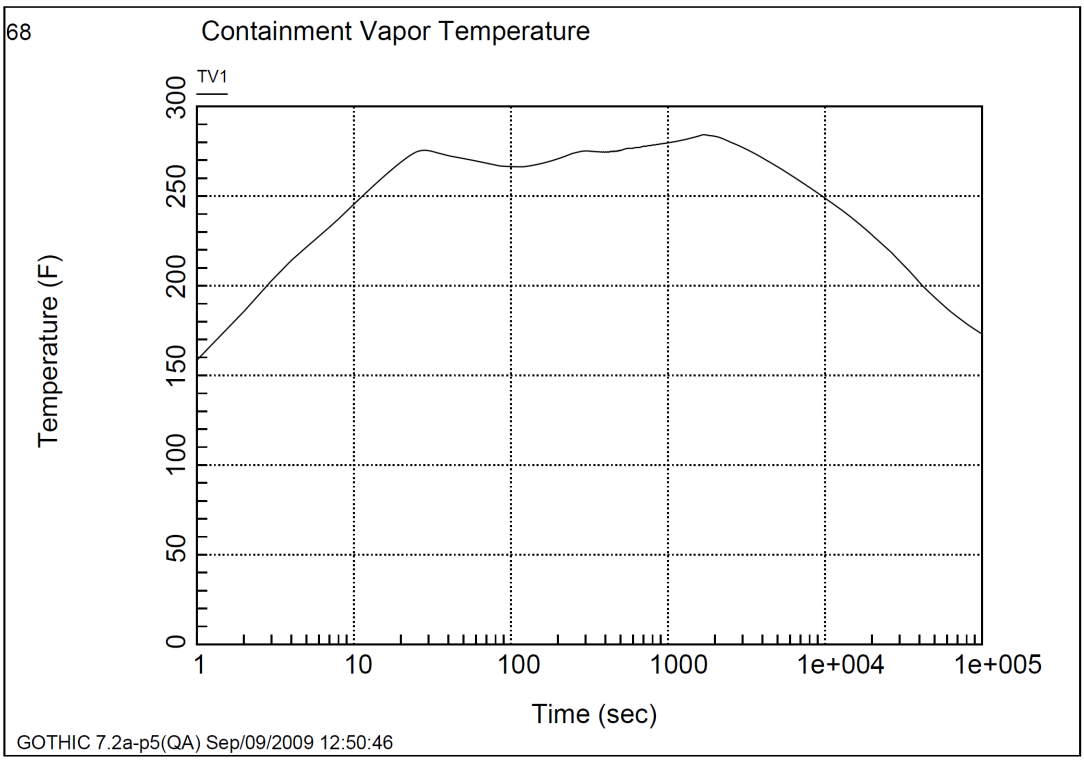

Figure 6.2.1-2 Calculated Internal Containment Temperature vs. Time for the Most Severe RCS Postulated Piping Failure

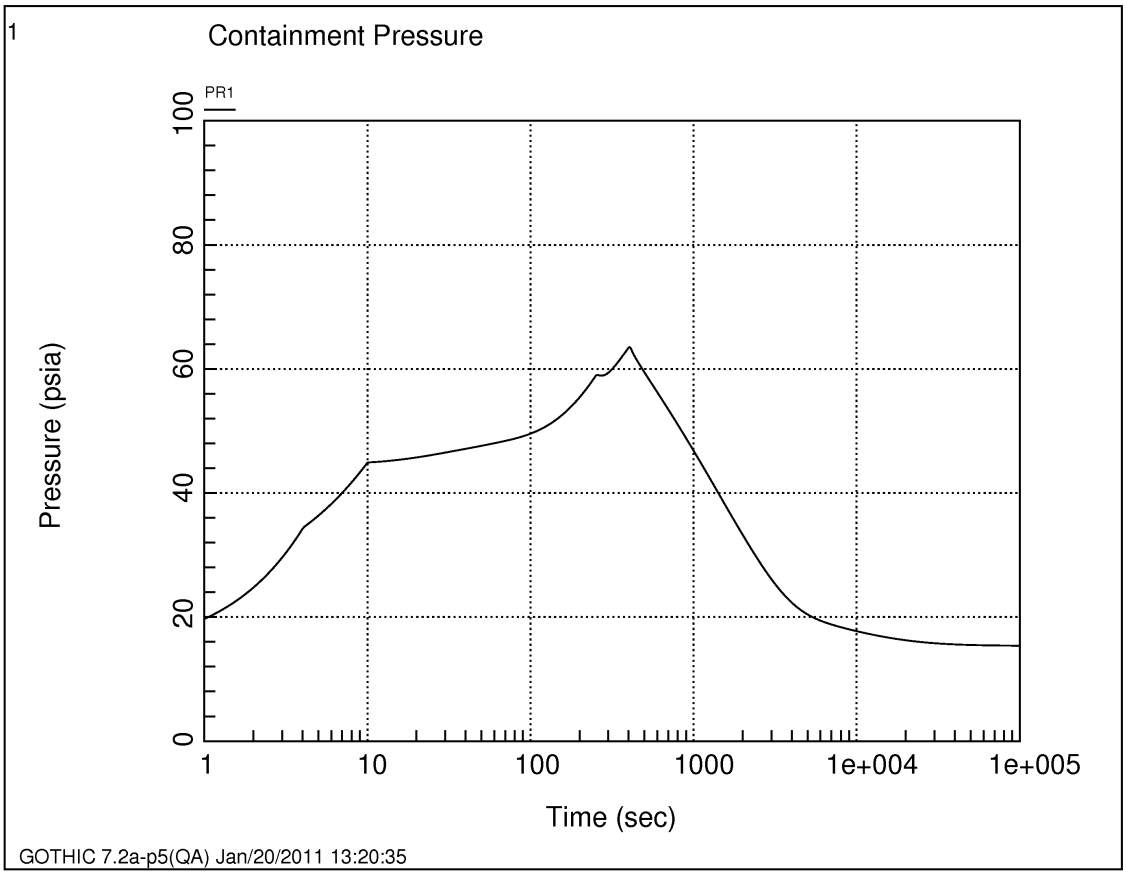

Figure 6.2.1-3 Calculated Internal Containment Pressure vs. Time for the Most Severe Secondary Steam System Postulated Piping Failure

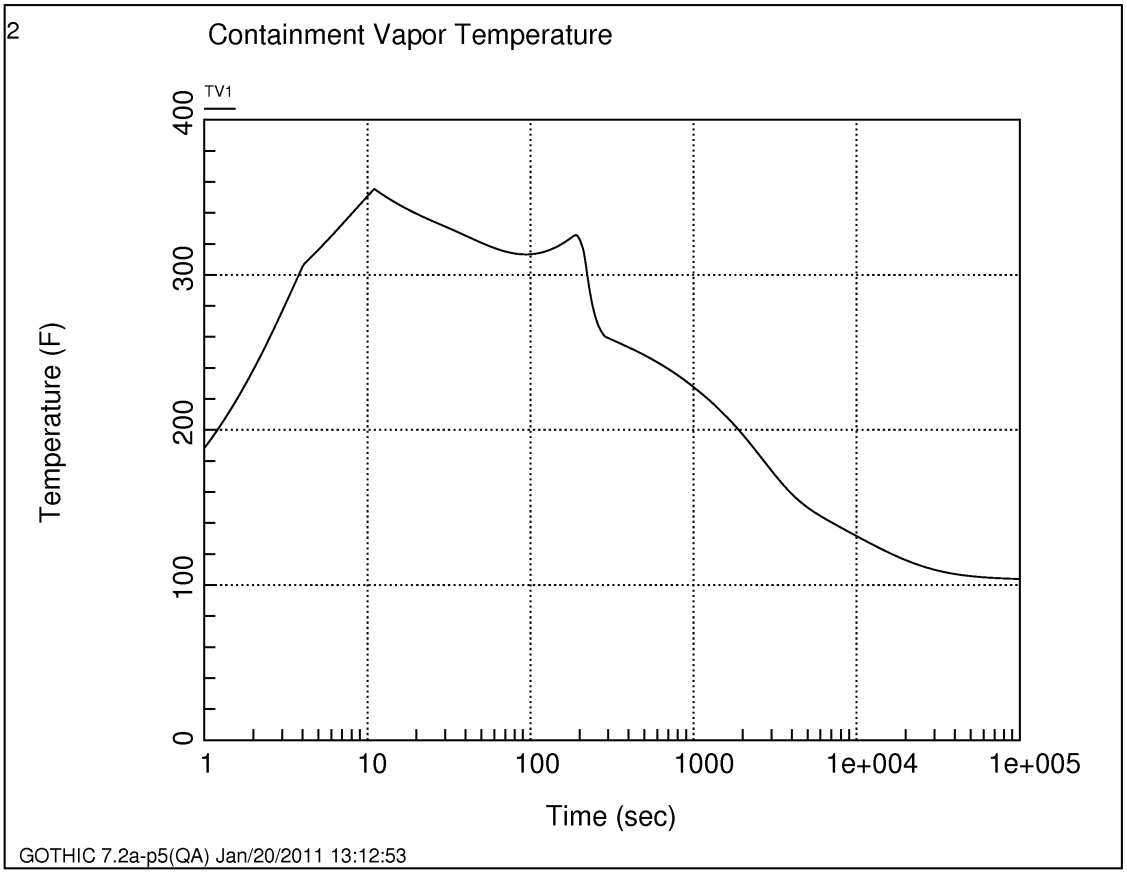

Figure 6.2.1-4 Calculated Internal Containment Temperature vs. Time for the Most Severe Secondary Steam System Postulated Piping Failure

Security-Related Information – Withheld Under 10 CFR 2.390

Figure 6.2.1-5 Containment Sectional View

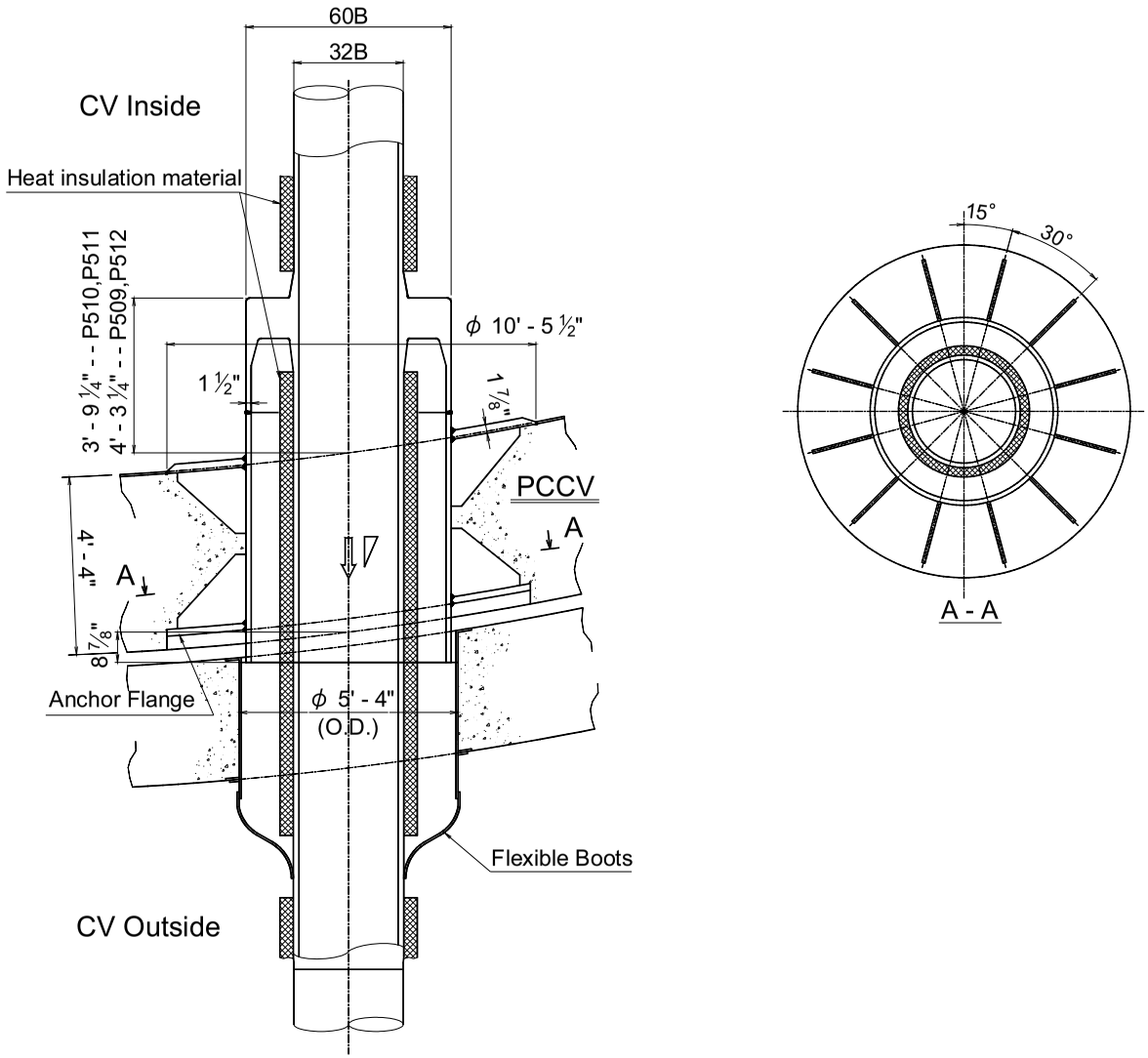

Figure 6.2.1-6 Main Steam Line Penetrations

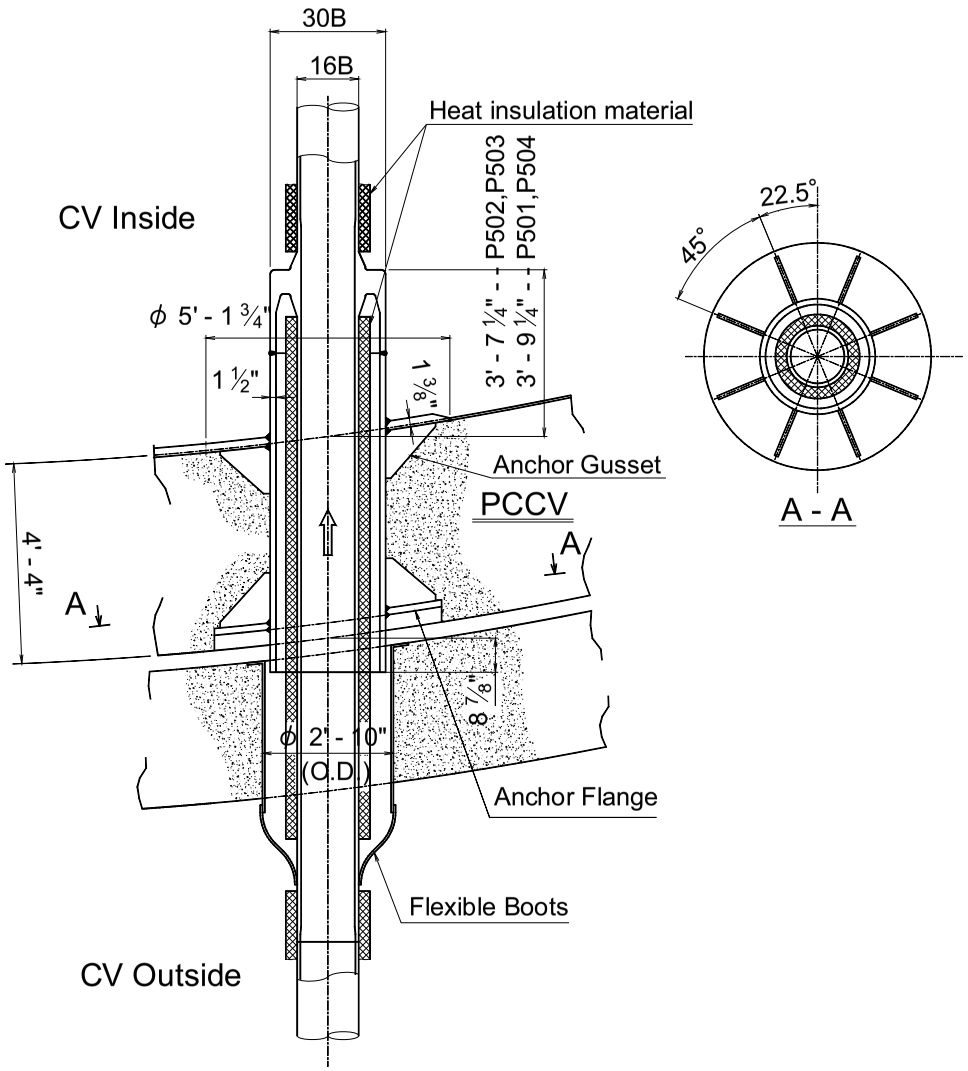

Figure 6.2.1-7 Feedwater Line Penetrations

MIC-03-06-00071

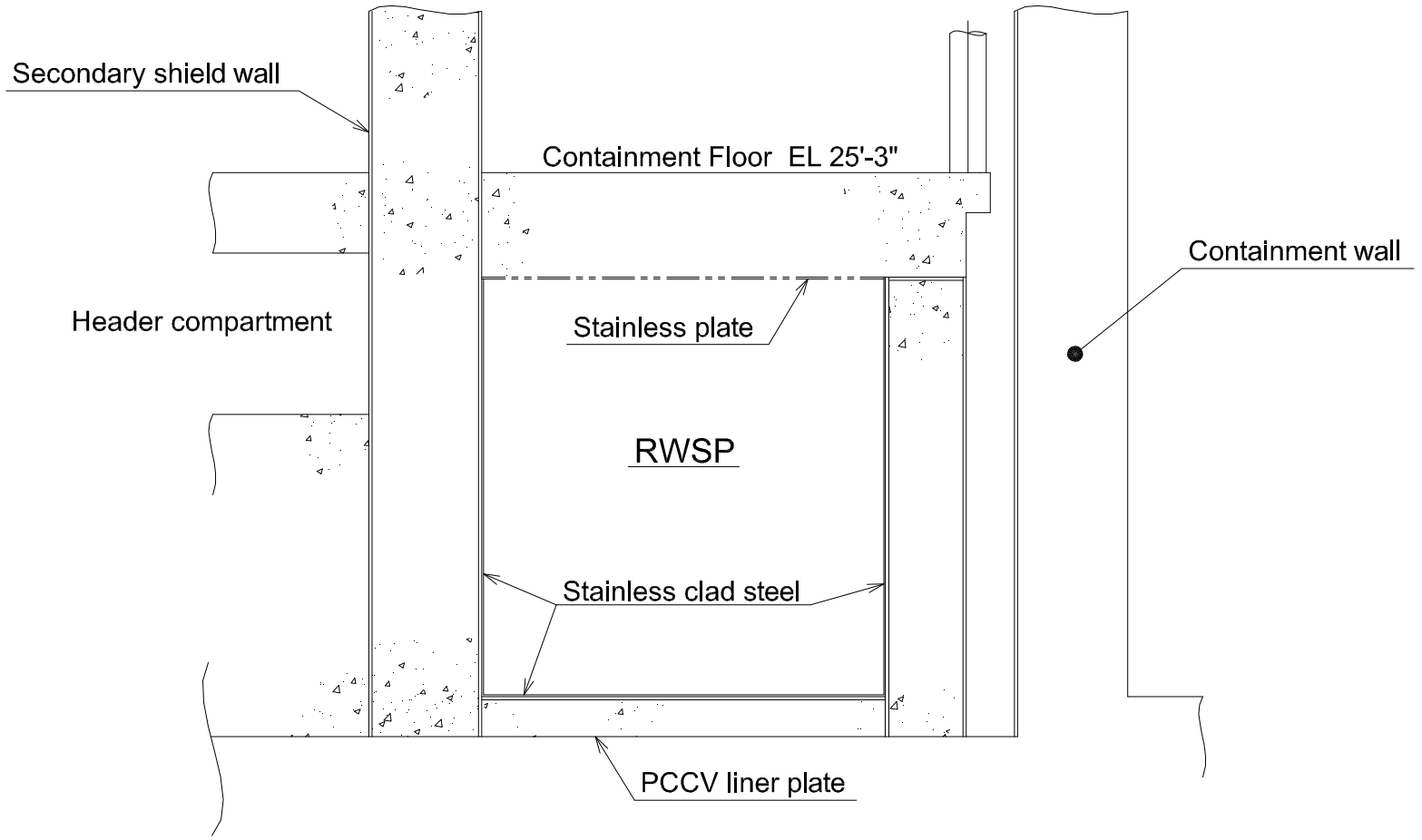

Figure 6.2.1-8 RWSP Concrete Structure Partial Sectional View

MIC-03-06-00070

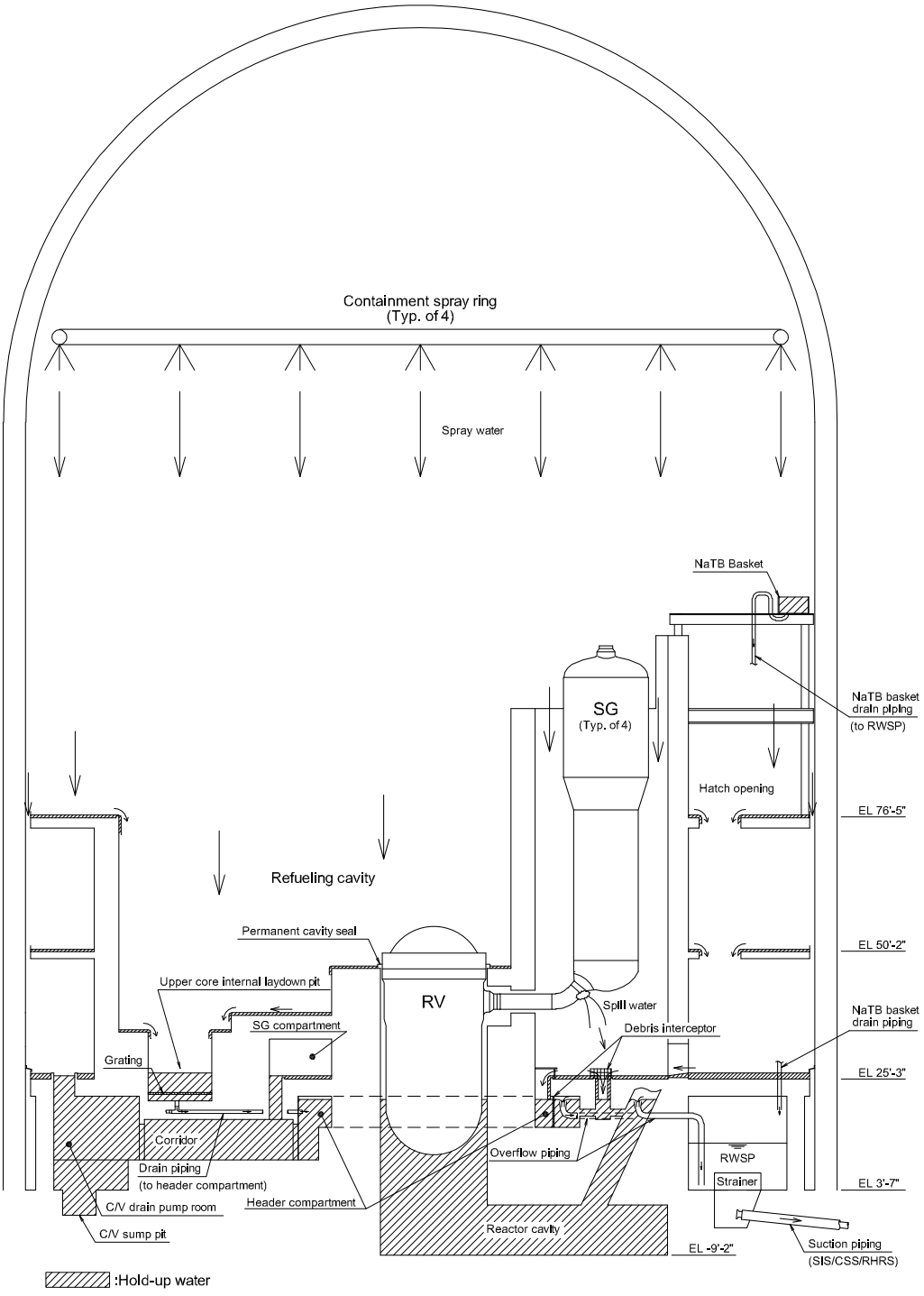

Figure 6.2.1-9 ~~Outline of Paths that Solutions from the ECCS and CSS would follow in the Containment to the RWSP~~ Outline of Post-LOCA Recirculation Pathways

MIC-03-06-00070

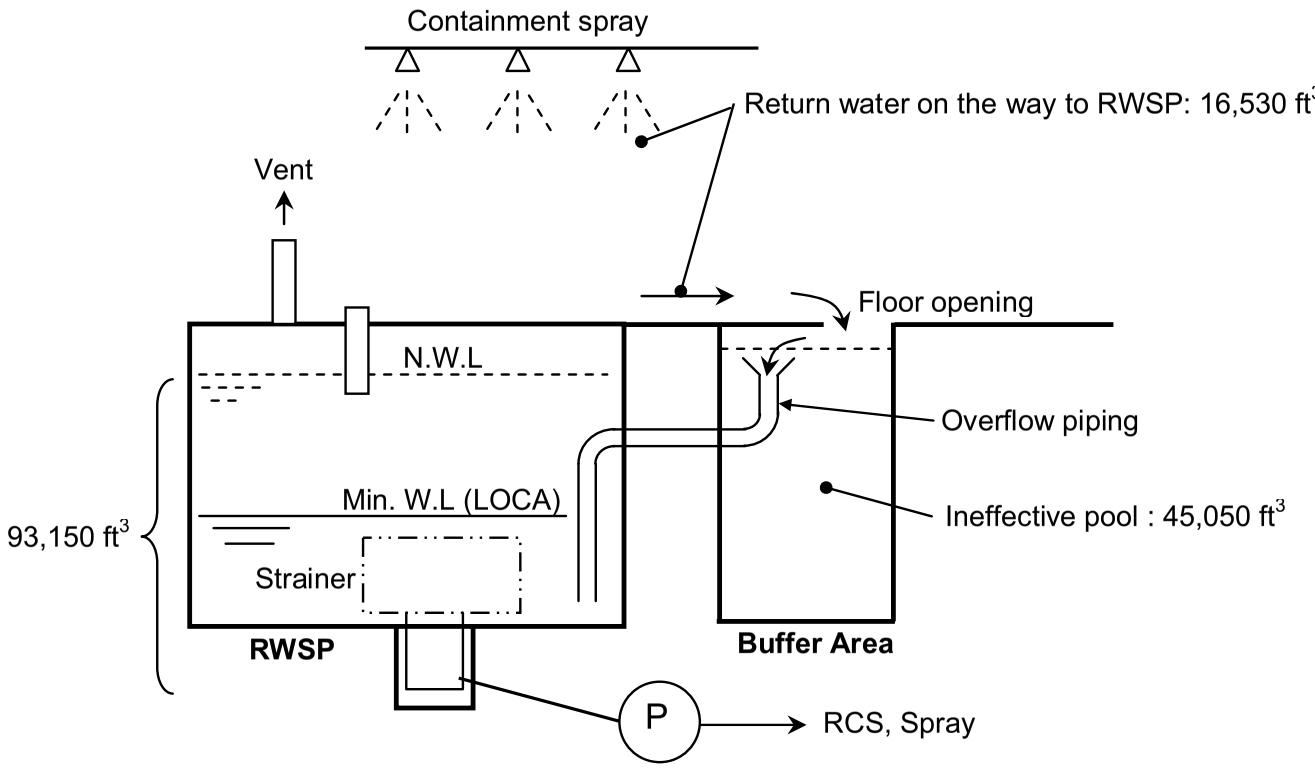

Figure 6.2.1-10 Volume of Ineffective Water

MIC-03-06-00070

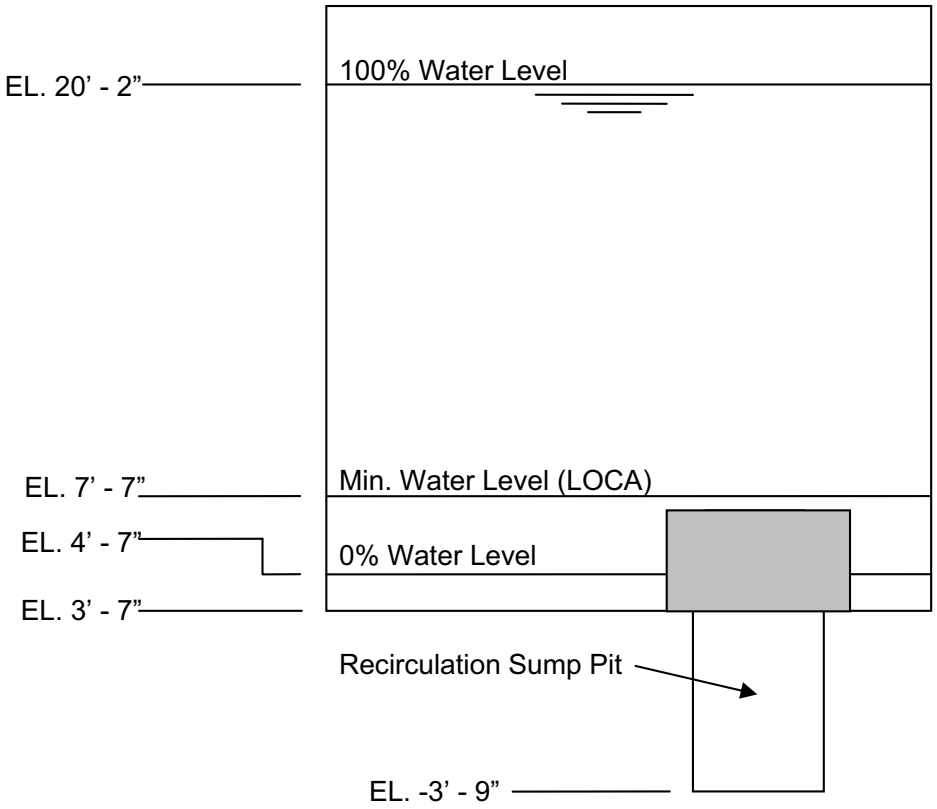

Figure 6.2.1-11 RWSP Water Levels

MIC-03-06-00070

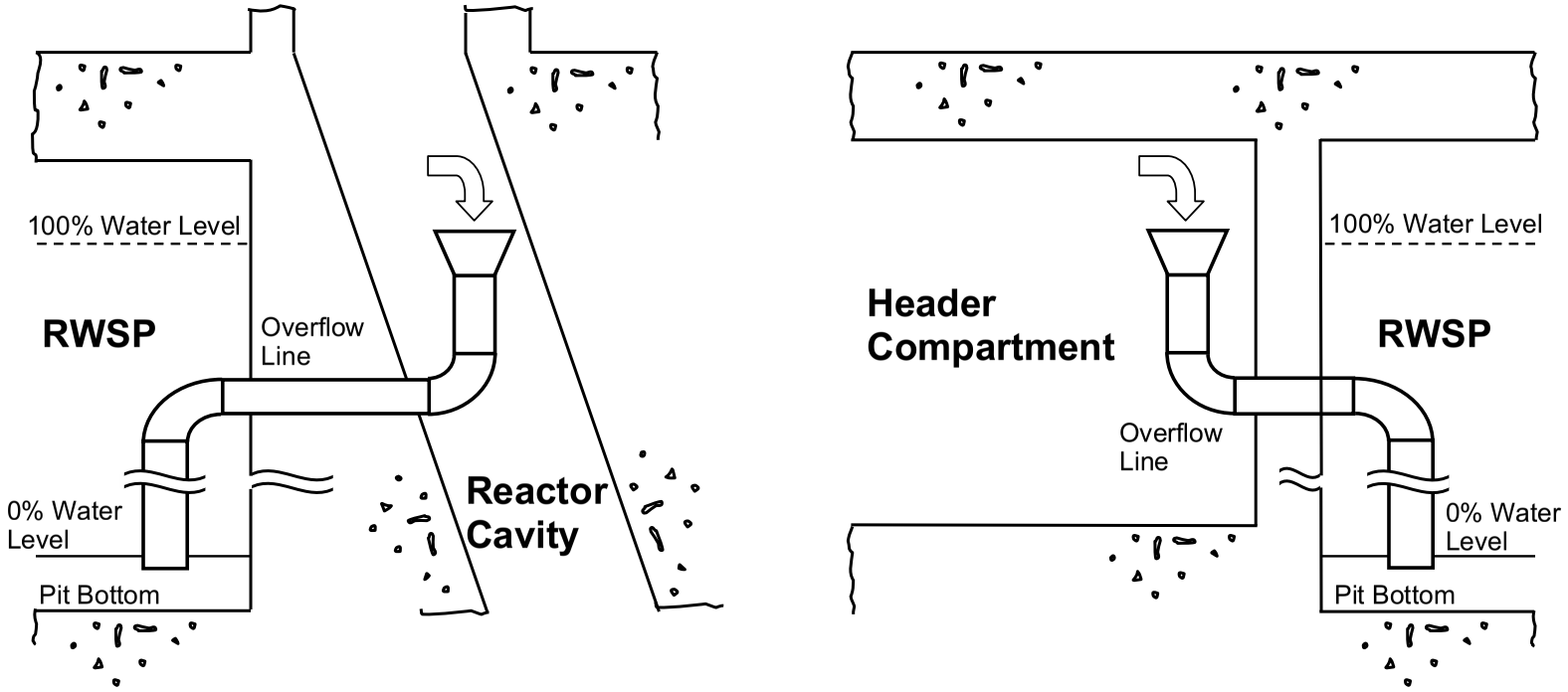

Figure 6.2.1-12 Transfer Piping

MIC-03-06-00070

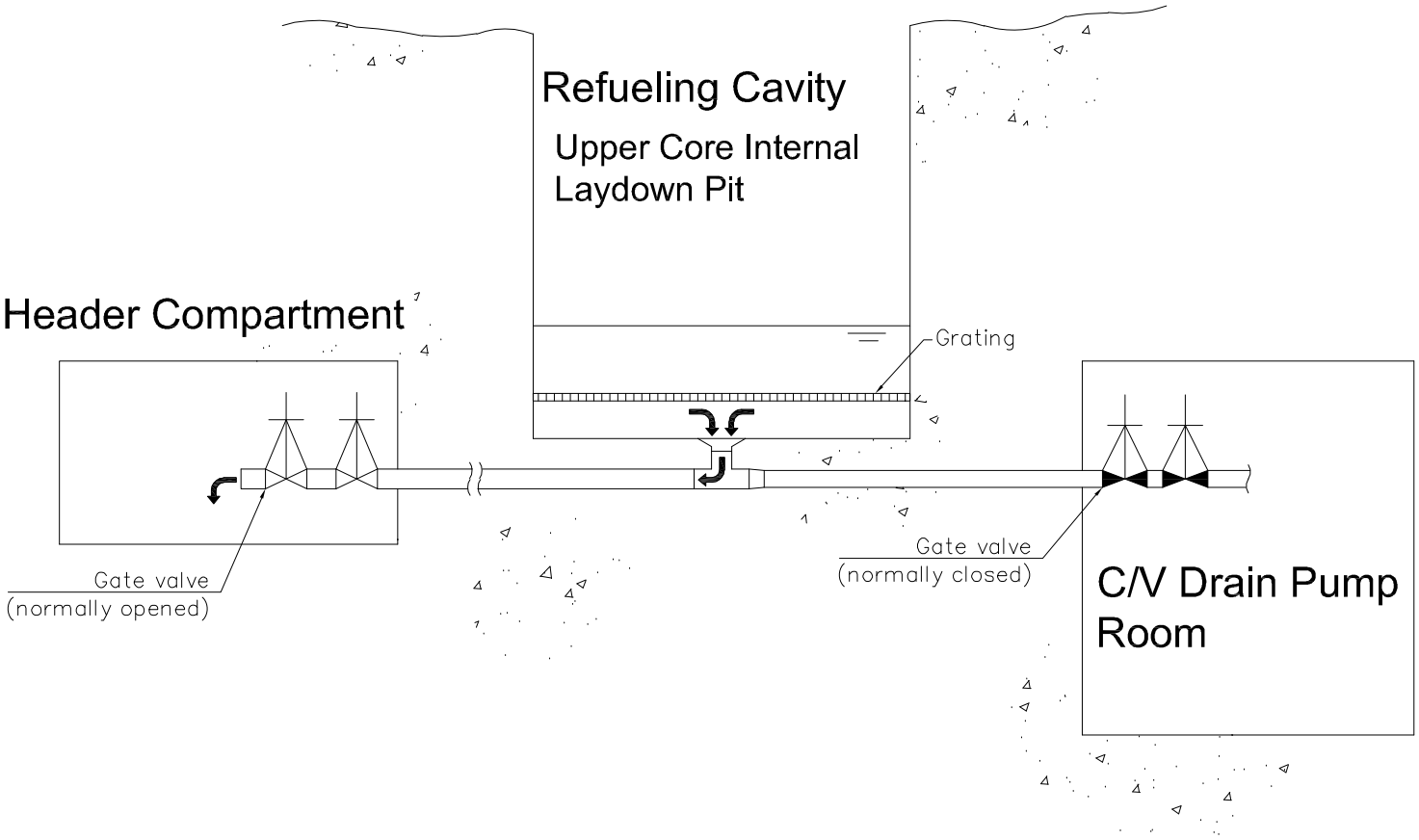

Figure 6.2.1-13 Refueling Cavity Drain Line

MIC-03-06-00070

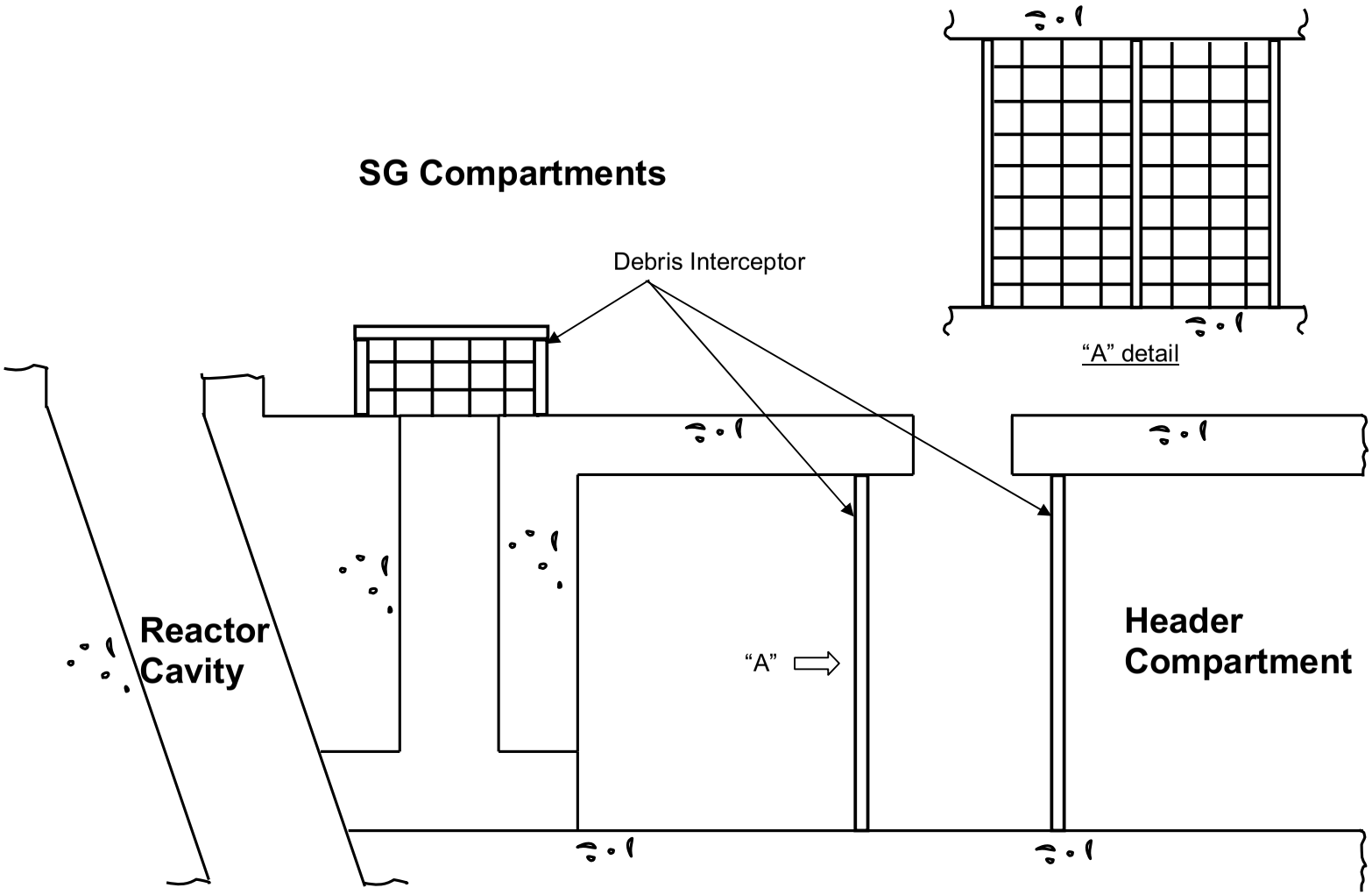

Figure 6.2.1-14 ~~Communicating Piping of HVAC Pressure Equalization Chamber~~Debris Interceptor

MIC-03-06-00070

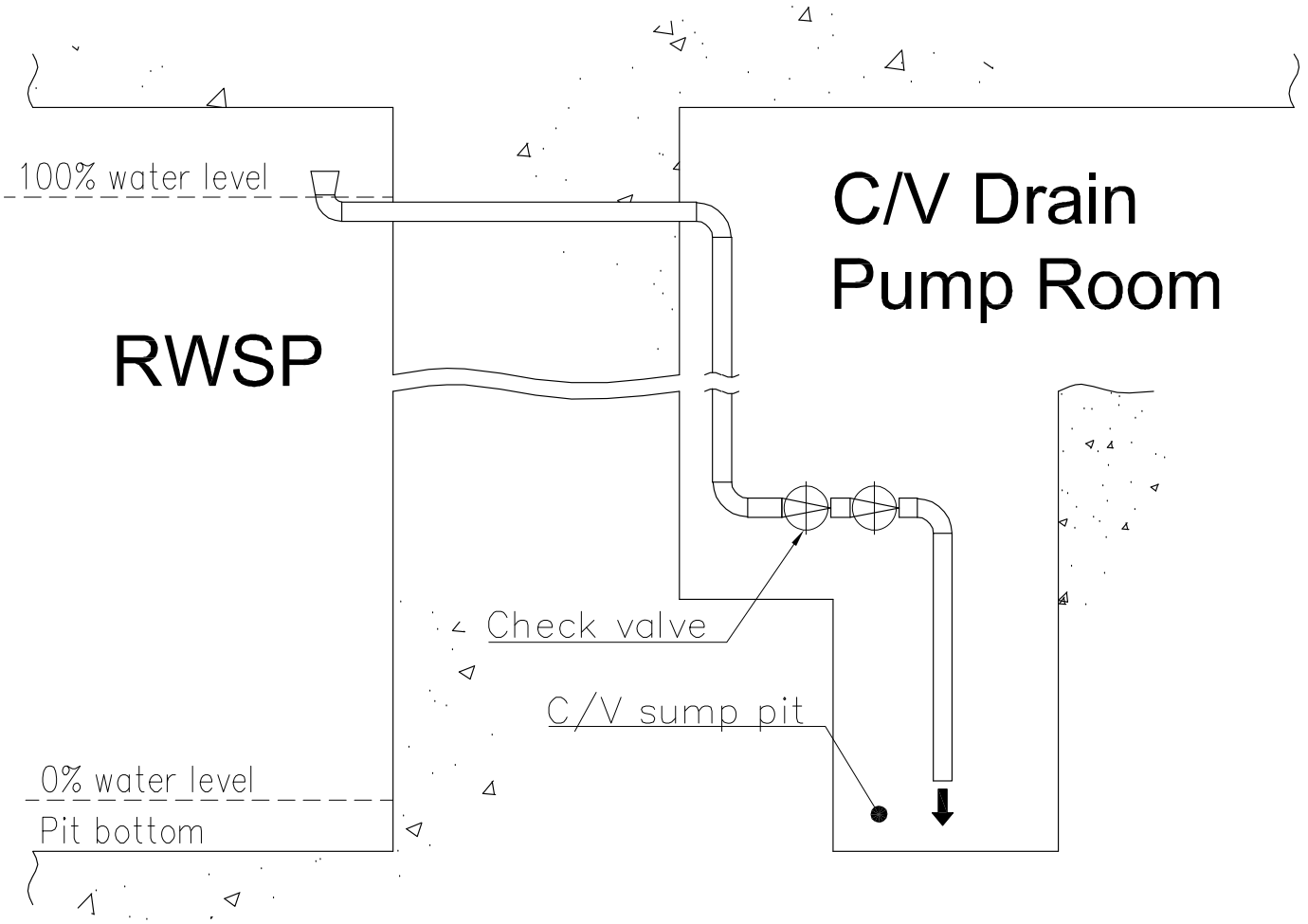

Figure 6.2.1-15 RWSP Overflow Piping

MIC-03-06-00070

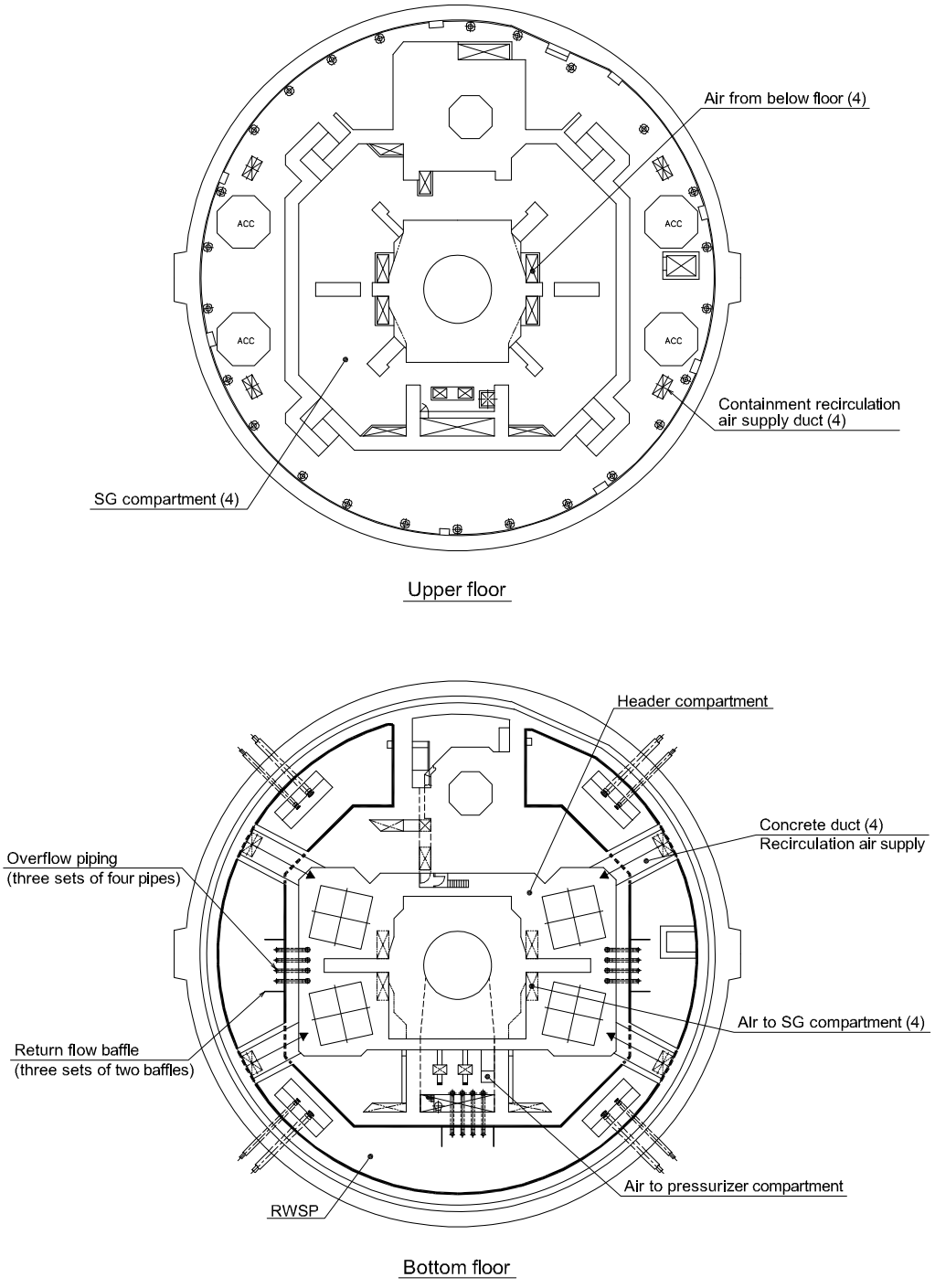

Figure 6.2.1-16 RWSP Upper and Lower Plan View at Elevation 25 ft.- 3 in.

MIC-03-06-00071

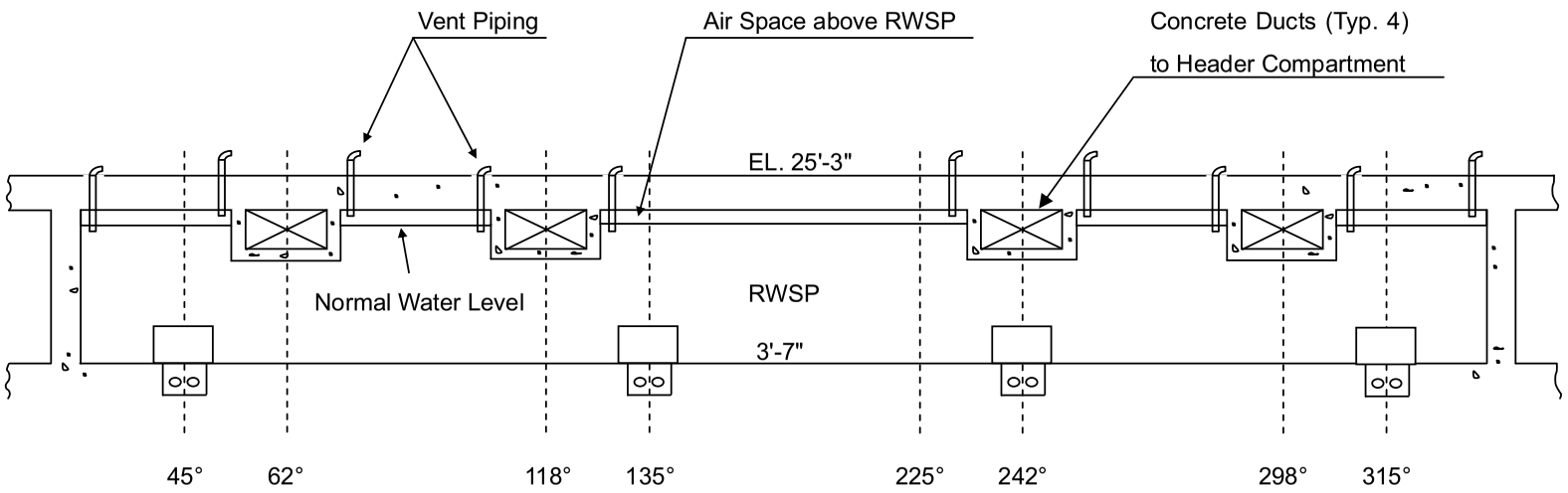

Figure 6.2.1-17 RWSP Panoramic Sectional View

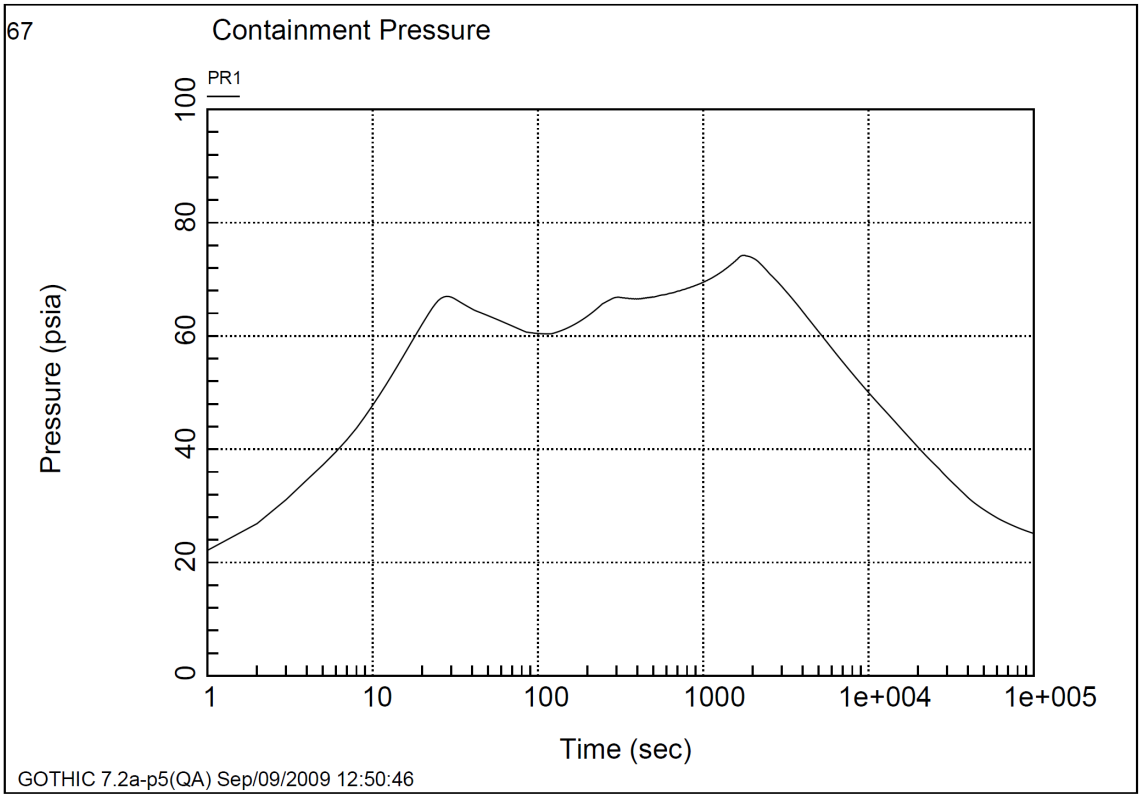

Figure 6.2.1-18 Containment Pressure vs. Time for DEPSG Break (C_D=1.0)

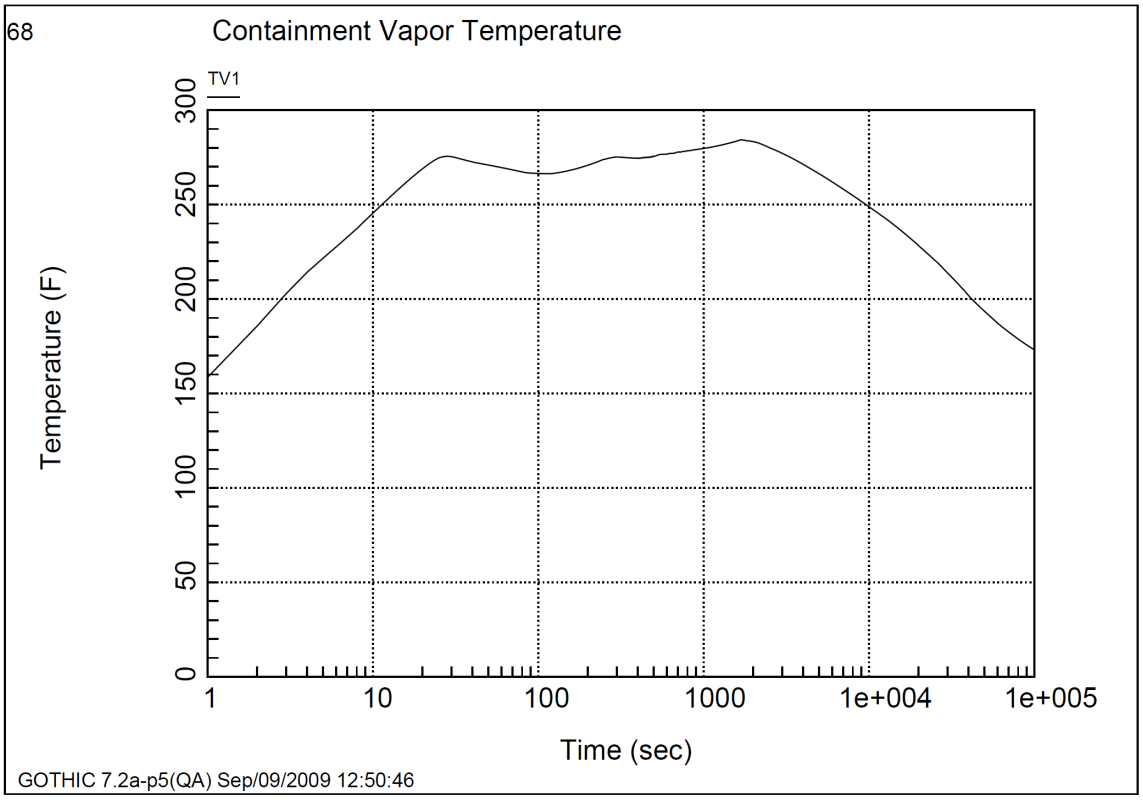

Figure 6.2.1-19 Containment Atmospheric Temperature vs. Time for DEPSG Break (C_D=1.0)

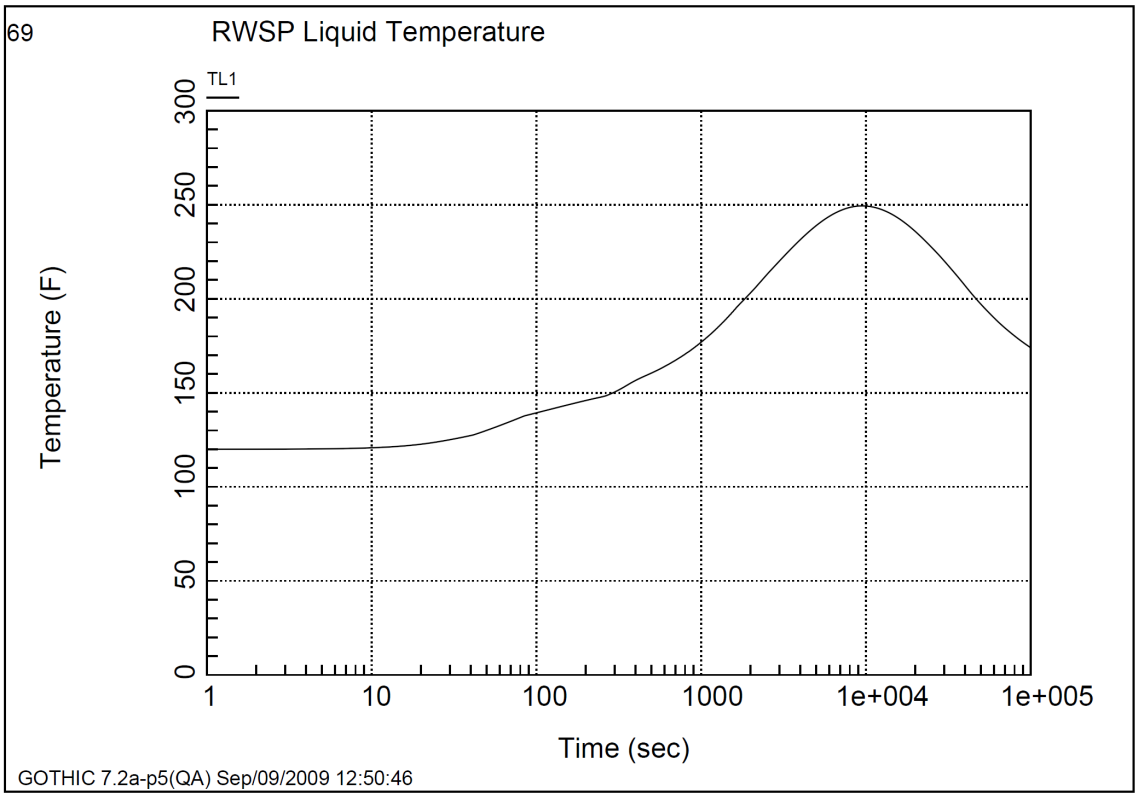

Figure 6.2.1-20 RWSP Water Temperature vs. Time for DEPSG Break (C_D=1.0)

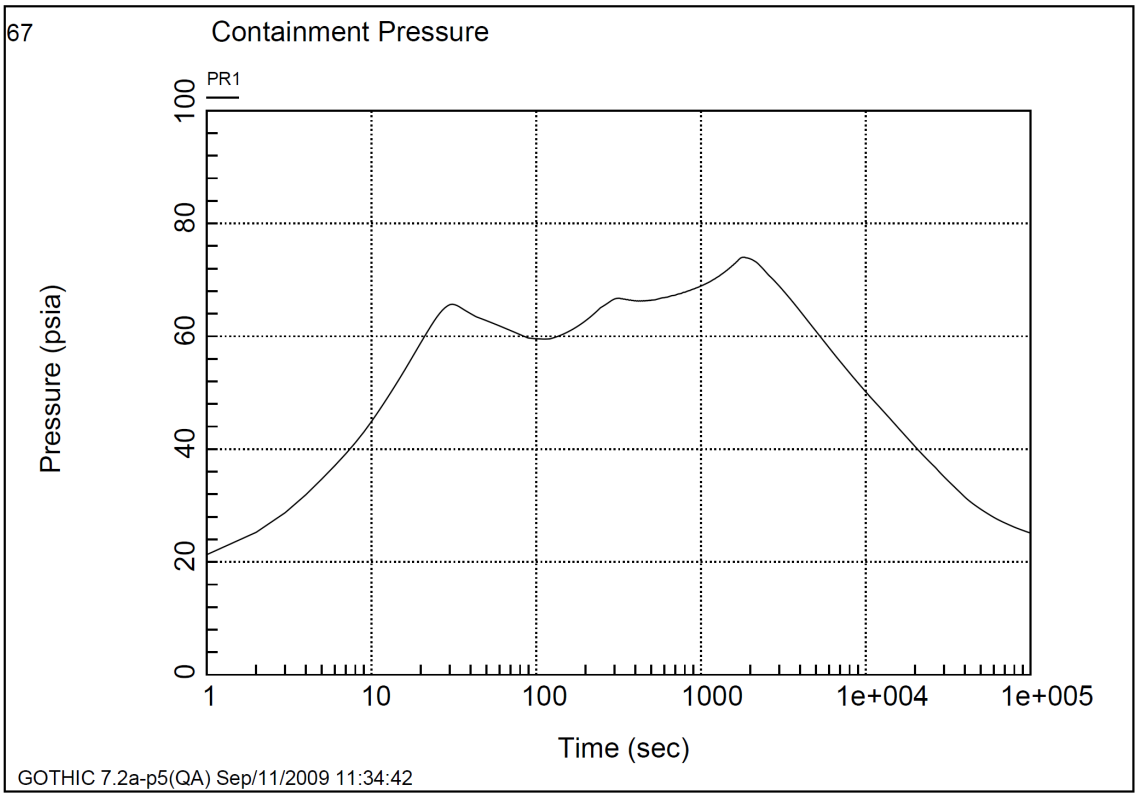

Figure 6.2.1-21 Containment Pressure vs. Time for DEPSG Break (C_D=0.6)

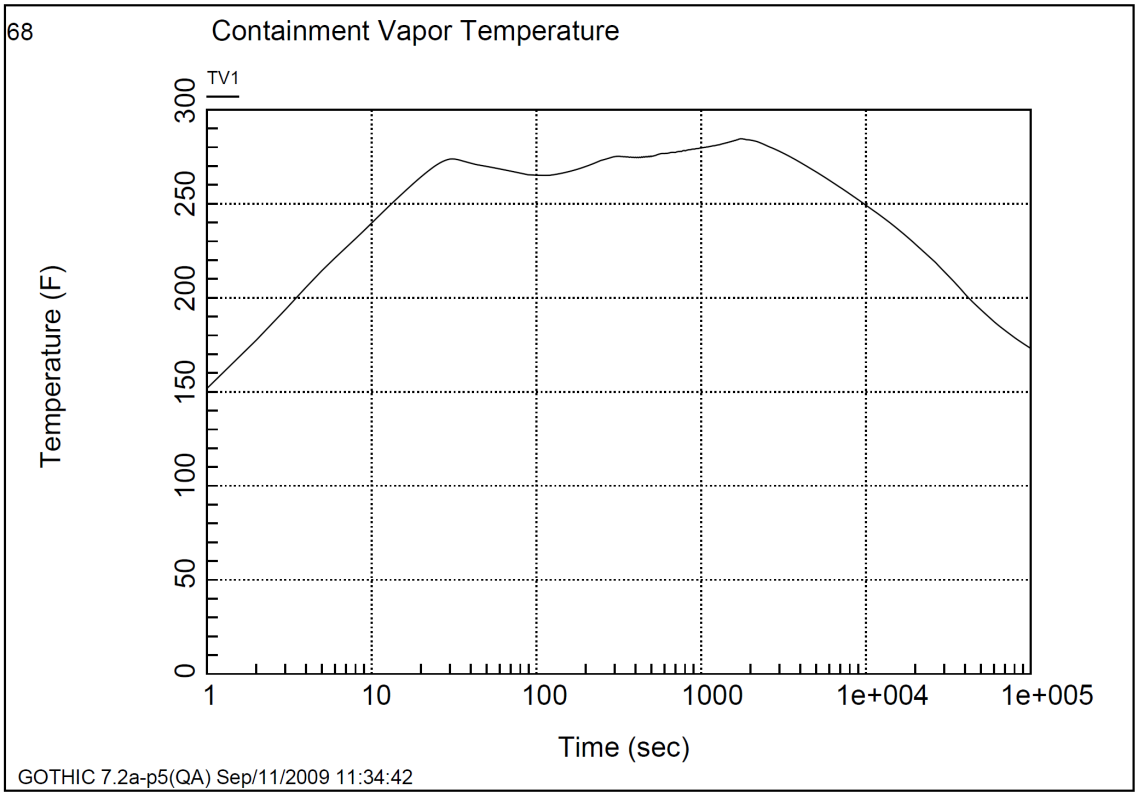

Figure 6.2.1-22 Containment Atmospheric Temperature vs. Time for DEPSG Break (C_D=0.6)

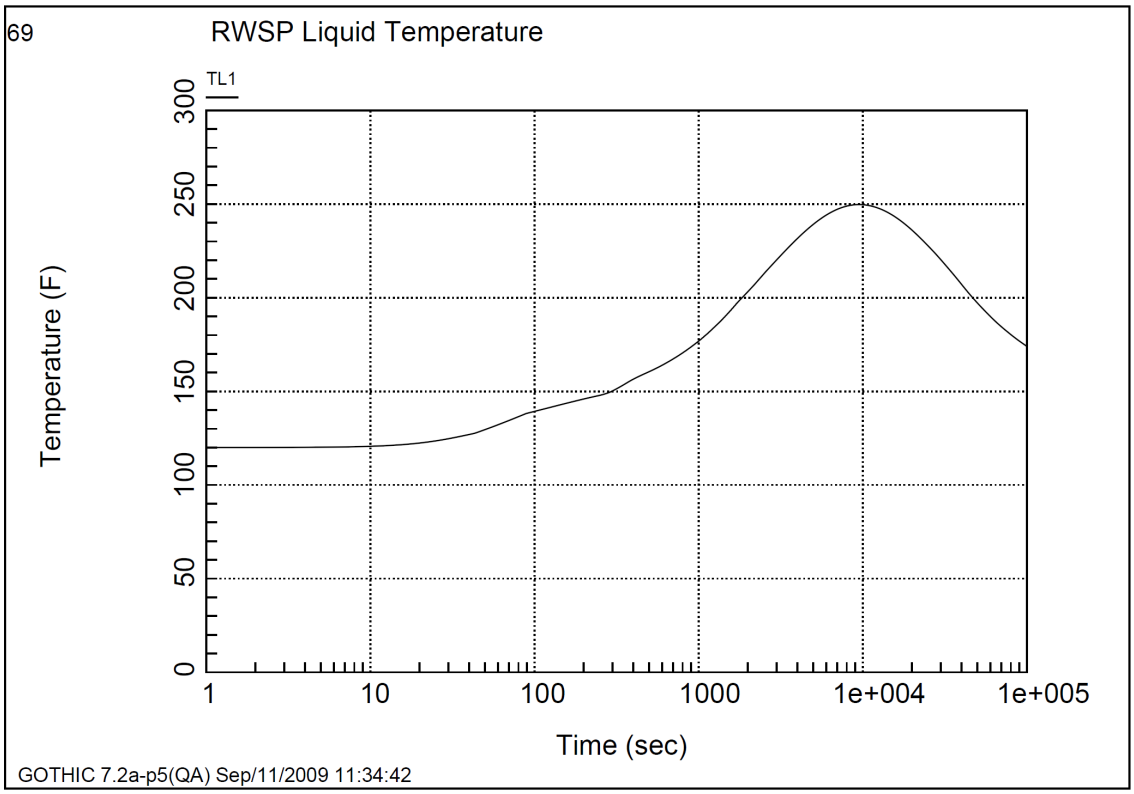

Figure 6.2.1-23 RWSP Water Temperature vs. Time for DEPSG Break (C_D=0.6)

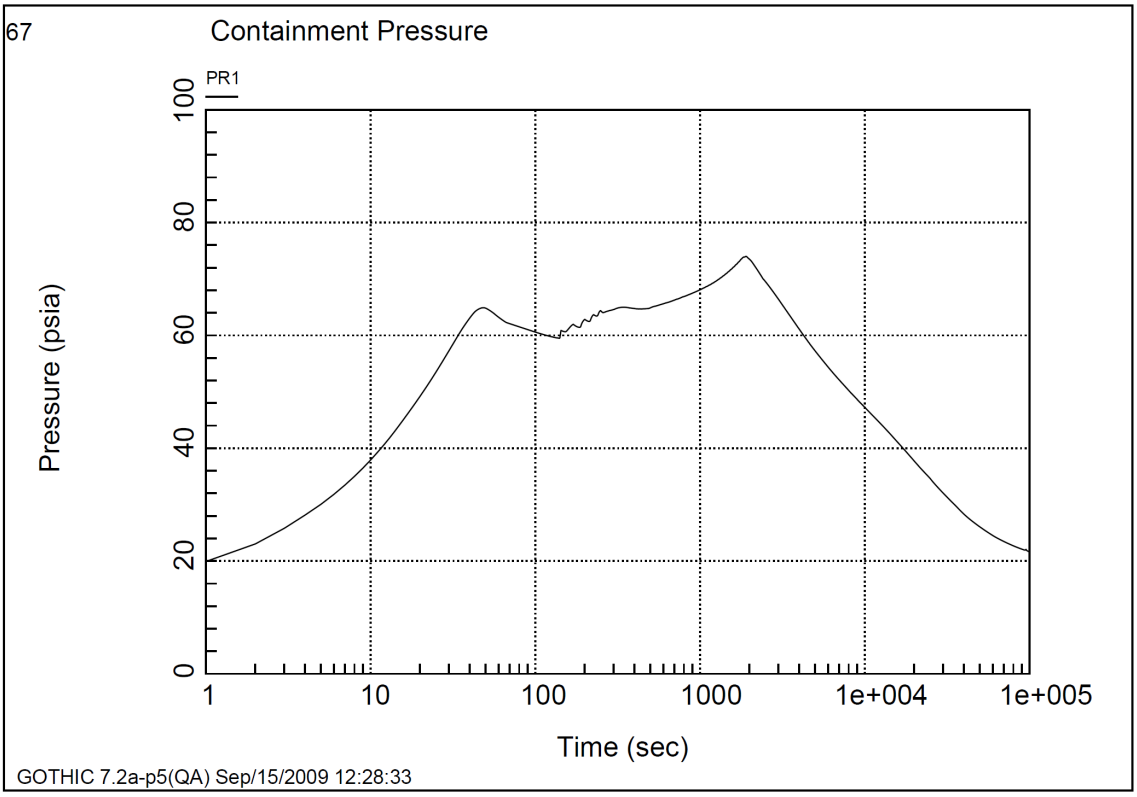

Figure 6.2.1-24 Containment Pressure vs. Time for 3 ft^2 Pump Suction Break

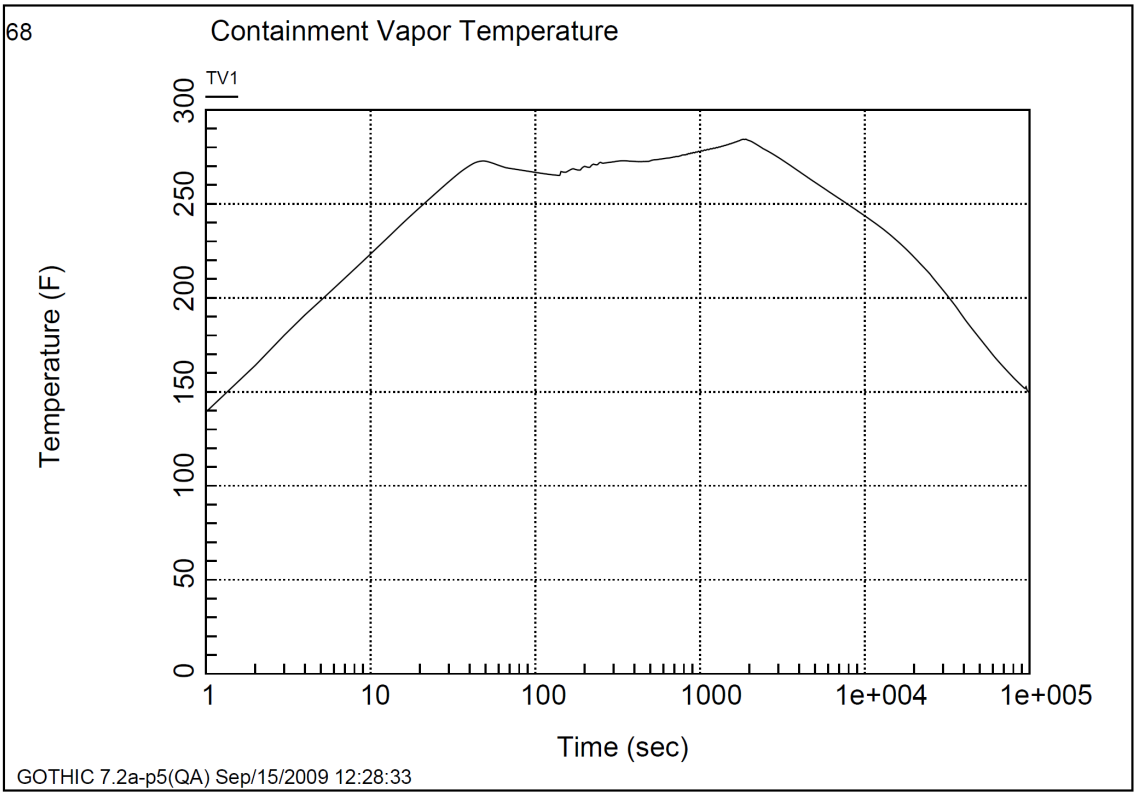

Figure 6.2.1-25 Containment Atmospheric Temperature vs. Time for 3 ft^2 Pump Suction Break

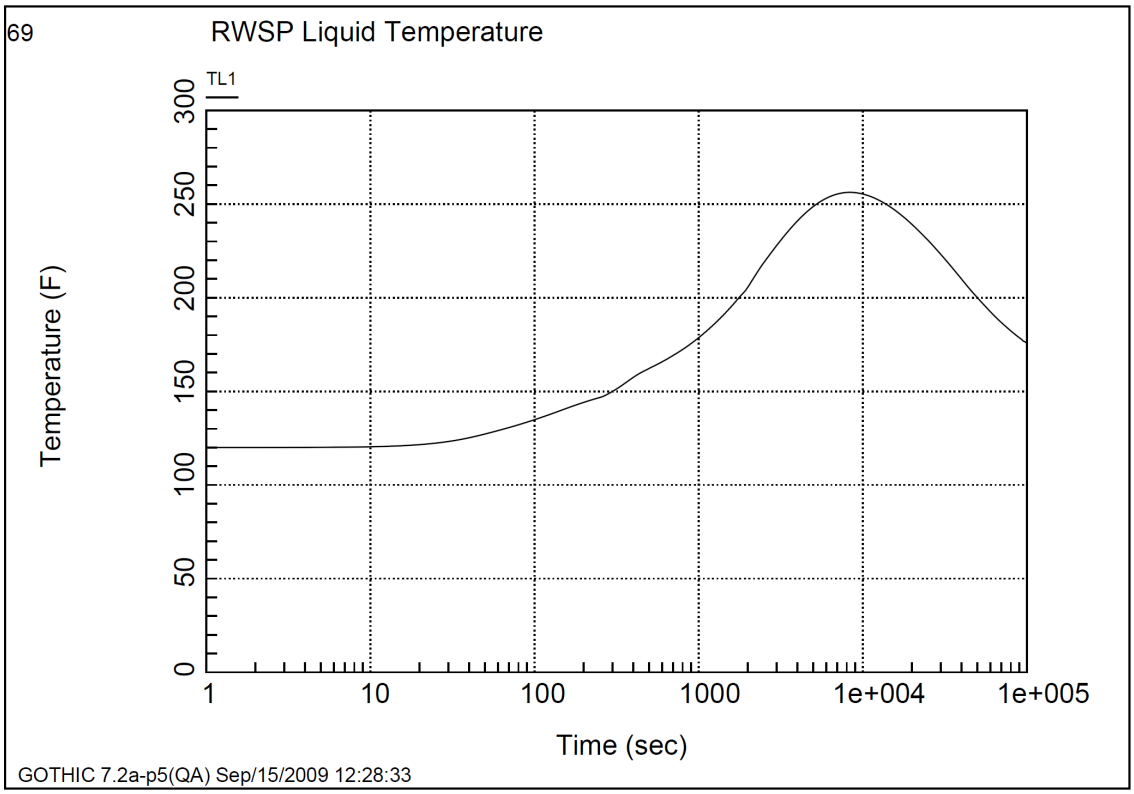

Figure 6.2.1-26 RWSP Water Temperature vs. Time for 3 ft^2 Pump Suction Break

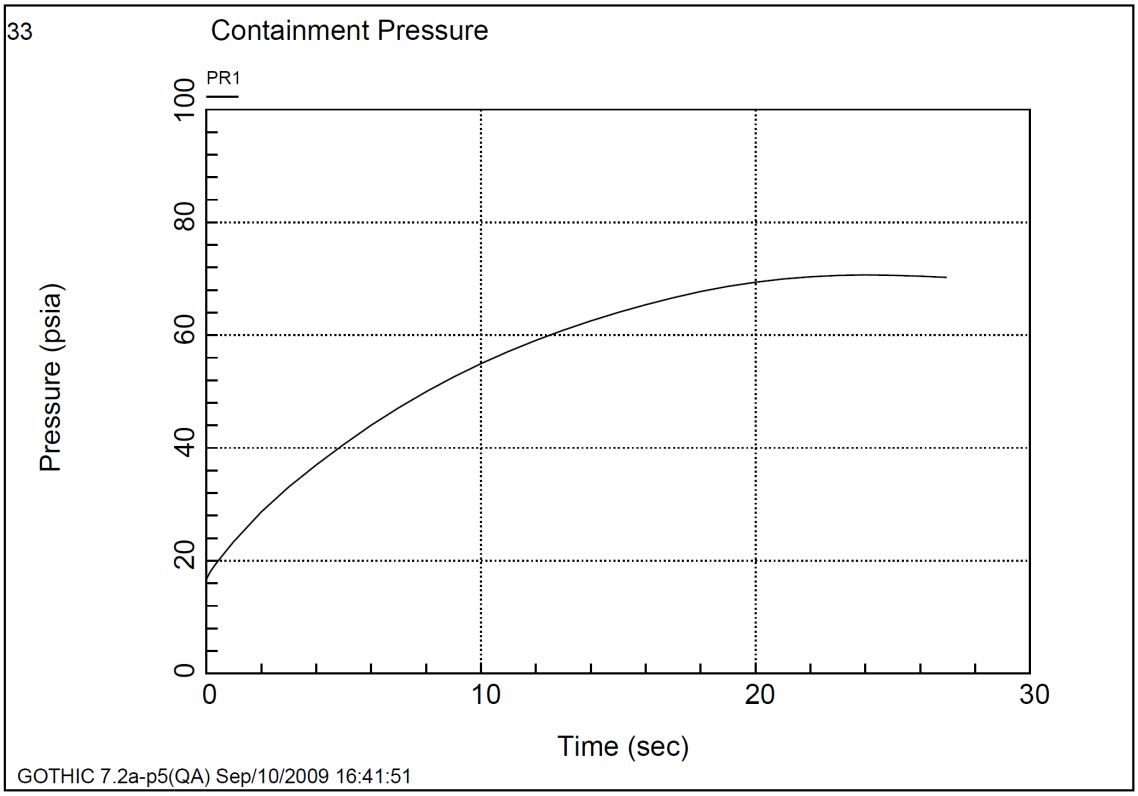

Figure 6.2.1-27 Containment Pressure vs. Time for DEHLG Break (C_D=1.0)

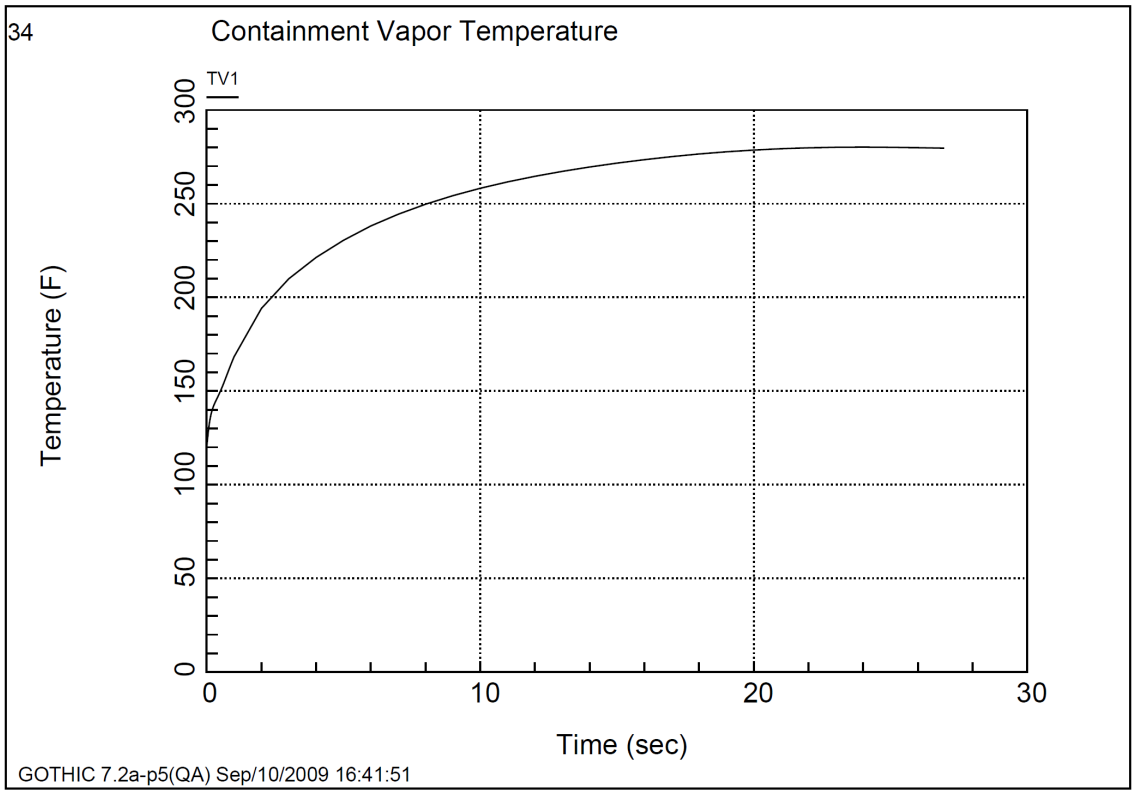

Figure 6.2.1-28 Containment Atmospheric Temperature vs. Time for DEHLG Break (C_D=1.0)

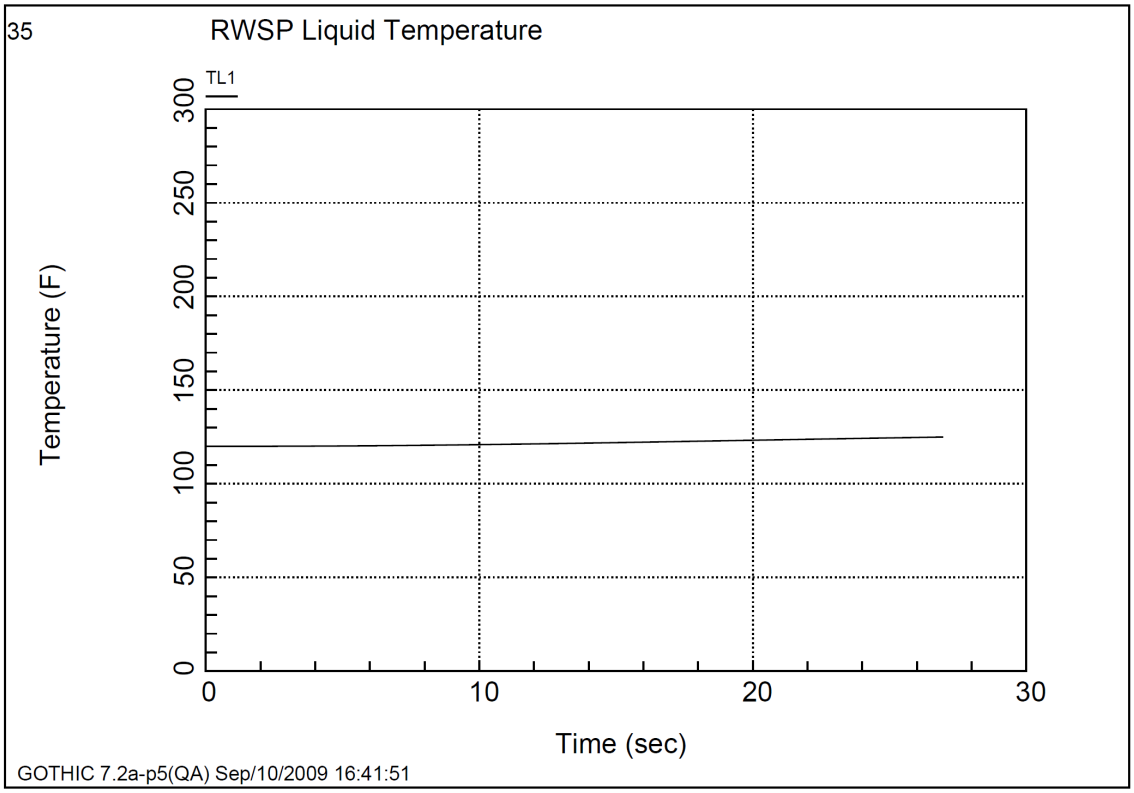

Figure 6.2.1-29 RWSP Water Temperature vs. Time for DEHLG Break (C_D=1.0)

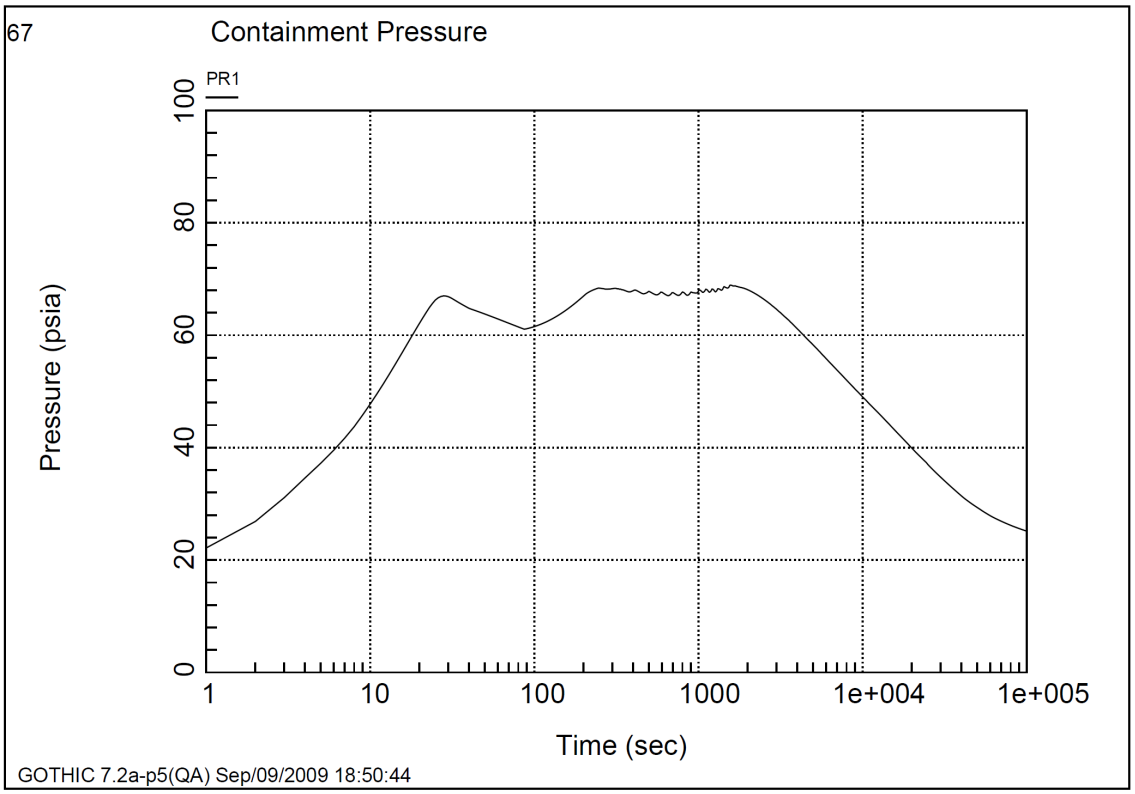

Figure 6.2.1-30 Containment Pressure vs. Time for DEPSG Break with Maximum Safety Injection

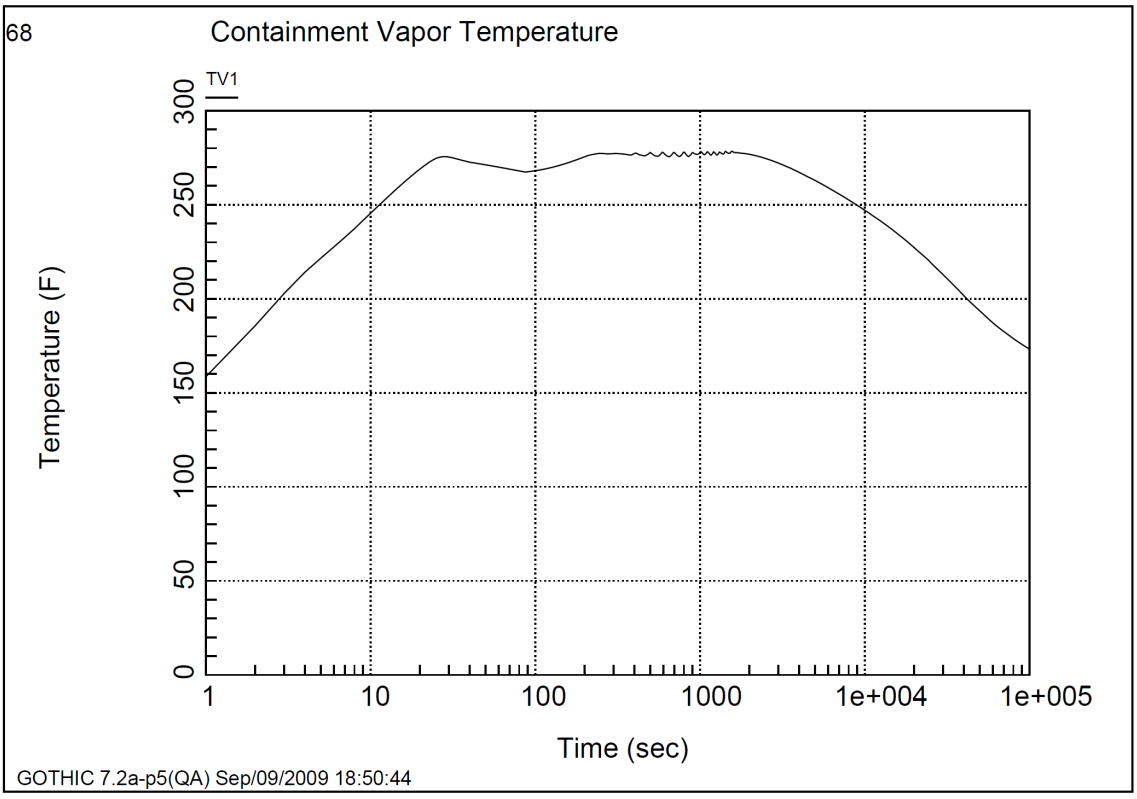

Figure 6.2.1-31 Containment Atmospheric Temperature vs. Time for DEPSG Break with Maximum Safety Injection

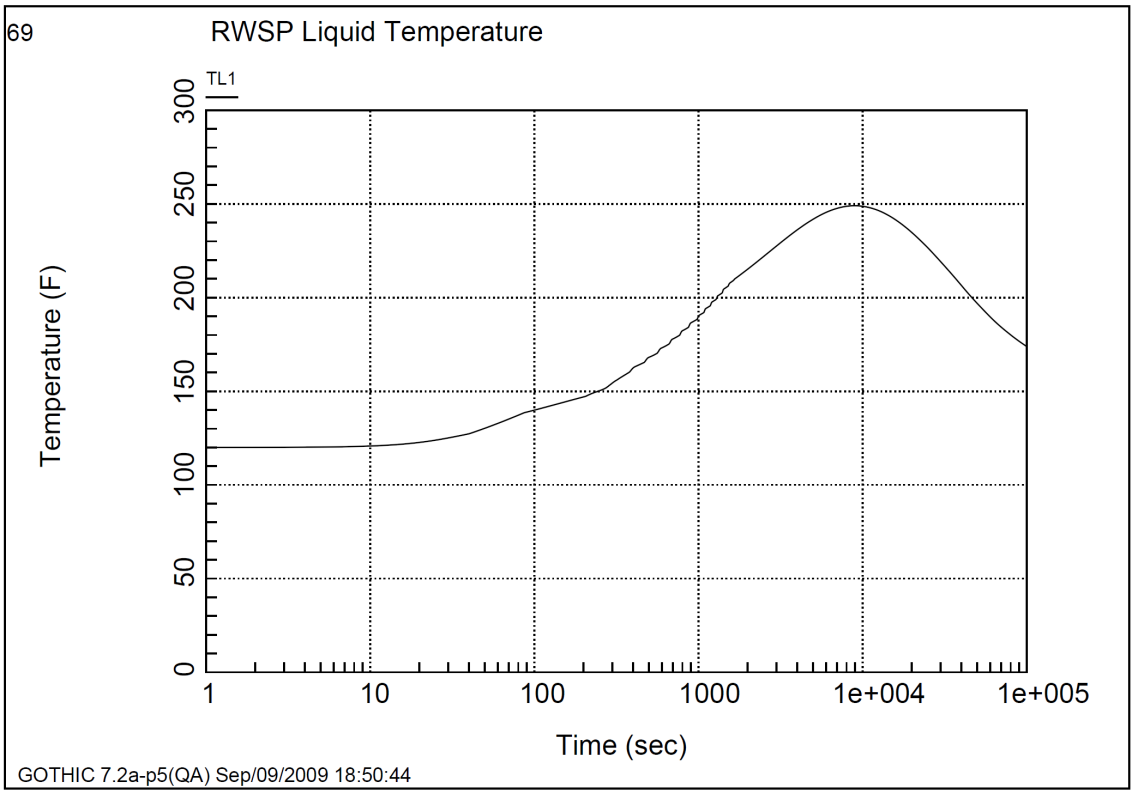

Figure 6.2.1-32 RWSP Water Temperature vs. Time for DEPSG Break with Maximum Safety Injection

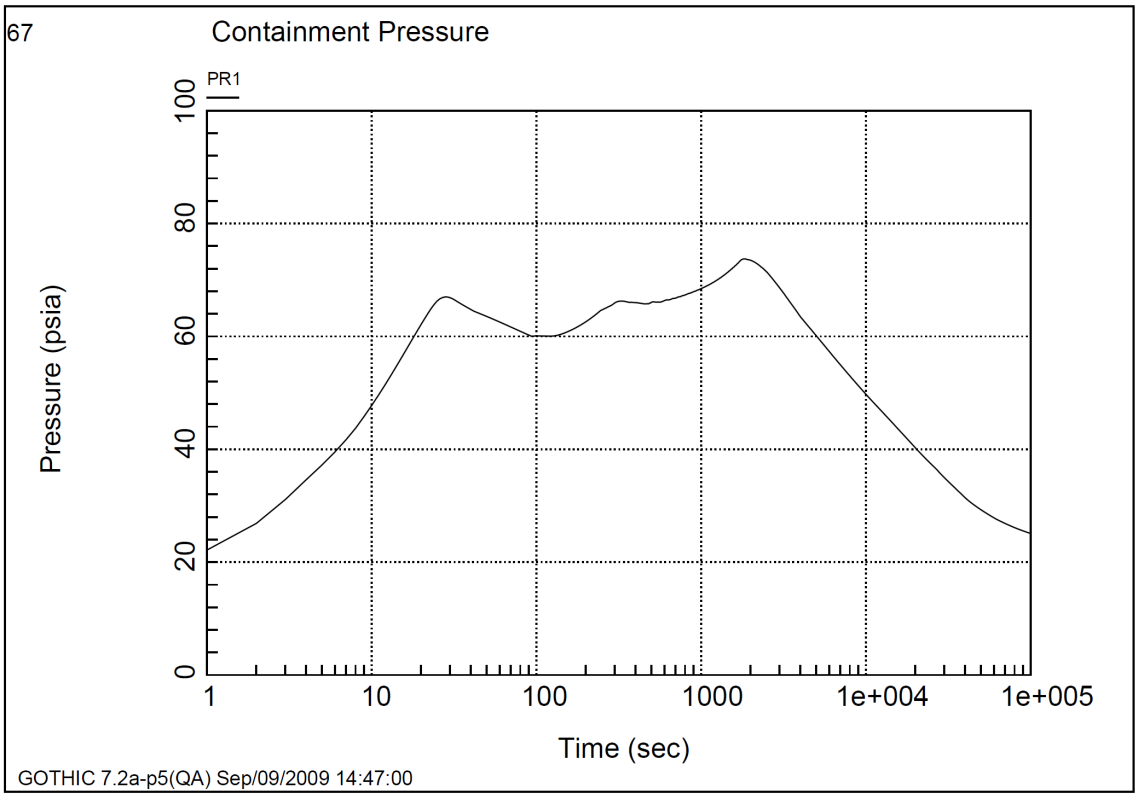

Figure 6.2.1-33 Containment Pressure vs. Time for DEPSG Break with Maximum Accumulator Water

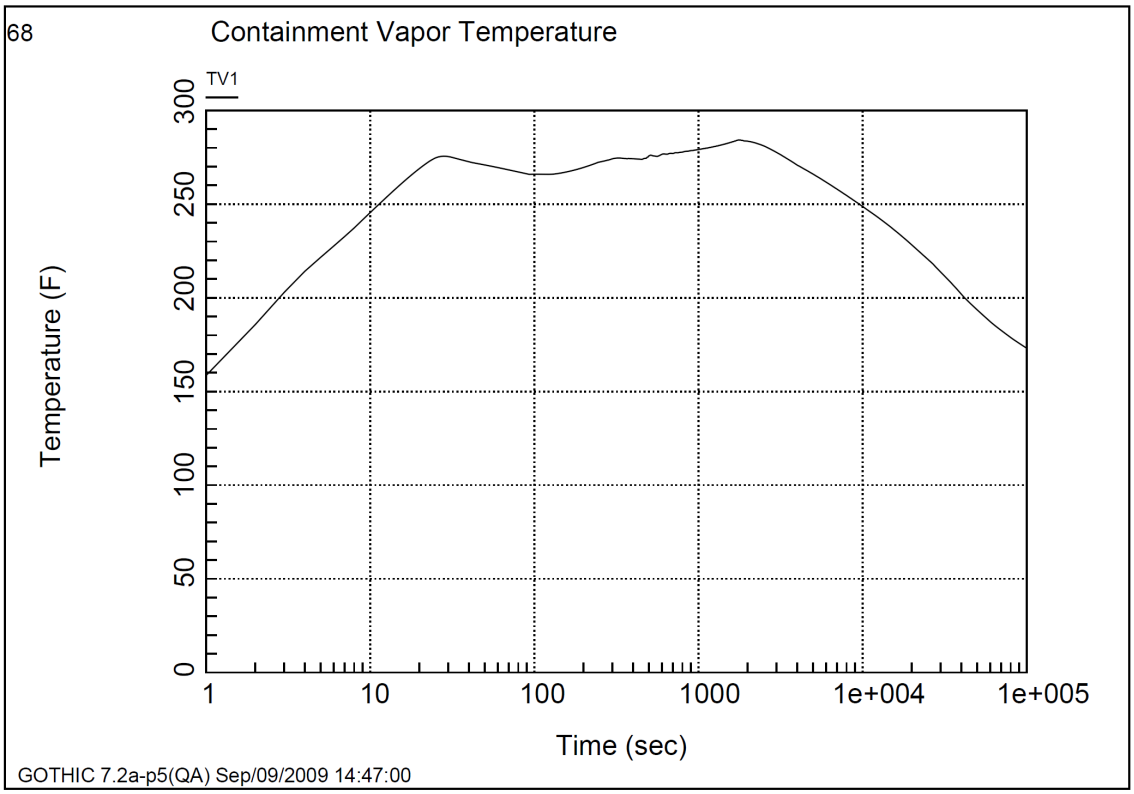

Figure 6.2.1-34 Containment Atmospheric Temperature vs. Time for DEPSG Break with Maximum Accumulator Water

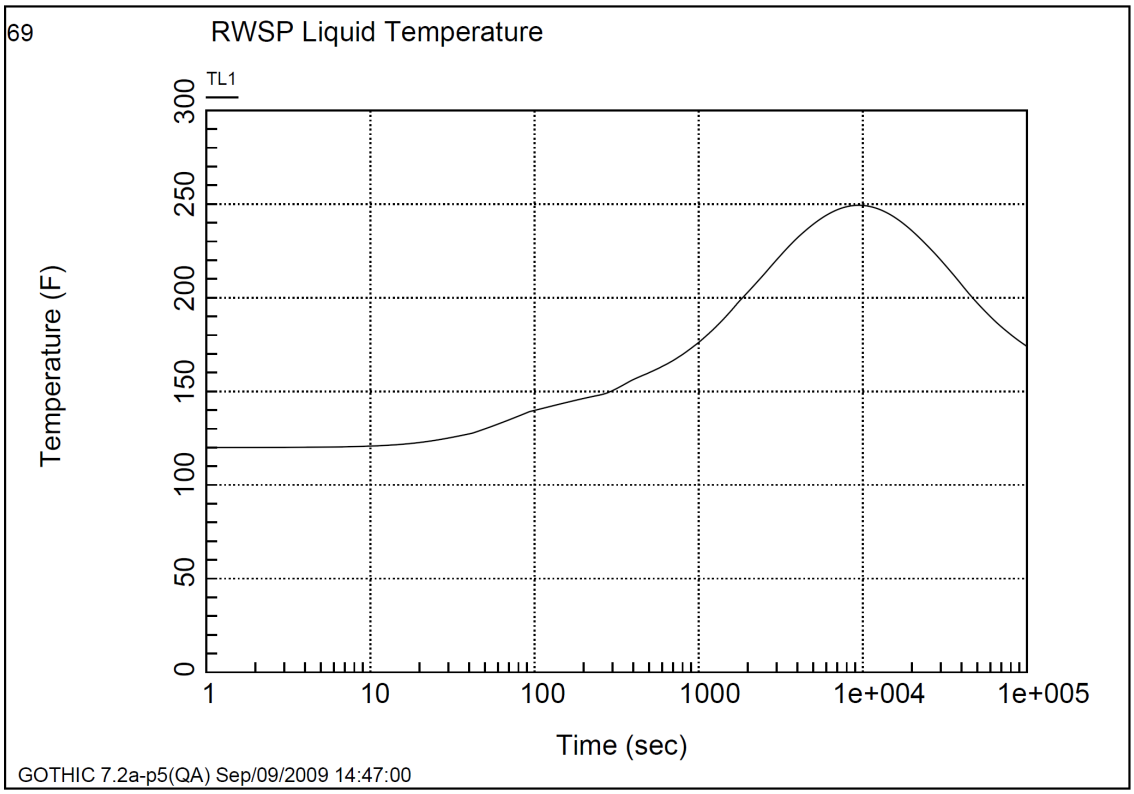

Figure 6.2.1-35 RWSP Water Temperature vs. Time for DEPSG Break with Maximum Accumulator Water

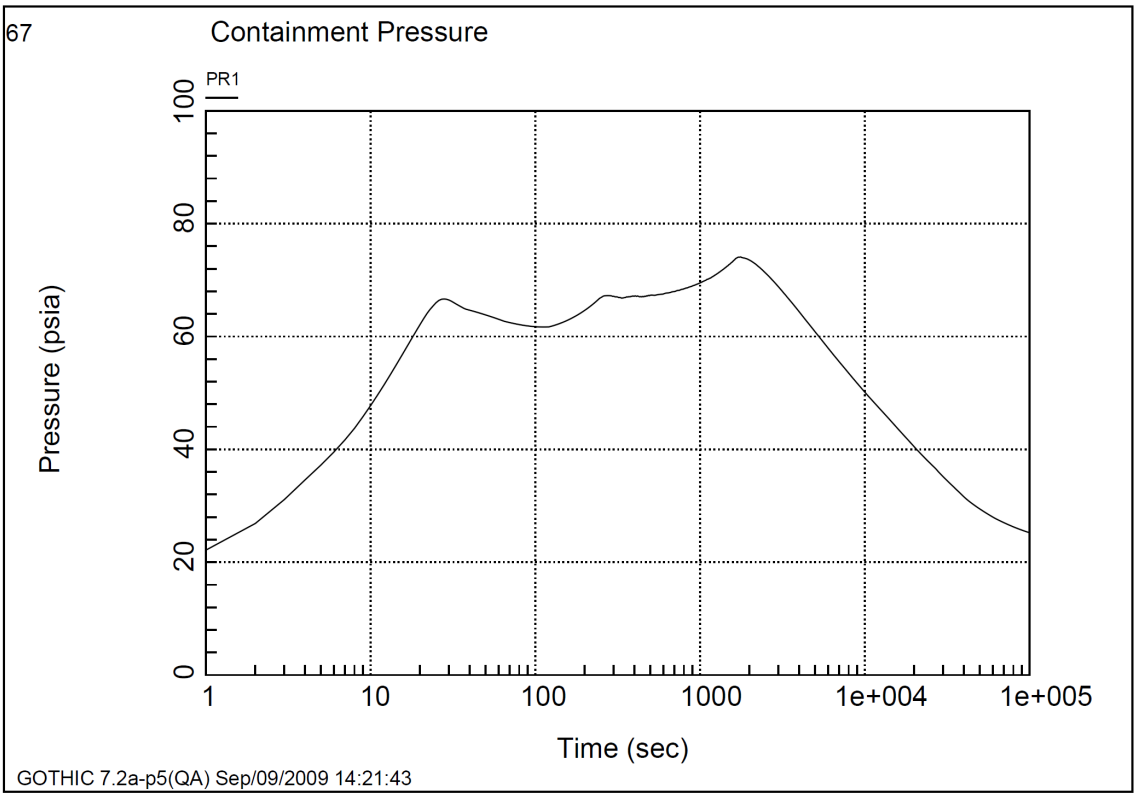

Figure 6.2.1-36 Containment Pressure vs. Time for DEPSG Break with Maximum Accumulator Flowrate

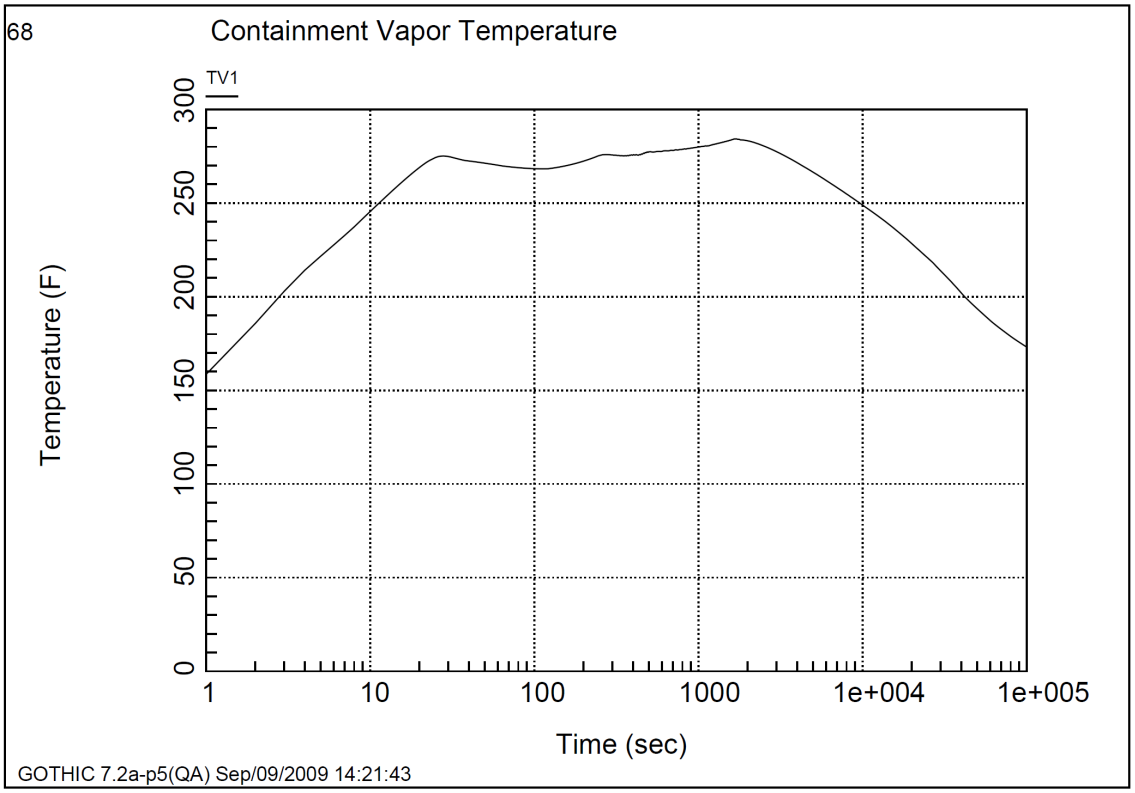

Figure 6.2.1-37 Containment Atmospheric Temperature vs. Time for DEPSG Break with Maximum Accumulator Flowrate

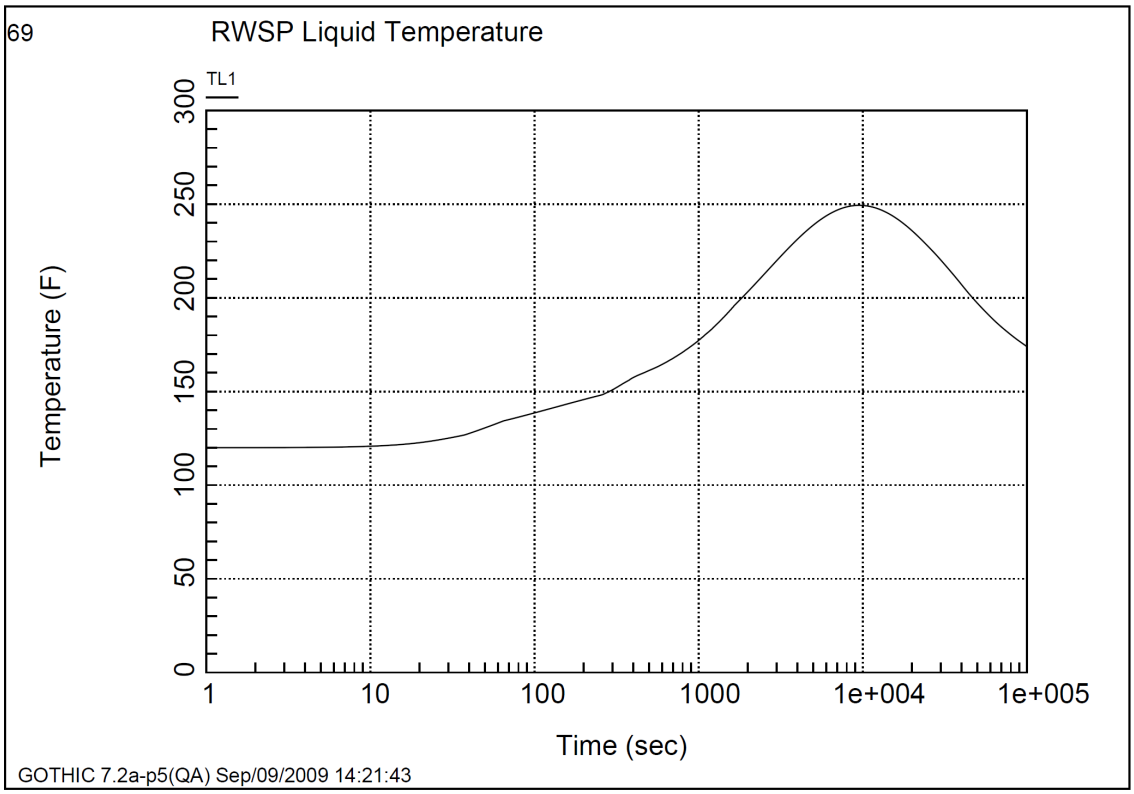

Figure 6.2.1-38 RWSP Water Temperature vs. Time for DEPSG Break with Maximum Accumulator Flowrate

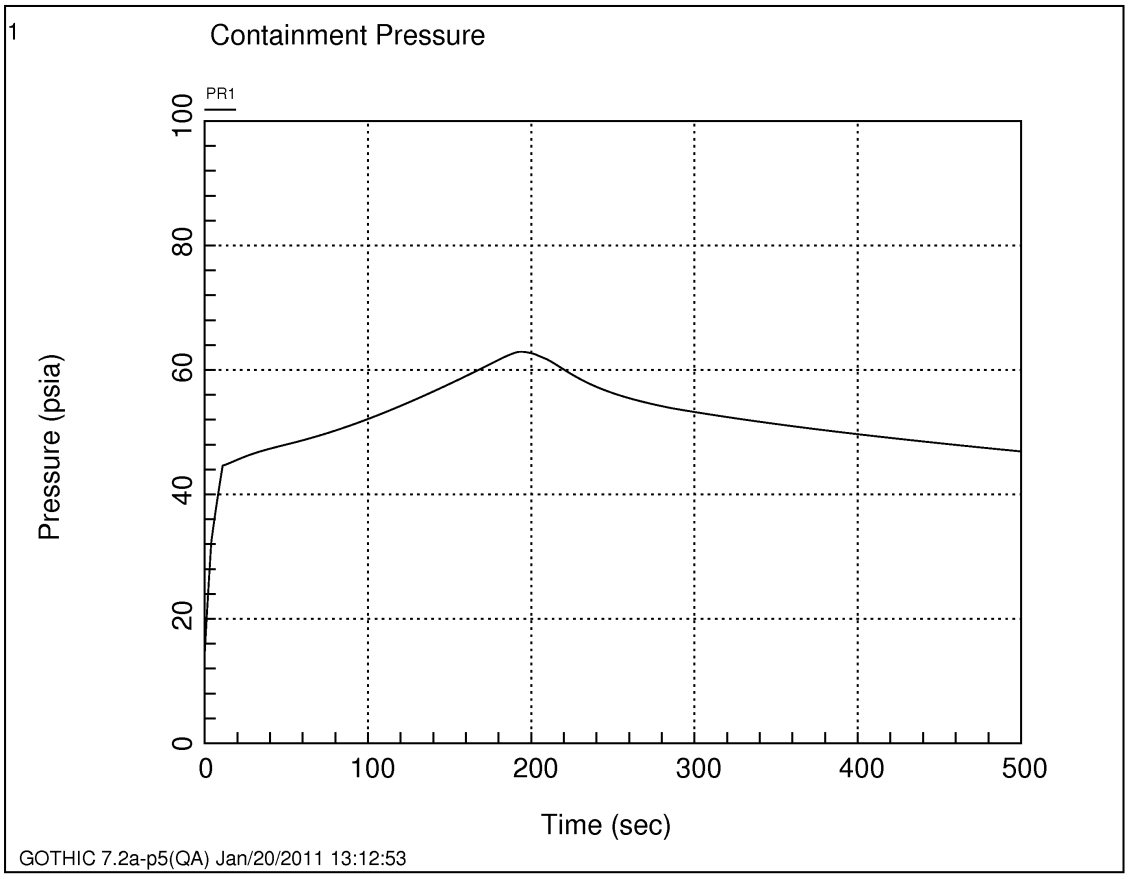

Figure 6.2.1-39 Containment Pressure vs. Time for MSLB Case 1 (Double Ended Break, Reactor Power Level 102%, Offsite Power Available)

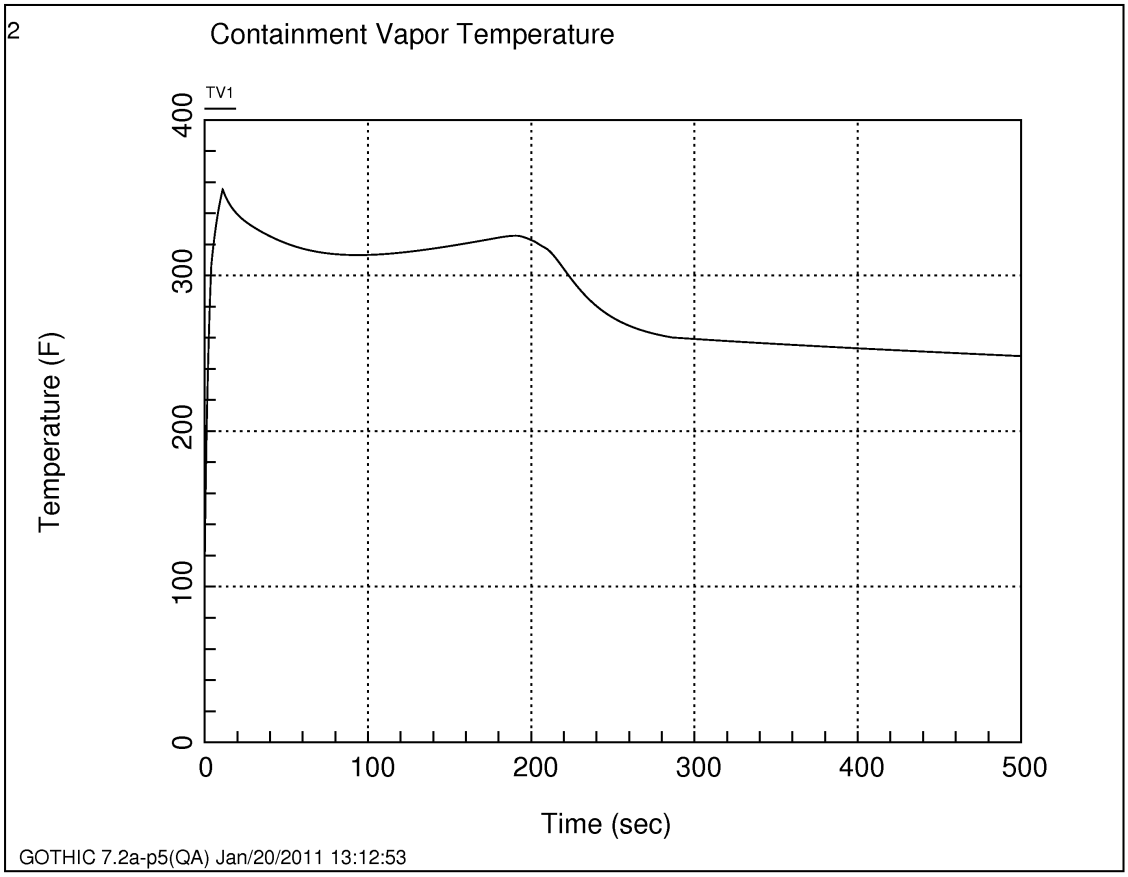

Figure 6.2.1-40 Containment Atmospheric Temperature vs. Time for MSLB Case 1 (Double Ended Break, Reactor Power Level 102%, Offsite Power Available)

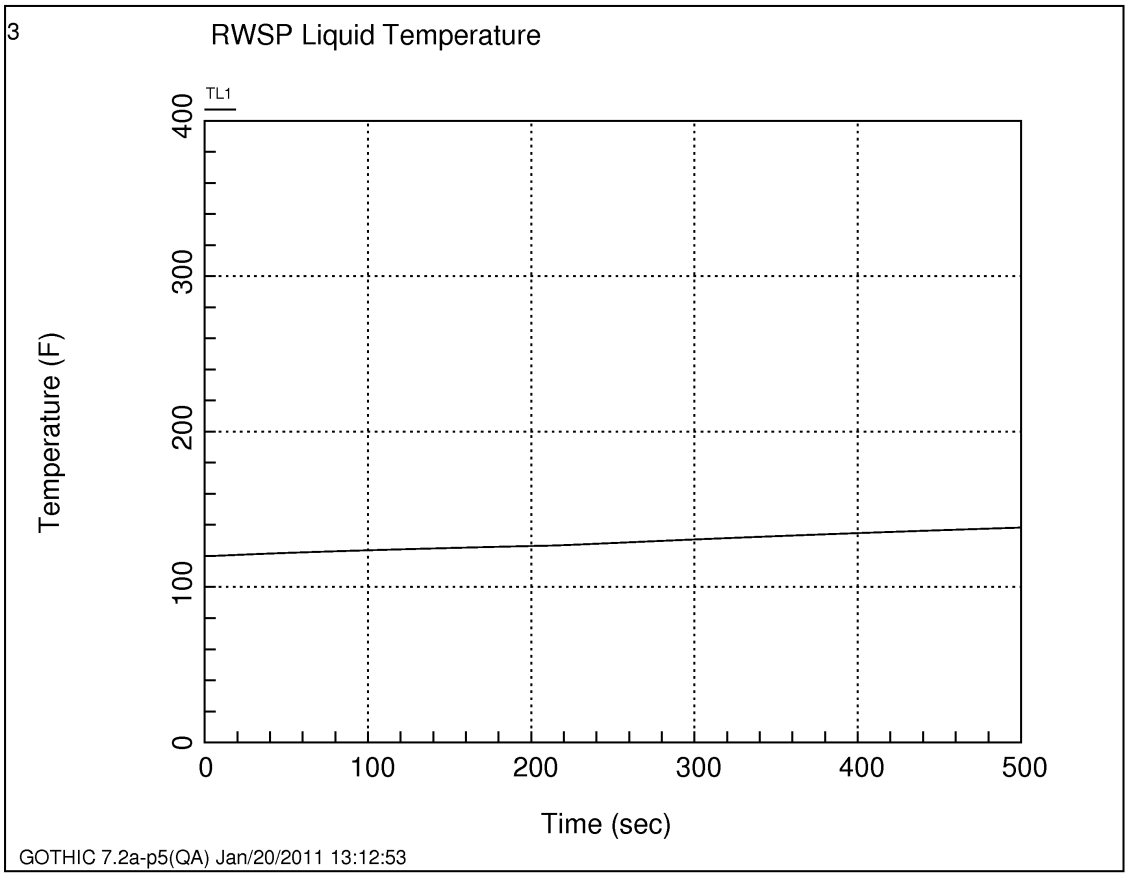

Figure 6.2.1-41 RWSP Water Temperature vs. Time for MSLB Case 1 (Double Ended Break, Reactor Power Level 102%, Offsite Power Available)

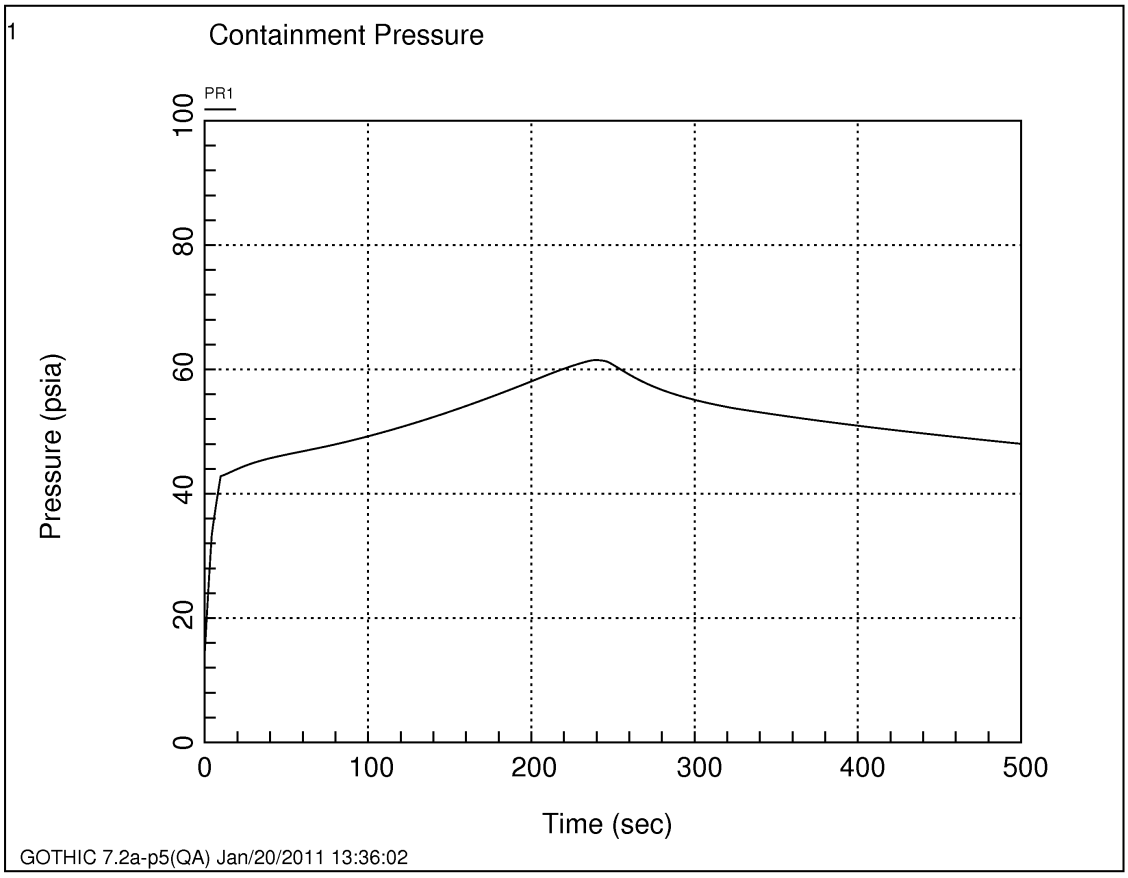

Figure 6.2.1-42 Containment Pressure vs. Time for MSLB Case 2 (Double Ended Break, Reactor Power Level 75%, Offsite Power Available)

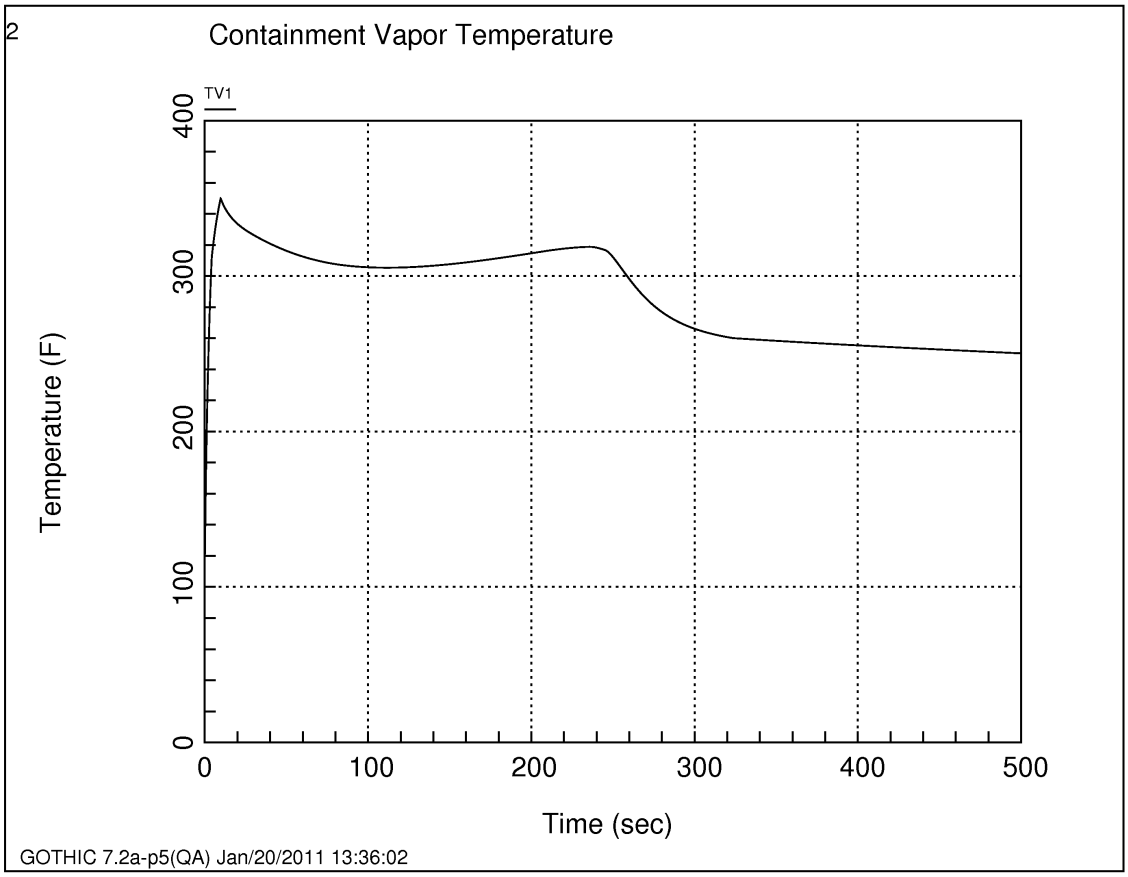

Figure 6.2.1-43 Containment Atmospheric Temperature vs. Time for MSLB Case 2 (Double Ended Break, Reactor Power Level 75%, Offsite Power Available)

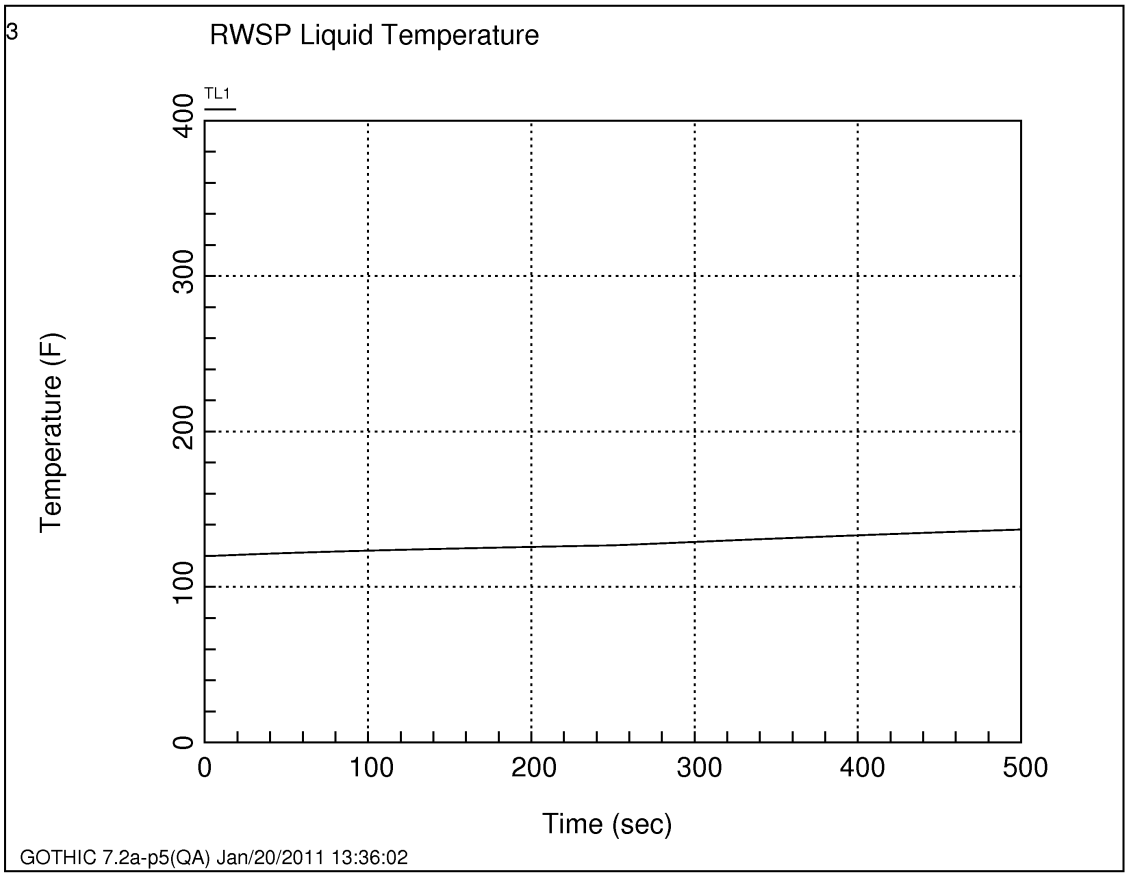

Figure 6.2.1-44 RWSP Water Temperature vs. Time for MSLB Case 2 (Double Ended Break, Reactor Power Level 75%, Offsite Power Available

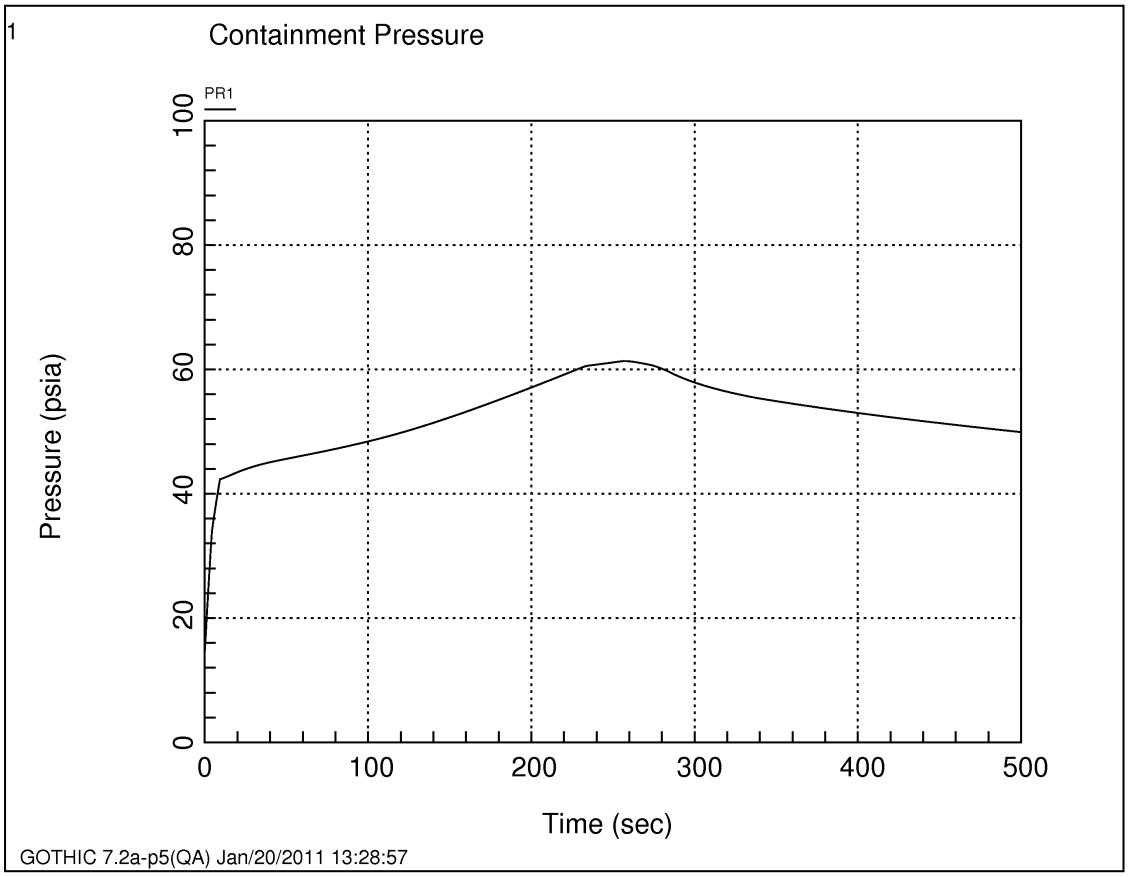

Figure 6.2.1-45 Containment Pressure vs. Time for MSLB Case 3 (Double Ended Break, Reactor Power Level 50%, Offsite Power Available)

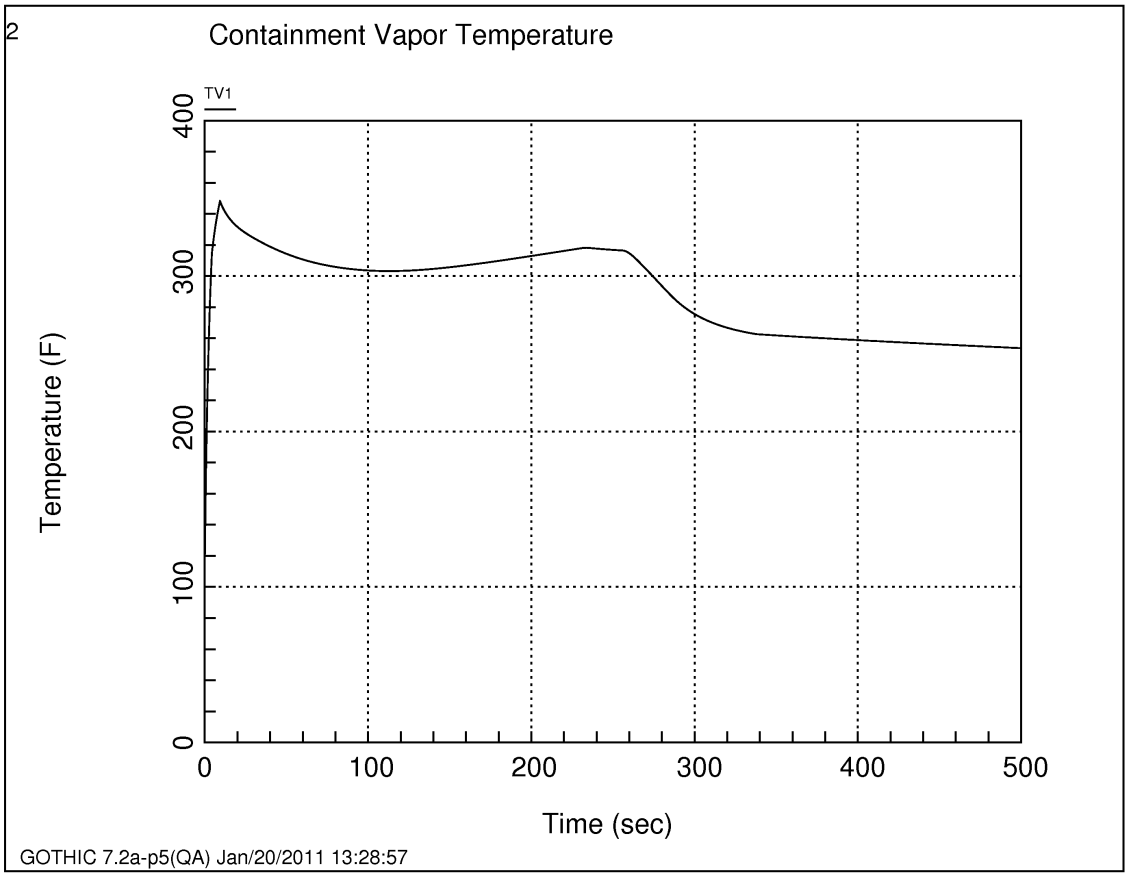

Figure 6.2.1-46 Containment Atmospheric Temperature vs. Time for MSLB Case 3 (Double Ended Break, Reactor Power Level 50%, Offsite Power Available)

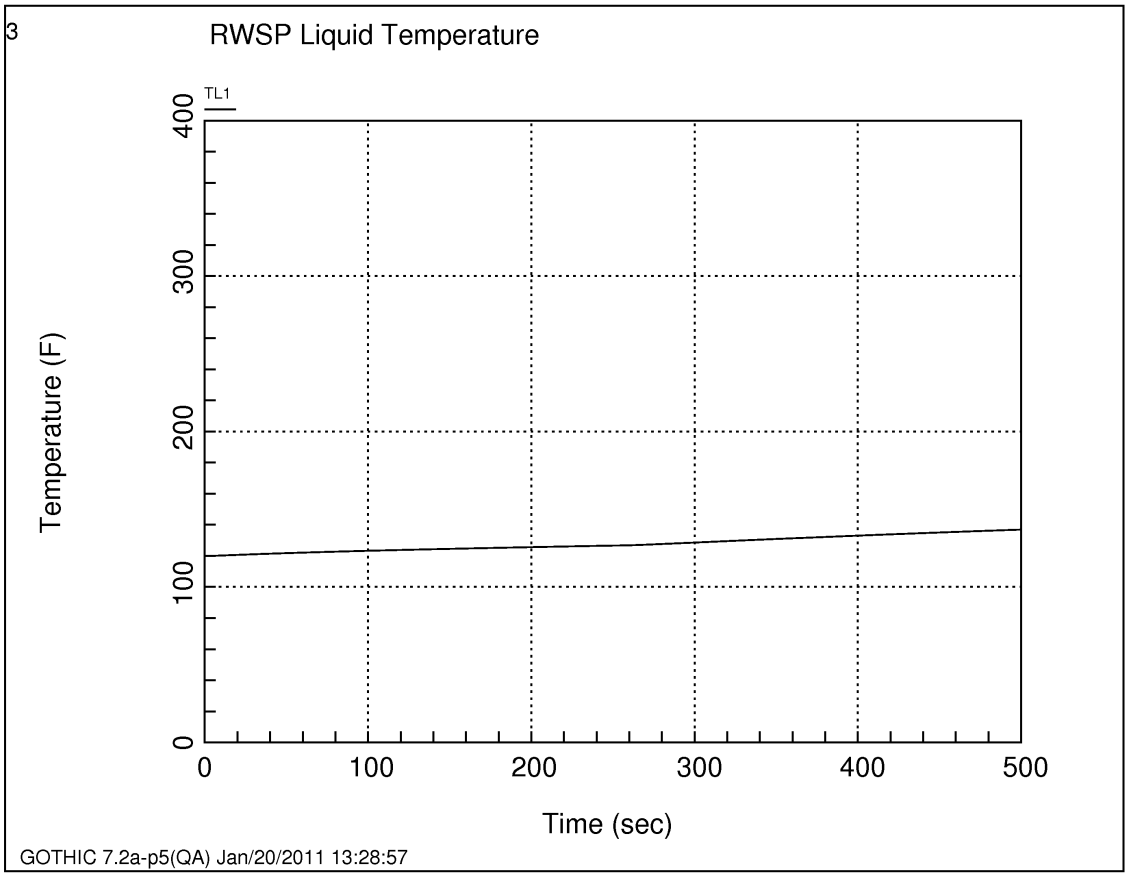

Figure 6.2.1-47 RWSP Water Temperature vs. Time for MSLB Case 3 (Double Ended Break, Reactor Power Level 50%, Offsite Power Available)

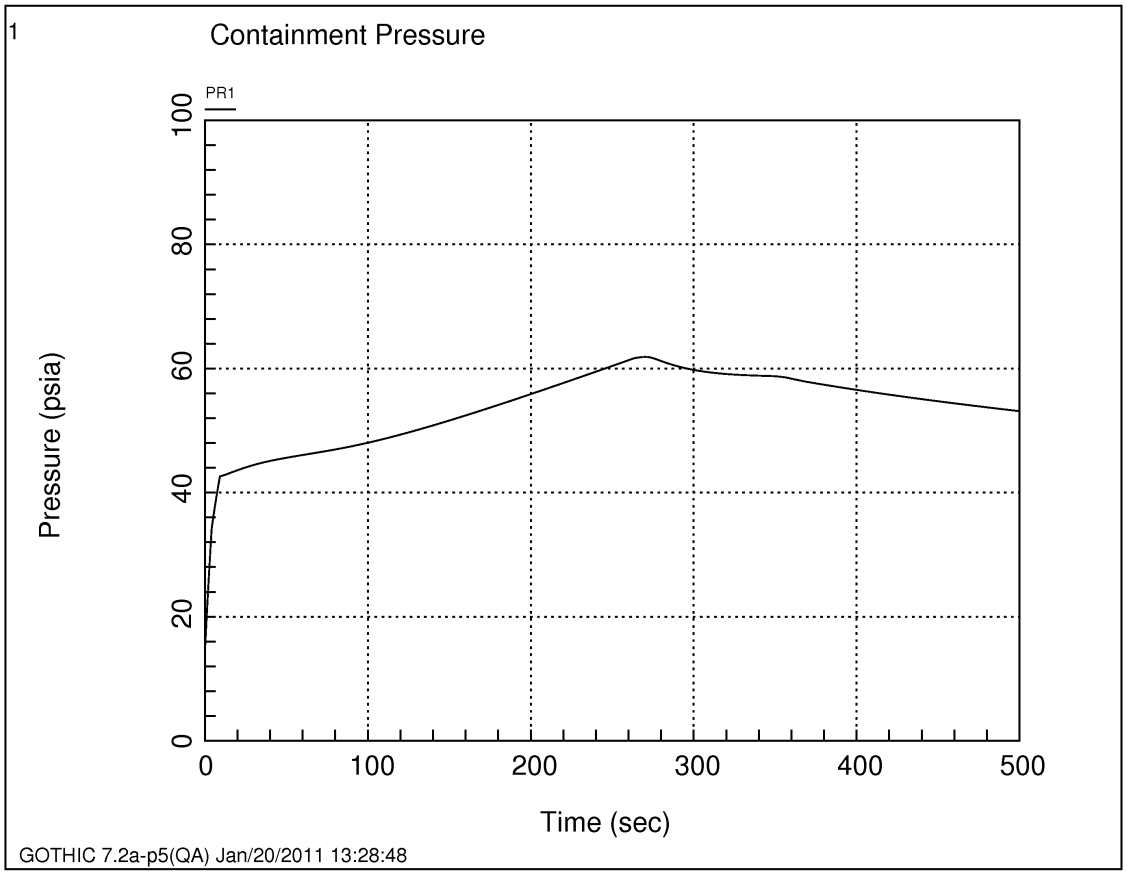

Figure 6.2.1-48 Containment Pressure vs. Time for MSLB Case 4 (Double Ended Break, Reactor Power Level 25%, Offsite Power Available)

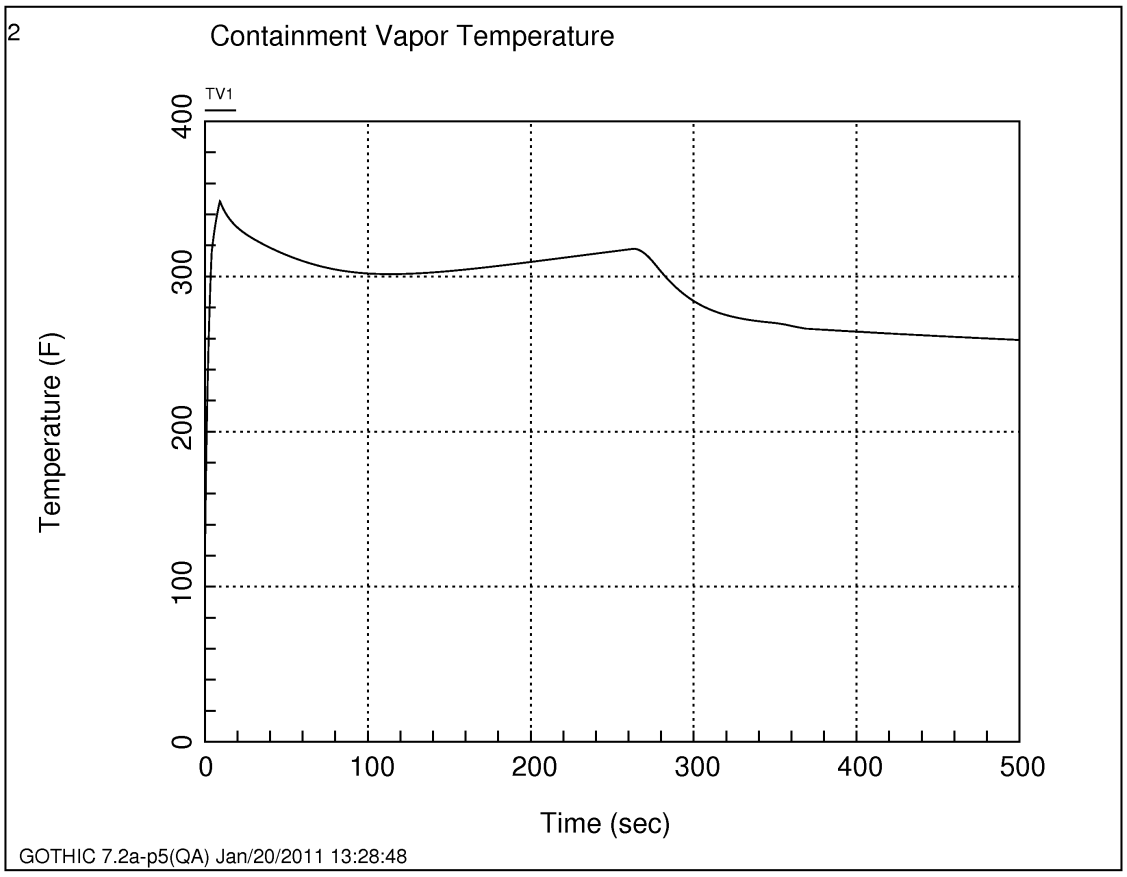

Figure 6.2.1-49 Containment Atmospheric Temperature vs. Time for MSLB Case 4 (Double Ended Break, Reactor Power Level 25%, Offsite Power Available)

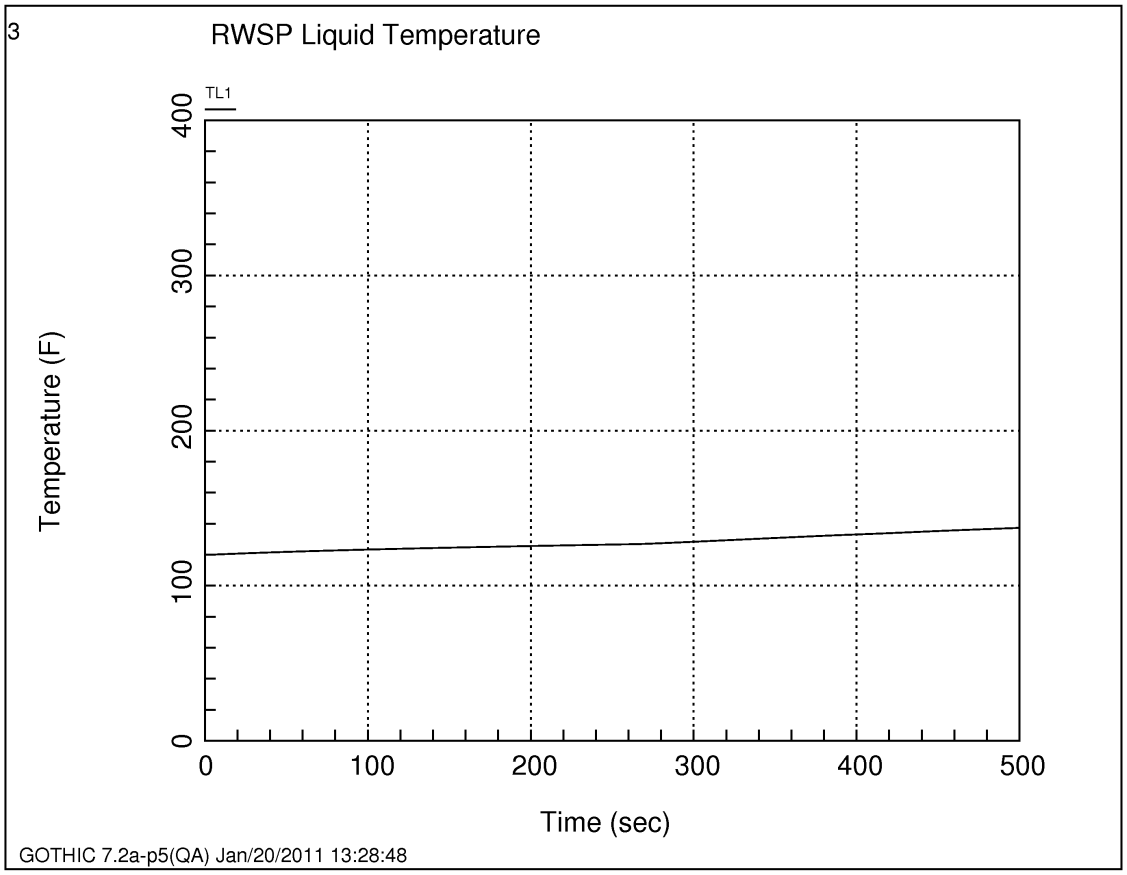

Figure 6.2.1-50 RWSP Water Temperature vs. Time for MSLB Case 4 (Double Ended Break, Reactor Power Level 25%, Offsite Power Available)

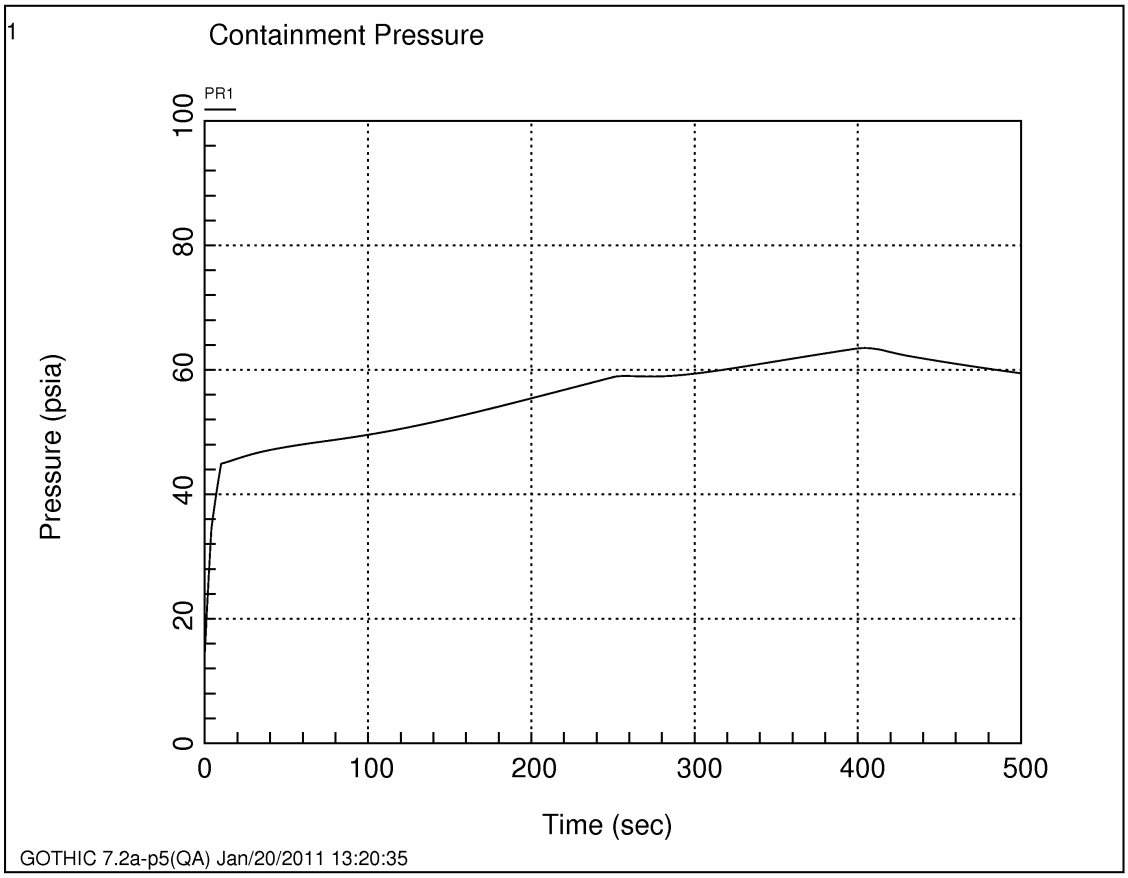

Figure 6.2.1-51 Containment Pressure vs. Time for MSLB Case 5 (Double Ended Break, Reactor Power Level 0%, Offsite Power Available)

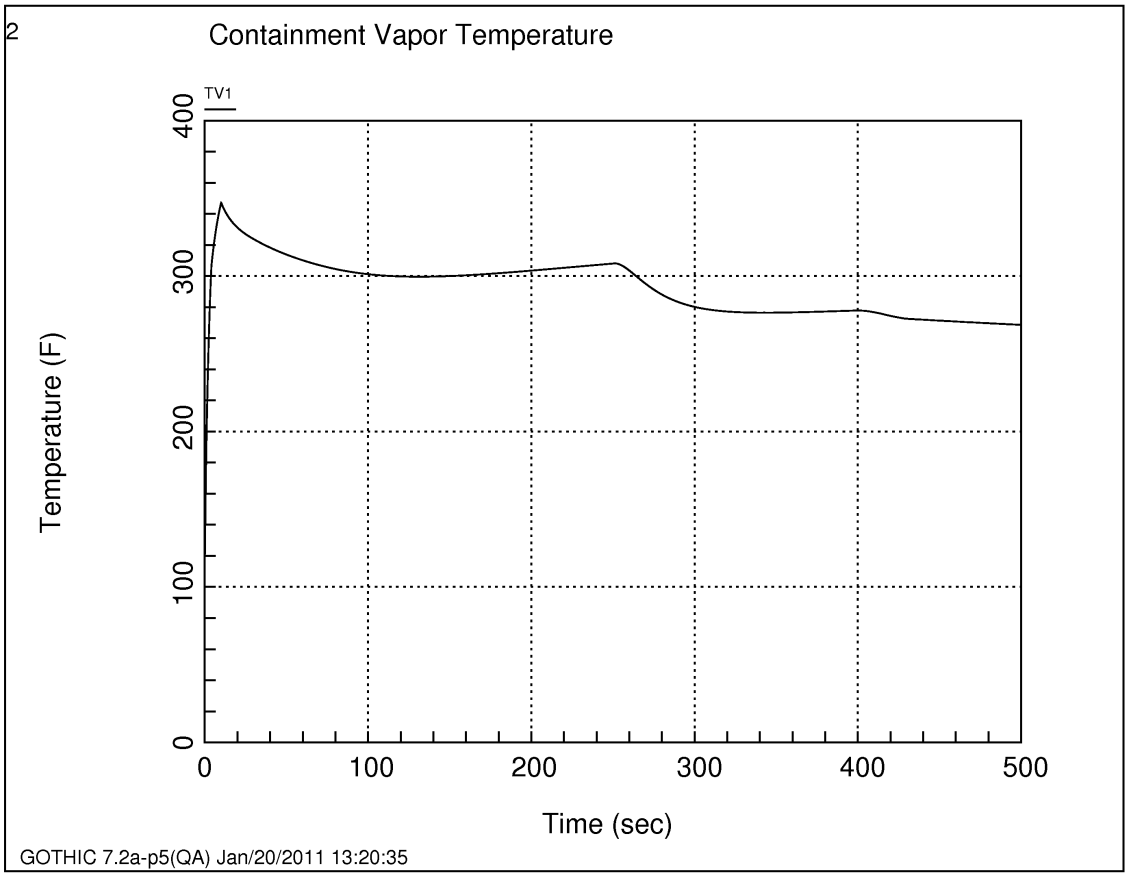

Figure 6.2.1-52 Containment Atmospheric Temperature vs. Time for MSLB Case 5 (Double Ended Break, Reactor Power Level 0%, Offsite Power Available)

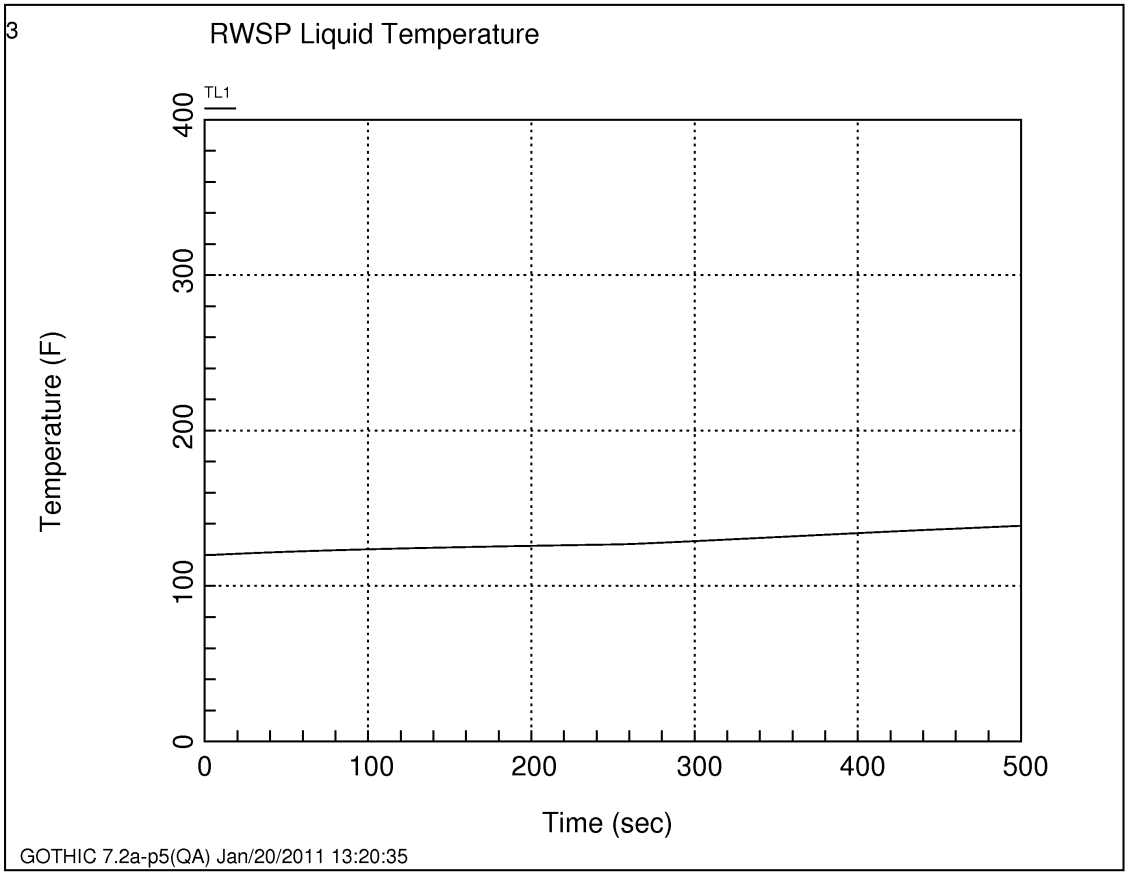

Figure 6.2.1-53 RWSP Water Temperature vs. Time for MSLB Case 5 (Double Ended Break, Reactor Power Level 0%, Offsite Power Available)

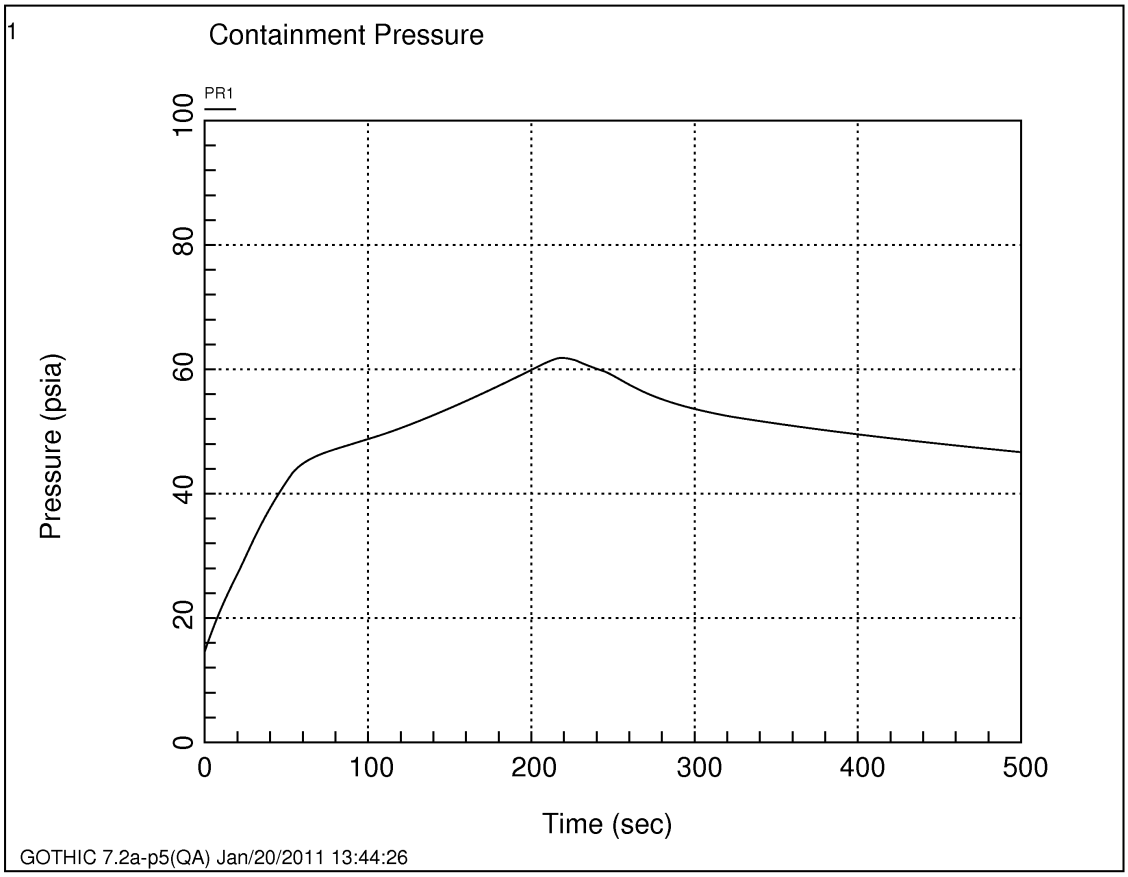

Figure 6.2.1-54 Containment Pressure vs. Time for MSLB Case 6 (1.65ft^2 Split Break, Reactor Power Level 102%, Offsite Power Available)

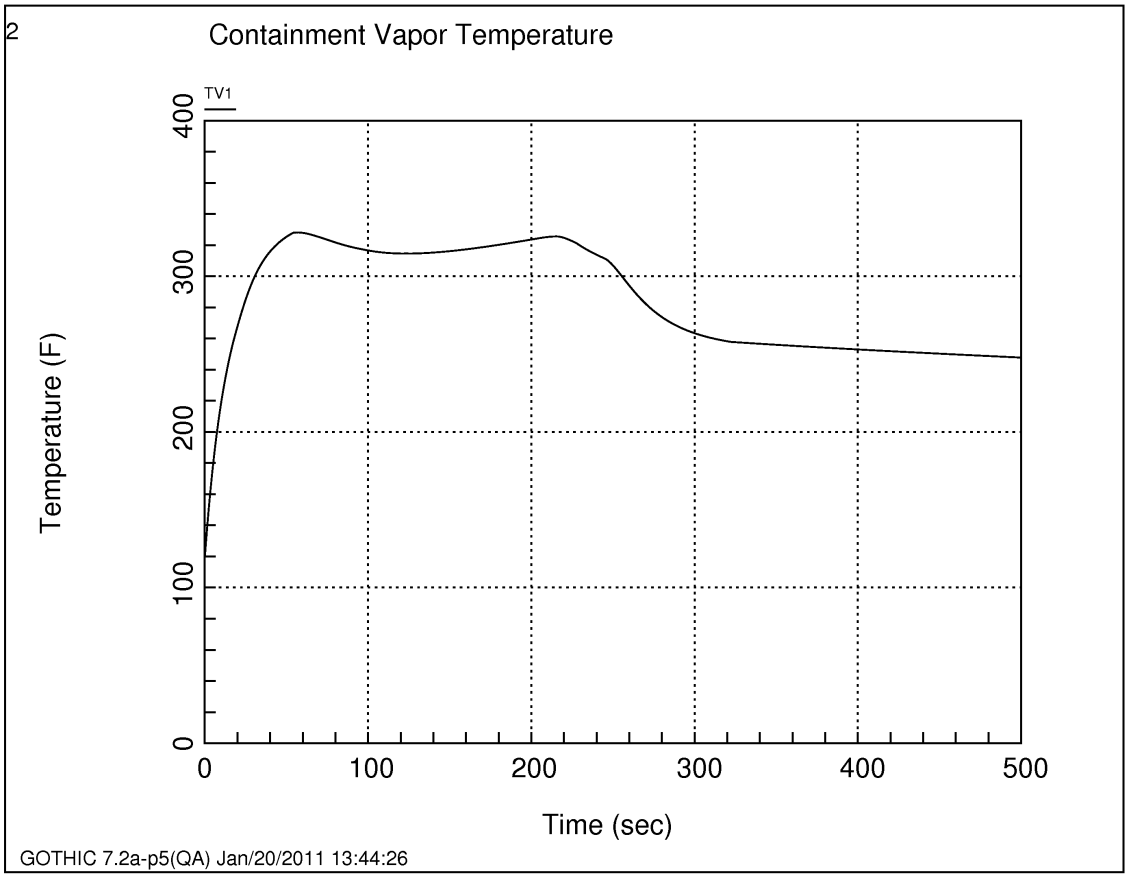

Figure 6.2.1-55 Containment Atmospheric Temperature vs. Time for MSLB Case 6 (1.65ft^2 Split Break, Reactor Power Level 102%, Offsite Power Available)

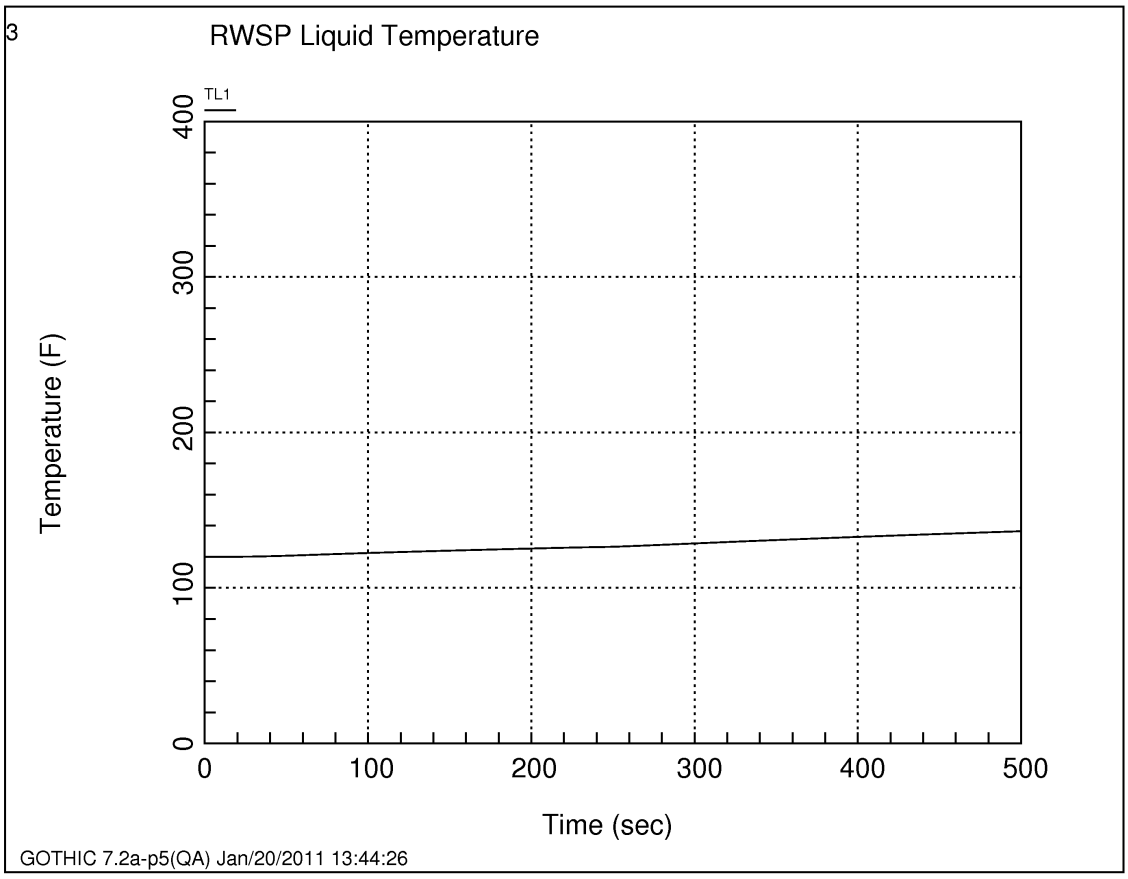

Figure 6.2.1-56 RWSP Water Temperature vs. Time for MSLB Case 6 (1.65ft^2 Split Break, Reactor Power Level 102%, Offsite Power Available)

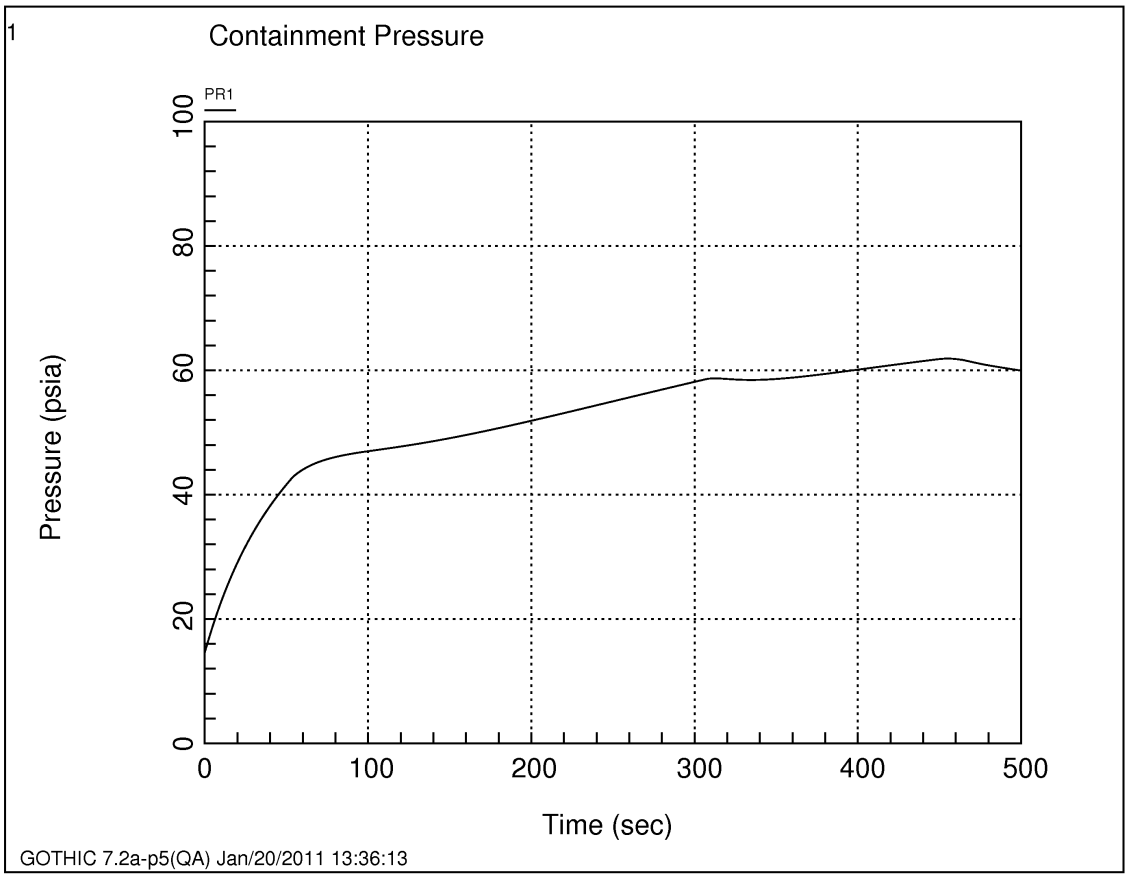

Figure 6.2.1-57 Containment Pressure vs. Time for MSLB Case 7 (1.71ft^2 Split Break, Reactor Power Level 0%, Offsite Power Available)

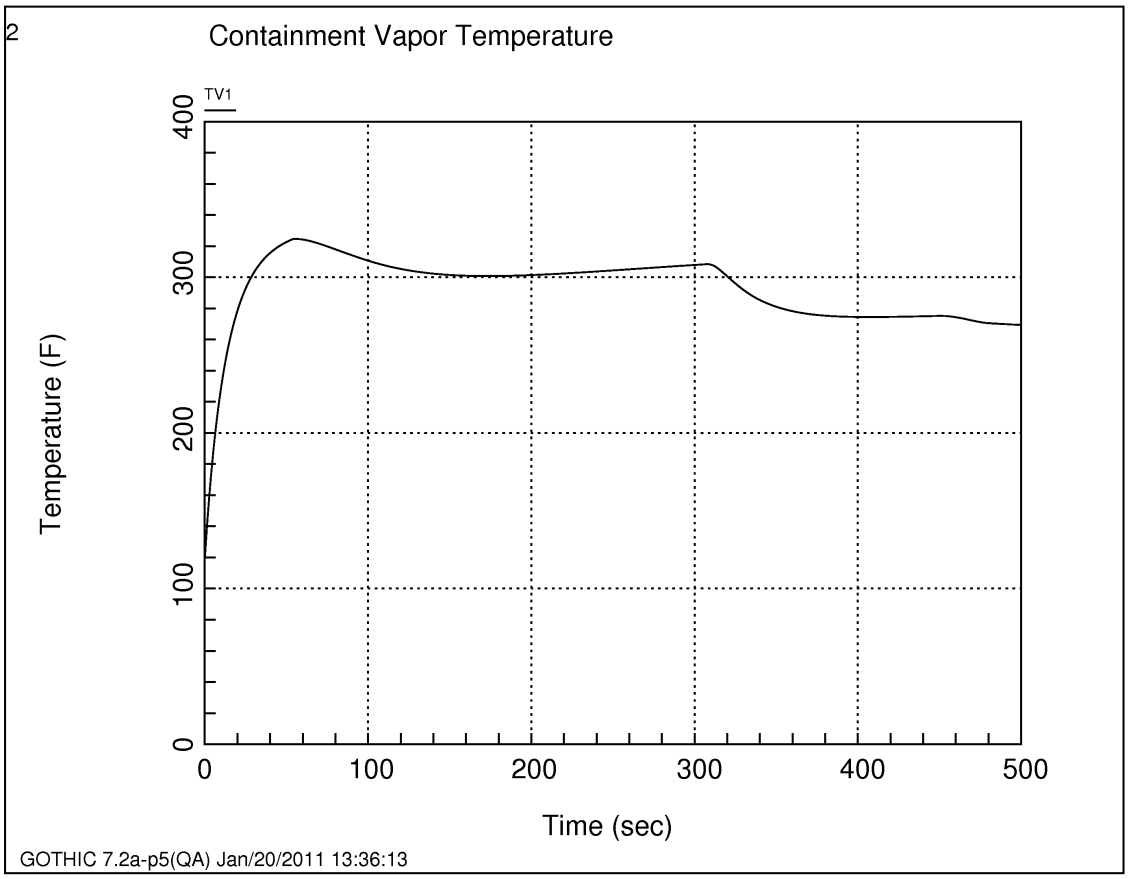

Figure 6.2.1-58 Containment Atmospheric Temperature vs. Time for MSLB Case 7 (1.71ft^2 Split Break, Reactor Power Level 0%, Offsite Power Available)

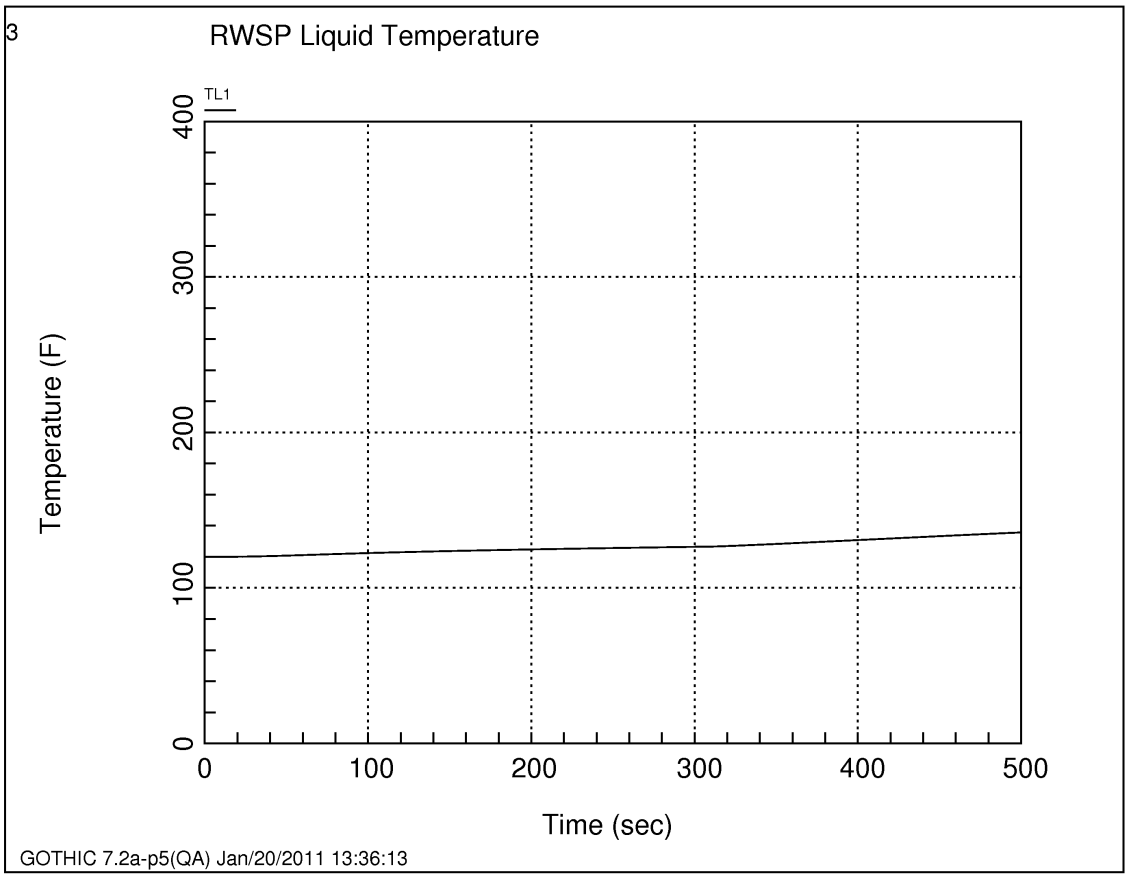

Figure 6.2.1-59 RWSP Water Temperature vs. Time for MSLB Case 7 (1.71ft^2 Split Break, Reactor Power Level 0%, Offsite Power Available)

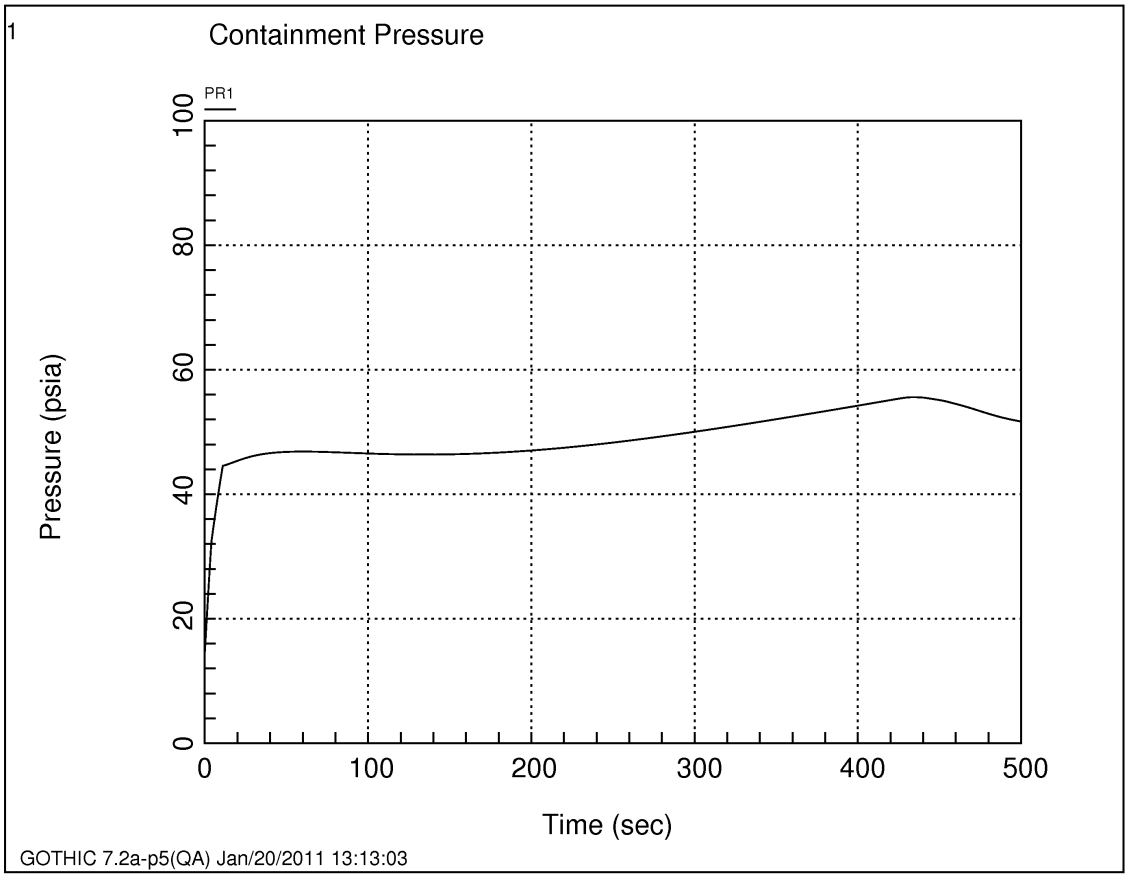

Figure 6.2.1-60 Containment Pressure vs. Time for MSLB Case 8 (Double Ended Break, Reactor Power Level 102%, Loss of Offsite Power)

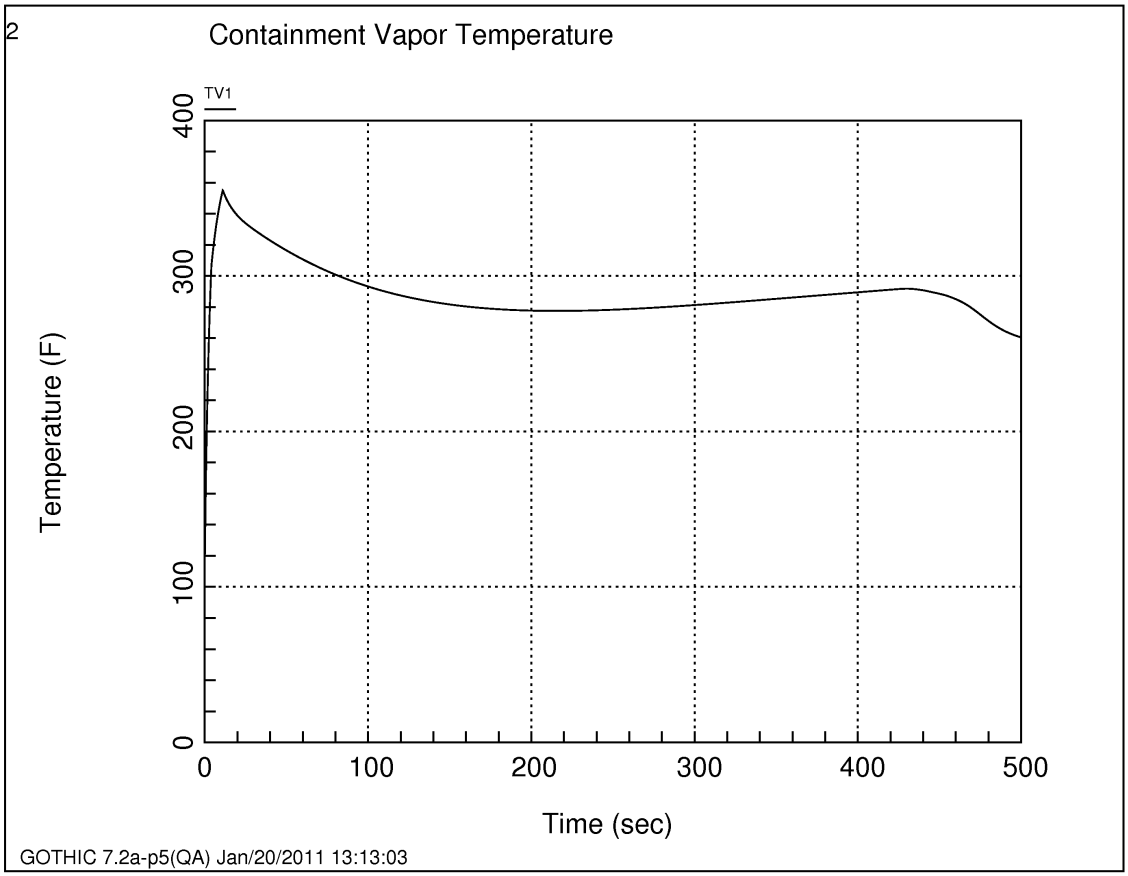

Figure 6.2.1-61 Containment Atmospheric Temperature vs. Time for MSLB Case 8 (Double Ended Break, Reactor Power Level 102%, Loss of Offsite Power)

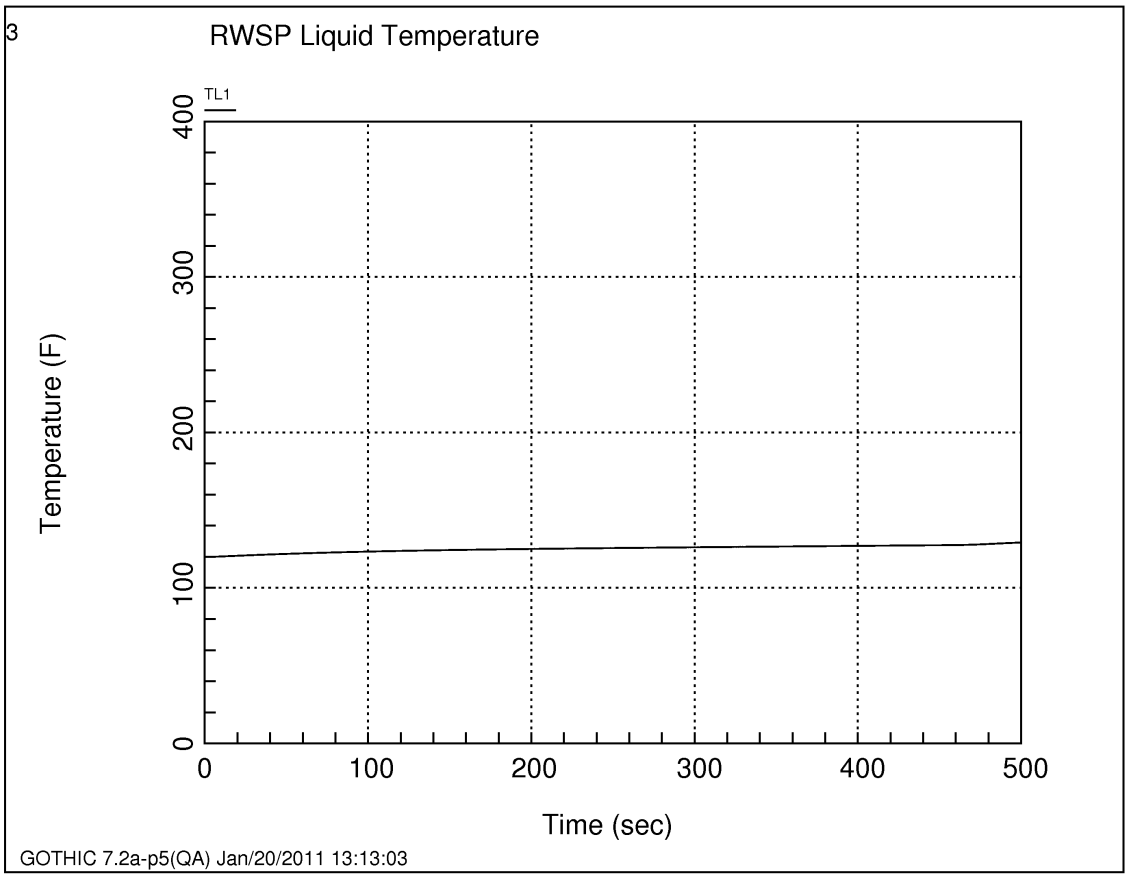

Figure 6.2.1-62 RWSP Water Temperature vs. Time for MSLB Case 8 (Double Ended Break, Reactor Power Level 102%, Loss of Offsite Power)

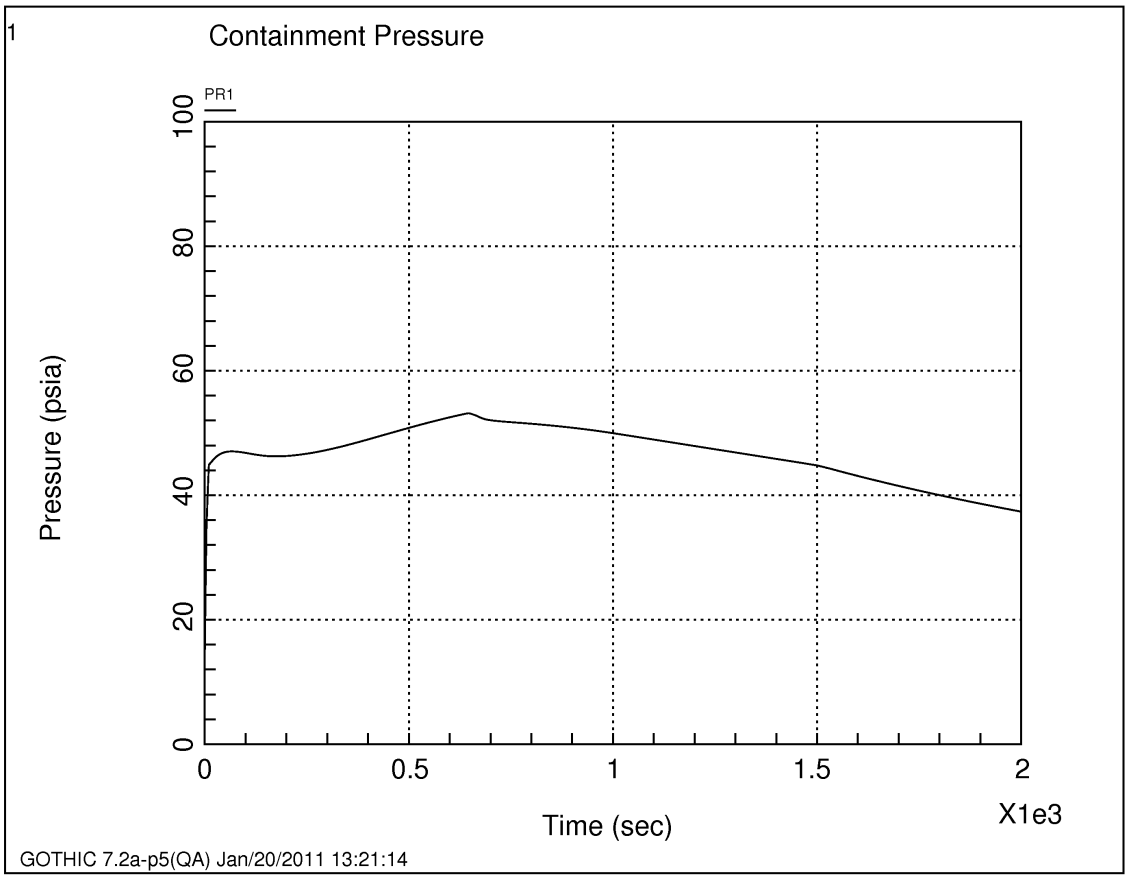

Figure 6.2.1-63 Containment Pressure vs. Time for MSLB Case 9 (Double Ended Break, Reactor Power Level 0%, Loss of Offsite Power)

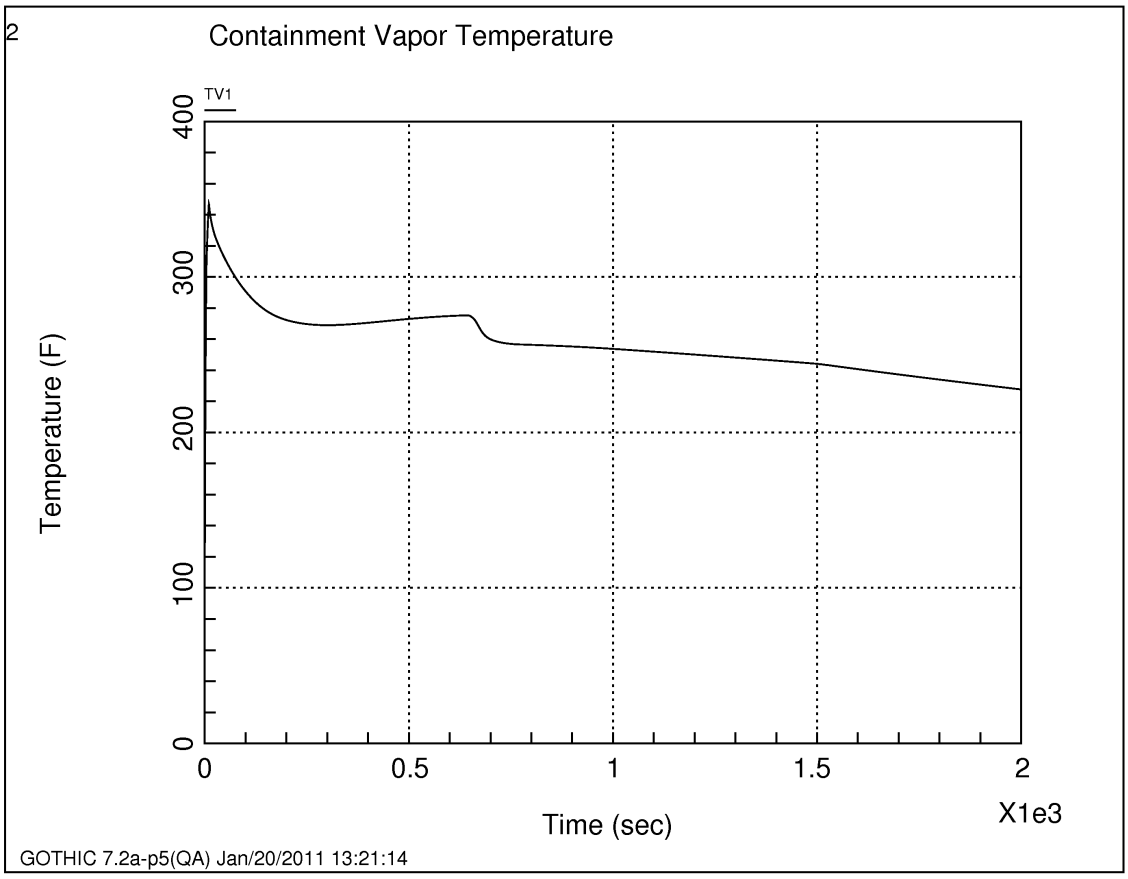

Figure 6.2.1-64 Containment Atmospheric Temperature vs. Time for MSLB Case 9 (Double Ended Break, Reactor Power Level 0%, Loss of Offsite Power)

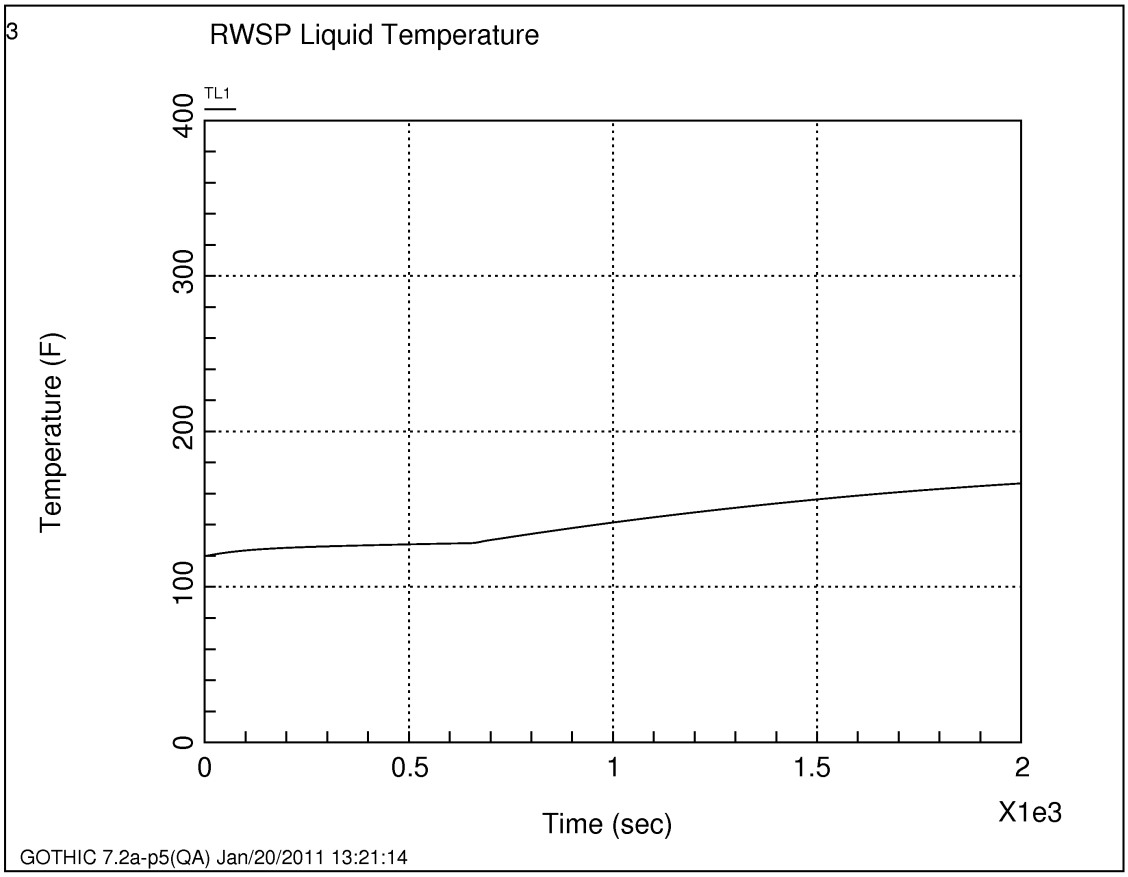

Figure 6.2.1-65 RWSP Water Temperature vs. Time for MSLB Case 9 (Double Ended Break, Reactor Power Level 0%, Loss of Offsite Power)

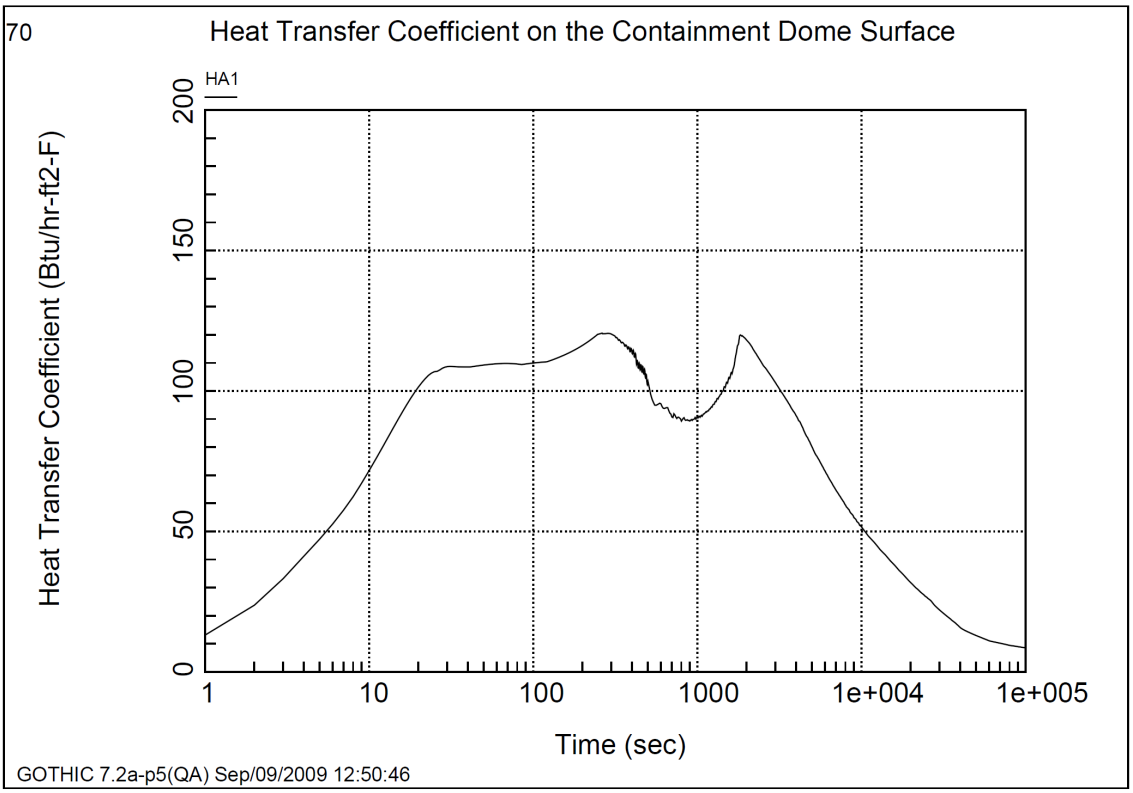

Figure 6.2.1-66 Condensing Heat Transfer Coefficient on the Typical Structure as a Function of Time for the Most Severe DEPSG Break (C_D=1.0)

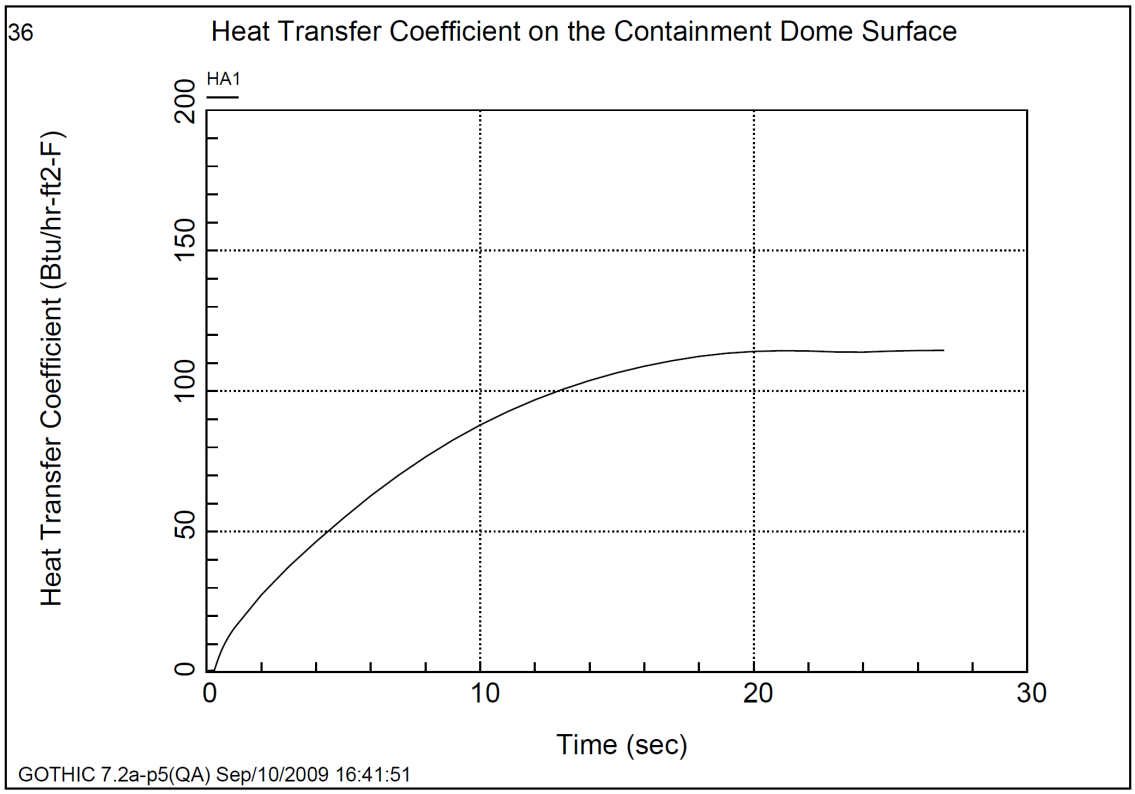

Figure 6.2.1-67 Condensing Heat Transfer Coefficient on the Typical Structure vs. Time for the Most Severe DEHLG Break (C_D=1.0)

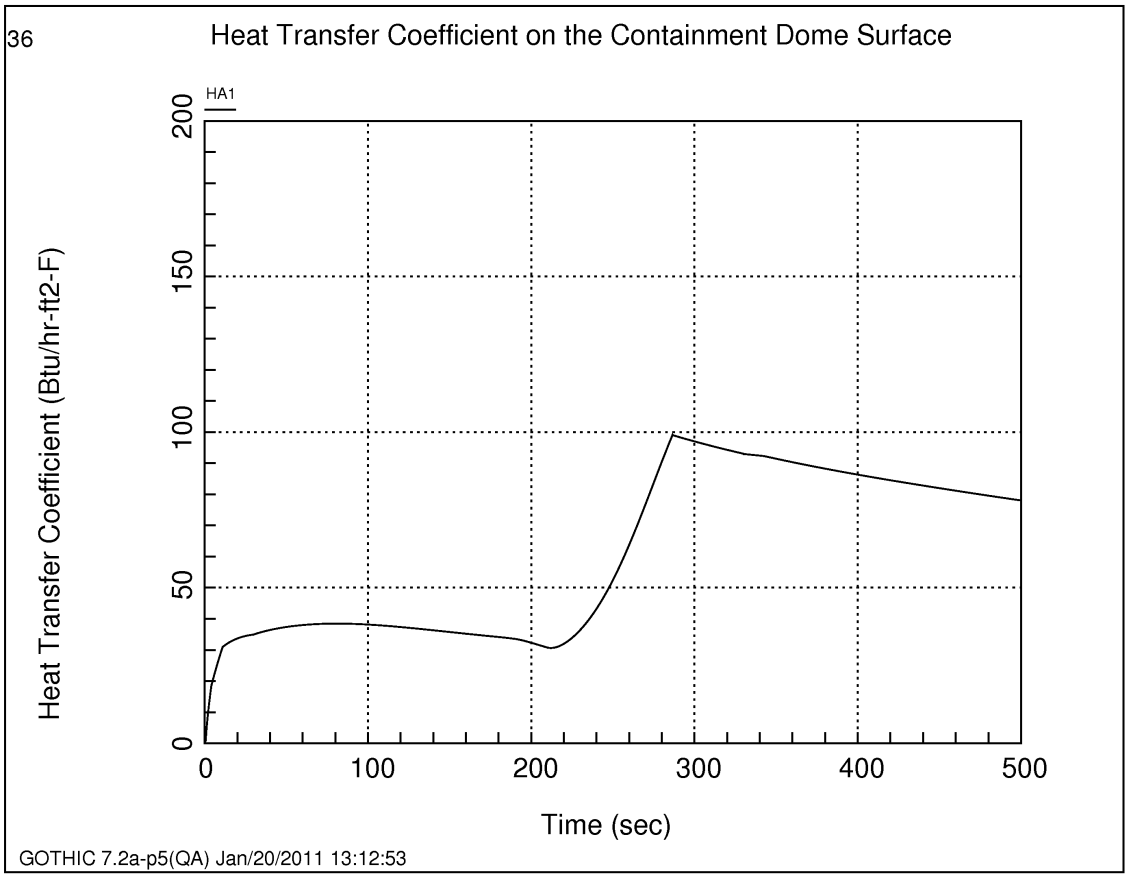

Figure 6.2.1-68 Condensing Heat Transfer Coefficient on the Typical Structure vs. Time for the MSLB case with the Most Severe Average Containment Temperature

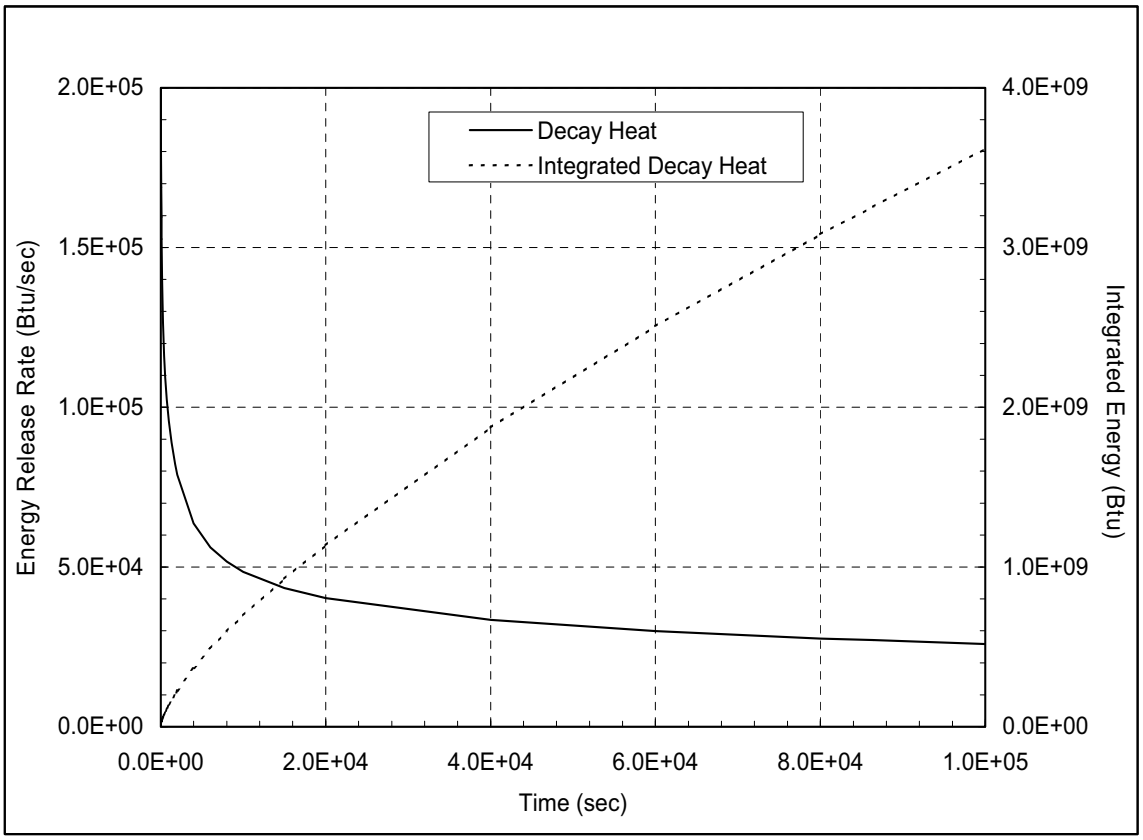

Figure 6.2.1-69 Energy Release Rate and Integrated Energy Released for the Decay Heat

MIC-03-06-00070

Security-Related Information – Withheld Under 10 CFR 2.390

Figure 6.2.1-70 Reactor Cavity Sectional View

MIC-03-06-00070

Security-Related Information – Withheld Under 10 CFR 2.390

Figure 6.2.1-71 Reactor Cavity Plan View

Security-Related Information – Withheld Under 10 CFR 2.390

Figure 6.2.1-72 Steam Generator Subcompartment Sectional View

MIC-03-06-00070

Security-Related Information – Withheld Under 10 CFR 2.390

Figure 6.2.1-73 Steam Generator Subcompartment Plan View

MIC-03-06-00070

Security-Related Information – Withheld Under 10 CFR 2.390

Figure 6.2.1-74 Pressurizer Subcompartment Sectional View

Security-Related Information – Withheld Under 10 CFR 2.390

Figure 6.2.1-75 Pressurizer Subcompartment Plan View

Figure 6.2.1-76 Deleted

Figure 6.2.1-77 Deleted

Security-Related Information – Withheld Under 10 CFR 2.390

Figure 6.2.1-78 Regenerative Heat Exchanger Room Plan View

Security-Related Information – Withheld Under 10 CFR 2.390

Figure 6.2.1-79 Letdown Heat Exchanger Room Plan View

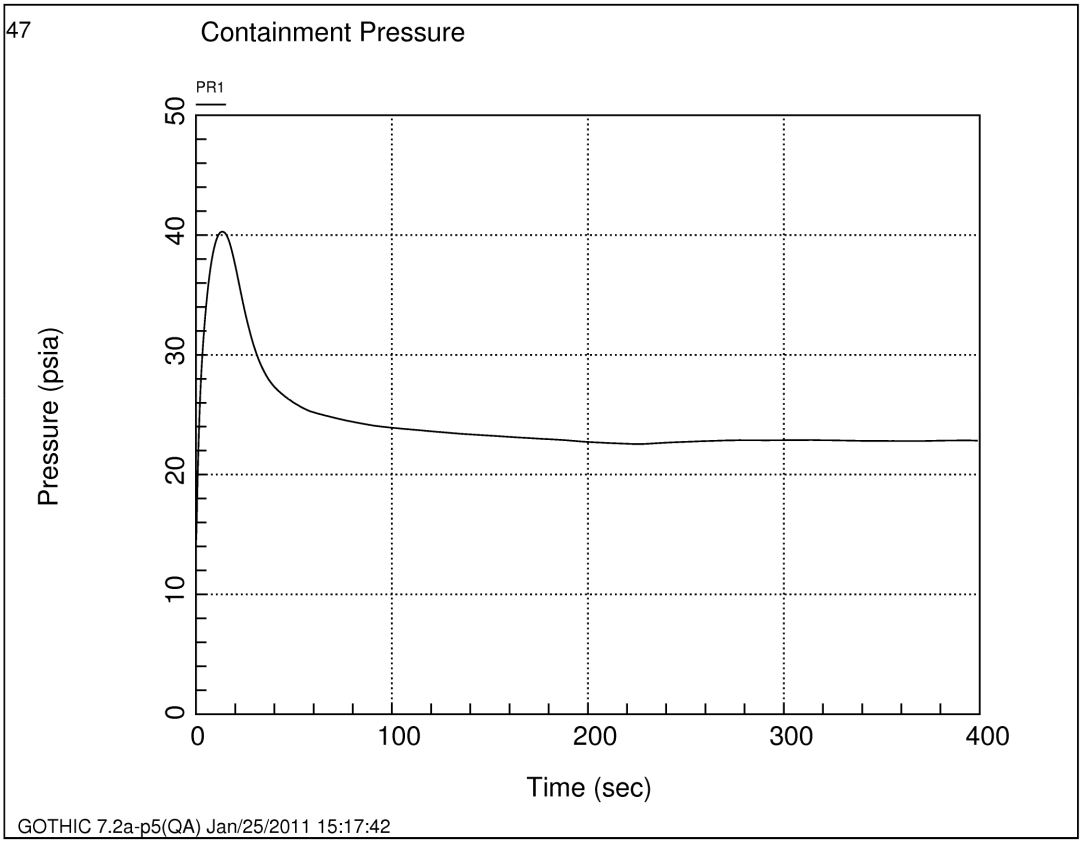

Figure 6.2.1-80 Containment Pressure vs. Time for Postulated RCS DEGB Transient Employed in Minimum Containment Pressure Analyses for ECCS Performance Evaluations

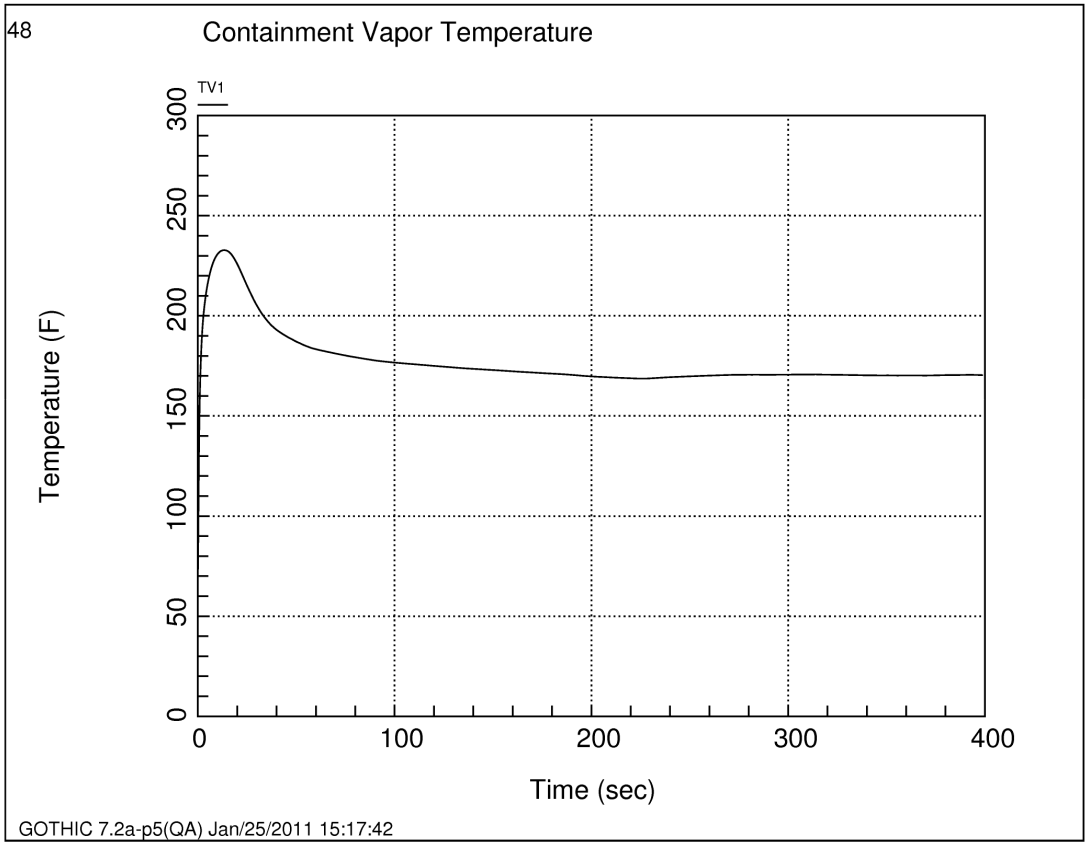

Figure 6.2.1-81 Containment Atmospheric Temperature vs. Time for Postulated RCS DEGB Transient Employed in Minimum Containment Pressure Analyses for ECCS Performance Evaluations

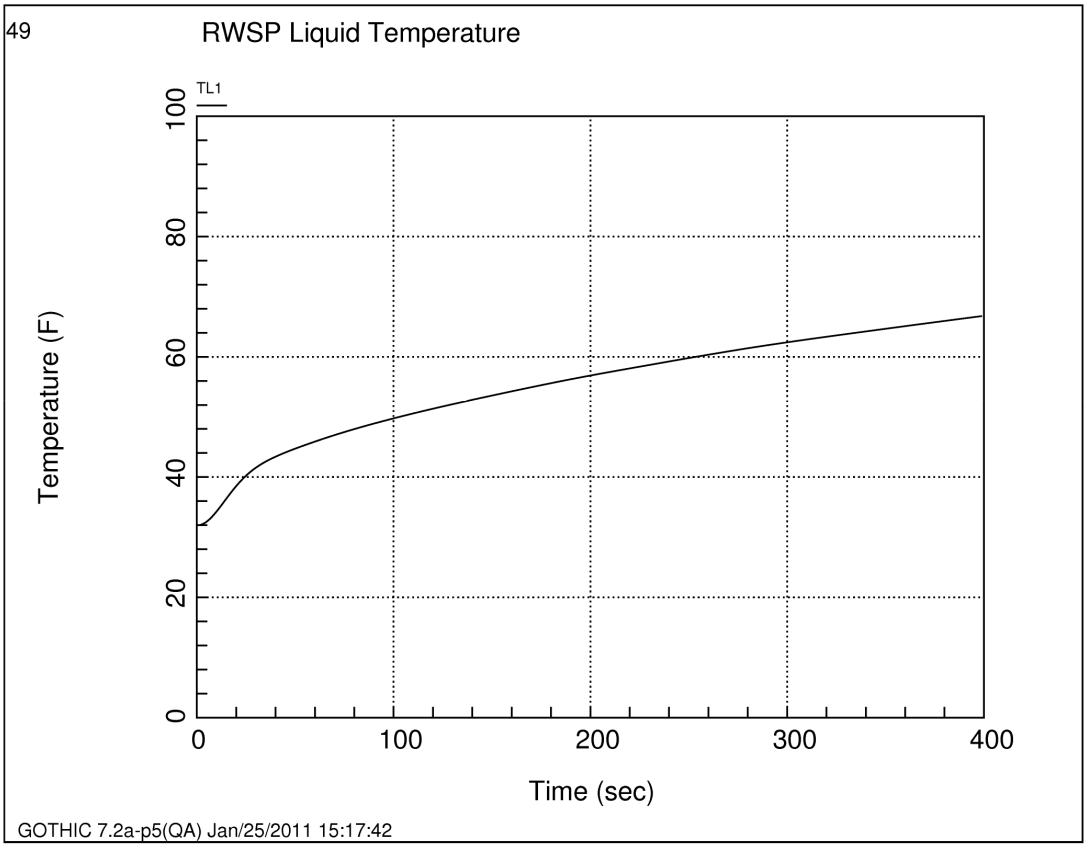

Figure 6.2.1-82 RWSP Water Temperature vs. Time for Postulated RCS DEGB Transient Employed in Minimum Containment Pressure Analyses for ECCS Performance Evaluations

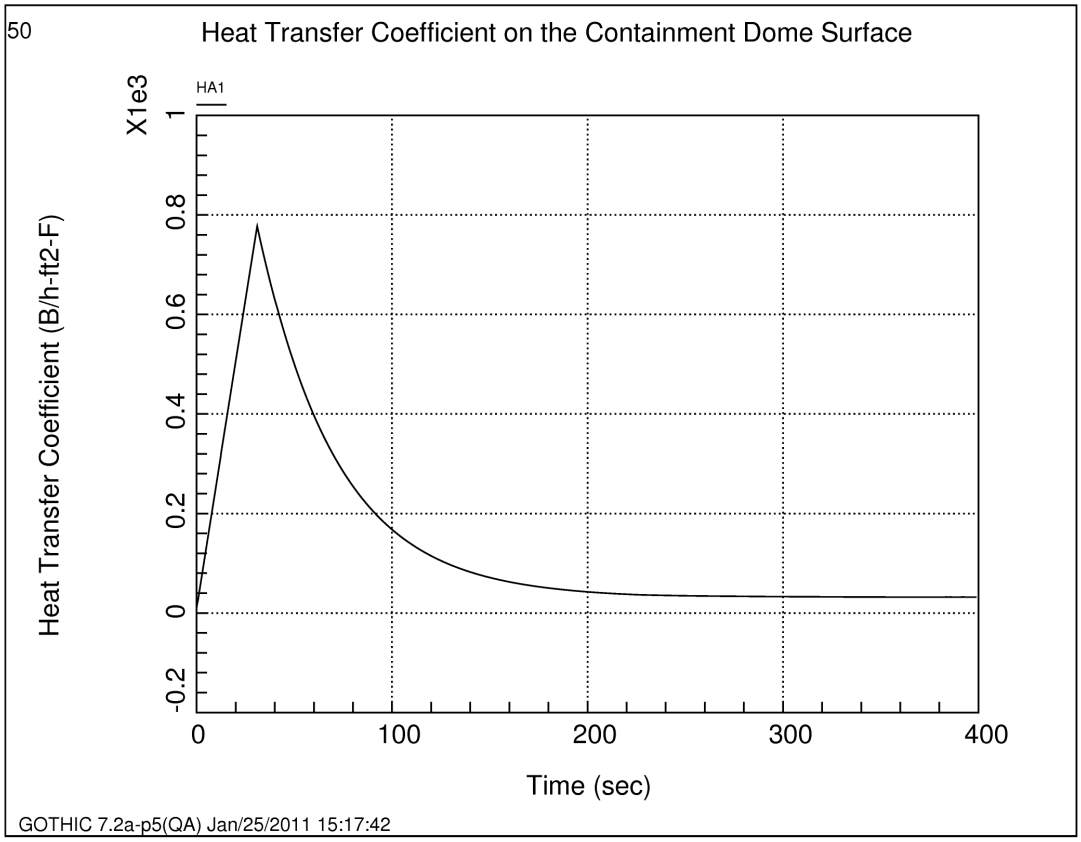

Figure 6.2.1-83 Condensing Heat Transfer Coefficient on the Typical Structure as a Function of Time for Postulated RCS DEGB Transient Employed in Minimum Containment Pressure Analyses

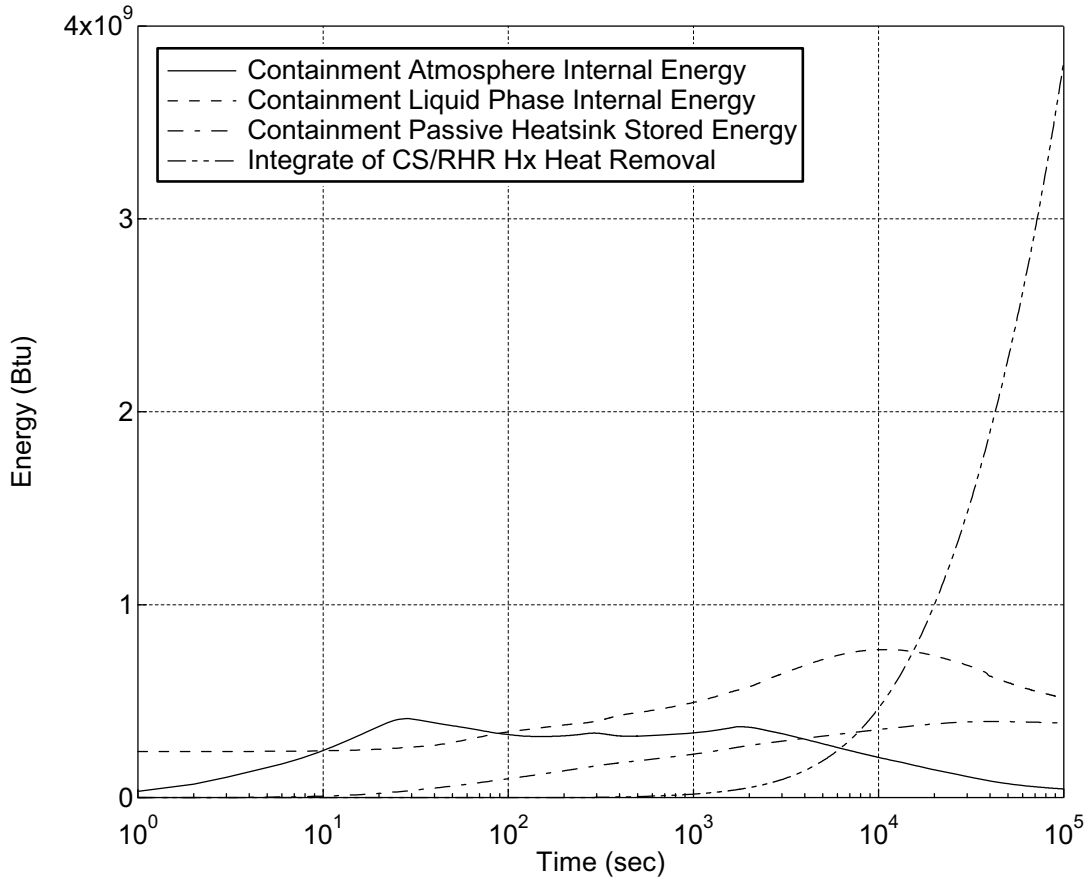

Figure 6.2.1-84 Containment Energy Distribution Transient for DEPSG Break (C_D=1.0)

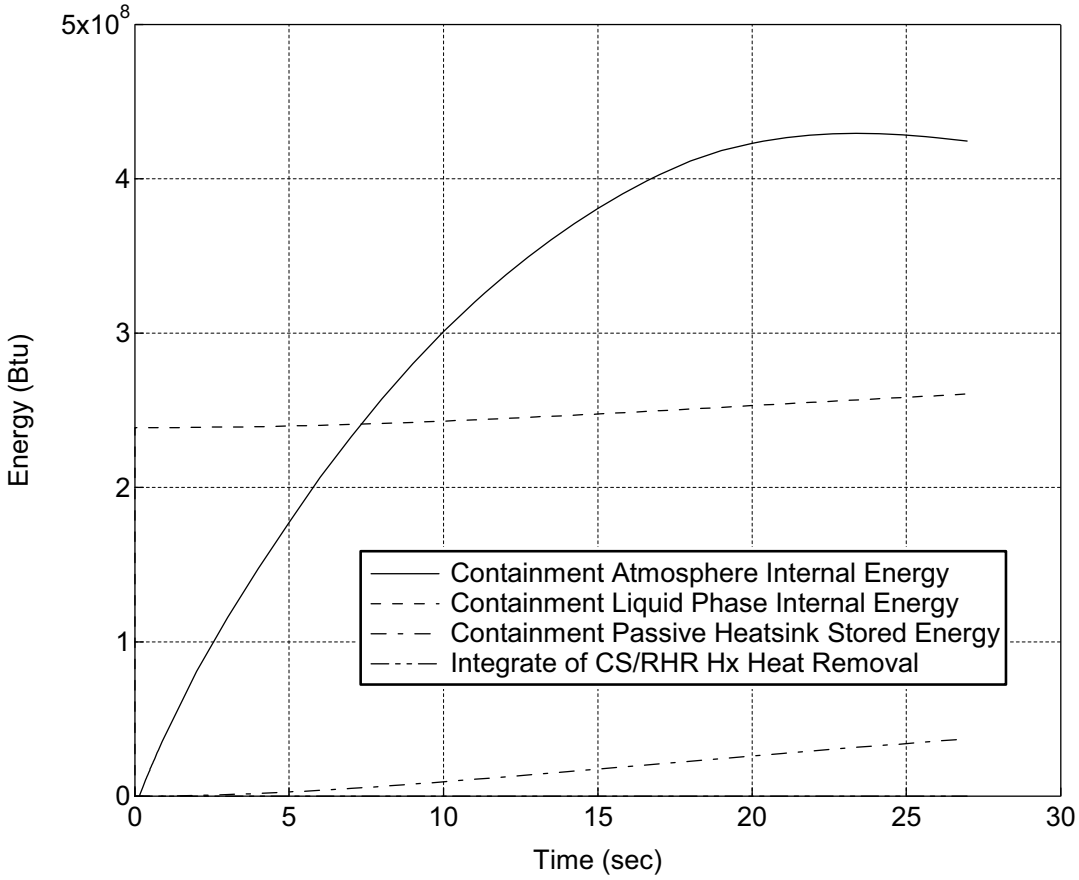

Figure 6.2.1-85 Containment Energy Distribution Transient for DEHLG Break (C_D=1.0)

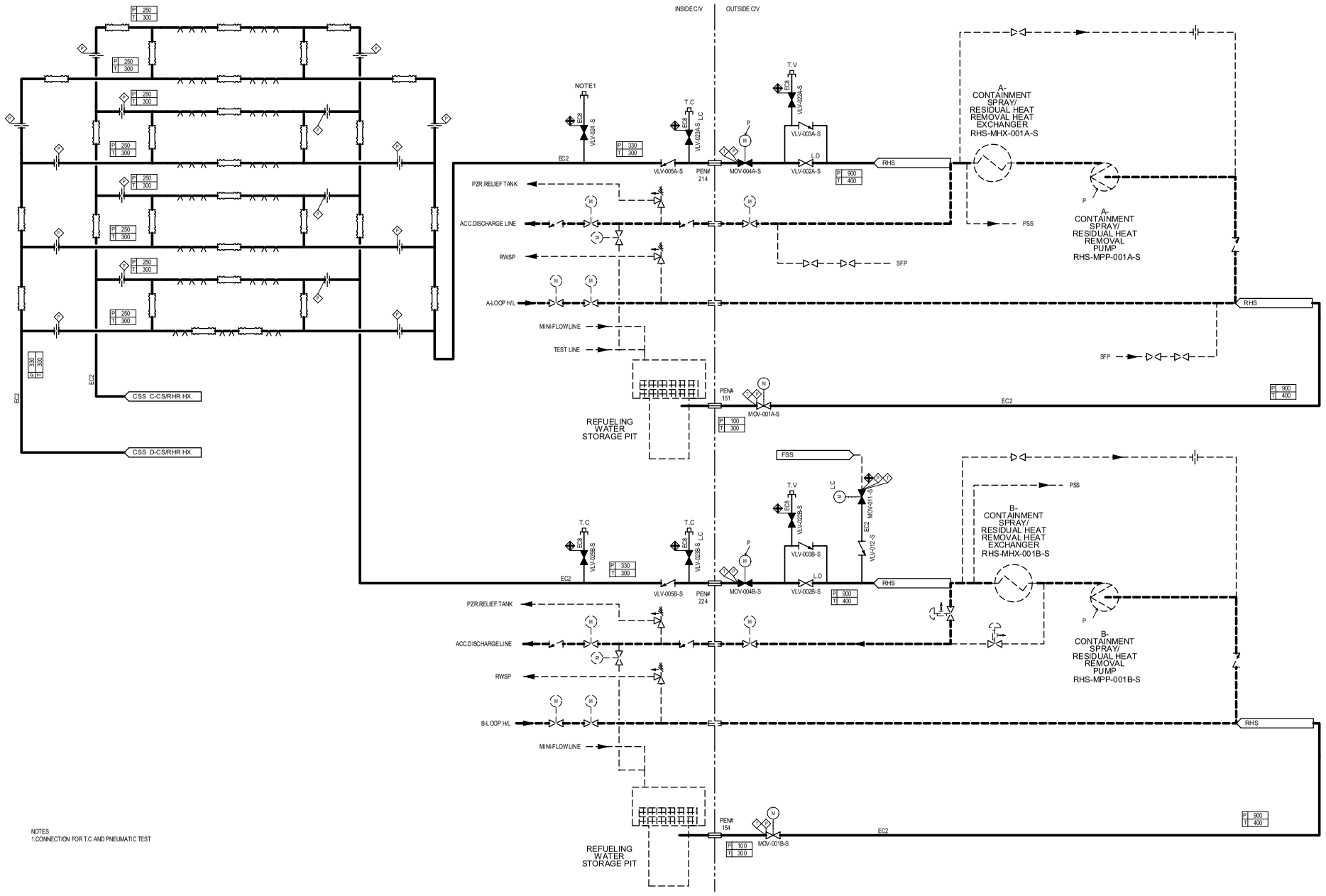

Figure 6.2.2-1 Flow Diagram of the Containment Spray System (Sheet 1 of 2)

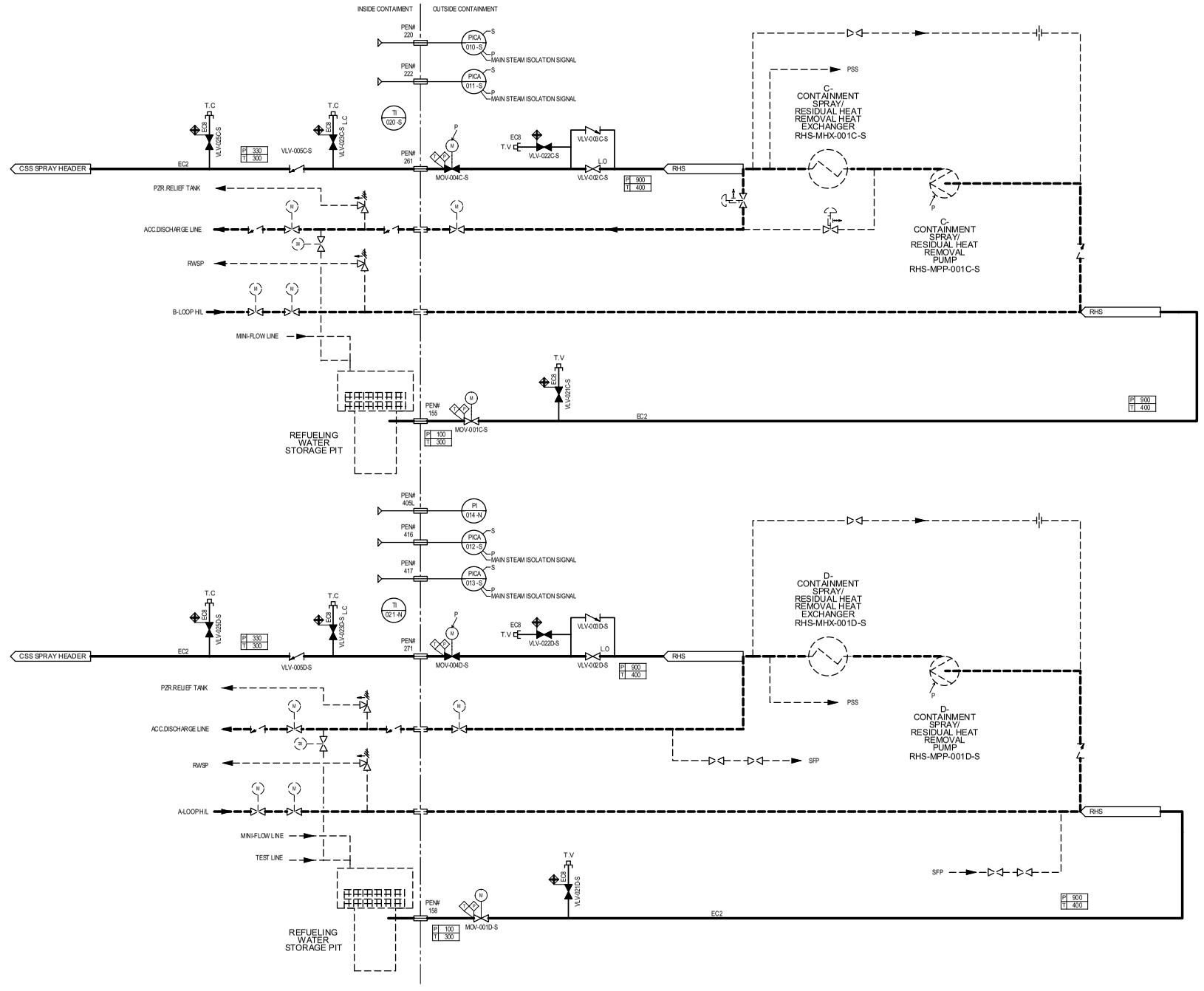

Figure 6.2.2-1 Flow Diagram of the Containment Spray System (Sheet 2 of 2)

HOLLOW CONE NOZZLE

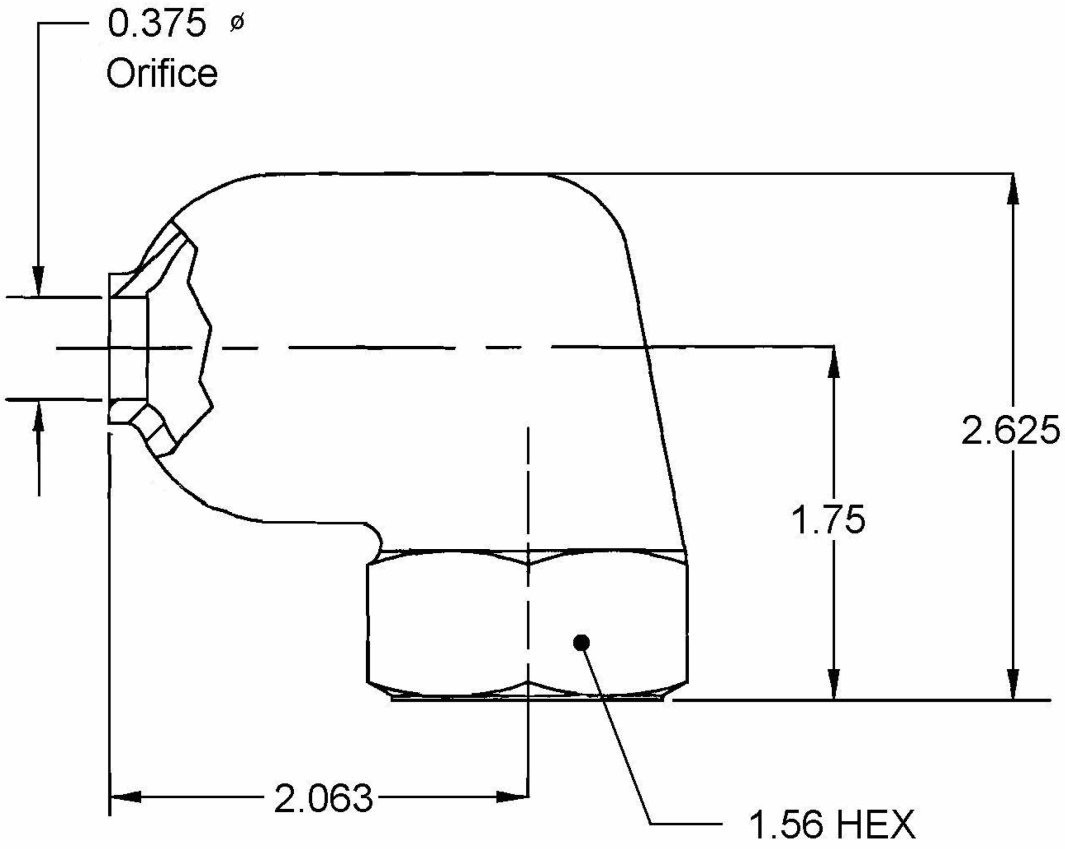

Notes: Dimensions shown are approximate all dimensions are in inches

Figure 6.2.2-2 Containment Spray Nozzle

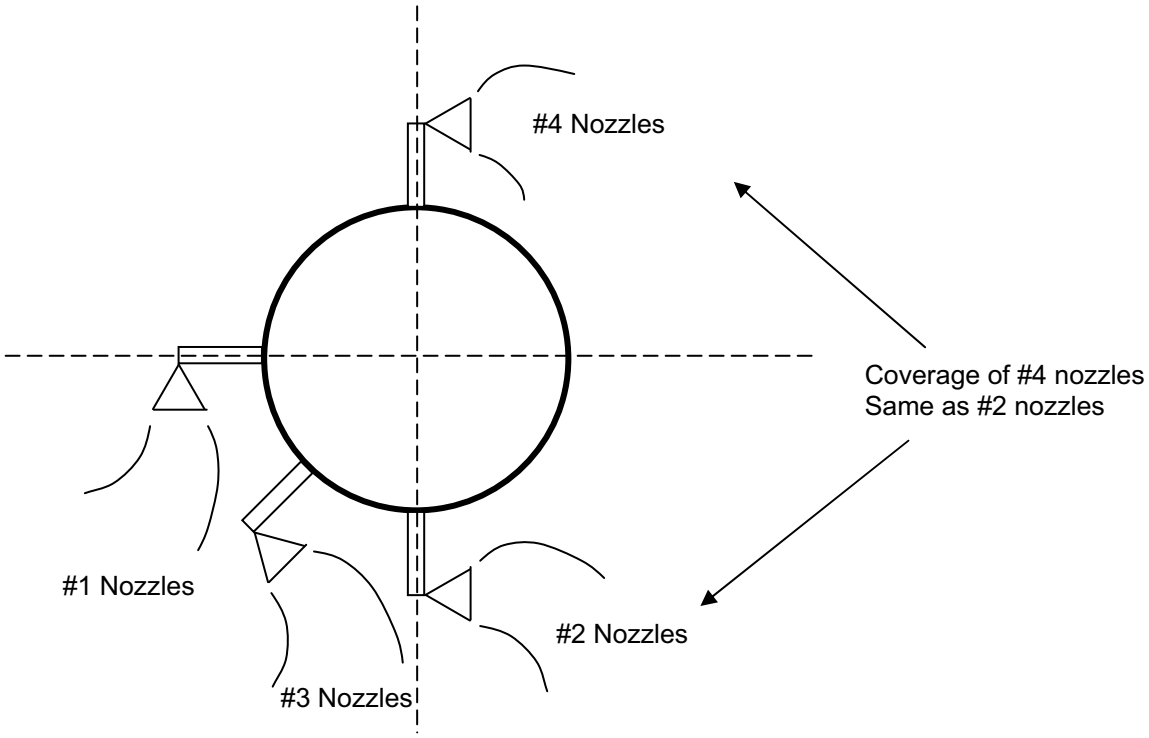

Figure 6.2.2-3 Containment Spray System Nozzle Orientation on Spray Ring

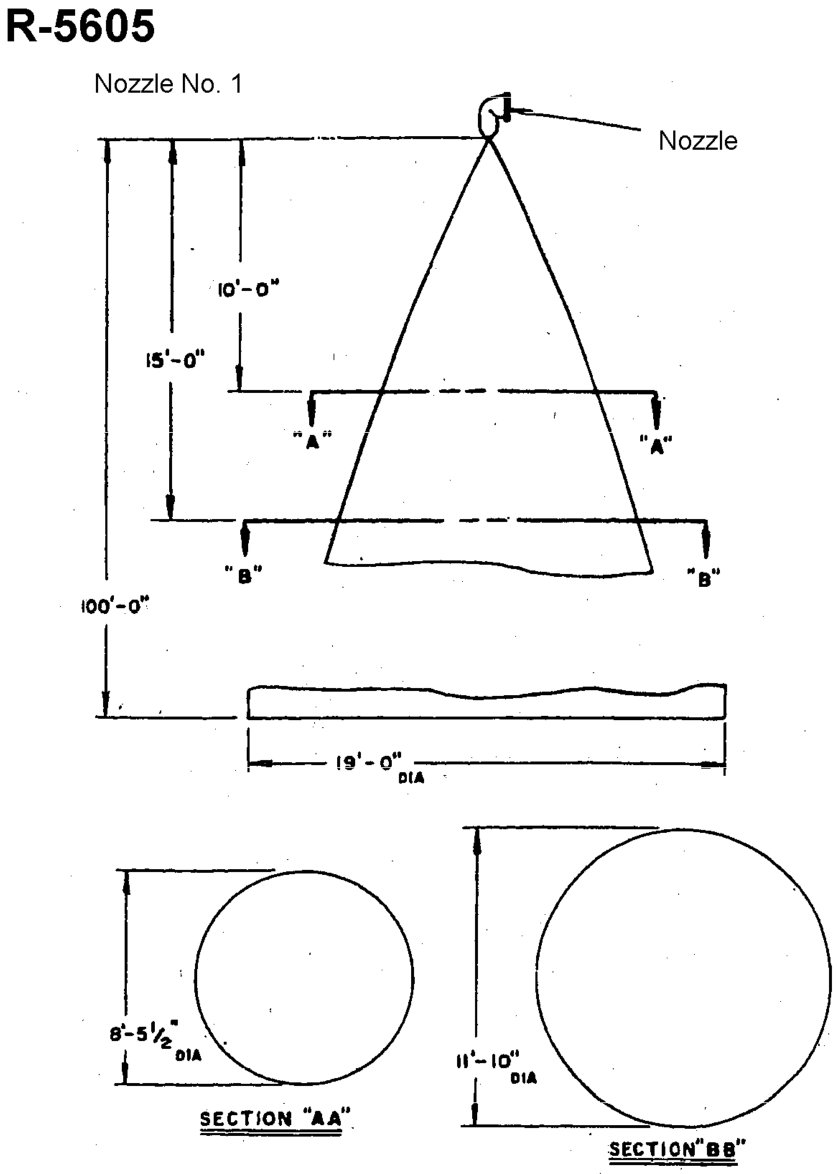

Figure 6.2.2-4 Containment Spray System Nozzle Spray Patterns (Sheet 1 of 3)

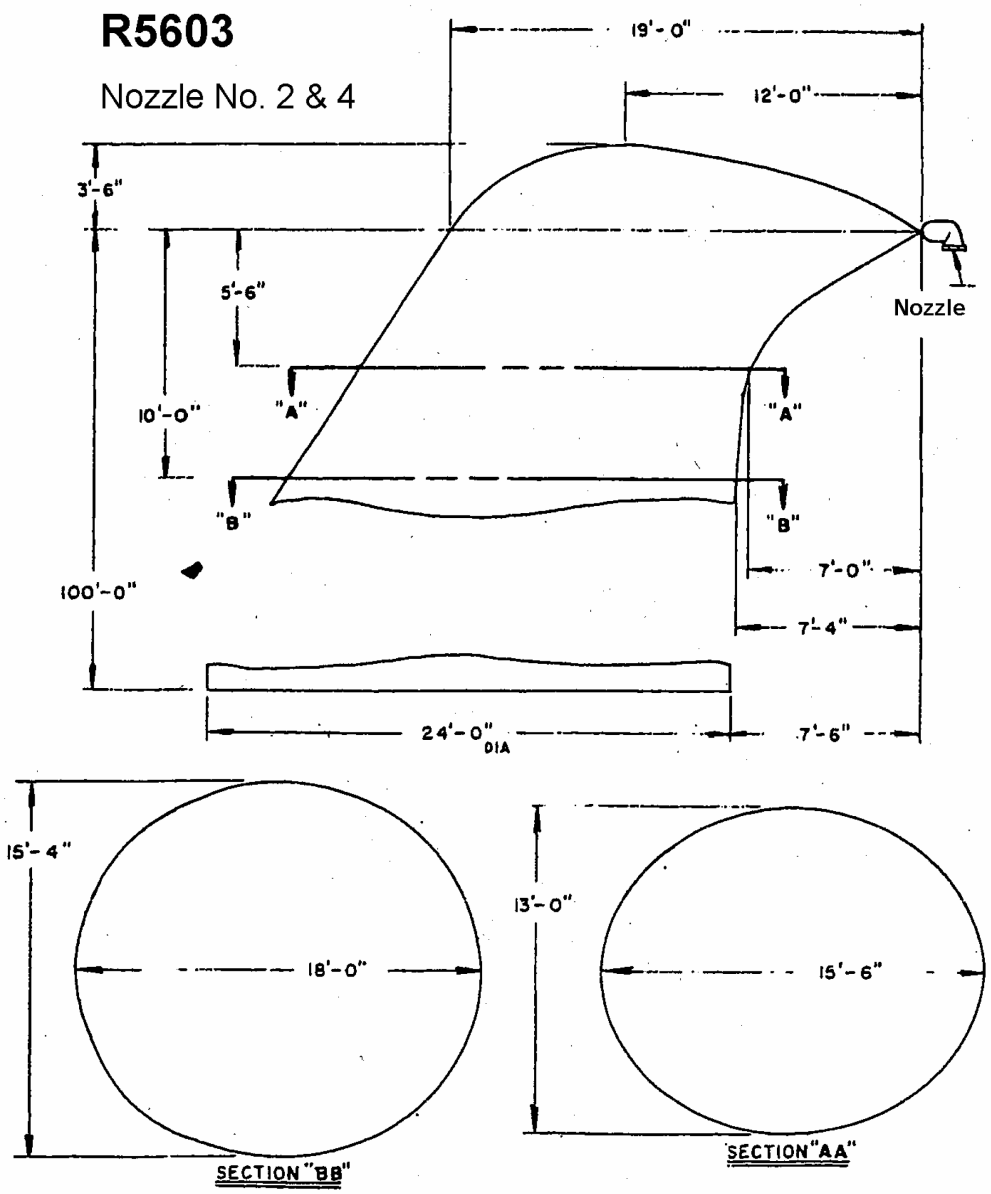

Figure 6.2.2-4 Containment Spray System Nozzle Spray Patterns (Sheet 2 of 3)

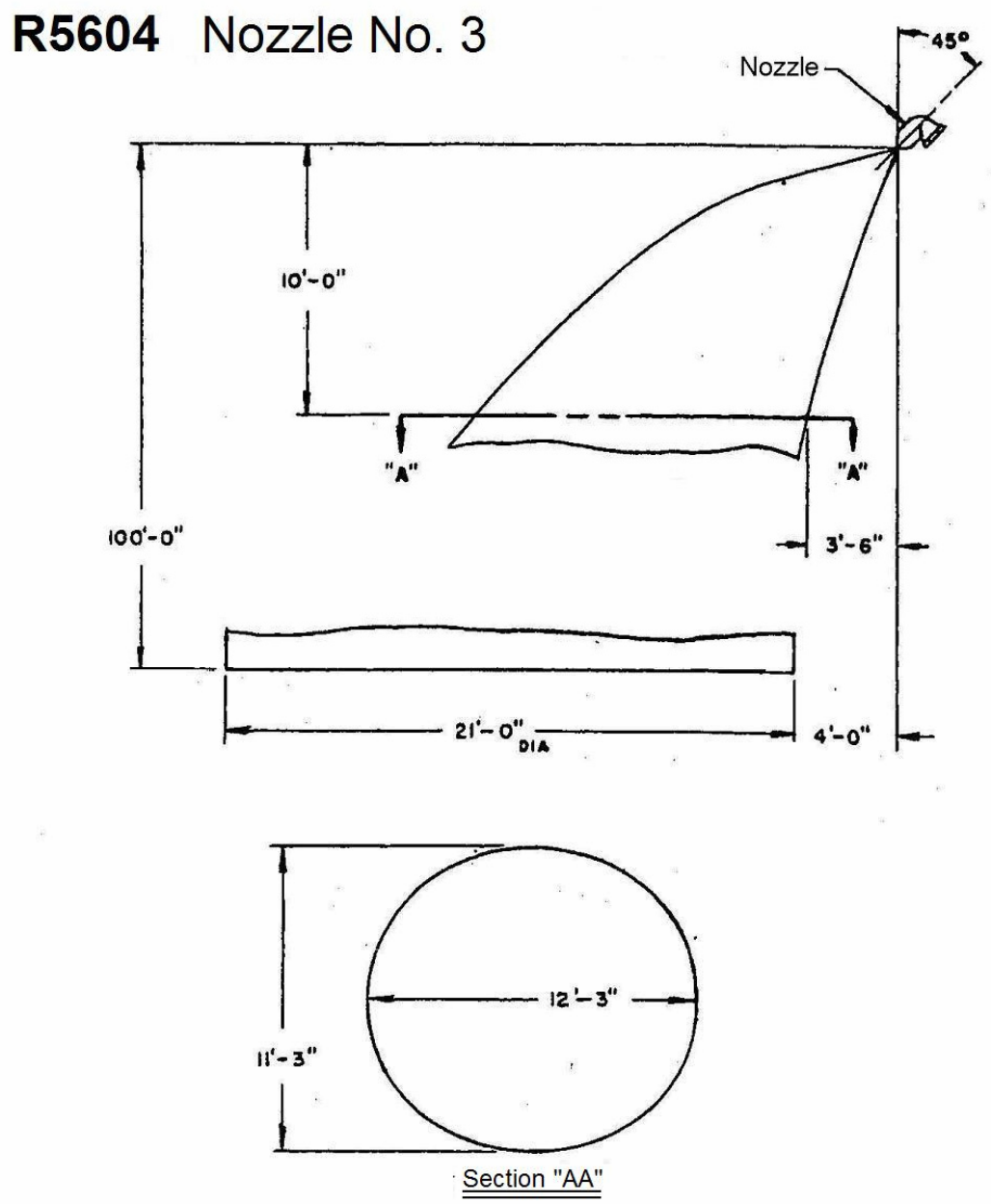

Figure 6.2.2-4 Containment Spray System Nozzle Spray Patterns (Sheet 3 of 3)

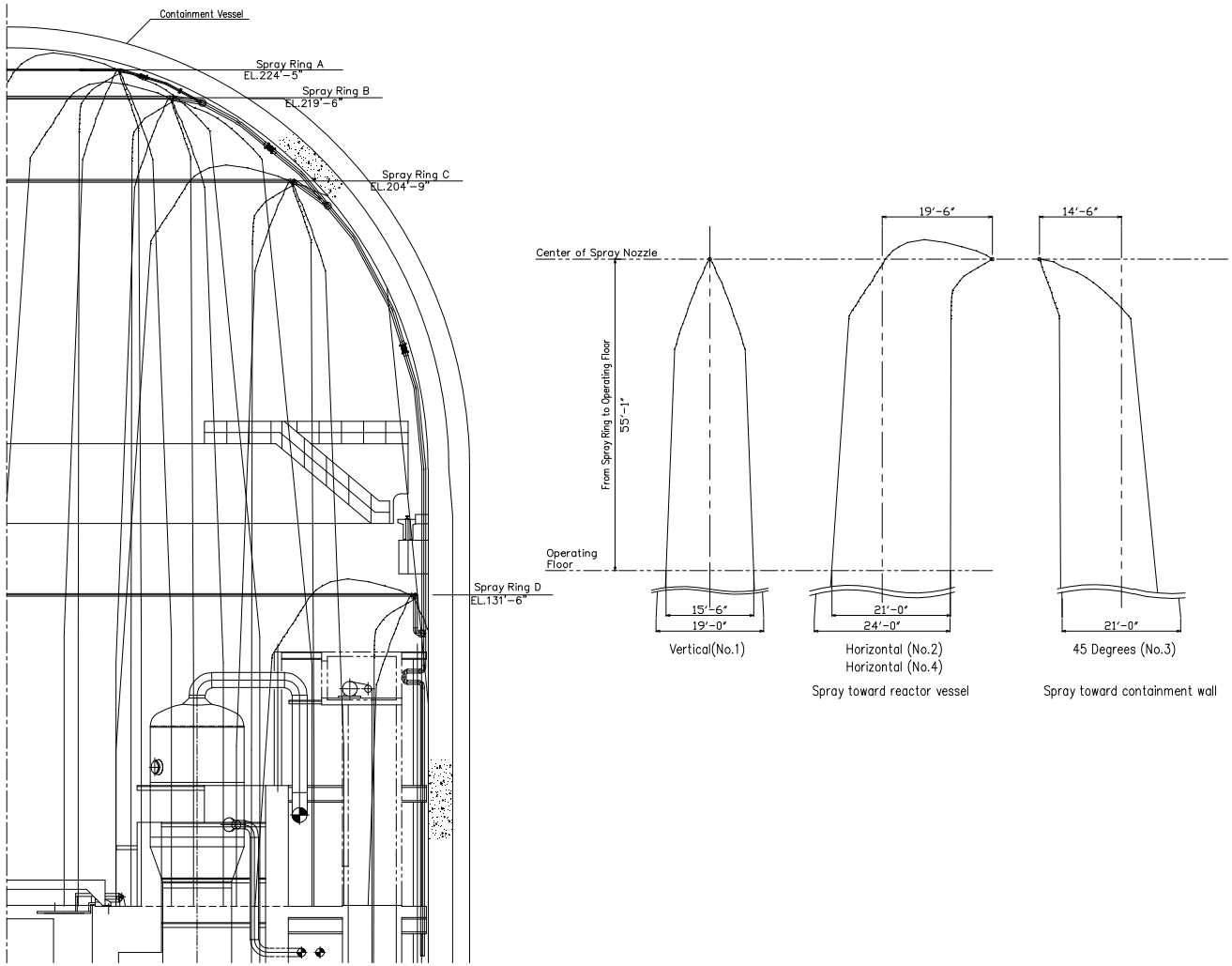

Figure 6.2.2-5 Containment Spray System Spray Ring Elevations

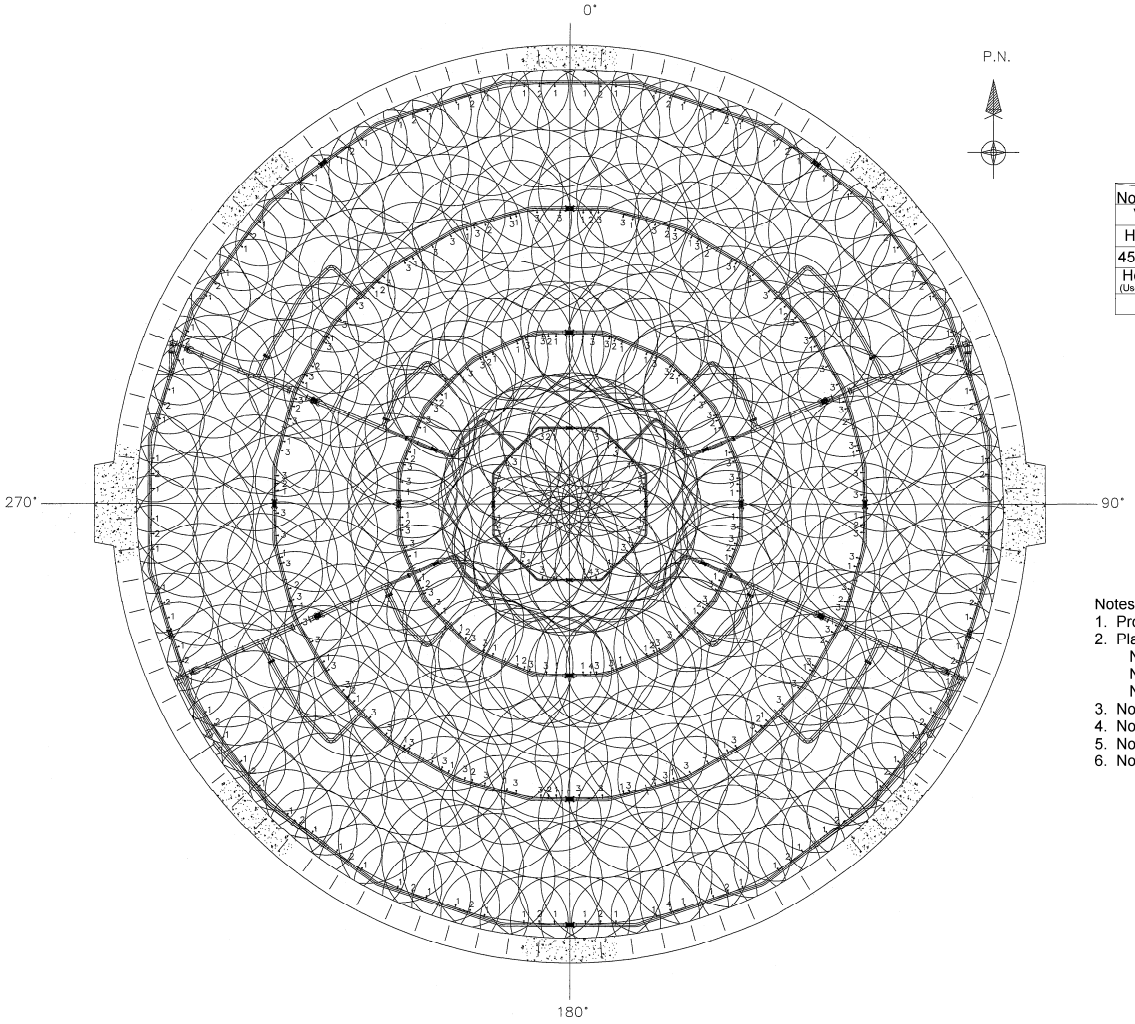

Nozzle \ Ring	Ring A	Ring B	Ring C	Ring D
Vertical (No. 1)	16	32	32	80
Horizontal (No. 2)	3	15	19	39
45 Degrees (No. 3)	12	32	64	None
Horizontal (No. 4) (Used as both spray and vent)	1	1	1	1
Total	32	80	116	120

Total of Spray Nozzle; 348

Notes:
1. Projected spray coverage at the operating floor.
2. Plan of spray coverage adopted and angle is as follows:
   Nozzle No. 1; R-5605
   Nozzle No. 2 and 4; R-5603
   Nozzle No. 3; R-5604
3. No. 2 nozzles spray toward reactor vessel.
4. No. 3 nozzles spray toward containment wall.
5. No. 4 nozzles are used as both spray and vent.
6. No. 1 nozzles sprays vertically down.

Figure 6.2.2-6 Containment Spray System Spray Nozzle Locations and Predicted Coverage on Operating Floor

MIC-03-06-00070

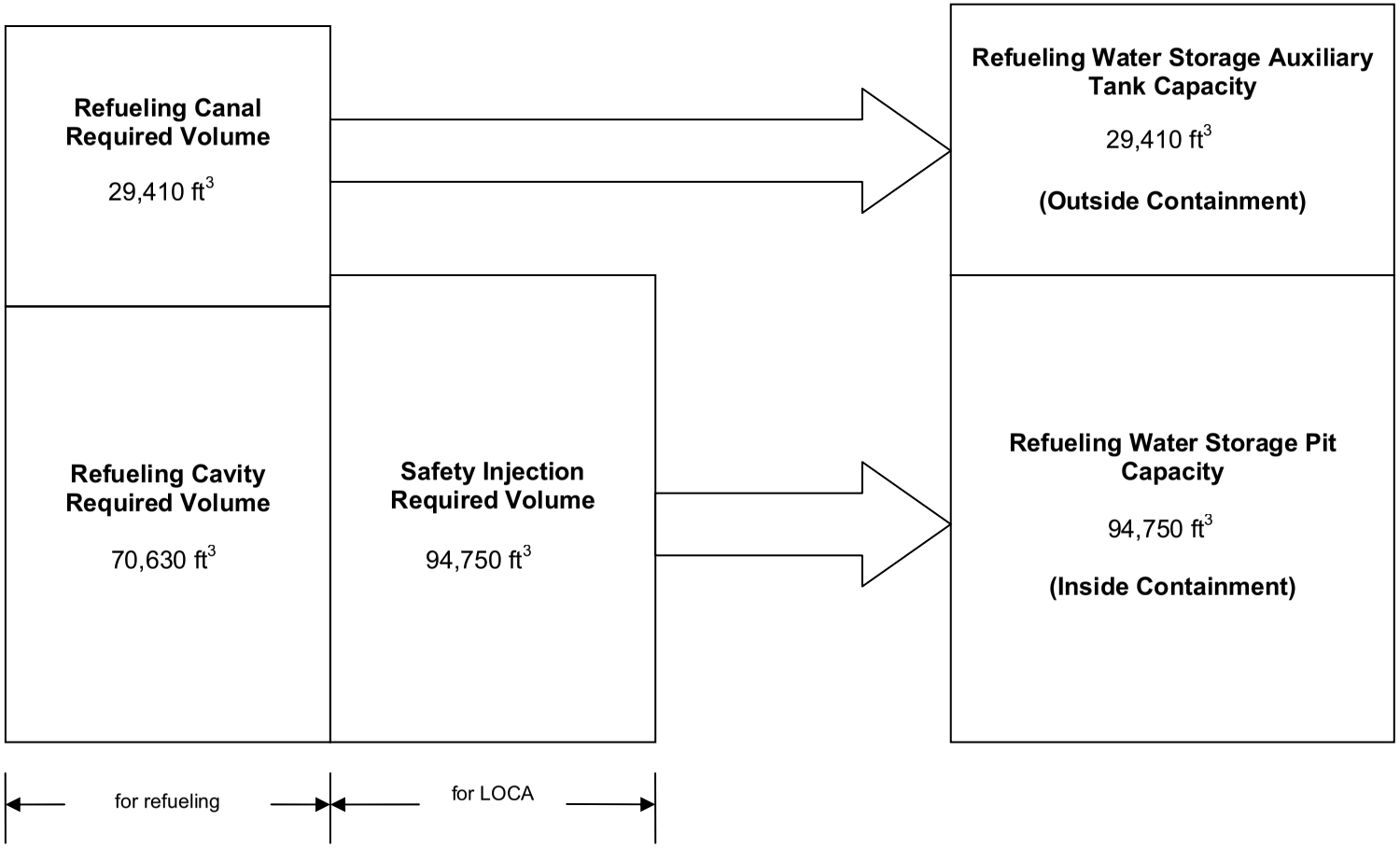

Figure 6.2.2-7 Required Water Volumes vs. Pit Capacities

MIC-03-06-00071

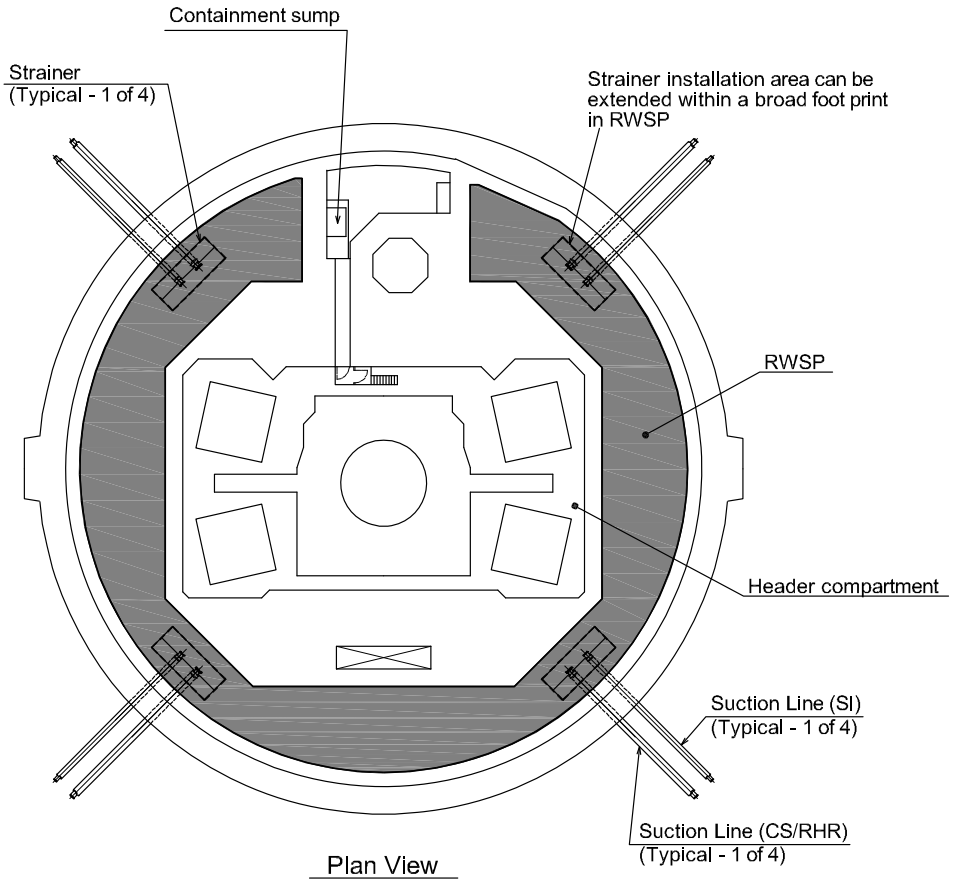

Figure 6.2.2-8 Plan View of RWSP and ECC/CS Strainers

MIC-03-06-00071

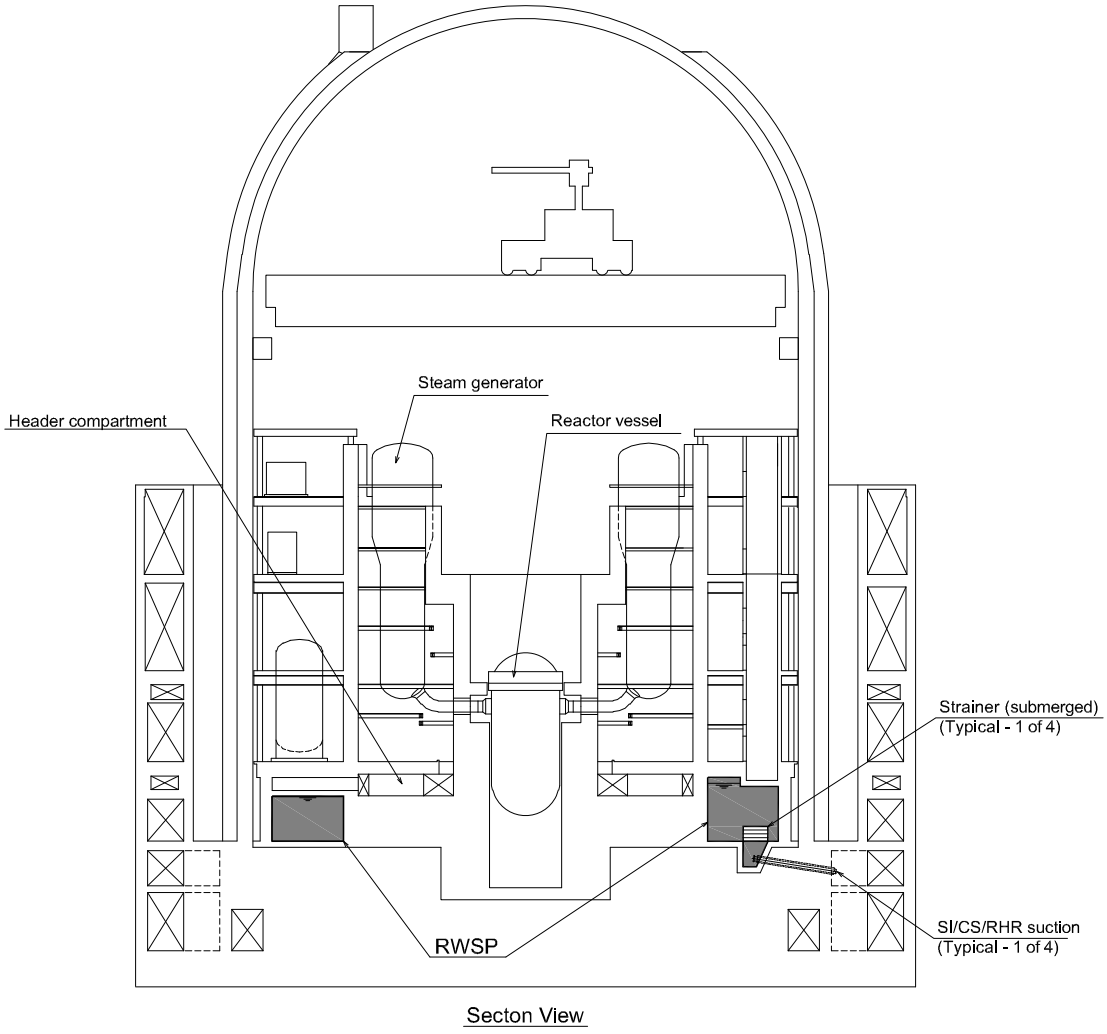

Figure 6.2.2-9 Sectional View of RWSP and ECC/CS Strainers

DCD_05.04.
07-11

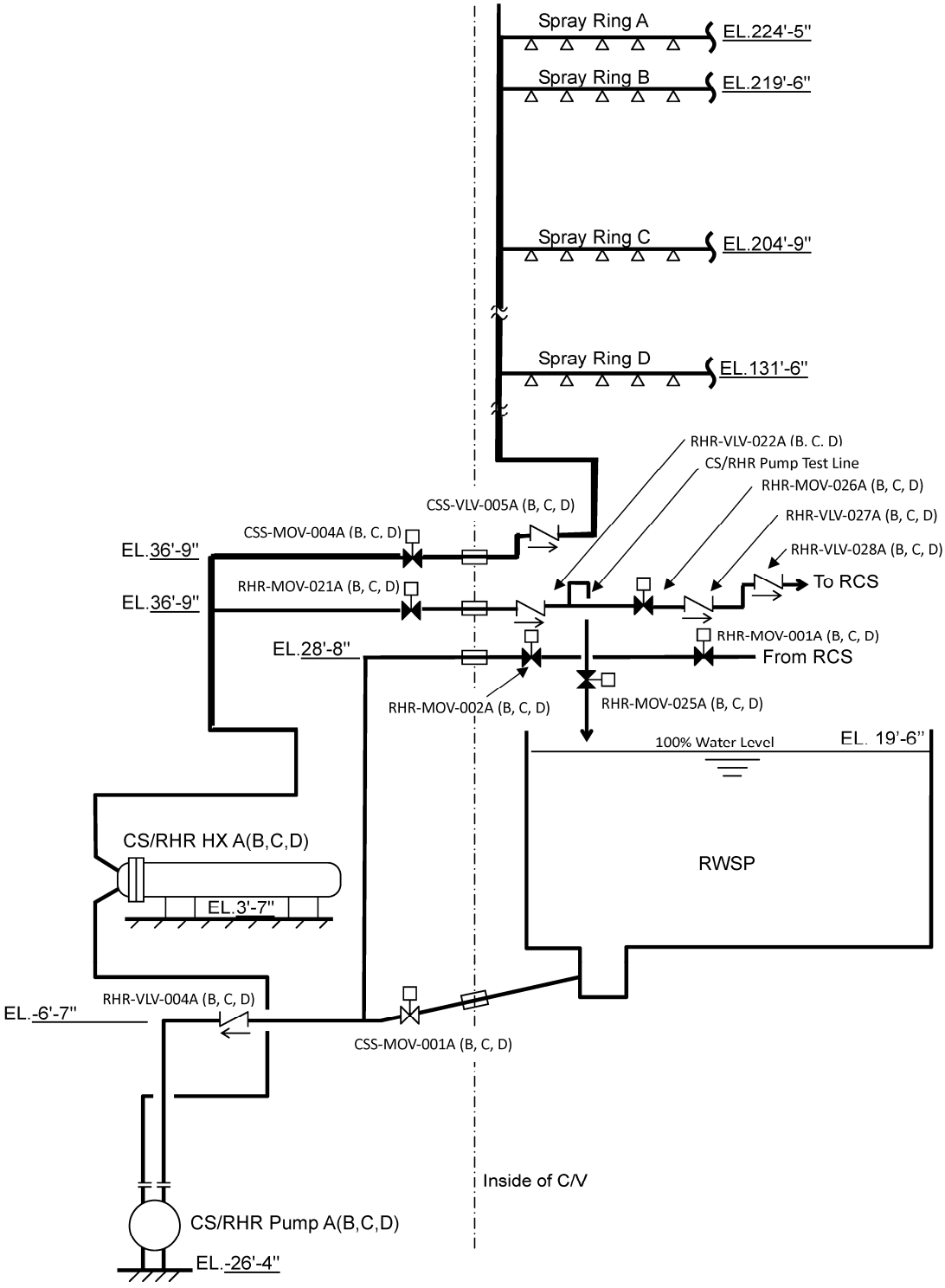

Figure 6.2.2-10 CS/RHR Elevation Diagram

SYMBOLS

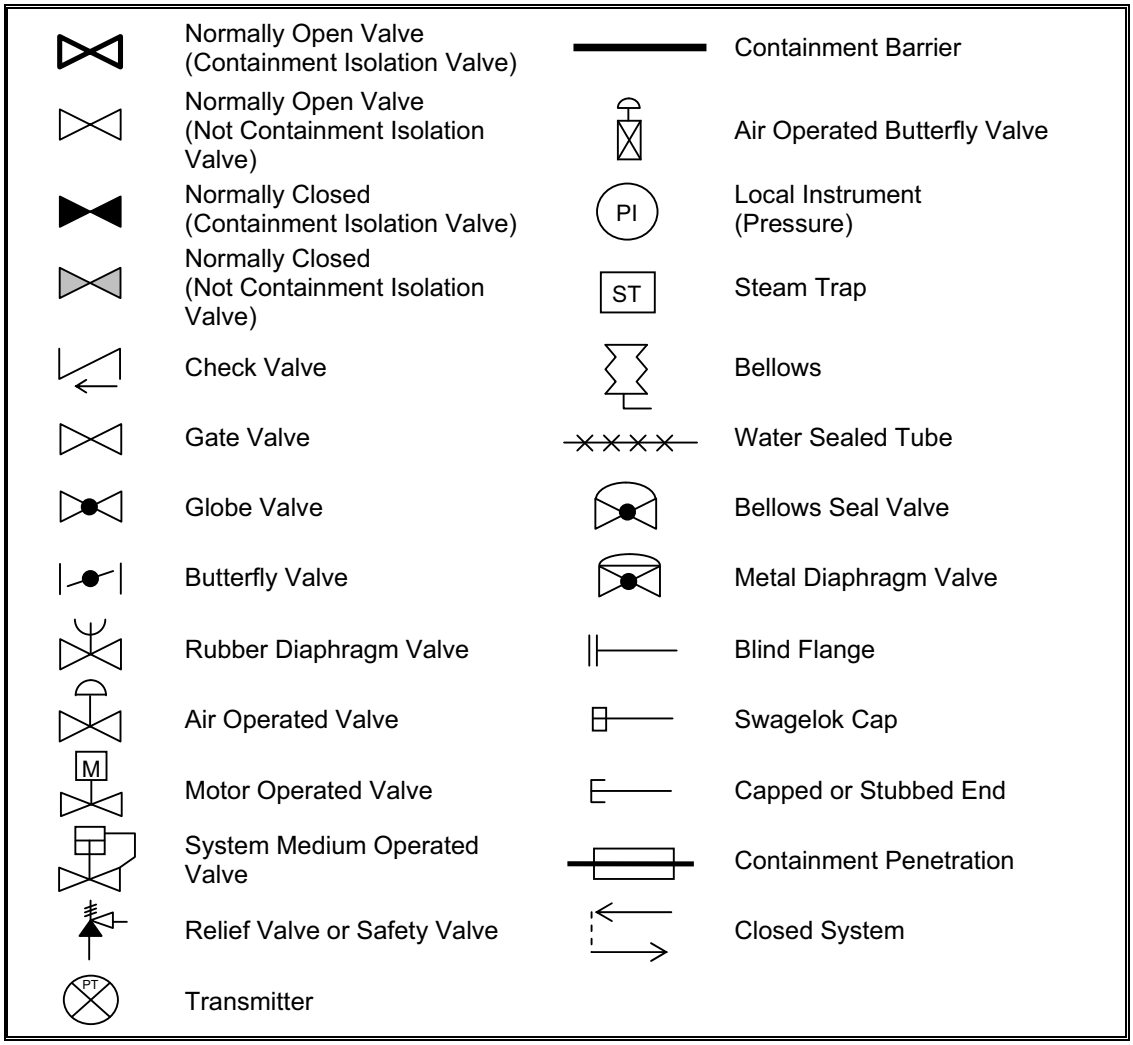

Notes:
Dimensions in inches unless otherwise specified
Motor Operated Valves Fail “As Is”
Air Operated Valves Fail Closed
All line size of test connections and vents are 3/4’’.
Drain connections are omitted in this Figure to simplify the figure, as all systems shown in this Figure are designed to install drain connections to allow fully draining of fluids.

S	Emergency Core Cooling System Actuation Signal	TC	Test Connection
T	Containment Isolation Signal	TV	Test Vent
P	Containment Spray Signal	LC	Locked Closed
V	Containment Ventilation Isolation Signal	FC	Fail Closed
UV	Under Voltage Signal of High Voltage Bus	NC	Normally Closed
RCPS	Reactor Control and Protection System	N2	Nitrogen Gas
RM	Remote Manual	WHT	Waste Holdup Tank

Figure 6.2.4-1 Containment Isolation Configurations (Sheet 1 of 52)

Reactor Coolant System

N2 Supply Line to Pressurizer Relief Tank

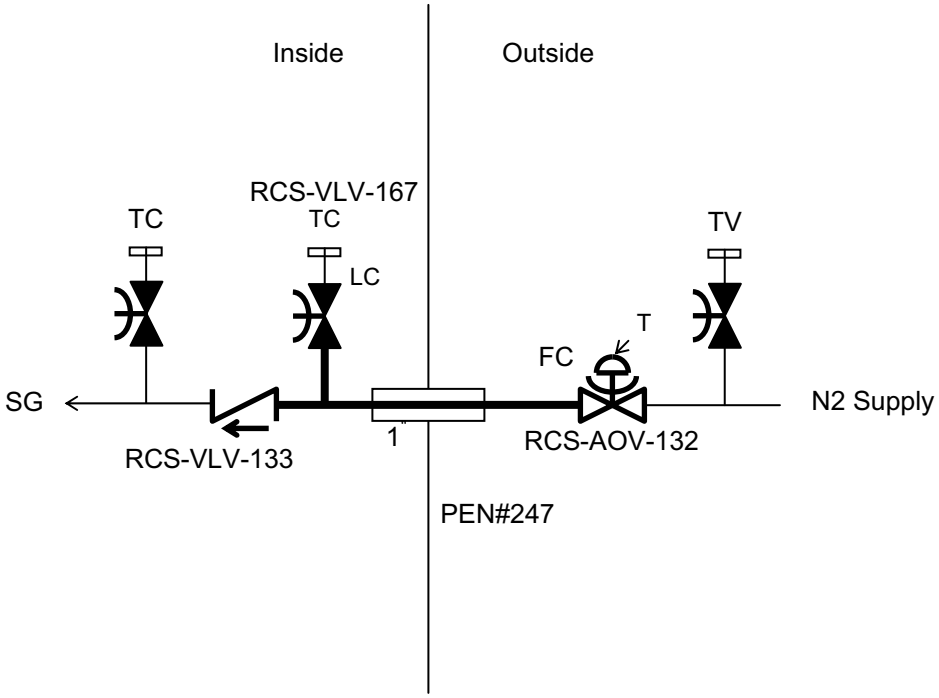

Figure 6.2.4-1 Containment Isolation Configurations (Sheet 2 of 52)

Reactor Coolant System

Primary Makeup Water Supply Line to Pressurizer Relief Tank

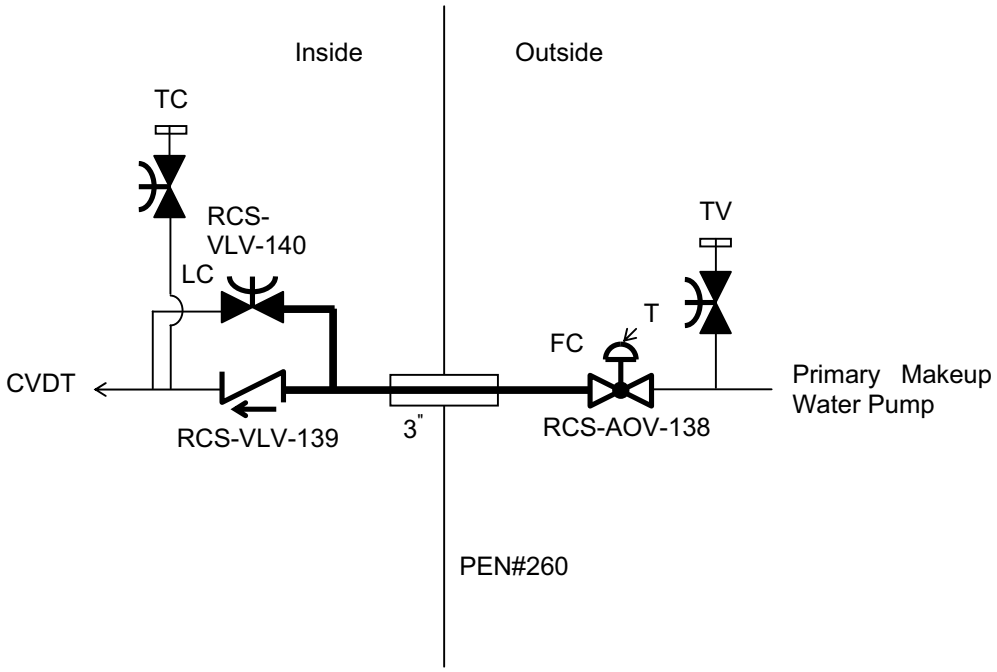

Figure 6.2.4-1 Containment Isolation Configurations (Sheet 3 of 52)

Reactor Coolant System

Pressurizer Relief Tank Gas Analyzer Line

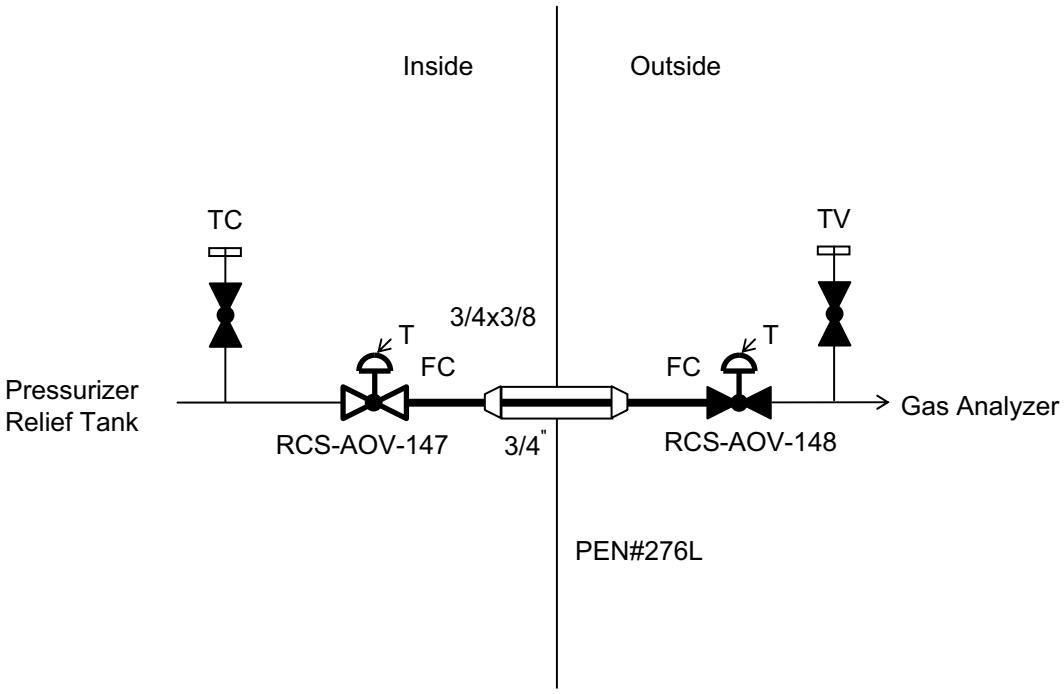

Figure 6.2.4-1 Containment Isolation Configurations (Sheet 4 of 52)

Chemical and Volume Control System

Letdown Line

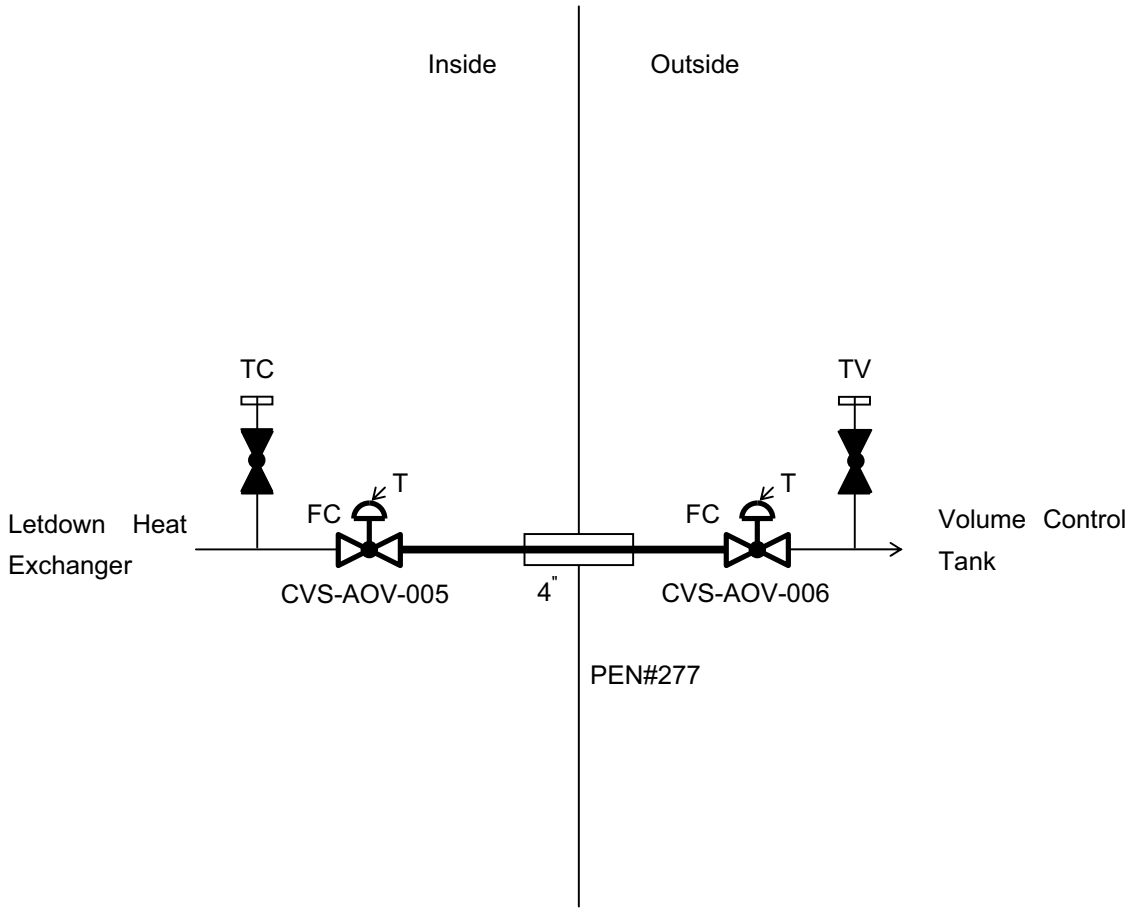

Figure 6.2.4-1 Containment Isolation Configurations (Sheet 5 of 52)

Chemical and Volume Control System

Charging Line

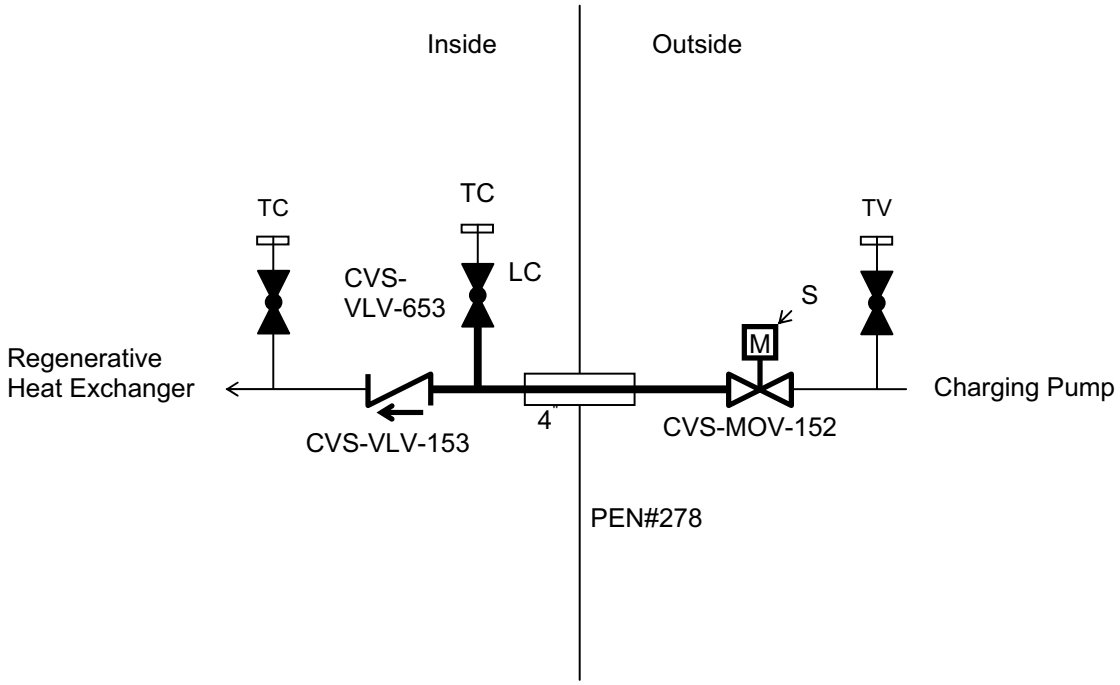

Figure 6.2.4-1 Containment Isolation Configurations (Sheet 6 of 52)

Chemical and Volume Control System

Seal Injection Line for Reactor Coolant Pump

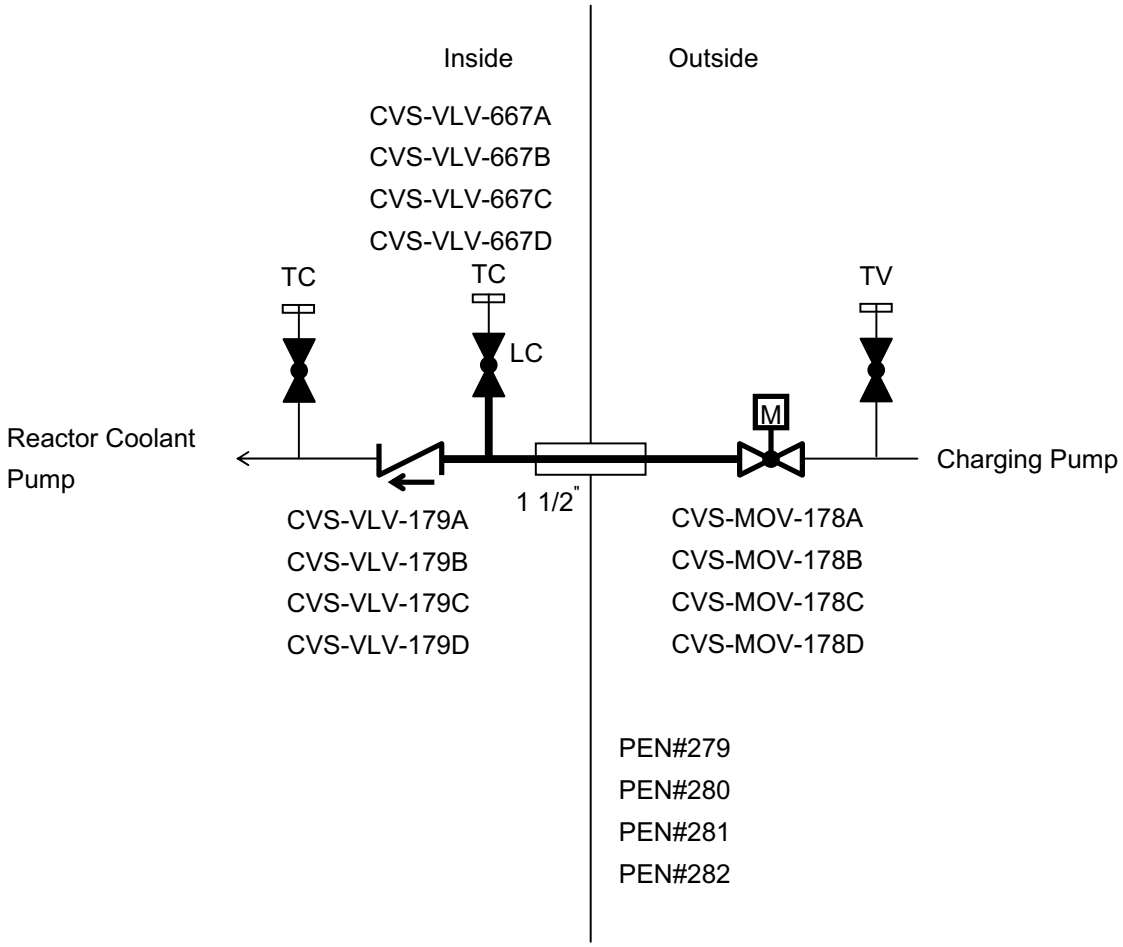

Figure 6.2.4-1 Containment Isolation Configurations (Sheet 7 of 52)

Chemical and Volume Control System

Seal Water Return Line

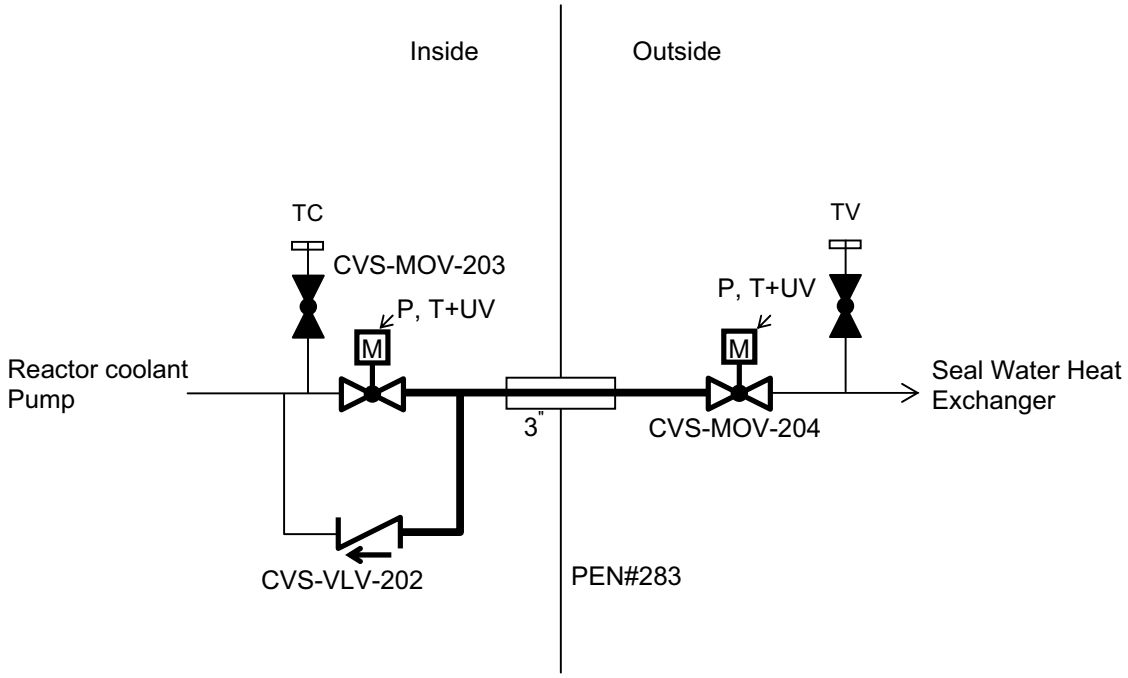

Figure 6.2.4-1 Containment Isolation Configurations (Sheet 8 of 52)

Safety Injection System

N2 Supply Line to Accumulators

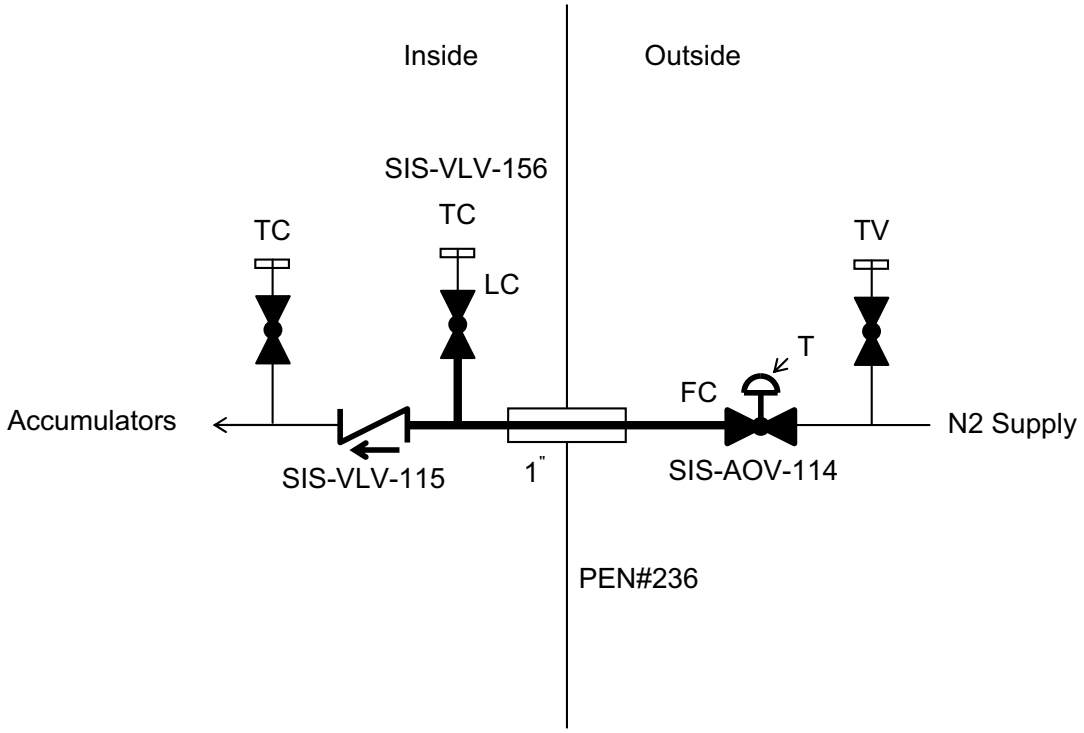

Figure 6.2.4-1 Containment Isolation Configurations (Sheet 9 of 52)

Safety Injection System

Safety Injection Line

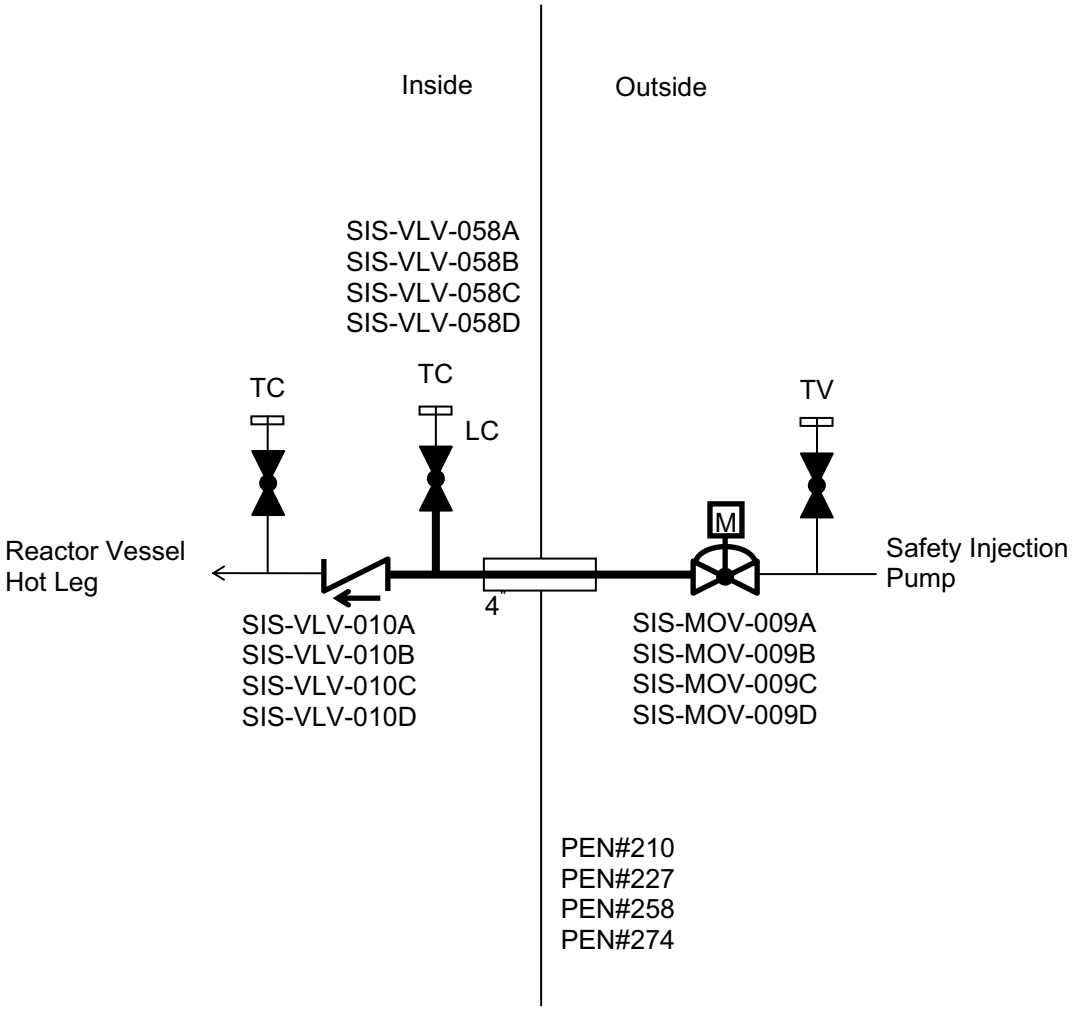

Figure 6.2.4-1 Containment Isolation Configurations (Sheet 10 of 52)

Safety Injection System

Safety Injection Pump Suction Line

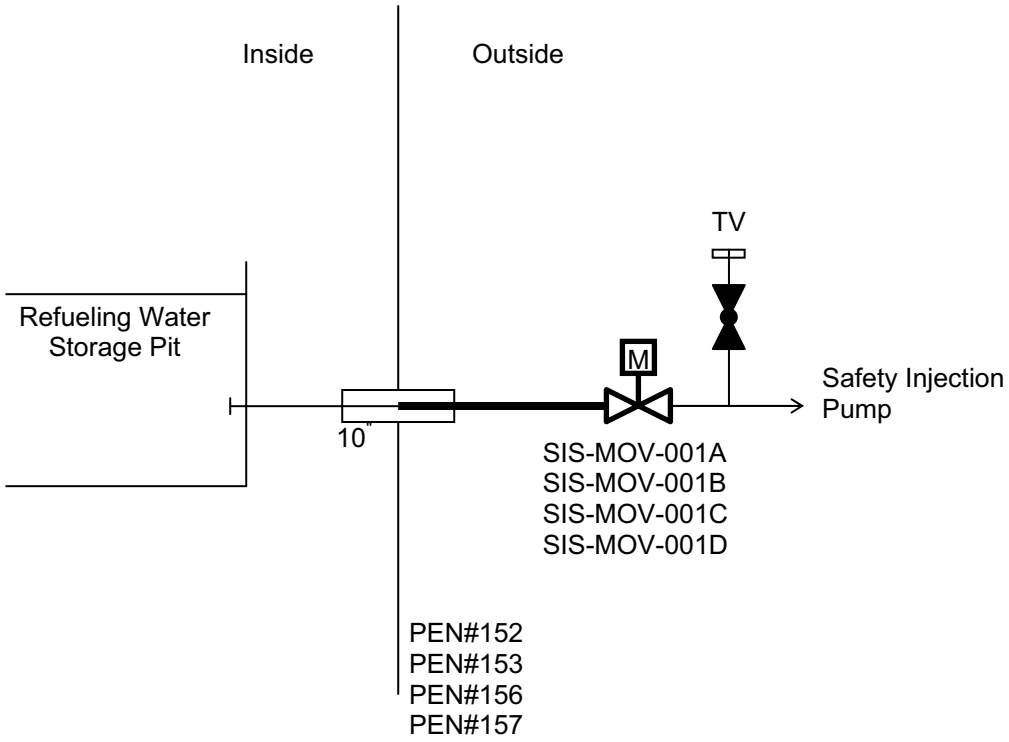

Note: Valve and piping are located in the Safeguard Component Area to control and terminate leakage.

DCD_06.02.04-55

Figure 6.2.4-1 Containment Isolation Configurations (Sheet 11 of 52)

Residual Heat Removal System

Containment Spray / Residual Heat Removal (CS/RHR) Pump Suction Line

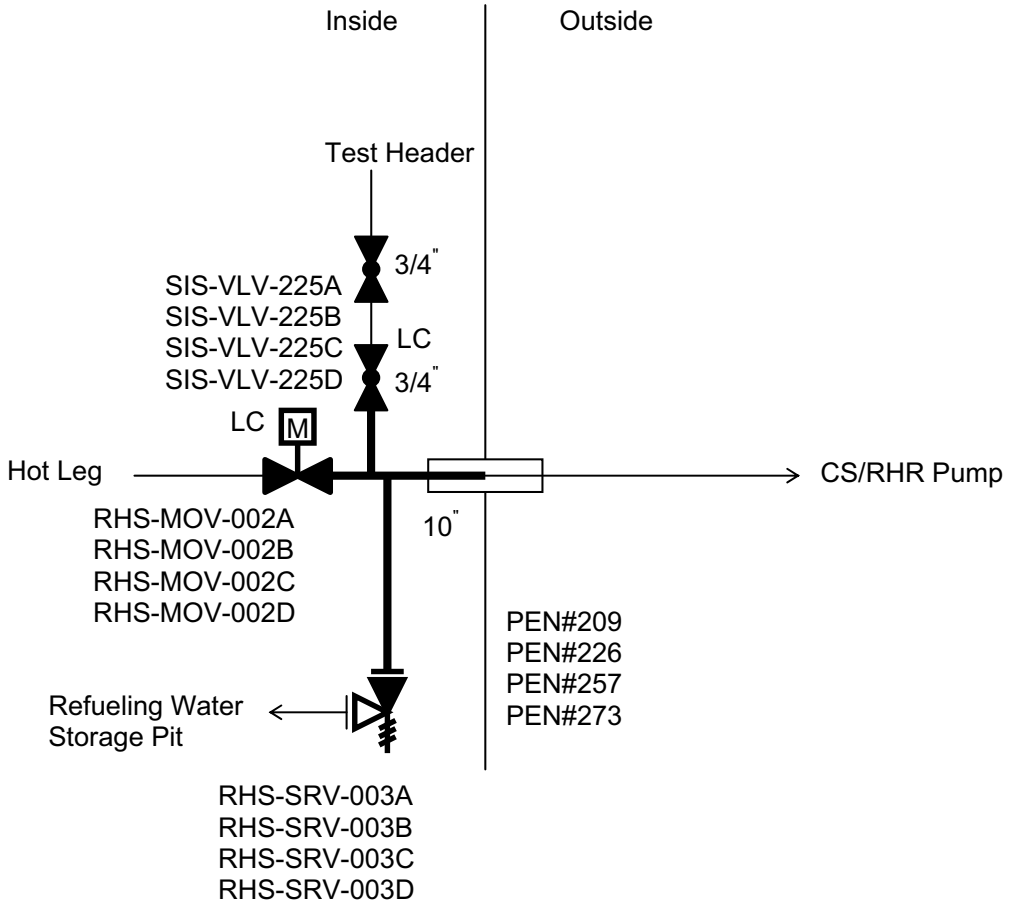

Figure 6.2.4-1 Containment Isolation Configurations (Sheet 12 of 52)

Residual Heat Removal System

Residual Heat Removal Return Line

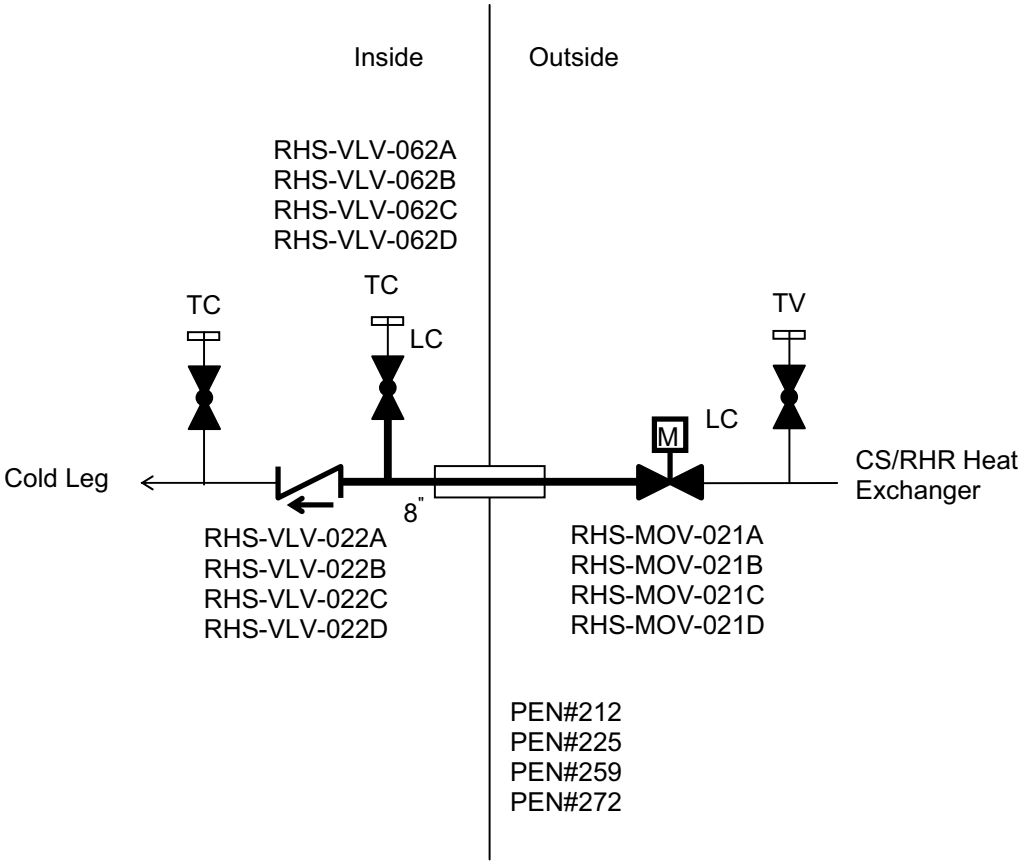

Figure 6.2.4-1 Containment Isolation Configurations (Sheet 13 of 52)

Feedwater System

Feedwater Line

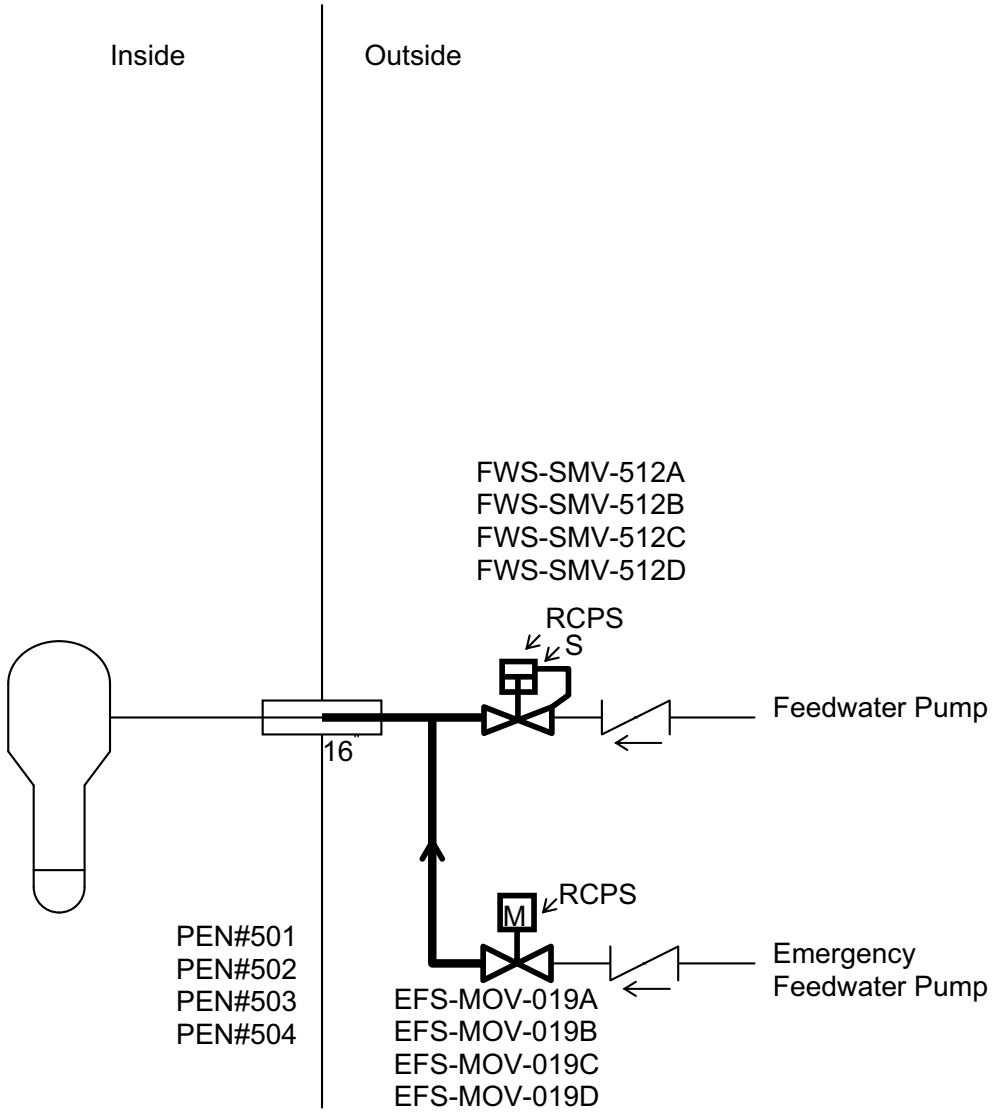

Figure 6.2.4-1 Containment Isolation Configurations (Sheet 14 of 52)

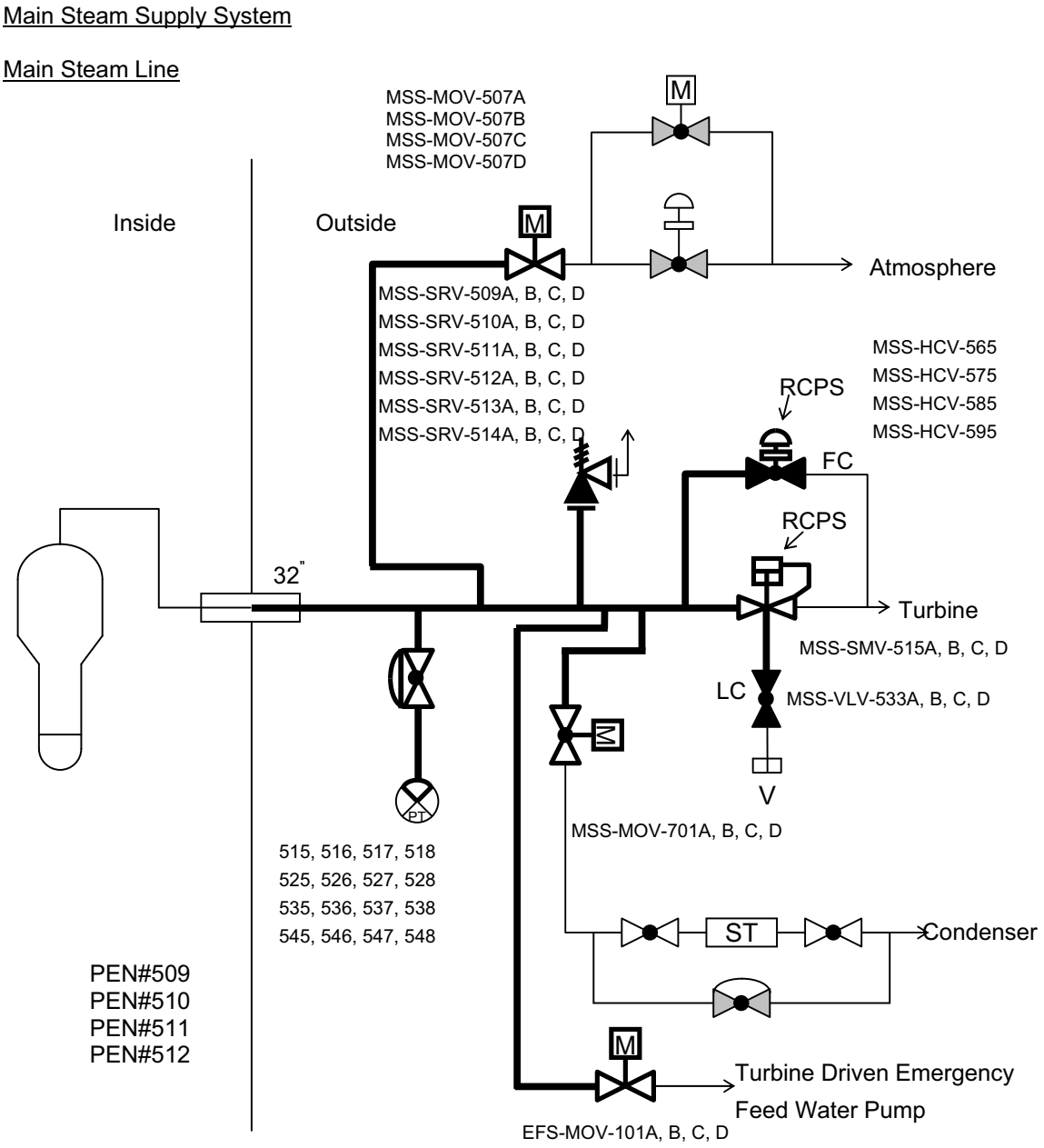

Note: Only representative instrument is shown.

Figure 6.2.4-1 Containment Isolation Configurations (Sheet 15 of 52)

Containment Spray System

Containment Spray Line

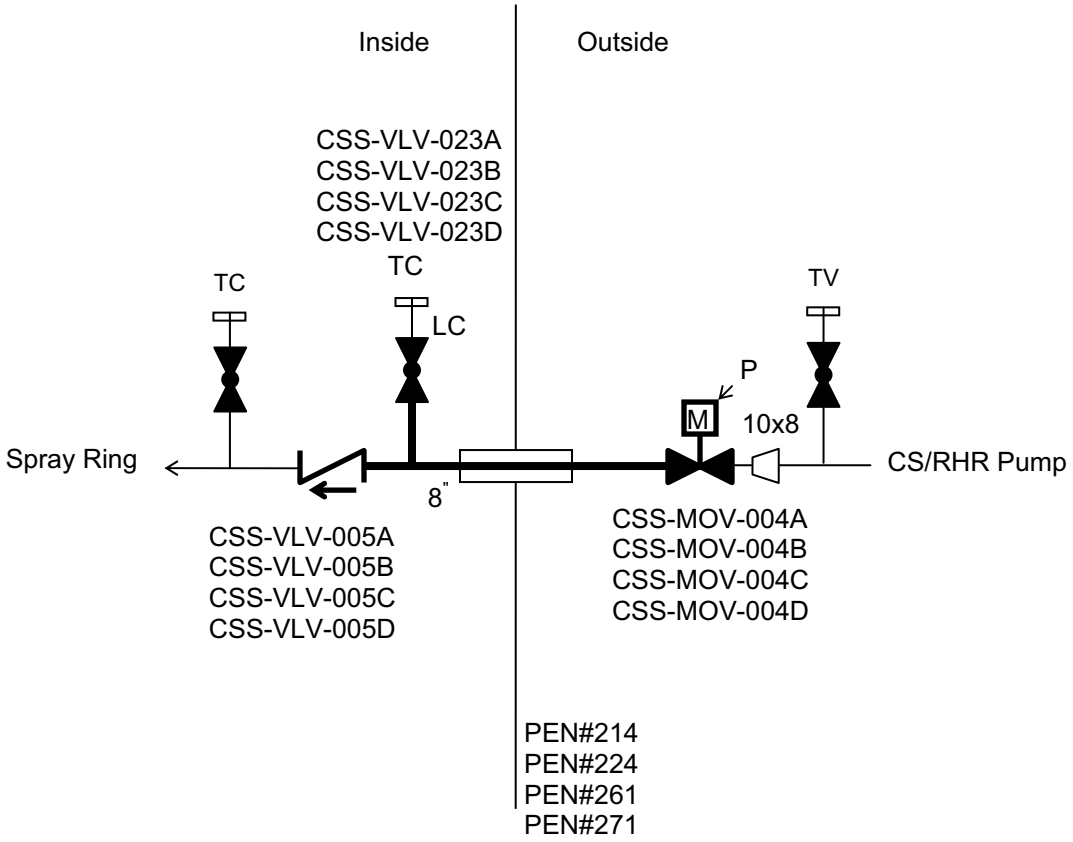

Figure 6.2.4-1 Containment Isolation Configurations (Sheet 16 of 52)

Containment Spray System

Containment Pressure Instrument Line

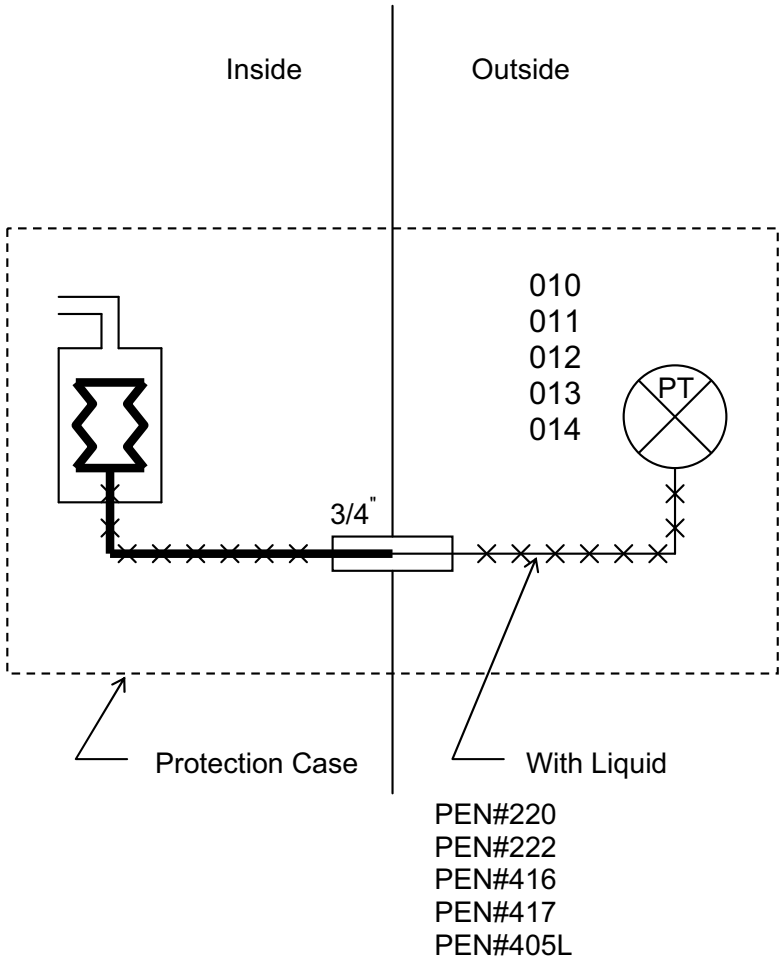

Figure 6.2.4-1 Containment Isolation Configurations (Sheet 17 of 52)

Containment Spray System

Containment Spray / Residual Heat Removal (CS/RHR) Pump Suction Line

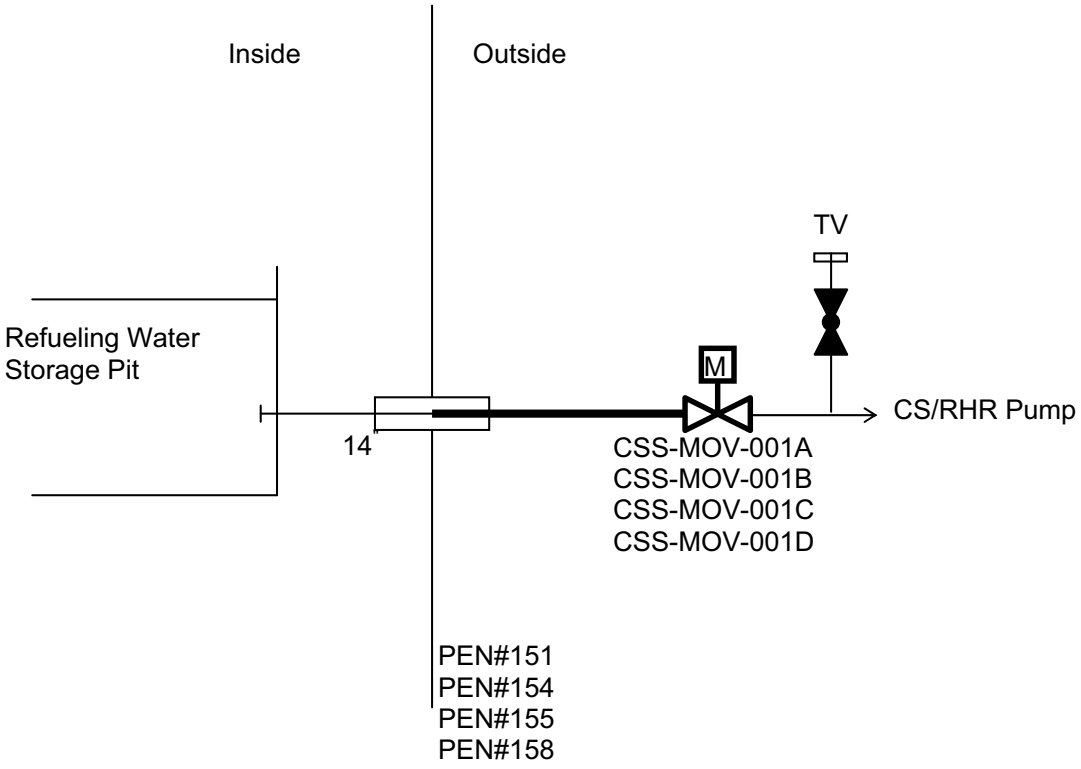

Note: Valve and piping are located in the Safeguard Component Area to control and terminate leakage.

DCD_06.02.04-55

Figure 6.2.4-1 Containment Isolation Configurations (Sheet 18 of 52)

Component Cooling Water System

Cooling Water supply Line to Reactor Coolant Pump

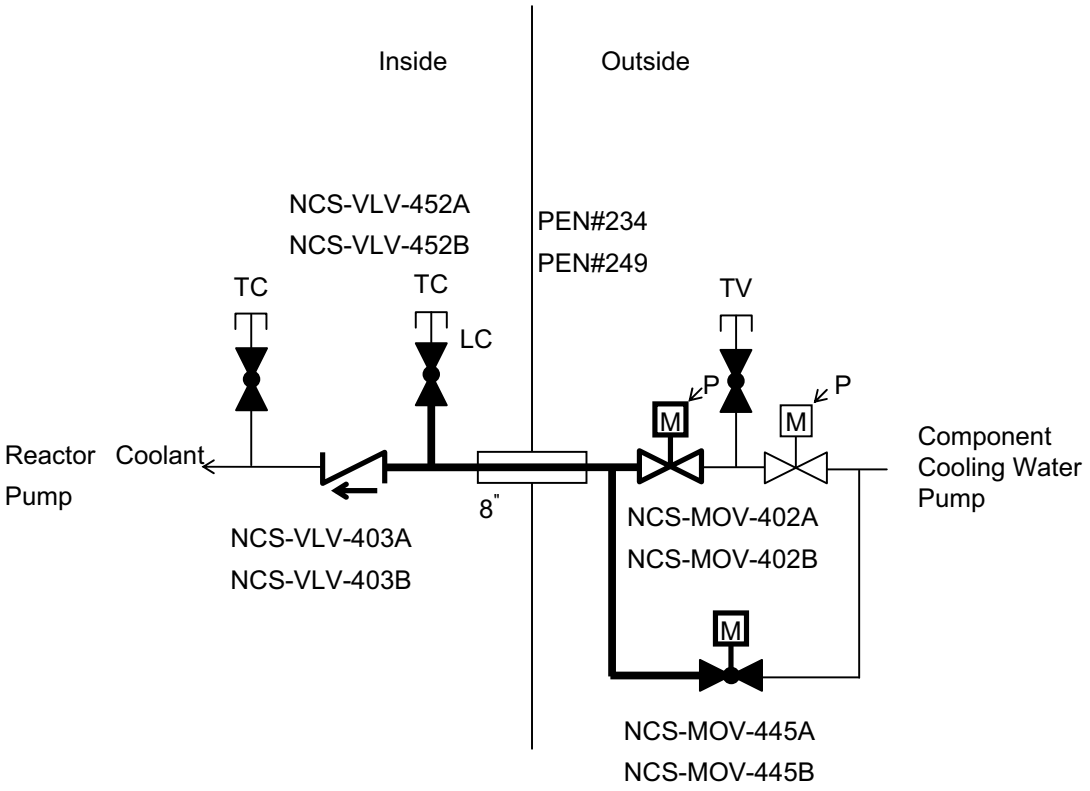

Note: Motor Operated Valve outer side of containment is installed for preventing loss of Component Cooling Water when pipe rupture inside the containment is occurred.

Figure 6.2.4-1 Containment Isolation Configurations (Sheet 19 of 52)

Component Cooling Water System

Cooling Water Return Line from Reactor Coolant Pump

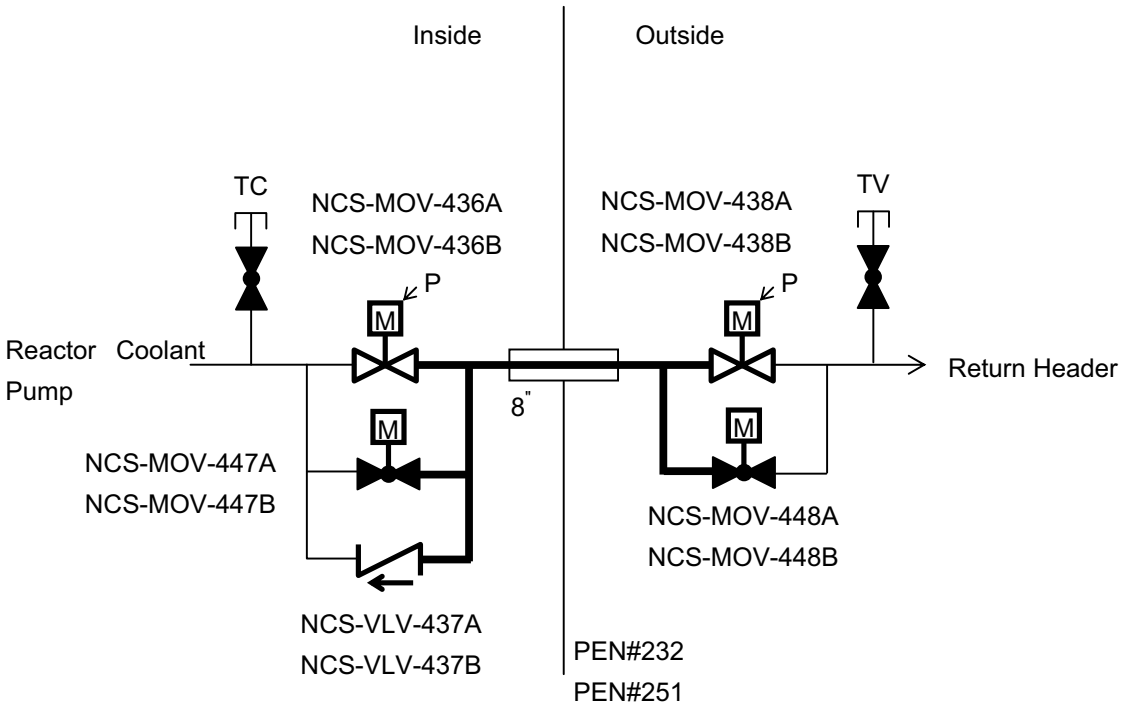

Figure 6.2.4-1 Containment Isolation Configurations (Sheet 20 of 52)

Component Cooling Water System

Component Cooling Water Line to Excess Letdown Heat Exchanger

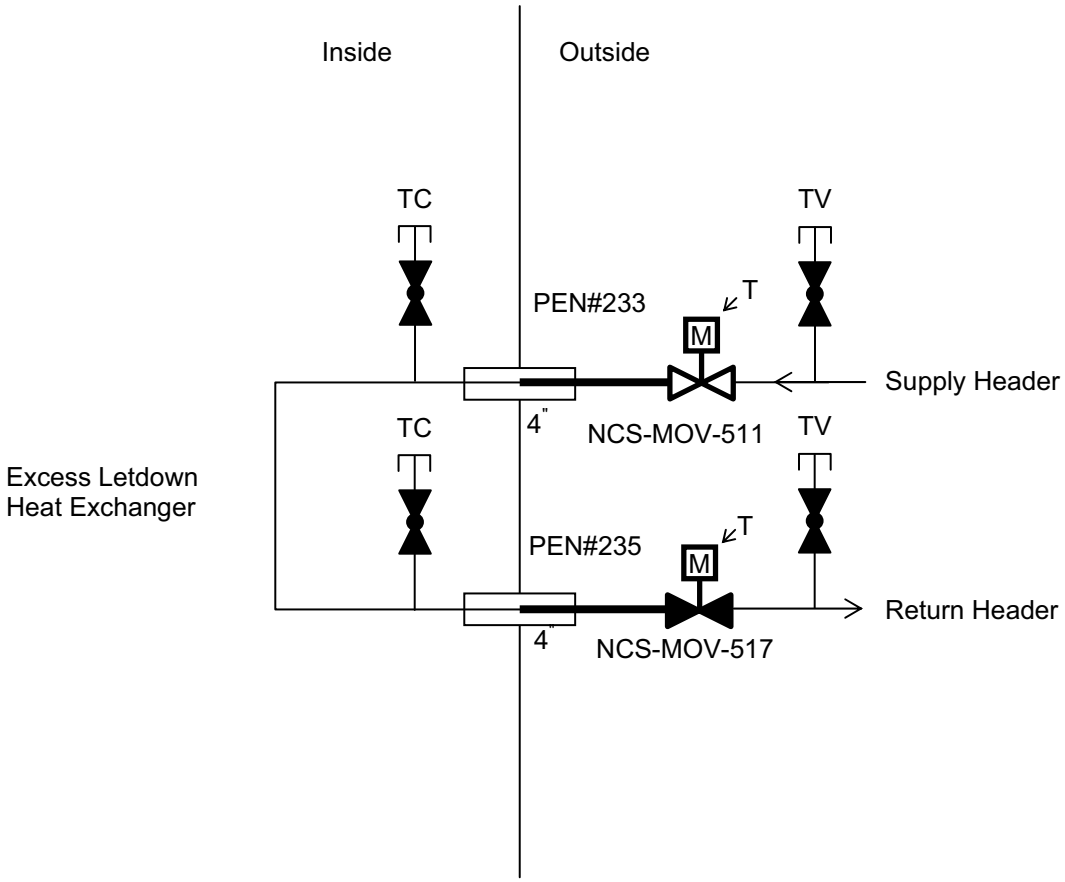

Figure 6.2.4-1 Containment Isolation Configurations (Sheet 21 of 52)

Component Cooling Water System

Component Cooling Water Line to Letdown Heat Exchanger

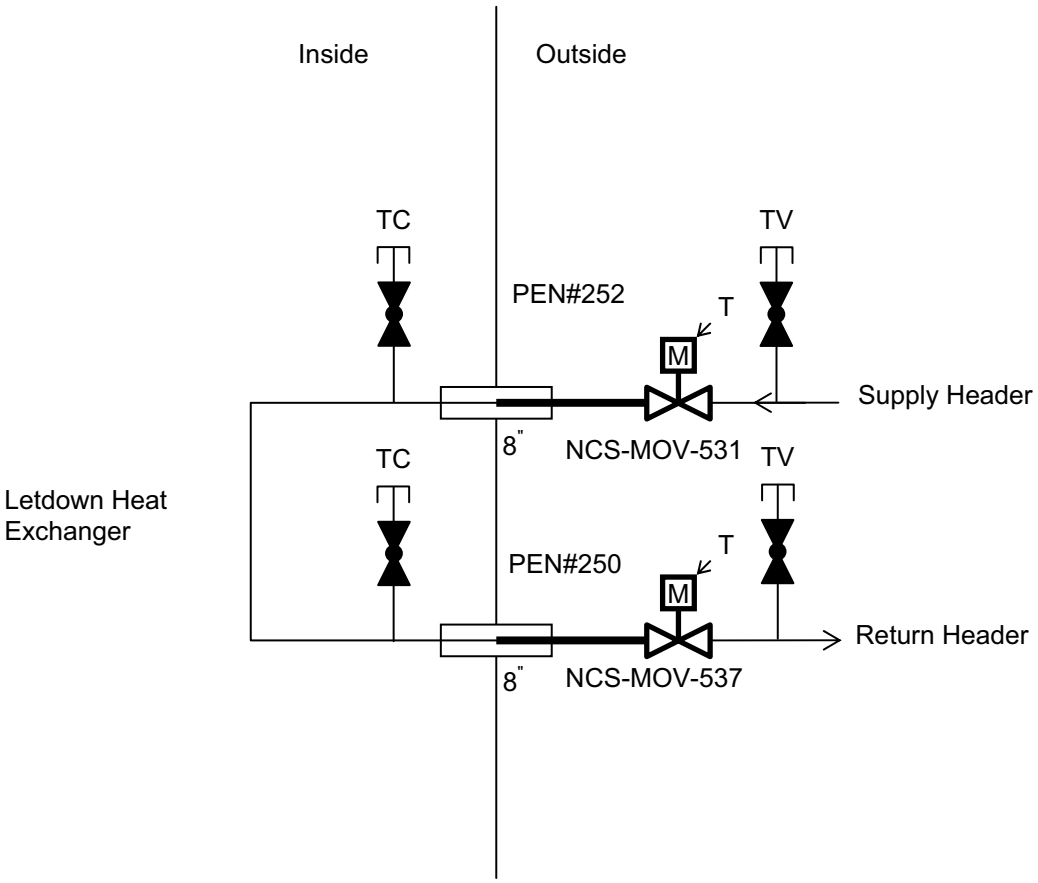

Figure 6.2.4-1 Containment Isolation Configurations (Sheet 22 of 52)

Waste Management System

C/V Reactor Coolant Drain Tank Gas Analysis Line

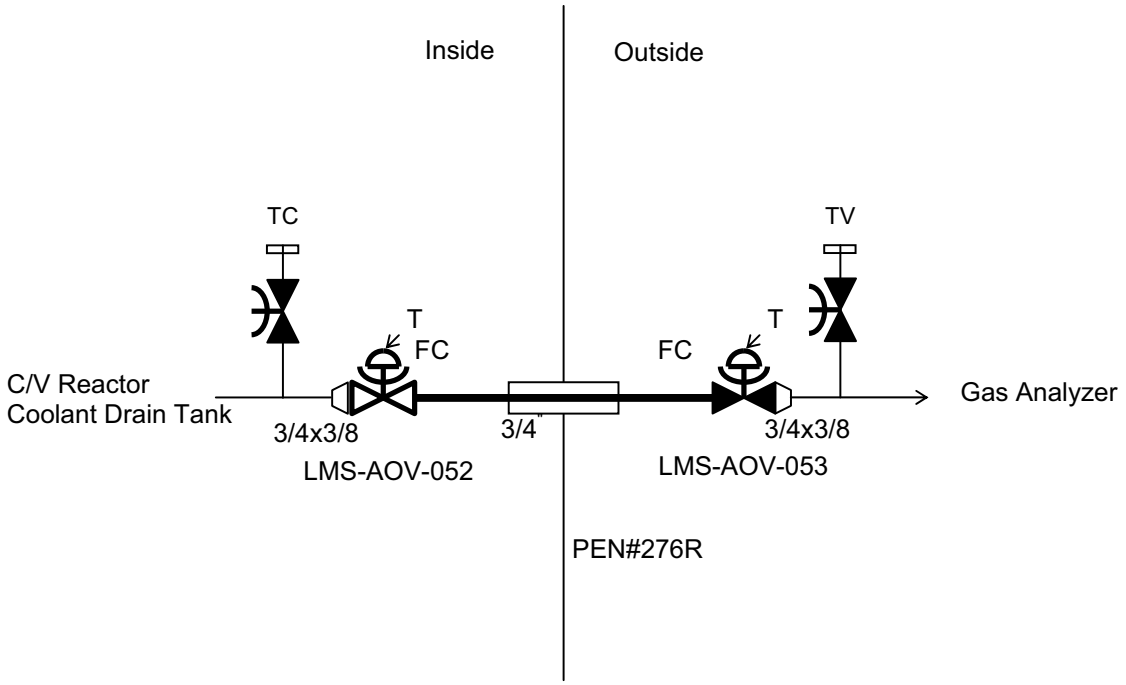

Figure 6.2.4-1 Containment Isolation Configurations (Sheet 23 of 52)

Waste Management System

C/V Reactor Coolant Drain Tank N2 Supply and Vent Line

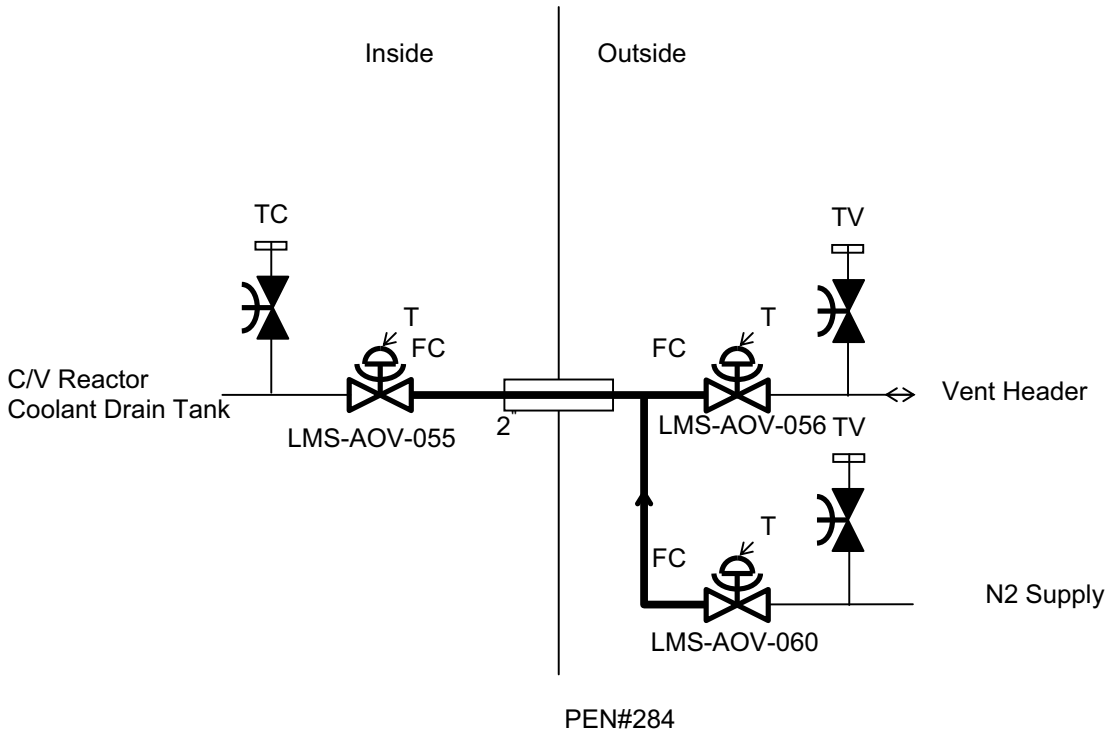

Figure 6.2.4-1 Containment Isolation Configurations (Sheet 24 of 52)

Waste Management System

C/V Reactor Coolant Drain Pump Discharge Line

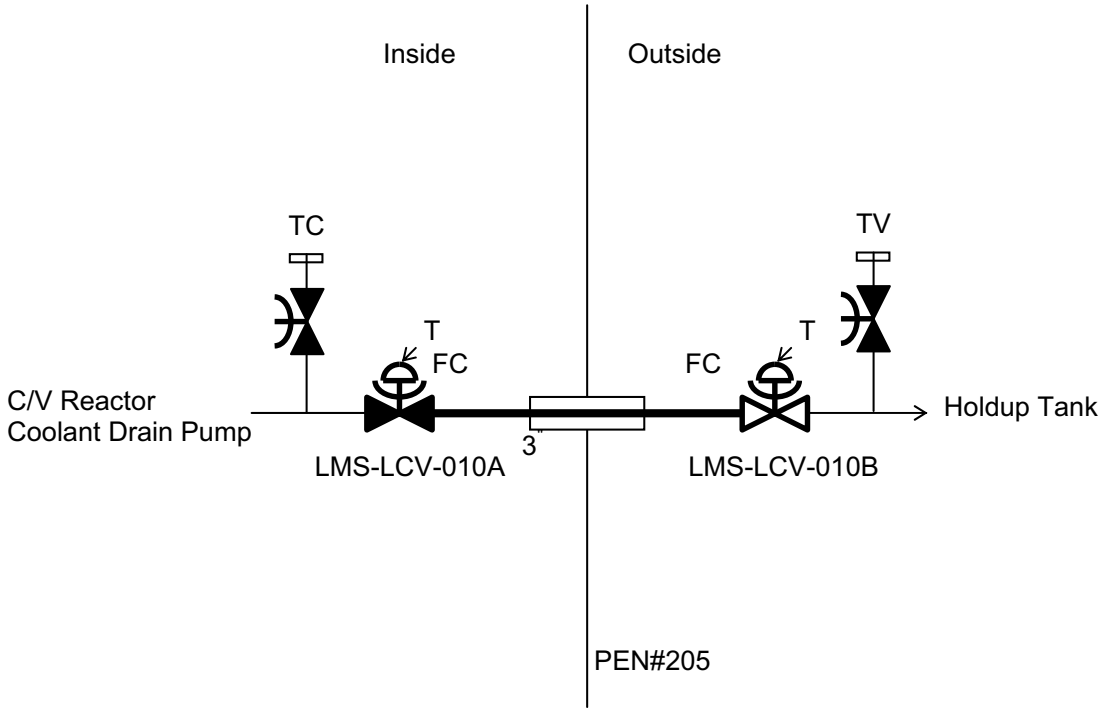

Figure 6.2.4-1 Containment Isolation Configurations (Sheet 25 of 52)

Waste Management System

C/V Sump Pump Discharge Line

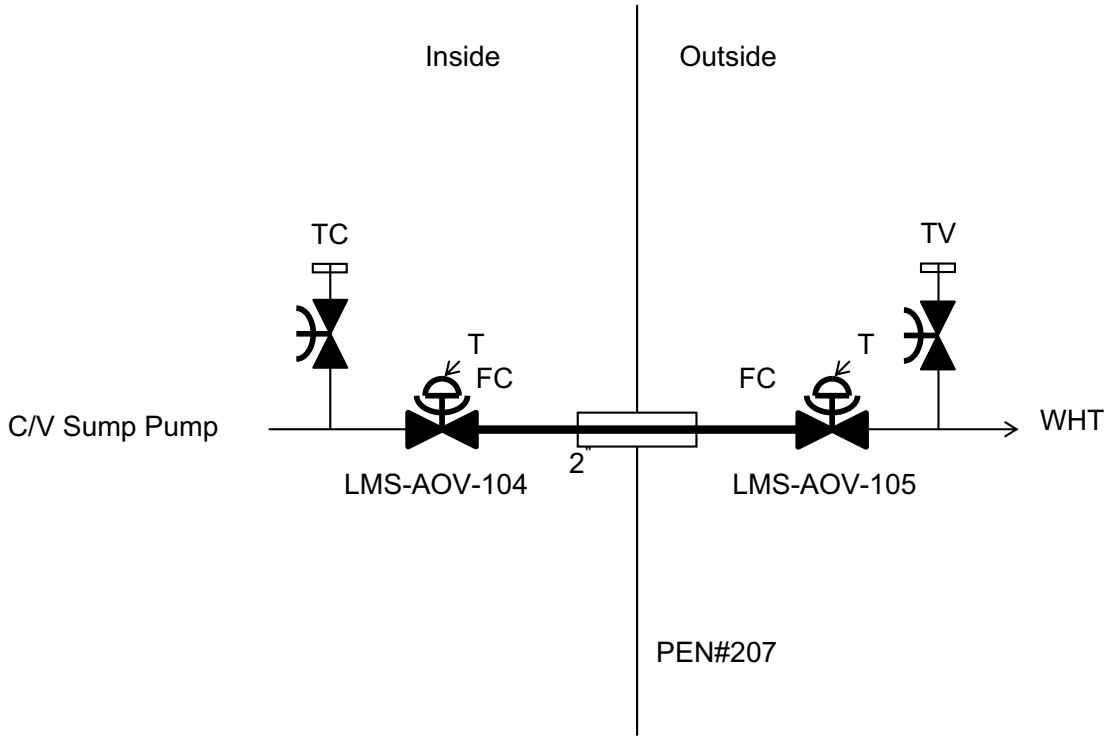

Figure 6.2.4-1 Containment Isolation Configurations (Sheet 26 of 52)

Process and Post Accident Sampling System

Pressurizer Gas and Liquid Phase / Reactor Coolant Sampling Line

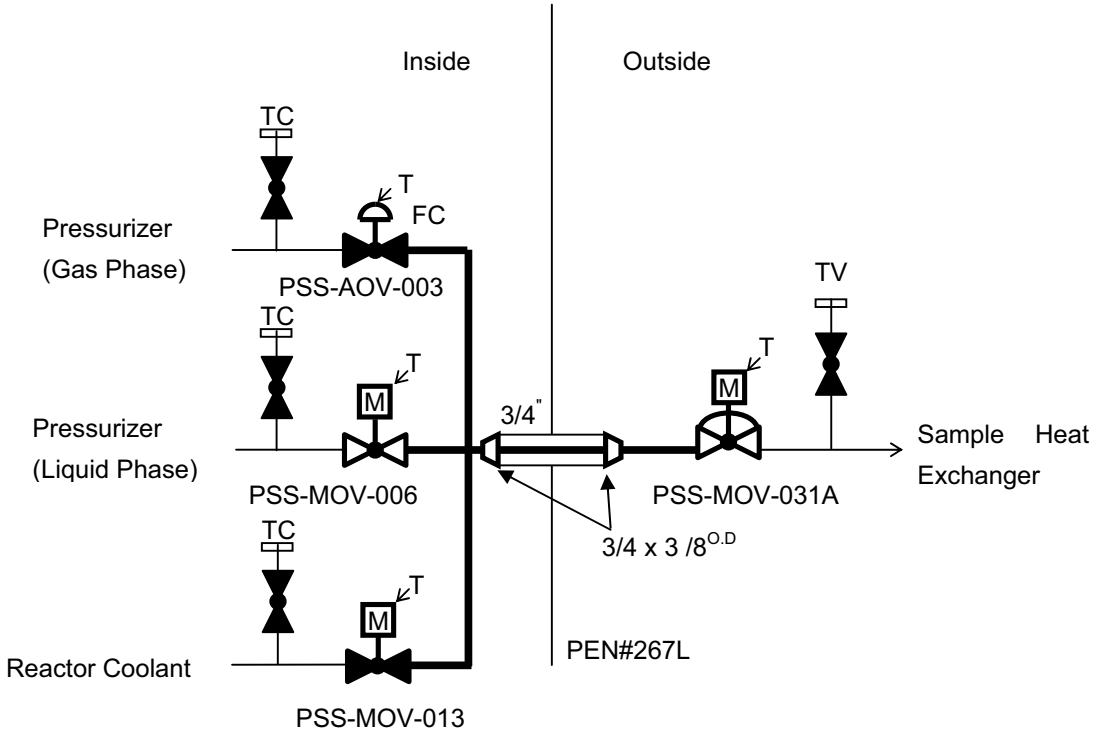

Figure 6.2.4-1 Containment Isolation Configurations (Sheet 27 of 52)

Process and Post Accident Sampling System

Reactor Coolant Sampling Line

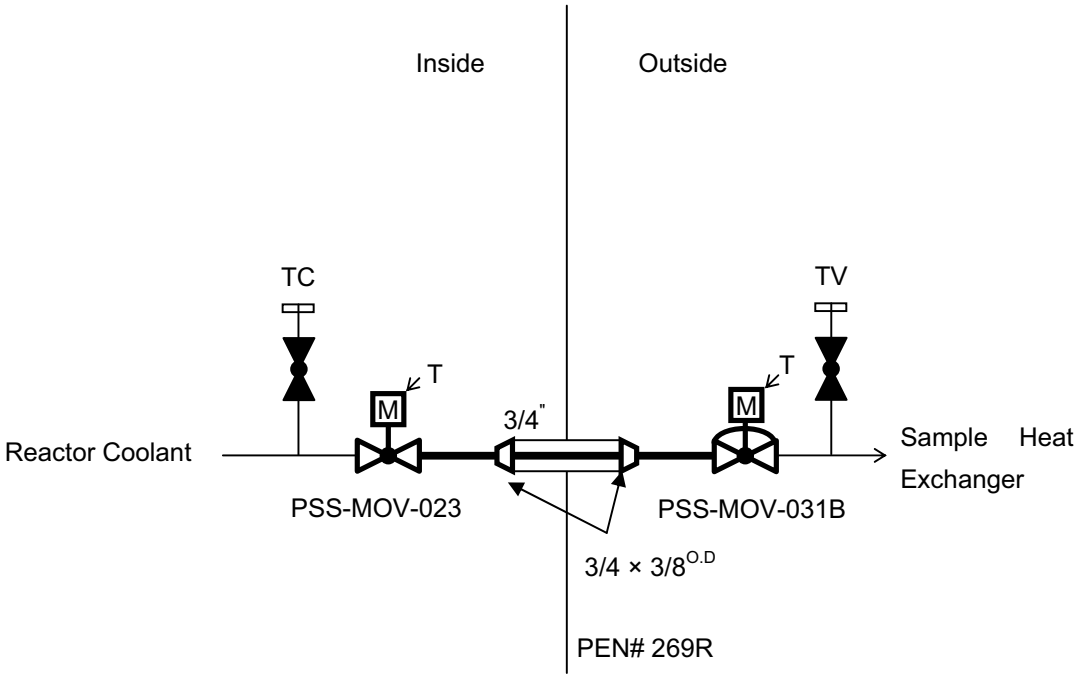

Figure 6.2.4-1 Containment Isolation Configurations (Sheet 28 of 52)

Process and Post Accident Sampling System

Accumulator Sampling Line

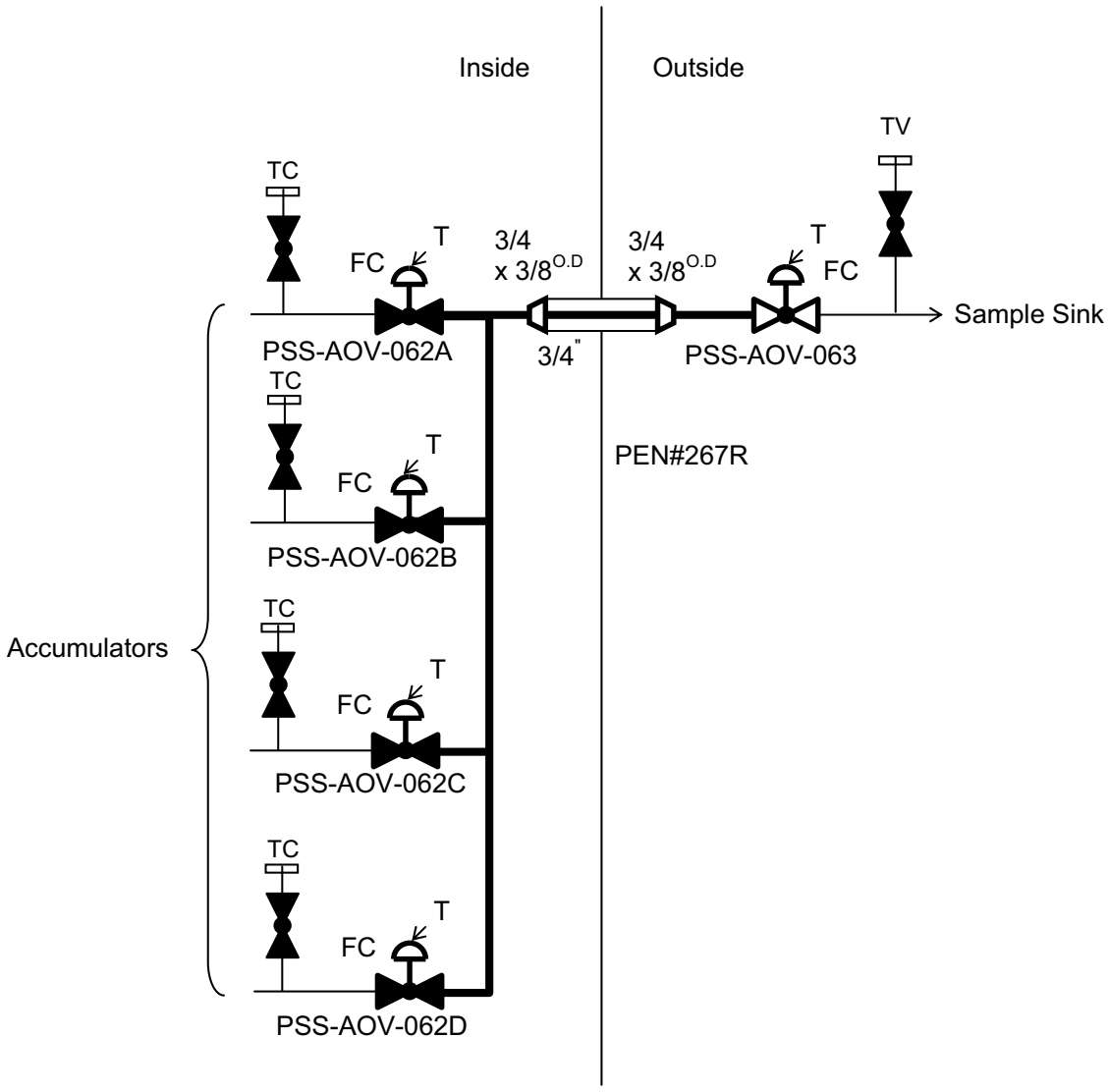

Figure 6.2.4-1 Containment Isolation Configurations (Sheet 29 of 52)

Process and Post Accident Sampling System

Post-Accident Sampling Return Line

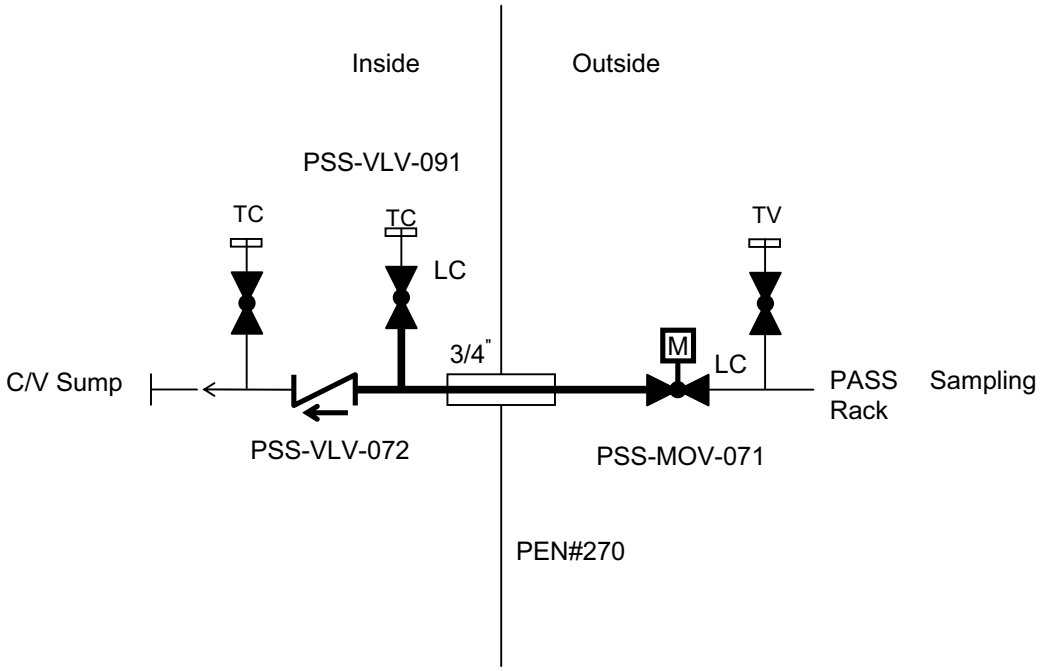

Figure 6.2.4-1 Containment Isolation Configurations (Sheet 30 of 52)

Steam Generator Blowdown System

Steam Generator Blowdown (SGBD) Line

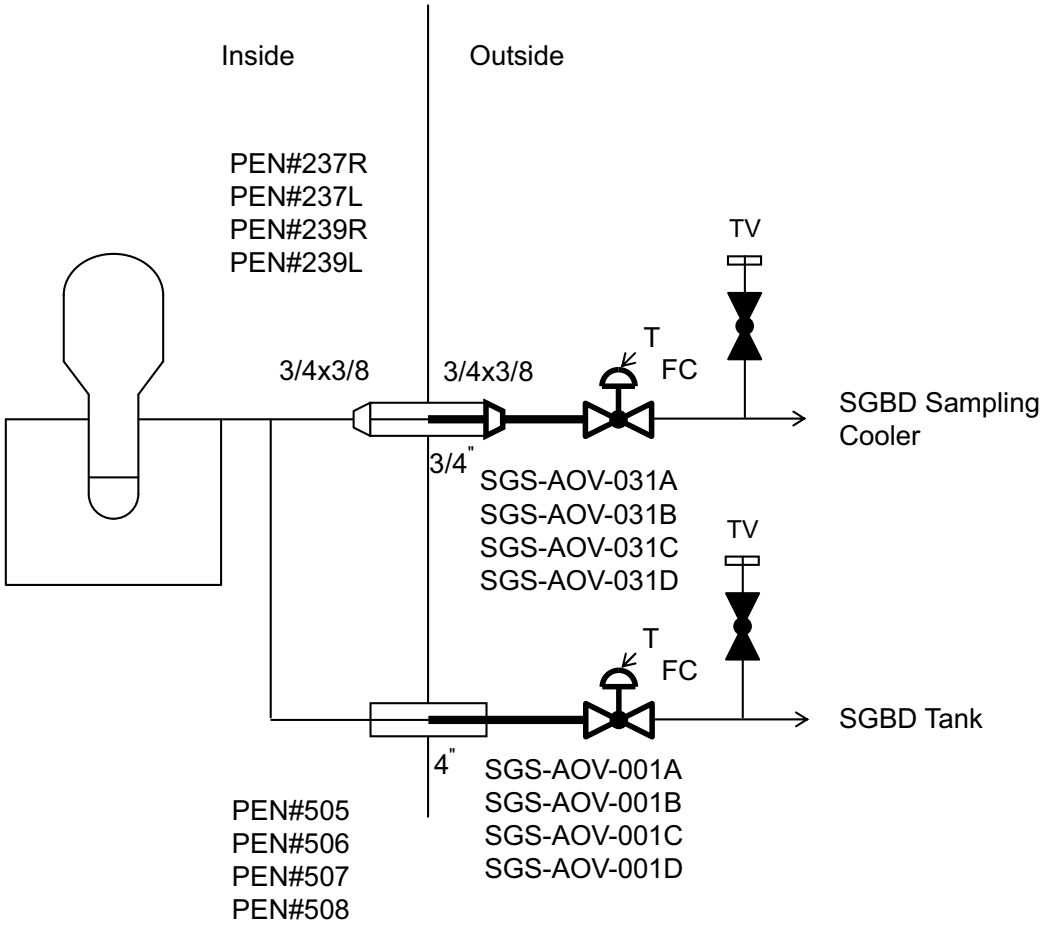

Figure 6.2.4-1 Containment Isolation Configurations (Sheet 31 of 52)

Refueling Water System

Refueling Water Recirculation Pump Suction Line

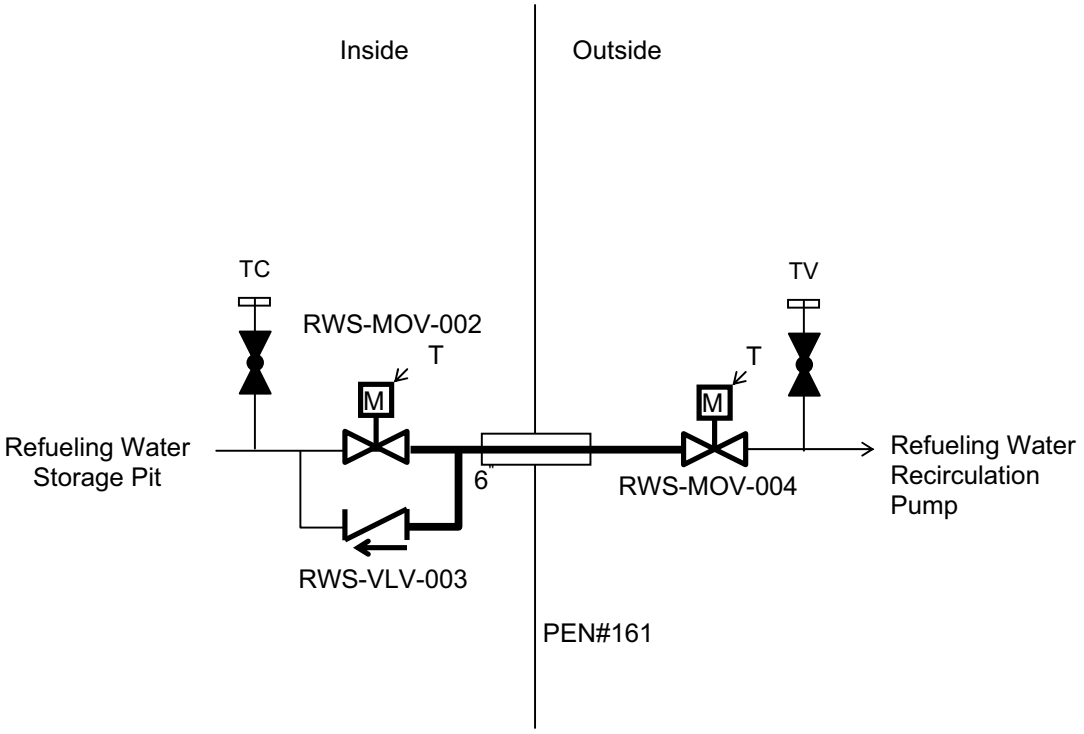

Figure 6.2.4-1 Containment Isolation Configurations (Sheet 32 of 52)

Refueling Water System

Refueling Water Recirculation Pump Discharge Line

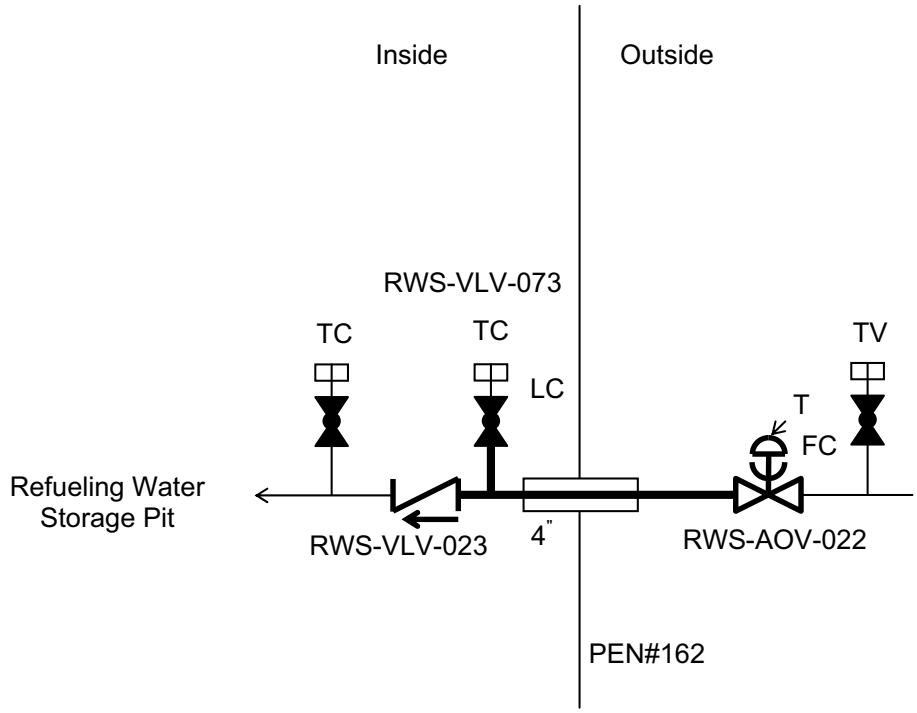

Figure 6.2.4-1 Containment Isolation Configurations (Sheet 33 of 52)

Primary Makeup Water System

Demineralized Water Supply Line

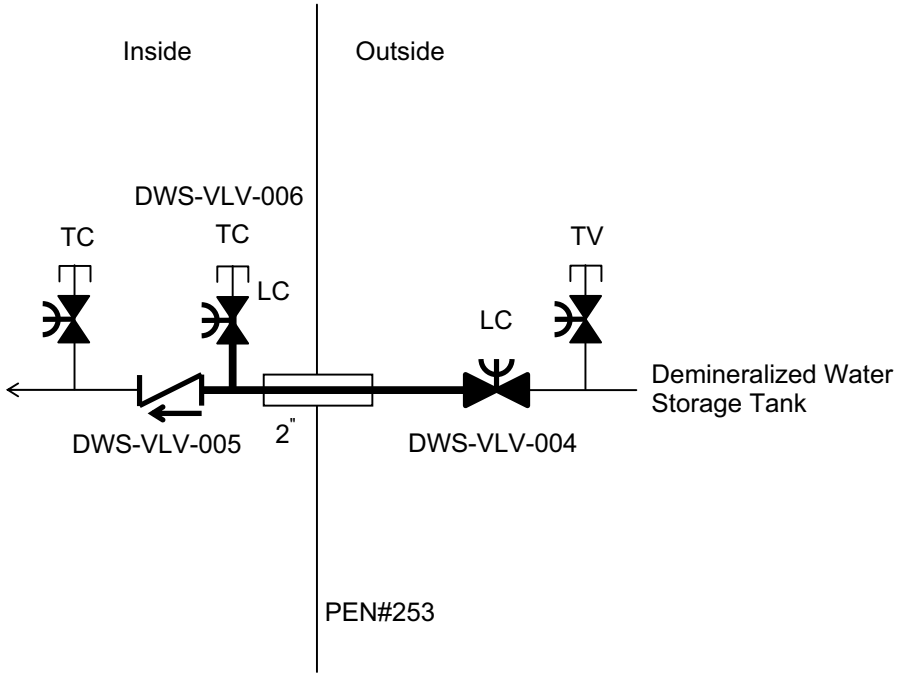

Figure 6.2.4-1 Containment Isolation Configurations (Sheet 34 of 52)

Instrument Air System

Instrument Air (IA) Line

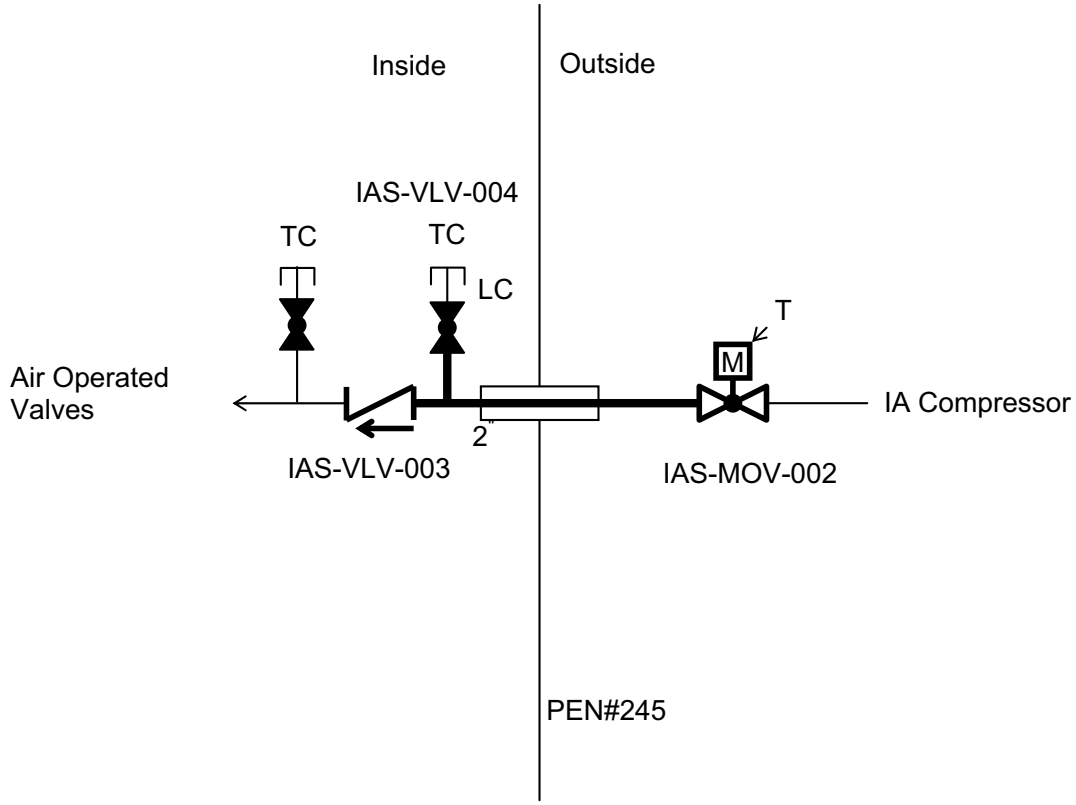

Figure 6.2.4-1 Containment Isolation Configurations (Sheet 35 of 52)

Fire Protection Water Supply System

Water Supply Line to Containment Air Purification Filter Unit

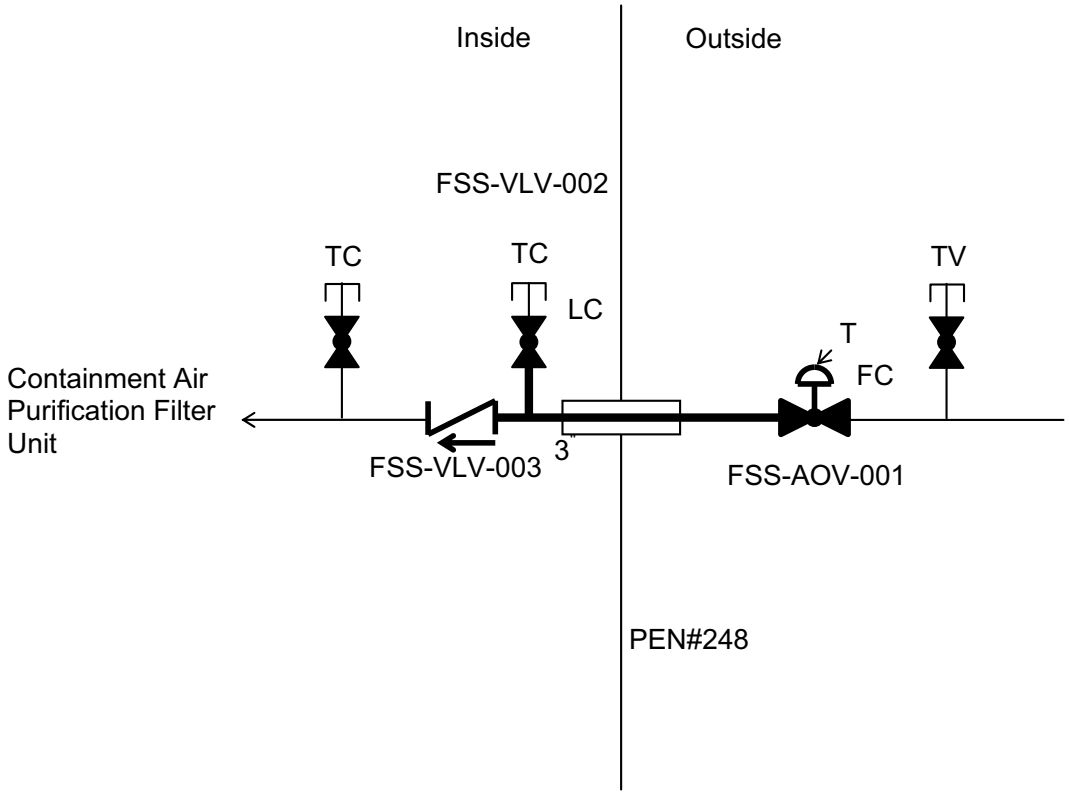

Figure 6.2.4-1 Containment Isolation Configurations (Sheet 36 of 52)

Fire Protection Water Supply System

Injection Line to Reactor Cavity

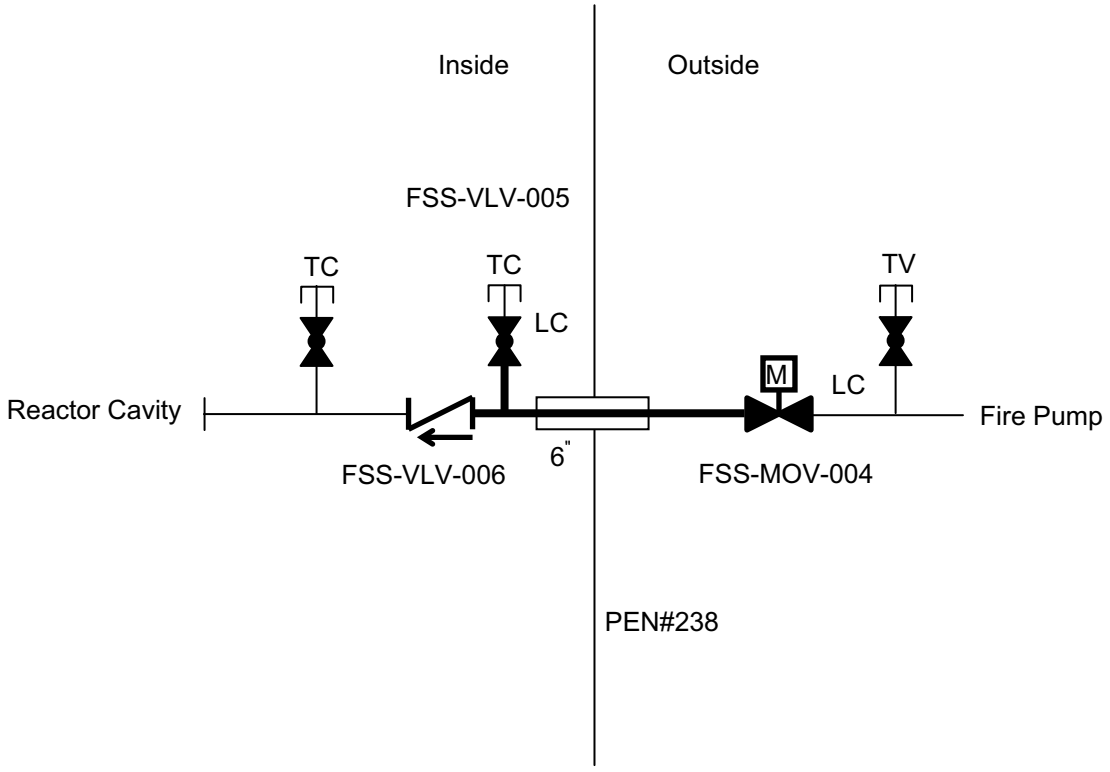

Figure 6.2.4-1 Containment Isolation Configurations (Sheet 37 of 52)

Station Service Air System

Service Air Line

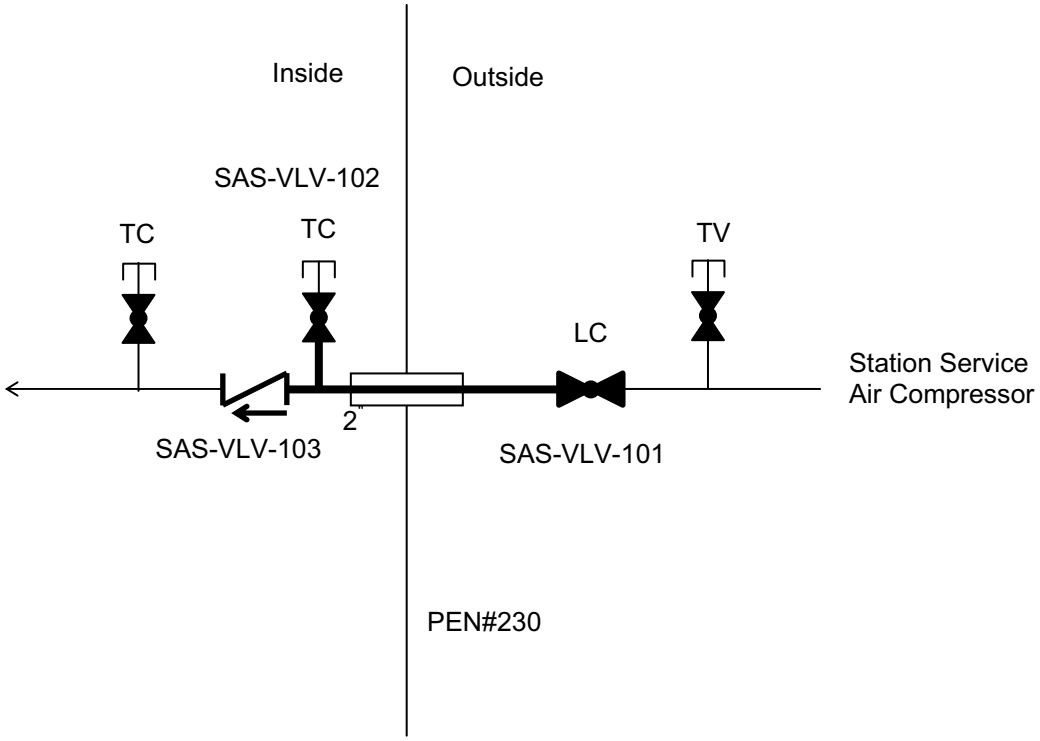

Figure 6.2.4-1 Containment Isolation Configurations (Sheet 38 of 52)

Fuel Transfer Tube

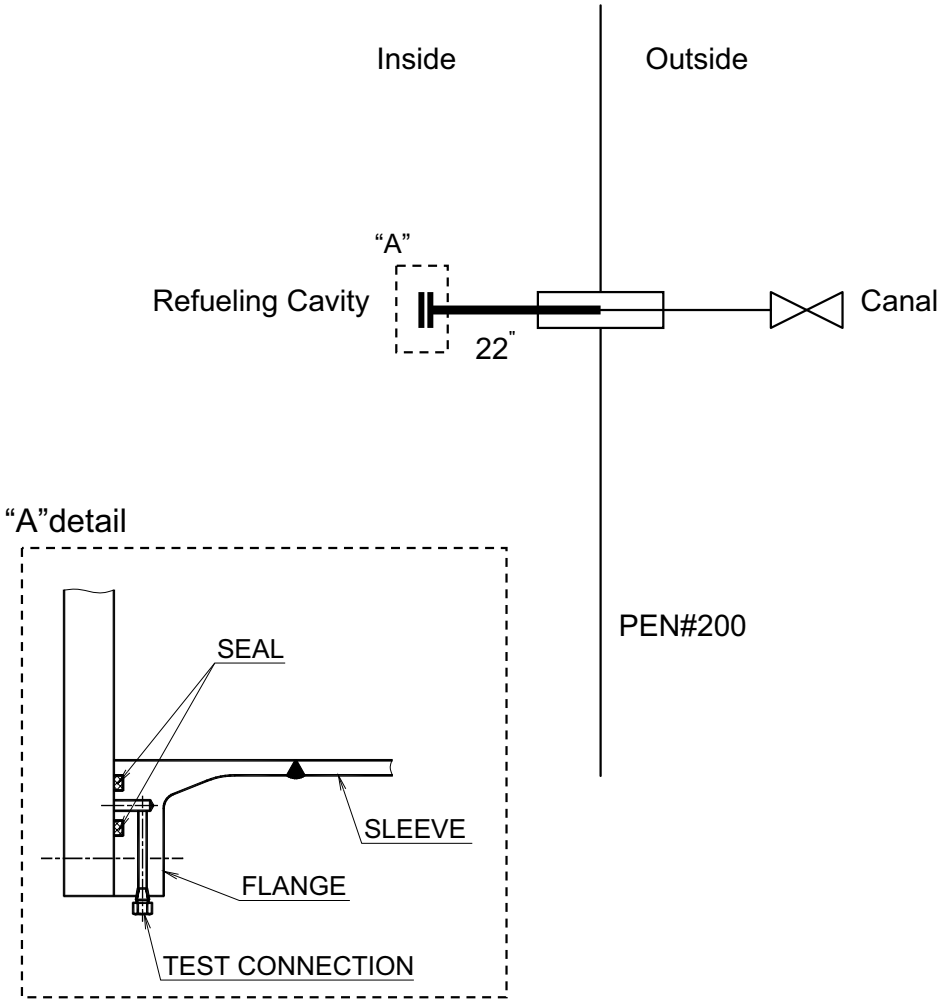

Figure 6.2.4-1 Containment Isolation Configurations (Sheet 39 of 52)

HVAC System (Containment Purge System)

Containment High Volume Purge Supply and Exhaust Line

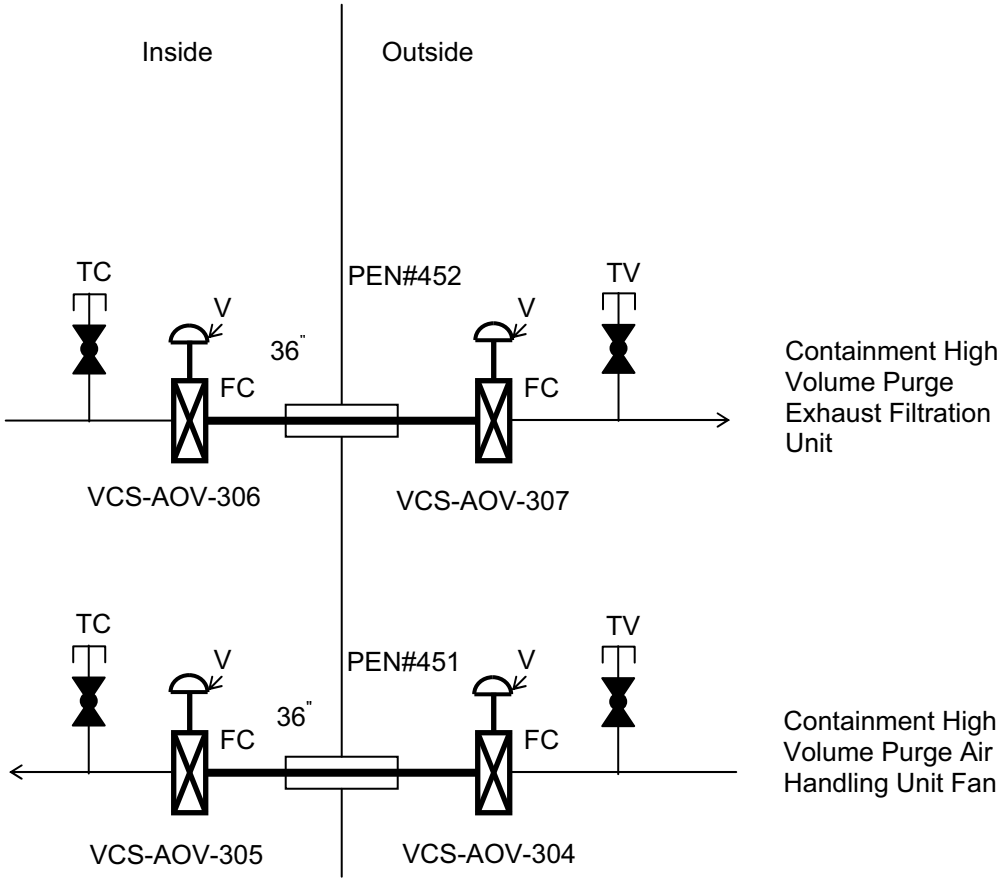

Figure 6.2.4-1 Containment Isolation Configurations (Sheet 40 of 52)

HVAC System (Containment Purge System)

Containment Low Volume Purge Supply and Exhaust Line

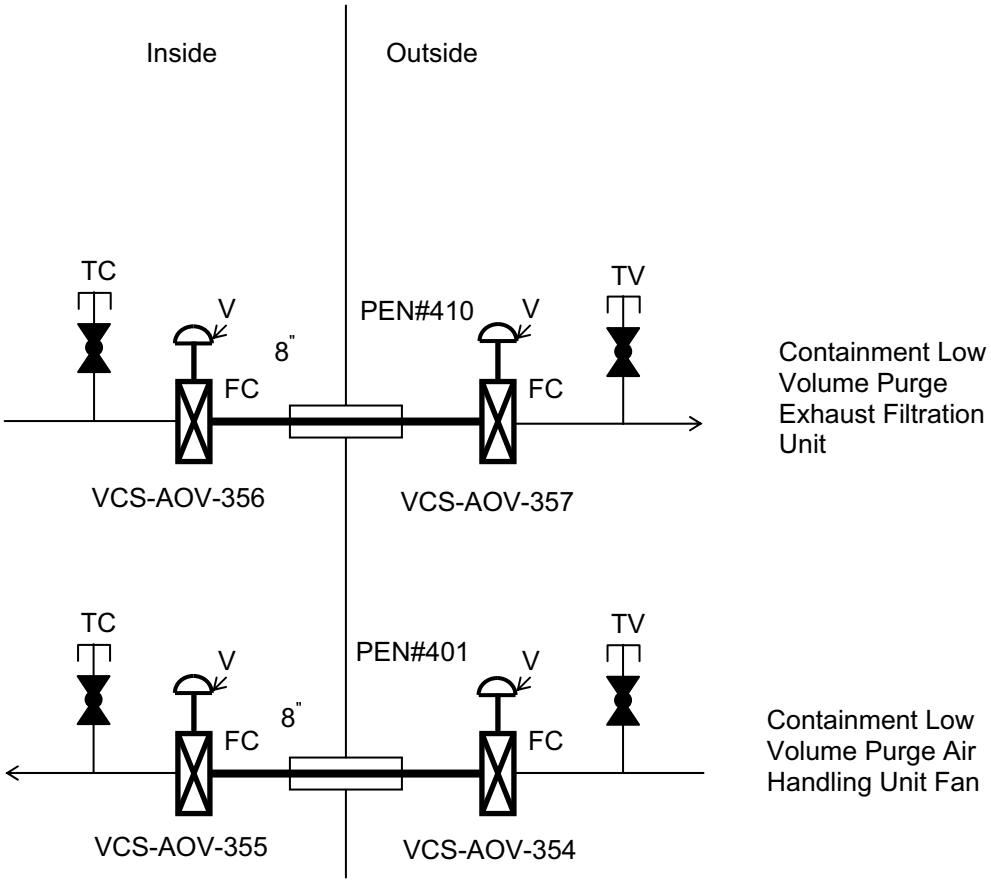

Figure 6.2.4-1 Containment Isolation Configurations (Sheet 41 of 52)

HVAC System (Containment Purge System)

Containment Pressure Detection Line

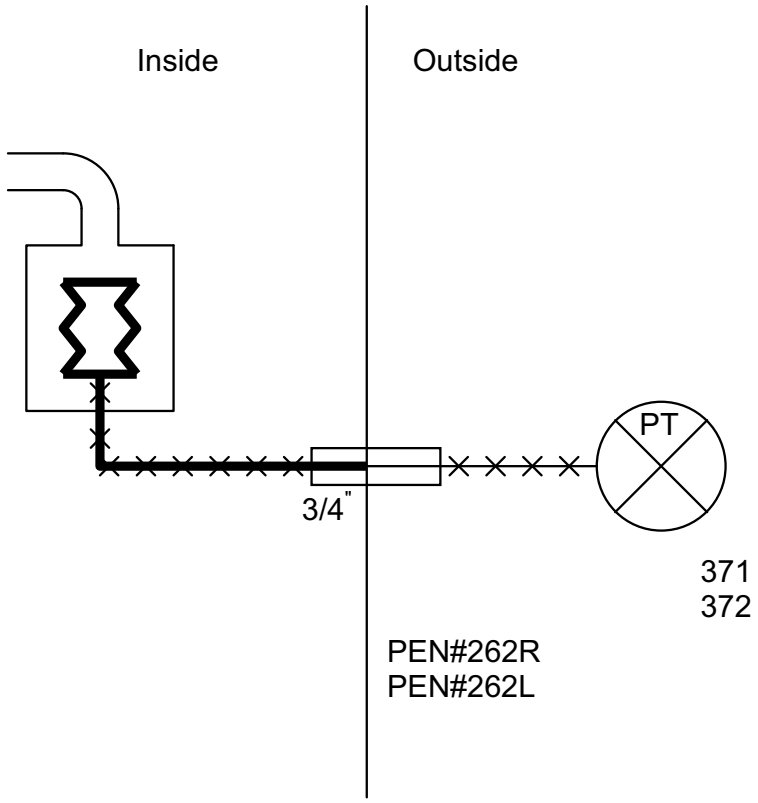

Figure 6.2.4-1 Containment Isolation Configurations (Sheet 42 of 52)

HVAC System (Non Essential Chilled Water System)

Containment Fan Cooler Line

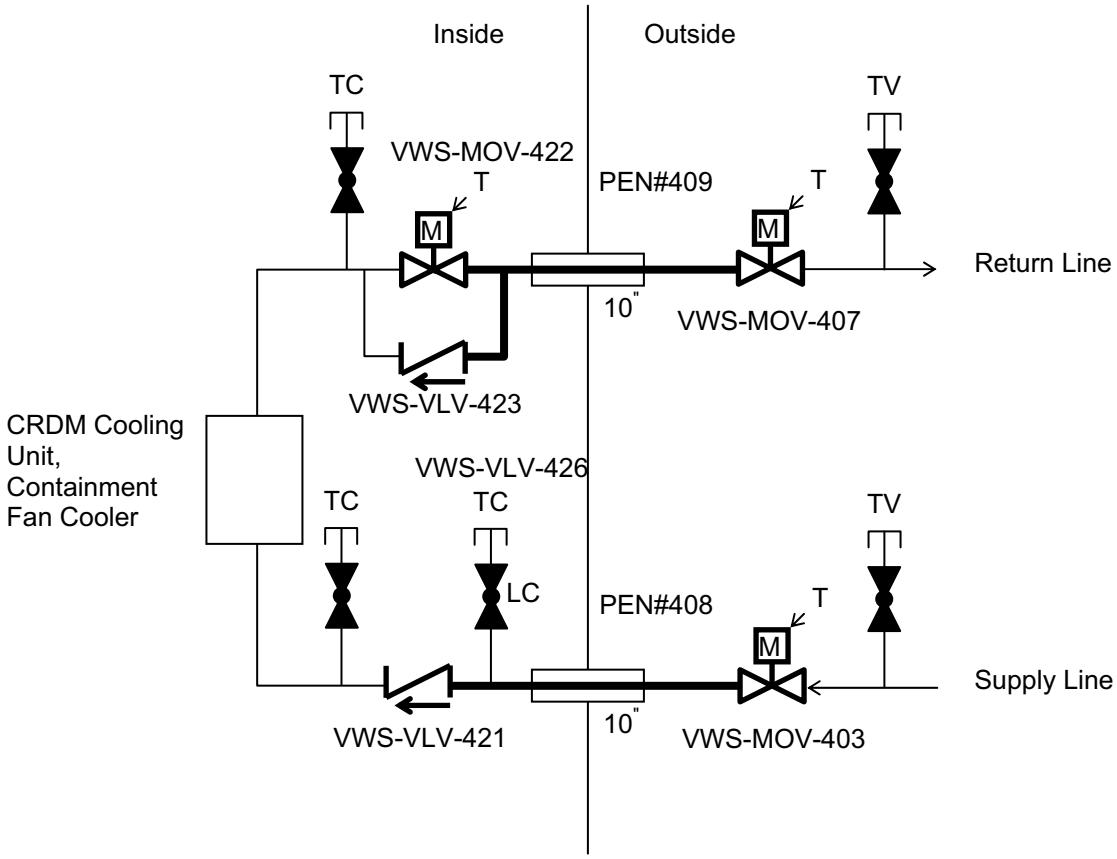

Figure 6.2.4-1 Containment Isolation Configurations (Sheet 43 of 52)

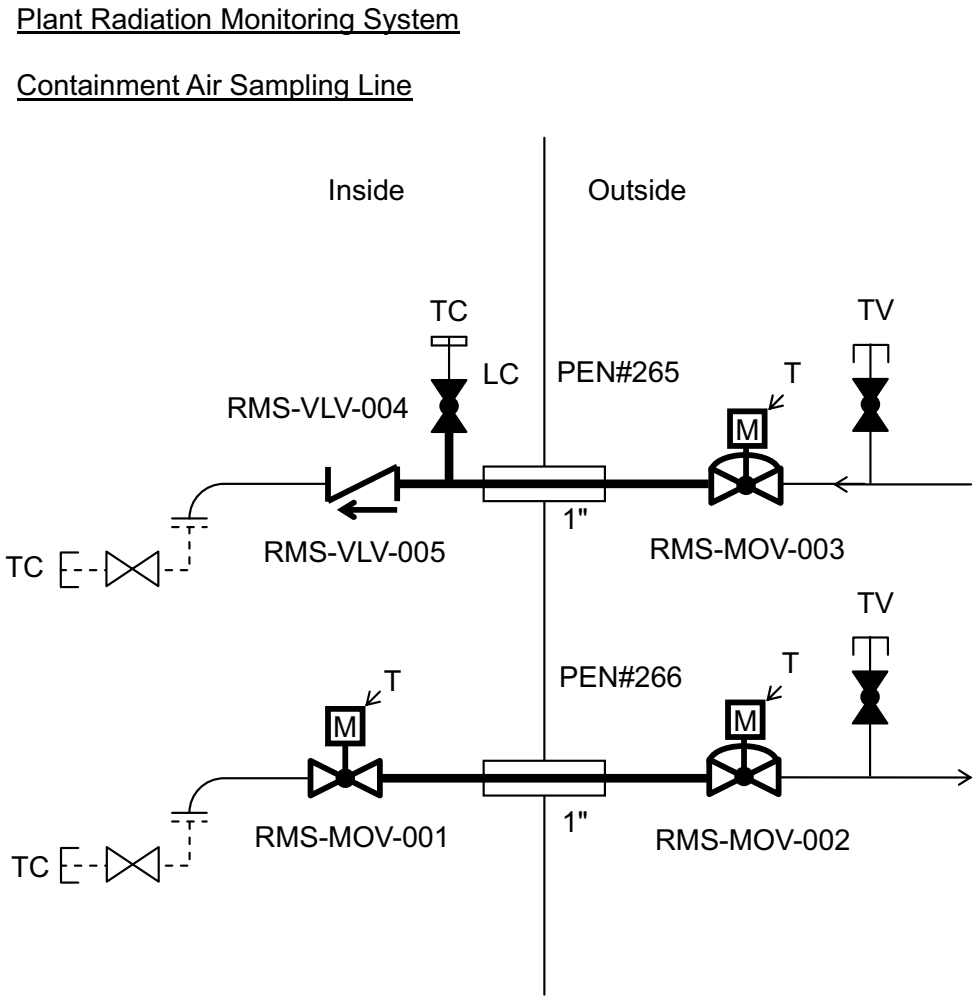

Figure 6.2.4-1 Containment Isolation Configurations (Sheet 44 of 52)

In-Core Instrument Gas Purge System

CO_2 Purge Line

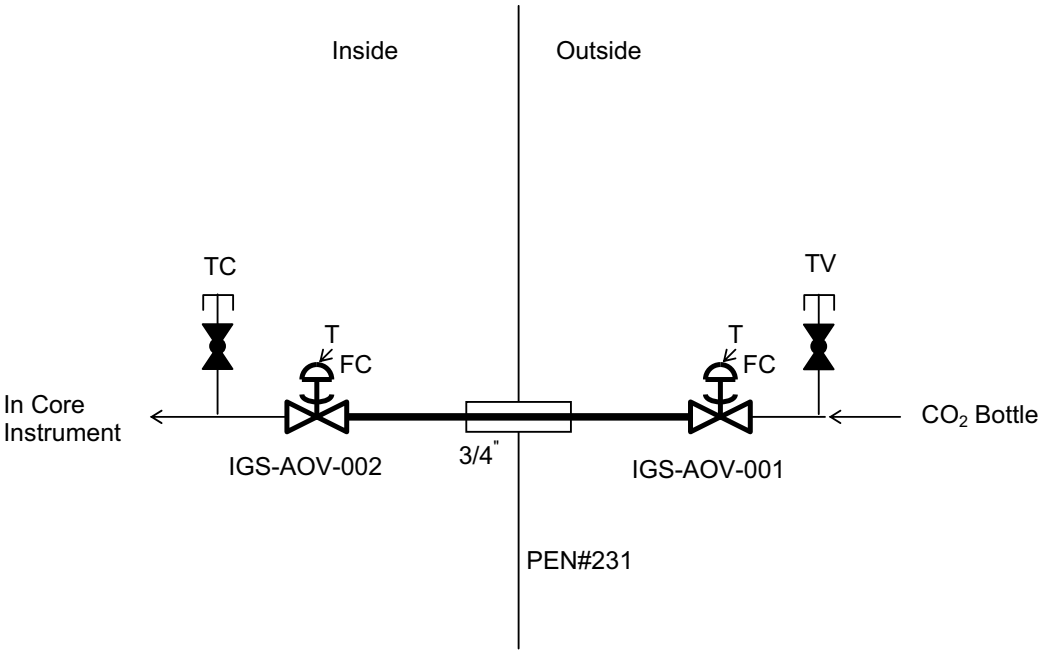

Figure 6.2.4-1 Containment Isolation Configurations (Sheet 45 of 52)

Containment Leak Rate Testing

Air Supply and Exhaust Line

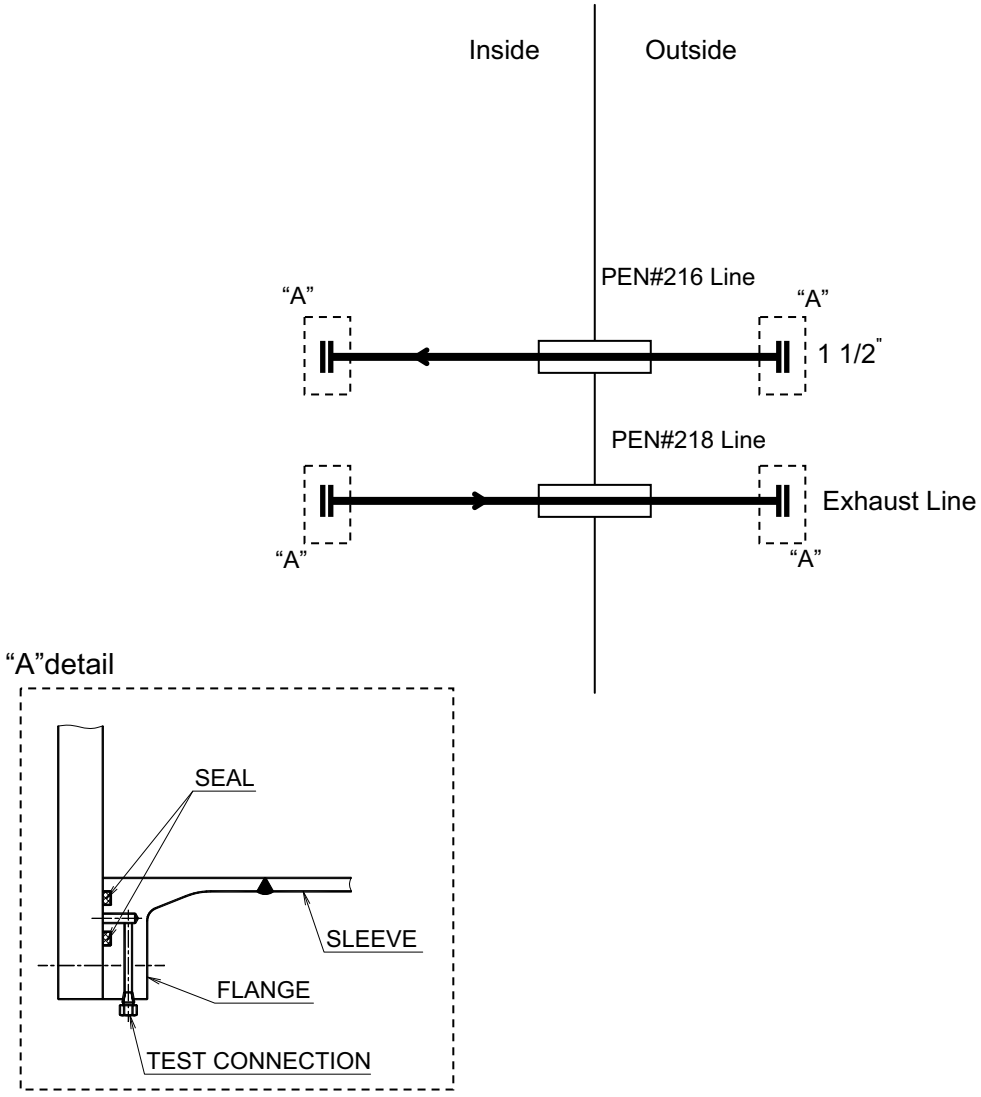

Figure 6.2.4-1 Containment Isolation Configurations (Sheet 46 of 52)

Containment Leak Rate Testing

Pressure Detection Line

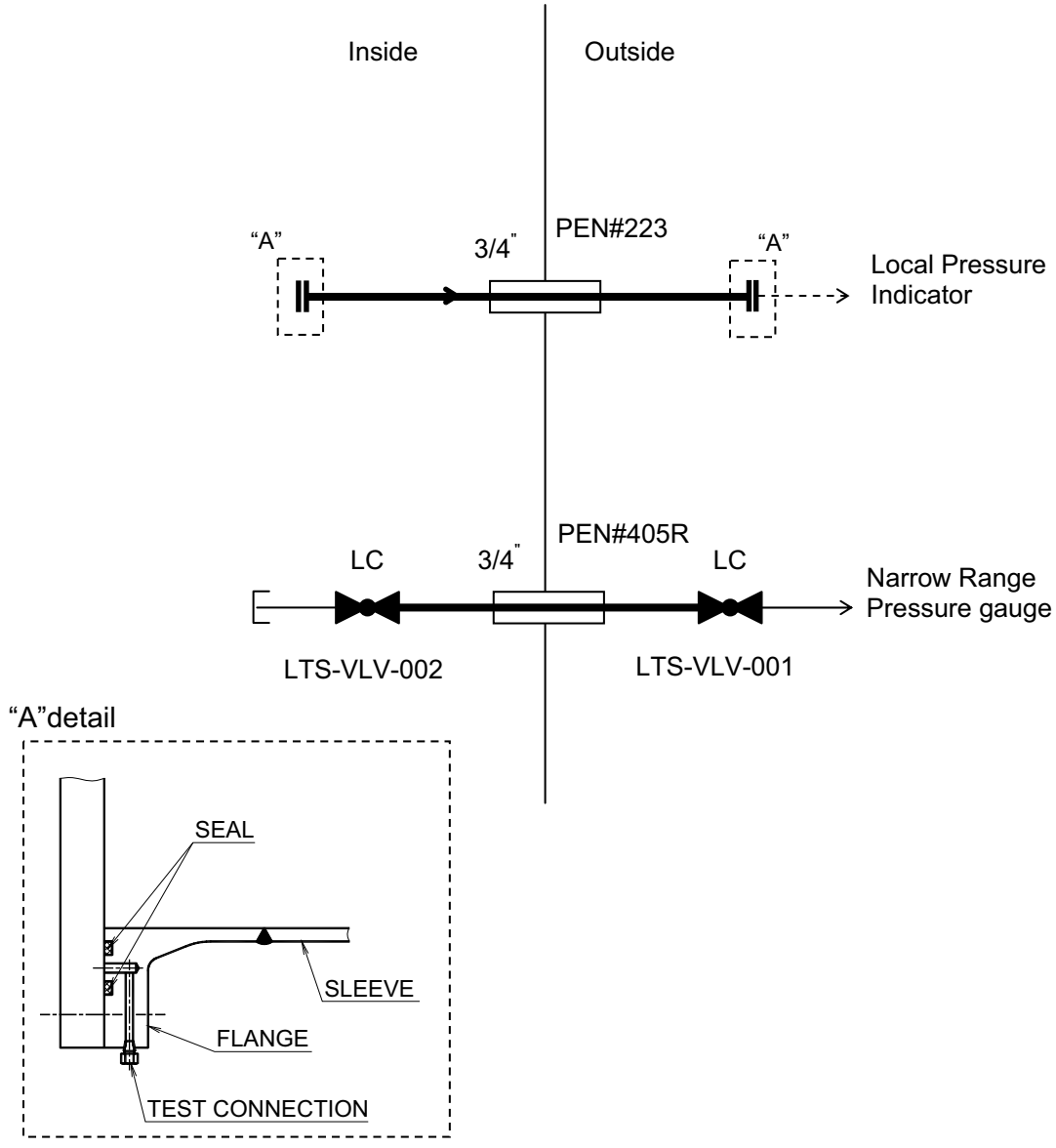

Figure 6.2.4-1 Containment Isolation Configurations (Sheet 47 of 52)

Others

Oil Supply and Drain Line for Reactor Coolant Pump Motor

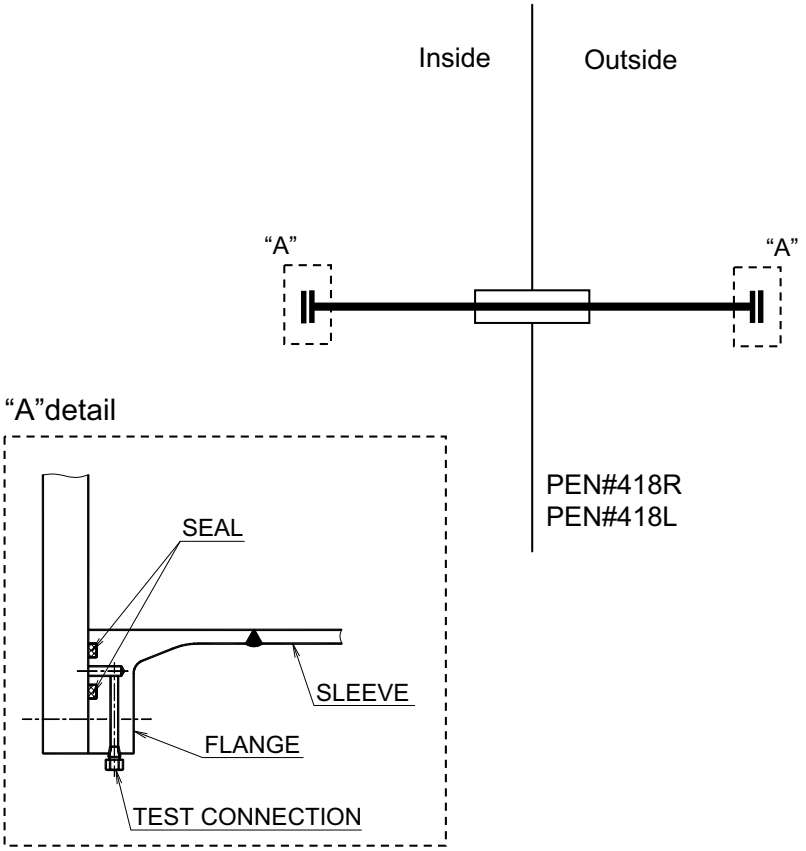

Figure 6.2.4-1 Containment Isolation Configurations (Sheet 48 of 52)

Others

Air Lock

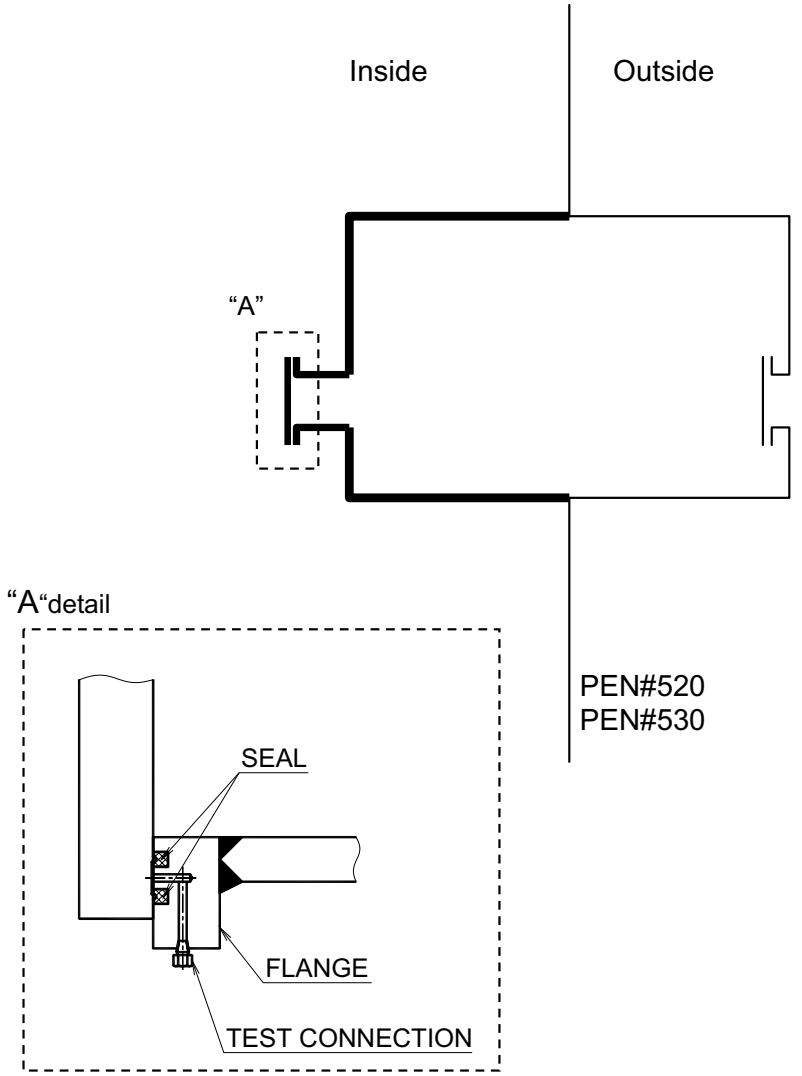

Figure 6.2.4-1 Containment Isolation Configurations (Sheet 49 of 52)

Others

Equipment Hatch

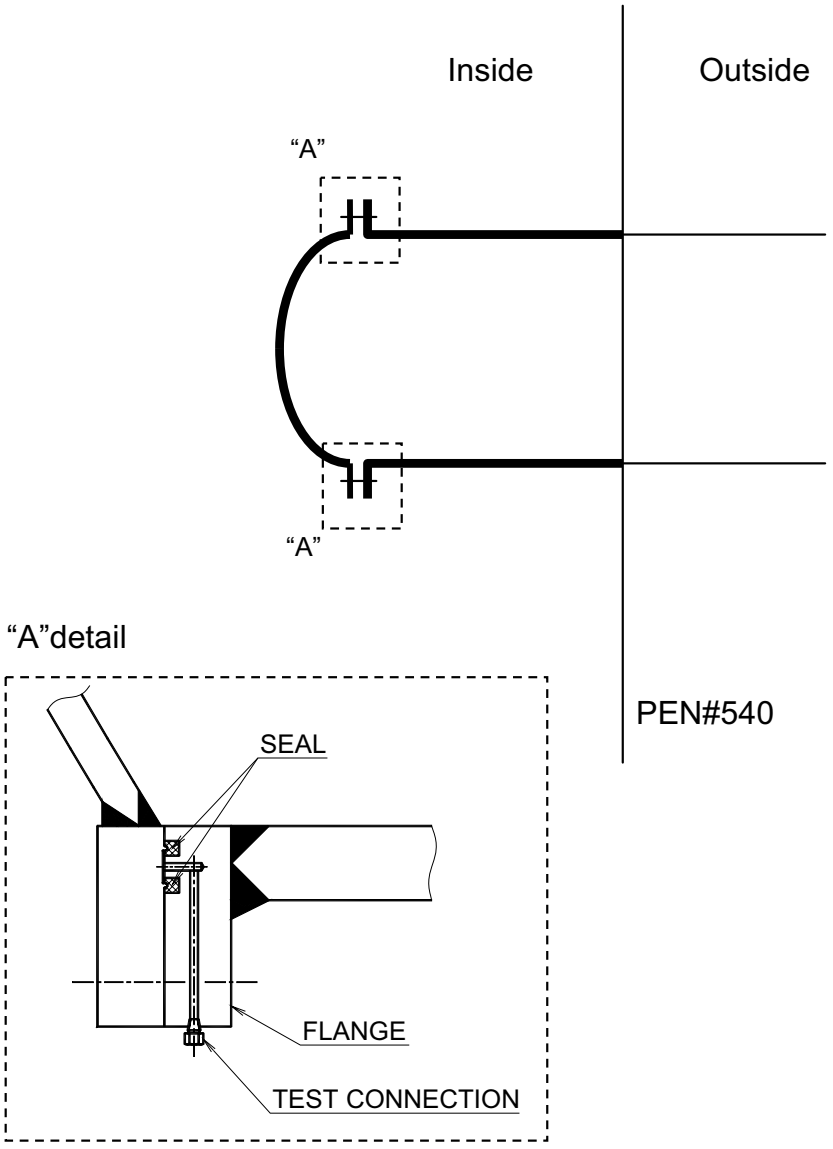

Figure 6.2.4-1 Containment Isolation Configurations (Sheet 50 of 52)

Others

Electrical Penetration

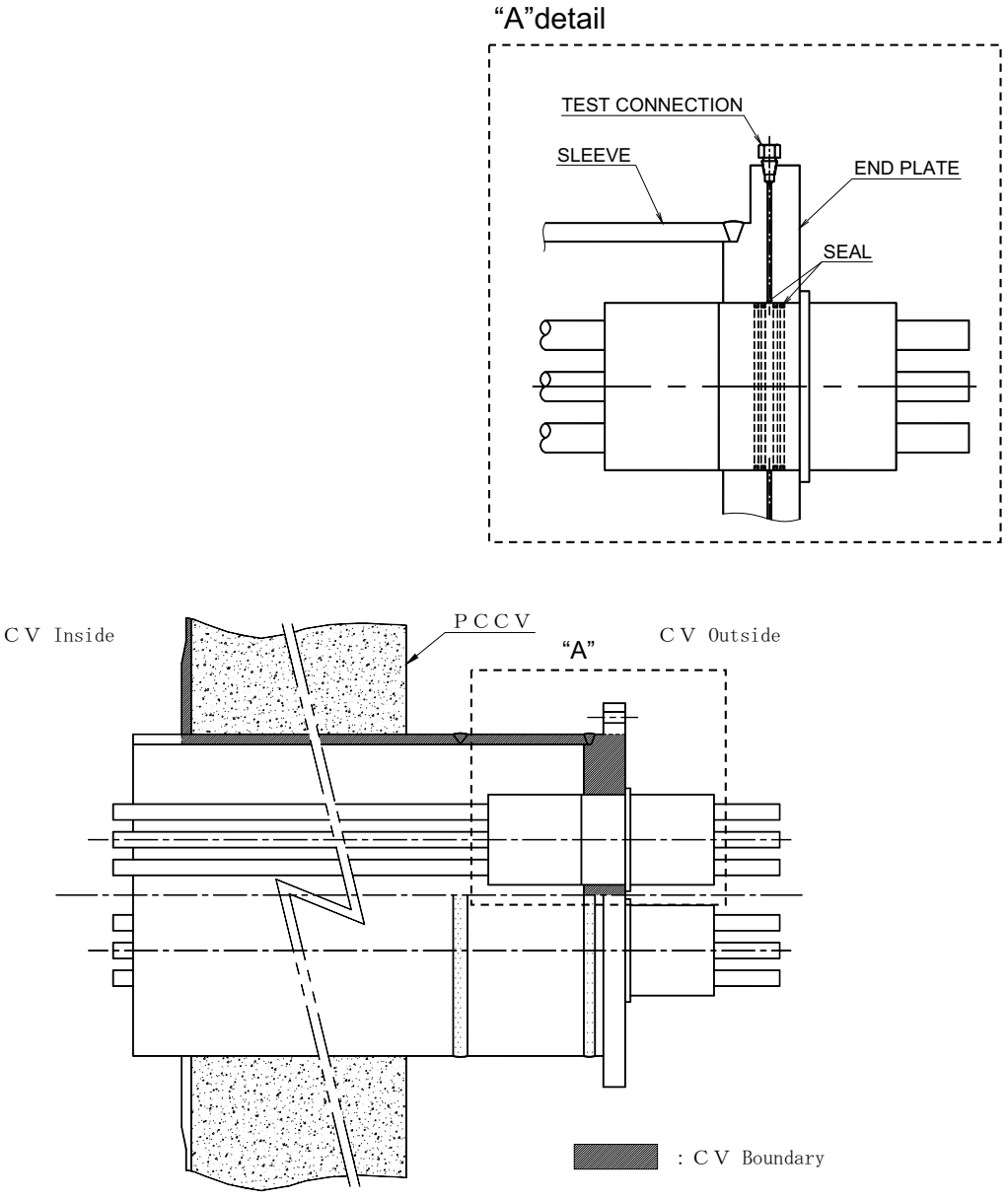

Figure 6.2.4-1 Containment Isolation Configurations (Sheet 51 of 52)

Others

Spare Penetration

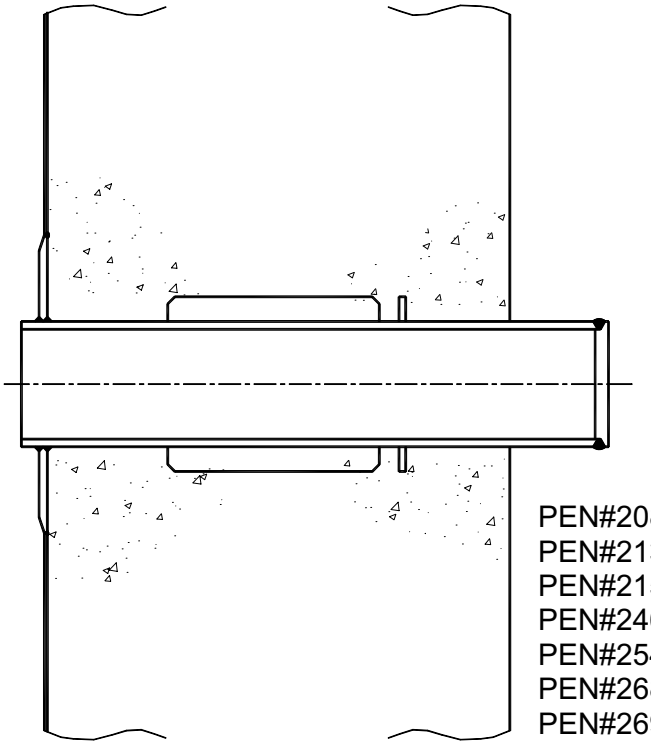

PEN#208
PEN#213
PEN#215
PEN#246
PEN#254
PEN#268
PEN#269L
PEN#275
PEN#285
PEN#301
PEN#406
PEN#407
PEN#419
PEN#420

Figure 6.2.4-1 Containment Isolation Configurations (Sheet 52 of 52)

DCD_19-560

Security-Related Information – Withheld Under 10 CFR 2.390

Figure 6.2.5-1 Containment Hydrogen Monitoring and Control System Schematic

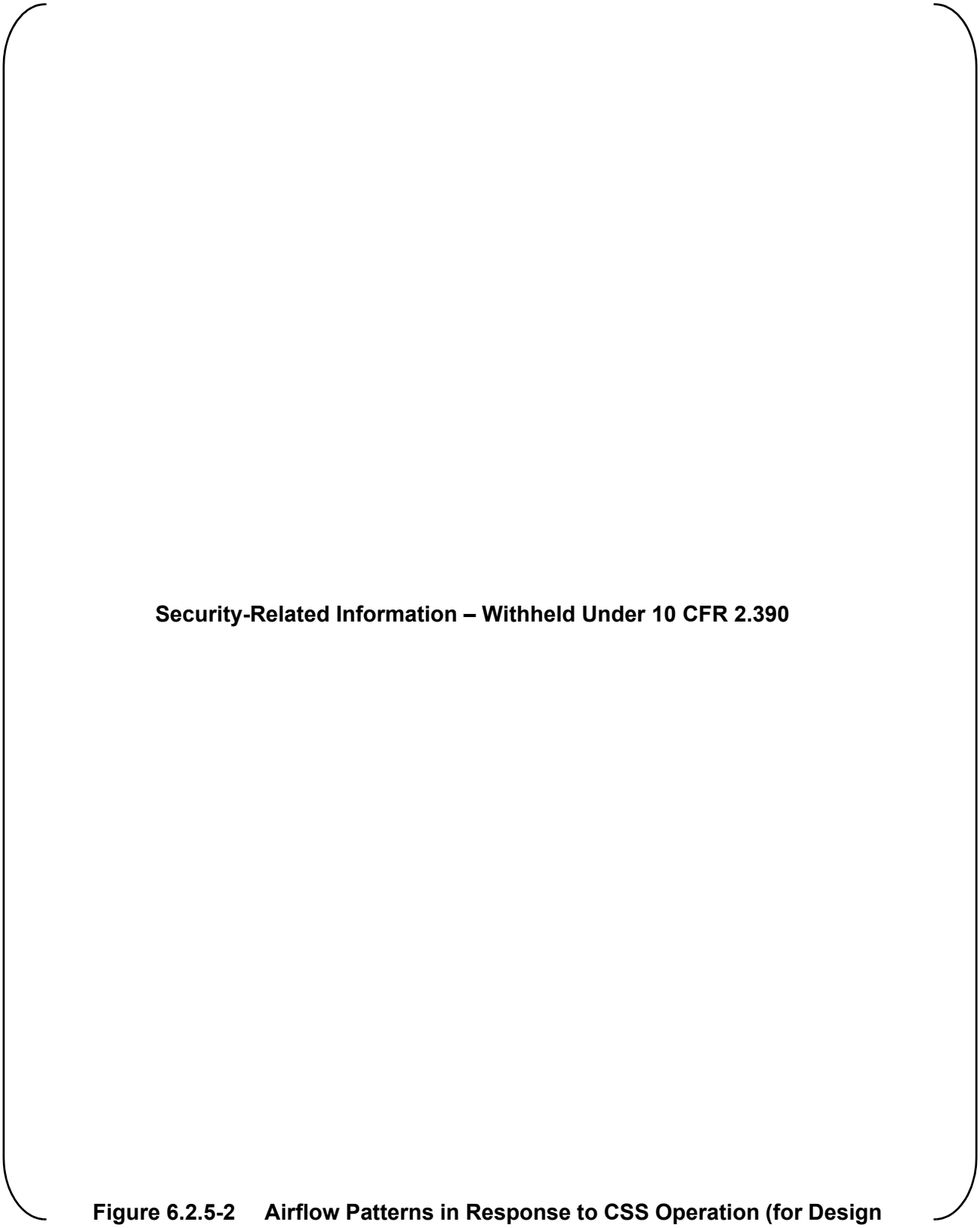

Figure 6.2.5-2 Airflow Patterns in Response to CSS Operation (for Design Evaluation of Hydrogen Monitoring and Control System)

6.3 Emergency Core Cooling Systems

6.3.1 Design Bases

The emergency core cooling system (ECCS) consists of the Safety Injection System (SIS), which includes the high head injection system, the accumulator system, and the emergency letdown system. The light-water reactor design of the US-APWR ECCS is similar to the RESAR SP/90. The NRC published a final safety evaluation report (NUREG-1413 [Ref. 6.3-1]) for the reference safety analysis report (RESAR) SP/90 in April 1991, and issued a preliminary design approval.

The ECCS is designed to perform the following major safety-related functions:

- Safety Injection
- Safe Shutdown
- Containment pH Control

These functions are provided by safety-related equipment with redundancy to deal with single failure, environmental qualification, and protection from external hazards.

6.3.1.1 Safety Injection

The primary function of the ECCS is to remove stored and fission product decay heat from the reactor core following an accident. The ECCS meets the acceptance criteria of 10 CFR 50.46(b) (Ref. 6.3-2) for the following items:

- Peak cladding temperature
- Maximum calculated cladding oxidation
- Maximum hydrogen generation
- Coolable core geometry
- Long-term cooling

The ECCS flow diagram is presented in Figure 6.3-1. The ECCS automatically initiates with redundancy sufficient to ensure these functions are accomplished, even in the unlikely event of the most limiting single failure occurring coincident with, or during the event.

The SIS, in conjunction with the rapid insertion of the control rod cluster assemblies (reactor scram), provides protection in the following events:

- LOCA
- Ejection of a control rod cluster assembly

- Secondary steam system piping failure
- Inadvertent opening of main steam relief or safety valve
- SG tube rupture

6.3.1.2 Safe Shutdown

The portions of the ECCS also operate in conjunction with the other systems of the cold shutdown design. The primary function of the ECCS during a safety grade cold shutdown is to ensure a means for feed and bleed for boration, and make up water for compensation of shrinkage. For boration and make up for compensation for shrinkage, operation of two trains of high-head injection system, each of which includes one safety injection pump and one flow control valve, are required. For letdown of reactor coolant, operation of one train of emergency letdown system including one flow control valve and one stop valve is required. Details of the safe shutdown design bases are discussed in Chapter 5, Subsection 5.4.7.

6.3.1.3 Containment pH Control

NaTB baskets are located in the containment and are capable of maintaining the desired post-accident pH conditions in the recirculation water. The pH adjustment is capable of maintaining containment water pH at least 7.0, to enhance the iodine retention capacity in the containment recirculation water and to avoid stress corrosion cracking of the austenitic stainless steel components.

6.3.1.4 Compliance with Regulatory Requirements

The ECCS design complies with relevant rules, regulations, and regulatory requirements, including the following:

1. GDC 2, “Design Bases for Protection Against Natural Phenomena”
2. GDC 4, “Environmental and Dynamic Effects Design Bases”
3. GDC 5, “Sharing of Structures, Systems, and Components”
4. GDC 17, “Electric Power Systems”
5. GDC 27, “Combined Reactivity Control Systems Capability”
6. GDC 35, “Emergency Core Cooling”
7. GDC 36, “Inspection of Emergency Core Cooling System”
8. GDC 37, “Testing of Emergency Core Cooling System”
9. 10 CFR 50.46, "Acceptance Criteria for Emergency Core Cooling Systems for Light-Water Nuclear Power Reactors"

Compliance with these GDCs is discussed in Chapter 3, Section 3.1. As for 10 CFR 50.46, it is described in Subsection 6.3.1.1.

The ECCS design meets relevant items of TMI Action Plan requirements specified in 10 CFR 50.34(f), as described in Table 6.3-1.

The ECCS design incorporates the resolutions of the relevant Unresolved Safety Issues, and medium- and high-priority Generic Safety Issues that are specified in the current version of NUREG-0933, as described in Table 6.3-2 and Table 6.3-3.

The ECCS design incorporates operating experience insights from Generic Letters and Bulletins, as described in Table 6.3-4.

6.3.1.5 Reliability Design Bases

The reliability of the ECCS has been considered in selection of the functional requirements, selection of the particular components and location of components, and connected piping. Redundant components are provided where the loss of one component would impair reliability. Redundant sources of the safety injection signal (S signal) are available so that the proper and timely operation of the ECCS is ensured. Sufficient instrumentation is available so that failure of an instrument does not impair readiness of the system. The active components of the ECCS are normally powered from separate buses which are energized from offsite power supplies. In addition, redundant sources of emergency onsite power are available through the use of the emergency power sources to ensure adequate power for all ECCS requirements. Each emergency power source is capable of providing sufficient power to all pumps, valves, and necessary instruments associated with one train of the ECCS.

The ECCS is located in the Reactor Building and the Containment. Both structures are seismic category I and provide tornado and hurricane missile barriers to protect the ECCS. The SIS receives normal power and is backed up with onsite Class 1E emergency electric power as noted in Chapter 8. The ECCS includes four 50% capacity SI pump trains. This design provides sufficient flow even if one train is out of service for maintenance and another one becomes inoperable due to a single failure upon the initiation of the ECCS. The SIS is designed with redundancy sufficient to ensure reliable performance, including the failure of any component coincident with occurrence of a design basis event, as discussed in Chapters 3, 7, and 15. One accumulator is provided for each loop. Accumulator sizing is based on three accumulators to account for loss of coolant from the accumulator installed on the broken loop during a LOCA. The spilled coolant from the accumulator on the broken loop does not contribute to the core injection. DCD_02-03 S01

Subsection 6.2.1, discusses the containment environmental conditions during accidents, and Chapter 3, Section 3.11, discusses the suitability of equipment for design environmental conditions. All valves required to be actuated during ECCS operation are located so as to prevent vulnerability to flooding.

Protection of the ECCS from missiles is discussed in Chapter 3, Section 3.5. Protection of the ECCS against dynamic effects associated with the rupture of piping is described in Section 3.6. Protection from flooding is discussed in Section 3.4.

6.3.2 System Design

6.3.2.1 Schematic Piping and Instrumentation Diagrams

Figure 6.3-1 is a simplified flow diagram of the ECCS. Figure 6.3-2 is the piping and instrumentation diagram showing system locations for all components, including system interconnections, instruments, alarms and indications. Chapter 7, Section 7.3, discusses the instrumentation and control, including the actuation logic, the component redundancy, the system interlocks, and the indication for the SIS.

6.3.2.1.1 High Head Injection System

There are four independent and dedicated SI pump trains. The SI pump trains are automatically initiated by a S signal, and supply boric acid water (at approximately 4,000 ppm boron) from the RWSP to the reactor vessel. Each 50% capacity train includes a safety injection pump suction isolation valve , a dedicated, 50% capacity SI pump, a safety injection pump discharge containment isolation valve, a direct vessel safety injection line isolation valve, and a hot leg injection isolation valve.

Figure 6.3-3 presents an elevation drawing of the SIS. System piping would normally be filled and vented from the RWSP to the reactor vessel injection nozzles at elevation 39 ft-3 in prior to startup. Thus, the injection piping is completely filled with water. A series of four check valves are installed between each SI pump and the direct vessel injection (DVI) nozzles at the reactor vessel. This series of check valves provides a “keep full” function, while preventing a drain-down to the RWSP. As shown, ~~24~~23 ft-~~2~~6 in ~~are~~is available between the 100% RWSP level at elevation ~~19~~20 ft-~~6~~2 in, and the highest SI piping at elevation 43 ft-8 in. Using a conservative value of 120°F, which is the maximum operating temperature in containment, a static head 30 ft. high is required for water column separation. Void formation due to water column separation in the SI piping is precluded and no delay is assumed between the system initiation and the injection flow into the reactor vessel downcomer. This design feature minimizes the potential for water hammer. Potential voids, caused by insufficient venting, may be formed in the SIS lines. The horizontal sections of the SIS piping are designed to have a continuous downward slope on the pump suction side and a continuous upward slope on the pump discharge side up to the full-flow test line. Vent valves are included at all local high points on horizontal sections and inverted-U piping sections and are designed to be accessible and identifiable. Inservice testing required by Subsection 3.9.6.2 includes periodic testing through the full-flow test lines located at the high point of the SIS and discharge into the RWSP. See Figure 6.3-3. These tests periodically discharge potential voids, minimize unacceptable dynamic effects such as water hammer, and ensure operability of the suction and injection lines. The vent and pipe slope design also facilitate system venting following maintenance procedures which are part of the operating procedures described in Subsection 13.5.2. The operating procedures described in Subsection 13.5.2 also describe surveillance procedures including surveillance locations, methods, and acceptance criteria to meet technical specifications for verifying that susceptible piping is sufficiently full of water.The ECCS delivery lag time is provided in Chapter 15, “Transient and Safety Analyses.” Table 6.2.1-5 provides ESF system parameter information relating to ECCS and CSS actuation timing.

MIC-03-06-00070

DCD_05.04.07-11

DCD_05.04.07-11

Each 50% capacity SI pump train is connected to a dedicated DVI nozzle for injection into the reactor downcomer region. The DVI nozzles are located at approximately the same vessel elevation as the reactor coolant hot and cold leg penetrations, but slightly below their nozzle centerline.

6.3.2.1.2 Accumulator System

There are four accumulators, one supplying each reactor coolant cold leg. The accumulators are vertically mounted cylindrical tanks located outside each SG/reactor coolant pump cubicle. The accumulators are passive devices. The accumulators are filled with boric acid water and charged with nitrogen. The accumulators discharge into the reactor cold leg when the cold leg pressure falls below the accumulator pressure.

The accumulators incorporate internal passive flow dampers, which function to inject a large flow to refill the reactor vessel in the first stage of injection, and then reduce the flow as the accumulator water level drops. When the water level is above the top of the standpipe, water enters the flow damper through both inlets at the top of the standpipe and at the side of the flow damper, and injects water with a large flow rate. When the water level drops below the top of the standpipe, the water enters the flow damper only through the side inlet, and injects water with a relatively low flow rate (Ref. 6.3-3).

The two series check valves in the supply line to the reactor cold leg are held closed by the pressure differential between the RCS and the accumulator charge pressure (approximately 1,600 pounds per square inch differential [psid]). The accumulator water level, boron concentration, and nitrogen charge pressure can all be remotely adjusted during power operations. The accumulators are non-insulated and assume thermal equilibrium with the containment normal operating temperature (approximately 70 to 120°F).

The accumulators are charged by a flow control valve in a common nitrogen supply line. The failure of the flow control valve is accommodated by a safety valve set at 700 psig and having a (nitrogen) flow capacity of 90,000 ft^3 per hour. Likewise, each accumulator is equipped with a safety valve set at 700 psig and (nitrogen) flow capacity of 90,000 ft^3 per hour, which provides a margin from the normal operating pressure (640 psig), yet precludes overcharging by the associated SI pump.

6.3.2.1.3 Emergency Letdown System

The emergency letdown system provides redundancy to the normal CVCS in achieving cold shutdown boration conditions. Two emergency letdown lines (one each from reactor hot legs A and D) direct reactor coolant to spargers in the RWSP. The SI pumps return more highly borated RWSP water (approximately 4,000 ppm boron) to the reactor vessel through each pump's DVI nozzle.

6.3.2.2 Equipment and Component Descriptions

6.3.2.2.1 Safety Injection Pumps

The SI pumps are horizontal, multi-stage centrifugal type pumps which are supplied with cooling water from the Component Cooling Water System (CCWS) and installed in the DCD_06.03-91

Safeguard Component Area in the reactor building. The design flow of the SI pumps is 1,540 gpm at 1,640 ft. design head. The pumps are made of stainless steel. Figure 6.3-4 presents the SI pump characteristic curve. Table 6.3-5 presents the relevant SI pump data. DCD_06.03-91

For an assumed large-break LOCA, the SI pumps are sized to deliver 2,113 gpm of injection flow following 180 seconds of small accumulator injection flow. The accumulator flow rates and sequence noted above, followed by this SI flow rate, ensure that the level in the reactor vessel downcomer is maintained for re-flooding the core. This SI pump flow rate is based on two SI pumps operating (active failure of one SI pump and one SI pump out of service), with each SI pump delivering 1,057 gpm against near atmospheric pressure.

For an assumed small-break LOCA, 757 gpm SI pump flow is required to maintain the core re-flooding conditions. This SI flow rate is maintained by one SI pump against 972 psig reactor pressure.

The design temperature of the SI pumps is 300°F, which is consistent with the design temperature of the containment. The RWSP, which is the water source of the SI pumps, is located in the containment. The design pressure of the SI pumps is 2,135 psig. This value provides margin to 2,028 psig, which is the sum of the design pressure of containment (68 psig) and the shutoff pressure of the SI pumps (1,960 psig).

During an accident, the CCWS supplying cooling water to the SI pumps is divided into four independent trains, and the failure of one CCWS train does not result in the simultaneous loss of function of more than two SI pumps. Also, during an accident, the Safeguard Component Area where the SI pump is installed is maintained in an adequate environmental condition by the Safeguard Component Area HVAC System. The Safeguard Component Area HVAC System consists of four trains of completely independent subsystems; therefore, the failure of one train does not result in simultaneous loss of SIS function of more than two trains. DCD_06.03-91

6.3.2.2.2 Accumulators

The accumulators are constructed of carbon steel and clad with stainless steel, have a design pressure of 700 psig (normal operating pressure of approximately 640 psig), and a design temperature of 300°F. Thus, injection is a passive function that occurs without a signal or an operator action when the reactor coolant pressure falls below the accumulator charge pressure. The accumulators are of a dual flow rate design; there is a large accumulator flow during blowdown and refill phase, followed by a small accumulator flow rate of longer duration to establish the core re-flood conditions in conjunction with the SI pumps. Figure 6.3-5 presents the accumulator flow schematic characteristics during the blowdown/refill and re-flood phase. Figure 6.3-6 presents a simplified view of the dual flow rate accumulator design. Table 6.3-5 presents the relevant accumulator data.

The capacity of the accumulators is based on the volume of the downcomer and lower plenum regions of the reactor vessel, which is approximately 2,295 ft^3. For analysis purposes, the volume assumed is approximately 2,613 ft^3, which includes a safety margin. Although four accumulators are provided, accumulator sizing is based on

three accumulators to account for unavailability of flow from the accumulator installed on the broken loop during a LOCA whose contents are assumed to spill to the containment so that it does not contribute to the core injection. One third of the remaining accumulator volume is also assumed to be lost to the spill through the postulated pipe break. Two thirds of the remaining accumulator volume is available for injection. The required capacity of each accumulator at the large injection flow rate is approximately 1,307 ft^3, which is increased to ~~approximately~~a nominal value of 1,342 ft^3 to include design margin. Uncertainty for switching between the large flow and small flow injection modes is also considered. Based on the water level uncertainty for switchover and nominal accumulator tank diameter given in Ref. 6.3-3, 15.2 ft^3 is included for switchover volume uncertainty. This gives a minimum required large flow injection volume for the as-built accumulators of 1326.8 ft^3. DCD_14.03.04-49

To maintain downcomer water level and establish post-LOCA core re-flood conditions, large accumulator injection flow is followed by an assumed 180 seconds of accumulator injection flow at a small flow rate (followed by the injection flow from the SI pumps). The required capacity of each accumulator at the small injection flow rate is approximately 724 ft^3, which is increased to approximately 784 ft^3 (Ref. 6.3-3).

The volume of each accumulator (2,126 ft^3) includes the volume (1,342 ft^3 plus 784 ft^3) associated with both the large and small injection flow rates, respectively. Considering the total water volume (2,126 ft^3) and adding the volume of gas space and dead water volume, the required volume of a single accumulator is 3,180 ft^3 (Ref. 6.3-3).

The design temperature of the accumulator is 300°F which is consistent with the design temperature of the containment where the accumulators are located. The design pressure of the accumulator is 700 psig. This value provides margin to the normal operating pressure (i.e., nitrogen pressure) of 640 psig.

The flow rate coefficient and uncertainty of the flow damper is described in Ref. 6.3-3 and Ref. 6.3-4.

6.3.2.2.3 Refueling Water Storage Pit

The RWSP is designed to have a sufficient inventory of boric acid water for refueling and long-term core cooling during a LOCA. ~~A minimum of 81,230~~84,750 ft^3 ~~of available water~~ is required in the RWSP. Sufficient submerged water level is maintained to secure the minimum NPSH for the SI pumps. The RWSP capacity includes an allowance for instrument uncertainty and the amount of holdup volume loss within the containment. The capacity of the RWSP is optimized for a LOCA in order to prevent an extraordinarily large containment. Therefore, a refueling water storage auxiliary tank containing 29,410 ft^3 is provided separately outside the containment to ensure that the required volume for refueling operations is met. Table 6.3-5 presents the relevant RWSP data. Detail description of structure and capacity of RWSP is provided in Subsection 6.2.2.2. MIC-03-06-00070

The temperature during normal operation is in a range of 70 to 120°F. ~~The peak temperature following a LOCA is approximately 250°F.~~The peak temperature following a LOCA is 256°F, and the maximum design temperature is 270°F. MIC-03-06-00051 MIC-03-06-00070

The boric acid water in the RWSP is purified using the refueling water storage system (RWS). The RWS is shown in Figure 6.3-7 and may be cross-connected to one of two SFPCS filter and demineralizer vessels to remove the solid materials and the dissolved impurities for purification. The capacity of the purification subsystem is designed to maintain the chemistry of the spent fuel pool, the refueling cavity, the refueling water storage auxiliary tank, and the RWSP. Chapter 9, Subsection 9.1.3, discusses the SFPCS purification of the boric acid water.

6.3.2.2.4 ECC/CS Strainers

Four independent sets of strainers are provided inside the RWSP as part of the ECCS and CSS. ECC/CS strainers are provided for preventing debris from entering the safety systems, which are required to maintain the post-LOCA long-term cooling performance. ECC/CS strainers are designed to comply with RG 1.82. Strainer compliance with RG 1.82 is discussed in Subsection 6.2.2.2.6.

The RWSP is located at the lowest part of the containment in order to collect containment spray water and blowdown water by gravity. It is compartmentalized by a concrete structure against the upper containment area. Connecting pipes that drain the collected water from the upper containment are provided in the ~~ceiling of the RWSP~~reactor cavity and header compartment. The fully submerged strainers are installed on the bottom floor of the RWSP inside containment at elevation 3 ft. - 7 in. Below the strainers at elevation 3 ft. - 7 in. is the bottom of the RWSP sumps. Table 6.3-5 presents relevant ECC/CS strainer data. MIC-03-06-00070

The fully submerged strainers, in combination with the SI pump elevation, provide sufficient NPSH to ensure continuous suction availability without cavitation during all postulated events requiring the actuation of the ECCS.

The strainer sizing accommodates the estimated amount of debris potentially generated in containment. (Subsection ~~6.2.2.26~~6.2.2.2.6) MIC-03-06-00052

The Sump Strainer Performance Evaluation document (Ref. 6.2-34) evaluates parameters described in the SE of the NEI 04-07 (Ref. 6.2-24). Reference 6.2-36 provides additional detailed evaluation of downstream effects potentially impacting the safety functions associated with pumps, valves, heat exchangers, instrumentation (sensing lines and flow measuring devices), spray nozzles, reactor vessel flow paths. Evaluation of downstream effects is described in the report "Sump Strainer Downstream Effects" (Ref: 6.2-36). MIC-03-06-00053

6.3.2.2.5 NaTB Baskets and NaTB Basket Containers

Crystalline NaTB additive is stored in the containment and is used to raise the pH of the RWSP from 4.3 to at least 7.0 post-LOCA. The chemical composition of NaTB is $Na_2B_40_7 \cdot 10\ H_20$. (Sodium tetra-borate decahydrate is also known as “borax” and can be written $B_4O_7Na_2 \cdot 10\ H_20$.)

The total weight of NaTB contained in the baskets is at least 44,100 pounds to raise the pH of the borated water in the containment following an accident to at least 7.0.

Twenty-three NaTB baskets are placed in the containment to maintain the desired post-accident pH conditions in the recirculation water. The buffering agent is mixed with the recirculation water in the containment so that the desired post-accident pH conditions in the recirculation water is maintained.

Twenty three NaTB baskets are divided and installed into three NaTB basket containers. Figure 6.3-8 and Figure 6.3-9 are the plan and sectional views of the NaTB baskets and NaTB basket containments installation, which are located on the maintenance platform in the containment at elevation 121 ft. - 5 in. The upper lips of the NaTB Basket Containers are approximately 1 ft. - 7 in. above the top of the NaTB baskets. This allows for the full immersion of the baskets and the optimum NaTB transfer to the RWSP.

The NaTB basket containers include the following number of NaTB baskets:

- Container A: Nine NaTB baskets
- Container B: Seven NaTB baskets
- Container C: Seven NaTB baskets

The top face of each container is open to receive spray water from the CSS nozzles during an accident and, after a period-of-time, each container is filled with spray water. As shown in Figure 6.3-9, spray ring D is located directly above the NaTB baskets at elevation 131 ft. - 6 in. Figure 6.3-10 and Figure 6.3-11 present the plan and sectional views of the spray distribution, coverage patterns, and spray trajectories for the NaTB baskets. Subsection 6.2.2 provides a discussion of the CSS.

~~The top face of the refueling cavity is open and blanketed by the containment spray during an accident. The spray water, which flows into the refueling cavity, is drained through the two refueling cavity drain pipes to the RWSP.~~ MIC-03-06-00070

NaTB in baskets is dissolved in spray water in the containers. The solution containing NaTB is discharged from each container to the RWSP through ~~4-inch diameter~~ NaTB solution transfer pipes. ~~NaTB solution transfer pipes connect to the 8-inch diameter refueling cavity drain pipes at the inlet of the RWSP and the solution flows into the RWSP after being mixed and diluted by the water drained from the refueling cavity.~~ Figure 6.3-12 shows the NaTB solution transfer piping. This piping transfers NaTB solution to the RWSP by gravity. MIC-03-06-00070

The size of the NaTB transfer pipes ~~and refueling cavity drain pipes~~ are selected to minimize the head loss during a transfer of solution. The containerized NaTB solution overflows at the same flow rate as the spray water that flows into the container. Therefore, the NaTB dissolved in the container flows into the RWSP without losses from spilling over onto the containment operating floor. The dissolution time of the NaTB is approximately 12 hours. MIC-03-06-00070

The design temperature of the baskets and containers is 300°F, which is consistent with the design temperature of the containment, where the baskets and containers are located. The design pressure of the baskets and containers is atmospheric pressure.

The baskets and containers are not closed vessels, but are open to containment atmosphere.

6.3.2.2.6 Major Valves

Containment isolation is discussed in Subsection 6.2.4. Control (including interlocks) and automatic features of containment isolation valves are discussed in Chapter 7, Section 7.3.

6.3.2.2.6.1 Safety Injection Pump Suction Isolation Valve

There is a normally open motor-operated gate valve in each of the four SI pump suction lines from the RWSP. These valves remain open during normal and emergency operations. The valves are remotely closed by operator action from the MCR and RSC only if an SIS line has to be isolated from the RWSP to terminate a leak or if pump/valve maintenance specifically requires it. The open or closed valve position, for these valves, is indicated in the MCR and RSC. The four safety injection pump suction isolation valves (SIS-MOV-001A, B, C, and D) are Equipment Class 2, seismic category I.

6.3.2.2.6.2 Safety Injection Pump Discharge Containment Isolation Valve

There is a normally open motor-operated gate valve in each pump discharge line that serves as the outboard containment isolation valve. These valves can be closed remotely by operator action from the MCR and RSC if containment isolation is required. The open or closed valve position, for these valves, is indicated in the MCR and RSC. The four safety injection pump discharge containment isolation valves (SIS-MOV-009A, B, C, and D) are Equipment Class 2, seismic category I.

6.3.2.2.6.3 Direct Vessel Safety Injection Line Isolation Valve

There is a normally open motor-operated globe valve, with throttling capability, which can control the flow downstream of each of the four DVI lines inside the containment. The valves are remotely closed for switchover to the hot leg injection by operator action from the MCR and RSC in the event of a LOCA. These valves provide the capability to control the SI pump flow to maintain the RCS inventory during safe shutdown. The open or closed valve position, for these valves, is indicated in the MCR and RSC. The four direct vessel safety injection line isolation valves (SIS-MOV-011A, B, C, and D) are Equipment Class 2, seismic category I.

6.3.2.2.6.4 Hot Leg Injection Isolation Valve

There is a normally closed motor-operated globe valve in each of the four hot leg injection lines. These valves are remotely opened by operator action from the MCR and RSC to initiate hot leg injection. The open or closed valve position, for these valves, is indicated in the MCR and RSC. The four hot leg injection isolation valves (SIS-MOV-014A, B, C, and D) are Equipment Class 1, seismic category I.

6.3.2.2.6.5 Safety Injection Pump Full-flow Test Line Stop Valve

One normally closed motor-operated globe valve, with a throttling capability, is installed in each of four SI pump test lines. These valves have their control power locked out during normal plant operation. The test lines are located inside the containment and are routed from the pump test discharge lines to the RWSP.

These valves are remotely opened by operator action from the MCR and RSC when the pumps are aligned for pump full-flow test. The open or closed valve position, for these valves, is indicated in the MCR and RSC. The four safety injection pump full-flow test line stop valves SIS-MOV-024A, B, C, and D are Equipment Class 2, seismic category I.

6.3.2.2.6.6 Accumulator Discharge Valve

There is a normally open motor-operated gate valve, which has its control power locked out during normal plant operation, in each of the four accumulator discharge lines. These valves are closed only during normal shutdown operation (prior to reducing pressure below 1,000 psig) to prevent the accumulator from inadvertently discharging into the RCS during cooldown. All four accumulators are assumed ready to inject when the RCS is pressurized. The open or closed valve position, for these valves, is indicated in the MCR and RSC. The four accumulator discharge valves (SIS-MOV-101A, B, C, and D) are Equipment Class 2, seismic category I.

These valves are remotely opened during startup by operator action from the MCR and RSC when the RCS pressure increases above the SI un-blocking pressure. If the RCS pressure is above the P-11 setpoint and these valves are closed, an alarm is received in the MCR and RSC, and these valves are automatically opened. A confirmatory-open interlock is provided to automatically open the valves upon the receipt of a S signal to ensure that the valves are opened, aligning the SI flowpath following an accident. The accumulators are then capable of passively initiating SI if the RCS pressure decreases below accumulator pressure.

6.3.2.2.6.7 Accumulator Nitrogen Supply Line Isolation Valve

There is a normally closed motor-operated globe valve in each of the accumulator nitrogen supply lines in the containment. These valves may be opened by operator action from the MCR and RSC when the nitrogen system is charged. These valves are also opened when the accumulator is depressurized with the opening of the accumulator nitrogen discharge valve in Subsection 6.3.2.2.6.9 below. The open or closed valve position, for these valves, is indicated in the MCR and RSC. The four accumulator nitrogen supply line isolation valves (SIS-MOV-125A, B, C, and D) are Equipment Class 2, seismic category I.

6.3.2.2.6.8 Accumulator Nitrogen Discharge Pressure Control Valve

There is an air-operated vent valve in the nitrogen supply header inside the containment. This valve may be opened by operator action from the MCR and RSC to discharge nitrogen gas from an accumulator to containment. The open or closed valve position is

indicated in the MCR and RSC. The accumulator nitrogen discharge pressure control valve (SIS-HCV-017) fails closed and is Equipment Class 2, seismic category I.

6.3.2.2.6.9 Accumulator Nitrogen Discharge Valve

Two normally closed motor-operated globe valves are installed in the accumulator nitrogen supply line to discharge nitrogen gas from the accumulators to the containment. If an accumulator discharge valve is not closed during safe shutdown due to a single failure, this valve can be manually opened by operator action from the MCR and RSC, depressurizing the accumulator to prevent the accumulator from inadvertently discharging nitrogen gas into the RCS. The open or closed valve position, for these valves, is indicated in the MCR and RSC. The two accumulator nitrogen discharge valves (SIS-MOV-121A and B) are Equipment Class 2, seismic category I.

6.3.2.2.6.10 Accumulator Nitrogen Supply Pressure Control Valve

An air-operated modulating globe valve is located in the accumulator nitrogen supply header outside the containment. The valve automatically controls the pressure of nitrogen gas supplied from the plant gas system to the accumulators. The accumulator nitrogen supply pressure control valve (SIS-PCV-016) fails closed and is Equipment Class 8, Non-seismic category.

6.3.2.2.6.11 Safety Injection Pump Accumulator Makeup Valve

One normally closed air-operated globe valve, which has its control power locked out, is located in each of the two accumulator makeup lines which branches downstream of the containment isolation check valves in two of the four SI pump discharge lines. The valves are opened by operator action from the MCR and RSC, when required to provide makeup borated water to the accumulators. The open or closed valve position, for these valves, is indicated in the MCR and RSC. The safety injection pump accumulator makeup valves (SIS-AOV-201B and C) fail closed and are Equipment Class 2, seismic category I.

6.3.2.2.6.12 Accumulator Makeup Valve

There is a normally closed air-operated valve in each of the four accumulator makeup lines. The valves are opened by operator action from the MCR and RSC, when required to provide makeup boric acid water to the respective accumulator. The open or closed valve position, for these valves, is indicated in the MCR and RSC. The accumulator makeup valves (SIS-AOV-215A, B, C, and D) fail closed and are Equipment Class 2, seismic category I.

6.3.2.2.6.13 Accumulator Makeup Flow Control Valve

There is an air-operated modulating globe valve in the accumulator makeup line. This valve may be controlled by operator action from the MCR and RSC to provide makeup borated water to the respective accumulator. The open or closed valve position is indicated in the MCR and RSC. The one accumulator makeup flow control valve SIS-HCV-089 fails closed and is Equipment Class 8, Non-seismic category.

6.3.2.2.6.14 Accumulator Nitrogen Supply Header Safety Valve

A safety valve is located on the accumulator nitrogen supply header inside the containment. Its size and setpoint are selected to protect the piping and accumulator from over-pressure due to the mis-operation of the accumulator nitrogen supply control valve. The accumulator nitrogen supply header safety valve (SIS-SRV-116) is Equipment Class 2, seismic category I.

6.3.2.2.6.15 Accumulator Safety Valve

A safety valve is provided for each accumulator to prevent over-pressure due to either a RCS back-leakage during normal operation or mis-operation of the SI pump during accumulator filling or makeup. The accumulator safety valves (SIS-SRV-126A, B, C, and D) are Equipment Class 2, seismic category I.

6.3.2.2.6.16 Accumulator Injection Line Check Valve

Two swing check valves in series are aligned in each accumulator injection line. The first valve serves to prevent the flow from the RCS into the accumulator portion of the SIS. The second valve serves as a backup in the event that the first valve develops a leakage through the valve seating surfaces. The 1st and 2nd accumulator injection line check valves (SIS-VLV-102A, B, C, and D) and (SIS-VLV-103A, B, C, and D) are Equipment Class 1, seismic category I.

6.3.2.2.6.17 Emergency Letdown Line Isolation Valve

One normally closed motor-operated gate valve and one normally closed motor-operated globe valve in series are aligned in each of two emergency letdown lines. These valves are remotely opened by operator action from the MCR and RSC during a safe shutdown for a feed and bleed emergency letdown/boration with the SI pump operation. The open or closed valve position, for these valves, is indicated in the MCR and RSC. The 1st and 2nd emergency letdown line isolation valves (SIS-MOV-031A, D and SIS-MOV-032A, D) are Equipment Class 1, seismic category I. 2nd. Emergency Letdown Line Isolation Valves (SIS-MOV-032A and D) have the throttling capability to enable the control of letdown flow rate.

The emergency letdown feature of the SIS directs the reactor coolant to the spargers in the RWSP. As discussed above, the SI pumps return more highly borated RWSP water (approximately 4,000 ppm boron) to the reactor vessel.

6.3.2.2.6.18 Safety Injection Pump Discharge Containment Isolation Check Valve

One swing check valve is aligned in each safety injection pump discharge line as a containment isolation valve. The safety injection pump discharge containment isolation check valves (SIS-VLV-010A, B, C and D) are Equipment Class 2, seismic category I.

6.3.2.2.6.19 Accumulator Nitrogen Supply Containment Isolation Check Valve

One swing check valve is aligned in the accumulator nitrogen supply line as a containment isolation valve. The accumulator nitrogen supply containment isolation check valve (SIS-VLV-115) is Equipment Class 2, seismic category I.

6.3.2.2.6.20 Accumulator Nitrogen Supply Containment Isolation Valve

One normal closed air operated globe valve is aligned in the accumulator nitrogen supply line as a containment isolation valve. The valve is closed automatically on receipt of a containment phase "A" isolation signal. The open or closed valve position is indicated in the MCR and RSC. The accumulator nitrogen supply containment isolation valve (SIS-AOV-114) is Equipment Class 2, seismic category I.

6.3.2.2.6.21 Direct Vessel Injection Line Check Valve

Two swing check valves in series are aligned in each direct vessel injection line. The 1st and 2nd direct vessel injection line check valves (SIS-VLV-012A, B, C, and D) and (SIS-VLV-013A, B, C, D) are Equipment Class 1, seismic category I.

6.3.2.2.6.22 Hot Leg Injection Check Valve

One swing check valve is aligned in each hot leg injection line. The hot leg injection check valves (SIS-VLV-015A, B, C and D) are Equipment Class 1, seismic category I.

6.3.2.2.6.23 Safety Injection Pump Discharge Check Valve

One swing check valve is aligned in each safety injection pump discharge line. The valve serves to prevent discharge line drain-down. The safety injection pump discharge check valves (SIS-VLV-004A, B, C and D) are Equipment Class 2, seismic category I.

6.3.2.3 Applicable Codes and Classifications

Design codes and classifications applicable to the SIS are described in Chapter 3, Sections 3.2. ECCS are seismic category I as required by 10 CFR 50, Appendix A, GDC 2.

The design and classification of instrumentation and controls applicable to the SIS are described in Chapter 7, "Instrumentation and Controls."

6.3.2.4 Material Specifications and Compatibility

All surfaces of the SIS in contact with borated reactor coolant, or a mixture of borated reactor coolant and NaTB, are austenitic stainless steel. The nitrogen supply piping is carbon steel. The accumulator vessels are stainless clad carbon steel. The surfaces of SIS valve seating are hard-faced to prevent failure and to reduce wear. In addition, valve stem materials are selected considering corrosion resistance, high-tensile properties and resistance to surface scoring by packing. The complete material specifications are

presented in Section 6.1. System and component purchasing and procurement activities are performed within the guidelines provided by Chapter 17, “Quality Assurance.”

Acid is formed under the influence of radiation during accident, that is, chlorine contained in jackets covering the insulation cables inside the containment undergoes radiolysis to generate hydrochloric acid. This acid formed after accident occurrence is taken into account for estimation of NaTB quantity described in Subsection 6.3.2.5.

6.3.2.5 System Reliability

Reliability of the SIS is considered in the design, procurement, and installation/layout of components. Chapter 17 discusses Quality Assurance (QA) during design, construction and operation. Four independent and passive accumulators are provided, as well as four 50% capacity SI pump trains. Complete redundancy is provided, including dedicated SI pumps supplying direct reactor vessel SI. The SI equipment trains are completely separated, both by the location of the major components, and by the sources and routings of the electrical and control power. The emergency power sources supply electrical power to the required equipment of the SIS so that the specified safety functions are maintained during a loss of offsite power (LOOP).

The ECCS is designed to be operated with a minimum number of active components being needed to accomplish SI. The SIS is in standby service during normal plant operation, which includes both power generation and hot standby modes. The SI pumps are in standby, ready for automatic initiation, with the pumps taking suction from the RWSP and injecting into the RCS through the DVI nozzles. The accumulators are in standby, aligned for passive actuation of injection to the RCS cold legs if the RCS pressure decreases below the accumulator pressure.

Each SI pump train discharge containment isolation valve is normally open. The system is designed with suitable capacity and redundancy for single failure considerations, as well as an unavailable train (e.g., maintenance). Chapter 15, Subsection 15.0.0.4, discusses single active failure and potential passive failure and their application to event analysis. Table 6.3-6 presents a failure modes and effect analysis for the ECCS.

During long term cooling, the most limiting active failure, or a single passive failure, equal to the leakage that would occur from a valve or pump seal failure, may occur. Leakage is detected and alarmed in the MCR. The SIS consists of four separate 50% capacity trains. The ECCS performance objectives are achieved by isolation of the affected train.

As noted in Chapter 7, separate, independent, and redundant system initiating detectors and instrument racks are located in, around, and outside the containment structure. Instrument wiring is routed through widely separated and protected cable trays to initiate and control SI functions. Similarly, highly reliable separate, independent, and redundant power sources are available for instrumentation and prime movers (SI pump motors).

Chapter 14 discusses the construction and pre-operational testing, as well as system and integrated tests performed prior to commencement of full power. Further, component and system reliability is enhanced by inservice pump and valve testing required by Chapter 16, “Technical Specifications.”

Requirements for functional testing of ECCS valves and pumps are provided in Subsection 3.9.6. SI pump head is periodically verified as required by the Technical Specifications, SR 3.5.2.3, and SR 3.5.3.1. Implementation of inservice test programs is described in Subsection 13.4.

MUAP-08013-P (Ref. 6.2-36) contains requirements for design and evaluation of ECCS and CSS ex-vessel downstream components to ensure the ECCS and CSS systems and their components will operate as designed under post-LOCA conditions. DCD_06.02.02-84

The SI pump capability during minimum flow rate conditions is confirmed during the functional qualification and Inservice Testing Program as discussed in Subsection 3.9.6.1 and 3.9.6.2, respectively. DCD_06.03-103

6.3.2.6 Protection Provisions

As noted above, many and varied provisions are provided to protect the ECCS. The details are provided in the following Chapters and sections:

- Internal flooding is discussed in Chapter 3, Section 3.4
- Missile protection is discussed in Chapter 3, Section 3.5
- Protection against dynamic effects is discussed in Chapter 3, Section 3.6
- Seismic analysis, design and qualification are discussed in Chapter 3, Sections 3.7 and 3.10
- Dynamic analysis and testing (e.g., vibration, thermal expansion) are discussed in Chapter 3, Section 3.9
- Environmental qualification is discussed in Chapter 3, Section 3.11

6.3.2.7 Provisions for Performance Testing and Inspection

The ECCS is designed with suitable provisions that facilitate component and system performance testing. Minimum flow and full-flow test piping allow for pump testing during power operation and shutdown modes. Local instruments, test, and sample connections also support performance testing and inspection.

6.3.2.8 Manual Actions

Under LOCA conditions no operator action is required, with the exception of hot leg injection switchover. Switchover from the refueling water storage tank , in the traditional PWR, to recirculation mode is not required and the ECCS actuation signal actuates the ECCS automatically, without need for operator action.

Under normal operations, charging the accumulators (through the SI pumps) and pressurizing the accumulators with nitrogen are manual operations. Prior to the reducing reactor pressure below 1,000 psig for shutdown, the normally-open gate valve in each accumulator's discharge line is closed by remote manual operation to prevent an

unintended discharge into the RCS. These valves are re-opened during startup when the reactor pressure is increased above the SI reset (un-blocking) pressure.

During safe shutdown, operator closes remotely the accumulator discharge valves by the operator's manual action before the RCS pressure decreases to the accumulator operating pressure in order to prevent the discharge of nitrogen from accumulators to the RCS. If the accumulator discharge valve could not be closed due to a single failure, operator opens remotely the accumulator nitrogen supply line isolation valve and the accumulator nitrogen discharge valve by the operator's manual action, and discharges the nitrogen in the accumulator to containment atmosphere and depressurizes the accumulator.

Operators can align any SI pump's discharge flow between the reactor vessel downcomer (normal SI flow path) and the associated reactor hot leg. Such "hot leg injection" flow prevents excessive boric acid concentration in the reactor core during long-term cooling. Hot leg injection flow is established by closing any direct vessel safety injection line isolation valve and opening the associated hot leg injection isolation valve. The valves are manually operated remotely from the MCR.

Operators manually initiate emergency letdown from the MCR. Reactor pressure is lowered by opening the safety depressurization valves, then the emergency letdown line isolation valves between the reactor hot leg A or D and the RWSP are opened. Borated water (at approximately 4,000 ppm boron) from the RWSP is returned to the reactor vessel through the SI pump flow, which is controlled by the associated direct vessel safety injection line isolation valve.

6.3.3 Performance Evaluation

Chapter 15 presents a complete discussion and analysis of plant anticipated operational occurrences (AOOs), transients and postulated accidents (PAs), while Chapter 19 presents a probabilistic risk assessment of more severe and even less likely accidents. Chapter 15 and Subsection 6.2.1 describe accident analysis results that include the effects of ECCS operation. The specific events described in Chapter 15 where the ECCS may be actuated are described in this subsection. Subsection 6.2.1 describes analyses that calculate maximum containment pressure and temperature from postulated accidents that release high-energy fluids into the containment.

The information in Chapter 15 and in Subsection 6.2.1 indicates that the acceptance criteria are met for all events that rely on ECCS mitigation. Meeting these acceptance criteria demonstrates that the performance of the ECCS is adequate and therefore the ECCS design is acceptable.

Events during which the actuation of the ECCS may be necessary are categorized and identified in Items below:

A.Increase in Heat Removal by the Secondary System

Category A Events are non-LOCA events in which the primary protection is provided by regular monitoring of critical parameters, such as the SG level and the main steam flow from the MCR. These postulated transients could cause an automatic trip of the reactor

through the Reactor Protection System. ECCS actuation would be caused by a low pressurizer pressure or a low main steam line pressure, and in the case of A.ii below, also by a high containment pressure.

i.Inadvertent opening of steam generator relief or safety valve

This event is an AOO. Chapter 15, Subsection 15.1.4 provides a detailed description of the event and its results. Inadvertent opening of a steam generator relief, steam generator safety, or turbine bypass valve can cause a rapid increase in steam flow and a depressurization of the secondary system. The energy removed from the reactor coolant system by this event is sufficient to cause the RCS pressure to initiate the ECCS on low pressurizer pressure. However, the RCS pressure does not decrease below the accumulator charge pressure; therefore, the accumulators are not credited in the analysis. Only two pumps operate to inject borated water from the RWSP into the reactor vessel downcomer. This scenario is consistent with the most severe single active failure. If such a failure occurs, the remaining trains provide the functions credited in this analysis.

In addition to the reactor trip, the following engineered safeguards feature functions are assumed to be available to mitigate the accident:

- Steam line isolation
- EFWS isolation
- Safety injection
- Reactor coolant pump trip
- Main feedwater isolation

The time required for borated water to reach the core is determined by taking into consideration: (1) the period from the time the ECCS actuation signal is generated to the time the safety injection pumps reach full speed, and (2) the transport time for the injected water to pass through the reactor coolant piping. These delays and purge volumes are directly modeled in the MARVEL-M code. The time sequence of the event is provided in Table 15.1.4-1.

The analysis shows that the departure from nucleate boiling ratio (DNBR) remains well above the 95/95 limit. Thus, the fuel cladding temperature would not increase significantly during this transient. For this event, the reactor coolant system pressure does not challenge the reactor coolant system design pressure. Similarly, the main steam system pressure does not challenge the design pressure for the main steam system.

The radiological doses for this event are described in Subsection 15.1.4.5 and are bounded by the Section 15.1.5 event.

The radiological doses described in Subsection 15.1.5.5 do not exceed the guideline value of 10 CFR 50.34 and 10% of guideline value of 10 CFR 50.34, respectively.

ii.Steam system piping breaks inside and outside of containment

This event is a postulated accident (PA). Chapter 15, Subsection 15.1.5 provides a detailed description of the event and its results. This event encompasses a spectrum of steam system piping failure sizes and locations from both power operation and hot zero power initial conditions. If the break occurs inside the containment volume, containment pressure signals are available to actuate ECCS and containment heat removal systems. These signals and the containment systems are not used in the core response analysis presented in this section.

Reactor coolant system pressure decreases below the shutoff head of the Safety Injection System, resulting in the addition of borated water to the reactor coolant system. The RCS pressure does not decrease below the accumulator charge pressure; therefore, the accumulators are not credited in the analysis.

The limiting single failure for the event initiated from hot shutdown conditions is the failure of one ECCS train. Two of the remaining trains are assumed to operate to provide the safety injection functions credited in this analysis.

When the steam pressure in the faulted steam generator falls below the Low Main Steam Line Pressure setpoint (in any loop), the ECCS is actuated and the main steam isolation valves are closed. The ECCS signal also actuates EFWS and feedwater isolation to isolate the steam generators from each other.

In addition to the reactor trips listed above, the following engineered safeguards feature functions are assumed to be available to mitigate the accident:

- Steamline isolation
- EFWS isolation
- Safety injection
- Reactor coolant pump trip
- Main feedwater isolation

Only two safety injection trains are assumed to operate to inject borated water into the reactor vessel. The time required for borated water to reach the core is determined by taking into consideration: (1) the period from the time the ECCS actuation signal is generated to the time the safety injection pumps reach full speed and (2) the transport time for the injected water to pass through the reactor coolant piping. The time for the safety injection pumps to reach full speed includes time for the emergency gas turbine generators to start for the case where offsite power is not available. ECCS signal delays, backup power start delays, and safety injection piping and purge volumes are modeled by the MARVEL-M code. The time sequence of the event is provided in Table 15.1.5-1.

The analysis shows that the minimum DNBR remains above the 95/95 limit. Thus, the fuel cladding temperature would not increase significantly during this transient.

The radiological doses for this event are described in Subsection 15.1.5.5.

The radiological doses are less than the guideline value of 10 CFR 50.34 and 10% of guideline value of 10 CFR 50.34, respectively.

B.Decrease in Reactor Coolant Inventory

Category B events are LOCAs. ECCS actuation would generally be initiated by low pressurizer pressure or high containment pressure. However, it is possible that a small break LOCA with an extremely small break flow area would not result in automatic ECCS actuation.

i.LOCA resulting from a spectrum of postulated piping breaks within the RCPB

Chapter 15, Subsection 15.6.5 provides a detailed description of the large and small break analysis and results.

LOCAs are accidents that would result from the loss of reactor coolant, at a rate in excess of the capability of the reactor coolant makeup system, from breaks in pipes in the reactor coolant pressure boundary up to and including a break equivalent in size to the double-ended rupture of the largest pipe in the reactor coolant system.

For this accident, the ECCS is actuated by the ECCS actuation signal due to high containment pressure. The accumulators discharge, followed by actuation of the safety injection pumps, and deliver borated water to the core. Following completion of core reflood (large break) or core recovery (small break), the ECCS continues to supply borated water to the RCS for long-term cooling. In the small break LOCA, the RCS pressure does not fall below the injection pressure for the accumulators, depending on the break size. In this case, the SIS system solely provides the core reflooding function.

In the event of a small break, a slow depressurization of the RCS would occur. The low RCS (pressurizer) pressure signal causes a reactor trip. A loss of offsite power following the reactor trip is assumed in the analysis. Turbine and the RCP would trip accordingly. The ECCS actuation signal causes the high head injection system to inject borated water to the core. With the ECCS injection, only the upper part of the core is uncovered. But then the core is recovered in a short period for the small break LOCA.

In the event of a large-break LOCA, a rapid depressurization of the RCS occurs. The accumulators and the SI pumps inject borated water. The accumulators supply a large injection flow rate initially to refill the reactor vessel downcomer. The accumulator injection flow rate is then automatically switched to the small injection flow rate mode, once the accumulator water level decreases below a specified value. The SI pumps directly inject borated water from the RWSP to the reactor vessel downcomer through the DVI nozzles. The injection flow rate of the SI pumps increases as the RCS pressure falls, approaching containment atmosphere.

The calculated results for the event are presented in Table 15.6.5-8 (Large Break) and Table 15.6.5-10, 12, 14 (Small Break). The time sequence of the event is provided in Table 15.6.5-6 (Large Break) and Table 15.6.5-9, 11, 13 (Small Break).

The results of the LOCA analyses demonstrate that the acceptance criteria of 10 CFR 50.46 are satisfied. The peak containment pressure has been shown to be below the containment design pressure. The exclusion area boundary and low population doses have been shown to meet the 10 CFR 50.34 dose guideline. The dose for the main control room personnel has been shown to meet the dose criteria given in GDC 19.

ii.Radiological consequences of a steam generator tube failure

This event is a PA. Chapter 15, Subsection 15.6.3 provides a detailed description of the steam generator tube failure analysis and results. In the steam generator tube failure event, the complete severance of a single steam generator tube is assumed. The event is assumed to take place at full power with the reactor coolant contaminated with fission products, corresponding to continuous operation with a limited number of defective fuel rods. The event leads to leakage of radioactive coolant from the RCS to the secondary system.

If the pressurizer pressure decreases below the pressurizer pressure low setpoint, ECCS is actuated. The ECCS signal starts the safety injection pumps and also trips the reactor coolant pumps, which coast down to natural circulation conditions. In addition, an ECCS actuation signal provides feedwater isolation by automatically tripping the main feedwater pumps and fully closing all control valves and feedwater isolation valves in the feedwater system. The core makeup from the borated safety injection flow (from the refueling water storage pit) provides the heat sink to remove decay heat from the reactor.

The makeup water from the safety injection flow increases the RCS water inventory, and stabilizes the RCS pressure and pressurizer water level. After the safety injection is terminated, the break flow eventually stops when the RCS pressure equalizes with the ruptured steam generator pressure. At this point, the plant is stabilized. RHR is initiated to provide long term cooling after RCS temperature is sufficiently reduced via heat removal by the intact SGs.

The following engineered safeguards features are assumed to be available to mitigate the accident:

- EFWS
- EFWS isolation
- Safety Injection

ECCS must be terminated to stop primary-to-secondary leakage. The ECCS is terminated manually according to the SI termination criteria specified in the Emergency Operating Instructions. After the ECCS is terminated, leakage flow will continue until the RCS and steam generator pressures equalize. SI is assumed to be provided by all four SI pumps at the maximum flow rate. The time sequence of the event is provided in Table 15.6.3-1.

The radiological doses for this event are described in Subsection 15.6.3.5.

The radiological doses are less than the guideline value of 10 CFR 50.34 and 10% of guideline value of 10 CFR 50.34, respectively.

iii.Spectrum of rod ejection accidents

This event is a PA. A rod ejection accident also causes a small break LOCA. Chapter 15, Subsection 15.4.8 provides a detailed description of the rod ejection analysis and results.

This accident is defined as the mechanical failure of a control rod drive mechanism pressure housing, which results in the ejection of a rod cluster control assembly (RCCA) and its drive shaft. The consequence of this RCCA ejection is a rapid positive reactivity insertion with an increase of core power peaking, possibly leading to localized fuel rod failure. The event is analyzed under a spectrum of power levels. The time sequence of the event is provided in Table 15.4.8-1.

The reactor coolant system pressure remains well below 110% of the system design pressure, so the integrity of the reactor coolant pressure boundary is maintained. By meeting this criterion, the peak reactor coolant pressure also remains less than the "Service Limit C" stipulated by the ASME code. The radiological doses for this event are described in subsection 15.4.8.5. Radiological consequence is less than 25% of the dose guideline of 25 rem TEDE stipulated by 10 CFR 50.34.

6.3.3.1 Operational Restrictions

Chapter 16, "Technical Specifications," provides system and component operating restrictions in the form of limiting conditions for operation (LCOs). Each LCO specifies the minimum capacities, concentrations, components, or trains and relies on redundancy to account for the component and subsystem unavailability (e.g., maintenance). The required test frequency and acceptance criteria to demonstrate operability are provided.

6.3.3.2 ECCS Performance Criteria

Chapter 16, "Technical Specifications," specifies the ECCS performance criteria. Technical Specification Acceptance Criteria ensure that the relevant system data (e.g., tank levels, boron concentration, flow rate, pressure) are collected, reviewed, and approved. The Technical Specification Bases section provides supporting information and rationale for each specification. Chapter 15 presents relevant ECCS performance criteria.

6.3.3.3 Single Failure Considerations

The ECCS is designed with redundancy so that the specified safety functions are performed assuming a single failure of an active component for a short-term following an accident, and assuming either a single failure of an active component or a single failure of a passive component for a long-term following an accident. The ECCS consists of four trains. The accumulator capacity is sized such that one of four accumulators is expected to flow out of the break, with no contribution to the core re-flood. Two of four SI pump trains are required to mitigate the consequences of a large-break LOCA. One train is expected to be out of service for maintenance and one train is expected to fail upon initiation of the safety injection signal. The ECCS performance, with assumed

single failures, is evaluated based on the failure modes and effects analysis presented in Table 6.3-6.

6.3.3.4 ECCS Flow Performance

A process flow diagram for the ECCS is presented in Figures 6.3-13 and 6.3-14. Safety injection pump flow performance requirements are provided in Figure 6.3-4. High head safety injection flow characteristics for minimum and maximum safeguards are provided for the system in Figures 6.3-15 and 6.3-16. These curves are used for the basis to evaluate the safety injection flowrate during small-break and large-break LOCAs, which are shown in Figures 15.6.5-17, 26 and 35 for the small-break LOCA and in Figure 15.6.5-7 for the large-break LOCA reference case.

The time sequences for ECCS operation, including its subsystems are presented in Chapter 15 and Subsection 6.2.1. The pH of the RWSP increases when the NaTB baskets are wetted by the containment spray following a LOCA. Subsection 6.5.2 contains a description of pH adjustment in the RWSP. Subsection 6.2.1 also shows the initiation of the CSS. Boron precipitation in the reactor vessel is prevented by manually realigning the SIS to shift the RCS injection from the DVI line to the hot leg injection line at approximately 4 hours after a LOCA event.

6.3.3.5 Use of Dual-Function Components for ECCS

As discussed in Subsection 6.3.2.2.4 above, the ECC/CS strainers are shared with the CSS. The suction pipes inside the sump pit distribute water from the RWSP to each of the following:

- SIS
- CSS
- RHRS

The SI minimum flow and full-flow test line returns to the RWSP. The minimum flow and full-flow test line is shared with the test line piping and the CS/RHR full-flow test line piping prior to discharging into the RWSP.

The hot leg injection line is shared with the suction line to the CS/RHR pumps and emergency letdown lines.

The cold leg injection line from the accumulators is shared with the return line from the RHRS.

6.3.3.6 Limits on Emergency Core Cooling Systems Parameters

Chapter 16, “Technical Specifications,” provides operating restrictions in the form of LCO. Each LCO accounts for a component or subsystem unavailability (e.g., maintenance or testing), and includes the term “operable” to account for related items such as electrical power sources, ventilation, valve lineups, and instrumentation. Acceptance criteria verify that the system data (e.g., tank levels, boron concentration, flow rate, pressure) is

collected, reviewed, and approved. The Bases section of the Technical Specifications provide supporting information and rationale for the LCOs.

6.3.4 Tests and Inspections

ECCS testing demonstrates that the system performs satisfactorily in all expected operating configurations. Testing includes logic, setpoints, and flow rate. Concurrent testing of the ECCS is performed to ensure that the minimum number of operable components are available.

The SI pumps are tested with the pump minimum flow or full flow piping loops during normal reactor power operation.

Leak testing of each RCPB check valve in the SI lines is performed using the system leak test lines.

6.3.4.1 ECCS Performance Tests

Chapter 14, Section 14.2, “Initial Plant Test Program,” is organized and conducted to develop confidence that the plant operates as designed. The initial test program verifies the design and operating features, and gathers important baseline data on the nuclear steam supply system, as well as the balance-of-plant. The baseline data is used to establish the acceptability basis for surveillance and testing during the operational life of the plant. The three phases of the initial test program are as follows:

- Pre-operational tests
- Initial fuel loading and criticality
- low power and power ascension testing

The pre-operational test program tests each train of the ECCS under both ambient and simulated hot operating conditions. Testing of the SI pumps using the full flow test line demonstrates the capability of the pump to deliver the design flow.

Pre-operational tests first provide assurance that individual components are properly installed and connected, and then demonstrate that system design specifications are satisfied. Pre-operational testing demonstrates that limited interface requirements for support systems are satisfied. Formal review and approval of pre-operational test results (the “pre-operational plateau”) are performed prior to the initial fuel loading and criticality. The pre-operational test program for the ECCS is described in following Subsections, Chapter 14:

- 14.2.12.1.54 Safety Injection System (SIS) Preoperational Test
- 14.2.12.1.55 ECCS Actuation and Containment Isolation Logic Preoperational Test
- 14.2.12.1.56 Safety Injection Check Valve Preoperational Test

- 14.2.12.1.57 Safety Injection Accumulator Test

Fuel loading and initial criticality testing verify the operation of nuclear instruments and fuel handling equipment, verifies the basic core physics, and produces important baseline (clean, cold) core data.

Low power and power ascension testing verifies integrated core physics plant operation that is limited to specified power plateaus. The results of all tests associated with each power plateau are reviewed and approved prior to moving to the next, higher power plateau. A full test of ESFs is performed from cold conditions and a reduced flow test is performed from hot conditions prior to fuel load, in accordance with the guidance provided by RG 1.79 (Ref. 6.3-5). The testing under maximum startup loading conditions is performed to verify the adequacy of the electric power supply. Maximum startup loading conditions testing is described in Chapter 14, Subsection 14.2.12.1.

LCOs, surveillances, and surveillance bases for the ECCS pumps and valves are provided in Chapter 16, Technical Specification and Bases Section 3.5.

The initial test program for the ECCS is described in Section 14.2 and includes requirements for construction, preoperational, and startup testing.

6.3.4.2 Reliability Tests and Inspections

Because the ECCS is a standby system and not normally operating, periodic inservice pump, valve, and logic tests are performed. Chapter 16, “Technical Specifications,” requires that an IST pump and valve program be developed and implemented in accordance with the requirements of 10 CFR 50.55a(f) (Ref. 6.3-6).

All ECCS valves are tested to demonstrate satisfactory performance in all expected operating modes, including injection at the required flow rate and pressure. Testing of the ECCS is performed during the initial startup testing in accordance with the guidance in RG 1.68 (Ref. 6.3-7), Appendix A.

The SI pumps are able to be periodically tested with the pump minimum or full flow piping loops during normal operation.

Leak testing of each RCPB check valve in the SI lines is performed using the system leak test lines.

Initiation logic and the interlock logic system functional testing to ensure proper system initiation are described in detail in Chapter 7, Section 7.1.

Testing intervals of ECCS components are found in Chapter 3, Subsection 3.9.6.

Preservice and inservice examinations, tests, and inspections, including layout and constructing the ECCS with free access to component, are performed in accordance with ASME Code Section XI as required in Section 6.6.

6.3.5 Instrumentation Requirements

The ECCS instrumentation and control requirements, including design details, setpoint determinations, automatic initiation, actuation logic, and interlocks, are discussed in Section 7.3, “Engineered Safety Feature Systems.” MCR instrumentation and alarms for the purposes of monitoring and manual control are also discussed.

6.3.5.1 Safety Injection Signal

The actuation signal that starts the SI pumps and repositions the SIS accumulator valves if closed, is referred to as the safety injection signal. The signals that are generated by the instrumentation and control (I&C) protection logic described in Chapter 7 and used to initiate the safety injection signal are the following:

- Low pressurizer pressure
- Low main steam line pressure
- High containment pressure
- Manual ECCS actuation from the MCR

The S signal due to the low pressurizer pressure signal or low main steam line pressure signal can be bypassed by operator action when the RCS pressure decreases below the P-11 setpoint. The bypass is available during plant cooldown and cold shutdown and is automatically reset when the RCS pressure increases above the P-11 setpoint.

The S signal also provides an automatic load sequencing of the emergency power sources to accommodate the LOOP event. Each ESF system train monitors the loss of power condition for its respective train. The safety injection signal is blocked until the reset of the reactor trip signal. Details of the ESF system are provided in Chapter 7, Section 7.3.

6.3.5.2 Accumulators

Two pressure channels are installed on each of the four accumulators. Each channel provides main control room pressure indication, and high- and low-pressure alarms. The pressure indication is used for setting the initial nitrogen charge pressure and for monitoring during normal operations.

Two level channels are installed on each of the four accumulators. Each channel provides MCR and RSC level indication, and high- and low-level alarms. The alarms indicate an abnormal operating water level in the accumulator that is outside or approaching the bounds of the plant Technical Specifications.

One pressure controller with a local pressure indicator is installed in the accumulator nitrogen supply line to regulate the accumulator nitrogen supply pressure control valve.

6.3.5.3 Safety Injection Pumps

Suction and discharge pressure for each SI pump is displayed in the MCR and RSC. The operators use pump suction and discharge pressure indication to verify that a suitable flow path is available and for periodic inservice testing.

One differential pressure transmitter is installed in each of the four SI pump discharge lines, with a flow rate indication in the MCR and RSC. It is also used for tests required to assess the performance of the SI pumps.

One differential pressure transmitter is installed in each of the four SI pump minimum flow lines, with a flow rate indication in the MCR and RSC.

The differential flow rate between the SI pump discharge flow rate and the SI pump minimum flow rate is indicated in the MCR and RSC as SI flow rate into the RCS for the purpose of monitoring the SI flow during loss-of-coolant events. The operators can confirm the SI flow.

The following alarms which indicate unacceptable parameters of the SI pump and motor are provided in the MCR and RSC:

- Pump bearing temperature- High
- Pump bearing oil pressure- Low
- Motor stator temperature- High
- Motor cooling air temperature- High

6.3.5.4 Refueling Water Storage Pit

Two wide range and two narrow range level channels are installed on the RWSP. Each channel provides level indication in the MCR and RSC, while two wide range level channels also provide high, below normal, and low level alarms.

One temperature channel is installed on the RWSP. This channel provides temperature indication and low temperature alarm in the MCR and RSC.

6.3.6 Combined License Information

Any utility that references the US-APWR design for construction and Licensed operation is responsible for the following COL items:

COL 6.3(1) Deleted

COL 6.3(2) Deleted

COL 6.3(3) Deleted

COL 6.3(4) Deleted

COL 6.3(5) Deleted

COL 6.3(6) Deleted

6.3.7 References

6.3-1 U.S Nuclear Regulatory Commission Safety Evaluation Report for the RESAR SP/90, NUREG-1413, April 1991.

6.3-2 Acceptance criteria for ECCSs for light-water nuclear power reactors, Title 10, Code of Federal Regulations, 10 CFR 50.46, January 2007.

6.3-3 The Advanced Accumulator, MUAP-07001-P Rev. 3 (Proprietary) and MUAP-07001-NP Rev. 3 (Non-Proprietary), March 2011.

6.3-4 Large Break LOCA Code Applicability Report for US-APWR, MUAP-7011-P Rev. 1 (Proprietary) and MUAP-7011-NP Rev. 1 (Non-Proprietary), March 2011.

6.3-5 Nuclear Regulator Commission, Preoperational Testing of Emergency Core Cooling Systems for Pressurized Water Reactors, Regulatory Guide 1.79, September 1975.

6.3-6 Inservice Testing Requirements, Title 10, Code of Federal Regulations, 10 CFR 50.55a(f), January 2007.

6.3-7 Nuclear Regulator Commission, Initial Test Programs for Water-Cooled Nuclear Power Plants, Regulatory Guide 1.68, March 2007.

Table 6.3-1 Response of US-APWR to TMI Action Plan (Sheet 1 of 2)

No.	Regulatory Position	US-APWR Design
II.K.3.15	Modify break detection logic to prevent spurious isolation of high pressure core injection and reactor core isolation cooling systems (Applicable to BWR's only)	N/A
II.K.3.18	Perform a feasibility and risk assessment study to determine the optimum automatic depressurization system (ADS) design modifications that would eliminate the need for manual activation to ensure adequate core cooling. (Applicable to BWR's only)	N/A
II.K.3.21	Perform a study of the effect on all core-cooling modes under accident conditions of designing the core spray and low pressure coolant injection systems to ensure that the systems will automatically restart on loss of water level, after having been manually stopped, if an initiation signal is still present. (Applicable to BWR's only).	N/A
II.K.3.28	Perform a study to ensure that the Automatic Depressurization System, valves, accumulators, and associated equipment and instrumentation will be capable of performing their intended functions during and following an accident situation, taking no credit for non-safety related equipment or instrumentation, and accounting for normal expected air (or nitrogen) leakage through valves. (Applicable to BWR's only).	N/A
II.K.3.45	Provide an evaluation of depressurization methods, other than by full actuation of the automatic depressurization system, that would reduce the possibility of exceeding vessel integrity limits during rapid cooldown for BWRs.	N/A
III.D.1.1	**LEAKAGE CONTROL OUTSIDE CONTAINMENT** Leakage detection and leakage control program outside of containment following an accident shall be discussed.	A pit (sump) with a leak detector installed in each pump compartment and alarms to MCR to prevent significant leakage of radioactive recirculation water from the high head injection system to the reactor building. The high head injection system is designed to have sufficient redundancy and independence to prevent loss of core cooling function during an accident assuming the isolation of the leaked train after leakage is detected.
II.K.3.16	Perform a study to identify practicable system modifications that would reduce challenges and failures of relief valves, without compromising the performance of the valves or other systems. (Applicable to BWR's only).	N/A

Table 6.3-1 Response of US-APWR to TMI Action Plan (Sheet 2 of 2)

No.	Regulatory Position	US-APWR Design
II.K.3.24	Perform a study to determine the need for additional space cooling to ensure reliable long-term operation of the reactor core isolation cooling (RCIC) and high-pressure coolant injection (HPCI) systems, following a complete loss of offsite power to the plant for at least two (2) hours. (Applicable to BWR's only).	N/A
II.D.3	Provide direct indication of reactor coolant system relief and safety valve position (open or closed) in the control room.	The direct indication of reactor coolant system relief and safety valve position (open or closed) is provided in the MCR.
II.F.2	Provide instruments that provide in the control room an unambiguous indication of inadequate core cooling, such as primary coolant saturation meters in PWR's, and a suitable combination of signals from indicators of coolant level in the reactor vessel and in-core thermocouples in PWR's and BWR's.	Following instrumentations are provided for indication of inadequate core cooling (ICC). • Degrees of subcooling • Reactor vessel water level (RVWL) • Core exit temperature The degrees of subcooling indicates the loss of subcooling, occurrence of saturation and achievement of a subcooled condition following core recovery. The RVWL provides information to the operator on the decreasing liquid inventory in the reactor. The core exit temperature sensors monitor the increasing core exit temperatures associated with ICC and the decreasing core exit temperatures associated with recovery from ICC. These instrumentations are also provided as PAM variables with an unambiguous, easy-to-interpret indication. Refer to DCD Subsection 7.5.1.1.3 for more detail.

Table 6.3-2 Response of US-APWR to Unresolved Safety Issues (Sheet 1 of 2)

No.	Regulatory Position	US-APWR Design
A-1	**WATER HAMMER** A number of water hammers have been experienced in several systems (e.g., SG feed water ring/piping, ECCS, RHRS, Containment Spray System, Sea Water System, Main Feed Water System, Main Steam System) but most of them were relatively small damage of piping support. Although they did not result in radioactive release to outside of plant, establishing a systematic review procedure is necessary addressing continuous occurrence of the event and potential to plant safety.	The safety injection piping is normally filled with water by filling and venting prior to operation, and drain-down to RWSP is prevented by four check valves provided in series between the safety injection pump and the direct vessel injection (DVI) nozzle on the reactor vessel. In addition, water column separation could not be formed by the difference of elevations between the RWSP water level during normal operation and the highest point in the safety injection piping. Therefore, the void causing water hammer could not be formed in the safety injection piping. In addition, ECCS has the pump full-flow testing line branched off the safety injection line at the highest point in the containment and is led to RWSP. If the void would be formed in the system due to insufficient venting, the void in piping could be dynamically vented to RWSP through the periodic safety injection pump testing using this full- flow line, and the system is maintained in the water solid condition.
A-2	**ASYMMETIC BLOWDOWN LOADS ON REACTOR PRIMARY COOLANT SYSTEMS** In 1975, NRC received a report from Westinghouse describing that asymmetric blowdown loads due to hypothetical breaks in specified points are not considered in the design of reactor vessel support structures. According to the analyses, these asymmetric blowdown loads were significant to reactor vessel support structures and affected their integrity.	Because the protection design in the US-APWR uses the LBB concept, the assumption of asymmetric blowdown loads based on the hypothetical break is not necessary.
A-24	**QUALIFICATION OF CLASS 1E SAFETY-RELATED EQUIPMENT** Environmental qualifications of safety-related equipments are based on the IEEE-323, but interpretation of this standard varies and some of the interpretations are not acceptable to the NRC requirements.	Environmental qualification is applicable to the Class 1E safety-related equipment of US-APWR according to 10 CFR 50.49.

Table 6.3-2 Response of US-APWR to Unresolved Safety Issues (Sheet 2 of 2)

A-40	**SEISMIC DESIGN CRITERIA** Seismic design requirements and methodology have evolved. But early plants were designed without specific seismic requirements. These plants need to be reviewed based on the latest knowledge.	US-APWR is designed based on the latest seismic design criteria. (Refer to DCD Chapter 3, Section 3.7).
A-43	**CONTAINMENT EMERGENCY SUMP PERFORMANCE** After a LOCA, ECCS degradation is a concern due to air or material intrusion in the recirculation sump screen. The following specific items are: 1. Pump failure due to vortex, or air intrusion. 2. Screen clogging due to foreign materials such as collapsed insulation attributable to a LOCA and loss of pump NPSH from a clogged screen. 3. Operability problems with RHR/CSS pump due to air and foreign materials, and, effect of foreign particles to seals and bearings.	This issue is discussed in Subsection 6.2.2.2.6 and 6.2.2.3.
B-61	**ALLOWABLE ECCS EQUIPMENT OUTAGE PERIODS** The current outage/maintenance periods for ECCS equipment are determined using engineering judgment. Unavailability of ECCS equipment is between 0.3 and 0.8 need to be optimized. In the United States, On-Line Maintenance is frequently performed and discussed using the PSA method in light of safety.	In the US-APWR, ECCS consists of four independent trains of mechanical components and electrical equipments. The US-APWR allows On-Line Maintenance without conflicting the limiting condition for operation (LCO).

MIC-03-06-00054

Table 6.3-3 Response of US-APWR to Generic Safety Issues (Sheet 1 of 2)

No.	Regulatory Position	US-APWR Design
23	**REACTOR COOLANT PUMP SEAL FAILURE** The results reported in WASH-1400 indicated that breaks in the reactor coolant pressure boundary in the range of 0.5 to 2 inches may contribute to core-melt. In this range of break size, the RCP seal is assumed to have the highest failure rate. Therefore, it is important to ensure the RCP seal integrity. However, the RCP seal integrity relates to item A-44, Station Blackout (SBO), or item GI-65, CCW Failure, and needs to be addressed. An easy measure for assuring the RCP seal integrity is to change the seals every year, but results in increased radiation exposure.	RCP seals are designed such that the pressure tightness (or leak tightness) is usually maintained by No.1 seal, and in case of a failure of No.1 seal, No.2 seal can withstand full pressure as the defense-in-depth function. The RCP seal integrity is discussed in Chapter 8, Subsection 8.4.2.1.2 and Chapter 9, Subsection 9.2.2.
24	**AUTOMATIC ECCS SWITCHOVER TO RECIRCULATION** There are 3 methods to switchover from injection mode to recirculation mode (i.e., manual, semi-automatic, and automatic), but these methods may be affected by human-error, component failure, and common-cause failure, respectively.	In the US-APWR, the RWSP is placed in the containment and the switchover of ECCS water source following an accident is not necessary.
105	**INTERFACING SYSTEM LOCA AT LWRS** The low pressure systems are connected to RCPB using check valves. The leak of check valves could result in the failure of low pressure system. In BWR plants, leak testing for pressure isolation valve in the low pressure system which connects to the RCS is specified to be performed every 18 months in the Tech. Spec. However, 30 failures of RCPB function have occurred in 200 BWR years of operating experience. Among 30 failures, 20 cases are inadvertent remained-open check valves after maintenance by human-error, and 10 cases are stuck-open check valves.	In the US-APWR, the discharge of boric acid water from the accumulators, below the standpipe, replaces the low head safety injection function in typical US PWR plants. As such, there are no “low head” systems outside the containment associated with ECCS. The Residual Heat Removal (RHR) System is a low pressure system that is connected to the RCS and located outside the containment. The RHR system is designed to prevent an interfacing system LOCA by having a design pressure of 900 psig. The RHR 900 psig design pressure system can withstand the full RCS pressure. Two motor operated valves in series on the RHR suction line with power lockout capability during normal power operation minimize the probability of RCS pressure entering the RHR system. Even if both these valves are opened during normal power operation, the RHR system is designed to discharge the RCS inventory to the in-containment RWSP.

Table 6.3-3 Response of US-APWR to Generic Safety Issues (Sheet 2 of 2)

No.	Regulatory Position	US-APWR Design
122.2	**INITIATING FEED AND BLEED** This issue addresses the emergency operating procedure and operator training to assess the necessity of initiation of cooling operation using feed-and-bleed based on the experienced loss-of-steam generator cooling incident at Davis Besse described in NUREG-1154.	This issue is discussed in Subsection 6.3.2.8.
185	**CONTROL OF RECRITICALITY FOLLOWING SMALL BREAK LOCA IN PWRS** In PWR plants, if RCPs and natural circulation stopped during small break LOCA, steam generated at the core could be condensed in the SG and be accumulated in the outlet plenum and crossover piping. When the natural circulation or RCP is restarted, the low concentration boric acid coolant could flow into the core and result in recriticality.	This issue was considered not to be a generic safety issue by the NRC, and closed.
191	**ASSESSMENT OF DEBRIS ACCUMULATION ON PWR SUMP PERFORMANCE(Rev.1)** Another phenomenon and failure mode that are not considered in USI, A-43, were revealed in a study concerning ECCS sump strainer blockage in BWR plants. In addition, debris such as degradation or failure of paint in the containment and associated sump blockage in PWR plants was revealed by plant operating experience. NRC recognized this matter and required the extended study to address these latest safety issues.	This issue is discussed in Subsection 6.2.2.2.6 and 6.2.2.3.

MIC-03-06-00055

Table 6.3-4 Response of US-APWR to Generic Letters and Bulletins (Sheet 1 of 11)

No.	Regulatory Position	US-APWR Design
GL 80-014	**LWR PRIMARY COOLANT SYSTEM PRESSURE ISOLATION VALVES** The failure of two in-series isolation valves (two check valves , or two check valves + MOV) isolating the high pressure RCS from the low pressure systems such as RHRS could result in core melt accident (EVENT V). Acceptable methods to ensure the integrity of these valves include continuous pressure monitoring on the low pressure side of each check valve or periodic IST leakage testing on each valve every time the plant is shutdown and each time a check valve is moved from the fully closed position. At this time, NRC does not have information about measures taken by each plant. These periodic valve tests or continuous surveillance should be accomplished as soon as possible. If tests or surveillance provisions necessitate a plant outage, every effort should be made to accomplish such tests/provisions prior to plant startup after the next scheduled outage.	In the US-APWR, the accumulator with flow damper has the low head injection function, thereby the low head injection system is installed as ECCS.
GL 80-035	**EFFECT OF A DC POWER SUPPLY FAILURE ON ECCS PERFORMANCE** NRC required BWR licensees to report on the effects and acceptability dc power supply failures have on the ECCS in BWR plants.	Motor operated valves (MOVs) are provided redundant power sources to prevent the loss of function. (Refer to Table 6.3-6, Failure Mode and Effect Analyses.)
GL 81-021	**NATURAL CIRCULATION COOLDOWN** On June 11, 1980, the St. Lucie Plant, Unit No. 1, was forced to cool down on natural circulation as a result of a CCW malfunction. NRC has identified problems such as the difficulty of controlling RCS inventory due to vessel voiding and failure of the operator to have prior knowledge for this event. Based on the analyses of this event, the NRC requested all PWR utilities to review promptly their plant operation in light of the St. Lucie, Unit No. 1 event, and, as necessary, to adopt procedures and training which will enable operators to avoid (if possible), recognize and properly react to this event. The NRC also requested that an assessment of their facility procedures and training program with respect to the matters described above within 6 months.	Safety-related RV Head Vent System is designed with redundancy to remove void (if generated) from RV head. In addition, a natural circulation test is performed during startup and the capability of natural circulation operation confirmed. (Refer to DCD Chapter 14)

Table 6.3-4 Response of US-APWR to Generic Letters and Bulletins (Sheet 2 of 11)

No.	Regulatory Position	US-APWR Design
GL 85-16	**HIGH BORON CONCENTRATIONS** On December 28, 1984, the SIS was inoperable in Indian Point 2 because all SI pumps were frozen with crystallized boric acid. The analytical methods for calculating the consequences of a SLB have improved and these revised calculations demonstrate that the negative reactivity that needs to be added is lower than originally thought and consequently the need for highly concentrated boron injection is reduced or eliminated. In response to this, many licensees including Surry 1&2 have requested that they be allowed to either physically remove the boron injection tank from the safety injection piping, or at least reduce boron concentrations in the tank to the levels safely used in other sections of the safety injection piping and refueling water storage tank . Licensees have submitted new analyses of the steam line break event that demonstrated the regulatory criteria (i.e., 10 CFR 100 guidelines dose values) were met. The staff has reviewed these analyses and granted these requests. In light of the safety risks inherent in the system and these new calculations which show a reduced need for boron injection, the NRC staff encouraged the other licensees to reevaluate the need for maintaining high concentrations of boron in their BITs and possibility to remove the boron injection tanks or reduce the boron concentration.	Boron injection tank is not installed in the US-APWR; Only the borated water stored in the Refueling Water Storage Pit (approximately 4,000 ppm B) is injected for boration in an accident. Performance evaluation in the steam line break event is provided in DCD Chapter 15, Subsection 15.1.5.

Table 6.3-4 Response of US-APWR to Generic Letters and Bulletins (Sheet 3 of 11)

No.	Regulatory Position	US-APWR Design
GL 86-07	**TRANSMITTAL OF NUREG-1190 REGARDING THE SAN ONOFRE UNIT 1 LOSS OF POWER AND WATER HAMMER EVENT** On November 21, 1985, San Onofre Unit 1 Nuclear Power Plant experienced a loss of ac electrical power and failure of multiple check valves followed by a severe water hammer in the secondary system which caused a steam leak and damaged plant equipment (e.g., main feedwater pump trip, main feedwater pump suction pipe break). The NRC investigated and documented the factual information and their findings and conclusions associated with the event in NUREG-1190, "Loss of Power and Water Hammer Event at San Onofre Unit 1, on, November 21, 1985." The NRC requested all reactor licensees and applicants to review the information in NUREG-1190. The NRC requested the utility to reply relating to the validity of check valves and report the status of implementation of provision for USI A-1, “Water Hammer.”	The safety injection piping is normally filled with water by filling and venting prior to operation, and drain-down to RWSP is prevented by four check valves provided in series between the safety injection pump and the direct vessel injection (DVI) nozzle on the reactor vessel. In addition, water column separation could not be formed by the difference of elevations between the RWSP water level during normal operation and the highest point in the safety injection piping. Therefore, the void causing water hammer could not be formed in the safety injection piping. In addition, ECCS has the pump full-flow testing line branched off the safety injection line at the highest point in the containment and is led to RWSP. If the void would be formed in the system due to insufficient venting, the void in piping could be dynamically vented to RWSP through the periodic safety injection pump testing using this full- flow line, and the system is maintained in the water solid condition.

Table 6.3-4 Response of US-APWR to Generic Letters and Bulletins (Sheet 4 of 11)

No.	Regulatory Position	US-APWR Design
GL 89-10	**SAFETY-RELATED MOTOR-OPERATED VALVE TESTING AND SURVEILLANCE** NRC requires the following actions to ensure that valve motor-operator switch settings (torque, torque bypass, position limit, overload) for motor-operated valves (MOVs) in several specified systems are selected, set, and maintained so that the MOVs will operate under design-basis conditions for the life of the plant: a. Review and document the design basis for the operation of each MOV. b. Using the results from item a., establish the correct switch settings, a program to review and revise, as necessary, the methods for selecting and setting all switches. c. Individual MOV switch settings should be changed, as appropriate, to those established in response to item b. The MOV should be demonstrated to be operable by testing. d. Prepare or revise procedures to ensure that correct switch settings are determined and maintained throughout the life of plant. e. Each MOV failure and corrective action taken, including repair, alteration, analysis, test, and surveillance, should be analyzed or justified and documented.	The Testing and Surveillance of MOVs is discussed in DCD Chapter 3, Subsection 3.9.6. Environmental Qualification is discussed in DCD Chapter 3, Section 3.11.

Table 6.3-4 Response of US-APWR to Generic Letters and Bulletins (Sheet 5 of 11)

No.	Regulatory Position	US-APWR Design
GL 91-07	**GI-23, "REACTOR COOLANT PUMP SEAL FAILURES" AND ITS POSSIBLE EFFECT ON STATION BLACKOUT** The station black out (SBO) rule became effective on July 21, 1988, and the NRC received responses from all licensees addressing the SBO rule by April 21, 1989. Licensees may have analyzed their reactor coolant inventories for the SBO conditions using the specific guidance provided in NUMARC Report 87-00 of 25 gpm for RCP seal leakage for pressurized water reactors (PWRs) and 18 gpm for boiling water reactors (BWRs). These leak rates could be greater if the seals failed during the SBO event. The preliminary results of the staff's studies for GI-23 indicate that the pump seal leak rates could be substantially higher than those assumed for the resolution of the SBO issue. The staff determined that RCP seal leakage could exceed 25 gpm and lead to core uncovery during an SBO in any of the PWRs and in any of the four BWRs that do not have an ac-independent makeup capability. Having made these findings, the staff is soliciting public comments on its current understanding of GSI-23. One possible outcome may be that seal cooling be provided by an independent cooling system during off-normal plant conditions involving the loss of all seal cooling, such as could occur during an SBO. This generic letter consists of information only and does not require specific action or written response. However, utilities should recognize that such a recommendation could affect their analyses and actions addressing conformance to the SBO rule.	The RCP Seal Integrity during SBO is discussed in DCD Chapter 8, Subsection 8.4.2.1.2.

Table 6.3-4 Response of US-APWR to Generic Letters and Bulletins (Sheet 6 of 11)

No.	Regulatory Position	US-APWR Design
GL 98-04	**POTENTIAL FOR DEGRADATION OF THE EMERGENCY CORE COOLING SYSTEM AND THE CONTAINMENT SPRAY SYSTEM AFTER A LOSS-OF-COOLANT ACCIDENT BECAUSE OF CONSTRUCTION AND PROTECTIVE COATING DEFICIENCIES AND FOREIGN MATERIAL IN CONTAINMENT** NRC alerts licensees that foreign material continues to be found inside operating nuclear power plant containments. During a design basis LOCA, this foreign material could block an ECCS or safety-related CSS flow path or damage ECCS or safety-related CSS equipment. The NRC is also issuing this GL to alert the licensees to the problems associated with the material condition of Service Level 1 protective coatings inside the containment and to request information under 10 CFR 50.54(f) to evaluate the licensees' programs for ensuring that Service Level 1 protective coatings inside containment do not detach from their substrate during a design basis LOCA and interfere with the operation of the ECCS and the safety related CSS. As a result of NRC findings in these areas and due to the importance of ensuring system functionality, within 120 days of the date of this GL, licensees are required to submit a written response ensuring that Service Level 1 protective coatings inside containment do not detach from their substrate during a design basis LOCA.	This issue is discussed in Subsection ~~6.2.2.3~~6.1.2, 6.2.2.3.2, and 6.2.2.3.9.
BL 80-01	**OPERABILITY OF ADS VALVE PNEUMATIC SUPPLY** With respect to the reliability problem of ADS pneumatic supply (either nitrogen or air) system identified in Peach Bottom 2 and 3, the NRC requested each BWR utility to determine and report if hard-seat check valves have been installed to isolate accumulator systems, if periodic leak tests have been performed, and the seismic qualifications of the ADS pneumatic supply system.	N/A ADS is not installed in the US-APWR design.

MIC-03-06-00056

Table 6.3-4 Response of US-APWR to Generic Letters and Bulletins (Sheet 7 of 11)

No.	Regulatory Position	US-APWR Design
BL 80-18	**MAINTENANCE OF ADEQUATE MINIMUM FLOW THROUGH CENTRIFUGAL CHARGING PUMPS FOLLOWING SECONDARY SIDE HIGH ENERGY LINE RUPTURE** Under certain conditions which involve unavailability of the pressurizer power operated relief valves, during SI following a secondary system high energy line break and with min-flow line closed automatically, the centrifugal charging pumps could be damaged due to lack of minimum flow before presently applicable safety injection termination criteria are met. NRC required licensees of all operating PWR power reactor facilities to submit the information requested and schedule for any changes proposed within 60 days of the date of this letter.	In the US-APWR, minimum flow lines of safety injection pumps are normally open and shut-off operation of SI pumps are prevented during an accident.
BL 86-03	**POTENTIAL FAILURE OF MULTIPLE ECCS PUMPS DUE TO SINGLE FAILURE OF AIR-OPERATED VALVE IN MINIMUM FLOW RECIRCULATION LINE** At Point Beach the discharge lines for each of the SI pumps are connected to a common recirculation header to provide a test flow path and a recirculation flow path for minimum flow at times when the reactor coolant system pressure exceeds the SI pump shutoff head. The common recirculation header is provided with two air operated valves in series. Single failures of minimum flow recirculation lines containing air-operated isolation valves could result in a common-cause failure of all ECCS pumps in a system due to the deadheaded operation. Therefore, the NRC requires taking appropriate mitigating actions.	The shut-off operation of ECCS pumps due to common-cause failure is excluded from the US-APWR because the minimum flow line of each SI pump train is provided independently.
BL 88-04	**POTENTIAL SAFETY-RELATED PUMP LOSS** For the min-flow design of safety-related pumps, the NRC indicated the following concerns and requested each licensee to evaluate the validity of each plant: • If two or more pumps have a common min-flow line and one of the pumps is stronger than the other, the weaker pump may be shut-off and fail when the pumps are operating in the minimum flow mode. • If the installed min-flow capacity is not adequate, the pumps may fail during long-term min-flow operating following an accident.	In the US-APWR, the minimum flow line with sufficient capacity is installed independently for each SI pump train, and problems shown in this BL are not concerned.

Table 6.3-4 Response of US-APWR to Generic Letters and Bulletins (Sheet 8 of 11)

No.	Regulatory Position	US-APWR Design	
BL 93-02	**DEBRIS PLUGGING OF EMERGENCY CORE COOLING SUCTION STRAINERS** In Perry Nuclear Plant, a BWR-6, the debris consisted of glass fibers from temporary filters that had been inadvertently dropped into the suppression pool, and corrosion products that had been filtered from the pool by the glass fibers adhering to the surface of the ECCS strainer. This caused unexpectedly rapid loss of available NPSH. NRC requested all holders of an operating license for nuclear power reactors (both PWR and BWR) to: • Identify fibrous air filters or other temporary source of fibrous material, not designed to withstand a LOCA, which are installed or stored in primary containment. • Take prompt action to remove any such material and ensure to perform ECCS functions.	This issue is discussed in DCD Chapter 6, Subsection 6.2.2.2.6 and 6.2.2.3.	MIC-03-06-00057
BL 95-02	**UNEXPECTED CLOGGING OF A RESIDUAL HEAT REMOVAL (RHR) PUMP STRAINER WHILE OPERATING IN SUPPRESSION POOL COOLING MODE** In Limerick unit 1 which was being operated at 100% power, one safety relief valve was open. Cavitation was caused in the RHR pump which was operating to remove heat from suppression pool that received the fluid discharged from safety relief valve due to the fluctuation of motor current and flow rate. NRC requested the utility to review the operability of components such as ECCS and other pumps which draw suction from the suppression pool. In this bulletin, the NRC requested all holders of BWR operating licenses to take the following actions: • Review the operability of components such as ECCS and other pumps which draw suction from the suppression pool. The evaluation should be based on suppression pool cleanliness, suction strainer cleanliness, and the effectiveness of their foreign material exclusion practices. • The operability evaluation in the requested action above should be confirmed through appropriate test(s) and strainer inspection(s) within 120 days of the date of this bulletin. • In addition, addressees are requested to implement appropriate procedural modifications and other actions (e.g., suppression pool cleaning), as necessary, to minimize foreign material in the suppression pool, drywell and containment. Addressees are requested to verify their operability evaluation through appropriate testing and inspection.	This issue is discussed in Subsection 6.2.2.2.6 and 6.2.2.3.	MIC-03-06-00058

Table 6.3-4 Response of US-APWR to Generic Letters and Bulletins (Sheet 9 of 11)

No.	Regulatory Position	US-APWR Design	
BL 96-03	**POTENTIAL PLUGGING OF EMERGENCY CORE COOLING SUCTION STRAINERS BY DEBRIS IN BOILING-WATER REACTORS** NRC requested all BWR licensees to implement appropriate procedural measures and plant modifications to minimize the potential for clogging of ECCS suppression pool suction strainers by debris (e.g., insulations, corrosion products, other particulates (paint chips, and concrete dusts)) generated during a LOCA. All licensees are requested to implement these actions by the end of the first refueling outage starting after January 1, 1997.	This issue is discussed in Subsection 6.2.2.2.6 and 6.2.2.3.	MIC-03-06-00059
BL 01-01	**CIRCUMFERENTIAL CRACKING OF REACTOR PRESSURE VESSEL HEAD PNENETRATION NOZZLE** In the light of the axial cracking discovered at the reactor pressure vessel head penetration nozzle in Oconee Nuclear Station Unit 1 (PWR), NRC requested all holders of operating licenses for PWR to provide the requested information.	N/A RV head does not have penetration for safety injection in the US-APWR. ISI for the reactor vessel head is discussed in Subsection 5.2.4.	DCD_06.03-95
BL 02-01	**REACTOR PRESSURE VESSEL HEAD DEGRADATION AND REACTOR COOLANT PRESSURE BOUNDARY INTEGRITY** This bulletin supplemented the BL-2001-01 and recommended that, for inspection of reactor pressure vessel head penetration , visual examinations should be provided with supplemental examination (by surface or volumetric examination). The NRC also requested all PWR licensees to provide information related to the inspection programs to ensure compliance with applicable regulatory requirements.	N/A RV head does not have penetration for safety injection in the US-APWR. ISI for the reactor vessel head is discussed in Subsection 5.2.4.	DCD_06.03-95

Table 6.3-4 Response of US-APWR to Generic Letters and Bulletins (Sheet 10 of 11)

No.	Regulatory Position	US-APWR Design
GL2004-02	**POTENTIAL IMPACT OF DEBRIS BLOCKAGE ON EMERGENCY RECIRCULATION DURING DESIGN BASIS ACCIDENTS AT PRESSURIZED-WATER REACTORS** NRC requested all PWR licensee to perform a mechanistic evaluation of the potential for the adverse effects of post-accident debris blockage and operation with debris-laden fluids to impede or prevent the recirculation functions of the ECCS and CSS following all postulated accidents for which the recirculation of these systems is required, using an NRC-approved methodology. Individual addressees may also use alternative methodologies to those already approved by the NRC; however, additional staff review may be required to assess the adequacy of such approaches. Implement any plant modifications that the above evaluation identifies as being necessary to ensure system functionality.	This issue is discussed in Subsection 6.2.2.2.6, 6.2.2.3~~, and following technical reports:~~ ~~MUAP-08001 "US-APWR Sump Strainer Performance"~~ ~~MUAP-08013 "US-APWR Sump Strainer Downstream Effects"~~
GL 2008-01	**MANAGING GAS ACCUMULATION IN EMERGENCY CORE COOLING, DECAY HEAT REMOVAL, AND CONTAINMENT SPRAY SYSTEM** The U.S. Nuclear Regulatory Commission (NRC) is issuing this generic letter (GL) to address the issue of gas accumulation in the emergency core cooling, decay heat removal (DHR), and containment spray systems for following purposes: (1) to request addressees to submit information to demonstrate that the subject systems are in compliance with the current licensing and design bases and applicable regulatory requirements, and that suitable design, operational, and testing control measures are in place for maintaining this compliance (2)to collect the requested information to determine if additional regulatory action is required	In the US-APWR, the following design provisions are provided in order to prevent void forming in the system: - To reduce gas intrusion into the safety-related pump system, fully submerged strainers are installed to function as a vortex suppressor. - To mitigate any possible gas buildup in the RCS, a temperature instrument is installed on the line from the Engineered Safety Feature to the RCS for detection in the MCR. - To prevent boric acid water containing dissolved nitrogen from flowing back from the accumulator tank to RHRS, RHRS return line and accumulator injection line are segregated. - Pump test line is provided in order to allow the dynamic venting of the system through the periodic pump full-flow testing.

MIC-03-06-00060

Table 6.3-4 Response of US-APWR to Generic Letters and Bulletins (Sheet 11 of 11)

No.	Regulatory Position	US-APWR Design
BL2003-01	**POTENTIAL IMPACT OF DEBRIS BLOCKAGE ON EMERGENCY SUMP RECIRCULATION AT PRESSURIZED-WATER REACTORS** NRC requested all PWR licensee to provide a response to state that the ECCS and CSS recirculation functions have been analyzed with respect to the potentially adverse post-accident debris blockage effects identified in this bulletin, taking into account the recent research findings described in the Discussion section, and are in compliance with all existing applicable regulatory requirements. Applicable Regulatory Guidance was Draft	Compliance with R.G 1.82 Rev.3 is discussed in Table 6.2.2-2~~, and following technical reports:~~ ~~MUAP-08001 "US-APWR Sump Strainer Performance"~~ ~~MUAP-08013 "US-APWR Sump Strainer Downstream Effects"~~

MIC-03-06-00061

Table 6.3-5 Safety Injection System Design Parameters (Sheet 1 of 3)

Description	Specification	
ECC/CS Strainer		
Type	Disk layer type	
Number	4 sets	
Surface Area	~~3,510~~2,754 ft^2 per train	MIC-03-06-00062
Material	Stainless Steel	
Design Flow	5,200 gpm per train	
Hole diameter of perforated plate	0.066 inch	
Debris Head Loss	~~4.7~~4.0 ft of water at ~~70~~120°F	MIC-03-06-00062
Equipment Class	2	
Seismic Category	I	
Safety Injection Pump		
Type	Horizontal multi-stage centrifugal pump	
Number	4	
Power Requirement	970 kW	
Design Flow	1,540 gpm	
Design Head	1,640 ft.	
Minimum Flow	265 gpm	
Design Pressure	2,135 psig	
Design Temperature	300°F	
Maximum Operating Temperature	Approximately 250°F	
Fluid	Boric Acid Water	
NPSH Available	~~21.9 ft. at 1,540 gpm~~24.9 ft. Note 3	MIC-03-06-00063
Design basis NPSH Required	~~15.7~~18.8 ft.	MIC-03-06-00063
Material of Construction	Stainless Steel	
Equipment Class	2	
Seismic Category	I	
Accumulator		
Type	Vertical Cylindrical Tank	
Number	4	
Capacity	3,180 ft^3 each	
Design Pressure	700 psig	
Design Temperature	300°F	
Normal Operating Pressure	Approximately 640 psig	
Normal Operating Temperature	70 ~ 120°F	

Table 6.3-5 Safety Injection System Design Parameters (Sheet 2 of 3)

Description	Specification
Accumulator Safety Valve	1,500 ft^3/min (N_2) at 700 psig
Accumulator N_2 Supply Line Safety Valve Capacity	1,500 ft^3/min (N_2) at 700 psig
Fluid	Boric Acid Water (Approximately 4,000 ppm)
Material of Construction	Carbon steel vessel with stainless steel cladding
Auxiliaries	Flow Damper
Water Volume	≥2,126 ft^3 Note 1
Large Flow Injection Volume	≥1,326.8 ft^3 Note 2
Equipment Class	2
Seismic Category	I
Accumulator Injection Line Resistance	
Piping and Valves Equivalent Length (L/D)	≥ 461.7 ≤ 564.3
Orifice and Pipe Exit Resistance Coefficient	≥ 1.99 ≤ 2.21
NaTB Basket	
Type	Rectangular
Number	23
Total Buffering Agent Quantity (minimum)	44,100 pounds
Design Pressure	Atmosphere
Design Temperature	300°F
Normal Operating Temperature	70 ~120°F
Buffering Agent	Sodium Tetraborate Decahydrate
Material of Construction	Stainless Steel
Equipment Class	2
Seismic Category	I

Note:

1. This volume does not include dead volume.
2. Nominal value is 1,342 ft^3 including 15.2 ft^3 for switchover volume uncertainty.
3. Detail of NPSH available is described in Reference 6.2-34.

DCD_14.03.04-49
MIC-03-06-00064

Table 6.3-5 Safety Injection System Design Parameters (Sheet 3 of 3)

Description	Specification	
NaTB Basket Container		
Type	Semi-rectangular	
Number	3	
Capacity	A:1155ft^3, B:925ft^3, C:925ft^3	
Design Pressure	Atmosphere	
Design Temperature	300°F	
Normal Operating Temperature	70 ~120°F	
Fluid	Boric Acid Water	
Material of Construction	Stainless Steel	
Design Code	ASME Section III, Class 2	
Equipment Class	2	
Seismic Category	I	
Refueling Water Storage Pit		
Type	Pit Type	
Number	1	
Capacity	~~81,230~~84.750 ft^3	MIC-03-06-00070
Design Pressure	Atmosphere Note 1	
Design Temperature	~~300~~270°F	MIC-03-06-00065
Temperature during normal operation	70 ~ 120°F	
Peak Temperature following LOCA	Approximately ~~250~~256°F	MIC-03-06-00065
Fluid	Boric Acid Water	
Material of Construction	Stainless Steel	
Equipment Class	2	
Seismic Category	I	

Note:

1. For structural design, an outside pressure occurring in accident 9.6 psi is reflected.

Table 6.3-6 Failure Modes and Effects Analysis - Safety Injection System (Sheet 1 of 12)

Component	Failure Mode	Plant Condition	Effect on System Operation	Failure Detection Method	Remarks
1. SI Pump A (B, C, and D analogous)	Failure to deliver flow	Small-break LOCA (not DVI LOCA)	No effect on plant safety because three, 50% SI pumps remain and only two are required.	SI pump operating information in the MCR and RSC includes flow, suction and discharge pressure, pump motor current, and RUN indication for each pump.	
		Small-break LOCA (DVI LOCA)	No effect on plant safety because three SI pumps remain. and only One SI pump spills and only one is required.		
		Large-break LOCA	No effect on plant safety because three, 50% SI pumps remain and only two are required.		
		Non-LOCA	No effect on plant safety because three, 50% SI pumps remain and only two pumps are required.		
		Safe shutdown; provide emergency boration and preserve RCS inventory	No effect on plant safety because three, 50% SI pumps remain and only two are required.		

Table 6.3-6 Failure Modes and Effects Analysis - Safety Injection System (Sheet 2 of 12)

Component	Failure Mode	Plant Condition	Effect on System Operation	Failure Detection Method	Remarks
1. SI Pump A (B, C, and D analogous) (cont.)	Failure to deliver flow with one SI train out of service	Small-break LOCA (not DVI LOCA)	No effect on plant safety because two, 50% SI pumps remain and only two are required.	SI pump operating information in the MCR and RSC includes flow, suction and discharge pressure, pump motor current, and RUN indication for each pump.	
		Small-break LOCA (DVI LOCA	No effect on safety because two SI pumps remain. One SI pump spills and only one is required.		
		Large-break LOCA	No effect on safety because two, 50% SI pumps remain and two pumps are required.		
		Non-LOCA	No effect on safety because two, 50% SI pumps remain and two are required.		
		Safe shutdown; provide emergency boration and preserve RCS inventory	No effect on safety because two, 50% SI pumps remain and two are required.		

Table 6.3-6 Failure Modes and Effects Analysis - Safety Injection System (Sheet 3 of 12)

Component	Failure Mode	Plant Condition	Effect on System Operation	Failure Detection Method	Remarks
2. Direct vessel safety injection line isolation valve SIS-MOV-011 (SIS-MOV-011B, C and D analogous)	Failure to throttle on demand	Safe shutdown	No effect on plant safety because associated SI pump A can be stopped. Three SI trains remain and only two are required.	Valve position indication in MCR and RSC.	
	Failure to close on demand	LOCA; re-align two SI pumps to hot leg injection	No effect on plant safety because remaining two SI trains can realign and only one is required.		

Table 6.3-6 Failure Modes and Effects Analysis - Safety Injection System (Sheet 4 of 12)

Component	Failure Mode	Plant Condition	Effect on System Operation	Failure Detection Method	Remarks
2. Direct vessel safety injection line isolation valve SIS-MOV-011 (SIS-MOV-011B, C and D analogous) (cont.)	Failure to throttle on demand with one SI train out of service	Safe shutdown	No effect on plant safety because SI pump A can be stopped. Two SI trains remain and two are required.	Valve position indication in MCR and RSC.	
	Failure to close on demand with one SI train out of service	LOCA; re-align one SI pump to hot leg injection	No effect on plant safety because remaining one SI train can realign and only one is required.		

Table 6.3-6 Failure Modes and Effects Analysis - Safety Injection System (Sheet 5 of 12)

Component	Failure Mode	Plant Condition	Effect on System Operation	Failure Detection Method	Remarks
3. Hot leg injection isolation valve SIS-MOV-014A (B, C and D analogous)	Failure to open on demand	LOCA; re-align two SI trains to hot leg injection	Failure prevents use of SI train A for hot leg injection. No effect on plant safety because the remaining two SI trains can realign and only one is required (two normally used).	Valve position indication in MCR and RSC.	
	Failure to open on demand while one SI train is out of service	LOCA; realign one SI train to hot leg injection	Failure prevents use of SI train A for hot leg injection. No effect on plant safety because one SI train can realign and only one is required.		

Table 6.3-6 Failure Modes and Effects Analysis - Safety Injection System (Sheet 6 of 12)

Component	Failure Mode	Plant Condition	Effect on System Operation	Failure Detection Method	Remarks
4. Accumulator discharge valve SIS-MOV-101A (SIS-MOV-101B, C and D analogous)	Failure to close on demand	Safe shutdown; isolate accumulator A from the RCS prior to depressurization to prevent introducing nitrogen into RCS	No effect on plant safety because the accumulator nitrogen gas volume can be vented to the containment atmosphere by opening the accumulator nitrogen discharge valve, and atmospheric vent SIS-MOV-121A or B.	Valve position indication in MCR and RSC.	Valves SIS-MOV-121A and B are parallel vents to the atmosphere and are powered from different Class 1E supplies.
	Failure to close on demand with a Class 1E supply out of service		No effect on plant safety because the accumulator nitrogen gas volume can be vented to the containment atmosphere by opening the accumulator nitrogen discharge valve, and atmospheric vent SIS-MOV-121A or B.		

Table 6.3-6 Failure Modes and Effects Analysis - Safety Injection System (Sheet 7 of 12)

Component	Failure Mode	Plant Condition	Effect on System Operation	Failure Detection Method	Remarks
5. Accumulator nitrogen discharge valve SIS-MOV-121A (SIS-MOV-121B analogous)	Failure to open on demand	Safe shutdown; vent accumulator A, B, C, or D of nitrogen prior to RCS depressurization	No effect on plant safety because the common nitrogen vents to atmosphere valves SIS-MOV-121A and B are connected in parallel; only one valve is needed to vent the nitrogen from accumulators.	Valve position indication in MCR and RSC.	Valve SIS-MOV-101A and B can be on both electrical train A and B. Valve SIS-MOV-101C and D can be on electrical train C and D. Therefore, if one electrical train is out of service, Valve SIS-MOV-101A can be closed.
	Failure to open on demand with one Class-1E electrical supply out of service		No effect on plant safety because valve SIS-MOV-101A can be closed (power from alternate Class-1E supply).		

Table 6.3-6 Failure Modes and Effects Analysis - Safety Injection System (Sheet 8 of 12)

Component	Failure Mode	Plant Condition	Effect on System Operation	Failure Detection Method	Remarks
6. Accumulator nitrogen supply line isolation valve SIS-MOV-125A (SIS-MOV-125B, C and D analogous)	Failure to open on demand	Safe shutdown; vent accumulator nitrogen prior to RCS depressurization	No effect on plant safety because the accumulator nitrogen is not normally vented in safe shutdown. (Accumulator discharge valve SIS-MOV-101A is closed on RCS depressurization to prevent introducing nitrogen into the RCS on shutdown. See Item 4 above).	Valve position indication in MCR and RSC.	Valve SIS-MOV-101A and B, and valve SIS-MOV-125C and D can be on both electrical train A and B. Valve SIS-MOV-101C and D, and valve SIS-MOV-125A and B can be on both electrical train C and D.
	Failure to open on demand with one electrical supply out of service		No effect on plant safety because the accumulator nitrogen is not normally vented in safe shutdown. (Accumulator discharge valve SIS-MOV-101A is closed on RCS depressurization to prevent introducing nitrogen into the RCS on shutdown. See Item 4 above).		

Table 6.3-6 Failure Modes and Effects Analysis - Safety Injection System (Sheet 9 of 12)

Component	Failure Mode	Plant Condition	Effect on System Operation	Failure Detection Method	Remarks
7. Emergency letdown line isolation valves SIS-MOV-031A and SIS-MOV-032A (SIS-MOV-031D and SIS-MOV-032D analogous)	Failure to open on demand	Safe shutdown; emergency letdown (RWSP feed and bleed)	No effect on plant safety because redundant emergency letdown from the RCS loop D is available and adequate for safe shutdown.	Open/close position indication MCR and RSC.	Four emergency letdown isolation valves are on different dc power electrical trains. On line maintenance of dc power electrical train is prohibited.
8. I & C for SI initiation	Failure to deliver fluid due to loss of ECCS actuation signal	LOCA, Non-LOCA	Same as Item 1.	Same as Item 1.	
	Failure to deliver fluid due to loss of ECCS actuation signal with one SI train out of service.				

Table 6.3-6 Failure Modes and Effects Analysis - Safety Injection System (Sheet 10 of 12)

Component	Failure Mode	Plant Condition	Effect on System Operation	Failure Detection Method	Remarks
9. Class 1E ac power source	Failure to deliver fluid due to loss of ac power.	LOCA, Non-LOCA, Safe Shutdown	Same as Item 1.	Same as Item 1.	
	Failure to deliver fluid due to loss of ac power with one SI train out of service.				
10. Class 1E dc power source	Failure to open Emergency letdown line isolation valves on demand due to loss of dc power.	Safe Shutdown	Same as Item 7.	Same as Item 7. Four emergency letdown isolation valves are on different dc power electrical train.	
11. Component Cooling Water	Failure to deliver fluid due to loss of Component Cooling Water	LOCA, Non-LOCA Safe Shutdown	Same as Item 1.	Same as Item 1.	
	Failure to deliver fluid due to loss of Component Cooling Water with one SI train out of service.				

Table 6.3-6 Failure Modes and Effects Analysis - Safety Injection System (Sheet 11 of 12)

Component	Failure Mode	Plant Condition	Effect on System Operation	Failure Detection Method	Remarks
12. Safeguard Component Area HVAC	Failure to deliver fluid due to loss of Safeguard Component Area HVAC	LOCA, Non-LOCA Safe Shutdown	Same as Item 1.	Same as Item 1.	
	Failure to deliver fluid due to loss of Safeguard Component Area HVAC with one SI train out of service				
13. I &C for hot leg injection isolation valve SIS-MOV-014A Control (B, C and D analogous)	Failure to deliver fluid due to one SI pump run out caused by Inadvertent open off demand	Small-break LOCA (not DVI LOCA)	No effect on plant safety because three, 50% SI pumps remain and only two are required.	Valve position indication in MCR and RSC. SI pump operating information in the MCR and RSC includes flow, suction and discharge pressure, pump motor current, and RUN indication for each pump.	
		Small-break LOCA (DVI LOCA)	No effect on plant safety because three SI pumps remain and only One SI pump spills and only one is required.		
		Large-break LOCA	No effect on plant safety because three, 50% SI pumps remain and only two are required.		
		Non-LOCA	No effect on plant safety because three, 50% SI pumps remain and only two pumps are required.		
		Safe shutdown; provide emergency boration and preserve RCS inventory	No effect on plant safety because three, 50% SI pumps remain and only two are required.		

Table 6.3-6 Failure Modes and Effects Analysis - Safety Injection System (Sheet 12 of 12)

Component	Failure Mode	Plant Condition	Effect on System Operation	Failure Detection Method	Remarks
13. I &C for hot leg injection isolation valve SIS-MOV-014A Control (B, C and D analogous) (cont.)	Failure to deliver fluid due to one SI pump run out cased by inadvertent open off demand with one SI train out of service	Small-break LOCA (not DVI LOCA)	No effect on plant safety because two, 50% SI pumps remain and only two are required.	Valve position indication in MCR and RSC. SI pump operating information in the MCR and RSC includes flow, suction and discharge pressure, pump motor current, and RUN indication for each pump.	
		Small-break LOCA (DVI LOCA)	No effect on safety because two SI pumps remain. One SI pump spills and only one is required.		
		Large-break LOCA	No effect on safety because two, 50% SI pumps remain and two pumps are required.		
		Non-LOCA	No effect on safety because two, 50% SI pumps remain and two are required.		
		Safe shutdown; provide emergency boration and preserve RCS inventory	No effect on safety because two, 50% SI pumps remain and two are required.		

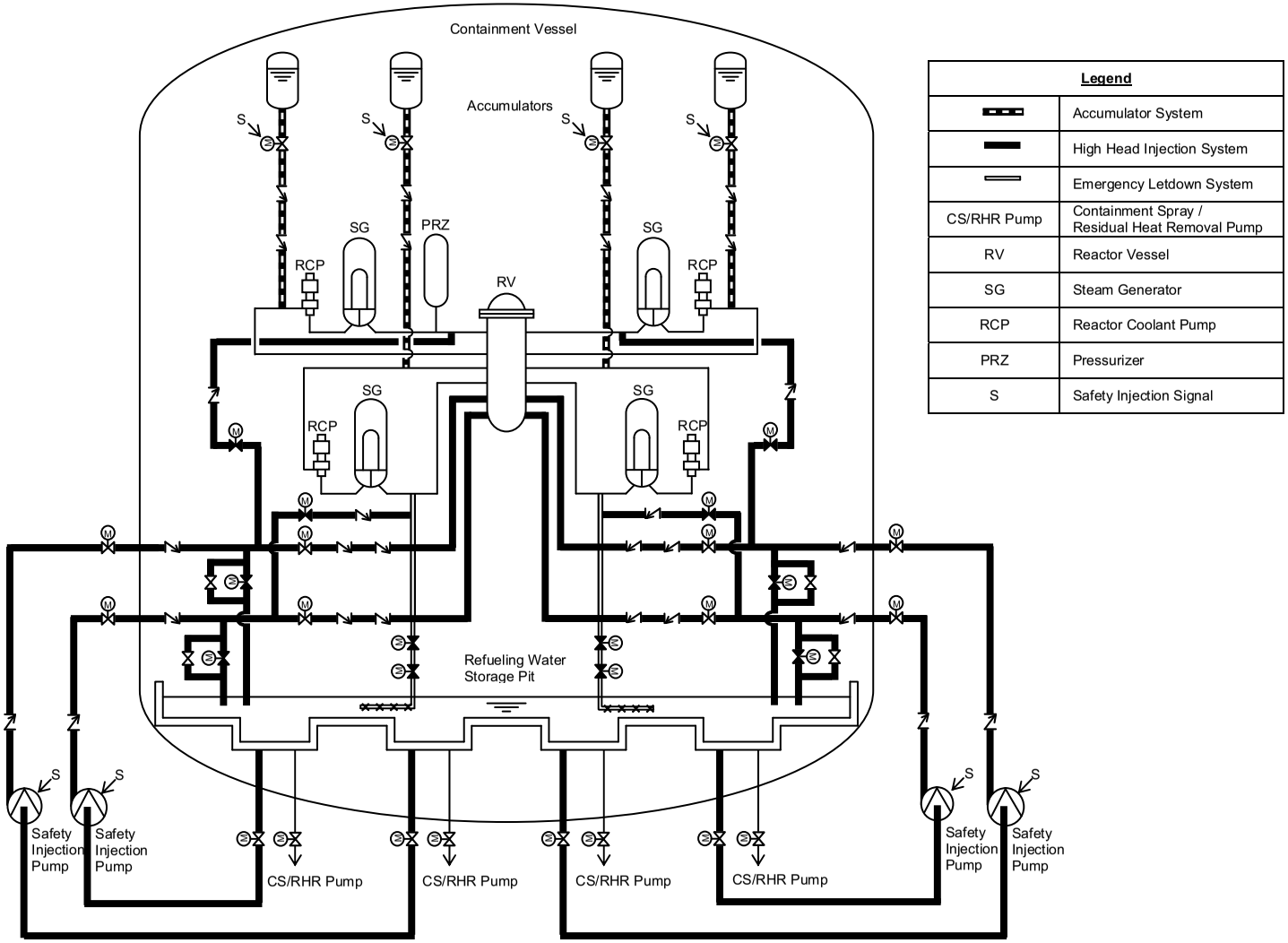

Figure 6.3-1 Emergency Core Cooling System Schematic Flow Diagram

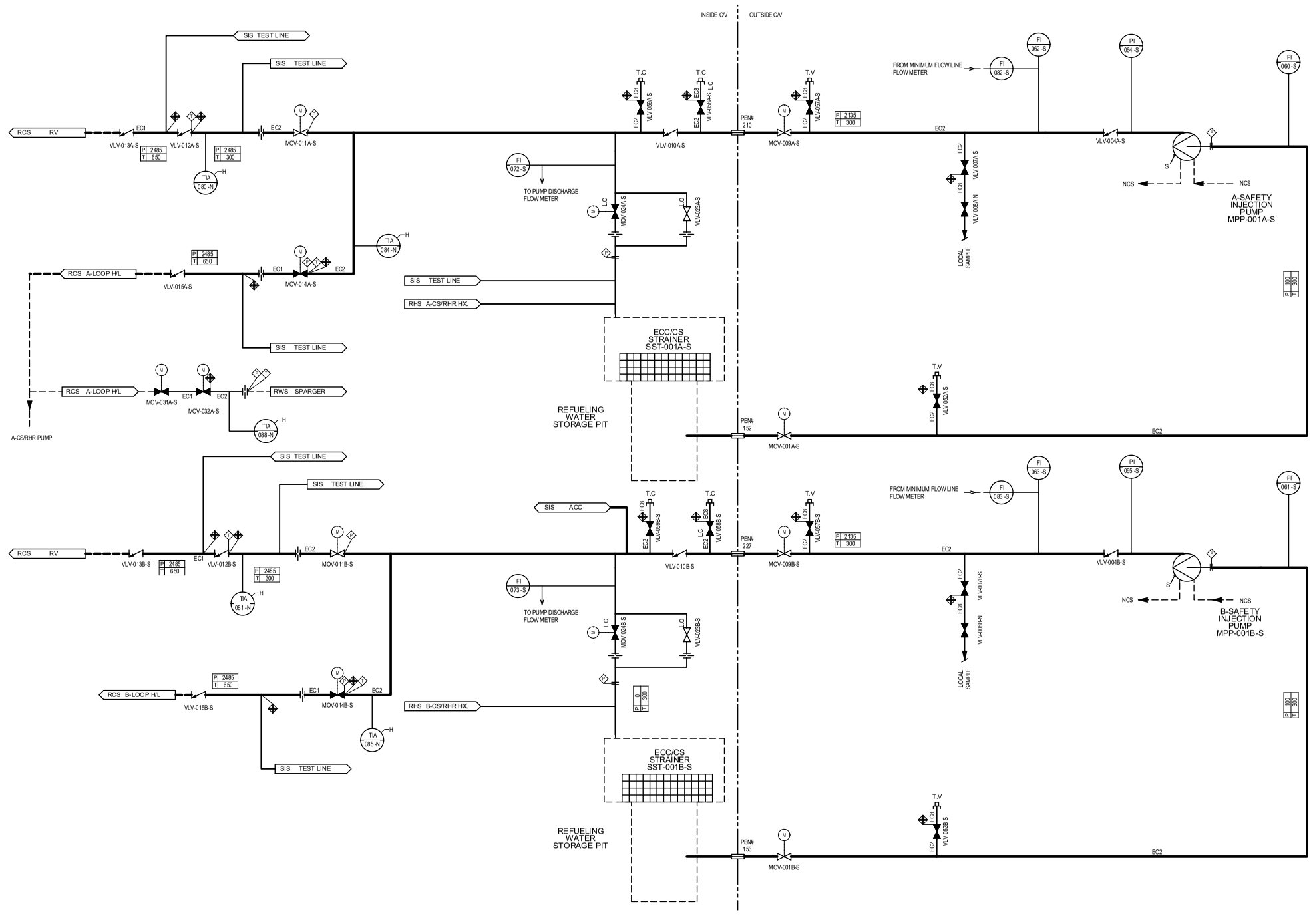

Figure 6.3-2 ECCS Piping and Instrumentation Diagram (Sheet 1 of 4)

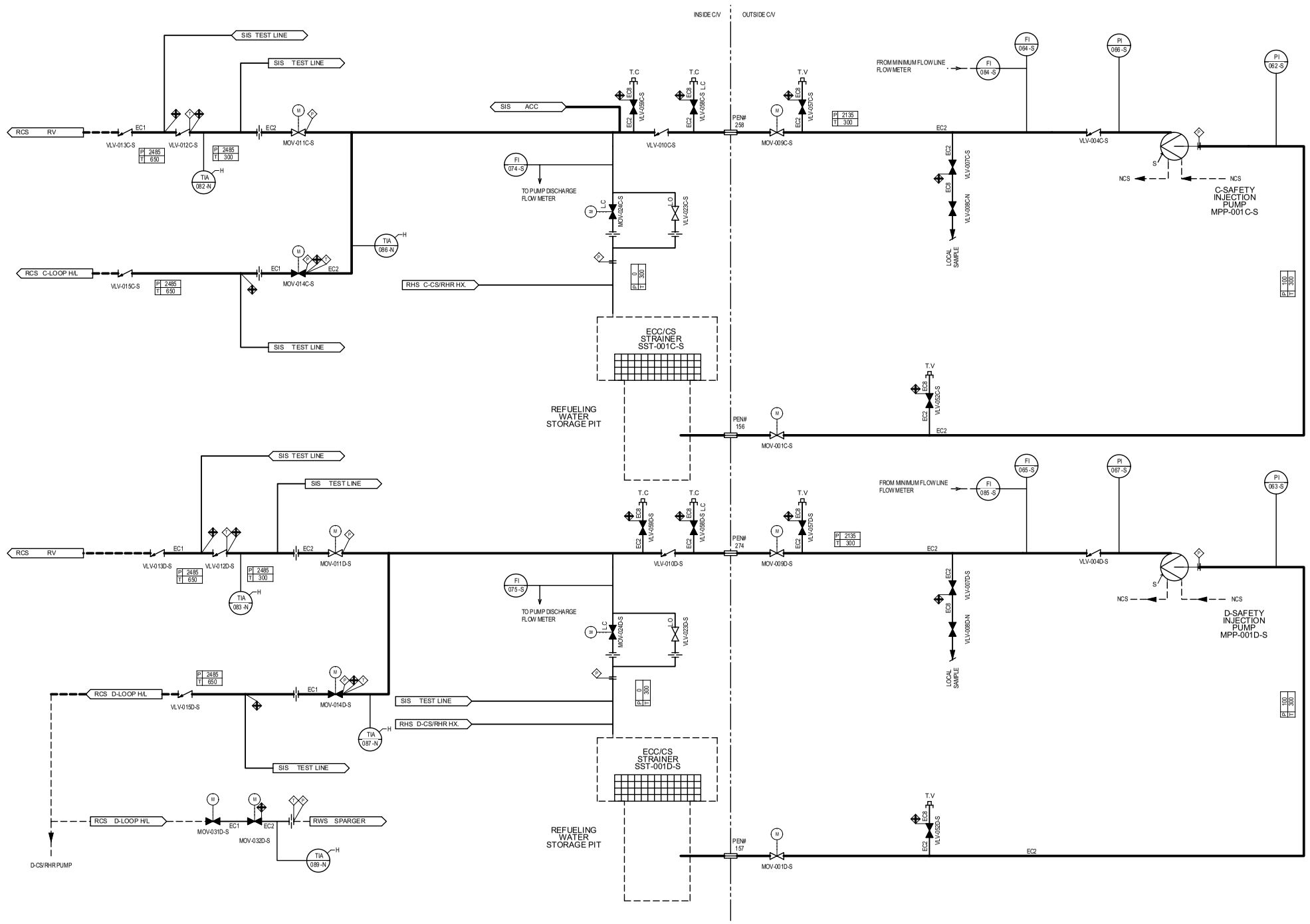

Figure 6.3-2 ECCS Piping and Instrumentation Diagram (Sheet 2 of 4)

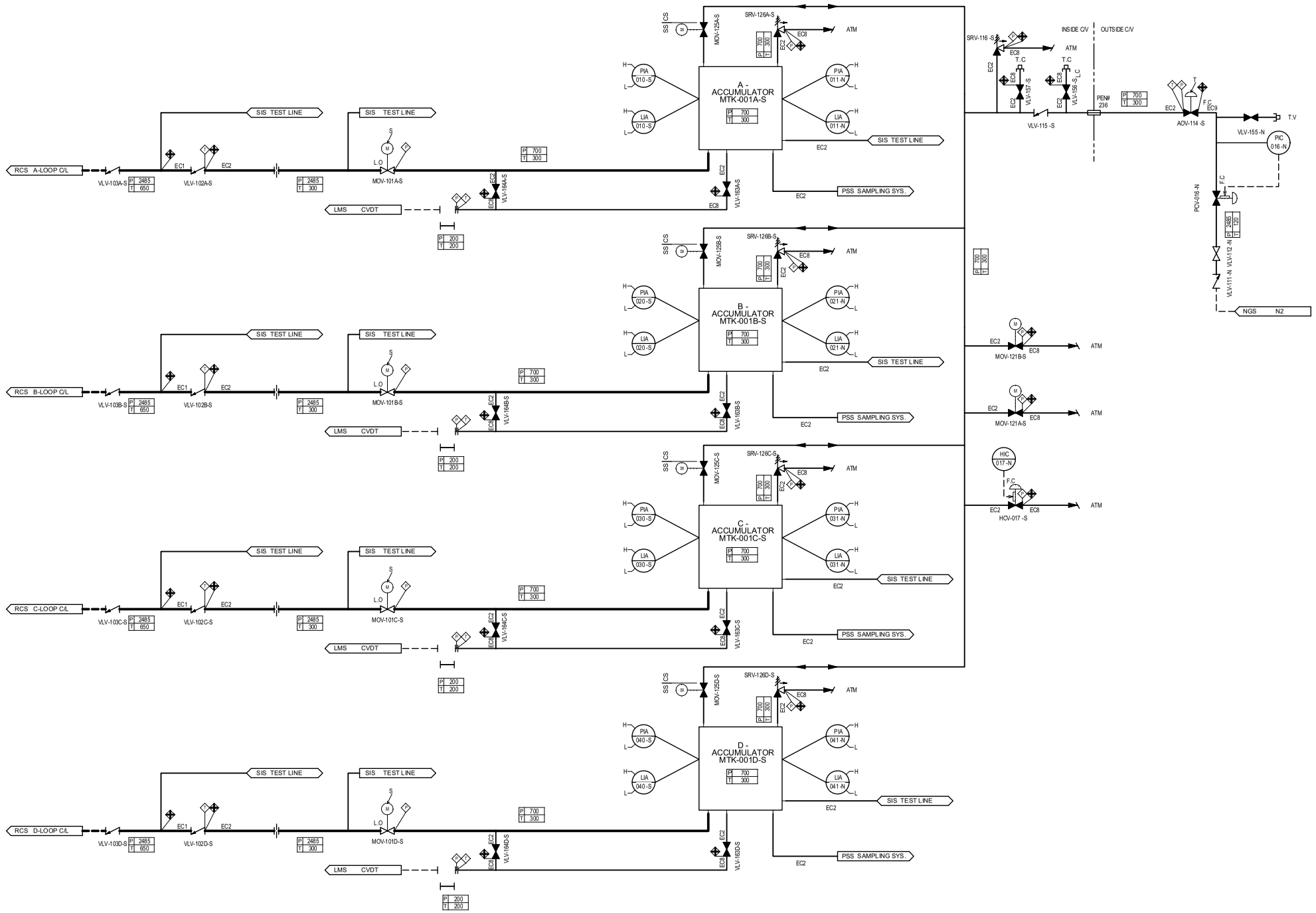

Figure 6.3-2 ECCS Piping and Instrumentation Diagram (Sheet 3 of 4)

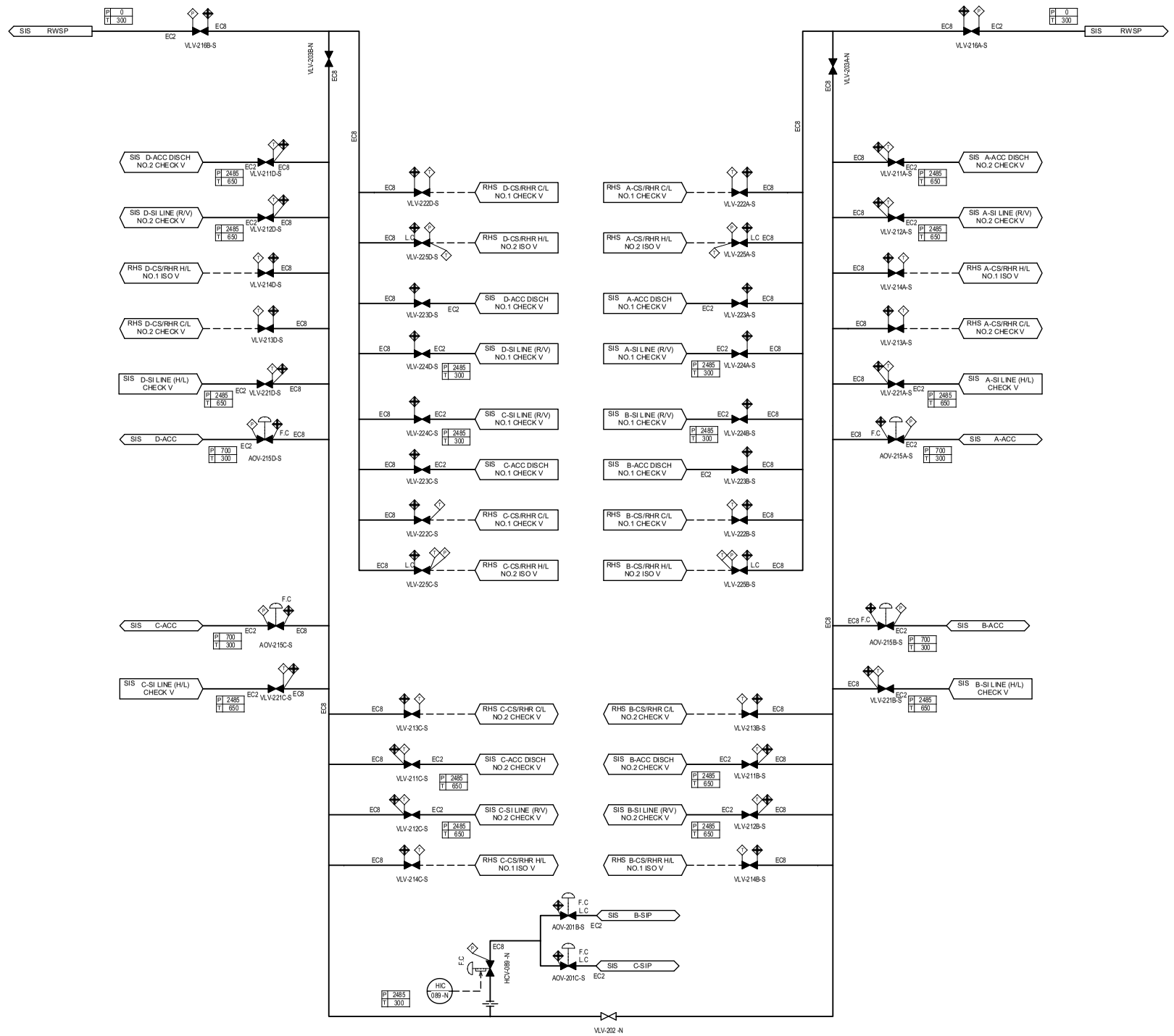

Figure 6.3-2 ECCS Piping and Instrumentation Diagram (Sheet 4 of 4)

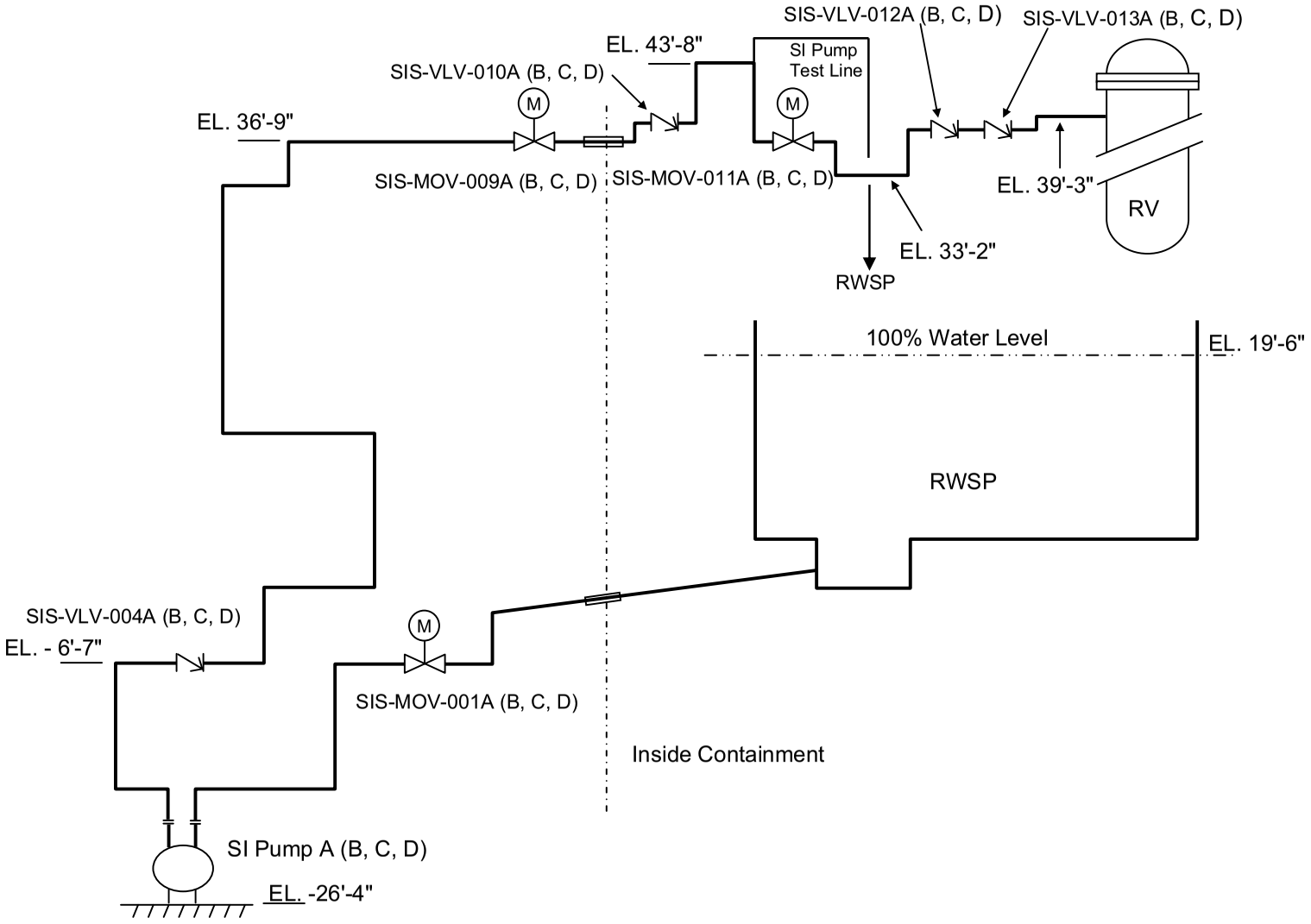

Figure 6.3-3 SIS Elevation Diagram

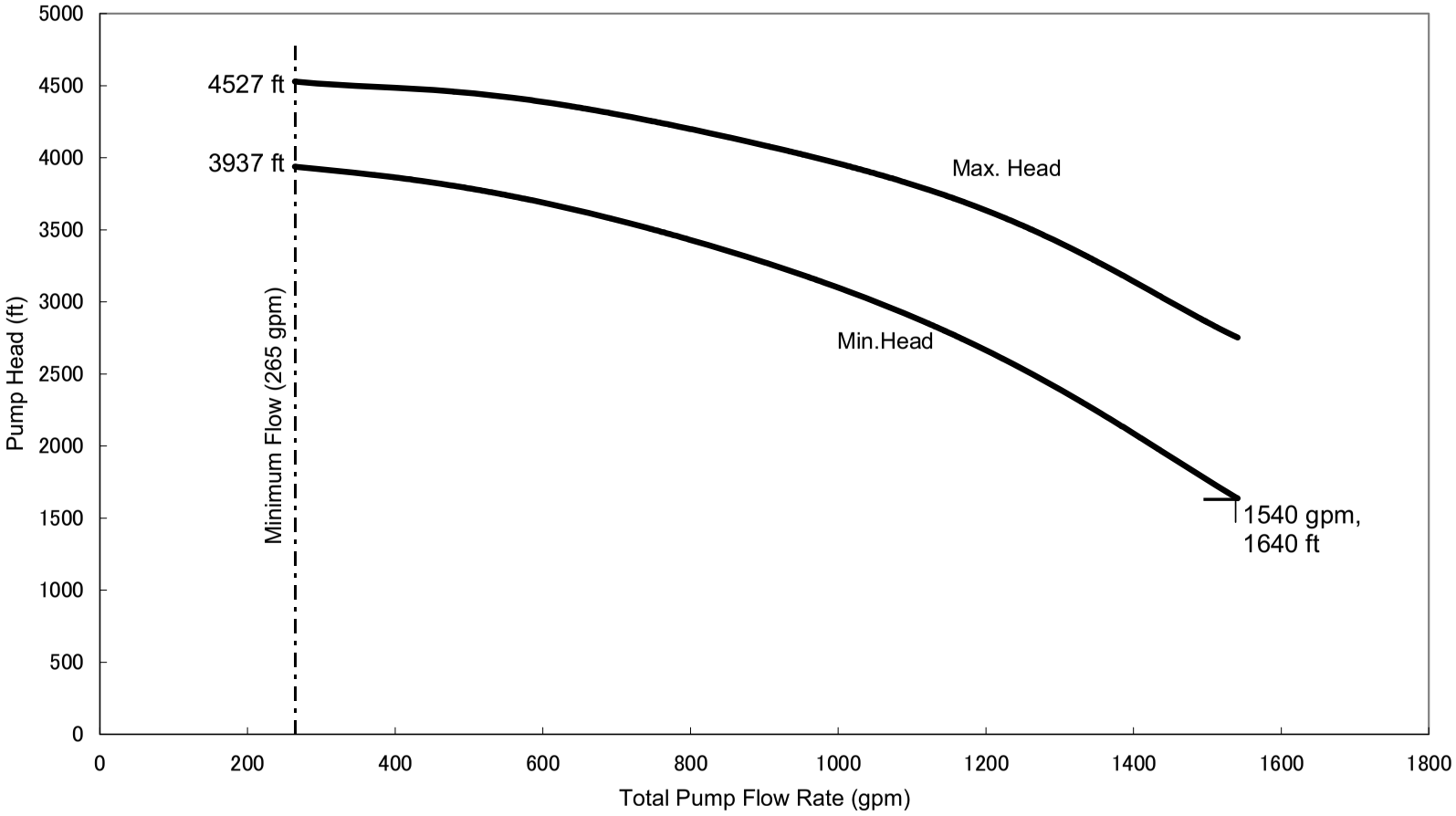

Figure 6.3-4 Safety Injection Pump Performance Flow Requirement

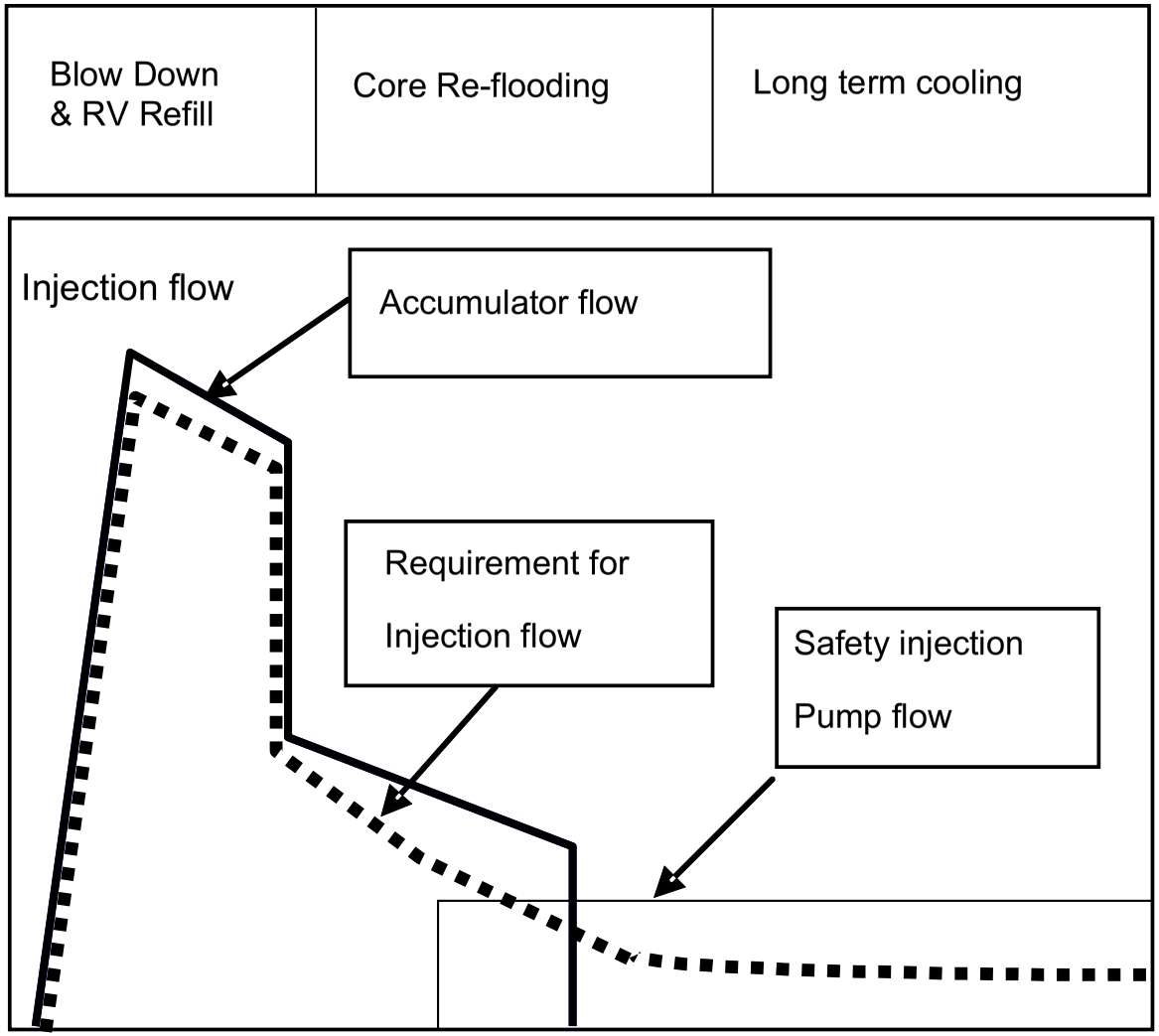

Figure 6.3-5 Accumulator Flow Schematic Characteristics

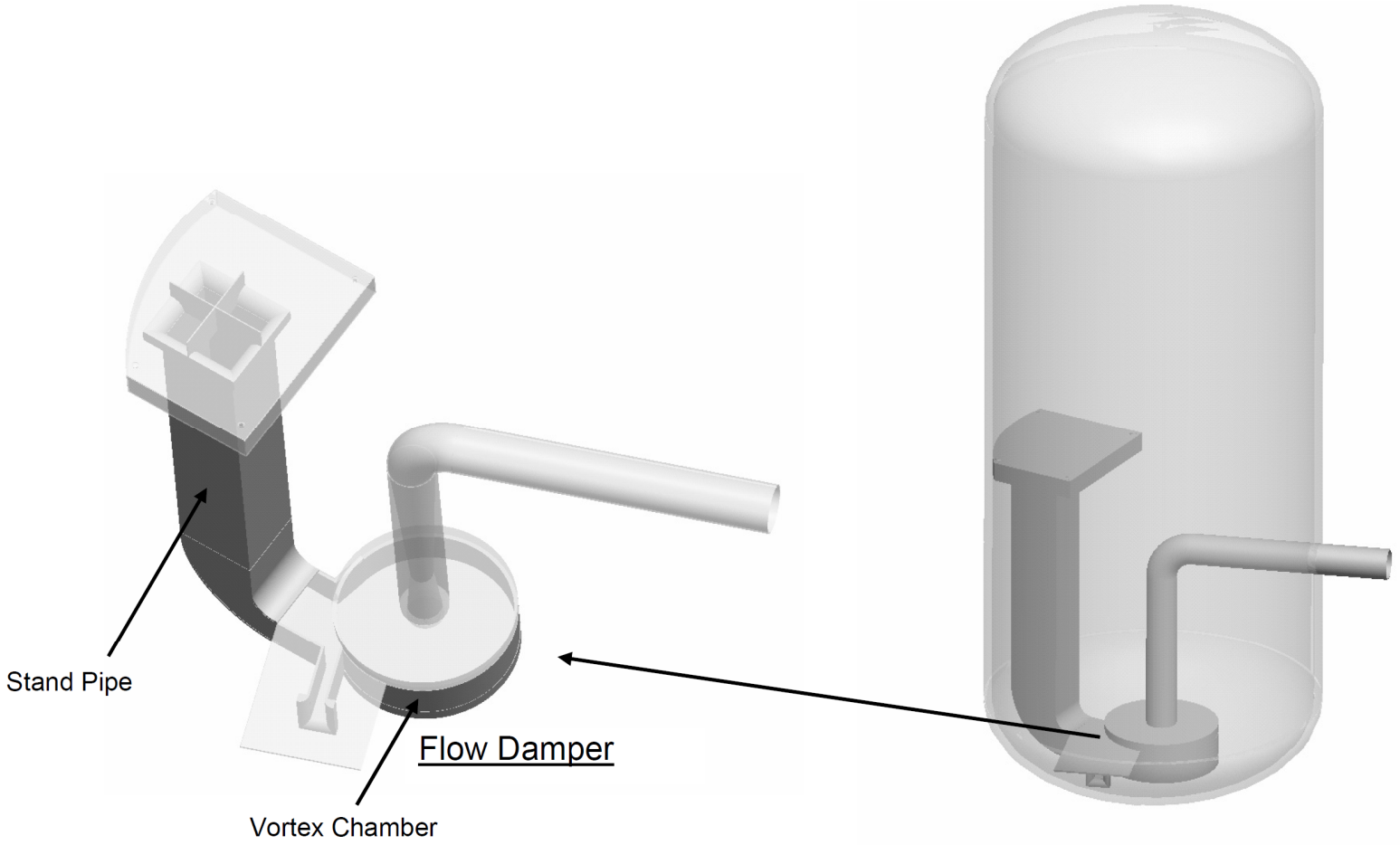

Figure 6.3-6 Overview of the Accumulator

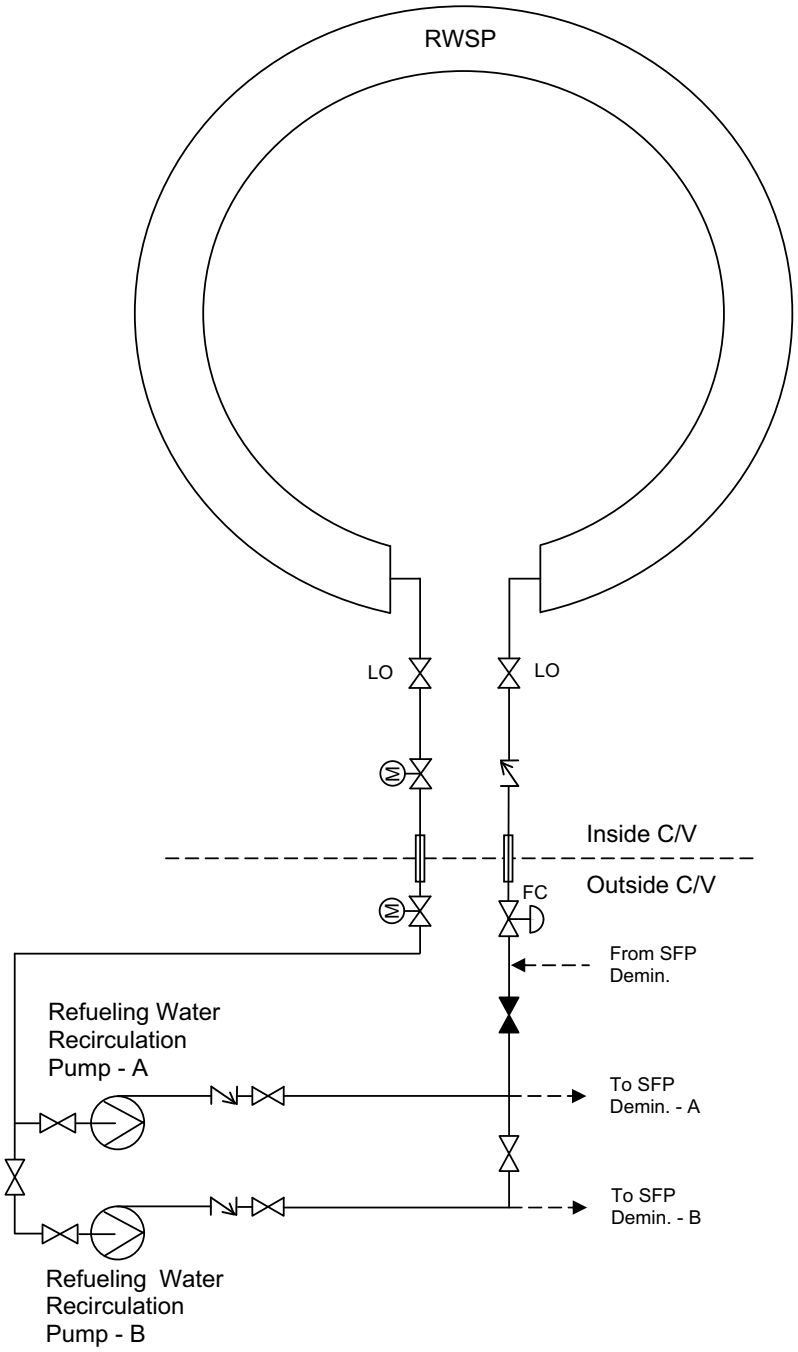

Figure 6.3-7 Refueling Water Storage System

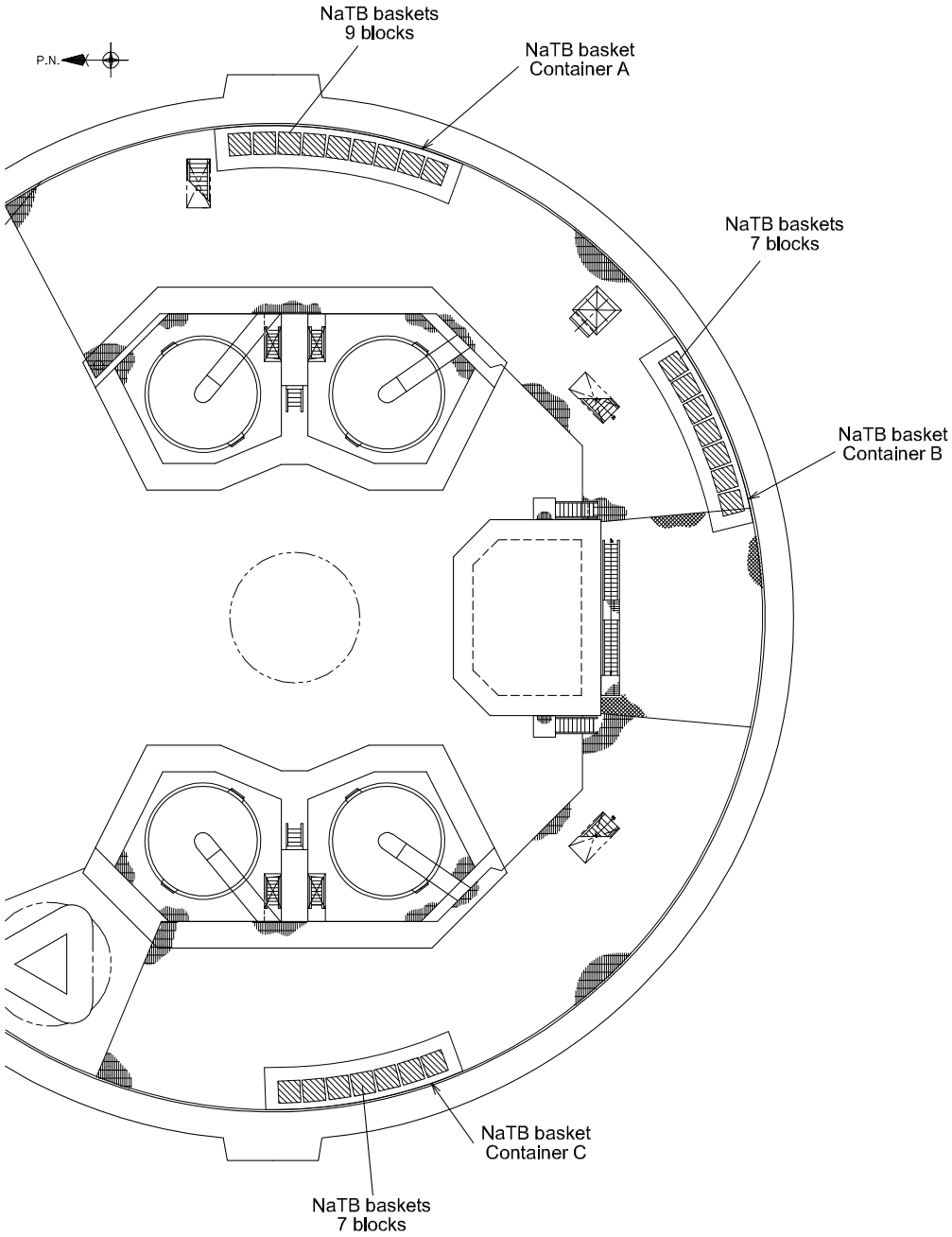

Figure 6.3-8 NaTB Baskets Plan View

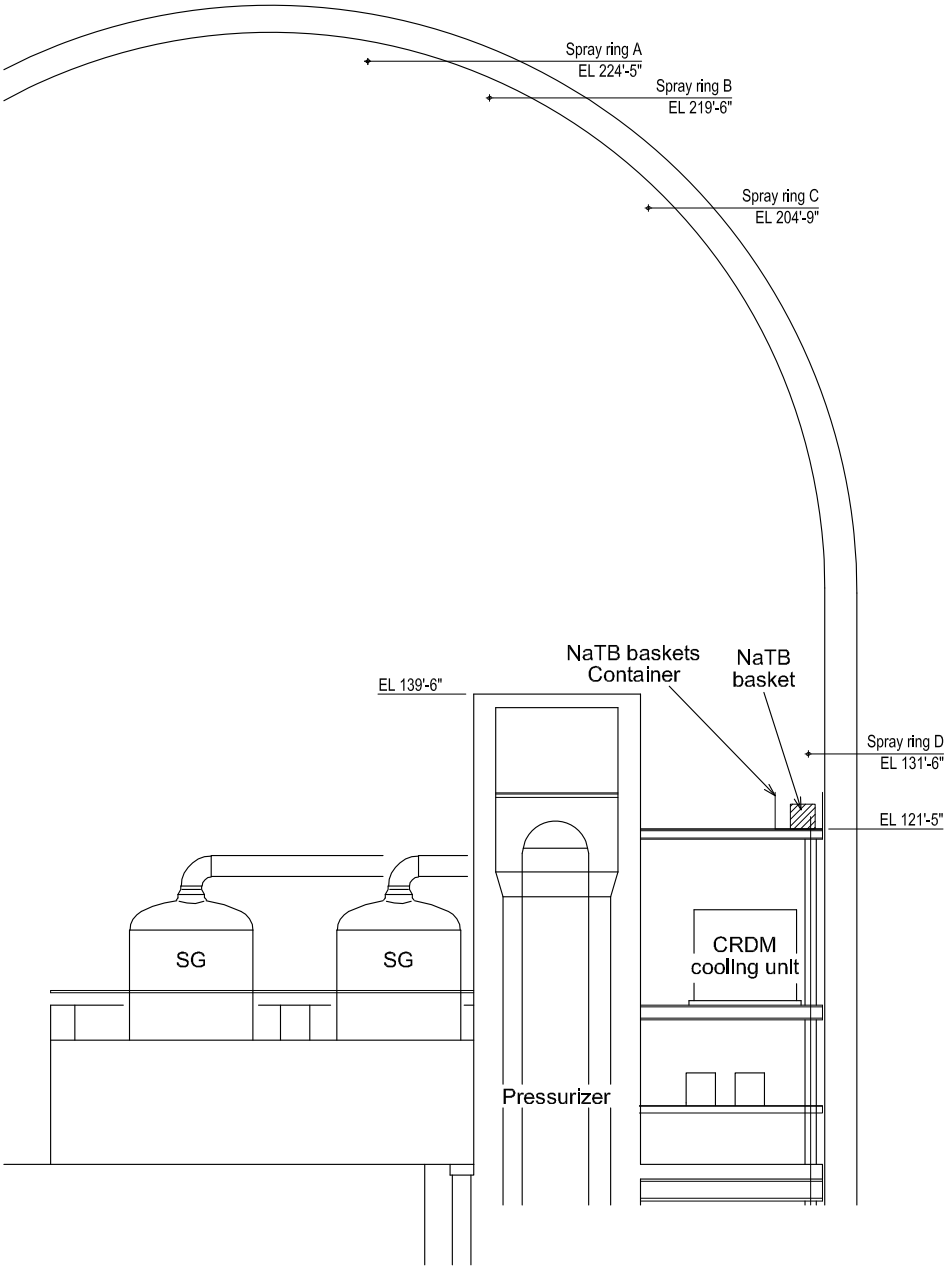

Figure 6.3-9 NaTB Baskets Sectional View

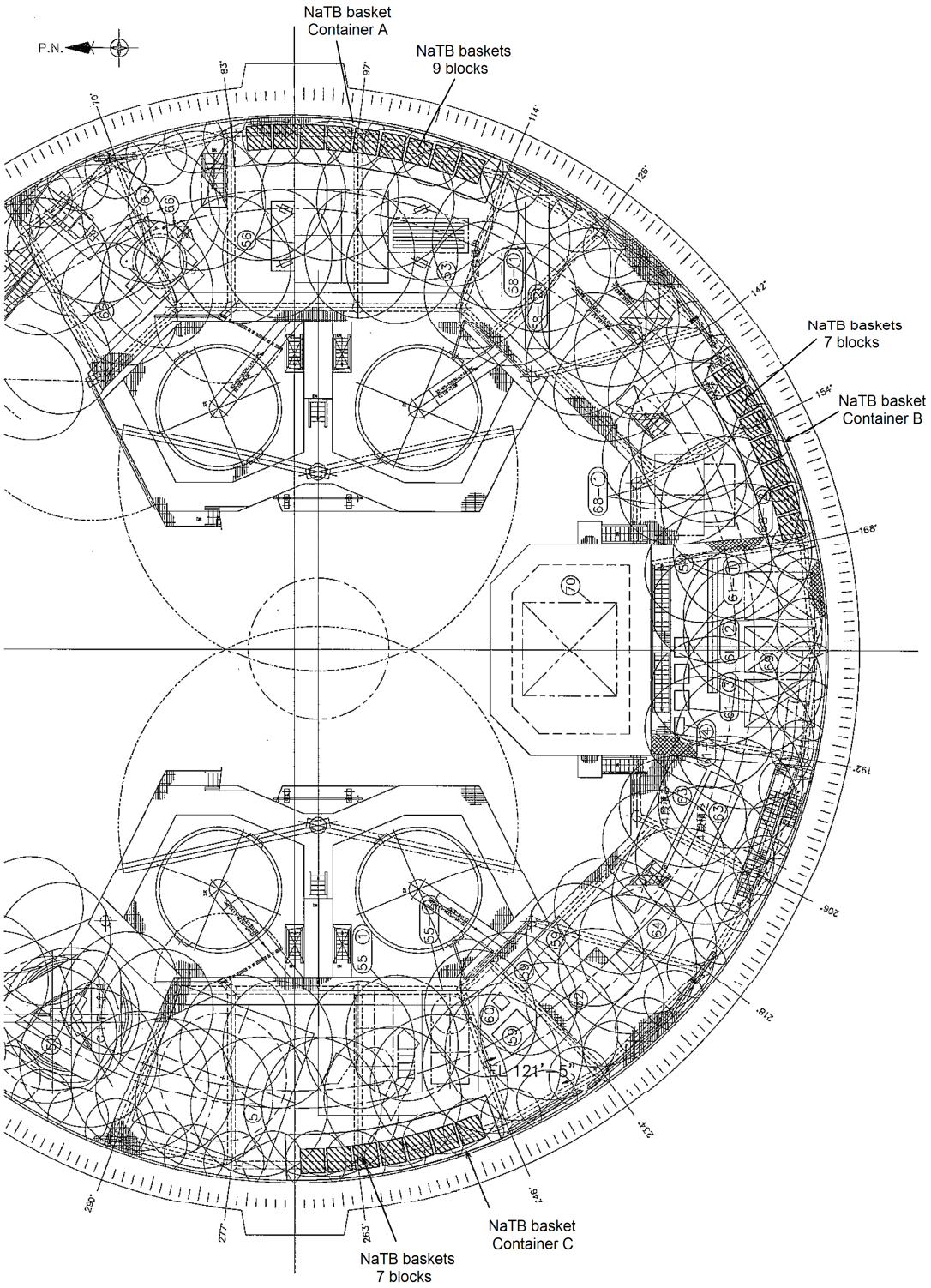

Figure 6.3-10 Containment Spray Pattern Plan View at the NaTB Basket Installation Level

DCD_06.03-88

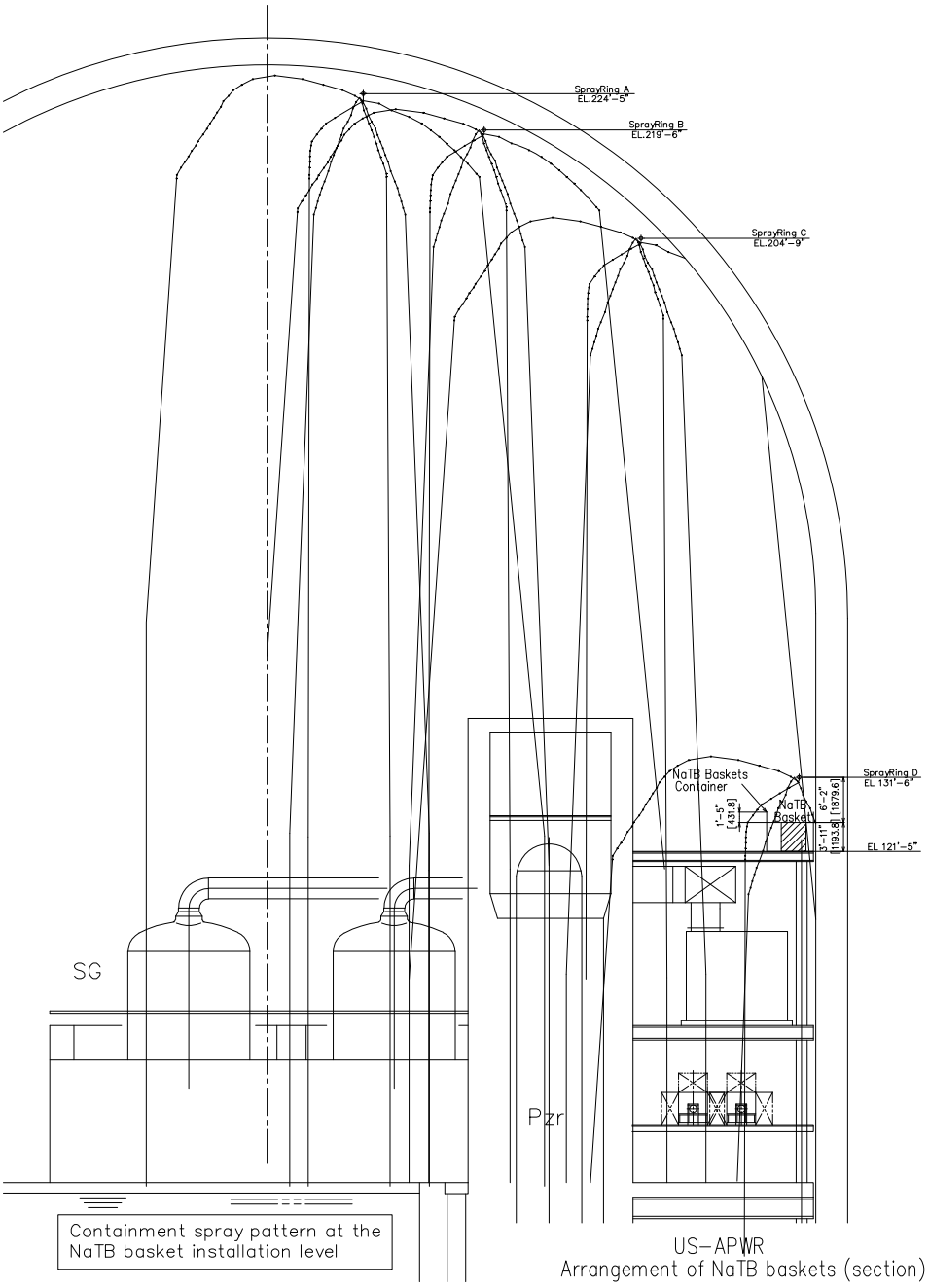

Figure 6.3-11 Containment Spray Pattern Sectional View at the NaTB Basket Installation Level

MIC-03-06-00070

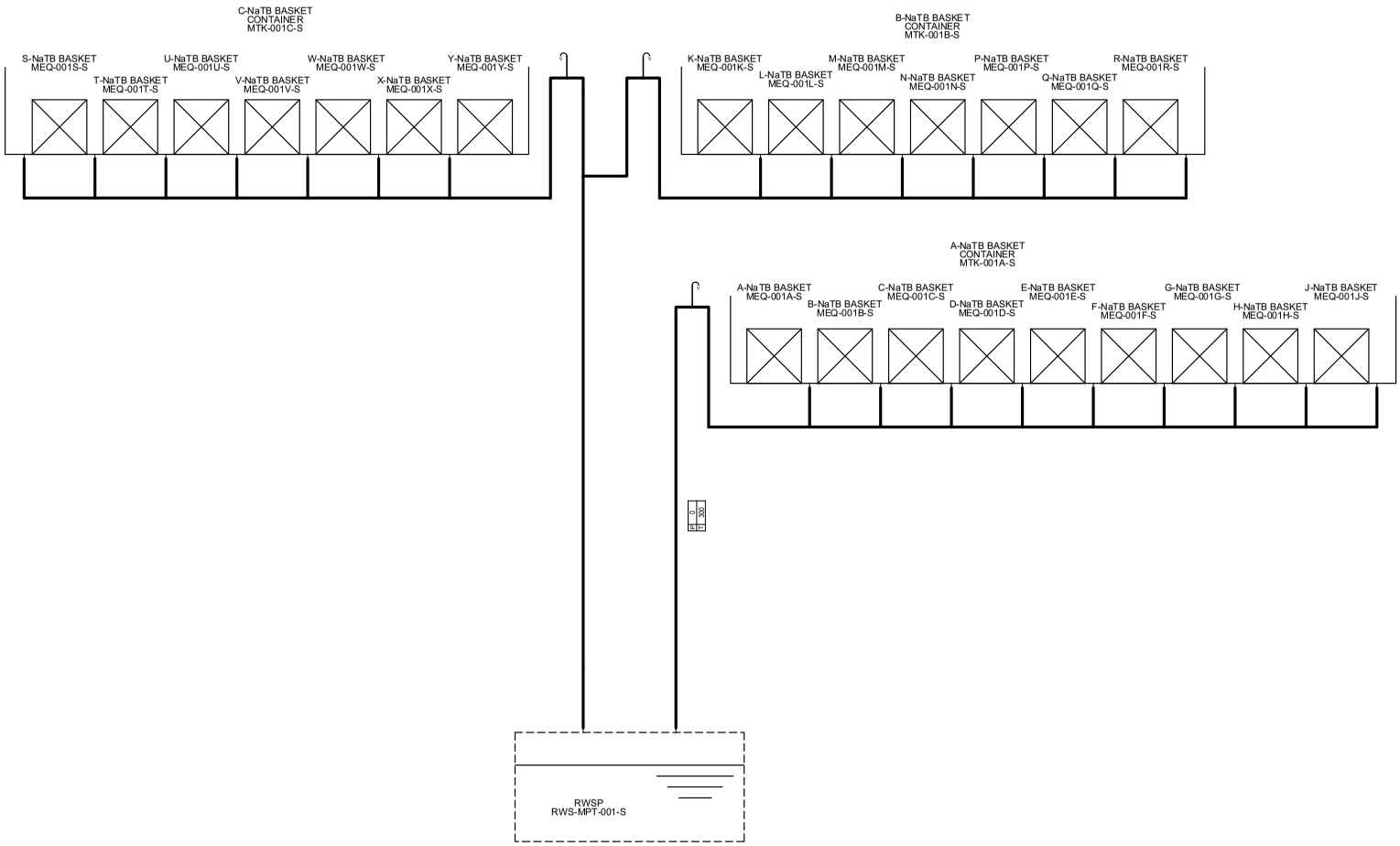

Figure 6.3-12 NaTB Solution Transfer Piping Diagram

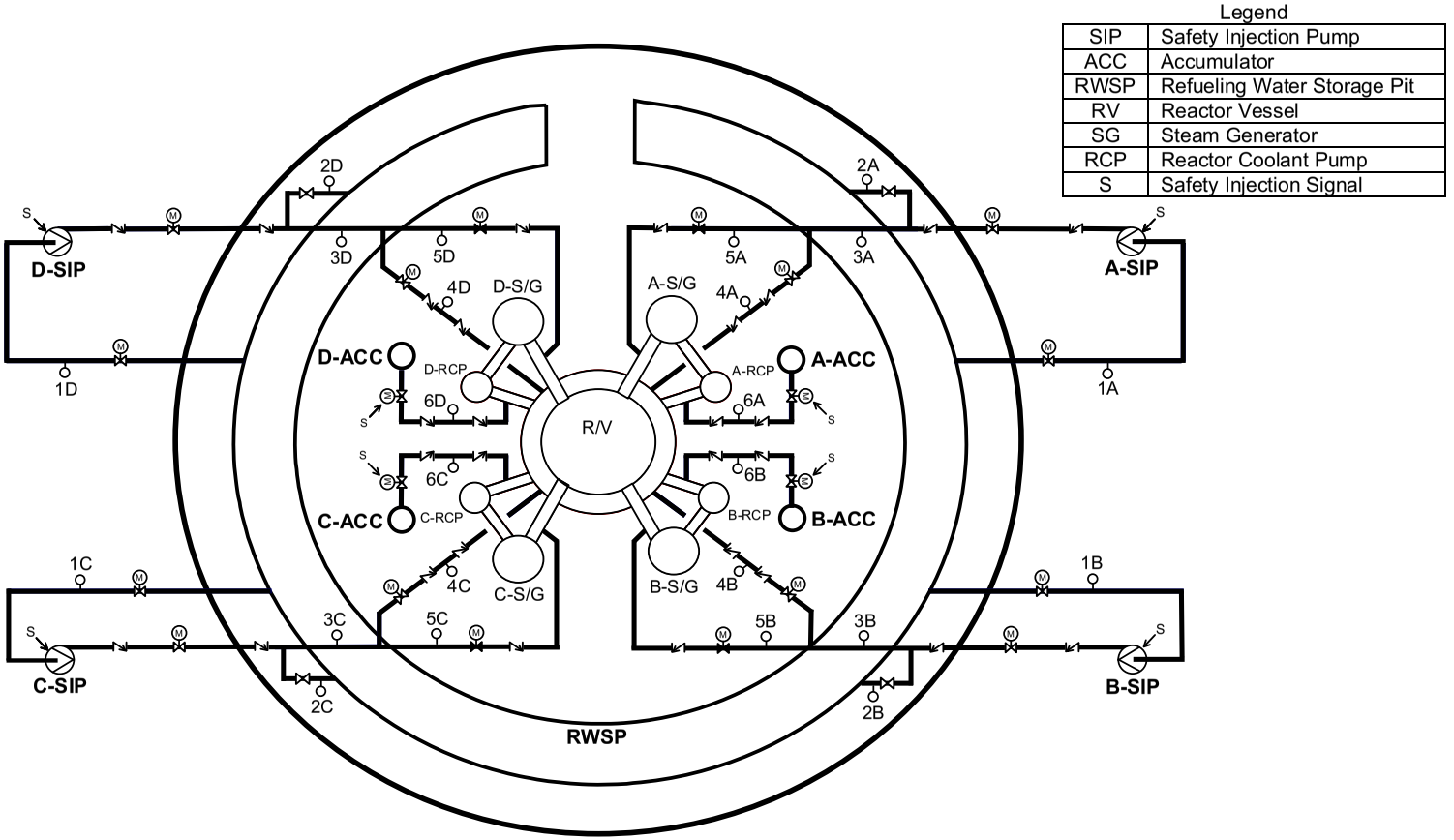

Location	1A	2A	3A	4A	5A	6A	1B	2B	3B	4B	5B	6B	1C	2C	3C	4C	5C	6C	1D	2D	3D	4D	5D	6D
Flow Rate (gpm)	1540	210	1330	1330	0	19000	1540	210	1330	1330	0	19000	1540	210	1330	1330	0	19000	1540	210	1330	1330	0	19000

Figure 6.3-13 ECCS Process Flow Diagram (RV Injection)

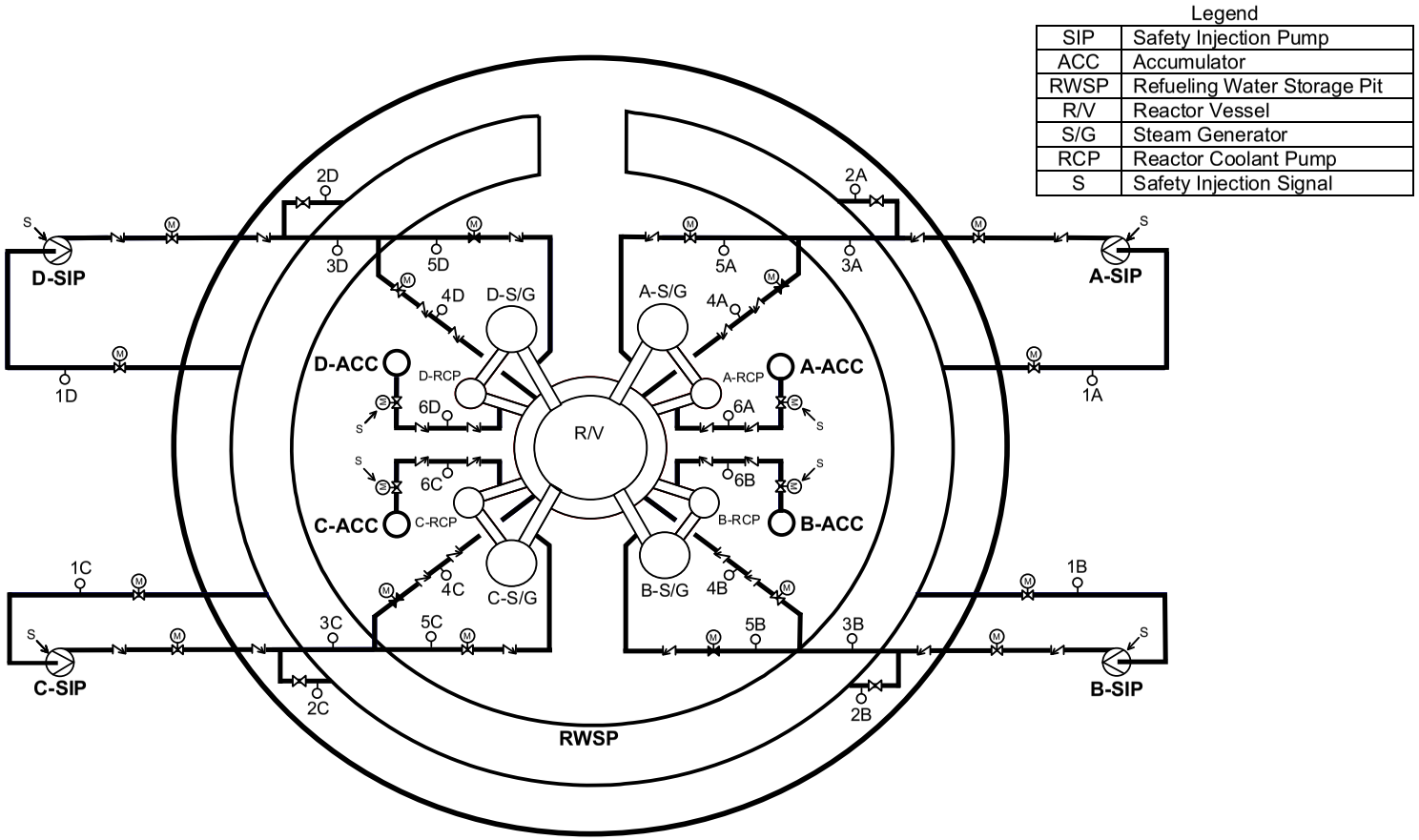

Location	1A	2A	3A	4A	5A	6A	1B	2B	3B	4B	5B	6B	1C	2C	3C	4C	5C	6C	1D	2D	3D	4D	5D	6D
Flow (gpm)	1540	210	1330	0	1330	0	1540	210	1330	1330	0	0	1540	210	1330	0	1330	0	1540	210	1330	1330	0	0

Figure 6.3-14 ECCS Process Flow Diagram (Simultaneous RV and hot leg Injection)

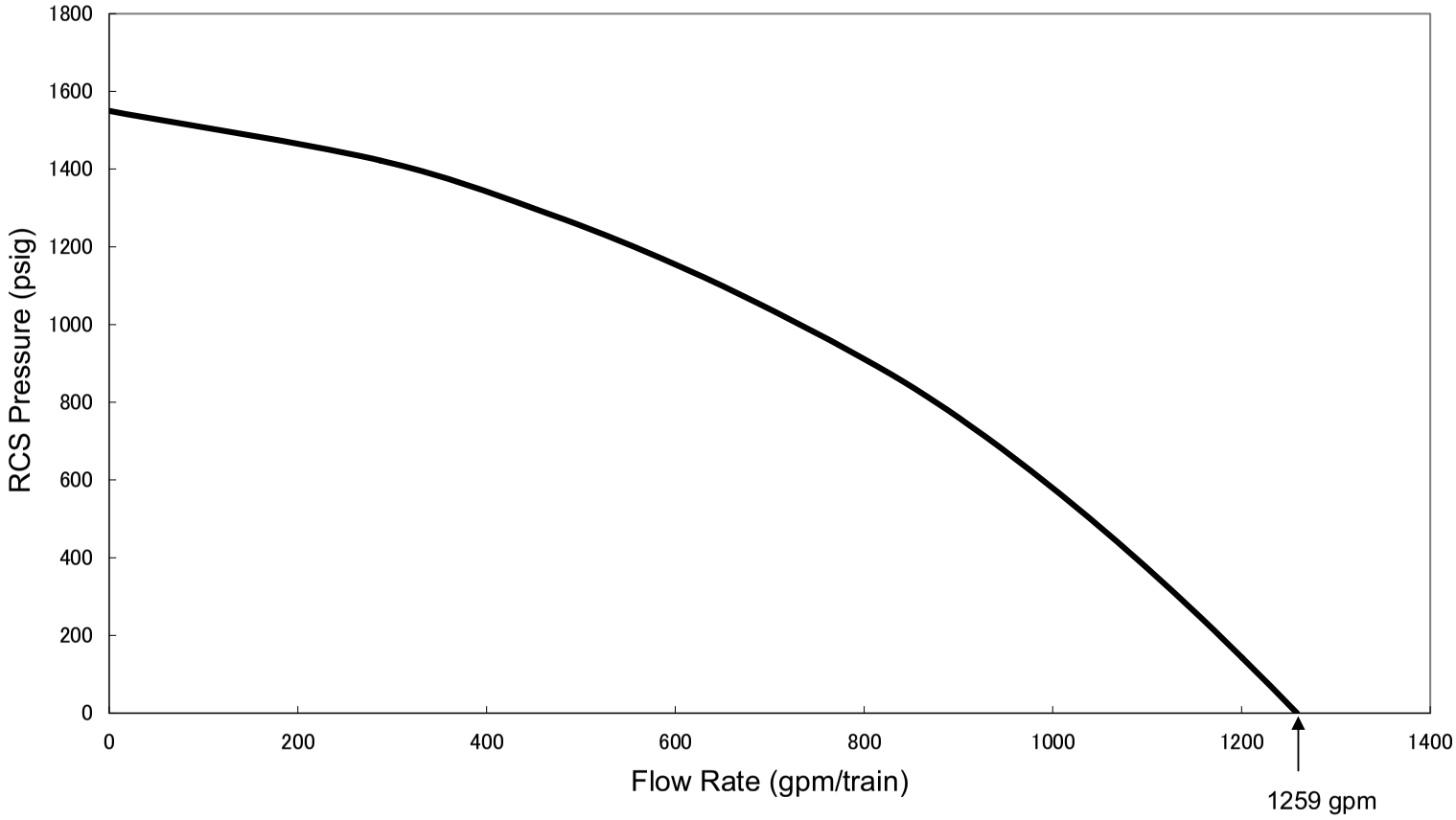

Figure 6.3-15 High Head Safety Injection Flow Characteristic Curve (Minimum Safeguards)

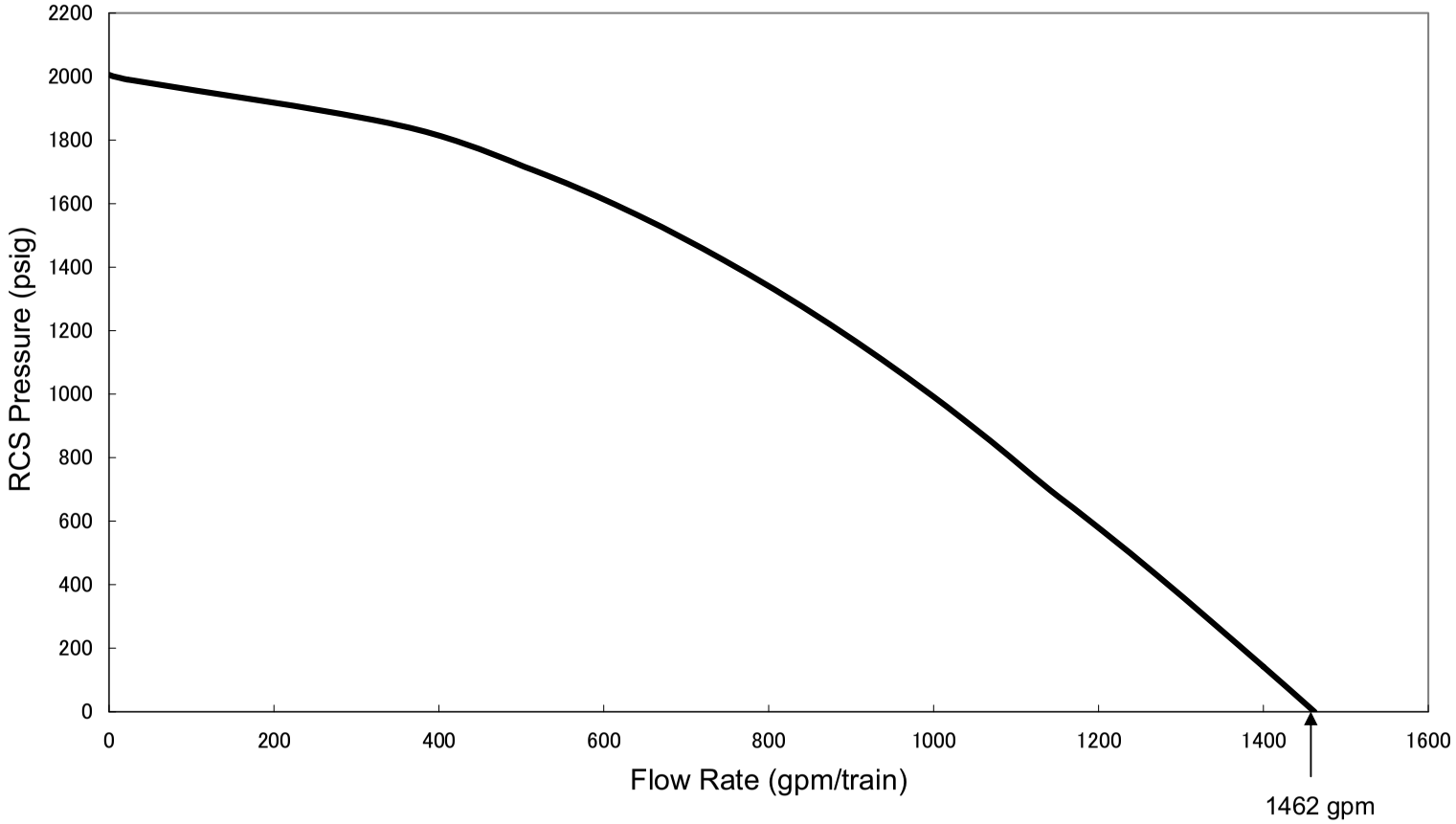

Figure 6.3-16 High Head Safety Injection Flow Characteristic Curve (Maximum Safeguards)

Following a DBA, the containment pressure approaches atmospheric pressure. When the containment pressure is reduced sufficiently and the operator determines that containment spray is no longer required, the operator terminates containment spray.

6.5.2.2 System Design (for Fission Product Removal)

The RWSP contains ~~81,230~~84,750 ft^3 of water borated to at least 4,000 ppm boron, resulting in a pH of approximately 4.3. Crystalline NaTB is stored in baskets at the operating level in containment. The chemical composition of NaTB is $Na_2B_4O_7 \cdot 10\ H_2O$. Section 6.1, "Engineered Safety Feature Materials," provides additional information on this chemical and its compatibility with ESF materials in addition to those of the CSS. MIC-03-06-00070

As described in Subsection 6.2.2, there are 348 containment spray nozzles arrayed in four spray rings positioned high in the containment. Figure 6.2.2-5 is a sectional view of the containment showing the elevation of each spray ring (A, B, C, and D). Figure 6.2.2-6 presents the number and types of nozzles on each spray ring. Figure 6.2.2-6 also presents a plan view showing the location of each nozzle on each spray ring and the predicted spray coverage on the operating floor of the containment. The nozzle design and manufacturer, orientation, supply pressure, and array on the headers are commonly used in US nuclear power applications.

Approximately 60% of the containment net free volume is sprayed. Unsprayed regions include those areas covered by the containment structure (i.e., pressurizer subcompartment top cover). Table 6.5-4 presents a tabulation of the unsprayed volume in the containment. Significant natural convection mixing flow between sprayed and unsprayed regions is established by the large difference between the sprayed and the unsprayed percentages of the containment volume. Figures 6.3-10 and 6.3-11 shows the plan and sectional views of the spray distribution, coverage patterns, and spray trajectories for the NaTB baskets.

Operation of the CSS to remove fission products from containment is described in Chapter 15, Subsection 15.6.5.5. The time of spray initiation and spray flow rate is also shown in Chapter 15, Subsection 15.6.5.5.

6.5.2.3 Design Evaluation

Chapter 15, Subsection 15.0.3 describes the iodine removal parameters for the US-APWR. Only two CSS trains are credited to mitigate the effects of a design basis accident that releases radioactive material into the containment. Chapter 15, Subsection 15.6.5.5 describes the radiological consequence evaluation for the limiting design basis accident, including fission product removal, by the CSS. Chapter 15, Subsection 15.0.3 contains information about the methods employed in this evaluation.

6.5.2.3.1 Elemental Iodine Removal by Spray

The iodine removal analysis assumes two 50% capacity containment spray trains are operating. The elemental iodine removal by spraying is negligible. Accordingly, no credit is taken for removal of elemental iodine by spray. No credit is taken for containment spray removal of noble gases or organic iodine.

Tire 2
Chapter 14

Table 14.3-1a Design Basis Accident Analysis Key Design Features (Sheet 2 of 8)

Tier 1 Ref.(1)	Key Design Features	Tier 2 Location(2)	
Table 2.2-4 ITAAC #3,#5 Table 2.11.1-1 Table 2.11.1-2 ITAAC #3	The containment design pressure is 68 psig. The PCCV is designed for an external pressure of 3.9 psig based on conservative analysis of inadvertent CSS operation. The containment design temperature is 300°F. Free volume of containment is 2,800,000 ft^3.	Table 3.8.1-1 6.2.1.5.3 Table 6.2.1-2 Table 6.5-5 15.4.8.4 15.6.5	
2.4.1 Table 2.4.1-2 ITAAC #4.b	Ferritic reactor coolant pressure boundary materials meet 10 CFR 50 Appendix G fracture toughness criteria and requirements for testing.	5.2.3.3 5.3.1	
2.4.2.1 Table 2.4.2-5 ITAAC #10.a	The pressurizer safety valves provide overpressure protection in accordance with the ASME Code Section III. This overpressure protection is provided for the followingbounding events • Loss of external electrical load. • Loss of normal feedwater flow. • Reactor coolant pump shaft break. • Uncontrolled rod cluster control assembly bank withdrawal from a subcritical or low-power startup condition. • Spectrum of rod ejection accidents. The sum of the capacities of the pressurizer safety valves exceeds 1.728×10^6 lb/hr (432,000 lb/hr per valve).	5.2.2.1 Table 5.2.2-1	
Table 2.4.2-5 ITAAC #10.a	Pressurizer safety valves set pressure; ≥2435 psig and ≤2485 psig	Table 5.2.2-1	
Table 2.4.2-5 ITAAC #10.d	The reactor coolant flow rate per loop with 10% steam generator tube plugging is at least 112,000 gallons per minute.	Table 5.1-3	
Table 2.4.2-5 ITAAC #10.c	RCPs have a rotating inertia to provide coastdown flow.	5.4.1 15.3.1.1 15.6.5.2	
Table 2.4.4-5 ITAAC #7.b	The four independent ECC/CS suction strainers are designed to maintain adequate NPSH and minimize downstream effects to support ECC/CS functions, maintaining the reactor core in a long-term coolable geometry and supporting decay heat removal following a design basis accident. Debris interceptors are installed to protect the recirculation pathways and strainer from blockage from large debris.	~~6.2.2.2~~ 6.2.2.2.6 and 6.2.2.3 Table 6.2.2-2 Table 19.1-119	MIC-03-14-0 0002 MIC-03-14-0 0003 MIC-03-14-0 0003
Table 2.4.4-5 ITAAC #1.a	The RWSP and ECC/CS suction strainers are located at the lower elevation in containment. The coolant and associated debris from a pipe or component rupture (LOCA), and the containment spray drain into the RWSP through ~~transfer pipes~~overflow piping in the reactor cavity and header compartment.	6.2.2.2.5 Table 19.1-119	MIC-03-14-0 0003

NOTES: (1) Source: Tier 1 section or table. (2) Tier 2 location or table where addressed.

Table 14.3-1a Design Basis Accident Analysis Key Design Features (Sheet 3 of 8)

Tier 1 Ref.(1)	Key Design Features	Tier 2 Location(2)
Table 2.4.4-5 ITAAC #7.b	Insulation and coatings inside containment are consistent with the design basis evaluations of ECC/CS suction strainer performance.	6.1.2 6.1.3 6.2.2.3 Table 19.1-119
2.4.4.1 Table 2.4.4-2 Table 2.4.4-5 ITAAC #1.a, #1.b, #6.b, #6.c, #10.b	The high head safety injection system consists of four independent and dedicated SI pump trains. The SI pump trains are automatically initiated by an ECCS actuation signal, and supply borated water from the RWSP to the reactor vessel via direct vessel injection line.	6.3.2.1 Table 19.1-119
Table 2.4.4-5 ITAAC #7.b	Each safety injection pump has a pump differential head of no less than 3937 ft and no more 4527 ft at the minimum flow, and injects no less than 1259 gpm and no more than 1462 gpm of RWSP water into the reactor vessel at atmospheric pressure.	Table 6.2.1-5 6.3 Figure 6.3-4 Figure 6.3-15 Figure 6.3-16
2.4.4.1 Table 2.4.4-5 ITAAC #7.b	Four (4) ECCS accumulators store borated water under pressure and automatically inject it into the RCS if the reactor coolant pressure decreases below the accumulator pressure. The volume of each accumulator is at least 3,180 ft^3, considering the total water volume and adding the volume of gas space and dead water volume.	Table 6.2.1-4 Table 6.2.1-5 6.3.2.2.2 Table 6.3-5
Table 2.4.4-5 ITAAC #7.b Table 2.4.4-6	The water volume injected from each accumulator into reactor vessel is ≥2126 ft^3. The water volume injected from each accumulator into reactor vessel during large flow is ≥1326.8 ft^3. The calculated resistance coefficient of the accumulator system (based on a cross-section area of 0.6827 ft^2) meets the requirements shown in Tier 1 Table 2.4.4-6. The accumulators provide the integrated function of low head injection in the event of a LOCA.	6.3 Table 6.3-5 Table 19.1-119
2.4.4.1 Table 2.4.4-5 ITAAC #7.b	The RWSP is the source of borated water for emergency core cooling and containment spray systems. The volume of the RWSP is at least ~~81,230~~84,750 ft^3, taking into account ineffective pit volume and containment cavities and pits where water may be trapped and not drain to the RWSP.	6.2.2.2.5 Table 6.2.1-3 Table 6.2.1-4 Figure 6.2.2-7 6.3 Table 6.3-5
2.4.5.1 Table 2.4.5-5 ITAAC #8.a	RHRS provides long term core cooling.	5.4.7.1 Table 19.1-119

NOTES: (1) Source: Tier 1 section or table. (2) Tier 2 location or table where addressed.

MIC-03-14-0 0003

Tire 2
Chapter 15

The US-APWR ECCS consists of the accumulator system, the high head injection system (HHIS) and emergency letdown system. The ECCS injects borated water into the RCS following a postulated LOCA to cool the reactor core, to prevent damage to the fuel cladding, and to limit the zirconium-water reaction of the fuel cladding to a very small amount.

Each of the four RCS loops has an accumulator connected to the respective cold leg. When the RCS pressure falls below the accumulator initiating pressure of 600 psia, the accumulators begin to inject borated water into the RCS cold legs. Each accumulator has an internal passive flow damper, which automatically switches the injection flowrate. When the water level is above the top of a standpipe within an accumulator, water enters the flow damper through both inlets at the top of the standpipe and at the side of the flow damper and thus the accumulator injects water with a large flowrate. When the water level drops below the top of the standpipe, the water enters the flow damper only through the side inlet and thus injects water at a lower flowrate. The accumulators are attached to the cold legs.

The HHIS consists of four independent safety trains, each containing an SI pump and the associated valves and piping. The SI pumps are aligned to take suction from the refueling water storage pit (RWSP) and deliver borated water directly to the downcomer through the direct vessel injection (DVI) nozzles located below the cold leg inlet nozzles on the RV. The RWSP is located within the lowest portion of the containment vessel and collect the water from the break and the containment sprays. The RWSP provides a continuous borated water source for the SI pumps avoiding the need to switch the pump suction from a storage water tank to the containment recirculation sump. The SI pumps start automatically upon receipt of the ECCS actuation signal.

The accumulators initially inject large flow rate, then automatically reduced to lower flow rate as the water level in the accumulators drop below the level of the internal standpipe. The reduced flow from the accumulators, together with the DVI flow from the SI pumps is sufficient to maintain the downcomer level provide flow to the core during the reflood phase. The combined performance of the accumulator system and the HHIS is sufficient to eliminate the need of low head injection pumps.

(4) Containment Spray System Functions During a LOCA

The containment spray system (CSS) consists of four independent trains, each containing a containment spray/residual heat removal (CS/RHR) heat exchanger, a CS/RHR pump, spray nozzles, piping and valves. The CSS takes borated water taken from the RWSP then sprays it into the containment vessel to maintain the pressure of the containment to be below the design pressure and restore it to approximately atmospheric pressure. The CSS is automatically actuated on the high-3 containment pressure signal. The CS/RHR heat exchangers provide long term cooling by removing heat from the containment to further reduce the pressure.

During a LOCA, the RWSP is well protected against debris wash down. Containment drains ~~(transfer pipes)~~ into the RWSP are protected from large debris by ~~vertical debris bars, capped by a ceiling plate~~debris interceptors. The suction strainers, and the CSS and SI suctions are located as such that they are protected from clogging. Detailed design descriptions are given in Section 6.2.2.2. MIC-03-15-00001

Table 15.6.5-3

US-APWR Major Plant Parameter Inputs Used in the Post-LOCA Long Term Cooling Analysis

Parameters	Values
System pressure	Atmospheric pressure (for large break LOCA)
	120 psia (*) (for small break LOCA)
Core Power	102% of rated power (4540 MWt)
Decay Heat	1971 ANS, infinite operation plus 20%
Boric Acid Source	
RWSP	
Boric Acid Concentration	Maximum (2.4 wt.%)
Volume	Maximum (~~89,000~~94,000 ft^3)
Water Density	Maximum (Density at 39°F)
Accumulator	
Boric Acid Concentration	Maximum (2.4 wt.%)
Volume	Maximum
Density	Maximum (Density at 39°F)
RCS	
Boric Acid Concentration	Maximum (1.3 wt.%)
Volume	Minimum
Density	Minimum (Density at T_{hot} + 4°F)
ECC Water Temperature	Saturation temperature at atmospheric pressure (Large Break LOCA)
	RWSP maximum temperature reached during a LOCA (Small Break LOCA)
Operator Actions	Credited (**)

MIC-03-15-00001

Notes:
(*) Corresponding to the boric acid congruent melting temperature of 339.8°F
(**) To perform the switchover from RV injection mode to the simultaneous RV and hot leg injection mode.

Tire 2
Chapter 16

SURVEILLANCE REQUIREMENTS

SURVEILLANCE		FREQUENCY
SR 3.5.4.1	----------NOTE---------- Only required to be performed when containment air temperature is < 32°F or >120°F. ---------- Verify RWSP borated water temperature is ≥ 32°F and ≤ 120°F.	[24 hours OR In accordance with the Surveillance Frequency Control Program]
SR 3.5.4.2	Verify RWSP borated water volume is ≥ ~~583,340~~79,920 ft^3 (597,800 gallons).	[7 days OR In accordance with the Surveillance Frequency Control Program]
SR 3.5.4.3	Verify RWSP boron concentration is ≥ 4000 ppm and ≤ 4200 ppm.	[7 days OR In accordance with the Surveillance Frequency Control Program]
SR 3.5.4.4	Verify isotopic concentration of B-10 in the RWSP is ≥ 19.9% (atom percent).	[24 hours OR In accordance with the Surveillance Frequency Control Program]

DCD_06.02.02-64
MIC-03-16-0009

BACKGROUND (continued)

reactor coolant in the RCS is mixed with the refueling water stored in the RWSP. With the repeated mixing of each cycle, the isotopic concentration of B-10 of the refueling water in the RWSP can gradually decrease over a long period of time. The depleted B-10 of the boric acid solution in the RWSP can be recovered by increasing the overall boron concentration or the B-10 isotopic concentration itself. The requirement to verify the B-10 isotopic concentration is only required if the boron recycle subsystem is used.

APPLICABLE SAFETY ANALYSES

During accident conditions, the RWSP provides a source of borated water to the SI and CS System pumps. As such, it provides containment cooling and depressurization, core cooling, and replacement inventory and is a source of negative reactivity for reactor shutdown (Refs. 1 and 2). The design basis transients and applicable safety analyses concerning each of these systems are discussed in the Applicable Safety Analyses section of B 3.5.2, "Safety Injection System (SIS) - Operating," B 3.5.3, " Safety Injection System (SIS) - Shutdown," and B 3.6.6, "Containment Spray Systems." These analyses are used to assess changes to the RWSP in order to evaluate their effects in relation to the acceptance limits in the analyses.

The RWSP must also meet volume, boron concentration, and temperature requirements for non-LOCA events. The volume is not an explicit assumption in non-LOCA events since the required volume is a small fraction of the available volume. The deliverable volume limit is set by the LOCA and containment analyses. For the RWSP, the deliverable volume is different from the total volume contained since, due to the design of the tank, more water can be contained than can be delivered. The minimum boron concentration of 4000 ppm is an explicit assumption in the main steam line break (MSLB) analysis to ensure the required shutdown capability. The safety analysis assumes that the boron has the isotopic concentration of B-10 found in natural boron (19.9 atom percent).

The maximum temperature is an assumption in the steam generator tube rupture analysis; the minimum is an assumption in the MSLB.

For a large break LOCA analysis, the ~~minimum water volume limit of 329,150 gallons~~minimum recirculation water volume limit of 43,000 ft^3 (321,700 gallons) and the lower boron concentration limit of 4000 ppm (at the natural B-10 isotopic concentration) are used to compute the post LOCA boron concentration necessary to assure subcriticality. To secure this minimum water volume in the accident, RWSP needs to store boric acid water ≥ ~~583,340 gallons~~79,920 ft^3 (597,800 gallons) during normal operation. This water volume also bounds the ECCS and CSS pump NPSH Requirements. The large break LOCA is the limiting case since the safety analysis assumes that all control rods are out of the core.

MIC-03-16-0 0009

MIC-03-16-0 0009

Tire 2
Chapter 19

The key assumptions for LPSD are summarized below;

Key assumptions for IE of LPSD

a. Loss of the SFP cooling function and boric acid dilution events are excluded from initiating events of LPSD since these events are not risk significant.

b. During shutdown, a LOCA caused by pipe rupture is unlikely to occur because the reactor coolant system is at low or atmospheric pressure. Only LOCA events that occur by operator error are considered in LPSD PRA.

Key assumptions for system models of LPSD

a. In the case of loss of CCW/essential service water, operator will perform alternate charging pump cooling in order to maintain RCS injection by establishing the injection flow path from FSS tank to charging pump and from charging pump to the FSS tank, and starting the FSS pump.

b. In case a LOCA occurs in the RHR line, operator will perform the isolation of the RHR hot legs suction isolation valves.

c. In case the RCS water level decreases during mid-loop operation and the failure of automatic low-pressure letdown isolation valve occurs, operator will perform the manual isolation of low-pressure letdown line.

d. When the RCS is at atmospheric pressure, gravity injection from SFP is effective. Operator will perform the gravity injection by opening the injection flow path from SFP to RCS cold legs, and supplying water from RWSP to SFP. The validity of this function is determined from ~~previous PRA studies~~a system analysis and calculations determining the loss of RCS inventory due to boiling as a function of time and the minimum gravity injection flowrate at atmospheric pressure. DCD_19-547

e. When the RCS is mid-loop operation with the closed state, it is assumed that the reflux cooling with the SGs is effective. The validity of this function is determined from ~~the previous PRA studies~~calculating peak RCS temperatures and pressures during various mid-loop POS scenarios as a function of time with consideration of the time required for successful operator mitigative actions. DCD_19-547

f. The success criteria of mitigation functions for LPSD PRA are established based on the engineering judgment, taking into account the similar success criteria of level 1 PRA at power, the decay heat, plant configuration and so on.

g. ~~Various equipments will be possible temporary in the containment during LPSD operation for maintenance. However, there are few possibilities that these materials fall into the sump because the debris interceptor is installed on the sump of US-APWR. (see Chapter 6, Subsection 6.2.2)~~Various temporary equipment will be possible in the containment during LPSD operation for maintenance. However, it is unlikely that these materials reach the RWSP because debris interceptors are installed over the SG compartment floor openings and within the header MIC-03-19-00007

compartment (see Chapter 6, Subsection 6.2.2). Therefore, potential plugging of the suction strainers due to debris is excluded from the PRA modeling. MIC-03-19-00007

h. During plant shutdown, the operability of I&C systems used for mitigation functions such as RHR, charging injection, RWSAT replenishment by refueling water recirculation pump are frequently checked through maintenance activities and evolution of plant operating states. Local I&C equipments of these components as well as the safety logic system can be checked and the I&C hardware are considered to be reliable during plant shutdown. Local I&C equipments of the safety injection pumps, which is a mitigation function during plant shutdown, may not be operated or tested during plant shutdown. However, the DAS can be used to initiated safety injection when the I&C systems have failed, and therefore, signals to actuate safety injection pumps are also reliable. Manual operation of the safety injection pumps through the DAS is available during plant shutdown.

i. Restoration of I&C equipments can be performed within a short period of time by exchanging the faulted card.

j. One of the characteristic designs of the US-APWR is installation and removal of the in-core instrumentation system (ICIS) from the top of the RV head. Operators can start to remove (before refueling) and install (after refueling) the ICIS after the end of RCS draining as shown in Figure 19.1-23. This action cannot be done during RCS draining, which results in an extended duration of mid-loop operation. During actual plant operation, the action to install or remove the ICIS is performed when the RCS water level is above the top of main coolant piping (MCP). In addition, high SG installation level of the US-APWR design enables to keep water level higher than the top of MCP during installation or ~~removal SG nozzle dams, SG maintenance and hydrogen peroxide operation~~removal of SG nozzle dams and SG maintenance. The LPSD PRA conservatively assumes that the actions are done with water level at the center of MCP. This assumption is used in the estimation of allowable time to core uncovery after a loss of RHR. DCD_19.01-10 S01

The release categories for the low power and shutdown conditions are defined on the basis of plant operational states (POSs). Frequency and source terms for each release category are quantified and the significant large release sequences are evaluated. The results of source term analysis are used for the inputs of offsite dose evaluation.

Release category for the low power and shutdown (LPSD) conditions is classified into two groups as below.

- Filled RCS state
- Mid-loop Operation State

Among the POSs for LPSD conditions considered in the US-APWR PRA, only POS3, POS4, POS8, POS9, and POS11 are considered for the release categories and source term evaluation to represent whether containment is open or not. In POS3, POS9, and POS11, which are categorized as the filled RCS state, the equipment hatch is expected

Table 19.1-119 Key Insights and Assumptions (Sheet 6 of 48)

Key Insights and Assumptions	Dispositions
5. Refueling Water Storage Pit	
- The RWSP is located on the lowest floor inside the containment. The coolant and associated debris from a pipe or component rupture (LOCA), and the containment spray drain into the RWSP through ~~transfer~~overflow pipes.	6.3.2.2.4 6.2.2.2.5
- Four independent sets of ECC/CS strainers are located in the RWSP as part of the ECCS and CSS. The strainer design includes redundancy, a large surface area to account for potential debris blockage and maintain safety performance, corrosion resistance, and a strainer hole size to minimize downstream effects.	6.3.2.2.4 6.2.2.2.6
- The RWSP is the protected, reliable, and safety-related source of boric acid water for the containment spray and safety injection.	6.2.2.2.5
- The RWSP is designed to with sufficient capacity to meet long-term post-LOCA coolant needs, including holdup volume losses.	6.2.2.2.5
- The RWSP also is used to fill the refueling cavity in support of refueling operations.	6.2.2.2.5

MIC-03-19-00007

Table 19.1-119 Key Insights and Assumptions (Sheet 31 of 48)

Key Insights and Assumptions	Dispositions	
LPSD assumptions		
1. Freeze plug may not be used for US-APWR because the isolation valves are installed considering maintenance and CCWS has been separated individual trains. Therefore, the freeze plug failure is excluded from the potential initiator.	COL 13.5(7)	
2. ~~Hydrogen peroxide addition is adopted instead of aeration because it decreases the duration of the mid-loop operation: hydrogen peroxide addition operation does not require mid-loop duration. As a result of adopting hydrogen peroxide addition which is done at a higher SG nozzle level, the mid-loop operation is needed only to drain the SG primary side water while, thus reducing overall duration mid-loop operation.~~	~~5.4.7.2.3.6~~	DCD_19.01-10 S01
3. Redundant narrow range water level instrument and a mid-range water level instrument are provided to measure mid-loop water level. Installation of a redundant water narrow level instrument enhances reliability of the mid-loop operation. A temporary mid-loop water level sensor that measures the RCS water level with reference to pressure at the reactor vessel head vent line and cross over leg is installed in addition to these permanent water level sensors to cope with surge line flooding events.	5.4.7.2.3.6 Figure 5.1-2	
4. When the RCS is mid-loop operation with the closed state, the reflux cooling with the SGs is effective.	19.1.6 19.2.5 COL 19.3(6) COL 13.5(6)	
5. ~~Various equipments will be possible temporary in the containment during LPSD operation for maintenance. However, there are few possibilities that these materials fall into the sump because the debris interceptor is installed on the sump of US-APWR.~~Various temporary equipment will be possible in the containment during LPSD operation for maintenance. However, it is unlikely that these materials reach the RWSP because debris interceptors are installed over the SG compartment floor openings and within the header compartment (see Chapter 6, Subsection 6.2.2). Therefore, potential plugging of the suction strainers due to debris is excluded from the PRA modeling.	6.2.2	MIC-03-19-00007