Progress Energy

Crystal River Nuclear Plant
Docket No. 50-302
Operating License No. DPR-72

August 21, 2012
3F0812-03

U.S. Nuclear Regulatory Commission
Attn: Document Control Desk
Washington, DC 20555-0001

Subject: Crystal River Unit 3 – Response to Request for Additional Information to Support NRC Safety Issues Resolution Branch (SSIB) Technical Review of the CR-3 Extended Power Uprate LAR (TAC No. ME6527)

References:

1. CR-3 to NRC letter dated June 15, 2011, "Crystal River Unit 3 – License Amendment Request #309, Revision 0, Extended Power Uprate" (ADAMS Accession No. ML112070659)
2. Email from S. Lingam (NRC) to D. Westcott (CR-3) dated June 29, 2012, "Crystal River, Unit 3 EPU LAR - Draft RAI from GSI-191 (GL 2004-02) Branch (TAC No. ME6527)"
3. NRC to CR-3 letter dated July 17, 2012, "Crystal River Unit 3 Nuclear Generating Plant – Request For Additional Information For Extended Power Uprate License Amendment Request (TAC No. ME6527)" (ADAMS Accession No. ML12194A417)

Dear Sir:

By letter dated June 15, 2011, Florida Power Corporation (FPC) requested a license amendment to increase the rated thermal power level of Crystal River Unit 3 (CR-3) from 2609 megawatts (MWt) to 3014 MWt (Reference 1). On June 29, 2012, via electronic mail, the NRC provided a draft request for additional information (RAI) related to NRC Generic Safety Issue 191, "Assessment of Debris Accumulation on Pressurized-Water Reactor Sump Performance," needed to support the SSIB technical review of the CR-3 Extended Power Uprate (EPU) License Amendment Request (LAR) (Reference 2). By teleconference on July 10, 2012, FPC discussed the draft RAI with the NRC to confirm an understanding of the information being requested. On July 17, 2012, the NRC provided a formal RAI required to complete its evaluation of the CR-3 EPU LAR (Reference 3).

The attachment, "Response to Request for Additional Information – Safety Issues Resolution Branch Technical Review of the CR-3 EPU LAR," provides the CR-3 formal response to the RAI.

This correspondence contains no new regulatory commitments.

If you have any questions regarding this submittal, please contact Mr. Dan Westcott, Superintendent, Licensing and Regulatory Programs at (352) 563-4796.

Sincerely,

Jon A. Franke
Vice President
Crystal River Nuclear Plant

JAF/gwe

Attachment: Response to Request for Additional Information – Safety Issues Resolution Branch Technical Review of the CR-3 EPU LAR

xc: NRR Project Manager
Regional Administrator, Region II
Senior Resident Inspector
State Contact

Crystal River Nuclear Plant
15760 W. Powerline Street
Crystal River, FL 34428

A001
NRR

STATE OF FLORIDA

COUNTY OF CITRUS

Jon A. Franke states that he is the Vice President, Crystal River Nuclear Plant for Florida Power Corporation; that he is authorized on the part of said company to sign and file with the Nuclear Regulatory Commission the information attached hereto; and that all such statements made and matters set forth therein are true and correct to the best of his knowledge, information, and belief.

Jon A. Franke
Vice President
Crystal River Nuclear Plant

The foregoing document was acknowledged before me this 21 day of August, 2012, by Jon A. Franke.

Signature of Notary Public
State of Florida

CAROLYN E. PORTMANN
Commission # DD 937553
Expires March 1, 2014
Bonded Thru Troy Fain Insurance 800-385-7019

(Print, type, or stamp Commissioned
Name of Notary Public)

Personally Known ✓ -OR- Produced Identification _____

FLORIDA POWER CORPORATION

CRYSTAL RIVER UNIT 3

DOCKET NUMBER 50-302 / LICENSE NUMBER DPR-72

ATTACHMENT

RESPONSE TO REQUEST FOR ADDITIONAL INFORMATION – SAFETY ISSUES RESOLUTION BRANCH TECHNICAL REVIEW OF THE CR-3 EPU LAR

RESPONSE TO REQUEST FOR ADDITIONAL INFORMATION – SAFETY ISSUES RESOLUTION BRANCH TECHNICAL REVIEW OF THE CR-3 EPU LAR

By letter dated June 15, 2011, Florida Power Corporation (FPC) requested a license amendment to increase the rated thermal power level of Crystal River Unit 3 (CR-3) from 2609 megawatts (MWt) to 3014 MWt (Reference 1). On June 29, 2012, via electronic mail, the NRC provided a draft request for additional information (RAI) related to NRC Generic Safety Issue 191, "Assessment of Debris Accumulation on Pressurized-Water Reactor Sump Performance," needed to support the Safety Issues Resolution Branch (SSIB) technical review of the CR-3 Extended Power Uprate (EPU) License Amendment Request (LAR). By teleconference on July 10, 2012, FPC discussed the draft RAI with the NRC to confirm an understanding of the information being requested. The following provides the CR-3 formal response to the RAI needed to support the SSIB technical review of the CR-3 EPU LAR. For tracking purposes, each item related to this RAI is uniquely identified as SSIB X-Y, with X indicating the RAI set and Y indicating the sequential item number.

SSIB RAIs

SSIB 1-1

With regard to resolving issues identified in the NRC Generic Safety Issue 191, "Assessment of Debris Accumulation on Pressurized-Water Reactor Sump Performance," Attachment 5 of the original EPU LAR dated June 15, 2011, Section 2.8.5.6.3 cites NRC correspondence dated October 2, 2009 (Farideh E. Saba (NRC) Letter to Jon A. Franke (Progress Energy)), Crystal River Unit 3 Nuclear Generating Plant - Partial Close out and Request for Additional Information Related to Generic Letter 2004-02 (TAC NO. MC4678), ADAMS Accession No. ML092670261) to show that with the exception of in-vessel downstream effects, CR-3 has resolved the issues identified in Generic Safety Issue-191.

Consistent with the guidance in the NRC staff's safety evaluation on Nuclear Energy Institute [NEI]-04-07, the equipment in the emergency core cooling system (ECCS) and containment spray system, such as pumps and valves, at CR-3 has been evaluated for the effects of debris in the recirculated fluid that bypasses (or passes through) the suction strainers. The power uprate submittal states that valves and piping are being added to the ECCS to support a passive cross-tie between the decay heat removal/low-pressure injection system and reactor cooling system hot-leg B. Please describe the method(s) used to evaluate the new piping system components for blockage and wear and the results of those evaluations.

Response:

The new valves for the Low Pressure Injection (LPI) System cross-tie and the hot leg injection (HLI) modification have been assessed for blockage and erosive wear against the wear and plugging criteria of NRC approved topical report WCAP-16406-P-A, "Evaluation of Downstream Sump Debris Effects in Support of GSI-191," (Reference 2). Figure 1, "Proposed Low Pressure Injection System Cross-Tie and Hot Leg Injection Simplified Diagram," illustrates the new valves and instrument sensing lines proposed for installation in the CR-3 LPI System cross-tie and HLI modification.

The new LPI cross-tie modification design includes the following:

- Two Flex Wedge normally open, 10 inch gate valves (DHV-501, 601). The valves provide a full port flow path through the cross-tie line. Plugging and wear impact are not considered critical per Section 8.2, "Valves," of WCAP-16406-P-A.

- Two Y-pattern manual 10 inch globe valves (DHV-500, 600). These manual valves will be locked in a throttled position following flow balancing of the system. It is expected that these valves will be throttled approximately 50% open to establish at least 3000 gpm. FPC has assessed the plugging and wear impact of these valves and concluded that adequate margin exists to account for fine tuning of the valve throttle position during flow balancing. These valves will meet the plugging and wear acceptance criteria of Sections 7.3.3, "Flow Area Evaluation for Plugging and Wear," and 7.3.2, "Erosive Wear," of WCAP-16406-P-A, respectively.

- Two Y-pattern globe style, 10 inch stop check valves (DHV-510, 610). These valves will change position based on pump discharge flow and prevent reverse flow through an idle pump, if necessary. Since these check valves are > 1 inch, and the minimum required flow through the valves is normal LPI System flow (i.e., > 0.42 ft/sec), plugging and wear impact are not considered critical per Section 8.2 of WCAP-16406-P-A.

The new HLI line modification design includes the following:

- Two normally closed motor-operated, parallel slide, 6 inch gate valves (DHV-514, 614). The valves are required to open in certain post-accident scenarios to support boron precipitation mitigation in the core. These gate valves are > 1 inch and are either fully open or fully closed; thus, plugging and wear impact are not considered critical per Section 8.2 of WCAP-16406-P-A.

- One manual normally open, 6 inch Flex Wedge gate valve (DHV-615) provides a full port flow path through the new HLI line. This gate valve is > 1 inch and is normally fully open; thus, plugging and wear impact are not considered critical per Section 8.2 of WCAP-16406-P-A.

- Two normally closed, 6 inch, nozzle check valves (DHV-611, 612) will open to pass process flow in certain post-accident scenarios to support boron precipitation mitigation in the core. Since these check valves are > 1 inch, and the minimum required flow through the valves is 400 gpm (i.e., > 0.42 ft/sec), plugging and wear impact are not considered critical per Section 8.2 of WCAP-16406-P-A.

- Two normally closed, 8 inch, T-pattern, manual globe valves (DHV-9, 48) in the process lines to the spent fuel pool and the borated water storage tank. These normally closed test valves are > 1.5 inches; thus, plugging and wear impact are not considered critical per Section 8.2 of WCAP-16406-P-A.

- The new LPI System pressure instruments (DH-64-DPT, DH-65-DPT, DH-66-PT, and DH-67-PT) utilize 0.5 inch, stainless steel tubing for impulse sensing lines to connect to the LPI System piping downstream of throttle valves DHV-500 and DHV-600. Since the impulse sensing instrument lines are static fluid lines and have no discernible flow, the only credible

method causing the instrument sensing lines to become plugged would be caused by settling debris in the lines. Therefore, the LPI System cross-tie line modification design includes connecting the 0.5 inch sensing line perpendicular to the main 10 inch LPI System piping at the pipe horizontal center-line, which will ensure the sensing lines remain water-solid minimizing the possibility of debris entrapment and settling in the sensing lines. Thus, the LPI System pressure impulse sensing line design meets the criteria specified in Section 8.6.6, "Sensing Line Evaluation," of WCAP-16406-P-A.

References

1. FPC to NRC letter dated June 15, 2011, "Crystal River Unit 3 – License Amendment Request #309, Revision 0, Extended Power Uprate." (ADAMS Accession No. ML112070659)

2. Westinghouse Topical Report WCAP-16406-P-A, "Evaluation of Downstream Sump Debris Effects in Support of GSI-191," Revision 1, March 2008. (Proprietary)

FLORIDA POWER CORPORATION

CRYSTAL RIVER UNIT 3

DOCKET NUMBER 50-302 / LICENSE NUMBER DPR-72

FIGURE 1

PROPOSED LOW PRESSURE INJECTION SYSTEM CROSS-TIE AND HOT LEG INJECTION SIMPLIFIED DIAGRAM

Figure 1
Proposed Low Pressure Injection System Cross-Tie and Hot Leg Injection Simplified Diagram

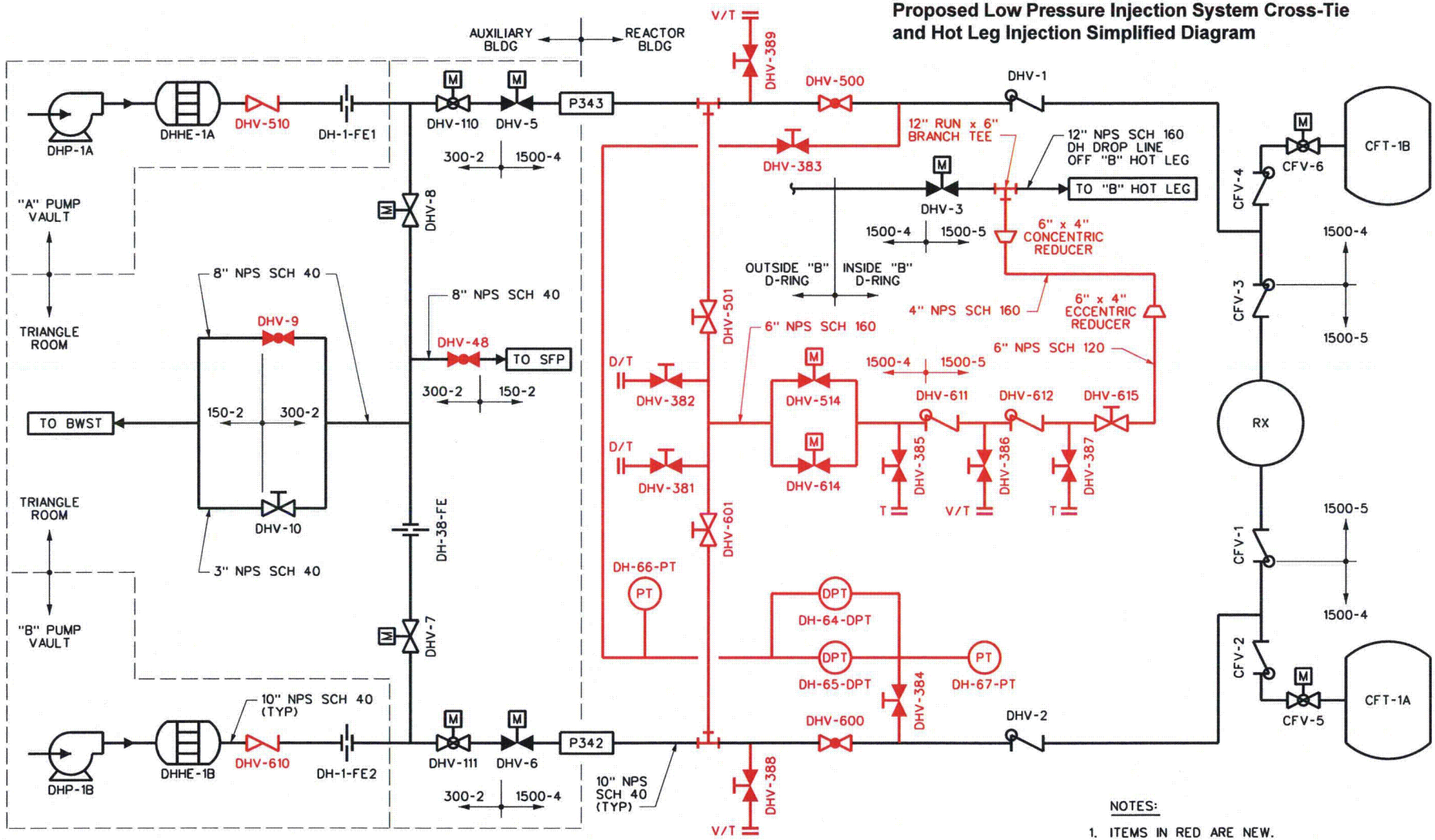

NOTES:

1. ITEMS IN RED ARE NEW.
2. ITEMS IN BLACK ARE EXISTING.
3. INSTRUMENT VALVES NOT SHOWN FOR CLARITY.