1. 002K6.06 001/FNP BANK/FNP-NO NRC/MEM 2.5/2.8/002K6.06/N/2//

Unit 1 is operating at 100% power.

Which one of the following completes the statements below describing the designed configuration of the high-pressure and low-pressure taps on the RCS loop flow instruments?

The design of the instrument taps ensures that the consequence of a rupture (guillotine-type shear) of a single:

- **LOW**-pressure tap _(1)_ cause a RCS LOOP LOW FLOW Rx Trip.
- **HIGH**-pressure tap _(2)_ cause a RCS LOOP LOW FLOW Rx Trip.

	(1)	(2)
A.	WILL	will NOT
B.	will NOT	will NOT
C.	WILL	WILL
D.	will NOT	WILL

Design of the RCS ELBOW FLOW TRANSMITTERS, 3 LP taps vs 1 HP tap.
The purpose of this design is such that a failure of one of these inputs results in a conservative input to RPS, while also minimizing the penetrations of the RCS.

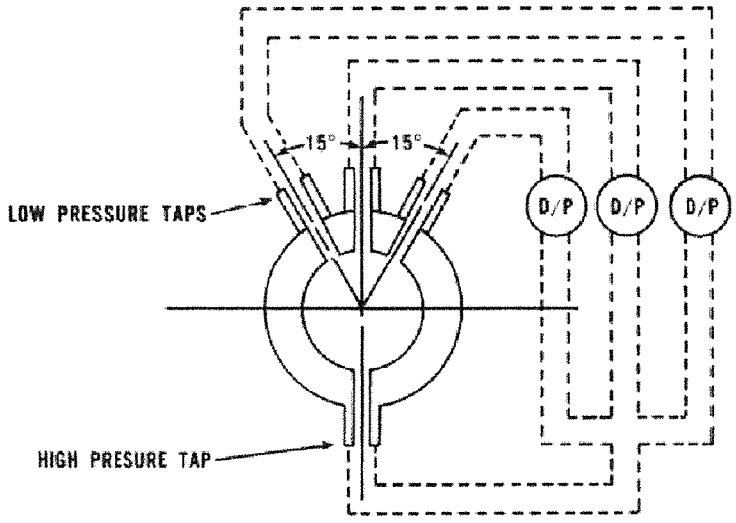

CROSS-SECTION

Loss of the HIGH pressure supply to FT-424 will also impact the HP supply to ALL Flow transmitters. This will result in ALL failing LOW. This inputs to the RPS LOW FLOW trip setpoint.
The RPS low flow trip setpoint is < 90% as indicated on 2/3 detectors on EITHER:

- 1 LOOP if > 30% power (P-8), OR
- 2 LOOPs if > 10% power (P-7).

Finally, the instrument feed are equipped with a flow restricting orifice to ensure that this instrument line rupture is restricted to within the Makeup capacity of the Chg system (3/8" flow restrictors are installed on all instrument supply lines which are 3/4")

A. Incorrect 1) a failure of a LP tap will affect only one FT; causing it to fail HIGH. There is NO HIGH flow Rx Trip signal.

Plausible: this would be selected if one incorrectly assessed the impact of the failure (HIGH vs LOW) and the coincidence, for the trip signal

2) a failure of a HP tap will affect all three FTs on that LOOP and satisfy the 2/3 coincidence for ONE loop, This is a RCP LOW FLOW TRIP signal.

Plausible: this would be selected if one were to incorrectly assess the impact of the failure (HIGH vs LOW) and the coincidence, for the trip signal OR reversed the configuration of the the HIGH pressure/Low pressure taps.

B. Incorrect 1) See above; A failure on the LP tap will result in a HIGH FLOW indication and therefore NEVER input to the LOW FLOW TRIP signal.

2) See A.2
Plausible: IF one were to properly assess failure direction of the LP detector malfunction but incorrectly recall that the HP taps are configured differently than the LP taps.

C. Incorrect 1) See A.1.

2) See D.2

Plausible: if the configuration were properly recalled but incorrectly assessed the impact of the LP tap malfunction OR the coincidence of the LOW FLOW Rx Trip. This would be selected.

D. Correct 1) See above; a rupture on a single LP tap will only result in ONE of three transmitters failing HIGH. This will NOT result in a reactor trip under any circumstance.

2) A rupture on the HIGH pressure line would result in all three detectors sensing a degraded flow; the 2/3 coincidence from that loop would be satisfied and a signal generated; a RX trip will OCCUR IF > 30% power (P-8), but NOT if < 10% (P-7).

K/A: **002K6.06 RCS— Knowledge of the effect** of a loss or **malfunction** on the following RCS components: Sensors and **Detectors**

Importance Rating:	2.5 2.8
Technical Reference:	FNP-1-EEP-0.0,v43.0 D175037 sheet1, v31 AOP-1.0,v20
References provided:	NONE
Learning Objective:	SELECT AND ASSESS the Reactor Coolant System (RCS) instrument/equipment response expected when performing Coolant evolutions including the fail condition, alarms, trip setpoints for each of the following (OPS-52101A03): [...] RCS Loop Flow [...]
Question History:	FNP bank (RCS-40301A02 005); formatted to 2+2, changed ONE distractor - DOES NOT QUALIFY for "Significantly modified"; improves plausibility of D and A.
K/A match:	RCS malfunction = leakage; EFFECT on Sensor/Detector = RCS LOOP flow transmitters failure (LOW vs HIGH) AND the coincidence for the LOW FLOW RX trip when P-7< RX POWER < P-8.
SRO justification:	N/A

1. RCS-40301A02 005/HLT//C/A (LEVEL 2/3) SYS/002K6.06////
Which one of the following is a consequence for the configuration of the high-pressure and low-pressure taps on the RCS loop flow instruments?

A. The rupture of a single low-pressure tap will cause a loop low RCS flow trip signal.
LP will; implies HP won't

B. The rupture of a single high-pressure or low-pressure tap will neither cause nor prevent a loop low RCS flow trip signal. LP will NOT; HP will NOT

C. The rupture of a single-high pressure tap will cause a loop low RCS flow trip signal.
HP will ; implies LP won't

D. The rupture of at least two high-pressure or two low-pressure taps is required to cause a loop low RCS flow trip signal. 2 malfunction HP or 2 LP WILL
OR Single LP will not and single HP will not

FNP Bank, MODIFIED format to 2+2.
content remains unchanged.
Does NOT qualify for Major changed.. ONLY 1 distractor changed.
Change in format to 2+2 only changes distracter D content.

1. 012 K6.06 001/MODIFIED/FNP BANK/MEM (SYS)//RO///

Given the following conditions:

- The Unit was operating at 68% power.
- An automatic reactor trip occurred.
- The cause of the trip was low flow in RCS Loop A.
- The cause of the trip was determined to be an instrument failure.

Which ONE (1) of the following input failures caused the reactor trip?

A. Two 'A' loop DP cell outputs failed high.

B. A single 'A' loop DP cell output failed high.

C. One 'A' loop low pressure side flow input failed low.

D. The 'A' loop high pressure side flow input failed low.

BANK: VC Summer 2009 Audit exam.

2. 003AA1.07 002/MOD/FNP-NO NRC/C/A 3.8/3.8/APE003AA1.07/N/3/HBF/GTO/

Unit 1 was operating at 59% power when Rod K4, a Shutdown Bank B rod, is dropped. The following conditions exist:

- Rod K4 is located at the periphery (outer edge) of the core closest to N-41.
- Rods were in manual control at the onset of the event.
- NO automatic Reactor trip occurs.

Which one of the following completes the statement below regarding the Excore Nuclear Instrumentation indications?

_(1)_ is **MOST affected** by the dropped rod.

The **AVERAGE** of ALL PR Nuclear Instruments (NI-41, N-42, N-43, and N-44) will provide an indication of Reactor Power which is _(2)_ ACTUAL Rx Power if allowed to stabilize as a result of the RCS temp change.

	(1)	(2)
A.	QUADRANT POWER TILT RATIO (QPTR)	LESS THAN
B.	QUADRANT POWER TILT RATIO (QPTR)	GREATER THAN
C.	AXIAL FLUX DIFFERENCE (AFD)	LESS THAN
D.	AXIAL FLUX DIFFERENCE (AFD)	GREATER THAN

AFD is a measure of the AVG of the comparisons between UPPER and LOWER detectors for each drawer. A dropped rod itself will impact the both the UPPER and LOWER portion of the core uniformly; AFD will be impacted due to the temperature/reactivity response to the dropped rod but NOT as significantly as QPTR will be affected.

QPTR is the ratio of the maximum upper/lower excore detector calibrated output to the average of the upper excore detector calibrated outputs. The dropped rod will result in the average power in the **affected quadrant to decrease and subsequently cause the average power in the unaffected quadrants to increase**. Thus the maximum upper and lower values will increase thereby **imposing a greater impact on QPTR.**

From UOP-3.1, P&L 3.1.9.5 state, "The NIs are the most accurate for the RCS temperature at which they were last calibrated. Primary or secondary transients that **cause Tcold to change can cause erroneous Rx Power indications.** When Tcold **decreases providing more downcomer shielding to the NIs, then NI indicated Rx Power will be non-conservative and lower than actual power."**

Finally, the IMPULSE loop will drive steam flow to Pre-event conditions, therefore reactor power will also return to pre-event values; There will be a "FLUX TILT"; **HOWEVER the AVG INDICATED NI power will remain representative of REAL**

reactor power when averaged together because **RCS temp will be lower than the programmed temp for that power level. This lower temp affects the** INDICATION of All NIs.

Distractor Analysis:

A. Correct 1) See above, the quadrant of the dropped rod will show a suppressed neutron flux; the other regions of the core will compensate by showing a higher neutron flux. AFD will be less affected in each region, in Quadrant 4 (NI-41/K4 rod) AFD will actually rise due to suppressed neutron flux and move to a region of the core were fuel concentration is likely higher (top), the other Quadrant's AFD lowers due to colder Tavg . **Therefore QPTR will be affected MOST**.

2) See above. The dropped rod = RCS temperature ↓. This causes SG pressure to fall, which in turn results in impulse pressure falling. DEH will respond by opening the GVs. ΔT ↑ as Steam demand ↑; from UOP-3.1, P&L 3.1.9.5, "Tavg changes affect NI indicated power, but NOT ΔT indicated power [...]". **ΔT will be indicative of ACTUAL reactor power by shielding/reflecting**--less neutrons leak to reach excore instruments, ACTUAL > INDICATED.

B. Incorrect 1) See A.1
2) See above; Rx power follows steam demand-- steam demand is relatively constant and regardless of the status of the IMPULSE feedback LOOP TCOLD temperatures will be lower, this will then affect the ability of the EXCORE NIs to accurately measure ACTUAL reactor power.

Plausible: Selected if one correctly assessed impact on QPTR but incorrectly assessed impact on excore instrumentation accuracy.

C. Incorrect 1) See A.1
2) See A.2

Plausible: This would be correct if an **entire bank were dropped a part of the way into the core.**

D. Incorrect 1) See above, the individual Quadrant AFD (rise) is affected by the ROD, and the AVG AFD (lower) is affected due to lower Tcold .

2) See B.2

Plausible: D.1 would be correct **if an entire bank were dropped a portion of the way into the core,**
D.2 is the result of mis-understanding the reactivity affects and/or the impact of the colder Cold leg temperature on EXCORE Operation.

K/A: 003AA1.07 — Dropped Control Rod— **Ability to operate and/or monitor the In-core and ex-core instrumentation.**

Importance Rating:	3.8 3.8
Technical Reference:	FNP-1-UOP-3.1, v111.1 FNP-1-UOP-1.2, v102.0
References provided:	None
Learning Objective:	**DEFINE AND EVALUATE** the operational implications of abnormal plant or equipment conditions associated with the operation of the Excore Nuclear Instrumentation System components and equipment to include the following (OPS-52201D07):Abnormal and Emergency Control Methods
Question History:	MODIFIED FNP Bank (CONTROL ROD-31301E07 001);
K/A match:	KA match is specifically identified with EXCORE NI monitoring. The dropped rod will impact AFD, QPTR and NI indicated power level, this question challenges the examinees understanding of how the dropped rod is expected to impact all these indications by comparison to one another and a reliable indication of power. ***Incore detectors*** are not normally operated by FNP OPERATIONS personnel, and are not part of the NORMAL drop rod response, ***therefore this aspect of the KA was not addressed.*** NOTE to examiner: **it is recognized that this question borders on Fundamental knowledge.** However, NUREG 1021 Appendix B C.1.d states: "Although test questions should be written to reflect the level of knowledge that is most appropriate for a specific K/A, it is best to avoid ***high percentages of fundamental knowledge-level questions*** [...]" **.** Therefore due to the relevance of the concept on Reactivity management and the relationship with plant procedures, AND **the KA itself**, as well as a review the remainder of the exam, the facility author believes that there is a relatively LOW percentage of fundamental knowledge questions on this exam; therefore this is acceptable.
SRO justification:	*N/A*

2. CONTROL ROD-31301E07 001/HLT///192005K1.16//YES//P2857

A nuclear reactor is operating at steady state full power with all control rods fully withdrawn when one control rod at the core periphery falls completely into the core. Assuming no reactor trip and no operator action, which one of the following will have changed significantly as a result of the dropped rod?

A. Axial power distribution only

B. Axial power distribution and shutdown margin

C. Radial power distribution only

D. Radial power distribution and shutdown margin

modified to fit KA to address Excore impact.

3. 003G2.1.23 003/MOD/FNP-NO NRC/C/A 4.3/4.4/003G2.1.23/N/2/HBF/GTO/

Unit 1 is at 50% power with the following conditions:

- B Train is the ON-SERVICE Train.
- A total loss of **B Train Service Water** has occurred.
- AOP-10.0, Loss of Service Water, is in progress.
- RCP bearing temperatures are beginning to ↑.

Which one of the following completes the statements below per AOP-10.0?

RCP **STATOR Winding** temperatures _(1)_ rise;

The **MINIMUM** RCP(s) **MOTOR Bearing** Temperatures which require a RX Trip is _(2)_ .

	(1)	(2)
A.	WILL	225°F
B✓	WILL	195°F
C.	will NOT	225°F
D.	will NOT	195°F

BECAUSE the B Train is the "ON-SERVICE Train" the B train CCW system is supplying the MISC Header; therefore this is the train providing cooling water for the RCP motor bearings and Thermal Barrier.

- A loss of Motor bearing cooling requires a trip of the RCP if BEARING temperatures **exceed 195°F.**
- *Whereas a loss of RCP seal cooling requires a trip if SEAL outlet temperatures exceed **225°F.** NOTE: shutdown seal activates at 250°F (AOP-4.1 Note-1)*

Regardless of which train is "ON-SERVICE" the B train of SW is cooling the RCP motor Air coolers (FSD A181001 Fig 10) . These are supplied **ONLY by B train SW.** Since there is NO IMMEDIATE (<3 min) trip criteria that should be encountered for this malfunction, the continued operation of the RCPs coupled with the loss of RCP MOTOR AIR COOLER cooling flow, the RCP cubicle temperatures will continue to rise. This space temperature coupled with the heat generated by the I^2R losses will cause winding temperatures to rise. (ARP KK5)

DISTRACTOR ANALYSIS:

A Incorrect 1) See B.1

2) **225°F is the Maximum Lower Seal Water bearing** temperature

permitted. (P&L 3.25.4 of SOP-1.1), The Seal return temperatures will also be affected due to the loss of SW cooling to CCW and **is a separate RCP TRIP criteria.**

Plausible: The temperature provided is **also RCP trip criteria,** and easily confused with the motor bearing temperatures. Seal water temperatures would also be affected with a loss of SW indirectly through increased Charging temperatures, (letdown and seal return heat exchangers will be less capable of removing heat over time).

B. Correct 1) ALL RCP motor air coolers are cooled by B train SW. B Train SW Loss will affect these coolers therefore the motor winding temperatures will rise.

2) IAW AOP-10 version 16, step 13 requires RCP motor bearing temperatures to be maintained less than 195°F, else a Reactor trip is required.

C. Incorrect 1) RCP motor coolers are supplied from B train SW header; these coolers will be affected by the loss of B Train SW header, and therefore the motor winding temperatures will rise if the RCP were to run.

Plausible: since only one train of SW supplies the motor coolers the examinee must have sufficient integrated system knowledge to recall **which train of SW will impact the RCP motor winding temps.** This would be correct if the A Train SW header was lost instead.

2) See A.2

Plausible: Properly recalling the integrated system relationship but confusing the RCP trip criteria would result in this response.

D. Incorrect 1) See C.1
2) See B.2

Plausible: This combination would be correct if the A train of SW was "IN-SERVICE" and also Lost.

K/A: 003G2.1.23	Reactor Coolant Pump System (RCPS)—Ability to perform specific system and integrated plant procedures during all modes of plant operation.
Importance Rating:	4.3 4.4
Technical Reference:	SOP-1.1, v 45.0 AOP-10, v 16.0 FSD A181001, v 58.0
References provided:	None
Learning Objective:	NAME AND EXPLAIN the RCP Trip Criteria, to include the following subjects (OPS-52101D06): • RCP Vibration and Temperature Limitations RECALL AND DISCUSS the Precautions and Limitations (P&L), Notes and Cautions (applicable to the "Reactor Operator") found in the following Procedures (OPS-52101D09): • SOP-1.1, Reactor Coolant System EVALUATE plant conditions and DETERMINE if any system components need to be operated while performing AOP-10.0, Loss of Service Water. (OPS-52520J06).
Question History:	MODIFIED FNP bank (AOP-10-52520J06 001; AOP-10.0-52520J07 001)
K/A match:	KA match: RCP specific operation = trip criteria (PT 2) related to integrated system procedures = condition imposed by the loss of SW (AOP-10); and Integrated system knowledge = SW supply to RCP motor coolers (PT 1); These conditions are applicable in all modes of operation where a RCP is running.
SRO justification:	*N/A*

1. AOP-10.0-52520J06 001/HLT//M (LEVEL 1) PROC/APE062AG2.1.23//Y//

Bank question which was modified. This Pt 3 eliminated since there are 3 pieces of data. modified Format to 2 +2... STATISTICS remain unchanged Eliminated Winding temperature limit of 300°F.

Unit 1 is at 50% power with the following conditions:

- A total loss of all Service Water in the on-service tra
- AOP-10, Loss of Service Water, has been entered.
- RCP temperatures are beginning to rise.

Based on RCP temperatures, which ONE of the following describes the actions operators must take in response to the given conditions?

A. When any RCP Stator Winding temperature reaches 300°F; stop the affected RCP(s), then trip the affected unit.

B. When any RCP Stator Winding temperature reaches 225°F; trip the affected unit, then stop the affected RCP(s).

C. When any RCP Motor Bearing temperature reaches 225°F; stop the affected RCP(s), then trip the affected unit.

D. When any RCP Motor Bearing temperature reaches 195°F; trip the affected unit, then stop the affected RCP(s).

1. AOP-10.0-52520J07 001/HLT//C/A 3.4/3.6/076K3.01////

Unit 2 is at 38% power. The following conditions exist:

- 'A' Train is On-Service.
- STP-80.1, Diesel Generator 1-2A Operability Test, is in progress.
- 1-2A DG is running at full load on Unit 2.

A loss of the A Train SW header occurs due to a rupture on the supply header, resulting in the following conditions:

- AOP-10.0, Loss of Train A or B Service Water, is implemented.
- PI-3001A, SW TO CCW HX HDR PRESS, is 0 psig.
- PI-3001B, SW TO CCW HX HDR PRESS, is 61 psig.

Which one of the following describes a potential effect on the unit and the action(s) required IAW AOP-10.0, Loss of Service Water?

A. • RCP motor air coolers will lose cooling water flow;

• Trip the reactor and ALL RCPs if motor stator temperatures exceeds 275°F.

B✓ • RCP motor bearing temperatures will rise;

• Trip the reactor and ALL RCPs if motor bearing temperatures exceed 195°F.

C. • 1-2A DG will lose cooling water flow;

• Isolate the A Train Service Water Supply to the Turbine Building.

D. • Main Generator bearing and Hydrogen temperatures will rise;

• Isolate BOTH Trains of Service Water to the Turbine Building and trip the Main Turbine.

4. 003K6.02 004/BANK/VOGTLE 2011/MEM 2.7/3.1/003K6.02/N/2/FIX 2.7/

Which one of the following completes the statements below describing the basis for closing the listed valves per ECP-0.0, Loss of All AC Power?

- V-127A&C (B&D), SEAL WATER INJ FILTER A (B) INLET ISOLs.
- HV-3045 & HV-3184, CCW FROM RCP THRM BARR.

Seal Water Injection Filter Isolations are closed to prevent _(1)_ .

RCP Thermal Barrier Return valves are closed to prevent _(2)_ .

	(1)	(2)
A.	filling the RHT via the VCT relief	CCW system voiding
B.	filling the RHT via the VCT relief	a potential Thermal Barrier LOCA
C.	damaging RCP seals	CCW system voiding
D.	damaging RCP seals	a potential Thermal Barrier LOCA

From ECB-0.0, isolation of **seal water injection** is done to prevent the automatic delivery of relatively cold seal injection flow into the RCP number 1 seal chamber and shaft area which has the potential for thermal shock and subsequent damage to the RCP seals and shaft.

Isolating the **seal return line prevents** seal leakage from filling the volume control tank (VCT) (via seal return relief valve outside containment) and subsequent transfer to other auxiliary building holdup tanks [@ FNP this is the Recycle Holdup Tank [RHT]) (via VCT relief valve) with the potential for radioactive release within the auxiliary building.

Isolating the RCP thermal barrier CCW return outside containment isolation valve prepares the plant for recovery while protecting the CCW system **from steam formation due to RCP thermal barrier heating,** thus keeping the main portion of the CCW system available for cooling equipment when power is restored.

Distractor Analysis:

A. Incorrect 1) ***Seal return lines*** are isolated for this purpose. Isolating Seal injection alone would not prevent this from occurring, since seal leakoff would occur even without seal injection flow.

Plausible: If seal returns were not isolated then this would be the consequence; this could be confused with the reason for isolating seal injection ***since without knowledge of the CHG pump discharge check*** valve orientation with the Miniflow valves, one could conceive a flowpath

back to the VCT from the Seal injection line.

2) See discussion above.

B. Incorrect 1) See A.1
2) Plausible: Should this flowpath remain aligned and the CCW pumps started, the rapid cooldown of the previously voided thermal barrier HX would occur. This rapid cooldown **would cause a significant thermal stress** on the thermal barrier; This significant thermal stress could result in damage to the Thermal barrier causing damage and potential rupture. A LOCA however would be prevented still due to the design of the CCW thermal barrier cooling piping (auto-isolation and pressure rating). Logically one could assume that the purpose of isolating the thermal barrier is similar to the reason for isolating seal injection.

This answer combines the flowpath error/mismatch of basis of isolating the seal return line with that of a logical response for the reason of CCW thermal barrier isolation.

C. Correct 1) See above
2) See above

D. Incorrect 1) See above
2) See B.2

Plausible: This answer would be chosen if one was aware of the reason for isolating Seal Injection flow (thermal stress =seal failure induced LOCA) , and incorrectly concluded a similar concern was the reason for isolating the thermal barrier (thermal stress induced LOCA).

K/A: 003K6.02 Reactor Coolant Pump System (RCPS)—Knowledge of the effect of a loss or malfunction RCP seals and seal water supply will have on the RCPS.

Importance Rating:	2.7 3.1
Technical Reference:	FNP-0-ECB-0.0,v3.0
References provided:	None
Learning Objective:	STATE AND EXPLAIN the basis for all Cautions, Notes, and Actions associated with (1) ECP-0.0, Loss of All AC Power; (2) ECP-0.1, Loss of All AC Power Recovery, Without SI Required; (3) ECP-0.2, Loss of All AC Power Recovery, With SI Required. (OPS-52532A03).
Question History:	BANK; Vogtle 2011 NRC exam
K/A match:	Knowledge of the impact on the RCP shaft seals if NOT isolated during the performance of ECP-0.0 is required. The second portion of the question does not directly assess impact on the RCP operation but will prevent operation of the RCP because all Seal cooling was lost. **modified format** of Vogtle question to minimize burden on the student and to **eliminate specific determiners** as much as practical per NUREG 1021 Appendix B; altered distractor Part 2 for plausibility concerns.
SRO justification:	N/A.

5. 003K6.02 001/2/1/RCP SEALS/2.7/3.1 MEM/LOIT BANK/RO/SRO/NRC/GCW

Which ONE of the following is the CORRECT basis for closing the below listed valves while performing 19100-C, "Loss of all AC Power"?

1) HV-8103A, B, C, D the RCP Seal Injection Isolation valves.

2) HV-1979 ACCW Supply Header ORC Isolation valve.

A. 1) prevents seal leakage to the VCT which could relieve to the Auxiliary Building.

2) minimizes steam formation in ACCW system due to Thermal Barrier heating.

B. 1) prevents potential damage to the RCP seals and shaft on CCP restarts.

2) minimizes steam formation in ACCW system due to Thermal Barrier heating.

C. 1) prevents seal leakage to the VCT which could relieve to the Auxiliary Building.

2) prevents runout of the ACCW pump as voids collapse in Thermal Barrier piping.

D. 1) prevents potential damage to the RCP seals and shaft on CCP restarts.

2) prevents runout of the ACCW pump as voids collapse in Thermal Barrier piping.

003 Reactor Coolant Pump System (RCPS)

Knowledge of the effect of a loss or malfunction on the following will have on the RCPS:
(CFR: 41.7 / 45/5)

K6.02 RCP seals and seal water supply

K/A MATCH ANALYSIS

Question gives a plausible scenario where a Loss of All AC Power occurs. Candidates have to know the basis for isolating ACCW valves to RCP seals on power restoration.

ANSWER / DISTRACTOR ANALYSIS

A. Incorrect-Plausible because not isolating could potentially lead to the leakoff filling the VCT but not the correct answer-The Seal Injection valves are closed for the future of starting CVCS charging pumps and preventing cold seal injection water from damaging (thermal shocking) the RCP seals. Plausible because part 2 is correct for ACCW isolation.

B. Correct-Reasons above for seal isolation and ACCW isolation.

C. Incorrect-Plausible because part 2 is correct-ACCW is isolated to prevent the upcoming start of ACCW pumps could damage the ACCW system due the steam formation that could have occurred upon heating up of the RCP thermal barrier.

D. Incorrect-The Seal Injection valves are closed for the future of starting CVCS charging pumps and preventing cold seal injection water from damaging (thermal shocking) the RCP seals. Part 2 is incorrect but plausible because the voids in ACCW would collapse but no runout would occur.

REFERENCES

V-LO-HO-37031-001-C, Loss of All AC Power.
HL-15 Audit
LOIT Bank 003K6.02-01

VEGP learning objectives:

LO-PP-16401-03 Describe the control room indications for a failure of a RCP seal.

LO-PP-16401-05 Given a loss of RCP Seal Injection, describe the indications that would be monitored and impact to continued operation of the RCP.

5. 004A1.10 005/NEW/N/A/C/A 3.7/3.9/004A1.10/N/3/HBF/GTO/

A Unit 1 Startup is in progress from a Mid-cycle forced outage. The following conditions exist:

- The RX is in Mode 1, MOL.
- A letdown malfunction has occurred.
- AOP-16.0, CVCS Malfunction, is in progress.
- Excess letdown is being placed into service using SOP-2.7, Chemical And Volume Control System Excess Letdown.
- Excess letdown was LAST in service at BOL of the current Cycle.

Which one of the following completes the statements below regarding the operation of the excess letdown system?

An **ineffective** flush on the excess letdown system will result in a __(1)__ .

Once in service, Excess Letdown __(2)__ impact the accuracy of the ONLINE calorimetric's INDICATED THERMAL POWER on the IPC.

	(1)	(2)
A.	dilution	WILL
B.	boration	WILL
C.	dilution	will NOT
D.	boration	will NOT

With the exception of a short period of time Early in Core life (< 5000 MWD/MTU) Boron concentration is constantly lowering as the core ages. (REF: PCB-1-VOL1-CRV1 rev 25)

Since the Excess letdown heat exchanger would be filled with a volume of water which has the BORON concentration of a time earlier in core life, it would contain a HIGHER boron concentration. Therefore, **if ineffectively/insufficiently** flushed, when realigned to the VCT would cause a boration event.

AOP-16, v17.0, NOTE 1 states, **"Placing Excess Letdown in service will cause indicated reactor thermal power to *read higher than actual power* due to the IPC computing no heat loss due to letdown while there is actual loss due to the Excess Letdown."**

Distractor Analysis:

A. Incorrect 1) See discussion above; Plausible if the EXCESS letdown were in service at EOL of previous cycle, then this would be correct.

2) See above.

B. Correct see above.

C. Incorrect 1) See A.1

2) The IPC ONLINE Calorimetric program is impacted. Plausible: Since Normal letdown is accounted for, isolating normal letdown does not result in an equivalent inaccuracy.

D. Incorrect 1) See B.1

2) See C.2

K/A: 004A1.10 **Chemical and Volume Control System**—Ability to predict and/or **monitor changes in parameters** (to prevent exceeding design limits) associated with operating the CVCS controls including: **Reactor power**.

Importance Rating:	3.7 3.9
Technical Reference:	FNP-1-AOP-16, v17.0 FNP-1-SOP-2.7, v11.1 PCB-1-VOL1-CRV1,v25
References provided:	None
Learning Objective:	STATE the symptoms and PREDICT the impact a loss or malfunction of Chemical and Volume Control System components will have on the operation of the Chemical and Volume Control System (OPS-52101F02) STATE AND EXPLAIN the operational implications for all Cautions, Notes, and Actions associated with AOP-16, CVCS Malfunction. (OPS-52520K03)
Question origin:	NEW
K/A match:	EXCESS letdown operation can affect REACTIVITY of the core (RX POWER). The impact on reactivity and INDICATED Thermal power both address the "MONITORING changes" as a result of manipulating the CVCS system. IMPACT on RX POWER from dilution/boration was **sidestepped due to the complication of discussion of reactivity during critical operations--** Rx power does rise (less poisons), but then TEMP coefficient causes power to fall. This dilution/boration issue is **directly related** to the resultant POWER response.
SRO justification:	N/A

6. 005A2.02 006/NEW/N/A/C/A 3.5/3.7/005A2.02/N/2/MAJOR MOD-V3/REPLACEMENT

Unit 1 is performing a Startup from Cold Shutdown. The following conditions exist:

- The RCS is solid.
- SOP-1.3, Reactor Coolant System Filling And Venting – Vacuum Method, is in progress.
- HIK-142, RHR TO LTDN HX controller, setting is at 80% demand.
- RCS pressure is 340 psig and ↔.
- RCS temperature is 177°F and ↔.
- LP letdown is aligned to B Train RHR.

The air supply to the valve operator for HCV-142 has been severed.

Which one of the following completes the following statements?

Without any operator actions RHR suction Relief valves _(1)_ Lift.

The required actions are to _(2)_ .

	(1)	(2)
A.	WILL	adjust HIK-603B, 1B RHR DISCH VLV, to raise RHR flow
B.✓	WILL	adjust FK-122, CHG FLOW to reduce charging flow
C.	will NOT	adjust FK-122, CHG FLOW to raise charging flow
D.	will NOT	Stop the 1B RHR pump

*HG5, SOLID RCS PRESS HI, Alarm would alarm due to this malfunction; STEP 3 states: "**manually control PK-145/ HIK-142" and ADJUST CHG FLOW FK-122 to reduce Charging flow.***

Distractor Analysis:

A. Incorrect 1) See B.1
2) Opening HIK-603B, raising RHR flow would cooldown the RCS and potentially impact on the energy/mass balance and would reduce the inventory lost via the Relief valves. This action however is NOT directed.

Plausible: If one correctly assessed that HIK-142 failed Closed, raising RHR discharge flow rate (RCS cooldown rate) would seem a logical response since RHR is controlling RCS temperature, and this may allow for reduction of RCS pressure when solid.

B. Correct 1) RCS pressure will rise due to a mismatch between Charging and Letdown flow. PCV-145 is in automatic control, charging is in manual control (auto not available due to a FULL PZR). Upon a loss of LP

letdown, the only available LETDOWN flow is that which passes through the NORMAL letdown orifices. The LOW DP would result in insufficient letdown flow (see calculation below) and the mass imbalance would result in a rapid pressure rise to the RHR Suction relief setpoints of 425 psig.

Given: LETDOWN orifice capability is 165 GPM (1-45 gpm and 2-60 gpm) @ 2235 psig RCS pressure.

PCV-145 is in AUTO maintaining 340 psig in both HP and LP conditions.

$$\dot{M} \propto \sqrt{DP}$$

$$\dot{M} \propto \sqrt{DP} \qquad M_{LP} \propto M_{HP}\frac{\sqrt{DP_{LP}}}{\sqrt{DP_{HP}}} \propto \left[165\ gpm\left(\frac{\sqrt{(425-340\ psig)}}{\sqrt{(2235-340\ psig)}}\right)\right] \propto 35\ gpm$$

$$\xRightarrow{Therefore} M_{chg+Seal\ Injection} \gg M_{letdown} \xRightarrow{Therefore} M_{in} \gg M_{out} \xRightarrow[as\ a\ result]{} RCS\ pressure\ rises > 425$$

2) see HG5 ARP guidance above to adjust charging flow.

C. Incorrect 1) see above; **Plausible:** if either of the following misconceptions occurred:

- **The fail position of HCV-142 were recalled incorrectly as OPEN (vs closed);** FCV-122, CHG FLOW CONTROL, and HCV-186, SEAL WATER INJECTION FLOW CONTROL, both fail OPEN upon loss of air.
- **The flow through NORMAL letdown was incorrectly considered** sufficient to prevent a sufficient pressure rise in the RCS.

2) see A.2;
Plausible: under the misconception of HIK-142 failing OPEN, RCS Pressure would be considered falling and Raising Chg flow would stabilize/stop the pressure drop.

D. Incorrect 1) see C.1
2) Stopping the RHR pump is NOT directed and would not allow for temperature control of the RCS, this would likely exacerbate the pressure control problem.
Plausible: under the misconception of HIK-142 failing OPEN, RCS Pressure would be considered falling and stopping the 1**B RHR pump would terminate the driving head for this flowpath and terminate the pressure loss.** This is procedurally directed if the RHR pumps were cavitating or if there was a ISLOCA on RHR system.

Additionally, if ARP CF1, RHR discharge High pressure, (due to RHR discharge relief valve operation) occurred before the SUCTION RELIEF valves lifted (setpoint or pump DP error) then this is an appropriate response.

K/A: **005A2.02 Residual Heat Removal System (RHRS)**—Ability to (a) predict the impacts of the following malfunctions or operations on the RHRS, and (b) based on those predictions, use procedures to correct, control, or mitigate the consequences of those malfunctions or operations: Pressure transient protection during cold shutdown

Importance Rating:	3.5 3.7
Technical Reference:	FNP-1-ARP-1.8, v35.1 FNP-1-AOP-6.0, v39 FNP-1-ARP-1.3, v28.1 FNP DESKTOP simulator (IC# 005)
References provided:	None
Learning Objective:	RELATE AND IDENTIFY the operational characteristics including design features, capacities and protective interlocks for the components associated with the Chemical and Volume Control System, to include the components found on Figure 3, Chemical and Volume Control System and Figure 4, RCP-Seal Injection System (OPS-40301F02).
Question History:	NEW
K/A match:	KA a) **IMPACT on RHR system is directly** addressed. HCV-142 is part of the RHRS during LOW PRESSURE & TEMP conditions, an the stated malfunction results in a pressure transient that will open the RHR reliefs. The examinee must understand the importance of LP letdown when in solid plant pressure control and the LTOP protection relief valves function. KA b) Knowledge of ARP response for said malfunction.
SRO justification:	N/A

7. 005AK2.02 007/BANK/NORTH ANNA 2009/C/A 2.5/2.6/APE005AK2.02/N/3.3/MAJOR MOD-V3/REPLACEMENT

Given the following conditions on Unit 1:

- Rod H2, Control Bank D Group 1 rod, is mis-aligned **LOW**.
- Operators are preparing to realign the rod in accordance with AOP-19.0, Malfunction of Rod Control System.

Which one of the following completes the statements below?

AOP-19.0 will direct the crew to open the lift coil disconnect switches for Control Bank D _(1)_ , except for Rod H2.

As a result of this action, _(2)_ , will alarm when Rod H2 is withdrawn.

	(1)	(2)
A.	Group 1 rods **ONLY**	FF2, ROD CONT SYS NON-URGENT FAILURE
B.	Group 1 rods **ONLY**	FF1, ROD CONT SYS URGENT FAILURE
C.	Group 1 and Group 2 rods	FF2, ROD CONT SYS NON-URGENT FAILURE
D.	Group 1 and Group 2 rods	FF1, ROD CONT SYS URGENT FAILURE

From AOP-19.0, v29.0, Attachment 2 step 3 will align the lift coil disconnect switches for "all non-affected rods in the **affected BANK.**" This means that **GP 1 and GP 2 rods for CB D will be positioned to Disconnect**.

Attachment 2 step 6-NOTE states:
"[...Repositioning a single rod...] will cause the ROD CONT SYS URGENT FAILURE annunciator **FF1 to actuate**. This will lock out the non-affected group step counter."

Distractor Analysis:

A - Incorrect. 1) plausible since the affected rod is in this group;
2) plausible since an urgent failure locks up rods (but only in the AFFECTED cabinet) and the candidate who does not have detailed systems/procedure knowledge may eliminate the urgent failure as a possibility and default to this distractor.

B - Incorrect 1) See A.1;
2) provided the action to open lift coil disconnects is performed correctly.

C - Incorrect 1) see above.
2) See A.2.

D - Correct. SEE AOP-19 excerpts above.

K/A: 005AK2.02 **Inoperable/Stuck Control Rod**—Knowledge of the **interrelations** between the Inoperable / Stuck Control Rod and Breakers, **relays, disconnects**, and control room switches.

Importance Rating:	2.5 2.6
Technical Reference:	FNP-1-AOP-19, v29
References provided:	None
Learning Objective:	EVALUATE plant conditions and DETERMINE if any system components need to be operated while performing AOP-19, Malfunction of Rod Control System. (OPS-52520S06).
Question History:	FNP BANK (HLT-34 audit); modified from North Anna 2009-Re-take
K/A match:	KA match PT 1: since knowledge of operation of the ROD CONTROL SELECTOR switch and the LIFT COIL DISCONNECT switches is required as it relates the Abnormal Operating Procedure implemented for a misaligned rod.
SRO justification:	N/A

Bank question-- not yet in main bank (HLT34 Audit exam-- 2009 North Anna-Retake).

7. Given the following conditions on Unit 1:

- Rod H2, Control Bank D group 1, is mis-aligned **LOW**.
- Operators are preparing to realign the rod in accordance with AOP-19.0, Malfunction of Rod Control System.

Which one of the following completes the statements below?

AOP-19.0 will direct the crew to open the lift coil disconnect switches for Control Bank D _(1)_ , except for Rod H2.

As a result of this action, _(2)_ will alarm when Rod H2 is withdrawn.

A. (1) Group 1 rods **ONLY**

(2) FF2, ROD CONT SYS NON-URGENT FAILURE

B. (1) Group 1 rods **ONLY**

(2) FF1, ROD CONT SYS URGENT FAILURE

C. (1) Group 1 and Group 2 rods

(2) FF2, ROD CONT SYS NON-URGENT FAILURE

D. (1) Group 1 and Group 2 rods

(2) FF1, ROD CONT SYS URGENT FAILURE

8. 005K5.02 008/MOD/FNP-NO NRC/MEM 3.4/3.5/005K5.02/N/2/MAJOR MOD-V1/

The following conditions exist on Unit 1:

- EEP-1.0, Loss Of Reactor Or Secondary Coolant, is in progress.
- Both Trains of CCW are available.
- RCS pressure is 1100 psig and slowly ↑.
- MOV-3185A, CCW to 1A RHR HX, will not open from the MCB.

Which one of the following completes the statement below per EEP-1.0?

If the 1A RHR pump continues to run on recirculation for __(1)__ ,

pump damage could occur due to __(2)__ .

	(1)	(2)
A.	3 hours	a loss of CCW cooling to the seal cooler
B✓	3 hours	cavitation
C.	1 hour	a loss of CCW cooling to the seal cooler
D.	1 hour	cavitation

VARIOUS EMERGENCY RESPONSE PROCEDURES, including EEP-1.0 step 9.0 , contain the Caution which states:

Pump damage may occur if RHR pumps are on mini-flow for longer than **three hours with no CCW supplied to the RHR heat exchangers.**

The RHR pump impeller is cooled by the process flow; ***if RCS pressure remains sufficiently high (>shutoff head)*** the RHR system process flow will recirculate HX outlet back to the pump suction. BECAUSE CCW is NOT NORMALLY aligned to the RHR HX (MOV-3185A/B are normally shut), the pump heat will eventually heat this fluid and result in pump damage **(FSD 181002 para 3.1.7.3**).

FNP-0-FRB-H.1,v3.0 step 19 Caution-3 BASIS (et al) provides the following information:

There are **two basic failure mechanisms for the RHR pumps when CCW to the RHR heat exchangers is lost.** The failure mechanisms ***depend on the pump manufacturer*** *and the NPSH requirements of the pump.* With no cooling provided to the RHR heat exchangers, the temperature of the pumped fluid will gradually increase. As a result, the **NPSH requirements may not be satisfied and cavitation of the pumps may occur, causing excessive vibration, possible pump seizure, bearing damage, gasket and seal leakage, and motor failure.** If NPSH requirements are not maintained, overheating of the pumps may occur. The initial affects of pump overheating may be leakage through the mechanical seals which may show accelerated wear if the pumped fluid exceeds the design temperature of the seals. Due to the tight tolerances between the impeller and wear rings, thermal expansion may cause the impeller to seize on the stationary parts,

possibly resulting in significant pump or motor failure.

In conclusion, the two main failure mechanisms are pump overheating and cavitation. Either or both of these mechanisms ***may lead to pump*** and motor failure, depending on the factors described above.

AT FNP, the RHR pump seals are also cooled/lubricated by process fluid, however this fluid is recirculated within the seal through a cooler; that cooler serviced by CCW **upstream of MOV-3185A/B.**

Distractor Analysis:

A. Incorrect 1) see above.
2) The RHR pump seal cooler is supplied by CCW and CCW flow is not impacted by MOV-3185A/B position.

Plausible: The RHR PUMP Seal cooler CCW supply is attached just upstream of MOV-3185. IF one incorrectly thought that this cooling supply was downstream then the seal cooler WOULD be affected. This misconception is possible in that the seal cooler generally is only required during operations where the RHR suction is aligned to a HOT water supply (SUMP or RCS). When running for injection purposes, the cool RWST water would provide sufficient cooling to the seal.

B. Correct See above.

C. Incorrect 1) The RHR pump seals are Mechanical seals and if they are not cooled or lubricated, they would fail sooner than the pump impeller damage occurs due to cavitation or loss of clearance due to thermal expansion.

2) Step 9 Caution allows up to 3 hours in this condition.

Plausible: if CCW cooling was not aligned to the seal cooler, CG1 (CG2) CCW FLOW LO alarms would actuate **immediately upon closing the RHR pump breaker**; the a**ctions for this ARP is to STOP the RHR pumps in accordance with SOP-7.0.**

Since the time requirement to stop the pump is NOT IMMEDIATE, and **Step 6 of EEP-1 requires actions within 1 hour** from start of the event, one may believe this time limit is linked to the CCW cooling alignment or stopping of the RHR pump.

D. Incorrect 1) See C.1 and plausibility.
2) see above

K/A: 005K5.02 **Residual Heat Removal System (RHRS)**— Knowledge of the operational implications of ***the need for adequate subcooling*** as it applies [to] the RHRS.

Importance Rating: 3.4 3.5

Technical Reference:
FNP-1-EEP-1.0, v30.0
FNP-0-EEB-1.0, v3.0
FNP-0-FRB-H.1, v3.0
U732811, v1.0
D175002 sh 001, v48.0

References provided: None

Learning Objective: **DEFINE AND EVALUATE** the operational implications of normal / abnormal plant or equipment conditions associated with the safe operation of the Residual Heat Removal System components and equipment, to include the following (OPS-40301K07) Normal Control methods [...]

STATE AND EXPLAIN the basis for all Cautions, Notes, and Actions associated with ECP-2.1, Uncontrolled Depressurization of All SGs. (OPS-52532F03).

ANALYZE plant conditions and DETERMINE the successful completion of any step in ECP-2.1, Uncontrolled Depressurization of All SGs. (OPS-52532F07)

Question History: MOD FNP Bank (ECP-2.1-52532F07 001); changed distractor (X2) from bearing -- Bearings are technically not a correct answer. The Technical Manual eluded to pump end damage, but did NOT eliminate the concern for seal damage (clarified seal cooler). changed distractor (X2) from 3 min to 1 hour due to improved plausibility.

K/A match: KA match is addressing the need for subcooling -- related to pump damage and the allotted time the RHR pump can be permitted to run on recirc prior to damage per ERPs. AS discussed in the Basis documents noted, the inability to align CCW cooling to the RHR Hx would result in a loss of subcooling--> cavitation and possible seizure.

Subcooling as it relates to RHR on recirc= without cooling Pump end cavitation and impeller damage (loss of clearances)

The second part of this question was changed to target the CCW flow availability to the Seal Cooler (flowpath) vs differentiating where the damage would occur. This was due to dispute regarding technical accuracy of the statement.

1. ECP-2.1-52532F07 001/HLT//MEM 3.5/3.8/W/E12EK1.2////

The following conditions exist on Unit 1:

- ECP-2.1, Uncontrolled Depressurization Of All Steam Generators, is in progress.
- Both Trains of CCW are available.
- MOV-3185A, CCW to 1A RHR HX, will not open from the MCB.

Which one of the following completes the statement below?

The 1A RHR pump must be secured _(1)_ due to the potential for overheating of the RHR pump _(2)_.

	(1)	(2)
A.	3 hours	seals
B✓	3 hours	bearings
C.	3 mins	seals
D.	3 mins	bearings

FNP Bank-- BEARINGS was NOT TECHICALLY correct. Bearings are oil bath vs process cooled. SEALS are arguably correct.
3 mins less plausible than 1 hour since this action is not part of E-0 response (15 mins IOAs).

MODIFIED time to 1 hour for plausibility;
Modified Bearings to NPSH/ cavitation. Also clarified SEAL cooling vs seal damage since seal damage COULD occur.

9. 006K4.11 009/NEW/N/A/MEM 3.9/4.2/006K4.11/N/2/MAJOR MOD-V1/

An automatic Safety Injection has actuated on Unit 1.

The conditions that caused the Safety Injection to actuate is now clear.

Which one of the following completes the statements below?

_(1)_ permits RESET of the Safety Injection signal when the SI RESET A(B) TRN pushbutton is depressed.

To allow a subsequent automatic Safety Injection Actuation to occur the _(2)_

(1)	(2)
A. A 60 second time-delay relay	ESS STOP RESET pushbutton on the sequencer(s) that ran must be depressed
B. A 60 second time-delay relay	Reactor Trip Breakers must be closed
C. The P-4, Reactor Trip Interlock,	ESS STOP RESET pushbutton on the sequencer(s) that ran must be depressed
D. The P-4, Reactor Trip Interlock,	Reactor Trip Breakers must be closed

REF FSD 181007, v17 Figure 2 Sheet 8:

The safety injection signal can be reset **after a 60-second time delay (red line)**. To RESET the safety injection, the SI RESET A(B) TRN push buttons (one per train) is momentarily depressed. **IF the timer and the RESET pushbuttons are depressed,** then a signal to the memory retentive relay (Blue line input) is RESET.

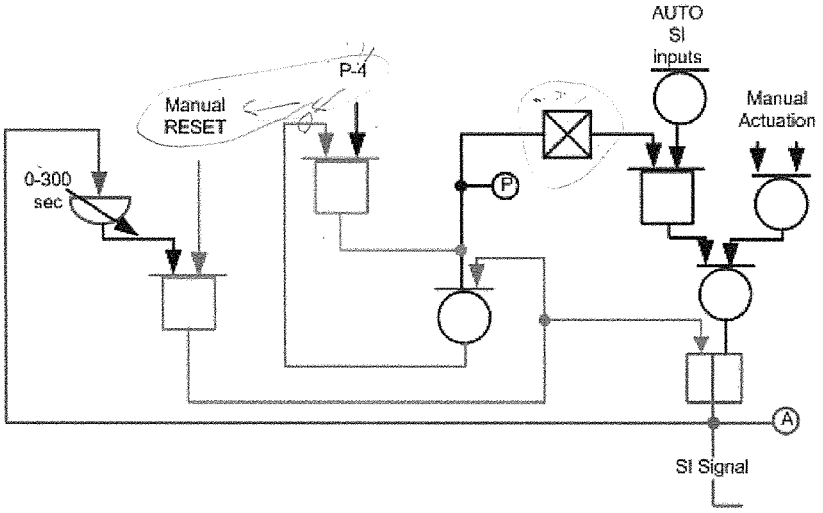

IF P-4 is present, Then the RESET signal coincident with P-4 (ORANGE and BLACK line out of the NOT BOX) BLOCKS any Automatic actuation signals, whether they are currently present or are subsequently initiated.

ESP-1.1, v25.0 step 34 restores automatic SI capability, if plant conditions permit. A check is made first to ensure either no automatic SI signals are present, or that automatic SI signals are blocked if blocking capability exists.

TO RESTORE this automatic Actuation capability, the P-4 signal must be removed. This is done by CLOSING the RX trip breakers (step 34.7). Doing so causes the SI BLOCKING SEAL in to be removed, and the "NOT BOX" returns to a NOT activated state; ALLOWING any subsequent AUTO SI signal to reach the Memory RETENTIVE Actuation RELAY if needed.

Distractor Analysis:

A. Incorrect 1) See above.
2) This action will NOT RESTORE the SSPS Automatic SI signal; Instead this will RESET the ESF sequencer. Pushing this button will ALLOW the sequencer to RE-RUN its LOSP-ONLY program upon if an LOSP occurred.

Plausible: This describes the actions necessary to RESET the ESF sequencers. This restores the sequencer's "memory" of the occurrance (and unit for shared sequencers) that Safety Injection had actuated and is required to RESTORE THE SEQUENCER for a subsequent Automatic LOSP actuation. The SEQUENCER and SSPS features/functions are closely related and often confused with one another.

B. Correct 1) See above. The RESET of SI only requires the TDPU relay to actuate in conjuction with the actuation of the Manual RESET pushbuttons, when there are no pre-existing SI actuation signals.

2) See above.

C. Incorrect 1) The **RESET function is NOT affected by P-4 alone.** As discussed above and stated in SOP-0.3 Appendix G, P-4 "Allows S.I. signal to be **blocked after S.I. initiation**"; P-4 is needed to prevent a subsequent automatic actuation of SI and to block pre-existing SI signals such that a re-actuation (re-establishment of the SI signal-- if it clears at all) upon release of the pushbutton.

Plausible: Since the Time Delay feature is not normally operated, it is often forgotten. Further, IF the originating (or other SI actuation signal remained) then the RESET feature would ALSO require the BLOCK feature to be effective.

2) See A.2

D. Incorrect 1) See C.1
2) See B.2

Plausible: This answer choice is plausible if the P-4 interlock alone is incorrectly thought to be required for both RESET and RESTORATION of

incorrectly thought to be required for both RESET and RESTORATION of the SI signal.

K/A: 006K4.11 Emergency Core Cooling System (ECCS); Knowledge of ECCS design feature(s) and/or interlock(s) which provide for the ***Reset of SIS.***

Importance Rating:	3.9 4.2
Technical Reference:	A181007, v18.0 FNP-0-SOP-0.3, v46.0 FNP-1-ESP-1.1, v25
References provided:	None
Learning Objective:	**DEFINE AND EVALUATE** the operational implications of abnormal plant or equipment conditions associated with the operation of the Reactor Protection System (RPS) components and equipment to include the following (OPS-52201I09).
Question History:	NEW
K/A match:	knowledge of the Time Delay Relay which permits the SI signal to be "RESET" allowing component manipulation, AS WELL AS knowledge of HOW to "RESTORE (reset) the AUTOMATIC SI actuation circuit.
SRO justification:	

10. 007EG2.1.20 010/MOD/FNP-NO NRC/C/A 4.6/4.6/007EG2.1.20/N/2/FIX 2.21/EDITORIAL

The crew has manually tripped the Unit 2 reactor from 100% due to thrust bearing wear measurements reaching 40 mils per SOP-28.1, Turbine Generator Operation. The following conditions exist:

- A MANUAL Turbine trip was attempted.
- All Governor valves are closed.
- All Throttle Valves are OPEN.
- ESP-0.1, Reactor Trip Response, is in progress.
- The Main Generator output 500 KV BKRs 1002 & 1102 are closed.

Which one of the following completes the statements below?

The Main Generator output breakers are required to be opened _(1)_ per ESP-0.1, Rx Trip Response.

The reason the procedure directs placing the REVERSE POWER switch in "BYPASS" position is to _(2)_ .

	(1)	(2)
A.	IMMEDIATELY	disable the FAST BUS TRANSFER circuit and allow re-energizing the RCP buses from the Start Up Transformers, if not already aligned.
B.	IMMEDIATELY	permit OPENING the breakers without a reverse power condition
C.	AFTER a 30 second delay	disable the FAST BUS TRANSFER circuit and allow re-energizing the RCP buses from the Start Up Transformers, if not already aligned
D.	AFTER a 30 second delay	permit OPENING the breakers without a reverse power condition

Distractor Analysis:

A. Incorrect 1) See D.1; The turbine trip was a result of Manual actions, No automatic actions (trips have occurred) Plausible: IMMEDIATE describes the **expected AUTOMATIC response IF** Thrust bearing wear had degraded to cause 75 psig backpressure - thus a mechanical trip actuation of the Turbine and subsequent IMMEDIATE Generator trip.

2) See D.2; ESP-0.1 RNO step 13.2.1 directs the operator to "verify RCP busses energized" from the SUTs. In order to satisfy this step, the **SYNC**

SWITCH is ALSO placed in BYPASS (SOP-36.2 step 4.1.1.3). One may confuse the SYNC SWITCH bypass position with the REVERSE POWER relay of the Generator output breakers in that a sync check relay.

B. Incorrect 1) See A.1
2) See D.2

C. Incorrect 1) See D.1
2) See A.2

D. Correct 1) ESP-0.1 Step 13 (ALSO, STEP 16.1 RNO of EEP-0 ATT 2) will direct operation of the Generator OUTPUT breakers after a 30 second delay. This delay is generally for maintaining force flow in the RCS for a period of time following a full power RX trip.

2) In order to ENABLE the OPEN position of the MCB handswitch **one of three conditions must be satisfied:**

a) REVERSE POWER relay has been satisfied
b) Generator Offline Line (G.O.L) contacts must be satisfied; 810/914 breakers already open, or
c) REVERSE POWER switch in BYPASS.

This switch is positioned in ESP-0.1 (EEP-0) as a precautionary measure to compensate for a potential malfunction of the reverse power relay since, a true reverse power condition should exist shortly after the turbine is successfully tripped and tied to the grid. (AOP-3, EEP-0, or ESP-0.1)

OPERATIONAL VALIDITY:

A Main Turbine Thrust bearing wear issue would escalate in the following sequence:

- Turbine Thrust Bearing Wear (KJ4) MCB alarm -35 psig (oil back pressure)
- IF this back pressure increases to 60 psig then any subsequent Turbine Trip signal will result in an immediate GENERATOR trip (NO 30 sec delay).
- IF this back pressure increases to 75 psig, then an AUTOMATIC Turbine trip would be initiated (GJ4), which as stated above a concurrent Main Generator Trip would occur.

FNP-2-SOP-28.1, v103 has the following P&Ls which would allow for manual action **prior to the automatic response described above**:

- 3.2.3 states that a Manual Trip should be initiated if thrust bearing metal temps reach 225°; a likely condition if wear were to rise.
- 3.4.3 states that if Thrust Bearing Wear exceeds 0.040 in a turbine trip is required. KD4 alarms at 35 mills.

K/A: 007EG2.1.20 — Reactor Trip: **Ability to interpret and execute procedure steps.**

Importance Rating:	4.6 4.6
Technical Reference:	FNP-2-ESP-0.1, v30 FNP-2-SOP-36.2, v30.1 FNP-2-SOP-28.1, v112.2
References provided:	None
Learning Objective:	ANALYZE plant conditions and DETERMINE the successful completion of any step in AOP-3.0, Turbine Trip < P-9 Set Point. (OPS-52520C06) EVALUATE plant conditions and DETERMINE if any system components need to be operated while performing (1) **EEP-0, Reactor Trip** or Safety Injection and (2) ESP-0.0, Rediagnosis. (OPS-52530A06) EVALUATE plant conditions and DETERMINE if any system components need to be operated while performing **ESP-0.1, Reactor Trip Response.** (OPS-52531B06)
Question History:	MODIFIED FNP Bank (AOP-3.0-52520C03 001 & MN TURB-40202A07 015)
K/A match:	INTERPRETATION is satisfied by having the examinee explain why the action is being performed. EXECUTION is satisfied via the recollection of the time restriction to the backup of the automatic actions.
SRO justification:	*N/A*

1. AOP-3.0-52520C03 001/HLT/LOCT//C/A 3.3/3.1/062A4.01//Y/LOCT/
operation of the "BYPASS Switch" is not truly required-- since the reverse power condition would already be satisfied; it is a procedure step but not "REQUIRED" to open the breakers--- **ANSWER B would accomplish the goal of the step- just not satify the procedural compliance peice--- "REQUIRED" by procedure or required to open becomes a potential challenge for more than one correct answer.**

Unit 1 is at 20% power with the following conditions:

At 10:00

- Ramping up per UOP-1.2, Shutdown of Unit from Minimum Load to Hot Standby.
- The RCP buses are on the startup transformers.

At 10:10

- A DEH malfunction causes a Turbine trip.

About 2 minutes after the turbine trip, the Shift Supervisor notices the Main Generator output breakers are closed.

Which one of the following states the actions required due to this condition?

A. Manually open the 41 breaker.

B. Manually open the Main Generator output breakers.

C. Place the reverse power switch to "BYPASS" and manually open the 41 breaker.

D✓ Place the reverse power switch to "BYPASS" and manually open the Main Generator output breakers.

2. E-0/ESP-0.0-52530A06 010/HLT/LOCT//C/A (LEVEL 2/3) PROC/EPE007EA2.02///LOCT/

A & B are implausible -- and IDENTICAL to one another. There are no idications to allow D to be considered plausible.....UNSAT as is.
(>2 implausible distractors)

Given the following plant conditions:

- The reactor tripped 45 seconds ago.
- Turbine stop valves are closed.
- Megawatt meter at zero output.
- 230 kv breakers 810 and 914 are closed.

Which one of the following states the condition of the generator and the correct operator response?

A. Generator is acting as a load on the grid, depressurize steam lines and MSRs.

B. Generator is motoring, depressurize steam lines and MSRs.

C✓ Generator is motoring, utilize the reverse power bypass switch and trip breakers 810 and 914.

D. Generator exciter has failed, locally open 41 breaker.

3. MN TURB-40202A07 015/HLT//M (LEVEL 1) SYS/045A3.04////
Following a turbine trip, the generator trip signal is delayed 30 seconds, except when:

A. A low lube oil condition caused the turbine trip.

B. A reverse power condition occurs following the turbine trip.

C. A thrust bearing wear condition causes a turbine trip.

D. The turbine overspeeds following the turbine trip.

11. 007K5.02 011/FNP BANK/FNP 2007/C/A 3.1/3.4/007K5.02/N/2/FIX 2.7/

Unit 1 is solid in Mode 5, preparing to form a pressurizer steam space (drawing a bubble). The following conditions exist:

- UOP-1.1, Startup of Unit from Cold Shutdown to Hot Standby, is in progress.
- Vacuum refill will **NOT** be performed.
- RCS pressure is 325-375 psig and ↔.
- 1B RCP is running.
- 'A' Train RHR is in service with low pressure letdown aligned.
- RCS is in solid plant pressure control with pressurizer temperature at 178°F.
- All PRZR heaters have been energized.

Which one of the following completes the statements below per UOP-1.1?

The condition that is monitored to demonstrate the PRZR is saturated is _(1)_ .

Once the PRZR is saturated and the bubble is formed, PRT level will _(2)_ .

	(1)	(2)
A.	Letdown flow lowering	remain constant
B.	RCS Pressure rising	remain constant
C.	RCS Pressure rising	rise
D.	Letdown flow lowering	rise

no impact?

K/A: 007K5.02 **Pressurizer Relief Tank/Quench Tank System (PRTS)**—Knowledge of the operational implications of the ***Method of forming a steam bubble in the PZR*** as they apply to PRTS:

Importance Rating: 3.1 3.4

Technical Reference: FNP-1-UOP-1.1,v94.0
FSD A-181002, v 43.0

References provided: None

Learning Objective: DEFINE AND EVALUATE the operational implications of normal / abnormal plant or equipment conditions associated with the safe operation of the Chemical and Volume Control System components and equipment, to include the following (OPS-40301F07):

- Normal Control Methods
- Abnormal and Emergency Control Methods (Changes in system flow rates, Loss of control from the control room)
- Automatic actuation including setpoints (examples - Reactor Trip, SI, Phase A, LOSP/loss of all AC power)
- Actions needed to mitigate the consequence of the abnormality

Question History: FNP BANK (UOP1.2/1.3-62510B01 009); 2007 FNP NRC exam.

K/A match: In order to meet the KA, the PRT ha~~d~~s to be used in some fashion. Since the PZR liquid is directed to the RHTs as the level is being decreased, the PRT level, temp and pressure will be unaffected. To meet the KA; the method of forming the bubble is addressed by the indications that will be available when the steam space just begins to be formed; **Operational implications of the PRT are none** so level, pressure and temp will remain constant.

SRO justification: N/A

Uop-1.1 step 5.10 states, "WHEN pressurizer temperature increases to the saturation temperature for 375 psig (approximately 442°F) as indicated by increasing RCS pressure or letdown flow, THEN establish a steam space in the pressurizer as follows [...]"

Step 5.10.5 then states, "WHEN VCT level increases to 81%, THEN verify VCT HI LVL /DIVERT VLV Q1E21LCV115A in the fully diverted position."

Distractor Analysis:

A. Incorrect 1) see above.

Plausible: The candidate may not know what to expect from the letdown flow as they may not know the position of PCV-145, LETDOWN PCV, FCV-122, CHG FLOW REG, and HCV-142, RHR TO LETDOWN LINE. (plausibility of this answer choice demonstrated during 2007 NRC FNP exam-- see statistics)

2) See B.2, The PRT parameters will remain constant.

B. Correct 1) IAW step 5.10, letdown flow will **increase** as **RCS pressure increases.**
2) The PRT parameters will remain constant since the liquid from the pzr is diverted to the RHTs via LCV-115A, VCT HI LVL DIVERT VLV.

C Incorrect 1) See B.1.
2) second part is NOT correct. see above.

Plausible: The PRT parameters would rise if the RHR suction, Discharge, CHG pump Reliefs lifted. (plausibility of this answer choice demonstrated 2007 NRC exam-see statistics)

D. Incorrect 1) See A.1.
2) See C.2.

Plausibility of this answer choice is demonstrated due to statistics for Both A and C demonstrate that both halves of this answer are plausible.

1. UOP1.2/1.3-62510B01 009/HLT//C/A 3.1/3.4/007K5.02//FIX REQ//
OBJECTIVE TIE is wrong-- NOT SRO--suggest MOVE to CVCS-40301F07

The crew is forming a pressurizer steam space (drawing a bubble) per UOP-1.1, Startup of Unit from Cold Shutdown to Hot Standby. The vacuum refill procedure will **NOT** be performed.

- Unit 1 is in Mode 5 maintaining 325-375 psig.
- 1B RCP is running.
- A Train RHR is on service with low pressure letdown aligned.
- RCS is in solid plant pressure control with pressurizer temperature at 178°F.
- All PRZR heaters have been energized.

Which ONE of the following correctly describes the condition that will indicate when the pressurizer is at saturation conditions (ie. a bubble is ready to be formed) IAW UOP-1.1; and the effect on PRT level during this evolution?

A. • Letdown flow decreases;
   • PRT level will remain constant.

B.✓ • RCS Pressure will increase;
   • PRT level will remain constant.

C. • RCS Pressure will increase;
   • PRT level will rise.

D. • Letdown flow decreases;
   • PRT level will rise.

12. 008A3.06 012/NEW/BRUNO SUGGESTED/C/A 2.5/2.5/008A3.06/N/2/FIX 2.7/HIGH MISS

Unit 1 has experienced a spurious SI. The following conditions exist:

- EEP-0.0, Reactor Trip Or Safety Injection, is in progress.
- An LOSP on the A Train has occurred.
- A Train is the ON-SERVICE Train.
- 1B Spent Fuel Pool Cooling Pump (SFPC) has just been started per EEP-0.0 Attachment 2, Automatic Actions Verification.
- 1B SFPC Pump resulted in an 81 kW Rise on the 1-2A DG loading.

Subsequently, the 1C CCW pump has TRIPPED on an Overcurrent condition.

Which one of the following completes the statement below?

The 1B CCW pump _(1)_ automatically start.

The kW loading of a CCW pump will/would be _(2)_ the 1B SFPC Pump.

	(1)	(2)
A.	WILL	approximately EQUAL TO
B.	will NOT	approximately EQUAL TO
C.	WILL	GREATER than
D.	will NOT	GREATER than

The CCW FSD (A181000,v24.0) paragraph 3.1.5.2 states.

During normal plant operation, with all pumps operational, **if the operating pump power supply breaker trips,** the standby pump shall automatically start and supply CCW to the CCW heat exchanger in operation. [...]

Paragraph 3.1.5.4 discusses the impact of an SIAS (train A/B) with offsite power available. Under this condition, The ESF sequencer actuation will only start a CCW pump in a train in which there is NO pump running. If however offsite power, were not available, the **A train ESF/LOSP sequencer** would start the dedicated 1C CCW pump.

THE STBY pump auto START LOGIC is NOT blocked even though a LOSP/SI has occurred.

FROM ECP-0.0 ATTACHMENT 6 (unit 2 is Attach 7), the KW loading of a SFPC pump is 81 KW, and a CCW pump is 282 Kw.

Distractor Analysis:

A. Incorrect. 1) see C.2
2) The SFPC pump is a 81 KW load while the CCW pump is 282 KW load. The CCW pump is larger.

Plausible: Without knowledge of the relative HP sizing of the CCW pump vs the SFPC pump one might assume that these pump are of equal size.

B. Incorrect. 1) Ref. D177183.
2) See A.2

Plausible: Since some autostart features of ESF equipment are disabled following LOSP sequencer actuation (AFW LO-Level Auto start), to protect the DG from a potential overload.

C. Correct. See above.

D. Incorrect. 1) See B.1
2) See above

Plausible: Incorrectly assuming that the CCW pump STBY pump feature is disabled as is the AFW LO LVL Auto-start feature during a LOSP sequencer operation, but properly assessing the relative KW sizing of the CCW pump would result in this answer choice.

K/A: **008A3.06** Component Cooling Water System (CCWS): **Ability to monitor automatic operation of the CCWS**, including: **Typical CCW pump operating conditions, including vibration and sound levels and motor current**

Importance Rating:	2.5	2.5

Technical Reference:
A181000,V24.0
FNP-1-ECP-0.0,v25
ARP-.1.1,v52.1 window AA3
D177183
D177185

References provided: None

Learning Objective: RELATE AND IDENTIFY the operational characteristics including design features, capacities and protective interlocks for the components associated with the CCW System, to include the components found on Figure 2, Component Cooling Water System, Figure 3, Secondary Heat Exchanger Header, and Figure 5, RCP-CCW & SW System (OPS-40204A02).

Question History: NEW -- Developed for ILT35 NRC (verbally suggested by chief examiner during sample plan reviews)

K/A match: This Question matches the KA by way of **Requiring the examinee to identify the conditions** which would explain the **AUTOMATIC OPERATION** of the CCW pump, AND **a motor current with relative comparison of another load.** FNP has No normal MCB indications for Motor Temps,vibrations or Motor Currents however, when operating loaded, the DG KW load is a parameter that is monitored from the MCB.

SRO justification: N/A.

13. 008AK3.04 013/MOD/FNP-NO NRC/MEM 4.1/4.6/APE008AK3.04/N/2/FIX 2.21/EDITORIAL

A vapor space LOCA has occurred on Unit 2 and operators have transitioned to EEP-1.0, Loss of Reactor or Secondary Coolant.

Which one of the following statements indicates the reason for tripping the RCPs upon satisfying the EEP-1.0 Foldout Page's RCP Trip Criteria?

A. To limit RCS heat input to within the capacity of one train of ESF systems.

B. To protect from overheating the RCPs motor bearings and RCP seal package.

C. To prevent damage to the RCP impeller from excessive pump cavitation.

D. To minimize the Peak Cladding Temperature experienced if the RCPs were lost later in an event.

A. Incorrect. Stopping a RCP would remove a heat source within the RCS, however, As long as Safety Injection is available it will provide sufficient cooling for the core.

Plausible: This is the reason the RCPs are stopped immediately after initial attempts to start AFW are made within FRP-H.1.

B. incorrect Upon losing support conditions this would be a correct response, However, this is neither a consideration of the Foldout page, nor is it a probability for the failure stated. If CTMT pressures reached 27 psig, this would be a reason to stop the pumps, or if other complications resulted in loss of support conditions.

C. Incorrect Two phase flow within the RCS would result in cavitation, though this is NOT the reason for stopping the RCPs per the Foldout page criteria. If the pumps were cavitating sufficiently, then RCP vibrations would be high which would require immediate shutdown of the RCP.

D. Correct. Per the EXEC Volume Generic Issues discussion, continued operation of the RCPs results in more inventory loss and an overall lower PCT. However, since the RCPs cannot be guaranteed to remain in service, a poorly timed loss//trip of the RCPs, because of that increase inventory loss, result in HIGHER PCTs. See Figure below:

Figure 2. EFFECT OF PUMP TRIP TIME ON PEAK CLADDING TEMPERATURE FOR WESTINGHOUSE 3-LOOP PLANT (PREPARED FROM TABLE 3.2-1 OF WCAP-9584)

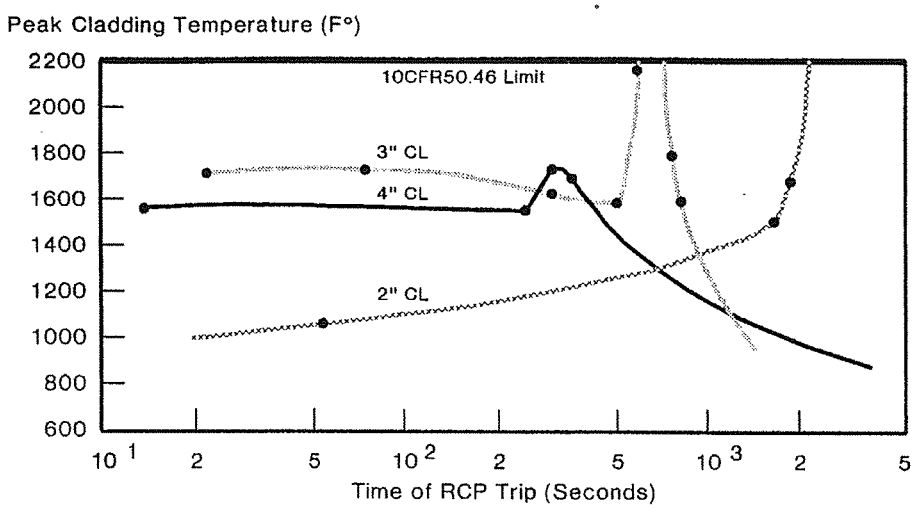

K/A: **008AK3.04 Pressurizer (PZR) Vapor Space Accident**—Knowledge of the reasons for the **RCP tripping requirements** as they apply to the Pressurizer Vapor Space Accident:

Importance Rating:	4.2 4.6
Technical Reference:	FNP-0-EEB-1.0,v3.0 WOG Executive Volume
References provided:	None
Learning Objective:	STATE AND EXPLAIN the basis for all Cautions, Notes, and Actions associated with EEP-1, Loss of Reactor or Secondary Coolant. (OPS-52530B03)
Question History:	modified FNP BANK (EEP-1-52530B03 018) (changed distractors B& C for plausibility concerns)
K/A match:	This particular KA is addressing the basis of the basis for RCP trip criteria, in which case the basis is unaffected by the accident itself, though this particular accident is a small break LOCA by definition thus is directly related to the bases itself.
SRO justification:	N/A

14. 008K3.03 014/MOD/FNP-NO NRC/MEM 4.1/4.2/008K3.03/N/2/MAJOR MOD-V3/REPLACEMENT

Unit 1 is in Mode 1 when a rupture of the 1A RCP Thermal Barrier occurs.

Which one of the following completes the statements below?

HV-3184, CCW DISCH RCP TRM BARR ISO, will automatically close at __(1)__ .
The RCP DESIGN __(2)__ require an immediate shutdown of the Reactor and RCP for this failure.

	(1)	(2)
A.	160 psig	does NOT
B.	160 psig	DOES
C.	75 psig	does NOT
D.	75 psig	DOES

Ref. B175968, Unit 1 setpoint index, D175002 sh.2

Nominal setpoints for valves to go closed
HV3184 - hi pressure on PS-3184A, B or C, **75 psig pressure at process pipe**
HV3045 - hi flow on FIS-3045 of **160 gpm**

When HV-3184 actuates, LB3 alarms. Per ARP-3.1, LB3 step 5 NOTE:
Proper RCP Seal Injection Water flow and Seal Injection Water temperature should provide adequate cooling for the RCP's Seals and Lower Bearings. ***The RCP and seals are designed for continued operation under this condition.*** However, CCW should be restored as quickly as possible to mitigate the risk of a loss of all seal cooling condition.

A181000, CCW FSD states that the **thermal barrier supply check valves** and HV-3045/HV-3184 together isolate the CCWS piping upstream of the RCPS from any pressure propagation to the low pressure piping in the event of a thermal barrier rupture. (sections 3.8.1 & 3.14.1.1)

Distractor Analysis:

A. Incorrect 1) This pressure is far above that which causes closure.

Plausible: Flow isolation setpoint is 160 gpm; Additionally, CCW pump design pressure is 150 psig, therefore it is reasonable to assume that the isolation would occur at a value < 110% of design. (150 × 1.1 = 165 psig).

B. Incorrect. 1) See A.1
2) The CCW system is rated for 150 psig **with the exception of the thermal barrier supply and return lines** & the RCP seal cooling provided by seal injection alone is sufficient for continuous operation.

Plausible: IF the RCP #1 seal had failed or both #1 and #2 seals were degraded a shutdown would be required per AOP-4.1.
Further, there may be urgency in shutdown since the remainder of the CCW system IS ONLY designed for 150 psig, which is NOT sufficient. without knowledge of the suction check valves, one may believe that CCW surge tank level will continue, and although the relief valve is sized for up to a 300 gpm Thermal barrier leak, the discharge of that relief goes to the Floor Drain System.

C. Correct. See above references.

D. Incorrect 1) See above.
2) See B.2

Plausible: This answer combination would be selected upon proper setpoint recall but a misconception on ALL of the design features of the CCW system or operation of the RCP seals.

K/A: 008K3.03 **Component Cooling Water System** (CCWS)—**Knowledge of the effect** that a loss or malfunction of the CCWS will have **on the RCP**.

Importance Rating:	4.1 4.2
Technical Reference:	A181000, v24 FNP-1-ARP-1.1, v52.1, AB4 FNP-1-ARP-3.1, V31.0, LB3 FNP-1-AOP-1.0, v20 B175968, Unit 1 setpoint index D175002 sh.2
References provided:	None
Learning Objective:	Other than Relief Valves, LIST AND EXPLAIN the features that prevent Overpressurization of the CCW system if a thermal barrier heat exchanger tube ruptures. (Including setpoints if applicable.) (OPS-52102G05)
Question History:	NEW/MOD FNP Bank (CCW-52102G05 005)- incorporated impact on RCP to address KA.
K/A match:	LOSS/MALFUNCTION of CCW to Thermal Barriers and its impact on the continued OPERATION of the RCP is directly challenged. NOTE: CCW is heavily SAMPLED; VERIFY no overlap with the following: WE09EG2.4.20, 003G2.1.23, 003K6.02, 008A3.06, 008A2.01
SRO justification:	N/A

15. 009EK2.03 015/FNP BANK/CRYSTAL RIVER 2007/C/A 3.0/3.3/EPE009EK2.03/N/2/HBF/GTO/

Unit 1 has tripped due to an RCS leak of approximately 150 gpm. The following conditions exist:

- ESP-1.2, Post LOCA Cooldown and Depressurization, is in progress.
- RCS temperature trend is as follows:

TIME:	0900	0930	1000 (now)
RCS Cold Leg Avg Temp:	535°F	480°F	440°F

Which one of the following completes the statements below per ESP-1.2?

The cooldown rate is _(1)_ allowable limits. _(2)_ the cooldown.

	(1)	(2)
A.	greater than	HHSI/break cooling ALONE is sufficient to accomplish
B.	greater than	Steam Dumps will be used to control
C.	within	HHSI/break cooling ALONE is sufficient to accomplish
D✓	within	Steam Dumps will be used to control

actual

ESP-1.2, v24.0, step 9.2 requires the RCS cold leg cooldown rate is maintained **"LESS THAN 100°F in ANY 60 minute period".** The cooldown rate is 95°F per 60 minutes, which is less than the 100°F per 60 minute limit.

A. Incorrect. 1) IF the first half hour cooldown rate had been continued (55°F in 30 minutes) the cooldown rate would have been excessive at 110°F per 60 minutes.

2) Under some conditions, RCS Cooldown may be excessive due to HHSI flow, requiring a wait prior to commencing cooldown due to >100°F in the past 60 minutes prior to the operator induced cooldown. However, this would apply only to larger breaks, it is important to note that under these circumstances, that as pressure is reduced, the break flow decay, in which the cooldown rate would also decay.

Plausible: if one applied the 100°F / hour rate and believed that the leak was the only component providing cooling, then this would be chosen

B. Incorrect. 1) See A.1
2) See D.2

Plausible: this answer would be chosen if one were to mis-apply the cooldown restriction as discussed in A.1 and recognize that a leak of 150 gpm is likely not going to provide sufficient decay heat removal.

C. Incorrect. 1) See above, the cooldown between 0900 and 1000 has been <100°F in last 60 mins. The challenge would next come in recognizing that the cooldown between 1000 and 1030 can not be 50°F otherwise the cooldown would exceed the cooldown limitations between 0930 and 1030.

2) See A.2

Plausible: this would be chosen if one were to correctly assess the cooldown rate but mis-understand the capability of the heat removal capacity of a 150gpm leak and/or the decay heat generated post trip.

D. Correct. 1) The cooldown rate is less than the 100°F per 60 minute limit.

2) With a LOCA of 150 gpm, some HHSI/break cooling would occur, but SG heat removal would still be required at this break size; further knowledge of the major mitigative strategy of ESP-1.2 would allow one to recognize that even if break flow were sufficient initially, the depressurization process/strategy would reduce its effectiveness, eventually requiring STM dumps or Atmospheric Relief Valve operation.

K/A: **009EK2.03** Knowledge of the **interrelations between the Small Break LOCA and the SGs**

Importance Rating:	3.0	3.3
Technical Reference:	FNP-1-ESP-1.2,v24.0	
References provided:	None	
Learning Objective:	ANALYZE plant conditions and DETERMINE the successful completion of any step in ESP-1.2, Post LOCA Cooldown and Depressurization. (OPS-52531F07)	
Question History:	FNP BANK (ESP-1.2-52531F07 006) modified but does not qualify for "significantly modified"; used Crystal River 2007	
K/A match:	ADDED "Tripped" to ensure there was a power history; decay heat generation, to alleviate any challenges to there being insufficient data provided. This question was previewed by the Chief Examiner; and PT2 was modified as suggested. Stem was also modified as requested by the Chief Examiner to address the perceived "CUE" issue; and improve plausibility of choices A & C.	
SRO justification:	N/A	

16. 010A4.03 016/FNP BANK/FNP 2007/C/A 4.0/3.8/010A4.03/N/2/HBF/GTO/

Unit 1 is at 100% power. The following conditions exist:

- PT-445, PRZR PRESS, fails **HIGH**.

Which one of the following completes the statement below?

_(1)_ will open and _(2)_ automatically close when RCS pressure drops below 2000 psig.

	(1)	(2)
A.	PCV-444B, PRZR PORV	will
B.	PCV-444B, PRZR PORV	will NOT
C.	PCV-445A, PRZR PORV	will NOT
D.	PCV-445A, PRZR PORV	will

PT-445 failure provides a direct input into PCV-445A and IF pressure is greater than the setpoint of 2335 psig it opens to lower pressure if IN AUTOMATIC control. (AOP-100, section 1.1, Figure 1)

When in AUTOMATIC control PCV-445A & 444B are interlocked with P-11 (<2000 psig) such that the valve will not 'automatically' open. P-11 inputs are 2/3 "PROTECTION" Channels.

Therefore, the PT-445 malfunction provides an input to PCV-445A control to cause it to open, actual RCS pressure will fall as sensed by PT-455/456/457 which then will provide the P-11 interlock.

A . Incorrect 1) Channel 444 controls this PORV.

Plausible: under normal control conditions if pressure were truly rising then PCV-444B will open first due to the PK-444A, proportional/integral controller.

2) See D.2

B. Incorrect 1) See A.1
2) P-11 will close the valve when ACTUAL RCS pressure as indicated on the 2/3 protection channels.

Plausible: IF one mis-understood the inputs to P-11 as 1/2 of the control channels or if they were unaware of the P-11 interlock function, this answer would be chosen.

C. Incorrect 1) See above.
2) See B.2

D. Correct see above.

K/A: 010A4.03 Pressurizer Pressure Control System (PZR PCS)—Ability to manually operate and/or monitor the ***PORV and block valves*** in the control room

Importance Rating:	4.0 3.8
Technical Reference:	FNP-1-AOP-100, v11.0
References provided:	None
Learning Objective:	SELECT AND ASSESS the instrument/equipment response expected when performing Pressurizer Pressure and Level Control System evolutions including the fail condition, alarms, and trip setpoints, to include those items in Table 1, Instrumentation and Control (OPS-52201H08).
Question History:	FNP Bank (PZR PRS/LVL-52201H08 005); FNP 2007 NRC; INEL 2001 NRC
K/A match:	Monitoring proper operation of the PORV interlock at P-11 and following a failure, in both cases operator action is required; 1) to close upon identifying malfunction 2) to identify failure of SSPS if P-11 failed to close the valves automatically if pressure were to fall that low.
SRO justification:	N/A

17. 011EA2.08 017/FNP BANK/VOGTLE 2005/C/A 3.4/3.9/EPE011EA2.08/N/3/HBF/GTO/

The plant staff is recovering from a Large Break LOCA. The following conditions exist:

- The LB LOCA occurred 5 hours ago.
- ESP-1.3, Transfer to Cold Leg Recirculation, was completed 4.5 hours ago.
- Conditions are stable.
- EEP-1.0, Loss of Reactor Or Secondary Coolant, is in progress.

Which one of the following completes the statement below which **describes the time requirement** to enter ESP-1.4, Transfer to Simultaneous Cold and Hot Leg Recirculation, **and the reason**?

Enter ESP-1.4 _____ **from now** in order to _____ .

	TIME	REASON
A.	3 hours	flush high concentration boric acid in the reactor vessel out the break and back to the sump
B✓	2.5 hours	flush high concentration boric acid in the reactor vessel out the break and back to the sump
C.	3 hours	refill the reactor vessel and the downcomer region
D.	2.5 hours	refill the reactor vessel and the downcomer region

EEP-1 rev 30 step 20 [CA] states that entry into ESP-1.4 is **required 7.5 hours after the start of the event.**

EEB-1.0, v3.0 step 20 basis states, "The time established by this analysis would preclude boron precipitation from the boric acid solution which could potentially hinder core cooling." Additionally, since Cold leg Recirculation flow is CTMT sump water, which in turn is water exiting the RCS Break, as boron plating occurs, dilution of the SI RECIRCULATION is simultaneously occurring (water boils leaving boron behind). Therefore altering RECIRC flow or aligning simultaneous Hot leg and Cold leg injection would reduce the plating factor and return the boron to solution, improving core cooling and maintaining downcomer/sump boron concentration stable.

ANSWER / DISTRACTOR ANALYSIS

A. Incorrect. 1) EEP-1 Step 20 states that simultaneous recirc is to be conducted at **7.5 hours after the "START of the EVENT".** This is often confused with the start of RECIRCULATION, or the 8 HOUR CTMT Spray requirement of step 8.3 which requires CTMT Spray recirculation for 8 hrs.

Misconception 1: (Begininng of RECIRC) 7.5 hrs - 4.5 hrs = 3 hrs
Common ERROR 2: (8 hours from EVENT) 8.0 hrs - 5 hrs = 3 hrs

Plausible: Either of the time errors identified above with proper recall of the reason would allow this answer choice to be selected.

2) See Above.

B. Correct. 1) per step 20 of EEP -1, Simultaneous Cold and Hot Leg Recirculation is implemented 7.5 hrs from initiating event:

CALCULATION: 7.5 hrs - 5 hrs = 2.5 hrs.

2) See above.

C. Incorrect. 1) See A.1
2) Plausible: This answer may be selected if one was not aware of the boron plating issue. Simultaneous Hot and Cold leg recirculation does in fact initiate flow via the hot leg directly into the outlet plenum while maintaining flow into the downcomer region. However, this flowpath will not "REFILL" the reactor vessel any more than it is already full, it merely will reverse the flow through some portions of the core as the steam/water moves out the break location.

This is the reason for the design capacity for the accumulators. Two accumulators provide sufficient water to fill the lower plenum and downcomer up to the **Lower Core Plate**.

D. Incorrect 1) See B.1
2) See C.2

K/A: **011EA2.08 Large Break LOCA**— Ability to determine or interpret ***Conditions necessary for recovery when accident reaches stable conditions***, as they apply to a Large Break LOCA.

Importance Rating:	3.4 3.9
Technical Reference:	FNP-0-EEB-1.0,v3.0 FNP-1-EEP-1.0,v30
References provided:	None
Learning Objective:	EVALUATE plant conditions and DETERMINE if entry into (1) ESP-1.3, Transfer to Cold Leg Recirculation; or (2) ESP-1.4, Transfer to Simultaneous Cold Leg and Hot Leg Recirculation is required. (OPS-52531G02) STATE AND EXPLAIN the basis for all Cautions, Notes, and Actions associated with (1) ESP-1.3, Transfer to Cold Leg Recirculation; (2) ESP-1.4, Transfer to Simultaneous Cold Leg and Hot Leg Recirculation. (OPS-52531G03)
Question History:	FNP BANK (ESP-1.3/.4-52531G03 005); Vogtle 2005 NRC exam.
K/A match:	The plant is stable, several hours after a LBLOCA. The crew has a condition on time that they must meet in order to go to HL Recirc. **The question was downgraded from SRO level as used on Vogtle 2005 NRC because** the conditions addresses **major mitigative strategy** and entry level knowledge.
SRO justification:	N/A

1. ESP-1.3/.4-52531G03 005/HLT//C/A (LEVEL 2/3) PROC/EPE011EA2.08////

The plant staff is recovering from a large break LOCA that occurred 5 hours ago. The crew exited ESP-1.3, Transfer to Cold Leg Recirculation, 4.5 hours ago.

The control room staff is evaluating conditions for entry into ESP-1.4, Transfer to Simultaneous Cold and Hot Leg Recirculation, IAW EEP-1, Loss of Reactor or Secondary Coolant. Conditions are stable.

Which ONE of the following correctly describes time requirement to enter ESP-1.4 and the reason for placing the RCS on simultaneous Cold and Hot Leg recirculation,?

Enter ESP-1.4 in _____ .

A. 3 hours to flush high concentration boric acid in the reactor vessel out the break and back to the sump

B✓ 2.5 hours to flush high concentration boric acid in the reactor vessel out the break and back to the sump

C. 3 hours to refill the reactor vessel and the downcomer region

D. 2.5 hours to refill the reactor vessel and the downcomer region

BANK quesiton--format modified only.

18. 011K2.01 018/FNP BANK/FNP 2008/MEM 3.1/3.2/011K2.01/N/2/HBF/GTO/

Unit 2 is in Mode 4 with the following conditions:

- A Train is the ON-SERVICE Train.
- Both Trains of RHR are in service in a shutdown cooling alignment.

Following a 2G 4160 volt bus fault, the bus is de-energized and remains de-energized for trouble shooting and repairs.

Which one of the following lists ONLY ECCS pumps which are DE-ENERGIZED due to the fault?

	Charging Pump	RHR Pump
A.	2B	2A
B.	2B	2B
C.	2C	2A
D.	2C	2B

EEP-0, v39 Attachment 11 or D177032, sh 001, v19.0 describes the Bus 1**G Load Shedding (same as for 2G)** as follows for the listed components:

- Chg pump 2C and 2B (if aligned to B train)
- 1A RHR/LHSI pump

Distractor Analysis:

A. Incorrect 1) 1B Chg pump is a Swing component, but would be aligned to the ON-SERVICE train (1F bus), **it will NOT De-energize**.
2) 2A RHR pump is an A train component and will remain energized (1F bus).

Plausible: AT FNP the for the CCW&SFP system the labeling of components is c**ounter-intuitive with the TRAIN** designation/alignment. This is a HU factoring issue that is often confused with other systems.

B. Incorrect 1) see A.1
2) see D.2

Plausible: this answer choice would be selected if the Chg pump train alignment were confused but the RHR pump alignment were NOT.

C. Incorrect 1) See above.
2) See A.2

Plausible: At FNP the SFP cooling (another critical system with only 2 pumps) component identification is reversed with regard to the train to which it is assigned. This is a HU factoring issue that is frequently confused.

D. Incorrect see above.

KA: 011K2.01 Pressurizer Level Control: Knowledge of **bus power supplies** to the following: **Charging Pumps**

Importance Rating:	3.1 3.2
Technical Reference:	FNP-2-EEP-0.0,v39.0 D177032, sh 019, v19.0
Proposed provided:	None
Learning Objective:	**NAME AND IDENTIFY** the Bus power supplies, for those electrical components associated with the Chemical and Volume Control System, to include those items in Table 3- POWER SUPPLIES (OPS-40301F04) **NAME AND IDENTIFY** the Bus power supplies, for those electrical components associated with the Emergency Core Cooling System, to include those items in Table 4- Power Supplies (OPS-40302C04). **NAME AND IDENTIFY** the Bus power supplies, for those electrical components associated with the Residual Heat Removal System, to include those items in Table 3- Power Supplies (OPS-40301K04).
Question History:	FNP Bank (LO/INT VOLT-40102B06 001); **FNP2008 NRC for KA 013K2.01; Modified stem** to remove NOT statement, and formatted answer in columns. Added RHR status, to ensure "de-energized" is wrong for opposite RHR pump. Also (LO/INT VOLT-40102B06 013) **2007 NRC under KA 062K2.01.**
K/A match:	KA match: Requires knowledge of 2C/2B chg pumps; B charging pump is a swing chg pump and would be aligned to the "IN-SERVICE" Train.
SRO:	N/A

1. LO/INT VOLT-40102B06 001/HLT/SOCT//C/A 3.1/3.2/011K2.01//REPEAT9/SOCT/013K2.01
LO/INT VOLT-40102B06 013 duplicate.
Given the following conditions on Unit 2:

- "A" Train is the "On Service" train.
- 2B CCW pump is running and supplying loads in the on-service train.
- 2A CCW pump is running to support charging pump operations.
- 2A Charging Pump breaker has been racked out for maintenance.

2G 4160 volt bus has just been lost due to a fault. There is no power on the 2G 4160 volt bus at this time.

Which one of the following states the ECCS pumps that will **NOT** have power due to the fault based on current conditions?

A. 2B Charging Pump, 2A RHR Pump.

B. 2B Charging Pump, 2B RHR Pump.

C. 2C Charging Pump, 2A RHR Pump.

D. 2C Charging Pump, 2B RHR Pump.

19. 012K1.06 019/NEW/N/A/C/A 3.1/3.1/012A1.06/N/2/MAJOR MOD-V2/HIGH MISS

Unit 2 is operating at 38% power. The following conditions exist:

- Throttle Valve (TV) #3 has just stuck OPEN.

Subsequently, a malfunction occurs within the Main Turbine Lube Oil system causing:

- KH2, TURB BRG OIL PRESS LO, alarm.
- PI-4019, TURB BRG OIL PRESS, indicates 4 psig.

Which one of the following completes the statements below?

An automatic Reactor trip __(1)__ occur because __(2)__ .

	(1)	(2)
A.	WILL	Auto-Stop Oil Header low oil pressure will input to RPS
B.	WILL	the RPS coincidence of 3 of 4 Throttle Valves is met
C.	will NOT	the RPS coincidence of 4 of 4 Throttle Valves is NOT met
D.	will NOT	a Reactor Trip is NOT required for these conditions

The Low OIL pressure Turbine trip **(6 psig)** is on the MECHANICAL TRIP BLOCK on the front standard of the Main Turbine. This will result in a DEPRESSURIZATION of the AST Oil header to < 45 psig. This is sensed by 2 of 3 pressure switches which input to the RPS.

From EEP-0, Symptoms B.15 (and FSAR 15.2.7.1), the Rx Trip from Turbine Trip input is derived from either:

- AST Oil pressure <45 psig **OR**
- 4 of 4 TV Closed indication.

However, for the RX Trip to be initiated from a Turbine trip, P-9 must be satisfied: > 35% power on 2 of 4 NI power.

Distractor Analysis:

A. Correct — See above. There are **two inputs into RPS** signaling a turbine trip has occurred, 4 of 4 Throttle Valve Closed Position Indications **AND 2/3 AST solenoids < 45 psig; The AST header will** be depressurized by the MECHANICAL trip block when bearing oil pressure falls below 6 psig. The setpoint for RPS **RX trip following a turbine trip is >35% power (P-9)**.

B. Incorrect — See A.
Plausible: The AST oil header (and thrust bearing oil header) is pressurized directly from the Main Oil pump discharge (~55 psig), where the Main bearing oil pressure is NORMALLY much lower due to orifices (~8 psig). IF one thought that the AST header does NOT get depressurized when Bearing oil pressure falls (ie from a leak) and that the trip is initiated via solenoids vs the trip block, then one could believe that the AST header low pressure (45 psig) would not actuate. This error coupled with observed simulator training where the TV remained open, could lead one to believe that the coincidence was 3 of 4 for TV closed.

C. Incorrect — See A. There are 2 inputs into RPS.

Plausible: Since EEP-0 Immediate Operator Actions ONLY check TV positions, the AST header pressure inputs are often forgotten or overlooked. IF this mistake is made, and the individual noted only the TV closure as an input, then they may believe the RX trip signal would not be generated.

D. Incorrect — See A. Low bearing Oil pressure Turbine trip is 6 psig (4 psig < 6 psig); P-9 setpoint is 35% thus a Turbine trip does require a RX trip.

Plausible: This answer combination would be selected if the error in recalling the Turbine trip LOW OIL PRESSURE TRIP setpoint, or the P-9 setpoint, since at a lower power level this would be a correct answer. Alternatively, if oil pressure were > 6 psig, this would be a correct answer.

K/A: **012K1.06 Reactor Protection System**—Knowledge of the physical connections and/or **cause effect relationships between the RPS and the** ***T/G*** *system.*

Importance Rating:	3.1 3.1
Technical Reference:	FNP-2-EEP-0.0,v39.0 FNP-0-SOP-0.3, v46.0 FNP-2-ARP-1.10,v70.0
References provided:	None
Learning Objective:	**DEFINE AND EVALUATE** the operational implications of abnormal plant or equipment conditions associated with the operation of the Reactor Protection System (RPS) components and equipment to include the following (OPS-52201I09)
Question History:	NEW
K/A match:	Oil malfunction added **ONLY to create distractors** which are plausible. KA Match: physical connections is accomplished since the examinee must have knowledge of the Turbine TRIP inputs to the RPS logic; P-9 knowledge is incorporated within the question as well. The cause effect relationship is accomplished via the TG trip input and the resultant RPS impact (RX trip).
SRO justification:	N/A

20. 012K6.06 020/NEW/N/A/C/A 2.7/2.8/012K6.06/N/3/FIX 2.7/

Unit 2 is performing a Startup. The following conditions exist:

- Reactor Power is 6%.
- RCS Tavg is 554°F.
- Steam dumps are in STM PRESS Mode and in Automatic.
- PT-447, TURB FIRST STG PRESS, fails HIGH.

Which one of the following describes the impact of PT-447 failure?

A. The Source Range detector High Voltage circuit will be automatically BLOCKED; FA3, SR LOSS OF DET VOLTAGE, clears.

B. The Pressurizer High Level Rx Trip will automatically UNBLOCK.

C. The Steam Dumps will automatically CLOSE.

D. AMSAC actuation circuit will ARM.

WHILE operating below P-7, a failure of PT-447 in the HIGH direction would actuate P-13 (1/2 coincidence > 10% turb power). P-13 provides input to P-7 (1/2 inputs -- P-10 or P-13).

Since P-7 is satisfied, the following Rx trips are enabled (UNBLOCKED):

- Low Rx Coolant flow.
- RCP pump UV trip (recent mod from bkr trip)
- RCP bus U.V. trip
- RCP Bus U.F. Trip
- PZR Low Pressure trip
- **PZR high level trip**

A. Incorrect P-13/P-7 does NOT impact the SR detector blocking capability. That feature is actuated by P-10.

Plausible: P-7 vs P-10 functions are commonly confused.

B. Correct P-13 (1/2 > 10% turbine load) will cause P-7 to re-instate the Rx trips listed above.

C. Incorrect Steam dump operation is only affected by PT-446/447 while in TAVG mode. When Operating in STM pressure mode, only **P-12 (Lo-Lo Tavg)** and PT-464 would result in this automatic response.

Plausible: PT-447 does affect STM dump operation while in TAVG mode; IF in Tavg mode, the C-7A arming would result in a cooldown to occur due to PT-446 demonstrating a 547 Tref; IF <543°F, then P-12 would close the stm dumps by generating a MANUAL + ZERO output for PK-464.

D. Incorrect PT-447 does not input to the AMSAC circuit. Instead a separate pressure transmitter PT-2447 provides that input. These detectors are related in that they measure the same parameter, and share a common supply but AMSAC is not impacted by this malfunction.

Plausible: AMSAC is armed by C-20, which requires PT-2446 AND PT-2447 (2/2) > 40% turbine power.

K/A: **012K6.06** **Reactor Protection System (RPS)**—Knowledge of the effect of a loss or malfunction of the **Sensors and detectors** will have on the RPS.

Importance Rating: 2.7 2.8

Technical Reference: FNP-0-SOP-0.3,v46.0
FNP-2-AOP-100, v11.0

References provided: None

Learning Objective: RELATE AND IDENTIFY the operational characteristics including design features, capacities and protective interlocks for the following components associated with the TAVG, DT, and PIMP System (OPS-52201J02)

DEFINE AND EVALUATE the operational implications of abnormal plant or equipment conditions associated with the operation of the T_{AVG}, DT, and P_{IMP} System components and equipment to include the following (OPS-52201J07)

Question History: NEW

K/A match: KA met since knowledge of RPS permissive functions impacted (re-instated prematurely) due to transmitter malfunction (PT-447).

SRO justification: N/A

21. 013K2.01 021/MOD/FNP-NO NRC/MEM 3.6/3.8/013K2.01/N/2/HBF/GTO/

Which one of the following describes the power supply(ies) for the B1F ESF/LOSP Sequencer?

A. Either 120V Regulated AC Panel 1C OR 120V Vital AC Panel 1A (balanced between both, if available).

B. Either 125V DC Bus 1A (normal) OR 125V DC Bus 2A (alternate).

C. 120V Vital AC Panel 1A ONLY.

D. 125V DC Bus 1A ONLY.

A. Incorrect This describes the power supplies to the 7300 Process & Instrumentation Control (PIC) Cabinets. These two AC power supplies supply two individual power supply drawers in each of the four per train PIC cabinets the load is balanced equally as between the two sources if both are available.

Plausible: These two components are co-related and may be incorrectly assumed to be powered similarly.

B. Incorrect This describes the power supplies for the 1-2A and 1C DG control power circuits; the 125V DC Bus 1A and 2A supply power to diesel generator control panels 1C and 1-2A through separate power seeking automatic transfer switches (ATSs), normally aligned to UNIT 1 A Train DC.

Plausible: The DG and sequencer are co-related and one may incorrectly assume that the sequencer is powered similarly.

C. Incorrect 120V Vital AC is required for SSPS MASTER and SLAVE relay operation, a Loss of Vital AC bus 1A would prevent an OUTPUT from A train SSPS, and may cause the ESS sequencer to NOT start the DG or ESS loads. The LOSP portion of the sequencer would remain unaffected in this circumstance.

Plausible: This power supply is maintained following a Loss of AC power via the 125V DC battery and VITAL AC Bus Inverters, and supplies slave relays of B train SSPS. These two components (SSPS and Sequencer) are co-related and may be incorrectly assumed to be powered similarly.

D. Correct ALL sequencers are powered from 125V DC distribution panels which are TRAIN and UNIT specific.

K/A: **013K2.01 Engineered Safety Features Actuation System** (ESFAS)—Knowledge of bus power supplies to the following: ESFAS/safeguards equipment control

Importance Rating:	3.6	3.8
Technical Reference:	FSD 181005, v41.0 A506250 v68.0 D175653 sh1, v22.0 D177650 sh1,v15.0	
References provided:	None	
Learning Objective:	NAME AND IDENTIFY the Bus power supplies, for those electrical components associated with the Diesel Generator and Auxiliaries System, to include those items in Table 7, Power Supplies (OPS-40102C04)	
Question History:	MOD FNP Bank (DG SEQ-40102D04 008); modified for plausibility. (similar to McGuire 2010)	
K/A match:	KA match: knowledge of the power supply to the ESF/LOSP sequencer itself is required. The ESF/LOSP sequence provides control over ESF equipment.	
SRO justification:	N/A	

SYS013 K2.01 - Engineered Safety Features Actuation System (ESFAS)
Knowledge of bus power supplies to the following: (CFR: 41.7)
ESFAS/safeguards equipment control .....

Given the following conditions on Unit 1:

- A Small-Break LOCA has occurred
- The crew has reached the step in E-1 (Loss of Reactor or Secondary Coolant) to reset SI and the Sequencers
- The crew is unable to reset the Sequencers

Which ONE (1) of the following describes the locations where Operators must be dispatched to de-energize BOTH Sequencers?

A. 1EVDA ; 1EVDB

B. 1EVDA ; 1EVDD

C. 1EVDB ; 1EVDC

D. 1EVDC ; 1EVDD

---

1. DG SEQ-40102D04 008/HLT//M (LEVEL 1) SYS/064K2.03////
The power supply for the B2G diesel sequencer is:

A. Unit 2 B train 120V Vital AC

B✓ Unit 2 B train 125V DC

C. Unit 2 A train 125V DC

D. Unit 2 A train 120V Vital AC

Implausible to have a B train component powered from an A train component. --- train alignment is basic lvl 1 (non-discriminatory for this system).
Modify to test delta between SEQ vs SSPS vs 7300 cabinets vs DG power supplies.
thus type and specific source options.
AC = 2 (7300 2 parralleled (Converted to DC); single SSPS 120V AC X2 (Slave vs master)
DC = 2 (A train swing DG have two available DC power supplies via AST.)

22. 014A2.04 022/MOD/FNP-NO NRC/C/A 3.4/3.9/014A2.04/N/3/FIX 2.21/EDITORIAL

Unit 1 is at 14% power. The following conditions exist:

- All Control Bank D (CB D) rods indicate 180 steps by DRPI and Group Step counters.

A **14 second rod** withdrawal is performed and CB D rod H-2 did **NOT** move.

The SM reports that repairs will take several hours to complete.

Which one of the following completes the statements below?

Rod H-2 will be misaligned by _(1)_.

AOP-19.0 _(2)_ permit inserting CB D to match the position of rod H-2 while waiting to complete the repairs.

	(1)	(2)
A.	11 or 12 steps	does NOT
B.	14 or 15 steps	does NOT
C.	11 or 12 steps	DOES
D.	14 or 15 steps	DOES

PRIOR TO REPAIRS of an IMMOVEABLE ROD, AOP-19 step 18 actually directs determination of MOVEABILTY, if the crew has not already assessed this. Additionally, RNO step 19.1, directs moving the misaligned BANK to recover alignment as close to the misaligned rod as possible and then adjusting turbine load or boron concentration as necessary.

Misalignment: < C-5 (15% turbine power) requires Manual rod motion;
Manual rod speed is 48 steps/m × (1/60 m/sec) × 14 sec = 11.2 steps.
[Range 11-12 steps]

NMP-OS-001 concern: Because the BANK will be moving IN, to match the misaligned ROD (NEG Rx) there is NO restrictions imposed due to Reactivity Management Guidelines.

Distractor Analysis:

A Incorrect 1) See misalignment above.
2) See above, STEP 18 and 19 RNO actions direct rod repositioning.

PLAUSIBLE: STEP 19 A/ER directs ATTACHMENT 2 which requires the malfunction to be corrected before recovering the MISPOSITIONED ROD alignment (ie if it were moveable AND cause corrected).

B Incorrect. 1) See above.
2) See B.2

Plausible: **Shutdown bank rod speed** (*62 spm* × 14 sec × 1 min/60sec) = 14.47 steps (Range 14 to 15 steps)

C Correct. 1) See above; Rod speed of Control Banks, while in Manual is 48 steps per min.
2) per Step 19 RNO actions would direct inserting CB D to match the misaligned rod's height. **This strategy is also stated within** T.S. 3.1.4 basis.

D Incorrect. 1) See B.1
2) See C.2

Plausible: See B plausibility for ROD SPEED error. This answer choice would be selected if one were familiar with procedure strategy but **improperly recalled the MANUAL rod speed for a Control bank.**

K/A: 014A2.04 Rod Position Indication System—**Ability to (a) predict the impacts of** Misaligned rod **on the RPIS; and (b) based on those on those predictions, use procedures to correct, control, or mitigate the consequences of** Misaligned rod.

Importance Rating:	3.4 3.9
Technical Reference:	AOP-19.0, ver 29.0.
References to be provided:	None
Learning Objective:	OPS-52201E03; Relate and Identify the operational characteristics including design features, capacities, and protective interlocks associated with the Rod Control System. LIST AND DESCRIBE the sequence of major actions associated with AOP-19, Malfunction of Rod Control System. (OPS-52520S04)
Question origin:	MODIFIED FNP BANK (AOP-19.0-52520S04 006); **Altered pt 2 to LOWER LOD-- HISTORICAL performance shows the BANK was/is OVERLY difficult**--(10% success); changed to avoid MINUTIA (LOD 5) for MEMORY level testing.
K/A match:	a) PREDICT impact= rod speed calculation and the resultant misalignment. b) USE PROCEURE: AOP-19 allowance for rod motion under given conditions.
SRO justification:	N/A; *Major mitigative strategy*

1. AOP-19.0-52520S04 006/HLT//C/A 3.4/3.9/014A2.04////
The following plant conditions exist on Unit 1:

- A reactor startup is being performed per UOP-1.2, Startup of Unit From Hot Standby to Minimum Load.
- The reactor is subcritical.
- All Control Bank D (CB D) rod heights indicated by DRPI and group step counters are at 18 steps.

A failure occurs on CB D rod H-2 CRDM such that its lift coil does not energize. Repairs will take several hours to correct.

Then, a **14 second rod** withdrawal is performed.

Which one of the following states the expected amount of misalignment and the required recovery actions per AOP-19, Malfunction of Rod Control System?

The misalignment between DRPI and group step counters will be _(1)_ steps. AOP-19 will direct the operator to _(2)_.

	(1)	(2)
A.	11 steps	correct the malfunction, then withdraw only the misaligned rod to match the bank position.
B.	14 steps	correct the malfunction, then withdraw only the misaligned rod to match the bank position.
C✓	11 steps	Insert CB D in Manual to 18 steps, then correct the malfunction.
D.	14 steps	Insert CB D in Manual to 18 steps, then correct the malfunction.

Historical performance on this question shows a 10% success rate; LOD too high--this question has proven to be NON-discriminatory for memory level exam?!

ALTER part 2 to LOWER the quantity of knowledge incorporated; Target allowance of movement vs sequence of events + process.

23. 017K5.02 023/NEW/N/A/C/A 3.7/4.0/017K5.02/N/2/MAJOR MOD-V1/

A Unit 2 cooldown and depressurization is in progress in accordance with ESP-1.2, Post LOCA Cooldown And Depressurization. The following conditions exist:

- Both trains of Subcooled Margin Monitoring have failed.
- Containment Pressure peaked at 13 psig, but is now 6 psig.
- 1B RCP is running.
- PRZR level is 50%.
- RCS LOOP WR PRESSURE instruments indicate as follows:
  - — PT-402 855 psig
  - — PT-403 952 psig

- RCS temperature indications are as follows:

TR-0413, RCS HOT LEG TEMP (1B LOOP)	TRAIN A CETC MONITOR (TMAX mode)
493°F	508°F

Which one of the following completes the statements below?

RCS sub-cooling is (1) .

SI REINITIATION (2) required per the FOLDOUT PAGE of ESP-1.2.

	(1)	(2)
A.	20°F	is NOT
B.	20°F	IS
C.	35°F	is NOT
D.	35°F	IS

SMM uses **highest core exit temp** (excluding Upper Head T/Cs) **and lowest pressure, (while in its NORMAL display mode: CETC)**. A second mode of operation (RTD mode) calculates subcooling using the **hottest RCS RTD (Th or Tc) and the lowest pressure.**

Pressure inputs:

a. Channel A - PT-455 or Channel B - PT-457
b. PT-402 - feeds each channel
c. PT-403 - feeds each channel

SOP-68.0, v8 step 4.6.1 NOTE describes the two modes of operation of the CETC MONITOR:

- The **TMAX mode** of operation continuously displays the **maximum thermocouple temperature** in the associated channel.

- The **CET mode** of operation allows selection of one of three sub-modes for display of individual core exit or upper head thermocouple temperatures.

ESP-1.2 foldout page, for SI re-initiation is subcooling **≤16 {45} °F** as indicated by SCMM while in the CETC mode. IF the SCMM were available, it evaluates subcooling bases on the 5th HOTTEST, since in these plant conditions the operator must calculate subcooling.

WOG EXEC volume SI ACTUATION/RE-INITIATION Criteria subcooling should be based on **Core Exit TCs.** While in the TMAX mode of operation, the UPPER HEAD Thermocouples are included; the 1B RCP will provides sufficient flow to keep head temperatures representative of CET temperatures. IF RCS hot leg temperature was used this would/could lead to RCS voiding and challenge CORE COOLING.

Distractor Analysis:

A. Incorrect 1) See B.1
2) **ADVERSE values are applicable > 4 psig.**

Plausible: IF Adverse numbers were not applicable then only 16°F subcooling would be required.

B. Correct 1) Subcooling can be calculated by performing the following:
- LOWEST RCS pressure = 855 psig
  - convert this value to PSIA by adding (14.7 psia) = 869.7 psia.
  - from the steam tables T_{SAT} = ~528°F
- HIGHEST RCS temp = 508°F

Therefore subcooling is ~ (528-508)°F = 20 °F.

2) Since adverse numbers are applicable 20°F < 45°F required. SI RE-INITIATION is required.

C. Incorrect 1) SEE A.1, T_{HOT} is NOT representative of the HOTTEST location of the RCS when a RCP is running. CETC MONITOR, with a RCP running would be indicating the HOTTEST Core Exit temperature. This value is that obtained if 508°F is used for RCS temp in lieu of the CETC temp. AS follows:
- T_{SAT} =~ 528°F - 493°F = 35°F

Plausible: IF a RCP were not running then the CETC monitor value would likely be indicative of the RX VESSEL head temperature rather than hottest Core Exit temperatures.

ALSO: **using 952 psig** results:

Highest RCS pressure = 952 psig
- convert this value to PSIA by adding (14.7 psia) = 967 psia.
- from the steam tables T_{SAT} = ~542°F

542 - 508 = 34°F

Plausible: IF a Simple memory/selection error regarding USE of **HIGHEST** Temp and **PRESSURE**. Then this answer would be selected.

2) see A.2

D. Incorrect 1) See C.1
2) See B.2

K/A:**017K5.02 In-Core Temperature Monitor System (ITM)**—Knowledge of the operational implications of the following concepts as they apply to the ITM system: Saturation and subcooling of water

Importance Rating:	3.7 4.0
Technical Reference:	FNP-1-SOP-68.0 v8.0 FNP-1-ESP-1.2 v24.0 WOG EXEC Volume REV 2,
References to be provided:	None
Learning Objective:	**DEFINE AND EVALUATE** the operational implications of abnormal plant or equipment conditions associated with the operation of the Inadequate Core Cooling Monitor System components and equipment to include the following (OPS-52202E09) **ANALYZE** plant conditions and DETERMINE if actuation or reset of any Engineered Safety Features Actuation Signal (ESFAS) is necessary. (OPS-52531F05)
Question origin:	NEW; NO bank for this KA addressed "operational implication", but only "Calculation".
K/A match:	ASSESS operation of the ICTS- select the appropriate CETC value to assess subcooling. This knowledge of the ICTS system must be used against the SI RE-INITIATION CRITERIA (operational implication is recognizing/calculating when SI must be Re-initiated).
SRO justification:	N/A; *Foldout page criteria/major mitigative strategy.*

24. 022AG2.4.34 024/NEW/N/A/C/A 4.4/4.0/APE022AG2.4.34/N/3/FIX 2.7/

The Control Room has been evacuated due to a fire. The following conditions exist:

- AOP-28.2, Fire in the Control Room, is in progress.
- FCV-122, CHG FLOW, has failed closed.
- PRZR level is 16% and ↓.

Which one of the following completes the statements below?

Letdown _(1)_ automatically isolate if PRZR level continues to fall;

The operator _(2)_ from the HSDP.

	(1)	(2)
A.	will NOT	must close HV-8149A/B/C, LTDN ORIF ISO, valves
B.	will NOT	must close LCV-459 & LCV460, LTDN LINE ISO, valves
C✓	WILL	will NOT be capable of restoring letdown
D.	WILL	WILL be capable of restoring letdown

Per AOP-28.2,v28.0, step 14.6 NOTE states:

Isolation of letdown due to low pressurizer level 15% will unnecessarily complicate plant recovery **(LCV 459 & 460 cannot be re-opened from the HSDP,** Reactor head vents must then be used for removing mass from the primary system). Therefore, emphasis should be placed on controlling charging flow to establish a stable or slowly rising pressurizer level that compensates for any effect on level due to cooldown.

Letdown orifices

Step 21 has HV8149A, B and C placed in LOCAL control. There interlock features are defeated when in LOCAL control. LCV-459 and 460 can not be shifted to local control. PZR low level (15%) will result in normal isolation of 459/460. The interlock with 8149A/B/C and LCV-459/460 is also disabled when letdown orifaces are in local control.

ATTACHMENT 6, LOCAL CONTROL OF LETDOWN, is used to establish "local control of LCV459/460". This is done in the 139' EPR and NOT at the HSDP.

A. incorrect 1) As directed in step 14.6 NOTE.
2) STEP 14.6-NOTE alerts the operator of the complication to recovery/control efforts if PZR level falls below 15%. LCV-459/460 can not be re-opened from the HSDP, this would prevent the ability to restore letdown from the HSDP.

B. Incorrect 1) See A.1
2) NOT capable of being closed from the HSDP. Plausible, these valves are those which would automatically close.

C. Correct See above

D. Incorrect 1) see above
2) see above; Plausible: if LCV-459/LCV460 controll were also available at the HSDP this would be the action required. AOP-28.2 does provide guidance for "local" operation of LCV-459/460 and LOCAL is often the term to refer to HSDP control.

K/A: **022AG2.4.34 Loss of Reactor Coolant Makeup-** *Knowledge of RO tasks performed outside the main control room during an emergency and the resultant operational effects.*

Importance Rating:	4.2 4.1
Technical Reference:	FNP-1-AOP-28.2, v28.0
References provided:	None
Learning Objective:	STATE AND EXPLAIN the operational implications for all Cautions, Notes, and Actions associated with AOP-28.0, Control Room Inaccessibility. (OPS-52521B03) SELECT AND ASSESS the following instrument/equipment response expected when performing Hot Shutdown Panels System evolutions including the fail condition, alarms, trip setpoints, as applicable, to include those items in Table 2, HSP Controls (OPS-52202D06): [...] Effects on equipment that is placed in LOCAL control
Question History:	NEW
K/A match:	Tasks outside Control room = Operation of HSD panel OPERATIONAL effects= LETDOWN control/operation if Charging flow contol (RX MAKEUP Control) is improper or lost when operating from the HSD panel.
SRO justification:	

25. 022K3.02 025/MOD/VC SUMMER 2006/MEM 3.0/3.3/022K3.02/N/2/HBF/GTO/

Unit 1 is operating at 100% power. The following conditions exist:

- The Containment Cooling system was aligned to provide maximum cooling.
- The 1A Containment cooler tripped.
- Containment temperature has increased from 119°F to 126°F.

Which one of the following completes the statements below?

Pressurizer Level will indicate _(1)_ than actual.

Containment Air Temperature _(2)_ within the limits of TS 3.6.5, Containment Air Temperature.

	(1)	(2)
A.	higher	is NOT
B.	lower	is NOT
C.	higher	IS
D.	lower	IS

The increase Cnmt temperatures will cause the reference leg water to expand, become less dense, and the differential pressure will lower. This occurs even with a sealed reference leg. The lower differential pressure results in indicated LEVEL HIGHER than ACTUAL level. This explains **why the adverse numbers for PZR levels are HIGHER for the ERG's where LOW pressurizer level is the concern;** conversely the adverse levels are LOWER where HIGH pressurizer levels are the concern.

TS 3.6.5 requires Containment air temp to remain ≤ 120°F while in modes 1 through 4.

A. Correct See discussion above.

B. Incorrect 1) Differential pressure would go down, therefore one may incorrectly correlate this with indicated level going down. This would be true if the reference leg as NOT FILLED.
2) See above.

C. Incorrect 1) See above.
2) Per TS basis, the DBA assumes Containment temperature is 127°F, and the Design MAX air temperature for containment is 327°F following a DBA. Recalling either of these temperatures instead of the TS limit of 120°F limit would allow for this answer to be selected.

D Incorrect 1) See B.1
2) See C.2

REFERENCES:

1. SENSORS AND DETECTORS, OPS-31701G
2. PRESSURIZER, OPS-52101E OPS-40301E

K/A: 022K3.02 Containment Cooling System—Knowledge of the **effect that a loss or malfunction of the CCS** will have on the following: **Containment instrumentation readings**

Importance Rating:	3.0 3.3
Technical Reference:	OPS-52201H, ver 1. TS 3.6.5
References provided:	None
Learning Objective:	SELECT AND ASSESS the instrument/equipment response expected when performing Pressurizer Pressure and Level Control System evolutions including the fail condition, alarms, and trip setpoints, to include those items in Table 1, Instrumentation and Control (OPS-52201H08).
Question History:	MODIFIED FNP Bank (PZR PRS/LVL-52201H08 030); VC Summer 2006-- Changed PT two from fundamental to RO level of knowledge regarding TS compliance per direction of CE
K/A match:	The loss of cooling has a direct impact on the sealed reference leg temp, thus causing a deviation in the ACTUAL vs INDICATED level.
SRO justification:	N/A

QUESTIONS REPORT
for VC SUMMER Jan 2006 RO Exam

The Unit is operating at 100% power. A failure of a Reactor Building Cooling Unit occurred while the system was aligned to provide maximum cooling. Containment temperature has increased from 119 ^{o}F to 126 ^{o}F.

Which ONE of the following describes how Pressurizer level indication changes due to this increase in Containment temperature and why?

A. Level indicates higher than actual due reference leg density decreasing.

B. Level indicates lower than actual due to reference leg density decreasing.

C. Level indicates higher than actual due to reference leg density increasing.

D. Level indicates lower than actual due to reference leg density increasing.

This is a SAT question **assuming that there is NOT** an inordinate amount of FUNDAMENTAL knowledge on the exam per NUREG 1021 Appenidix B, C.1.d; the paragraph refers to limits of ES-401, which other than 40-50% limit on mem/fund; unable to find an alternate defined limit in ES-401.

Modified this bank question based on Chief Examiners guidance regarding Fundamental knowledge--"shall INCLUDE station specific knowledge."

Adjusted PT 2 of this question to challenge Plant specific knowledge relating to the loss of CNMT Cooling sys. (TS)

26. 024AA1.06 026/MOD/FNP 2007/MEM 4.0/4.7/APE024AA1.06/N/2/FIX 2.23/CLAY REVEIW

Unit 1 is in a Refueling Outage with fuel being loaded into the core.

Which one of the following completes the statement below?

The **MINIMUM** temperature that must be ~~met to maintain~~ the Boric Acid Storage Tanks (BAT) FUNCTIONAL IAW Technical Requirements Manual is ____ .
The Location of 1A and 1B BAT temperature instruments are on the ____.

	Temperature	Location
A.	35°F	121' near the boric acid batching station
B.	35°F	100' in the BAT room
C.	65°F	121' near the boric acid batching station
D.	65°F	100' in the BAT room

STP-3.2, v17.0 step 4.3 requires checking TIS-107/109. Step 4.5 verifies locally using a portable temperature probe various ROOM temperatures for FLOWPATH operability.

D175039 sheet 3, v17 identifies that only TIS-107/109 as the Temp instruments for the BAT and they are located in the BAT 100' BAT room, ref D175147, v33.0

MCB annunciators DJ4 and DJ5, DK4 and DK5 provide alarm functions at HIGH (125°F) and LOW (70°F) BAT temps and provide the following guidance:

"Determine actual tank temperature as indicated by TIS-107[109], **locally at the tank.**"

Distractor Analysis:

A. Incorrect, 1) 35°F is too low of a temperature for the BAT. because of the elevated Boron concentrations 7000-7700 ppm a temperature below 65°F would allow for precipitation/solidification of the BORON.

Plausible: TRS 13.1.6.1 Verify **RWST solution temperature is ≥ 35°F;**

2) **see above. Plausible:** There is a temperature element located here which automatically controls the steam admission valve for the **Batching tank** and displays the batching tank temp. **ALSO, ACCESS to the BAT Room is Via the 121'** elevation and one then must climb down to the 100' elevation to read the gauge face.

B. Incorrect, 1) See A.1,
2) see above.

C. Incorrect, 1) See D.1
2) See A.2

D. Correct 1) Plant is in Mode 6. The following TRSs apply. TRS 13.1.6.4 Verify boric acid storage tank solution temperature is > or equal to 65°F

2) see above.

K/A: **024AA1.06** **Emergency Boration**—Ability to operate and / or **monitor the BWST temperature** as they apply to Emergency Boration.

Importance Rating: 3.2 3.1

Technical Reference: TR 13.1.6
FNP-1-STP-3.1, v20.0
FNP-1-STP-3.2, v17.0
FNP-1-ARP-1.4, v52.1
D175147 sh 001, v33

References provided: None

Learning Objective: RECALL AND APPLY the LCO and APPLICABILITY for Technical Specifications (TS) or TRM requirements, and the REQUIRED ACTIONS for 1 HR or less TS or TRM requirements, and the relevant portions of BASES that DEFINE the OPERABILITY and APPLICABILITY of the LCO associated with the Boric Acid System components and attendant equipment alignment, to include the following (OPS-52101I01):

- 13.1.6, Borated Water Source - Shutdown
- 13.1.7, Borated Water Sources – Operating.

Question History: MOD FNP Bank; (BORIC ACID-52101I01 002) ; 2007 NRC exam under G2.2.22 **modified PT 2 to address location of temp** instrument.

K/A match: This question requires knowledge of FNP's BAT (BWST equivalent) TEMP requirements to remain Functional and location of the instrument from which to acquire the necessary data.

SRO justification: n/a

1. BORIC ACID-52101I01 002/HLT//MEM 4.0/4.7/G2.2.22/13.1.6.4, .6///004K4.10
Unit 1 is in a Refueling Outage with fuel being loaded into the core.

Which one of the following describes the MINIMUM temperature and the MINIMUM borated water volume that must be met to maintain an operable Boric Acid Storage Tank (BAT Tank) IAW Tech Specs?

	Solution Temperature	Borated Water Volume
A.	35°F	2,000 gal.
B.	35°F	11,336 gal.
C.	65°F	2,000 gal.
D.	65°F	11,336 gal.

27. 025AK3.02 027/MOD/SEQUOYAH 2010/MEM 3.3/3.7/025AK3.02/N/2/FIX 2.1/

Which one of the following describes the LOWEST pressure that will cause an automatic closure of MOV-8701A, 1C RCS LOOP TO 1A RHR PUMP, and the reason for that interlock?

	Pressure	Reason
A.	450 psig	Prevent overfilling and overpressurization (125% of design) of the PRT.
B.	450 psig	Prevents overpressurization (125% of design) of the RHR system.
C.	700 psig	Prevent overfilling and overpressurization (125% of design) of the PRT.
D✓	700 psig	Prevents overpressurization (125% of design) of the RHR system.

From SR 3.4.14.2 and FSD 181002,v43.0 all RHR LOOP suction Valves (MOV-8701A&B and MOV-8702A & B) will close when RCS pressure reaches 700 psig. The range required by SR 3.4.14.2 is 700-750 psig.

NOTE: Due to apparent contradiction within FSD 181002 3.4.6.2 and SR 3.4.14.2 basis discussion the "(125% of design)" was ADDED to fortify against dispute of question.

The basis for the SR states:

"Verifying that the RHR auto closure interlock is OPERABLE ensures that RCS pressure **will not pressurize the RHR system beyond 125% of its design pressure of 600 psig**. The auto closure interlock isolates he RHR System from the RCS when the interlock setpoint is reached." (B3.4.14-7)

The RHR suction Relief valves are also used for LTOP (TS 3.4.12), the setpoint for these suction relief valves is 450 psig. Should RCS pressure rise to > 450 psig, both RHR suction relief valves would open and begin filling the PRT. IF pressure were to rise further to > 600 psig and RHR system were still aligned then the RHR discharge Relief valves would also open and also discharge to the PRT.

Distracotor Analysis:

A. Incorrect 1) 450 psig is the setpoint for the suction relief (LTOP relief) valves. The MCB alarm HG5, SOLID RCS PRESS HI, alarm actuates at 425 psig.

2) PRT overfill/overpressurization is a potential should the LTOP relief valve operated, and Annunciator response procedure directs monitoring PRT level if the relief valves have lifted.

Plausible: This answer would be selected is one were to recall the LTOP

RELIEF valve setpoint and mistaken that value for the automatic closure signal for the RHR LOOP suction Isolations, and consider the discharge flowpath to the PRT as the potential reason for this interlock. TS bases 3.4.14 does state that one of the concerns for the PIV Operability is **"overpressurization of a low pressure system" (B.3.4.14-2)**

B. Incorrect 1) See A.1
2) See D.2

Plausible: this answer would be selected if the REASON were properly recalled however the setpoint was not.

C. Incorrect 1) See D.1
2) See A.2

Plausible: this answer would be selected if the Pressure setpoint was properly recalled but for protection of the PRT rather than the RHR system. The PRT is important to allow for PORV and Safety valve discharge, however the Rupture discs provide adequate protection from impacting their function due to overfill/overpressure of the PRT.

D. Correct 1) See FSD and TS excerpts noted above
2) See TS basis excerpt above.

Tier 1 Gp 1

K/A: **025AK3.02 Loss of Residual Heat Removal System (RHRS)**—Knowledge of the reasons for the Isolation of RHR low-pressure piping prior to pressure increase above specified level as they apply to the Loss of Residual Heat Removal System.

Importance Rating:	3.3 3.7
Technical Reference:	FNP-1-ARP-1.8, v35.1 FSD-181002,v24 SR 3.4.14.2 and its basis
References provided:	None
Learning Objective:	**RELATE AND IDENTIFY** the operational characteristics including design features, capacities and protective interlocks for the components associated with the Residual Heat Removal System, to include the components found on Figure 2, Residual Heat Removal System (OPS-40301K02).
Question History:	MOD BANK, Sequoyah 2010 (#6)- changed to 2+2; also changed Targeted Automatic operation vs manual.
K/A match:	REASON and SETPOINT Value are both required to correctly answer this question.
SRO justification:	N/A

QUESTIONS REPORT
for 2010 Feb RO exam

025 AK3.02 006

Given the following:

- Unit 1 is in Mode 5 with the PZR solid.
- Train "A" RHR is aligned to provide shutdown cooling.
- An equipment malfunction occurs causing RCS pressure to rise.
- 1A-A RHR pump has just tripped
- It is reported that RCS pressure is 375 psi and rising.

In accordance with AOP-R.03, "RHR System Malfunction," which ONE of the following identifies the RCS pressure at which FCV-74-1 & FCV-74-2 are close and the reason for this action?

Per FNP A&C could be argued correct (range or approximation--before setpoint reached). The question focuses on detailed knowledge of the procedure--- KA requires knowledge of reason.

A. 380 psig, to prevent LTOP from initiating.

B. 410 psig, to ensure RCP #1 seals are not damaged.

C. 450 psig, to prevent inventory loss through the suction relief va

D. 600 psig, to prevent over-pressurization of the PRT.

MODIFIED to 2+2 vs 4 distinct since based on the facility author's opinion, knowledge of the reason is NOT required to answer this question-(considering 3 of the 4 distractors)- ONLY setpoint; vica-versa

DISTRACTOR ANALYSIS:

A. *Incorrect, Plausible since this is the pressure at which actions are di AOP-R.03 to be taken and attempt to control RCS pressure at this value, but this pressure is not the setpoint directed by AOP where RHR is to be isolated.*

B. *Incorrect, This is the pressure setpoint of RHR Pressure Hi alarm, but this pressure is not the pressure where RHR is directed to be isolated. Plausible since this action is in AOP-R.03 but to check for 200 psid.*

C. *Correct, AOP-R.03 states that if RCS pressure cannot be kept below 450 psig then close FCV-74-1 & 74-2. this is to isolate the system due to lifting the suction relief valve which will reduce RCS inventory.*

D. *Incorrect, This is the design pressure of the system, AOP-R.03 directs isolation at 450 psi. Plausible since the RHR suction and discharge relief valves go to PRT.*

28. 026K1.01 028/MOD/FNP 2010/MEM 4.2/4.2/026K1.01/N/3/HBF/GTO/NO-FIX

Which one of the following completes the statements below for Unit 1 following a Large Break LOCA?

The Containment Sump Suctions for the _(1)_ automatically open on a LO-LO RWST condition, if not aligned by the operator.

The 1A RHR and 1A CS pumps _(2)_ share a common suction strainer/flow path when aligned to the Containment sump.

	(1)	(2)
A.	CS Pump (MOV-8826/8827 A/B)	do NOT
B.	CS Pump (MOV-8826/8827 A/B)	DO
C.	RHR Pump (MOV-8811/8812 A/B)	do NOT
D.	RHR Pump (MOV-8811/8812 A/B)	DO

From ARP-1.3, location CH4, RWST LVL A TRN LO-LO, which alarms at 4' 7" the following information can be obtained: "**IF an SI signal is present**, Then ECCS valve switchover occurs." This "switchover" only occurs on the RHR pump suction valves, the CS pump suctions from the CTMT sump do not automatically OPEN and MUST be manually aligned.

Each of the RHR pumps and CS pumps have their individual suction strainer, and suction piping exiting containment; UNLIKE the RWST suction flowpath which is Shared between the LHSI/HHSI and CS pumps. (D175038 sheets 2 & 3)

A. Incorrect 1) CS valves do not roll open automatically. This is only true for RHR sump suction valves.

Plausible: since ESP-1.3 is implemented at 12.5 ft, and RHR suctions are NORMALLY manually aligned by procedure, one may incorrectly reason that the CS sump suctions are those equipped with the "AUTOMATIC" switchover capability.

2) see C.2.

B. Incorrect 1) See A.1
2) See C.2

Plausible: When aligned to the RWST these components share a common suction pipe supply up to the Suction isolation valve.

C. Correct 1) See above.
2) When aligned to the CTMT sump, these components are each equipped with their individual suction strainer.

D. Incorrect 1) See above
2) This would be correct "if aligned to the RWST"; prior to implementing ESP-1.3.

K/A: **026K1.01 Containment Cooling**—Knowledge of the physical connections and/or cause/effect relationships between the CSS and the following: ECCS

Importance Rating:	4.2 4.2
Technical Reference:	FNP-1-ARP-1.3,v28.1 D175038 SH 1 through 3.
References provided:	None
Learning Objective:	LABEL AND ILLUSTRATE the Containment Spray and Cooling System flow paths, to include the components found on Figure 2, Containment Cooling System, Figure 3, Containment Spray System and Figure 4, Service Water to Containment Coolers (OPS-40302D05) RELATE AND IDENTIFY the operational characteristics including design features, capacities and protective interlocks for the components associated with the Residual Heat Removal System, to include the components found on Figure 2, Residual Heat Removal System (OPS-40301K02).
Question History:	MOD from FNP Bank (ECCS-40302C05 012); modification of FNP 2010 exam. -- significant mod (stem change--different answer); AND > 2 changes to distractors. (significant mod vs new since same concept same KA)
K/A match:	**physical connections--** suction flowpath are separate while in RECIRC vs Shared while in INJECTION mode. The sump itself is the "INTERCONNECTION" between the systems. Also, **Cause/Effect relationship,** or the lack thereof, between ECCS and CS is challenged by recognizing the CS is NOT affected by the ECCS automatic switchover signal/interlock.
SRO justification:	N/A

1. ECCS-40302C05 012/HLT//MEM 4.2/4.2/026K1.01////

A Unit 1 Safety Injection is in progress due to a Large Break LOCA.

Which one of the following describes the connection(s) between the RWST, A Train CS and ECCS pumps suction, and the operation of MOV-8827A and MOV-8826A, CTMT SUMP TO 1A CS PUMP valves?

A Train CS Pump, A Train HHSI Pump, and the A Train RHR Pump have

__(1)__ suction header(s) penetrating the RWST, and the CS Sump suction

valves __(2)__ automatically open on a LO-LO RWST condition.

	(1)	(2)
A.	separate	will **NOT**
B.	one common	will
C.	separate	will
D.	one common	will **NOT**

A -. Incorrect. The first part is incorrect, but plausible since most of the safety related equipment has physical train separation for piping. The RWST is designed to minimize tank penetrations, and uses only one penetrations for suctions to all CS pumps, RHR pumps, and CVCS/HHSI pumps. The second part is correct.

B - Incorrect. The first part is correct. The second part is incorrect, but plausible since this would be correct for the RHR sump suctions which have the auto function described.

C - Incorrect. The first part is incorrect (See A). The Second part is incorrect (See B).

D - Correct. The RWST is designed to minimize tank penetrations, and uses only one penetrations for suctions to all CS pumps, RHR pumps, and CVCS/HHSI pumps. The CS Sump suction valves do not have the auto open feature, but the RHR sump suctions do.

Significantly MODIFIED, since this question focuses on the configuration when aligned to the RWST. Further this question only addresses whether or NOT the CS suctions automatically realign.

29. 027AK1.02 029/NEW/N/A/C/A 2.8/3.1/APE027AK1.02/N/2/FIX 2.21/EDITORIAL

Unit 2 is at 100%. The following conditions exist:

- PK-444A, PRZR PRESS REFERENCE controller, AUTO operation has failed.
- AOP-100, Instrument Malfunction, required actions have been completed.
- PK-444A is in manual and controlling RCS pressure at 2235 psig.
- Both PRZR Spray Valve controllers are in Auto.
- All PRZR Backup heaters are in the ON position.

Subsequently, an instantaneous 15% Load Rejection occurs.

Which one of the following completes the statements below?

The load rejection will **initially** cause TI-450, PRZR SRG LINE, temperature to _(1)_.

To control RCS pressure the operator must _(2)_ the OUTPUT on PK-444A.

	(1)	(2)
A.	LOWER	LOWER
B.	LOWER	RAISE
C.	RISE	LOWER
D.	RISE	RAISE

With all Backup heaters on, a constant outsurge will be occuring, Surge line temperatures will approach the saturation temperatures of the PZR (650°F)

A load rejection results in RCS temperature to rise, and an **insurge into the pressurizer.** The insurge into the pressurizer will cause Surge line and LIQUID/VAPOR space temperatures to LOWER towards the Hot Leg temp of 605°F.

PK-444A has been "HUMAN FACTORED" such that the demand reacts similiarly to the desired response of the sensed parameter; In this case, because pressure is "sensed" higher than setpoint the system would attempt to lower the pressure and therefore the demand would need to be "lowered".

Distractor Analysis:

A - Correct. 1) See above. Surge line temperature lowers toward the THOT leg temp of 605.

2) See above, LOWERING the output of PK-444A will OPEN PRZR SPRAYS and reduce the output from the C bank proportional heaters.

B - Incorrect 1) See A.1
2) See D.2

Plausible: PK-444C&D, the spray valve controllers, operate this way. To lower pressure the output must be RAISED thereby opening the spray valves. IF one correctly identified the insurge affect on surge line temperatures but confused the operation of PK-444A with the Spray valve controllers this would be selected.

C - Incorrect 1) Although RCS temperatures are "heating up" the impact on the surge line temperature would be a COOLDOWN.

2) See A.2. PRZR spray valves even when closed, maintain a given Spray flow, this coupled with the PROPORTIONAL heater operation, ensures that there is a constant outsurge from the pressurizer under steady state conditions. Therefore, when a steady RCS pressure is established, PRZR surge line temperatures will be higher than THOT temperatures.

Plausible: If one incorrectly identified an OUTSURGE or thought that the surge line temperature was NORMALLY equal to THOT, then a HEATUP would be true.

D - Incorrect 1) See C.1
2) see B.2

Plausible: this would be correct for an OUTSURGE from the PZR.

K/A: **027AK1.02 Pressurizer Pressure Control System Malfunction**—Knowledge of the *operational implications of the Expansion of liquids as temperature increases* as they apply to Pressurizer Pressure Control Malfunctions: (CFR 41.8 / 41.10 / 45.3)

Importance Rating:	2.8 3.1
Technical Reference:	Steam Tables
References provided:	None
Learning Objective:	DEFINE AND EVALUATE the operational implications of abnormal plant or equipment conditions associated with the operation of the Pressurizer Pressure and Level Control System components and equipment to include the following (OPS-52201H07): • Normal Control Methods • Abnormal and Emergency Control Methods • Automatic actuation including setpoint, if applicable • Protective Interlocks.
Question History:	NEW though PT 2 is similiar to; **NEW vs modified** since failure is different/event is different/targeted indication different/response is reversed. see references for review of FNP 2010 NRC; (BANK #:PZR PRS/LVL-52201H07 001)
K/A match:	Satisfied since a temperature increase is caused by the malfunction of the stem, and the examinee must assess the impact that temperature change has on PZR liquid density.
SRO justification:	N/A

1. PZR PRS/LVL-52201H07 001/HLT//C/A 2.8/3.1/APE027AK1.02////

Unit 2 is at 50% power, and PT-444, PRZR PRESS, pressure transmitter has failed to the **2230 psig** position.

Which one of the following describes the effects on PK-444A, PRZR PRESS REFERENCE controller, and the pressurizer liquid density due to this malfunction?

PK-444A controller demand goes __(1)__,

and

the density of the pressurizer liquid goes __(2)__.

	(1)	(2)
A.	down	up
B.	down	down
C.	up	up
D.	up	down

This question was used during 2010 NRC exam and has 1/2 similiar portion.

It was originally randomly selected; though re-written due to author review/discussions to better match the KA.

This is provided ONLY to allow THE CE to review the assessment of NEW vs MODIFIED for the generated 027AK1.02 question.

30. 029EK1.03 030/MOD/FNP-NO NRC/MEM 3.6/3.8/EPE029EK1.03/N/2/MAJOR MOD-V1/

Unit 1 has experienced an Anticipated Transient Without a Trip (ATWT).

- FRP-S.1, Response to Nuclear Power Generation/ATWT, is in progress.
- Safety Injection has automatically actuated.
- NO Boric Acid pumps will start.

Which one of the following completes the statements below?

The **minimum** Safety Injection flowrate that will satisfy the emergency boration requirements of FRP-S.1 is _(1)_ .

The reactivity effect of the boration is _(2)_ negative at BOL than at EOL.

	(1)	(2)
A.	30 gpm	MORE
B.	30 gpm	LESS
C.	92 gpm	MORE
D.	92 gpm	LESS

A. Incorrect. 1) Normal boration is always required if available, however; if not available, and manual emergency boration not available, RWST boration is directed at an increased flow rate of 92 gpm vice 30 gpm for emerg borate.
2) DBW becomes more negative over core life. Dilution is more positive at beginning of life, but boration is more negative at end of life.

B. Incorrect. 1) See A.1
2) See A.2

C. Incorrect. 1) See D.1
2) See A.2

D. Correct. 1) Normal boration is always normally aligned when in FRP-S.1 IF available. However per step 4.6 of FRP-S.1 a minimum of 92 gpm is required to satisfy the Emergency Boration requirements.
2) See A.2

K/A: **029EK1.03 Anticipated Transient Without Scram (ATWS)**
—Knowledge of the operational implications of the Effects of boron on reactivity as they apply to the loss of (ATWS).

Importance Rating:	3.6 3.8
Technical Reference:	FRP-S.1, 25.0
References provided:	none
Learning Objective:	ANALYZE plant conditions and DETERMINE the successful completion of any step in (1) FRP-S.1, Response to Nuclear Power Generation/ATWT; (2) FRP-S.2, Response to Loss of Core Shutdown. (OPS-52533A07)
Question History:	MOD FNP Bank (FRP-S-52533A07 003); MODIFIED Part 1 to address FLOW requirements, since the BANK was challenged for JOB LINK/discriminatory value (LOD 5) during validation -- detailed knowledge of procedure;
K/A match:	KA match is accomplished via understanding the relationship of Boron worth with Core life; attempted to match requirements of CE to elevate to Plant specific by including procedural knowledge regarding minimum required flowrates from RWST vs BAT.
SRO justification:	N/A

1. FRP-S-52533A07 003/HLT//C/A 3.6/3.8/EPE029EK1.03////

Unit 1 has experienced an Anticipated Transient Without a Trip (ATWT). FRP-S.1, Response to Nuclear Power Generation/ATWT, immediate operator actions are complete.

- Safety Injection System has automatically actuated.

Which one of the following describes the requirement, if any, for emergency boration in FRP-S.1, and the relative effect of any boration at BOL compared to EOL?

Emergency boration through MOV-8104, EMERG BORATE TO CHG PUMP SUCT, _(1)_ procedurally required to be aligned.

The reactivity effect of any boration would be _(2)_ negative at BOL than at EOL.

	(1)	(2)
A.	is NOT	more
B.	is NOT	less
C.	IS	more
D✓	IS	less

Significant modification since PT 1 changed.
JOB LINK and discriminatory value (LOD 5) challenged

Challenge via validators: The required RO LOK= **Major mitigation strategy is "ADD NEGATIVE Reactivity via Emergency Boration" ; this strategy condition is satisfied therefore requires detailed knowledge of decision points within the procedure vs. major mitigative strategy.**

31. 029G2.2.39 031/NEW/N/A/C/A 3.9/4.5/029G2.2.39/N/2/FIX 2.1/

The following conditions exist on Unit 2:

- CORE ALTERATIONS are in progress.
- CTMT Main Purge is in HIGH speed.
- SFP Ventilation is in service.
- R-24A, CTMT PURGE, radiation monitor failed HIGH.
- The CTMT Main Purge supply valves did not close and will not close when the handswitches are taken to the CLOSE position.

Which one of the following completes the statements below?

CORE ALTERATIONS _(1)_ per TS 3.9.3, Containment Penetrations.

When securing CTMT Main Purge per SOP-12.2, Containment Purge And Pre-Access Filtration System, one AUX BLDG MN EXH FAN is required to be secured to prevent _(2)_ .

	(1)	(2)
A.	MAY continue ~~for one hour~~	an automatic trip of SFP ventilation on low air flow
B.	must be IMMEDIATELY suspended	an automatic trip of SFP ventilation on low air flow
C.	MAY continue ~~for one hour~~	damaging the Aux Bldg exhaust plenum
D.	must be IMMEDIATELY suspended	damaging the Aux Bldg exhaust plenum

TS 3.9.3 item c.2 causes entry into CONDITION A, which REQUIRES Suspension of CORE ALTS AND FUEL MOVEMENT IMMEDIATELY.

The above the line says, "c. **Each penetration providing direct access from the containment atmosphere to the outside atmosphere either:**

1. **closed by a manual or automatic isolation valve**, blind flange, or equivalent, **or**
2. capable of being closed by an OPERABLE Containment Purge and Exhaust Isolation System.

REQUIRED ACTION Statements (RAS)

TS 3.3.6 CONDITION A, one radiation monitoring channel inoperable, allows **4 hours to fix the problem. IF that RAS is not satisfied then**

- SINCE **CORE ALTS: TS 3.3.6 RAS C.1** allows for purge valves to be

closed; **OR RAS C.2** IMPLEMENT 3.9.3.

Because the PURGE supply dampers could not be closed, then TS 3.3.6 RAS C.2 MUST be implemented; **IMMEDIATELY Entering LCO 3.9.3; RAS A.1- IMMEDIATELY suspend Core alts.**

NOTE:
The "OR" condition within TS 3.3.6 RAS simply re-iterates/mimics the TS 3.0.6 "anti-cascading" rule if the function is no longer required (terminate air/air exchange).

SOP-58.0, step 4.1 CAUTION reads:
Both Auxiliary Building Main Exhaust Fans must be and should only be placed in service when main purge is placed in service to prevent an over pressurization or excessive vacuum from being developed inside the exhaust plenum.

SOP-12.2 STEP 4.5 CAUTION
Both Auxiliary Building Main Exhaust Fans must be and should only be placed in service when CTMT main purge is placed in service to **prevent over pressurizing** the exhaust plenum. (NEL 99-0078)

Step 4.5.3 directs "REDUC[ing] the number of Aux Bldg Mn Exh Fans to one."

Distractor Analysis:

A- Incorrect 1) CORE ALTERATIONS are required to be secured immediately.
Plausible: the candidate may believe one hour is allowed to restore equipment to a safe lineup such as if the Rx head were suspended it would take up to an hour to place it in a safe location.

IF IN MODES 1-4; TS 3.3.6 condition B.1 would direct implementation of **TS 3.6.3 CONDITION B which requires 1 hour** to close containment Isolation per RAS B.1, for containment MINI-PURGE valves.

2) This would NOT cause a LOW flow condition within the SFP ventilation system. IN fact, it would cause a HIGH flow condition due to the excessive vacuum on the exhaust plenum.

Plausible: IF a HIGH pressure condition occurred in the exhaust plenum (as it does if ONLY one AUX BLDG MN EXH FAN is in service with Main purge ALSO in service) then a low flow condition may occur due to high backpressure on SFP ventilation which discharges to the Exhaust Plenum; this Low Flow condition would (if it occurred) result in a PRF Auto-start actuation.

REFERENCE: SOP-12.2 STEP 4.4.16 Caution states, "Operation of CTMT main purge in High Speed with only one auxiliary building main exhaust fan available AND SFP ventilation in service will **over pressurize** the exhaust plenum."

B - Incorrect 1) see D.1
2) see A.2

C - Incorrect 1) see A.1
2) see D.2

D - Correct 1) This is the RAS of 3.9.3 condition A.1 to suspend core alts immediately
2) per SOP-12.2 operating with 2 AUX BLDG MN EXH FANs without Main purge will cause a vacuum to be drawn in the Exhaust Plenum, and potentially damaging it.

K/A: 029G2.2.39 **Containment Purge System (CPS)**—Knowledge of less than or equal to one hour Technical Specification action statements for systems.

Importance Rating: 3.9 4.5

Technical Reference: TS 3.3.6 and 3.9.3
FNP-2-SOP-58,v73.0
FNP-2-SOP-12.2,v38.0

References provided: None

Learning Objective: RECALL AND APPLY the LCO and APPLICABILITY for Technical Specifications (TS) or TRM requirements, and the REQUIRED ACTIONS for 1 HR or less TS or TRM requirements, and the relevant portions of BASES that DEFINE the OPERABILITY and APPLICABILITY of the LCO associated with the Containment Ventilation and Purge System components and attendant equipment alignment, to include the following (OPS-52107A01):

- 3.3.6, Containment Purge and Exhaust Isolation Instrumentation
- 3.9.3, Containment Penetrations

RECALL AND DISCUSS the Precautions and Limitations (P&L), Notes and Cautions (applicable to the "Reactor Operator") found in the following procedures (OPS-52107B06):

- SOP-58.0, Auxiliary Building HVAC System
- [...]

RECALL AND DISCUSS the Precautions and Limitations (P&L), Notes and Cautions (applicable to the "Reactor Operator") found in the following procedures (OPS-52107A04).
[...] SOP-12.2, Containment Purge and Pre-Access Filtration System

Question History:	NEW
K/A match:	Knowledge of TS 3.9.3 Condition A.1 RAS (IMMEDIATE). The minimum requirements to restore core alts is all above the line information and required to be known by an RO candidate. Part 2: is NOT **directly linked to the one hour or less TS**, HOWEVER it **IS related to the action REQUIRED by TS 3.3.6 & TS 3.9.3;** Each of these TS actions require that **CNMT PURGE** be secured (isolations closed), and this information is IMPORTANT to the job function and facility operation allowing a discriminatory question to be created. This complies with NUREG 1021 Appendix B C.2.f "distractors may include secondary pieces of information that have lower relateive importance and discriminatory value ~~that~~ than the **key point** of the distractor."
SRO justification:	N/A

32. 032AA2.05 032/BANK/BEAVER VALLEY 2007/C/A 2.9/3.2/APE032AA2.05/N/2/FIX 2.21/EDITORIAL

Unit 2 Reactor startup is in progress. The following conditions exist:

- Intermediate Range power indications are stable at the following values:

NI-35	4×10^{-11} amps
NI-36	7×10^{-11} amps

- The Source Range detectors have NOT been manually blocked.

At this time, the Reactor trips on Source Range HI FLUX.

Which one of the following conditions/actions would have caused the reactor trip?

A. The operator placed the SR channel N-31 HV Manual ON/OFF switch in HV OFF, which caused the bistables to TRIP.

B. SR channel N-31 pulse height discriminator fails, which caused an artificially high indication.

C. IR channel N-35 is overcompensated which caused the trip prior to P-6, I/R Power Escalation Permissive, being satisfied.

D. IR channel N-36 is undercompensated which caused the trip prior to P-6, I/R Power Escalation Permissive, being satisfied.

P-6 is satisfied at 10^{-10} amps. P-6 permits manual blocking of the SR detector High flux trip setpoint and de-energization of the detector's HV power supply thereby protecting the instrument. IF not done manually, at P-10 setpoint (10% power) the system will automatically block the HV circuit to the SR detectors.

ONLY one IR detectors must be > P-6 to permit manual blocking; the conditions of this stem allow this action. and is required per UOP-1.2 step 5.20.

SR instruments utilize a pulse height discriminator to eliminate, or NOT COUNT, the electrical spikes caused by the gamma interactions, thus only counting the larger magnitude current spikes caused from Neutron interactions. If the pulse height discriminator were to fail, then the "COUNTS per SECOND" would dramatically rise and result in a SR HIGH FLUX trip, if not Blocked or bypassed.

Distractor Analysis:

A. Incorrect Placing this switch in OFF will have the OPPOSITE effect. RECENT modification to UNIT 2 (Fall 2011); NOT installed on Unit 1 as of FEB 2012.

B. Correct See Above

C. Incorrect Although an overcompensated channel would demonstrate these indications- LOWER reading than the affected channel. However, this diversity in IR channel indication is NORMAL and the SR detector Trip setpoint is **>** 10^{-10} IR amps (a decade higher).

Plausible: The condition of OVER/UNDER compensated is often confused, and the condition of OVER Compensated IR channel would impact the SR detector operation, by **preventing the satisfaction of P-6** setpoint (2/2 > setpoint).

D. Incorrect An undercompensated channel would demonstrate these indications; HIGHER reading than the non-affected channel. This diversity in IR channel indication is NORMAL. Further, an UNDER compensated condition would allow satisfying P-6 earlier not later. Finally the P-6 setpoint is **>** 10^{-10} IR amps (a decade higher).

Plausible: The condition of OVER/UNDER compensated is often confused, and the condition of UNDER Compensated IR channel does impact the SR detector operation, albeit the prevention of automatic energization below P-6 setpoint.

K/A: 032AA2.05 **Loss of Source Range NI**—Ability to determine and interpret the ***Nature of abnormality, from rapid survey of control room data*** as they apply to the Loss of Source Range Nuclear Instrumentation

Importance Rating:	2.9 3.2
Technical Reference:	UOP-1.2, v102.0 UOP-2.3, v11 SOP-0.3, v46.0
References provided:	none
Learning Objective:	DETERMINE AND IDENTIFY conditions during performance of UOP-1.2, Startup of Unit from Hot Standby to Minimum Load and/or UOP-1.3, Startup of Unit Following an At-Power Reactor Trip that might result in equipment damage or degradation. (OPS-52510B01)
Question History:	BANK; Beaver Valley 2007
K/A match:	KA match is achieved since the examinee must evaluate IR power level and conditions to determine the cause of the REACTOR TRIP.
SRO justification:	N/A

33. 032 AA2.05 001/NEW/HIGHER/RO/BVPS-1/11/2007/NO

Given the following:

- A reactor startup is in progress.
- IR channel N-35 indicates 4 X 10^{-11} amps and stable
- IR channel N-36 indicates 7 X 10^{-11} amps and stable
- The crew is verifying proper overlap and preparing to block Source Range High Flux Trips.
- The reactor then trips on Source Range High Flux.

Which ONE of the following conditions caused the reactor trip?

A. The operator placed SR channel N-31 HV Manual ON/OFF switch in HV OFF.
Unit 1 Farley is not equipped with such a switch, however, the equivalent switch is the SR BLOCK-RESET switch

B. √ SR channel N-31 pulse height discrimination was lost, causing an artificially high indication.

C. IR channel N-35 being overcompensated caused the trip prior to P-6 being satisfied.

D. IR channel N-36 being undercompensated caused the trip prior to P-6 being satisfied.

A. Incorrect. Placing switch in OFF will provide the opposite effect

B. Correct.

C. Incorrect. Both of the Intermediate Range channels indicate correctly, and an overcompensated channel would result in lower indication

D. Incorrect. Both of the Intermediate Range channels indicate correctly, although an undercompensated channel would result in higher indication and would cause a trip if conditions were not stable.

QUESTIONS REPORT
for BEAVER VALLEY 2007 – NRC WORKSHEET REV C

Ability to determine and interpret the following as they apply to the Loss of Source Range Nuclear Instrumentation: Nature of abnormality, from rapid survey of control room data

Question Number: 58

Tier 1 Group 2

Importance Rating: 2.9

Technical Reference: ITS 3.3.3 Function 5
1OM-2.1.B, pg 4

Proposed references to be provided to applicants during examination: None

Learning Objective: 3SQS-2.1 Obj 2

10 CFR Part 55 Content: 41.7

Comments:

Source: NEW
Cognitive Level: HIGHER
Job Position: RO
Date: 11/2007

Source if Bank:
Difficulty:
Plant: BVPS-1
Previous NRC?: NO

33. 033A3.02 033/NEW/N/A/MEM 2.5/2.7/033A3.02/N/3/HBF/GTO/CLAY REVEIW

Unit 1 has completed a core offload and is currently defueled. The following conditions exist:

- **Both SFP Cooling pumps are running** in accordance with SOP-54.0, Appendix 1, OPERATION OF BOTH SFP COOLING TRAINS, to maintain SFP temperatures.
- A failure of the 1A Spent Fuel Pool Cooling (SFPC) Pump Seal occurs.
- The leak rate is 30 gpm.

Which one of the following completes the statements below?

If NO OPERATOR action is taken, the inventory loss will stop due to __(1)__.

AFTER the leak stops the SFP will be filled from the __(2)__.

	(1)	(2)
A.	the uncovering of the suction penetration to BOTH SFPC pumps	RWST
B.	the check valves in the 1A SFPC loop and the siphon breaker	RWST
C.	the uncovering of the suction penetration to BOTH SFPC pumps	Demineralized Water System
D.	the check valves in the 1A SFPC loop and the siphon breaker	Demineralized Water System

SOP-54.0, step 3.13 states:

Parallel operation of SFP Cooling Loops is prohibited to prevent short circuit flow and/or pump damage. **Operation in parallel per Appendix 1** has been evaluated and **is an exception to this rule.** [from appendix 1, this is to permit temperature control following core offload].

The reason for this limitation is that the SFP Cooling system shares a common DISCH flowpath but separate suction flowpaths, and there are **NO check valves** to prevent reverse flow bypassing the pool should one pump trip.

FSD A-181014 section 4.3 states:

[...] The piping is configured to prevent inadvertent draining below elevation 149'-0" . [...] The discharge line has a 1/2 inch hole on the bottom side of a 180° bend, **at elevation 152'-0"**, which acts **as a siphon breaker.** [...] The worst case scenario pipe break would result in the draining of the pool to elevation 140'-6". [...]

SOP-54.0, v64.0, P&L 3.5 states:

"IF the make-up was for reasons other than evaporation, the SFP boron concentration should be checked [...] to ensure boron concentration of 2000 ppm or greater is maintained."

Section 4.9.1 CAUTION identifies that makeup from the RWST is "used to replace SFP inventory lost due to means other than evaporation."

Section 4.9.2 CAUTION identifies that makeup from the DEMIN WATER sytem is "normally used for boron concentration control due to evaporation of the SFP water. **It may be used to makeup for other SFP inventory loss <u>only after the affect on SFP boron concentration has been determined."</u>**

<u>Distractor Analysis:</u>

A. Correct 1) The suction piping is at a lower elevation than the discharge siphon breaker hole therefore level will continue to **lower until both pump suctions (actual is 149' 8")** AND the discharge siphon hole (152') are uncovered; *This is a passive design consideration which will terminate the leak.*

2) SEE SOP-54 Cautions above. Since SFP boron concentration is already at the lower limit of 2000 PPM then any addition of NON-borated water would not be permitted.

B. Incorrect 1) There are NO check valves installed within the SFPC loop, and the discharge siphon is on the common discharge for Both pumps.

Plausible: One may **logically assume that there are check valves** within the system, and with knowledge specific system knowledge regarding elevations of equipment, then this combination of logic and lack of specific system knowledge would result in this answer choice.

2) See A.2

C. Incorrect 1) See A.1 but Plausible; The siphon breaker is at 152', and if the leak occurred in a different location within the system and in a NORMAL configuration then this could be correct.

2) Adding Demin Water is NOT prudent following a LOSS of ~4 ft of SFP water (153' to 149') without sampling and determining the impact on SFP boron concentration.

Plausible: Demineralized water is the NORMAL and PREFERRED makeup source for evaporative losses. Further, SOP-54.0 does permit using the DEMIN water as a makeup source, AFTER evaluation of the impact on Boron concentration.

D. Incorrect - 1) See B.1;
2) See C.2

K/A: 033A3.02 Spent Fuel Pool Cooling: Ability to monitor automatic operation of the SFP cooling system including: Spent fuel leak or rupture

Importance Rating:	2.5 2.7
Technical Reference:	FSD A181014, v 13.0 FNP-1-SOP-54.0, 64.0
References provided:	None
Learning Objective:	RELATE AND IDENTIFY the operational characteristics including design features [...] for the components associated with the Spent Fuel Pool Cooling and Purification [...] (OPS-40305D02) RECALL AND DISCUSS the Precautions and Limitations (P&L), Notes and Cautions (applicable to the "Reactor Operator") found in the following procedures (OPS-52108L06): • SOP-54.0, Spent Fuel Pit Cooling and Purification System
Question History:	NEW.
K/A match:	AUTOMATIC operation -- level drop terminates by design of connection locations. **This is a PASSIVE, but AUTOMATIC response created by the design of the system.** MONITOR-- Knowing what to expect SFP level to lower to and then identifying the makeup source.
SRO justification:	n/a

34. 033AK3.01 034/MOD/DIABLO APR 2007/C/A 3.2/3.6/APE033AK3.01/N/2/FIX 2.7/

Unit 1 startup is in progress. The following conditions exist:

- SR Nuclear Instruments indicate 1500 cps.
- Control Bank C is at 50 steps.
- N-36, Intermediate Range, loses Control Power.

Which one of the following completes the statement below?

The startup is terminated because ____

A. the reactor has automatically tripped.

B. TS 3.3.1, Reactor Trip System (RTS) Instrumentation, requires an IMMEDIATE manual trip for the loss of Both SR detectors; P-6 has de-energized the SR detectors.

C. TS 3.3.1, Reactor Trip System (RTS) Instrumentation, requires an IMMEDIATE suspension of positive reactivity. The crew may hold power/reactivity at current value for repairs for a short period of time.

D. TS 3.3.1, Reactor Trip System (RTS) Instrumentation, requires an IMMEDIATE initiation of a shutdown. The crew will drive all Control Bank rods in.

Distractor Analysis:

A. Correct When the IR loses Control power, The HIGH FLUX Trip (1 of 2) will cause the reactor to trip.

B. Incorrect IR CP failure will result in a HIGH failure, P-6 (2 of 2 below) will AUTOMATICALLY **ENERGIZE** the SR detectors, and 1 of 2 above will allow for **MANUAL de-energization** of the SR detectors.

Plausible: **P-10 will automatically "de-energize"** the SR detectors (P-10 requires 2 of 4 **PR instruments** > 10%). if one were to confuse the inputs and requirements of these permissives a**nd conclude that NO Automatic Rx trip occurred**, but the loss of both SR detectors required implementation of **TS 3.3.1 condition J,** this answer would be selected.

C. Incorrect TS 3.3.1 condition G.1 requires immediate suspension of positive reactivity, IF BOTH detectors were IR detectors became inoperable and **NO reactor trip signal was present/required.**

Plausible: if one confused the Loss of ONE IR detector TS required action (condition F) with that of loss of ALL IR detectors (Condition G) AND did not **consider/recognize the RX trip signal (1 of 2)** would be initiated, then this answer choice would be selected.

D. Incorrect See D;

Plausible :if one did not recognize the RX trip signal, and applied the actions of TS 3.3.1 condition F or G; or recalled the response for terminating a startup per UOP-1.2.

UOP-1.2 step 3.2.15 for achieving criticality prior to +500 pcm position, directs termination of the startup by driving all rods in.

UOP-1.2 step 5.24 NOTE states that if subcritical < POAH, then drive rods in and perform an orderly shutdown.

K/A: **033AK3.01 Loss of Intermediate Range Nuclear Instrumentation**— Knowledge of the ***reasons for Termination of startup, following loss of intermediate range instrumentation.***

Importance Rating:	3.2 3.6
Technical Reference:	TS 3.3.1 Bases
References provided:	None
Learning Objective:	SELECT AND ASSESS the instrument/equipment response expected when performing Excore Nuclear Instrumentation System evolutions including the fail condition, alarms, trip setpoints for the following (OPS-52201D08): — Source Range Detectors. [...]
Question History:	MODIFIED BANK, Diablo Canyon Apr 2007 (changed 3 distractors due to subsetting issues)
K/A match:	**modified from Diablo Canyon's Apr 2007 distractors C&D**; author felt that these two could be eliminated using subset logic. The established subset provided that D could be argued/considered correct based upon the examinee's interpretation of those choices. Also, **Modified distractor B**, to better match the stem--added the TS required response for the implied/stated loss.
SRO justification:	N/A

35. 034K1.01 035/NEW/N/A/MEM 2.5/3.2/034K1.01/N/2/MAJOR MOD-V3/REPLACEMENT

Which one of the following completes the statements below per TR 13.9.3, Manipulator Crane?

The Manipulator Crane's GRIPPER OVERLOAD cut off limit is required to operate at or below _(1)_ .

This GRIPPER OVERLOAD cut off limit provides protection to the _(2)_ from excessive lifting force.

	(1)	(2)
A.	2850 lbs	Core internals
B.	2850 lbs	Manipulator Bridge Structure
C.	1850 lbs	Core internals
D.	1850 lbs	Manipulator Bridge Structure

FHP-5.13 ver 22

1.1.5.9 OVERLOAD [interlock] – An overload occurs when the hoist is being raised and the weight sensed by the load cell reaches a preset limit in the PLC. This is used to sense a fuel assembly getting caught on another fuel assembly in the core or on the basket. The weight setpoint differs depending on the position of the LOAD SELECT switch and the values programmed in the PLC.

FHP-5.13 Step 8.38.1 titles this interlock as "**GRIPPER OVERLOAD"** based on the LIGHT's label.
AKA: Main Hoist Automatic Load cutoff; (lesson plan/Technical manual)

TR 13.9.3 Manipulator Crane requires the overload cut off limit less than or equal to 2850 pounds. the basis provides this justification.

The FUNCTIONALITY requirements for the manipulator cranes ensure that:

1) manipulator cranes will be used for movement of control rods and fuel assemblies,
2) each crane has sufficient load capacity to lift a control rod or fuel assembly, and
3) **the core internals and pressure vessel are protected from excessive lifting force in the event they are inadvertently engaged during lifting operations**

A. Correct 1) SEE TR 13.9.3.
2) See TR 13.9.3 Basis.

B. Incorrect 1) SEE TR 13.9.3.

2) The manipulator bridge structure must exceed the minimum CAPACITY of the crane (3250 lbs.) which is well in excess of the overload limit of 2850 pounds.

C. Incorrect 1) This is the "UNDERLOAD LIMIT POS.3 (SW. 10L)" setpoint per FHP-5.13B Data Sheet 2.

Plausible: a fuel assembly weighs only approx 1550 lbs. **(1570 lbs per P&L 3.1 of FHP-5.13: 1450 assembly + 120 RCCA)**.It would be reasonable to assume that the overload limit would be slightly above this value.

2) See A.2

D. Incorrect 1) See C.1
2) See B.2

K/A: **034K1.01 Fuel Handling Equipment System**—Knowledge of the physical connections and/or cause effect relationships between the fuel handling system and the following systems: RCS

Importance Rating:	2.5	3.2

Technical Reference: FNP-1-FHP-5.13 v22
TR B13.9.2, v9.0
FSAR chapter 9

References provided: None

Learning Objective: RECALL AND APPLY the LCO and APPLICABILITY for Technical Specifications (TS) or TRM requirements, and the REQUIRED ACTIONS for 1 HR or less TS or TRM requirements, and the relevant portions of BASES that DEFINE the OPERABILITY and APPLICABILITY of the LCO associated with the Fuel Storage, Handling and Refueling System components and attendant equipment alignment, to include the following (OPS-52108D01).
• 13.9.3 Manipulator Crane

Question History: NEW

K/A match: This was selected because the TRM bases shows that the Manipulator crane FUNTIONALITY requirements **protect the core internals and the Rx vessel which is part of the RCS**.

SRO justification: N/A

36. 035K3.01 036/NEW/N/A/C/A 4.4/4.6/035K3.01/N/3/FIX 2.23/RETURNED

Unit 1 is in Mode 3 warming up the Main Steam lines using SOP-17.0, Main and Reheat Steam. The following conditions exist:

- RCS Temp is 547°F.
- All MSIV Bypass valves are OPEN.
- All MS BYP WARMUP VLVs (V019A/B/C) are OPEN.
- Steam header pressure and each SG pressures are approximately equal.
- The Steam Dumps are in the STM PRESS Mode of operation.
- PK-464, STM HDR PRESS, controller is in automatic.

Immediately after All MSIVs are opened:

- A Steam Leak is reported in the Turbine Building.
- All SG MSIVs are immediately closed from the MCB.

Which one of the following describes the impact on the RCS?

RCS temperatures will ____ .

A. remain at 547°F

B. lower uncontrollably

C. rise to 552°F and then stabilize at 552°F

D. lower to 543°F, then rise and stabilize at 547°F

UNIT 1 is equipped with Three (3) 1A (1B/1C) MS BYP WARMUP VLV, N1N11V019A (B/C). All Three of these valves are opened and remain open while opening the MSIVs. SOP-17.0 step 4.2.6 NOTE reminds the operator of the MSIV BYP INTERLOCK feature:

When an MSIV is opened, its associated **bypass valve will automatically close**. [...]

STEP 4.3.5 will align "the Steam Dumps lined up for the steam pressure mode of operation".

A - Incorrect The MSIVs and MSIV Bypass valves will BE CLOSED, therefore the Temperature control by the Stm Dumps will shift to the ARVs, These valves are Normally set for an approx SG pressure of 1035 psig.

This value can be calculated as follows:
1035 psig +15 psia = 1050 psia ; from steam tables Tsat is 551°F consider that RCS T_{Cold} will be slightly higher due to heat transfer RCS TAVG will be around 552°F.

Plausible: If one were to NOT consider the shift in SG pressure control and the subsequent impact on RCS temp; IF a flowpath was thought to remain around the MSIVs and the leak smaller than the capacity of the steam dumps (or the bypasses restricting flow to maintain temp at 547F).

B - Incorrect See C.

Plausible: IF The MSIV Bypasses remained OPEN then the cooldown would continue uncontrollably.

The MSIV Bypasses are not operated by the MCB MSIV "TRIP" handswitch. These valves are equipped with their own handswitches.

C - Correct The MSIVs are interlocked such that when the MSIV is OPENED (no longer closed), the bypass valves will close; Subsequent closure of the MSIVs will terminate ALL steam flow down the MS line and RCS temperature to rise to the SG ARV controlled temperature.

This value can be calculated as follows:
1035 psig +15 psia = 1050 psia ; from steam tables Tsat is 551°F consider that RCS T_{Cold} will be slightly higher due to heat transfer RCS TAVG will be around 552°F.

D -Incorrect See C

Plausible: This answer choice describes the response chosen if one were to 1) consider a STM flow path remained, 2) the Steam leak + steam dump system were to cause excessive cooldown to P-12, and 3) the leak were either limited by the bypasses or Less than the capacity of the SDS and the SDS were to control temp as required.

K/A: **035K3.01 Steam Generator System** (S/GS)—Knowledge of the effect that a loss or malfunction of the S/GS will have on the following: RCS

Importance Rating:	4.4 4.6
Technical Reference:	FNP-1-SOP-17.0, v63.0
References provided:	None
Learning Objective:	**RECALL AND DISCUSS** the Precautions and Limitations (P&L), Notes and Cautions (applicable to the "Reactor Operator") found in SOP-17.0, Main and Reheat Steam. (OPS-52104A05) **DEFINE AND EVALUATE** the operational implications of normal / abnormal plant or equipment conditions associated with the safe operation of the Main and Reheat Steam System components and equipment, to include the following (OPS-40201A07):
Question History:	NEW
K/A match:	SG "LOSS/Malfunction" = STEAM leak (dump malfunction) during steam line warmup and resultant isolation (return to ARVs for RCS temp control). EFFECT on RCS = RCS TAVG.
SRO justification:	N/A

37. 038EG2.4.47 037/NEW/BRUNO SUGGESTED/C/A 4.3/4.1/EPE038EG2.4.47/EEP-3 PG 39/2/FIX 2.21/EDITORIAL

Unit 1 has experienced a SGTR on the 1A SG. The following plant conditions exist:

- EEP-3.0, Steam Generator Tube Rupture, is in progress.
- Normal charging has been aligned.
- SG levels and trends are as follows:

1A	1B	1C
39% ↓	41% ↑	40% ↔

- Pressurizer level is 40% and ↑.

Which one of the following describes the required actions to minimize RCS to secondary leakage per EEP-3.0?

REFERENCE PROVIDED

A. RAISE charging flow ONLY.

B. LOWER PRZR Pressure ONLY.

C. Energize PRZR heaters ONLY.

D. BOTH LOWER PRZR Pressure AND RAISE charging flow.

PROVIDE: EEP-3.0, ver 27 step 31.1, (pg 39 of 54)

EEP-3 version 27, step 31 directs controlling RCS parameters to minimize RCS to secondary leakage.

Because PRZR Level is sufficiently high >25% {50%}, **Chg flow could be adjusted** (see step 24 [CA]-- control < 50% {60%}). But is NOT required to be raised or lowered.

Because 1A SG level is falling, inleakage to the RCS is indicated and RCS pressure should be raised by energizing PRZR heaters. (REF table step 31.1).

A: Incorrect: This would be correct if adverse containment conditions were in effect since PZR level is <50% ; Normal Charging has been aligned which implies that there is NO LOCA concurrent LOCA and ADVERSE containment parameters would **NOT** be anticipated for a SGTR; **otherwise ECP-3.1** would be in progress.

Plausible: If one incorrectly assessed Adverse Conditions

B: Incorrect: Plausible:
1) if one incorrectly utilized 1B SG level to assess this step 31.1 **OR**
2) if incorrectly read the table by using the TREND of PZR level (rising) to assess the step 31.1 (ie. PZR LEVEL VS TREND of **PRZR LVL** instead of PZR LEVEL vs Trend of ***SG level***).
3) if one was not familiar with the meaning of "bracketed numbers"

C: Correct: This is the require action for PZR level **>25% and <60%** coincident with 1A SG lvl **falling**.

D: Incorrect Plausible: This answer choice is a combination of the errors of Choice A and B: IF one incorrectly assumed adverse numbers AND also incorrectly utilized the TREND of PRZR level instead of the trend of SG level then this would be chosen.

K/A: **038EG2.4.47 Steam Generator Tube Rupture**—Ability to diagnose and recognize trends in an accurate and timely manner utilizing the appropriate control room reference material.

Importance Rating:	4.2 4.2
Technical Reference:	FNP-1-EEP-3.0, v27
References provided:	FNP-1-EEP-3.0, v27, Pg 41 (1 page total)
Learning Objective:	EVALUATE plant conditions and DETERMINE if any system components need to be operated while performing EEP-3, Steam Generator Tube Rupture. (OPS-52530D06).
Question History:	NEW
K/A match:	Suggestion from CE implemented. KA match: SGTR procedure implementation based upon PRZR level status and SG level trends USING EEP-3 step 31.1 table (control room reference).
SRO justification:	N/A

38. 039K4.02 038/NEW/N/A/C/A 3.1/3.2/039K4.02/N/3/FIX 2.7/

Unit 1 is operating at 18% power with the following conditions:

- Main Generator has been tied to the grid.
- Rods are in Manual control.
- Steam dumps are in STM PRESS mode.
- PK-464, STM HDR PRESS, controller is in automatic.

A Governor Valve malfunction occurred causing a step rise in steam flow. The following response/conditions resulted:

- The Main Turbine was manually tripped.
- RCS temperatures have fallen to the listed values and are beginning to recover:

	1A	1B	1C
- TAVG RCS LOOP	539°F	542°F	543°F

Which one of the following completes the statements below?

The Limits of TS 3.4.2, RCS Minimum Temperature for Criticality, (1) been exceeded.

The steam dumps (2) automatically re-open to control RCS temperature.

	(1)	(2)
A.	have NOT	WILL
B.	have NOT	will NOT
C.	HAVE	WILL
D.	HAVE	will NOT

FSD 181007, v17.0 F-2 Sheet 10. Also from **AOP-100 Section 1.3 Figure 2** one can identify that P-12 will BLOCK (VENT) air from the STEAM dumps while temperature is <543°F.

A second ACTION which occurs by P-12 WHILE in the Steam Pressure mode is PK-464, STM PRESS, controller will be transferred to **MANUAL with a 0% demand.** Therefore in this MODE of operation they will NOT re-open.

Distractor Analysis:

A. Incorrect 1) TS 3.4.2 min temp for criticality is ≥541°F in "**EACH RCS loop**".

Plausible: The AVG temp of the water entering the CORE (the AVG of the three loops) is >541°F (541.3 °F to be exact). If one incorrectly recalled the TS requirement to read **ANY or AVG of the loops vs EACH LOOP**, then this answer choice would be selected.

2) See above.

Plausible: This would be true if in Tavg Mode and RCS temperature had risen to > 556°F **ASSUMING They were ARMED**. [(575-547)÷ 100%]× 18% + 547°F = 552°F +4°F

B. Incorrect 1) See A.1
2) See above.

C. Incorrect 1) See D.1
2) See A.2

D. Correct 1) **EACH loop** RCS temp must ≥ 541°F, per TS 3.4.2.2)
2) See above. **PK-464 transfers to manual operation and is forced to a 0% output and remains at 0% and in manual.**

K/A: 039K4.02	Main and Reheat Steam System—Knowledge of MRSS design feature(s) and/or interlock(s) which provide for the **Utilization of T-ave. program control when steam dumping** through atmospheric relief/**dump valves, including T-ave. limits**
Importance Rating:	3.1 3.2
Technical Reference:	FNP-1-AOP-100.0, V11.0
References provided:	None
Learning Objective:	**RECALL AND APPLY** the LCO and APPLICABILITY for Technical Specifications (TS) or TRM requirements, and the REQUIRED ACTIONS for 1 HR or less TS or TRM requirements, and the relevant portions of BASES that DEFINE the OPERABILITY and APPLICABILITY of the LCO associated with the Main and Reheat Steam System components and attendant equipment alignment, to include the following (OPS-52104A01): 3.3.2 -- MSLIS. **DEFINE AND EVALUATE the operational implications of abnormal plant or equipment conditions** associated with the operation of the Steam Dump System components and equipment to include the following (OPS-52201G07): [...] • Protective Interlocks (Condenser available, C-9, Low-Low TAVG signal, **P-12)** [...]
Question History:	NEW
K/A match:	MS&R design relating to Tavg program control-- malfunction of the SDS creates P-12 (INTERLOCK) which operates both the SDS. This question requires the examinee to recall the TS 3.4.2 RCS TAVG temp limit AND the SDS operational implications following a P-12 actuation WHILE in STM PRESSSURE MODE of operation.
SRO justification:	N/A

39. 040AA1.11 039/NEW/N/A/C/A 4.1/4.1/040AA1.11/N/3/MAJOR MOD-V3/HIGH MISS

A steam leak which caused a 20% mismatch in Turbine and Rx power has occurred in the Turbine Building.

ALL actions of AOP-14.0, Secondary System Leakage, have been completed.

The following conditions exist:

- The Reactor was tripped using the CRDM MG set supply breakers.
- ESP-0.1, Reactor Trip Response, is in progress.
- RCS Tavg is 540°F and ↑ .
- SG NR levels are as follows:

1A	1B	1C
58%	60%	58%

Which one of the following completes the statements below?

The Feed Regulating Valves _(1)_ automatically CLOSED.

The SGFPs will be coasting down _(2)_.

	(1)	(2)
A.	HAVE	to a stable 3200 RPM
B.	HAVE	to less then 500 RPM
C.	have NOT	to a stable 3200 RPM
D.	have NOT	to less then 500 RPM

Following a STEAMLINE break of **>10% the crew would be required to Manually trip the RX (AOP-14.0) and close the MSIVs**. Further, due to the P-4 malfunction, it is likely that the MSIV closure would automatically occur due to High steam flow (variable setpoint --$f(x)_{\{20>x\leq 100\}}$= 0.875 (x) + 22.5) coincident Lo-Lo Tavg signal. The closure of the MSIVs will result in a Loss of SGFPs (**there is NO SGFP trip signal present if a SI signal is averted)**. IF RCS temperature falls to the setpoint of RCS TAVG LO (554°F) a Feedwater ISOLATION signal is generated **(assuming P-4 is satisfied)**.

The SGFP will trip on any one of the following signals:

1. Local manual push button
2. Remote manual push button (MCB)
3. Overspeed--5775 rpm
4. Manual actuation of the overspeed trip
5. Forward thrust bearing vibration at +10 mils
6. Reverse thrust bearing vibration at -25 mils
7. Low bearing oil pressure--10 psig decreasing
8. Low pressure oil to interface valve--35 psig decreasing
9. Hi-Hi steam generator level--82 percent level in one steam generator detected by 2/3 sensors

10. Low vacuum in main condenser--18 inches Hg VAC (5.9 psia)
11. **Safety injection (SI) signal**
12. Low feed pump suction pressure--< 275 psig for 30 seconds on 2/3 sensors
13. Flooding in main steam and feedwater valve room--4" ± 3 inches

A. Incorrect 1) due to RCS temp < 554°F, if **P-4 had been satisfied** (either train) then the FRV and FRBVs would have automatically closed. Also they would automatically close when SGNR level had returned to program level.

2) Either the actions of AOP-14 or a HIGH steam flow LO-LO Tavg signal autoclosure would result in MSIVs closing; therefore there is no steam available to run the SGFPs.

Plausible: This would be true if the **MSIVs remained open AND P-4 had actuated.** If one were to only recall the SGFP trip signals **and not consider the MSIV closure**, there has been NO TRIP of the SGFP.

B. Incorrect 1) See A.1
2) See above.

Plausible: This answer combination would be true if either train P-4 had actuated.

C. Incorrect 1) See D.1
2) See A.2

D. Correct 1) MFIS actuates only upon P-14, SI, or P-4 w/ Lo Tavg. Since none of these signals is satisfied, then the FRVs will NOT automatically close.

2) AOP-14 directs closing MSIVs immediately upon tripping the RX; Additionally, if not manually actuated, the lack of P-4 would result in a HIGH steam flow w/ LO-LO Tavg signal which would then automatically close the MSIVs. **MSIV closure (manually or automatically)** will terminate all steam to the SGFPs.

040 W/E12 AA1.11

K/A: **040AA1.11** Steam Line Rupture—Ability to operate and / or monitor the **MFW SYSTEM** as they apply to the Steam Line Rupture.

Importance Rating:	4.1 4.1
Technical Reference:	A-181007, v18.0 FNP-2-AOP-14, v10.0
References provided:	None
Learning Objective:	EVALUATE plant conditions and DETERMINE if any system components need to be operated while performing AOP-14, Secondary System Leakage. (OPS-52521O06)
Question History:	NEW
K/A match:	replaced original idea due to overlap with 059A3.02. (Q44) **KA match is satisfied since the question requires knowledge of how the excessive cooldown** caused by the steam leak will affect the FRV/FRBVs, this would be a required manual action (Lack of P-4) to prevent excessive cooldown. **Also**, knowledge of the required actions and how **those actions (automatic or manual closure of MSIV)** will **affect the SGFP.**
SRO justification:	N/A; major mitigative strategy & systems knowledge.

40. 054AA2.03 040/NEW/N/A/MEM 4.1/4.2/APE054AA2.03/N/2/HBF/GTO/

Unit 2 is operating at 36%, the following conditions exist:

- Condenser Vacuum is degrading.
- 1A SGFP is the ONLY pump running.

Which one of the following completes the statement below?

The 1A SGFP will trip at a condenser vacuum **setpoint** of ____ ;

Both MDAFW pumps will start ____ .

	SGFP trip setpoint	MDAFW start
A.	5.9 psia	immediately upon trip of the 1A SGFP
B.	10.8 psia	immediately upon trip of the 1A SGFP
C.	5.9 psia	ONLY after any SG level falls below setpoint
D.	10.8 psia	ONLY after any SG level falls below setpoint

The SGFP(s) will automatically trip signals are as follows:

- MSVR water level rises to > 4"
- MFWIS
  —Safety Injection (SI) signal
  — P-14 (sealed in with P-4)
  — Lo Tavg (<554°F) coincident with P-4.
- Low suction pressure (275 psig for > 30 secs)
- Low oil pressure
  — bearing oil (<10 psig)
  — interface valve oil pressure (<35 psig)
- **Low condenser vacuum (5.9 psia)**
- Overspeed (5775 rpm)
- Thrust bearing wear (+10/-25 mils)

The MDAFW pumps auto-start upon the following signals:

- **Closure of the HP & LP supply valves for BOTH SGFPs (4 of 4 limit switches-** *IF NOT DEFEATED***)**
- Any Sequencer actuation
  — Undervoltage of respective safety train
  — SI on respective operable SSPS
- Narrow range level <28% on 2/3 detectors per any ONE SG
- AMSAC (if >40% turbine power and 2/3 SG Levels < 10% (> 30 sec)

Distractor analysis:

A. Correct 1) see above for SGFP trip criteria
2) See above for AFW Auto-starts

B. Incorrect 1) This is the setpoint for C-9, Condenser Available.

Plausible: This is the setpoint for the interlock disables the steam dumps (C-9), One could reason that if the condenser was not "available" then the Stm Driven Generator Feed Pumps would be tripped; thereby stopping all steam flow into the main condenser.

2) See A.2

C. Incorrect 1) see A.1
2) See above for AFW autostart. Although only one of the two SFGPs had "tripped" the condition that initiates a start of the AFW pumps is the closed limit switches on the steam admission valves to both SGFPS (4 of 4).

Plausible: IF the MDAFW pump AUTO-DEFEAT switches were in the "DEFEAT" position (TS 3.3.2 function 6.e *AUTO position any time in MODE 1*), **or**, should one of the two LP stop valve close limit switches not properly function (*4 of 4 required)* , this answer would be true.

FURTHER, upon a Turbine trip from 36% power, SG NR levels are expected to fall to at or below 28% due to the combined effect of STM DUMP operation, Shrink and the loss of the SGFPs. Simple recall of alarms on the simulator may cause this answer to be selected.

D. Incorrect 1) See B.1
2) See C.1

K/A: **038EG2.4.47 Loss of Main Feedwater (MFW)—**Ability to determine and interpret the **Conditions and reasons for AFW pump startup** as they apply to the Loss of Main Feedwater (MFW).

Importance Rating:	4.1 4.2
Technical Reference:	TS & Bases for 3.3.2 function 6.b & 6.e FNP-1-ARP-1.10, v70.0 A181010, v22.0
References provided:	None
Learning Objective:	STATE AND EXPLAIN the operational implications for all Cautions, Notes, and Actions associated with AOP-8.0, Partial Loss of Condenser Vacuum. (OPS-52520H03).
Question History:	NEW
Comments:	**NOTE to examiner:** it is noted that this Question does **NOT address specifically address the fundamental reason** the AFW pump starts since unable to write a psychometrically sound question with this aspect as part of the question. **Instead, the "CONDITION" causing the AUTOSTART of the AFW pumps is targeted.**
K/A match:	Justification for KA match: **A Loss of Feedwater** is caused by the automatic trip of the SGFP, which in turn **results in an Autostart of the AFW pumps**. The question challenges the examinees awareness of the AFW pump's autostart on a trip of both SGFPs AND the condenser vacuum condition that will initiate sequence of event resulting in the start.
SRO justification:	N/A

41. 055EA2.02 041/MOD/FNP-NO NRC/C/A 4.1/4.4/EPE055EA2.02/N/3/MAJOR MOD-V1/

Unit 1 was operating at 98% power when a Loss of ALL AC Power occurred. Twenty (20) minutes later, the following plant conditions exist:

- All efforts to restore AC power have failed.
- DC loads have been minimized per Attachment 4 of ECP-0.0, Loss of All AC Power.
- RCS pressure is 1765 psig and ↔.
- Containment pressure is 1.9 psig and ↔.
- RCS Loop THOT is 595°F in all 3 loops and ↓.
- RCS Loop TCOLD is 551°F in all 3 loops and ↓.
- Core exit TCs indicate approximately 600°F and ↓ slowly.

Which one of the following completes the statement below?

Adequate Natural Circulation _(1)_ exist.

When required to commence the cooldown, the SG Atmospheric Relief valves are controlled _(2)_ per ECP-0.0.

	(1)	(2)
A.	does NOT	remotely from the 100' Lower Equipment Room
B.	does NOT	locally at the valve
C.	DOES	remotely from the 100' Lower Equipment Room
D✓	DOES	locally at the valve

NOTE: it is important to note that ECP-0.0 does not contain a step to verify or check natural circulation is adequate, however unless the RCS in NOT intact (step 17) **RCS temp would be maintained via natural circulation for up to 4 hours** or until power is restored.

FNP-ECP-0.0, basis for step 17.5 states that at least one SG narrow range level must be > 31% (above the SG U-Tubes) to ensure that sufficient heat transfer capability exists to remove heat form the RCS **via natural circulation or reflux boiling after the RCS saturates.**

From the WOG EXEC volume Generic Issue, Natural Circulation: verification of natural circulation flow is done using the following symptoms (REF: ECP-0.1 step 15 for plant specifics):

- RCS subcooling based on Core exit TCs should be greater than instrument inaccuracies (> **16°F{45°F}**)
- Core Exit TCs, RCS hot leg Temps and SG pressures should be decreasing slowly with time, as core decay heat falls off.

- RCS cold leg temperatures remain relatively constant or slightly above the saturation temp for the SG pressures being maintained.

STEP 17.4.1 of ECP-0.0 directs LOCALLY controlling intact SG ARVs with the handwheel.

Distractor analysis:

A. Incorrect. 1) See D.1
Plausible: incorrectly assessing/recalling the required subcooling. This would be correct for adverse containment parameters.

2) See step 17.4.1 above.

Plausible:
1) Various components (MSIVs, TDAFW STM ADM Valves) are equipped with a 2 hour air reservoir which allows them to remain OPEN or capable of being opened for up to 2 hours.
2) Further, the PRZR PORVs have a NITROGEN backup which can be aligned in the event of a LOSS OF Air.
3) Finally, the Emergency Air compressors located in the 100' LER are equipped with Air Receivers which, **if normally pressurized**, would permit operation of the SG ARVs from the 100' LER, regardless of the availability of DC power.

AT FNP, the SG ARVs can be controlled from the following locations:
-MCB,
- 100' LER handswitch,
- 100' LER by overriding solenoids,
- or LOCALLY in the MSVR at the valve itself.

SINCE SG ARVs are an integral part of the plant's ability to survive a ***LOSS OF ALL AC event,*** one could reasonably assume that these valves are also equipped *with a contingency to allow for remote operation* following a Loss of All AC power.

B. Incorrect. 1) See A.1
2) See D.2.

Plausible: This answer choice would be selected if ONE were to incorrectly assess subcooling for adverse conditions one might incorrectly assess that this symptom indicates that natural circulation would/could not be established (REFLUX boiling causing core cooling instead).

C. Incorrect. 1) See D.1
2) See A.2

Plausible: This answer choice is plausible if one were to properly assess the existence or adequacy of Natural Circulation but INCORRECTLY

recall the operational capabilities of the SG ARVs as discussed in A.2.

D. Correct. 1) Using the guidance in Step 15 of ECP-0.1 and the knowledge of Natural RECIRCULATION one would assess that natural circulation is adequate:
— THOT is falling,
— CETCs are falling,
— and subcooling: **convert to 1780 psia, T_{SAT} = 619.54°F, therefore there is 19.54°F subcooling.**

2) per step 17.4.1 of ECP-0.0, since these valves are NOT equipped with any air RSVR (such as MSIVs, TDAFW STM ADM VLVS) and the Emergency Air RCVRs will be depressurized and the compressors will be de-energized.

K/A: 055EA2.02 **Loss of Offsite and Onsite Power (Station Blackout)**—Ability to determine or interpret the **RCS core cooling through natural circulation cooling to S/G cooling** as they apply to a Station Blackout

Importance Rating:	4.1 4.4
Technical Reference:	WOG Executive Volume Generic Issue: Natural Circulation FNP-1-ECP-0.0, v25.0
References provided:	None
Learning Objective:	ANALYZE plant conditions and DETERMINE the successful completion of any step in (1) ECP-0.0, Loss of All AC Power; (2) ECP-0.1, Loss of All AC Power Recovery, Without SI Required; (3) ECP-0.2, Loss of All AC Power Recovery, With SI Required. (OPS-52532A07
Question History:	NEW or Modified FNP bank; **(ESP-0.1-52531B06 017 part 1;** Replaced part 2 to address plausibility for ECP-0.0 scenario.**)**
K/A match:	INTERPRET NAT CIRC Cooling-- requires evaluating plant conditions and determining if natural circulation exists or not; S/G cooling--the method of controlling the SG ARV which are available following a loss of All AC.
SRO justification:	N/A -- systems knowledge/ major mitigative strategy evaluation.

1. ESP-0.1-52531B06 017/HLT//C/A 4.1/4.4/056G2.1.2//Y//

Unit 1 was operating at 98% power when a loss of off-site power occurred. Twenty minutes later, the following plant conditions exist:

- RCS pressure is 2235 psig ↔
- RCS Loop THOT is 595°F in all 3 loops ↓.
- RCS Loop TCOLD is 551°F in all 3 loops ↓.
- Core exit TCs indicate approximately 600°F ↓ slowly.
- Steam Generator pressures are approximately 1038 psig ↔

Which one of the following completes the statement below?

Natural Circulation _(1)_ exist.

Heat removal must be established / is being maintained using the _(2)_.

A.	does NOT	condenser steam dumps
B.	DOES	condenser steam dumps
C.	does NOT	SG atmospheric relief valves
D✓	DOES	SG atmospheric relief valves

Altered pt 2 to address plausibility for ECP-0.0 scenario.

Changed failure to match KA-- loss of all ac.

42. 057AA1.01 042/FNP BANK/FNP 2006/C/A 3.7/3.7/APE057AA1.01/N/2/MAJOR MOD-V2/HIGH MISS

Unit 1 is at 100% power, when the following conditions occur:

- WD1, 1A INV FAULT, comes into alarm.
- 1A INVERTER EPB ammeter reads 0 amps.

Local 1A Inverter indications are as follows:

• BATTERY INPUT BKR	TRIPPED
• INVERTER OUTPUT BKR	CLOSED
• BYPASS SOURCE POWERING LOAD light	NOT lit
• BYPASS SOURCE AVAILABLE light	LIT

Which one of the following describes the required action to take with 1A Inverter in order to re-energize vital loads per WD1?

A. Depress the BYPASS SOURCE TO LOAD pushbutton.

B. The STATIC TRANSFER switch must be repaired prior to re-energizing vital loads.

C. Place the MANUAL BYPASS switch to the BYPASS SOURCE TO LOAD position.

D. The electrical fault which caused the DC input breaker to trip must be repaired prior to re-energizing vital loads.

Distractor Analysis:

A. Incorrect. **Plausible:** Operation of the BYPASS SOURCE TO LOAD pushbutton is the method utilized to remove the inverter from service per SOP-36.4 **When the "In sync" light is lit, this action would allow the static transfer switch to transfer to the alternate source. However,** the "In Sync" light would not be lit for the conditions provided and the static transfer switch will not transfer.

B. Incorrect. Even though the static transfer switch needs repair, it does not have to be repaired prior to energizing the 120VAC vital loads.

Plausible: Normally, aligning the Bypass source would NOT be permitted if the **IN SYNC** light is **NOT lit** because it would indicate the potential for paralleling two power sources out of phase; If one were to recall the CAUTION in SOP-36.4 which specifically states "DO NOT TRANSFER UNLESS UNIT IS IN SYNC" without understanding that this caution is only applicable if the BUS is being powered from the inverter.

C. Correct. Transfer the MANUAL BYPASS switch to the BYPASS SOURCE TO LOAD position. The indications show a DC problem with the Input breaker being tripped. No AC problem is indicated since the AC output breaker is still closed. The reason the vital AC Loads are de-energized is that the static bypass switch did not work to transfer the power source from the deen. inverter to the energized bypass source.

The ARP, for this condition, directs switching the MANUAL BYPASS switch to the BYPASS SOURCE TO LOAD position as long as the "BYPASS SOURCE AVAILABLE" light is lit. This is permitted despite the "IN SYNC" light NOT lit because the inverter is not actually powering the bus.

D. Incorrect. Even though the electrical fault needs repair, it does not have to be repaired prior to energizing the 120VAC vital loads. The indications and basic construction of the inverter indicate a DC fault that is electrically isolated from the AC output.

Plausible: Similiar to the Plausibility of B. Since the supply breaker fault had occurred, it would take restoration of the INVERTER power supply from the battery to restore the inverter or the static transfer switch to operation.

K/A: 0**57AA1.01 Loss of Vital AC Electrical Instrument Bus**—Ability to operate and/or monitor ***Manual inverter swapping*** as they apply to Loss of Vital AC instrument Bus.

Importance Rating:	3.7	3.7
Technical Reference:	FNP-0-ARP-2.2, v32.1	
References provided:	None	
Learning Objective:	DEFINE AND EVALUATE the operational implications of normal / abnormal plant or equipment conditions associated with the safe operation of the 120 Volt AC Distribution System components and equipment, to include the following (OPS-40204F09): • Actions needed to mitigate the consequence of the abnormality	
Question History:	2006 FNP NRC Exam *under KA 057EG2.4.31* Bank (120VAC-40204F09 023)	
K/A match:	This question challenges the knowledge of the actions to perform a manual transfer of a faulted inverter under a loss of Vital AC Instrument bus power per the ARP.	
SRO justification:	N/A	

43. 058AK1.01 043/FNP BANK/FNP-NO NRC/MEM 2.8/3.1/APE058AK1.01/N/2/HBF/GTO/

Unit 1 experienced a station blackout, the following conditions exist:

- ECP-0.0, Loss of All AC Power, is in progress.

Which one of the following describes the time required to restore AC power to the 125V DC Battery Chargers and the consequence of exceeding that time requirement per ECP-0.0?

	TIME	CONSEQUENCE
A.	30 minutes	Loss of Main Control Room Emergency Lighting.
B.	30 minutes	Inability to start and load the 1B DG.
C.	90 minutes	Loss of Main Control Room Emergency Lighting.
D.	90 minutes	Inability to start and load the 1B DG.

FSAR section 8.3.2.1.1.1.1 states:

The capacity requirement for the batteries during normal operation is to carry the loads necessary to support plant operation for 2 hours. The 2-h duration is based on the time required for the operators to connect the spare battery charger to the system if the connected battery charger fails on either train. During this 2-h period, the redundant train of the dc system with operable battery charger is available for accident mitigation, if required.

FSAR section 9B.4.1.19 Emergency Lighting states:

The main control room is provided with both normal AC and DC emergency lighting. [...] The dc incandescent lights which are fed from their respective train oriented station batteries [...]. **All other areas of the plant are provided with *1 1/2-h lighting* to facilitate personnel exit in an emergency**

ALSO, from FNP-1-ECP-0.0, step 5-CAUTION states: "IF power is not restored to the 125 V DC battery chargers on each train **within 30 minutes, THEN there may not be enough DC capacity to start a DG and sequence needed loads."**

Distractor Analysis:

A Incorrect **MCR Emergency Lighting is supplied from the 125V DC Bus/Batteries**, without the battery chargers aligned, the battery will carry required loads for a **minimum of 2 hours.**

Plausible: **Emergency lighting** which is **supplied from self-contained battery packs** which is required for EMERGENCY EGRESS are rated for **less time (90 minutes).**

B Correct. See step 5 Caution; The DGs field flash circuit is powered from the 125V DC buses; and if the Battery chargers are not restored within 30 mins (16 for 2A) there may be insufficient stored energy to flash the DG field and therefore prevent closing the output breaker and loading the DGs.

C Incorrect - Plausible: **Emergency lighting** which is **supplied from self-contained battery packs** which is required for EMERGENCY EGRESS are only rated for **90 mins;**

D Incorrect - SEE B. Plausible: The capacity requirement for the batteries during normal **operation is to carry the loads necessary to support plant operation for 2 hours;** one may believe that a 30 min buffer would be required by procedure.

K/A: **058AK1.01 Loss of DC Power**—Knowledge of the operational implications of the ***Battery charger equipment and instrumentation*** as they apply to Loss of DC Power:

Importance Rating:	2.8	3.1
Technical Reference:	FSAR, v24.0 FNP-1-ECP-0.0, v24.0 FNP-0-ECB-0.0, V3.0	
References provided:	None	
Learning Objective:	STATE AND EXPLAIN the basis for all Cautions, Notes, and Actions associated with (1) ECP-0.0, Loss of All AC Power; (2) ECP-0.1, Loss of All AC Power Recovery, Without SI Required; (3) ECP-0.2, Loss of All AC Power Recovery, With SI Required. (OPS-52532A03).	
Question History:	BANK (EC-0.0/.1.2-52532A03 005) minor mod	
K/A match:	Knowledge of the limitations of the BATTERY (Charger supported system) and the time expected to restore the battery charger (30 mins) to prevent the LOSS of DC POWER, to a significant extent: Operational consequence-inability to start the DGs.	
SRO justification:	N/A	

1. EC-0.0/.1.2-52532A03 005/HLT//M (LEVEL 1) PROC/EPE055EK3.01////

Unit 1 experienced a station blackout and operators have implemented ECP-0.0, Loss of All AC Power. The 1A and 1B auxiliary building battery chargers are inoperable.

Power must be restored to the 125V DC battery chargers on each train within _____ to ensure sufficient DC capacity to _____.

A. 30 minutes, provide emergency lighting

B✓ 30 minutes, start a diesel generator

C. 2 hours, sequence needed loads

D. 2 hours, start a diesel generator

Sequence needed loads would be the next best distractor but in 2+2 formatting would create a second correct answer.

modified C&D distractors for plausibility when coupled with lighting.
formatted to 2+2 for "preferred" formatting;

44. 059A3.02 044/FNP BANK/FNP 2005/C/A 2.9/3.1/059A3.02/N/2/FIX 2.21/

Unit 2 is at 85% reactor power and stable, holding for chemistry with the following conditions:

- Rod control is in MANUAL.
- FRV original positions are 68% open.
- A 200 MW load rejection occurs.

Which one of the following completes the description of the **overall** automatic response for the Feed Regulating Valves (FRV) position and SG water level?

The Feedwater Regulating Valves will _(1)_ ;

and each SG water level will _(2)_.

A. 1) open, then return to a position < 68% open

2) lower, then return to original level

B. 1) close, then return to a position < 68% open

2) rise, then return to original level

C. 1) close, then return to an approx. 68% open position

2) rise, then stabilize at a level lower than the original level

D. 1) open, then return to an approx. 68% open position

2) lower, then stabilize at a level lower than the original level

This event has several things that need to be taken into account:

- Rod control is in manual
- Feed Control (pumps and valves) & Steam dumps are in auto
- there is no operator action.

Sequence of events following the load rejection include:

1) Steam Flow drops significantly
2) Although FF > SF, SGWL will lower approximately 10% due to shrink.
3) **The level lowers causing** FRV **position to open**
   -- note: "overall" response is cued since the FRV's initial response is to the change in feed flow; until the level dominant signal overrides this close signal (<1.5 sec).
4) Steam pressure rising, coupled with the FRVs opening causes the SGFP speed then to increase.
5) VALVES OPEN with MORE FEED results in restoration of SGWL.
6) **As level returns to program**, the combined flow and level error will begin to drive the FRV position closed again.
7) **the SS conditions are that STM flow is LESS, therefore the FRVs will be more closed than at the beginning of the transient.**

A. Correct See above.

B. Incorrect SGWL does not increase to start with, instead it shrinks. The FRV will open initially to recover level and then return to a position more closed than when it started due to stm dump program and lower stm flow, which equates to lower feed flow. **PLAUSIBLE: Shrink/Swell effects are commonly reversed. This would be selected if examinee was aware of program level but incorrectly assessed a SWELL event vs SHRINK. P**lausibility proven in 71 administrations at time of selection of this question (12.68 % select this answer choice).

C. Incorrect Plausible: if one was not aware of the fixed program level (OR thought the system worked on PROPORTIONAL response only) AND incorrectly assessed a SWELL vs a shrink. Plausibility proven in 71 administrations at time of selection of this question (5.63 % select this answer choice).

D. Incorrect Plausible: This answer choice would be chosen if one were to properly assess SHRINK event but was not aware of the LEVEL dominance of the SGWLCS (P+I type function) and considered the SGWLCS as a proportional ONLY controller. Plausibility proven in 71 administrations at time of selection of this question (2.82 % select this answer choice).

K/A: **059A3.02 Main Feedwater (MFW) System**—Ability to monitor automatic operation of the MFW, including: **Programmed levels of the S/G**

Importance Rating:	2.9	3.1
Technical Reference:	FSAR (7.7.1.7), v17 OPS-52201B, v1.0	
References provided:	None	
Learning Objective:	**RELATE AND IDENTIFY** the operational characteristics including design features, capacities and protective interlocks for the following components associated with the Steam Generator Water Level Control System (OPS-52201B02): FRV/FRBV and SGFP	
Question History:	Bank (SGWLC-52201B08 058) ; FNP 2005 NRC exam	
K/A match:	Knowledge of the FIXED level program as well as the SGWLC system operation is required, to assess the response of the MFW system components and SG level response following a Shrink event.	
SRO justification:	N/A	

45. 061AK1.01 045/NEW/N/A/C/A 2.5/2.9/APE061AK1.01/N/2/HBF/GTO/CLAY REVEIW

A LOCA has occurred on Unit 2, and the following conditions exist:

- An SI has actuated.
- Containment pressure peaked at 22 psig and is now ↓.
- R-27A, CTMT HIGH RANGE, is reading 1 R/hr.

Which one of the following completes the statements below?

RE-11, CTMT PARTICULATE (CH 1), __(1)__ an available indication of Containment Radiological conditions.

RE-27A radiation monitor is at the __(2)__.

	(1)	(2)
A.	is NOT	minimum on scale reading
B.	is NOT	Alert alarm
C.	IS	minimum on scale reading
D.	IS	Alert alarm

CTMT ATMOS TO R-11/12 Q1E14MOV3660,3657 &3658 close on a 'T' signal (PHASE A) which is actuated by an Safety Injection, therefore these (P-G) Area Radiation Monitors are NOT available for monitoring containment conditions following an accident which results in a Phase A actuation. (EEP-0 Attachment 3)

The range of R-27A&B, CTMT HIGH RANGE, post accident radiation monitors is The range of each detector is 1 R/h to 10^7 R/h for photon radiation (FSAR 12.1.4.2).

The Alert setpoint for R-27A is 10 R/hr and this is when the Alert Light comes on and Recorder RR-27 will automatically start. The recorder is normally off.

NMP-EP-110-GL01 – FNP EALs - ICs, Threshold Values and Basis Version 2.0
Figure 4, Dose Equivalent Iodine Estimation states: "T**he bottom of the scale for the R-27 monitors is 1 REM/hr."**

Distractor Analysis:

A. Correct 1) See above. R-11 & 12 are isolated on a Phase A signal.
2) See above. 1R/hr is the bottom of the scale for R-27A/B

B. Incorrect 1) See A.1
2) The Alert setpoint is 10 R/hr.

Plausible: RE-002 and RE-007 two other CNMT rad monitors would be AT HIGH ALARM

C. Incorrect 1) Phase A isolation isolates **all automatically isolable process lines, except component cooling water (CCW) to RCPs and instrument air**, at a relatively low containment pressure indicative of primary or secondary system leaks. (TS B3.3.2 function 3)

Plausible: Containment pressure has not been high enough to actuate Phase B; Since these radiation monitors only sample containment conditions and return ctmt air back to containment they may be considered as NOT "PROCESS FLOW" lines, or as an additional exception to the Phase A containment isolation signal.

2) See A.2

D. Incorrect 1) See C.1
2) See B.2

K/A: 061AK1.01 ARM System Alarms— Knowledge of the **operational implications of the Detector limitations** as they apply to Area Radiation Monitoring (ARM) System Alarms.

Importance Rating:	2.5 2.9
Technical Reference:	FSAR chapter 12, v24 A181015, v14.0 TS 3.3.3 & Bases TS 3.3.2 & Bases FNP-1-EEP-0, v43.0 (Attachment 3) NMP-EP-110-GL01, v2.0
References provided:	None
Learning Objective:	RELATE AND IDENTIFY the operational characteristics including design features, capacities and protective interlocks for the components associated with the Radiation Monitoring System to include those items in Table 4-Remote and Local Indications and Controls (OPS-40305A02).
Question History:	NEW
K/A match:	OPERATIONAL implication of the limitation of R-11 is achieved via the **inability/**ability to monitor Cnmt radiological conditions flowing a Containment isolation signal caused by the SI signal. Further knowledge of AREA radiation monitor limitations are challenged by part 2; minimum on scale reading vs. Alert limit of R-27.
SRO justification:	N/A

46. 061K6.02 046/MOD/TURKEY PT 2009/C/A 2.6/2.7/061K6.02/N/3/HBF/GTO/

Unit 1 is in MODE 3 with the following conditions:

At 1000:

- The TDAFW Pump is NOT running.
- HIC-3228AA, TDAFWP to 1A SG FLOW CONT, potentiometer is set to 50%.
- HV-3228A, TDAFWP TO 1A SG, switch is in the MOD position.

At 1010:

- The TDAFW pump receives an Auto Start signal and then trips on an OVERSPEED condition.

Which one of the following completes the statement below?

At 1010, HV-3228A will ____ .

A. automatically OPEN to 50%, AND REMAIN 50% open

B. OPEN fully, THEN RETURN to 50% open

C. OPEN fully, AND REMAIN fully open

D. REMAIN 50% open

A181010, v22, paragraph 3.10.2.3 states, "Emergency trip speed of the turbine shall not exceed 115 percent of the rated speed of 3960 rpm for the turbine (4554 rpm)."

A181010, v22, paragraph 3.11.2.1 states, "These feed regulator valves [HV3228A/B/C] are **fully opened on a TDAFW pump start.** These valves can be used for AFW flow modulation after the two-out-of-three steam generator low level signal has been reset (Reference 6.7.014).

This is accomplished be de-energizing the air supply solenoids and will remain de-energized until the start signal is "RESET" from the MCB handswitches. (REF OPS-52102H Figure 10 for simplified logic). The OVERSPEED TRIP has NO impact on the FCV operation.

Distractor Analysis:

A. Incorrect This answer choice implies that the valve is CLOSED and NOT ABLE TO BE MODULATED UNLESS an auto-start signal is present.

B. Incorrect This answer choice implies that the FCV position will return to modulate status immediately upon trip of TDAFW pump; without any manual actions this will **not** occur.

C. correct PRIOR to auto-start, the position will be intermediate at 50%.
UPON receiving a START signal, The FCV will fully open until "RESET" to permit modulation, **and are NOT affected by the status of the TDAFW pump itself.**

D. Incorrect This answer choice implies that the FCV is not affected in any way by the Auto-start signal.

K/A: **061K6.02 Auxiliary Feedwater System**— Knowledge of the effect that a loss or malfunction of **pumps** will have on the AFW system.

Importance Rating:	2.6 2.7
Technical Reference:	FSD A181010, v22.0 OPS-52104C,v1.0
References provided:	None
Learning Objective:	RELATE AND IDENTIFY the operational characteristics including design features, capacities and protective interlocks for the components associated with the AFW System [...] (OPS-40201D02)
Question History:	MOD; Turkey POINT 2009 NRC exam
K/A match:	LOSS of PUMP- OVERSPEED condition and EFFECT on TDAFW FCV following the trip.
SRO justification:	N/A.

Q #46

The Auxiliary Feedwater (AFW) system receives an auto-start signal while Unit 3 is in Mode 3.

- "A" AFW pump trips on over-speed.

Which ONE of the following describes the effect of this event on Train 1 AFW flow control valves?

The Train 1 AFW flow control valves will:

A. NOT auto-open. NO response to start or trip

B. auto-open and remain fully open. ONLY start response

C. auto-open but will close after the AFW pump trips. Response to START and TrIF assuming start position is clos

D. auto-open and then throttle back to maintain 130 gpm flow. Response to Start and Trip; assuming start position is thro

FNP design prevents D from being plausible.. FCV potentiometer has no means for auto control... add an intermediate setting on pot and modify distractors as noted above.

47. 062A1.03 047/NEW/N/A/C/A 2.5/2.8/062A1.03/N/2//

Unit 1 is at 38% power, when the following conditions occur:

- A failure of the 1A Inverter occurs and the 1A Inverter swaps to the Bypass source.

Shortly afterwards, a LOSP occurs on A Train ONLY.

Which one of the following completes the following statements **prior to any operator actions**?

120V Vital AC Panel 1A will _(1)_ de-energized.

While the 120V Vital AC Panel 1A is de-energized, _(2)_ OUTWARD rod motion is disabled.

	(1)	(2)
A.	ONLY momentarily be	ALL (manual and automatic)
B.	ONLY momentarily be	ONLY automatic
C.	REMAIN	ALL (manual and automatic)
D.	REMAIN	ONLY automatic

The failure of the 1A inverter will cause the Backup power source to be aligned automatically via the static transfer switch (NOTE the 50 AMPS on the inverter ammeter: **this would be 0 amps if the static transfer system had failed**) to the 120V REGULATED Panel 1C which is intern powered from MCC 1U.

From WD1 alarm response states:
IF DC input voltage drops to 103 V DC, THEN inverter transfers to bypass source.

An inverter fault when the bypass source is not available will result in a loss of power to 120V VITAL AC INSTRUMENTATION PANEL 1A,Q1R21L001A, as indicated by the following:

- **Loss of power to Channel I Nuclear instrumentation**.--- OUTWARD ROD MOTION IS BLOCKED BY the High Power Rod Stop Bistable being Tripped.

MCC 1U will be re-energized immediately upon closure of the 1-2A DG output breaker closing and energizing the A Train ESF buses.

Distractor Analysis:

A. Correct. See above.

B. Incorrect. 1) See above.
2) if one had confused the C-5 Rod stop with that of C-1 through C-4 then one would mistakenly think that manual rod withdrawal still remained.

Plausible: C-5 (channel 3 and 4 instruments feed this Control function) does Block ONLY manual rod motion. Confusing this Control with that of C-1 through C-4 is likely.

C. Incorrect. 1) One may believe that the power supply for 120V Regulated AC panel 1C was NOT reloaded by the LOSP sequencer.
2) See above.

Plausible: If the backup power supply MCC 1U was not restored by the sequencer, then this would be true; one must recall the power supply to the Constant Voltage Transformers supplying the Regulated AC busses.

D. Incorrect. 1) See C.1
2) See B.2

Plausible: this is a combination of the errors that would lead to selecting B and C. These two parts are NOT mutually exclusive and therefore plausible.

K/A: **062A1.03 AC DISTRIBUTION SYSTEM** —Ability to predict and / or monitor changes in parameters (to prevent exceeding design limits) associated with operating the ac distribution system controls including – Effect on instrumentation and controls of switching power supplies

Importance Rating:	2.5 2.8
Technical Reference:	SOP-0-SOP-0.3, v46.0 FNP-0-ARP-2.2, v32.1 A-181004, v49.0
References provided:	None
Learning Objective:	DEFINE AND EVALUATE the operational implications of normal / abnormal plant or equipment conditions associated with the safe operation of the 120 Volt AC Distribution System components and equipment, to include the following (OPS-40204F09): • Actions needed to mitigate the consequence of the abnormality
Question History:	NEW (mimicked IDEA from Turkey point 2010, but this is an entirely NEW question).
K/A match:	PREDICTS the impact on ROD CONTROL following a shift in POWER sources following a LOSP event. PART I is added to allow a 2+2 format since 4 distinct and plausible answer choices were not recognized during development. This is permitted per the Guidance of NUREG 1021, Appendix B, C.2.f. Further it addresses a portion of the "MONITOR" portion of the KA.
SRO justification:	N/A

48. 062AA1.07 048/FNP BANK/FNP 2008/C/A 2.9/3.0/APE062AA1.07/N/2/HBF/GTO/

Unit 1 is operating at 100% power. The following conditions exist:

- SGBD is on service.
- #1 WMT release is in progress.
- The service water pond level has dropped to 179 feet, 10 inches.

Which one of the following will automatically occur as a result of the Low Pond level condition?

A. SW Dilution Flow will lower; indicated on FR4107, SW DILUTION FLOW,
and
RCV-023B, SGBD Dilution Discharge Valve, will close.

B. SW Dilution Flow will lower; indicated on FR4107, SW DILUTION FLOW,
and
RCV-018, Liquid Waste Discharge Valve, will close.

C. SW Pressure will lower; indicated on PI-3001A & B, SW TO CCW HX HDR PRESS,
and
PCV-562 and 563, Dilution Bypass Valves, will fully open.

D. SW Pressure will lower; indicated on PI-3001A & B, SW TO CCW HX HDR PRESS,
and
MOV-538 and 539, Master Recirculation Isolation Valves, will fully open.

SOP-16.1,v47.0, P&L 3.7 states, "Service Water discharge dilution line "Low Flow" trip from N1P16FS0580 for Steam Generator Blowdown is **set to close RCV-23B (N1G24V138) at 14,500 gpm."**

AOP-31, v11, Step 1-NOTE states describes the automatic response for SW RECIRC and NORMAL Discharge valves upon wet pit level reaching 180 ft.

Step 2.3-CAUTION identifies the dilution line will be isolated and NO LIQUID WASTE RELEASEs are permitted.

Distractor Analysis:

A. Correct- **when the pond level drops to < 180 feet, the SW system changes valve alignments such that the emergency recircs to the pond open and the discharges from each train closes**. This does not affect the discharge pressure of the SW system **BUT does NOT cause** the dilution bypass valves to changes state. **HOWEVER, the dilution line flow drops** to less than 10,000 gpm, which in turn causes the auto-closure of RCV-023B, terminating this Release path. (SEE P&L 3.7 SOP- 16.1)

B. Incorrect- FR4107 will decrease but RCV-018 does **not have a low dilution line auto closure.**

Plausible: since there is a low dilution line closure for one radiation discharge control valve but not all of them. Also, A low dilution flow will prohibit a release. SEE CAUTION step 2.3 of AOP-31.0.

C. Incorrect- **SW discharge pressure will not change**, and the dilution line bypass will not open further since this would act to maintain header pressure less than 110 psig.

Plausible: The SW header will operate on RECIRC back to the POND, one may believe this would cause an **lowered backpressure on SW header which would translate into a higher flow but at a lower pressure (Centrifugal pump curves). If the header pressure ROSE** above 110 psig, then the dilution bypass valves would open.

One might select this answer if they incorrectly assessed pressure impact and CORRECTLY identified that RCV-018 discharge path should not continue; that individual may believe that the system "DILUTION BYPASS" valves may open to ensure a minimum dilution flow is maintained for Radioactive releases.

D. Incorrect- pressure will remain unaffected. However, because of the LOW LVL condition, MOV-538 and 539 **will open** to RECIRCULATE SW return headers back into the POND.

PLAUSIBLE: IF one thought that there was a reduced backpressure on the SW pumps, using centrifugal pump laws, then one could conclude that there is a HIGHER flow rate. A higher flow rate would in turn result in a high dilution surge tank level, which also causes an auto open signal of these MOVs.

K/A: APE062AA1.07 Loss of Nuclear Service Water—Ability to **operate and / or monitor** the ***Flow rates to the components and systems that are serviced by the SWS***; interactions among the component as they apply to the Loss of Nuclear Service Water (SWS):

Importance Rating: 2.9 3.0

Technical Reference: FNP-1-SOP-16.1,v47.0
FNP-0-AOP-31.0,v11

References provided: None

Learning Objective: DEFINE AND EVALUATE the operational implications of normal / abnormal plant or equipment conditions associated with the safe operation of the Service Water System components and equipment, to include the following (OPS-40101B07):

— Normal control methods
— Abnormal and Emergency Control Methods
— **Automatic actuation including setpoint (**example SI, Phase A, LOSP)
— **Protective isolations such as high flow, low pressure, low level including setpoint**
— **Protective interlocks**
— Actions needed to mitigate the consequence of the abnormality

Question History: FNP 2008 NRC; BANK (SW-40101B07 039)

K/A match: This question meets the KA since it asks what the operator is expecting to see (monitor) on the MCB (PI-3001 and FR4107) and what will occur due to the flow to other system components. The candidate will have to know what happens to the SW system on low pond level (loss of SW) and then the effects of the new valve line up on system pressure and flow to other system components (ie. rcv 18 and 23B and PCV-562 and MOV-538)

SRO justification: N/A

1. SW-40101B07 039/HLT//C/A 2.9/3.0/APE062AA1.07////
The following conditions exist on Unit 1:

- The plant is operating at 100% power.
- SGBD is on service.
- #1 WMT release is in progress.
- The service water pond level has dropped to 179 feet, 10 inches.

Which one of the following will the operator observe as a result of this condition?

A. Service water dilution flow on FR4107 will decrease and RCV-023B, SGBD Dilution Discharge Valve, will close.

B. Service water dilution flow on FR4107 will decrease and RCV-018, Liquid Waste Discharge Valve, will close.

C. Service water pressure on PI-3001A and B, SW TO CCW HX HDR PRESS, will decrease and PCV-562 and 563, Dilution Bypass Valves, will fully open.

D. Service water pressure on PI-3001A and B, SW TO CCW HX HDR PRESS, will decrease and MOV-538 and 539, Master Recirculation Isolation Valves, will fully open.

49. 062K3.02 049/MOD/FNP-NO NRC/C/A 4.1/4.4/062K3.02/N/3/FIX 2.7/

Both units are operating at 100% power with the following conditions:

- STP-80.6, DG 1-2A 24 HOUR LOAD TEST, is in progress.
- The 1-2A DG is running at full load and is paralleled to the 2F 4160V bus.
- A LOSP and a SI signal occurs on Unit 1.
- 1-2A DG UNIT SELECTOR SWITCH is in the UNIT 1 & 2 position.

Which one of the following completes the statements below?

The 1-2A DG _(1)_ automatically shift to isochronous control.

DF-08-2, 1-2A DG OUTPUT BKR, to 2F 4160V bus _(2)_ automatically OPEN.

	(1)	(2)
A.	WILL	will NOT
B.	WILL	WILL
C.	will NOT	will NOT
D.	will NOT	WILL

(BULLLET #4) STP-80.6 never aligns the UNIT Selector switch; PROVIDE the switch status in stem for **MEMORY level tests only.**

From STP-80.6, v35.0, step 4.10 NOTE and 5.7.2 CAUTION:

> **1-2A Diesel will transfer to isochronous control if an auto start signal is present (an SI in either UNIT or UV condition on 1F or 2F bus).** In most cases, 1-2A Diesel will NOT remain paralleled to the bus. If the transfer to isochronous control is due to an SI without LOSP in **[one UNIT]** while paralleled to **[the opposite unit, then the]** 1-2A Diesel will remain paralleled to the bus requiring prompt operator action using the guidance of Appendix 1 to minimize the potential for DG damage.

The UNIT 1 LOSP load shed signal will cause DF-08-2 to trip open.

Distractor Analysis:

A. Incorrect 1) see above
2) ***the LOSP initiates a LOAD shed which DOES cause the output breaker to trip; Both the SI and LOSP cause Isochronous mode of operation.***

Plausible: if ONLY an SI occurred on Unit 1*, then the DF-08-2 breaker would NOT automatically open; and manual response per STP-80.2 Attachment 1 would be necessary because the DG would have shifted to isochronous mode.*

B. Correct see above

C. Incorrect 1) The Diesel will shift to isochronous mode for any Auto-start signal.
2) See A.2;

Plausible; This would be true if the 1&2A DG UNIT SELECTOR Switch were in the UNIT 2 position. Since the 1-2A DG is aligned to UNIT 2, one may believe that it will remain aligned and the 1C DG will then align to Unit 1.

D. Incorrect 1) See C.1
2) See B.2

Plausible: this answer choice is plausible if one was aware of the automatic trip open feature via the LOAD shed circuit. However, since the 1-2A DG already aligned to UNIT 2, one may believe that the 1C DG will load UNIT 1 A Train, thus only the 1C DG would shift to isochronous mode. IF the transfer to isochronous mode were linked to the status of the SUT supply breakers vs the autostart signal, one may reason this to be true.

K/A: 062K3.02 AC Electrical Distribution System—Knowledge of the effect that a loss or malfunction of the ac distribution system will have on the ED/G

Importance Rating:	4.1 4.4
Technical Reference:	FNP-0-STP-80.6,v35.0. D177143, v24.0 D177645, v17.0 D177653, v22.0
References provided:	None
Learning Objective:	STATE AND EXPLAIN any special considerations such as safety hazards and plant condition changes that apply to the Diesel Generator and Auxiliaries System (OPS-52102I04)
Question History:	MODIFIED FNP Bank (DG-52102I04 004 & 006); Modified formatting and stem to address KA--added loss of AC power.
K/A match:	KA match is achieved by challenging understanding of how a LOSP/SI on one unit will affect the Large Shared DG when aligned to the opposite unit for surveillance testing.
SRO justification:	N/A

1. DG-52102I04 006/HLT//C/A (LEVEL 2/3) SYS/064A2.03////

Both units are operating at 100% power. The 1-2A Diesel Generator is running at full load for its 24-hour run surveillance test procedure (STP), paralleled to the 2F 4160V bus when the following event occurs:

- An inadvertent safety injection (SI) signal occurs on Unit 1.

Which one of the following will be the response of the DG output breaker, DF08-2, and the response of the 1-2A DG; and the action required to be taken as a result of the SI on Unit 1 IAW SOP-38.0, Diesel Generators?

DF08-2 will ____(1)____ , the 1-2A DG will _____(2)_____

A. (1) trip open
(2) continue to run unloaded. Monitor the DG for proper operation.

B. (1) trip open
(2) continue to run, then DF08-1 will close. Monitor the DG for proper operation.

C. (1) remain closed
(2) shift to isochronous control. Trip open the 1-2A DG output breaker and proceed to shutdown the DG.

D. (1) remain closed
(2) shift to speed control. Trip open the 1-2A DG output breaker and proceed to shutdown the DG.

SI only .. no loss of AC power.. NO KA match.

2. DG-52102I04 004/HLT/LOCT//C/A 3.5/4.0/064K4.11///LOCT/

Both units are operating at 100% power. The 2B diesel is running at full load for its 24-hour run surveillance test procedure (STP), paralleled to the 2G 4160V bus. An inadvertent safety injection (SI) signal occurs on Unit 2.

Which one of the following will be the response of the DG output breaker, DG08, and the response of the 2B DG as a result of the SI?

A. DG08 will remain closed, the 2B DG will shift to isochronous control.

B. DG08 will trip open, the 2B DG will continue to run unloaded.

C. DG08 will remain closed, the 2B DG will shift to speed droop control.

D. DG08 will trip open, the 2B DG will continue to run, then DG08 will close, the sequencer will run and the 2B DG will run in isochronous control.

SI only-- NO loss of ac power.. NO KA match.

50. 063G2.2.44 050/MOD/FNP-NO NRC/C/A 4.2/4.4/063G2.2.44/N/2/FIX 2.7/HIGH MISS

Unit 1 is in MODE 1. The following conditions exist:

- Only one of the AUX BLDG DC battery chargers is operating in "EQUALIZE" mode.
- The AUX BLDG DC Bus Voltage indication on the EPB is as follows:

	1A TRAIN	1B TRAIN
— DC BUS Voltage	130 Volts	137 Volts
— BATT CHARGER AMPERERES	120 Amps	75 Amps

Which one of the following completes the statements below describing the operation of the DC electrical system?

Based on the indications above, the 1B Battery Charger is in the _(1)_ mode of operation.

_(2)_ is/are operating WITHIN the voltage and amperage limits of SOP-37.1, 125 Volt D.C. Auxiliary Building Distribution System.

	(1)	(2)
A.	EQUALIZE	ONLY A Train
B.	EQUALIZE	BOTH Trains
C.	FLOAT	ONLY A Train
D.	FLOAT	BOTH Trains

SOP-37.1, v54.0, step 3.3 states, "Battery charger voltage should **NOT exceed 140 volts. Charger current should NOT exceed 600 amps."**

Step 4.1.1.7 NOTE states, "The battery charger should startup in the FLOAT mode and after five minutes the battery charger will swap to EQUALIZE mode." This step also requires the operator to "CHECK on-coming charger for proper operation [by checking voltage] Less than or equal to 140 VDC and Less than 600 amps.

Step 4.1.1.11 indicates normal/proper operation to be **132 to 132.5 VDC and 75 amps.** A note is included to identify that Amperage may vary due to loading.

ALSO, per SR 3.8.4.1 "Battery terminal voltage must be maintained $\geq$ 127.8 volts."

Distractor Analysis:

A. Incorrect 1) See above.
2) See above.

Plausible: **134 Volts is the upper limit** for **1D, 1E or 1F battery chargers** per SOP-37.2, 250/125V DC Turbine Building Distribution System, or the **SWIS battery charger** per SOP-37.3.

B. Correct See above.

C. Incorrect 1) FLOAT mode of operation is the NORMAL mode of operation of the battery charger. This mode of operation would normally be set for a lower value than that of EQUALIZE.

Plausible: There are two modes of operation for the battery charger, and UPON startup, the battery chargers operate in the EQAULIZE mode for up to 5 mins and will automatically swap to the FLOAT mode. IF the operation of the battery charger in each mode were reversed then this answer choice would be selected.

2) See A.2;

D. Incorrect 1) See C.1
2) See B.2

K/A: **063G2.2.44 D.C. Electrical Distribution**—Ability to interpret control room indications to verify the status and operation of a system, and understand how operator actions and directives affect plant and system conditions.

Importance Rating: 4.2 4.4

Technical Reference:	FNP-1-SOP-37.1, V54.0 FNP-1-SOP-37.2, v21.0 FNP-0-SOP-37.3, v20.0
References provided:	None
Learning Objective:	DEFINE AND EVALUATE the operational implications of normal / abnormal plant or equipment conditions associated with the safe operation of the DC Distribution System components and equipment, to include the following (OPS-40204E07): [...] Normal control methods, [...] RECALL AND DISCUSS the Precautions and Limitations (P&L), Notes and Cautions (applicable to the "System Operator") found in the following Procedures (OPS-40204E11): • SOP-37.1, 125V DC Auxiliary Building Dist Sys • SOP-37.2, 250/125V DC Turbine Building Dist Sys • SOP-37.3, Service Water Building 125V DC Dist Sys
Question History:	MOD FNP Bank (DC DIST-40204E11 004 & DC DIST-40204E07 002); to better match the multiple aspects of the KA, particularly the **interpretation of indications**.
K/A match:	Ability to interpret control room indications to ***verify the status and operation of a system;*** *this part of the KA is satisfied in that Control room indications must be assessed to identify which charger is in the FLOAT vs Equalize mode of operation as well as evaluating operation within permissible limits.* ***Understand how*** *operator actions and* ***directives affect plant and system conditions*** is satisfied via challenging understanding of **HOW the battery charger behaves when initially started** (first 5 mins the 1A battery charger operates in EQUALIZE mode of operation) or when operated in EQUALIZE mode for maintenance; The operator must recognize that the elevated voltage is expected and **determine if it remains within the normal procedural (directive) limitation.**
SRO:	N/A

1. DC DIST-40204E11 004/HLT//M (LEVEL 1) SYS/063K1.03////
The upper volt and amp limits for the auxiliary building battery chargers, when placed in service, are:

A. 140 volts / 600 amps.

B. 140 volts / 500 amps.

C. 136 volts / 600 amps.

D. 136 volts / 500 amps.

51. 064K1.04 051/MOD/FNP-NO NRC/C/A 3.6/3.9/064K1.04/N/2/FIX 2.7/

A Loss of All AC has occurred on Unit 1.

- LB-18, 1B 125V DC BUS BATT BKR, has tripped open.
- An Emergency Start of the 2C DG is required using SOP-38.1, Emergency Starting of a Diesel Generator.

Which one of the following completes the statements below?

2C DG MUST BE started _(1)_ .

DJ06-1, 2C DG OUTPUT BKR, to 1J 4160V bus _(2)_ capable of being closed from the EPB.

	(1)	(2)
A.	from the DG Local Control Panel	IS
B.	from the DG Local Control Panel	is NOT
C.	by overriding the Air Start Solenoids	IS
D.	by overriding the Air Start Solenoids	is NOT

The 2C Diesel Generator can not be started by overriding the Air Start Solenoids. This option is only available for the 4075 kW Diesels (1-2A, 1B or 2B DG only).

However, because the 2C DG is equipped with an Automatic Transfer Switch (ATS) it will automatically select to the 2B 125V DC Bus and provide power for flashing the field and DG controls from the DGLCP.

IF there is no DC power available to DJ06-1 it cannot be closed from any REMOTE LOCATION (either the EPB or the DLCP). However, it can be physically closed locally AT the breaker itself.

A. Incorrect 1) See above.
2) Unit 1, B Train breakers must have DC power available from the 1B 125V DC Aux Building Bus to operate remotely.

Plausible: One may believe that the ATS ensures capability of the DG output breaker closure. LOCAL closure or transfer to the EPB is allowed for the other 3 DGs but was recently changed to NOT allow transfer back to the EPB for an emergency start. Knowledge of the capability/availability of EPB operation is needed to select which action is appropriate.

B. Correct See above

C. Incorrect 1) The option of overriding the Air Start Solenoids (STEP 4.11) is only available for the large DGs.
2) See A.2

Plausible: This answer combination is plausible if one were to confuse which diesels are capable of being manually started and closed from the EPB for these same conditions.

D. Incorrect 1) See C.1
2) See above.

K/A: **064K1.04** Emergency Diesel Generators (ED/G)—**Knowledge of the physical connections and/or cause effect relationships** between the ED/G system **and the DC distribution system**

Importance Rating:	3.6 3.9
Technical Reference:	FNP-0-SOP-38.1, 17.0 FNP-1-ECP-0.0, 25.0
References provided:	None
Learning Objective:	RELATE AND DESCRIBE the effect(s) on the Diesel Generator and Auxiliaries System for a loss of an AC or DC bus, or a malfunction of the Instrument Air System (OPS-40102C06).
Question History:	MOD FNP Bank (DG-40102C06 002); *modified to increase plausibility of C&D and due to overlap with 013K2.01. Altered to address HOW TO vs WHAT*
K/A match:	CAUSE-EFFECT—knowledge of how the DC buses will affect the 2C DG start/load capability is directly challenged. INTERCONNECTION— indirectly challenging knowledge of the ATS/ start solenoid operation for each specific DGs. NOTE to examiner: facility **author has evaluated OVERLAP with 058AK1.01**; although the issue is linked to the same steps/cautions within ECP-0.0 the focus of the question is entirely different.
SRO justification:	N/A

52. 064K4.04 052/MOD/FNP-NO NRC/MEM 3.1/3.7/064K4.04/N/2/FIX 2.23/

Which one of the following describes the 1B PRZR heater operation and the required Diesel Generator capacity margin for energizing pressurizer heaters following a Loss of Off-site Power event?

A.
- Group 1B heaters are available for automatic operation AFTER manually aligning LC 1C to LC 1E.
- A margin of 125 kW per bank is required.

B.✓
- Group 1B heaters are available for automatic operation AFTER manually aligning LC 1C to LC 1E.
- A margin of 300 kW per bank is required.

C.
- Group 1B heaters will cycle in automatic with no operator action.
- A margin of 125 kW per bank is required.

D.
- Group 1B heaters will cycle in automatic with no operator action.
- A margin of 300 kW per bank is required.

The 1B heaters, powered from LCC 1C, is **NOT** automatically sequenced on following a LOSP. Therefore, manual alignments at the EPB are required to restore power to these heaters. This is purposeful to prevent inadvertent **OVERLOADING the 2C DG** should it be aligned to the 1G bus.

ESP-0.1, v 32 Attachment 3 provides the necessary guidance to restore PZR heater control.

Attachment 3 step 1.10 provides the following information:

CAUTION: To prevent diesel generator overloading, at least **0.3 MW of diesel generator capacity must be available** prior to energizing a group of pressurizer heaters.

NOTE: The **BYPASS position allows manual energization of pressurizer heater group 1A from the MCB handswitch**, and **automatic energization** based on either pressurizer pressure 2210 psig or pressurizer level 5% above program

Distractor Analysis:

A: Incorrect 1) See B.1
2) see above.
Plausible: 125 kW is the T.S. minimum heater capacity for operability. (T.S. 3.4.9)

B: Correct 1) GP B heaters will cycle in automatic, However, the power supply is not automatically re-aligned and requires manual alignment since LC C does not auto sequence on.
2) Heater KW load is 270 KW therefore to ensure the diesels are not overloaded, 0.3 MW load margin is required.

C: Incorrect 1) This would be true if the 1C load Center automatically realigned.
Plausible: The 1A heater is powered from LCC 1A. LCC 1A **will be automatically energized by the B1F sequencer**; This modification allows for the **1C IA compressor to be immediately available following the sequencer operation**. However, to prevent possibly **overloading the 1C DG** (should it be aligned to supply the 1F ESF bus), a **BLOCKING signal is imposed on the 1A Htrs**; this signal must be BYPASSED with a switch on the MCB prior to operation of the 1A htrs.

The 1B heaters, powered from LCC 1C, is **NOT** equipped with a similar blocking switch. IF one was aware of the reason for this modification (1C Air compressor restoration modification), and consider that NO air compressor is powered from the LCC 1C, it is reasonable to assume that the 1B PRZR heater would be automatically re-powered and available for automatic operation.

D: Incorrect: 1) See C.1
2) See B.2

K/A: 064K4.04 Emergency Diesel Generator—Knowledge of ED/G system design feature(s) and/or interlock(s) which provide for the following: Overload ratings

Importance Rating:	3.1	3.7
Technical Reference:	FNP-0-SOP-38.0-1-2A, ver 10.2 FNP-1-ECP-3.1, v23.0	
References provided:	None	
Learning Objective:	**SELECT AND ASSESS** the Pressurizer System instrument/equipment response expected when performing Pressurizer System evolutions, including the Normal Condition, the Failed Condition, Associated Alarms, Associated Trip Setpoints, to include the components found on Figure 3, Pressurizer and Pressurizer Relief Tank (OPS-52101E07).	
Question History:	Modified from FNP Bank (ECP3.1/.2.3-52532G06 001); modified to 2+2 based on Pre-validation review and consideration that CE would prefer a 2+2 style question.	
K/A match:	Achieved since knowledge of the PZR heater power rating AND the Load Shedding feature of the LC 1C that prevents overloading the 2C DG following a LOSP event is required.	
SRO justification:	N/A	

1. ECP3.1/.2.3-52532G06 002/HLT/LOCT//M (LEVEL 1) PROC/EPE038EA1.38///LOCT/

ECP-3.1, SGTR With Loss of Reactor Coolant Subcooled Recovery Desired, has been entered. Off-site power is unavailable .

Which one of the following describes the PZR heater operation and the required diesel capacity margin for energizing pressurizer heaters?

A. Group A and B heaters will cycle in automatic with no operator action.

   300 kW per bank.

B. Group B heaters are available only after manually aligning 1C 600 V LC to LC 1E.

   300 kW per bank.

C. Group A heaters are available only for Manual operation AFTER placing the Blocking Bypass switch to Bypass.

   125 kW per bank.

D. Group A heaters are available only after manually aligning 1A 600V LC to the LC 1D and placing the Blocking Bypass Switch to Bypass.

   125 kW per bank.

MODIFIED to "PREFERRED" 2+2 format of NUREG.

ECP-3.1, v23.0 step 31 CAUTION states:

IF a DG is already operating above its continuous load rating, THEN additional manual loads should not be added. Unanticipated plant emergency conditions may dictate the need to load the emergency diesel generators above the continuous load rating limit **(i.e. 2.85 MW for small DGs, 4.075 MW for large DGs**). Under these circumstances, diesel generator loading **may be raised not to exceed the 2000 hour load rating limit (i.e. 3.1 MW for small DGs, 4.353 MW for large DGs)**. Diesel loading should be reduced within the diesel generator continuous load rating limit as soon as plant conditions allow.

A: Incorrect: GP A heaters are prevented from operation due to the sequencer's load shed on BKR EA11, reclosure is allowed only after BYPASSING the trip signal.

B: Correct: GP B heaters will not cycle in automatic; also require manual alignment since LC C does not auto sequence on.

Heater KW load is 270 KW therefore to ensure the diesels are not overloaded, 0.3 MW load margin is required.

C: Incorrect: GP A heaters are available for both automatic and manual operation after placing the Blocking Bypass switch in Bypass.

Also, heater load is incorrect. this is the T.S. minimum heater capacity for operability. (T.S. 3.4.9)

D: Incorrect: LC 1A is auto energized by the sequencer step 6, though the Blocking Bypass switch must be placed in bypass to allow operation of the A heaters.

Also heater load is incorrect. this is the T.S. minimum heater capacity for operability.(T.S. 3.4.9)

K/A: 064K4.04 Emergency Diesel Generator—Knowledge of ED/G system design feature(s) and/or interlock(s) which provide for the following: Overload ratings

Importance Rating: 3.1 3.7

Technical Reference: FNP-0-SOP-38.0-1-2A, ver 9.0
FNP-1-ECP-3.1, v23.0

References provided: None

Learning Objective: .

Question History:

Comments:

SRO justification:

53. 065AK3.03 053/MOD/FNP-NO NRC/C/A 2.9/3.4/APE065AK3.03/N/2/HBF/GTO/

Unit 1 is at 100% power. The following conditions exist:

- An Instrument Air rupture has occurred in the 121' Piping Penetration Room.
- BK1, PENE RM TO ATMOS A TRN ΔP HI-LO, is in alarm.
- KD1, IA TO PENE RM PRESS LO, is in alarm.

Which one of the following completes the statement below describing the PRZR level response without any operator action?

Pressurizer level will ____ .

A. lower until Letdown automatically isolates, then will slowly rise

B. rise until the Charging pumps cavitate, then will slowly lower

C. lower continuously until a Safety Injection occurs

D. rise continuously until a Rx Trip occurs

The High Energy Line Break (HELB) protection will isolate many systems within the Piping Penetration Roooms. This particular isolation secures air to the entire Piping Penetration room by closing HV-3885 and HV-3825, IA TO PENE RM, valves. Closing these valves also secure air into containment.

As a result, the following systems/controls are lost upon a loss of any residual air line pressure.

- (delayed) **PRZR SPRAY Valves fail closed**, Any in-surge into the PRZR would cause an increase in pressure, though the heaters control remains available; There is also some amount of bypass spray flow as long as the RCPs remain in operation.
- (delayed) **PRZR PORV are unavailable** since its air supply is also isolated. Thus any increase in RCS pressure would only be mitigated by PRZR SAFETY VALVES.
- (delayed??) **LETDOWN** supplies and orifice isolations will drift closed upon air pressure falling (expected to begin when air pressure lowers to < 80 psig due to LCV-459/460 springs)-this drift closed response may be delayed if air pressure holds. IF the 100' Piping Pen room also pressurizes to 0.2-0.3 psig (ED3 alarm) then an immediate automatic isolation will occur **(HV8175A/B HELB isolation signal)**
- **FCV-122, Charging FCV and HK-186, Seal INJECTION FCV, will fail open** causing PRZR level to rise. Upon level >5% program, the heaters will energize and cause and additional mechanism for RCS pressure rise.
- RMUW control system will be unable to add water to the VCT, since FCV-113B and FCV-114A will have no air available, **however upon 5% VCT level RWST supplies are automatically aligned (MOVs)** and the VCT is automatically isolated (MOVs).

AS a combined effect of INCREASED Charging flow (and a possible DECREASED letdown capacity) with a huge suction supply (RWST) PZR level will rise continuously, although the large cooldown induced by a trip when reaching 92% PRZR level would demonstrate a momentary reduction in PRZR level until temperature stabilized.

Further consideration, because PRZR level would rise > 5% program, the PRZR HEATERS BACKUP heaters would energize and coupled with the increasing water level, cause RCS pressure to rise. If the PZR Spray valves and PORVs are unavailable, pressure will rise to Safety setpoint of 2385 psig. However, because of HV3611, Ctmt air line check valve, and the volume of air available inside containment's IA piping, the Pressure response will be significantly delayed; the PZR spray and PORVs will function for a period of time after the isolation of air to the Penetration Room.

Distractor Analysis:

A. Incorrect Plausible: if one were **incorrectly assume that only Charging flow is lost (FCV-122 fail closed),** then PZR level would lower due to the letdown flow, until PZR level reached 15% at which time, Seal injection would drive level up slowly.

B. Incorrect. Plausible: if one ONLY considered the loss of RMUW and did not consider the automatic operation of **LCV-115 B/C/D/E at 5% VCT level**, then a loss of both letdown and makeup would result in charging pump cavitation and loss of both Charging flow and Seal injection flow, as a result the PRZR level rise would stop and slowly lower as RCP Seal Return flow causes a loss of RCS inventory.

C. Incorrect Plausible: If one were to incorrectly assume that Charging pump is lost (FCV 122 AND RMUW without LCV-115 operation; ie both Charging and Seal injection are lost). Then PRZR level would lower continuously due to RCP SEAL leakoff flow, which will only isolate when a Safety Injection occurs. A safety injection would also open LCV-115B&D, as well as start a second Charging pump, and inject via MOV-8803A/B.

D. Correct See above discussion.

K/A: 065AK3.03 **Loss of Instrument Air**—Knowledge of the **reasons** for the following **responses** as they apply to the Loss of Instrument Air: Knowing **effects on plant operation** of isolating certain equipment from instrument air

Importance Rating:	2.9 3.4
Technical Reference:	FNP-1-ARP-1.10, v70.0 D175034 Sheets 2&3
References provided:	None
Learning Objective:	DEFINE AND EVALUATE the operational implications of normal / abnormal plant or equipment conditions associated with the safe operation of the Auxiliary Building Ventilation System components and equipment, to include the following (OPS-40304B07): • High-Low Penetration Room Pressure • Actions needed to mitigate the consequence of the abnormality
Question History:	MODIFIED BANK (AUX BLDG VT-40304B07 008)-*removed Pressure impact part of question/distractors-- since there is a check valve in the IA line and recent Simulator model changes have calculated a significant delay before a loss of CNMT air header pressure would occur.*
K/A match:	**KNOWING the effect of a Loss of IA on PZR LEVEL** control systems, as well as the RMUW/CVCS system is required to answer this question. **the reasons for the response**: identifying the "reason" for the response is intrinsically incorporated by demonstrating knowledge of the "effect".
SRO justification:	N/A

1. AUX BLDG VT-40304B07 008/HLT/LOCT//C/A (LEVEL 2/3) SYS/APE065AK3.03///LOCT/

Unit 1 is at 100% power. The following conditions exist:

- A boration is in progress to allow stepping rods out.
- A & B pressurizer backup heater groups are on to control RCS pressure.

An instrument failure has just occurred that has caused a high pressure in the penetration room. Which one of the following would occur as a result?

Assume no operator action

A. Pressurizer level would rise, and pressure would fall until a low pressure reactor trip occurred.

B. Pressurizer pressure would rise and stabilize at 2335 psig on the PORVs.

C. Pressurizer level would fall, and pressurizer pressure would rise until high pressure reactor trip occurred.

D✓ Pressurizer pressure and level would rise until a reactor trip occurred on high pressure and/or level.

PRESSURIZER pressure impact is likely delayed, since check valve and volume of the systme inside containment would allow for normal spray system response for some period of time. Simulator model changes have been made due to calculations to better mimic actual plant response. OMITTED pressure portion of the answer choices and focused ONLY on level response because of the suspected and significant delay in pressure response.

54. 067AG2.4.8 054/NEW/BRUNO SUGGESTED/MEM 3.8/4.5/067AG2.4.8/AOP-29 TABLE 1/2/HBF/GTO/

Unit 1 has tripped from 100% power following an electrical grid disturbance. The following conditions exist:

- EEP-0.0, Reactor Trip Or Safety Injection, Immediate Operator Actions are complete.
- A fire has been reported in the 600V/208V MCC 1E.

Which one of the following describes how AOP-29.0, Plant Fire, is implemented in relation to other plant procedures?

AOP-29.0, Plant Fire, is implemented _(1)_ EEP-0.0.

Per AOP-29.0, Table 1, the implementation of _(2)_ is required.

REFERENCE PROVIDED

	(1)	(2)
A.	in parallel with	Attachment 12
B.	instead of	Attachment 12
C.	in parallel with	Attachment 9
D.	instead of	Attachment 9

PROVIDE TABLE 1 of AOP-29.0, v40.0; **NOT direct look up** since one must have KNOWLEDGE of the **LOCATION of MCC 1E.**

1**E 600V/208V MCC** is located in the 100' Lower equipment room.
1E 600V Load Center is located in the 121' Electrical Penetration Room, the same room as the B train ESF bus 1G.

FROM AOP-29.0 PURPOSE statement: "[AOP-29.0] provides actions required in the event of a plant fire. It is meant to be used as a parallel path with other procedures that may be in effect at the time. (EEP, AOP, UOP);

A. Incorrect - 1) See above.

2) See B.2; Plausible: if one had mistaken the 1E 600V MCC with the location of the 1E 4160V LCC (121' Aux Bldg SWGR Room B TRN) then this answer would be selected.

B. Incorrect - 1) see B.2; **Plausible:** This would be true if the MCR becomes inaccessible or uninhabitable per AOP-28.0/28.1/28.2; NOTE 1 of that procedure states this requirement as follows:

"The operator should remain in [AOP-28.0/28.1/28.2] instead of going to FNP-1-EEP-0.0 [...]. [EEP-0.0] assumes the control room is accessible."
2) see A.2

C. Correct - 1) per AOP-29.0 purpose.
2) Per table 1

D. Incorrect - 1) See C.1
2) see B.2

K/A: ~~068~~ 067G2.4.8 **Plant Fire On-site:** Knowledge of how abnormal operating procedures are used in conjunction with EOPs.

Importance Rating:	3.8 4.5
Technical Reference:	FNP-0-AOP-29.0,v41.0 D177011,v13.0
References provided:	FNP-0-AOP-29.0, v41.0, Table 1 pg 1 of 4, **and** pg 2 of 4 **(2 pages total)**
Learning Objective:	STATE AND EXPLAIN the purpose and/or function(s) of AOP-29.0, Plant Fire and EIP-13.0, Fire Emergencies. (OPS-52521E01). EVALUATE plant conditions and DETERMINE if any system components need to be operated while performing AOP-29.0, Plant Fire and EIP-13.0, Fire Emergencies. (OPS-52521E06)
Question History:	NEW **per sample submission comments/suggestion of Chief Examiner.**
K/A match:	PT 1) is directly related to recall of AOP-29.0 PURPOSE statement and STEP 1 NOTE in which states that it shall be performed in conjunction with other plant procedures (specifically E-0). CE PREVIEWED a version of this question during the sample submission and suggested this PT 2. PT 2 does NOT match the KA, however, NUREG Appendix B paragraph C.2.f permits this condition: "[...] **distractors may include secondary pieces of information that have lower relative importance** and discriminatory value than the key point of the distractor." **PT 1 of the sample was retained since this is the KA match-up**.
SRO justification:	N/A

55. 068A4.04 055/NEW//MEM 3.8/3.7/068A4.04/N/2/FIX 2.7/

Which one of the following describes how the automatic closure of RCV-18, WMT DISCH TO ENVIRONMENT, is tested prior to commencing the release per SOP-50.1?

A. The OPERATION SELECTOR is positioned to the CHECK SOURCE position to simulate a HIGH ALARM condition.

B. The OPERATION SELECTOR will be positioned to the LEVEL CAL position, and the RANGE SELECTOR will be positioned to the HV position to simulate a HIGH ALARM condition.

C. The instrument power fuses on the front of the radiation monitor are removed and re-inserted to cause RCV-18 to trip closed.

D. The potentiometer setting is adjusted down to create a HIGH ALARM condition.

SOP-50.1, step 4.3 (and Appendix 1 & 2) performs the RADIATION MONITOR R-18 Check in the following manner:

4.3.2 Check Source is inserted to check meter upscales.
4.3.3 If the Check Source cause actuation, then RESET
4.3.4 OPEN RCV-18 from LWPP
4.3.5 **Lower the potentiometer setting until R-18 actuates.**
4.3.6 Verify RCV-18 closed at LWPP
4.3.7 Verify RCV-18 will not OPEN at LWPP [...]

Distractor Analysis:

A. Incorrect The CHECK SOURCE may or may not cause the High alarm to actuate. Also, the CHECK SOURCE is performed PRIOR to opening RCV-18.

Plausible: IF the CHECK Source were strong enough or the setpoint on RE-18 low enough, the HIGH ALARM condition may occur during the CHECK source activity and this may cause actuation of RCV-18 if it were open.

B. Incorrect This is not directed by SOP-50.1, LEVEL CAL position is only for instrument calibration tests.

Plausible: While in LEVEL CAL, it is possible to create an output that could be > the Alarm setpoint. If this position were selected and the output were greater than setpoint it is possible that the RCV-18 would receive a trip signal.

C. Incorrect This action is not direct by SOP-50.1.

Plausible: SOP-45 allows removal of the Instrument power fuses temporarily to resolve a condition in which a radiation monitor is "SATURATED". IF this were done RCV-18 would go closed.

D. Correct Per step 4.3.5 of SOP-50.1.

K/A: 068A4.04 Liquid Radwaste System (LRS)—**Ability to manually operate** and/or monitor **in the control room: Automatic isolation**

Importance Rating:	3.8	3.7
Technical Reference:	FNP-1-SOP-50.1, v69.5	
References provided:	None	
Learning Objective:	**RELATE AND IDENTIFY** the operational characteristics including design features, capacities and protective interlocks for the components associated with the Liquid and Solid Waste System, to include the following (OPS-40303A02)	
Question History:	NEW	
K/A match:	TESTING the RCV-18 automatic closure is performed via OPERATING the RE-18 Radiation monitor potentiometer. There are NO means to MONITOR the Automatic Operation of the LWP System within the MCR beyond the Alarm functions of the RE-18.	
SRO justification:	N/A; system knowledge.	

56. 073A2.01 056/MOD/FNP 2008/C/A 2.5/2.9/073A2.01/N/2/FIX 2.1/

Unit 1 is at 100% power with the following conditions:

- A Train is the ON-SERVICE Train.
- B Train CCW is running to support charging pump operations.
- The power supply to R-17B, CCW SUCTION TRN A, drawer has failed.

Which one of the following completes the statements below?

RCV-3028, CCW SRG TANK VENT, _(1)_ automatically close.

The required actions are to _(2)_.

	(1)	(2)
A.	does NOT	close RCV-3028 and cycle RCV-3028 and document in the Control Room Log once every eight hours
B.	does NOT	close RCV-3028 and Shift to B Train as the ON-SERVICE Train
C.	DOES	cycle RCV-3028 and document in the Control Room Log once every eight hours
D.	DOES	shift to B Train as the ON-SERVICE Train

FNP-1-ARP-1.6, v68.0, for window FH1 states:

The radiation monitors fail to a 'High Radiation' condition on a loss of instrument and/or control power that will result in the actuation of associated automatic functions. (PROBABLE CAUSE #2; pg 1 of 12).

R17A or B: (Component Cooling Water) closes [...]RCV-3028, CCW SRG TANK VENT. (AUTOMATIC ACTION 1.C; Pg 1 of 12).

IF CCW surge tank vents are closed for reasons other than an actual high radiation alarm, THEN with Shift Supervisor concurrence, the CCW surge tank vents should be cycled once every shift (eight hours) and documented in AutoLog. (STEP 4.17 NOTE; PG 11 of 12)

Distractor Analysis:

A. Incorrect 1) see above;

Plausible: if one were to incorrectly assess the monitor would fail to a LOW condition when power was lost and/or not aware of this automatic response of RCV-3028.

2) This is the correct action should the automatic action fail or per step 4.17.1.

B. Incorrect 1) See A.1

2) RCV-3028 will automatically close and Swapping CCW trains is NOT necessary.

Plausible: swapping trains **would provide radiation monitoring for the loads on the CCW miscellaneous header** which has several coolers in radioactive liquid systems, **but they are all non-tech spec loads, and operability a rad monitor for the on-service train is not required.**

C. Correct see above.

D. Incorrect 1) See above
2) See B.2

K/A: **073A2.01 Process Radiation Monitoring (PRM) System**— Ability to (a) predict the **impacts of an Erratic or failed power supply** on the PRM system; and (b) based on those predictions, use procedures to correct, control, or mitigate the consequences of those malfunctions or operations.

Importance Rating: 2.5 2.9

Technical Reference: A181000, v24
FNP-1-ARP-1.6, v68.0

References provided: None

Learning Objective: DEFINE AND EVALUATE the operational implications of normal / abnormal plant or equipment conditions associated with the safe operation of the Radiation Monitoring System components and equipment, to include the following (OPS-40305A07):

- Normal control methods
- Abnormal and Emergency Control Methods
- **Automatic actuation including setpoint**
- **Protective isolations**
- **Protective interlocks**
- Actions needed to mitigate the consequence of the abnormality.

Question History: MOD FNP Bank (CCW-52102G07 006); **FROM FNP 2008 Exam** for 0082.04; modified the failure to match the KA, changed the answer from A to C.

K/A match: This meets the KA since there is a failed PRM (CCW flow) rad monitor power supply;
a) PREDICTION=automatic actions
b) PROCEDURE = required response.

SRO: N/A.

1. RMS-40305A07 035/HLT//C/A 2.7/3.2/073A2.02////

Unit 1 is at 100% power with the following conditions:

- A Train CCW is the "On Service" train.
- B Train CCW is running to support charging pump operations.
- R-17B, CCW SUCTION TRN A, (RED) LOW Alarm light is LIT.

Which one of the following will result from this failure and what are the procedural actions the Operating Team is required to perform while R-17B is out of service?

A. ✓
- CCW Surge Tank Vent Valve, HV-3028, does **NOT** close.
- Close HV-3028 and cycle HV-3028 and document in AutoLog once every eight hours.

B.
- CCW Surge Tank Vent Valve, HV-3028, does **NOT** close.
- Close HV-3028 and place B Train CCW on service.

C.
- CCW Surge Tank Vent Valve, HV-3028, closes.
- Cycle HV-3028 and document in AutoLog once every eight hours.

D.
- CCW Surge Tank Vent Valve, HV-3028, closes.
- Place B Train CCW on service.

MOdified failure to match the KA; which changes the response.

Question 024

R-17A/B = FNP equivalent.
FH1 and SOP-45 AND SOPO
NO plausible/discrimatory
procedure selection available
FNP.-- use actions requried p
FH1 instead... see bank
modification.

With Unit 2 at 100% power, the following conditions exist:

- Train A equipment is in operation.
- The power supply to 2EMF46A, Train A Component Coo

Which ONE (1) of the following describes the impact of this event, AND what procedure will be used to address the situation?

A. KC-122, Component Cooling Water Surge Tank Vent, will auto close;
Address Annunciator Response for 2RAD-1/A-4 2EMF 46A Train A KC Hi Rad.

B. KC-122, Component Cooling Water Surge Tank Vent, will auto close; Address AP/2/A/5500/21, Loss of KC or KC System Leakage.

C. ONLY a Main Control Board alarm will occur;
Address Annunciator Response for 2RAD-1/A-4 2EMF 46A Train A KC Hi Rad.

D. ONLY a Main Control Board alarm will occur;
Address OP/2/A/6400/005, Component Cooling Water System, to swap KC Trains.

57. 076K2.08 057/FNP BANK/FNP 2006/MEM 3.1/3.3/076K2.08/N/2/HBF/GTO/

Which one of the following describes the power supplies for Unit 1 MOV-515, SW TO TURB BLDG ISO A TRN?

600V AC MCC _(1)_, which is normally supplied by the _(2)_ Startup Transformer.

	(1)	(2)
A.	1N	1A
B.	1T	1B
C.	1N	1B
D.	1T	1A

From A-506250, v68 MOV-515-A, SW MOV V515, is powered from the 1A SU transformer via: 1F 4160V bus, via 1H 4160V bus, via 600V LC 1R, via MCC 1N.

Which in turn is powered from 1H 4160V

Distractor Analysis:

A: Correct - per load list.

B: Incorrect These are 'B' Train power supply scheme.
Plausible: There are Four MOVs isolating each SW header.
MOV-515/517 are **A train powered**, but are located in OPPOSITE mechanical trains-- MOV515 is in the A Train SW Flowpath, whereas the MOV517 is in the B Train SW flowpath. This configuration Mechanical vs Electrical frequently results in reversing the power supply train configuration.

C: Incorrect - Correct MCC, but Wrong SU transformer. Plausible: see B plausibility for train designation/identification issue; Further, if one incorrectly assessed the 4160V power supply to the MCC, (ie A or B/C buses) on Each UNIT is reversed.

D: incorrect - Wrong MCC but correct 'A' power supply scheme.

Plausibility justified since there are four SW isolations and the train alignment for each is easily confused. Empirical/statistical data demonstrates plausibility for each.

K/A: **076K2.08** Service Water System (SWS) - Knowledge of bus **power supplies to ESF-actuated MOVs.**

Importance Rating: 3.1 3.3

Technical Reference: A-506250, v68

References provided: None

Learning Objective: **RELATE AND DESCRIBE** the effect(s) on the Service Water System for a loss of an AC or DC bus, or a malfunction of the Instrument Air System (OPS-40101B06)..

Question History: FNP Bank (SW-40101B06 001); 2006 NRC

Comments: Q1P16V0515-A is an ESF valve that throttles to 16° open on an LOSP (Closed on an SI) to ensure SW is not diverted around ESF components into the Turbine building.

Removed Location -- Provided no bearing on answer/may be considered a cue.

K/A match: This is a direct knowledge of ESF MOV power supply question for the Service Water system.

SRO; N/A

58. 078A4.01 058/MOD/FNP 2006/MEM 3.1/3.1/078A4.01/N/2/FIX 2.7/

Unit 1 has experienced a rupture in the **service air header**. The following sequence of events occurred:

- Service Air has automatically isolated.
- Instrument Air pressure has returned to normal.

Which one of the following states the air pressure as indicated on the Main Control Board?

	PI-4004A, SERVICE AIR PRESS	PI-4004B, INST AIR PRESS
A.	0 psig	110-125 psig
B.	90-105 psig	90-105 psig
C.	110-125 psig	110-125 psig
D.	0 psig	90-105 psig

From KD1/KD2, V901 AUTO closes at 80 psig IA header pressure.
Once the break is isolated, by automatic closure of V901, in the service air header the pressure in the instrument air header will return to normal so PI-4004B will indicate normal instrument air pressure.

PI-4004A, is downstream of V901, SERVICE AIR ISOL, valve (D170131, v29.0, location H-9), and therefore will be 0 psig.

From SOP-31.0, v74.0 step 4.1.10, Normal IA header pressure will be **between 90 and 106 psig** depending on the Lead Compressor's MODE of operation. Also it provides the following guidance: The recommended Pmax setting is 106 psig. T**he maximum working pressure of the air compressors (125 psig)** must never be exceeded.

NOTE: the normal band vs distractor bands are equalized at 15 psig bands each for plausibility.

Distractor Analysis:

A - Incorrect 1) See above
2) This is above the "NORMAL" pressure bands of IA.

Plausible: This answer choice would be selected if the NORMAL pressure band for instrument air was incorrectly recalled to be between 106 (normal) and 125 psig (MAX working pressure).

B - Incorrect 1) Due to location this instrument would be isolated from IA header.
2) See D.2

Plausible: This answer choice/combination would be selected if one incorrectly identified the location of PI-4004A — on the SUPPLY to V901 (upstream) and the Normal pressure band for Compressed Air was properly recalled.

C - Incorrect 1) see B.1
2) see A.2

Plausible: This answer would be selected if BOTH NORMAL IA pressure and the location of PI-4004A with relation to V901 were improperly recalled.

D - Correct, 1) See above; due to the location of **PI-4004A it is isolated from IA supply and** connected to the rupture, therefore it would read 0 psig.
2) see above; this represents NORMAL IA pressure.

K/A: **078A4.01 Instrument Air**—Ability to manually operate and/or **monitor in the control room: Pressure gauges**

Importance Rating:	3.1 3.1
Technical Reference:	FNP-1-SOP-31.0,v74.0 FNP-1-ARP-1.10, v70.0 D170131, v29.0
References provided:	None
Learning Objective:	SELECT AND ASSESS the following instrument/equipment response expected when performing Compressed Air System evolutions including the fail condition, alarms, and trip setpoints to include those items in Table 2, Instrumentation and Control (OPS-52108A03).
Question History:	MOD (COMP AIR-52108A03 001); 2001, 2004, 2006 NRC EXAM— modified due to (2 implausible distractors) Changed PT 2 to address "what is NORMAL Compressed Air pressure".
K/A match:	MONITOR Control Board IA pressure instruments for expected response following auto-isolation and recognition of restoration to "NORMAL".

MODIFIED from previous NRC use (2001, 2004, 2006) due to facility author unable to provide justification for plausibility of 0 psig on PI-4004B.

OVERLAP DISCUSSION: 079K4.01 Also challenges the X-tie with SA header. The facility author does NOT believe that these are overlap for the following reasons:

This question 078A4.01: identifies an isolation of SA does OCCUR, this does not conflict with 079K4.01 which also implies this same isolation occurs.

This question 078A4.01, does NOT identify the response of the rest of the system, which allows for ALL other components to actuate, before or after the SA header isolates; therefore all choices of 079K4.01 are still possible.

The condition of this question 078A4.01 could exist even if ALL other components were to actuate. IF all other systems were automatically isolated, and the Service air header were last or first or somewhere in the middle. system pressure would restore as stated; independent of the other actuations.

1. COMP AIR-52108A03 001/HLT//M (LEVEL 1) SYS/078A4.01////

A rupture occurred in the service air header. Air pressure decreased and resulted in the isolation of service air. After the isolation, instrument air header pressure returned to normal.

Which ONE of the following describes what the air pressure indicators on the Main Control Board, PI-4004A, "SVC AIR PRESS," and PI-4004B, "INST AIR PRESS," should indicate?

MODIFICATION REQUIRED: <2 IMPLAUSIBLE distractors.

A. 0 psig on both PI-4004A and PI-4004B.

B. 90 -100 psig on both PI-4004A and PI-4004B.

C. 90 -100 psig on PI-4004A and 0 psig on PI-4004B.

D✓ 0 psig on PI-4004A and 90 -100 psig on PI-4004B.

59. 078K2.01 059/FNP BANK/FNP-NO NRC/MEM 2.7/2.9/078K2.01/N/2/HBF/GTO/

Which one of the following states the normal power supply for the **2B Station Service Air Compressor?**

A. 600V LC 2A

B. 600V LC 2G

C. 600V LC 2Q

D. 600V MCC 2B

Plausibility analysis:

A - Incorrect - The 2C Instrument Air compressor is powered form 600V LC 2A.

B - Incorrect - The 2A Instrument Air compressor is powered form 600V LC 2G.

C - Correct - The 2B Station Service Air *(AKA: Instrument Air)* compressor is powered from 600 V LC 2Q.

D - Incorrect - The 2B **Emergency Air** compressor is powered from the 600V MCC 2B.

"NORMAL" is required since the 2F LC may also provide power to the Air compressor.

K/A: 078K2.01—**Instrument Air System (IAS): Knowledge of bus power supplies to the Instrument air compressors.**

Importance Rating:	2.7	2.9
Technical Reference:	FSD A181012, rev 18.0	
References provided:	None	
Learning Objective:	NAME AND IDENTIFY the Bus power supplies, for those electrical components associated with the Compressed Air System, to include those items in Table 1- Power Supplies (OPS-40204D04).	
Question origin:	FNP Bank (COMP AIR-40204D04 003)	
K/A match:	Knowledge of the 600V Power supply to the 2B air compressor is necessary to answer this question.	
SRO justification:	N/A	

60. 079K4.01 060/FNP BANK/FNP-NO NRC/MEM 2.9/4.1/079K4.01/N/2/FIX 2.7/

Which one of the following Unit 1 service air/instrument air system valves will be the FIRST to reposition on a DECREASING instrument air header pressure?

A. V-901, SERVICE AIR HDR AUTO ISO

B. V-902, INST AIR DRYER AUTO BYPASS

C. V-903, ESSENTIAL IA HDR AUTO ISO

D. V-904, NON-ESS IA HDR AUTO ISO

FSD 181012 and AOP-6.0, v39.0, state the sequence on a lowering pressure will occur as follows:

1. V-901, SERVICE AIR ISOLATES AT 80 PSIG FALLING
2. V-902, INST AIR DRYERS ARE BYPASSED AT 70 PSIG FALLING
3. V-903, INST AIR TO SERVICE BLDG ISOLATES AT 55 PSIG FALLING
4. V-904, INST AIR TO TURBINE BLDG ISOLATES AT 45 PSIG FALLING

A. Correct See above
B. Incorrect Plausible since the DRYER is a high probability of failure.
C. Incorrect Plausible since one may consider the TB and outside areas as NON-vital.
D. Incorrect Plausible since NON-ESSENTIAL header may

K/A: 079K4.01 Station Air System (SAS) **Knowledge of SAS design feature**(s) and/or **interlock(s)** which provide for the following: **Cross-connect with IAS**

Importance Rating: 2.9 3.2

Technical Reference: AOP-6.0, V39.0

References provided: None

Learning Objective: DEFINE AND EVALUATE the operational implications of normal / abnormal plant or equipment conditions associated with the safe operation of the Compressed Air System components and equipment, to include the following (OPS-40204D07):.

Question History: FNP Bank (COMP AIR-40204D07 005)

K/A match: ONLY IA to SA X-conn design feature/interlock = auto isolation @ 80 psig. (first isolation which occurs).

<u>Evaluated overlap with the following questions:</u>

005A2.02--AOP-6.0 entry conditions based on single valve control

065AK3.03- partial LOSS of AIR consequence

078A4.01-- MCB instrumentation for the same malfunction
Facility author believes that these questions are very closely related but are different enough. See NOTES for 078A4.01 for more detailed discussion.

078K2.01-- power supply to the 2B air compressor.

SRO justification: n/a

61. 103A3.01 061/NEW/N/A/MEM 4.3/4.7/103A3.01/N/3/FIX 2.7/

Unit 1 is at 100% power when the following error occurs:

- During replacement of a faulty MCB Phase A handswitch, a MANUAL Phase A signal is inadvertently generated.

Which one of the following completes the statements below?

CTMT Mini-Purge supply and exhaust fans _(1)_ stop.

The _(2)_ will be isolated.

	(1)	(2)
A.	will NOT	Control Room Ventilation System (HV-3649A/B/C, HV-3622, HV-3623)
B.	will NOT	SGBD Sample isolations from containment (HV-3328, HV-3329, HV-3330)
C.	WILL	Control Room Ventilation System (HV-3649A/B/C, HV-3622, HV-3623)
D.	WILL	SGBD Sample isolations from containment (HV-3328, HV-3329, HV-3330)

From A181007,paragraph 2.7.1.2 states:

The containment Ventilation Isolation isolates containment atmosphere from the environment to limit the release of radioactive fission products in the event of an accident. This function is actuated on:

- completion of the SI logic,
- high radioactivity levels in the purge exhaust (RE-24A/B), or
- **MANUAL initiation** of either PHASE A or PHASE B.

From A181003, 2.2.1.3 & 2.2.1.4 states, "**Automatic containment isolation valves shall actuate to close when isolations signals** are received from [... those signals listed above...]." SEE also figure 8 Logic diagram.

EEP-0, attachment 2 step 6.3, will **direct the operator to secure the mini-purge supply and exhaust fans.**

FSD 181003,states HV3328, HV3329, and HV3330 are part of the Containment Isolation system (para 3.16.2.5) and they will Auto isolate on the following signals **(para 3.16.1.2)**

- R-19, SGBD/Sample Rad monitor, HI Alarm (ARP-1.6)
- AFW actuation signal (SG level, or B1F/B1G sequencer actuation, or trip of Both SGFPs)

FSD 181006, states, "During accident conditions, the [Control Room] normal supply ventilation is shut down and the **control room dampers isolate on a phase A containment isolation actuation signal (CIAS)."**

Distractor Analysis:

A. Correct. 1) These fans DO NOT trip on CVIS.
2) See Above, the normal supply and ventilation is shutdown and the control room dampers isolate on a Phase A CIAS *(or RE-35A/B HIGH Alarm)*. Following a Phase A CIAS, both trains of the emergency pressurization system and recirculation filtration units are also automatically started to support the control room habitability requirements (must be manually started following a RE-35A/B actuation).

B. Incorrect 1) see A.1,
2) See above; SGBD Sample isolations from Containment are part of the Containment Isolation system, however do not actuate on a Phase A signal; This is because the SG integrity itself is accounted for in the containment Isolation design.

Plausible: The SGBD sample lines ISOLATE upon any AFW start, which include a SI actuation. Under an SI actuation signal, the Phase A CIAS and the AFW start signal occur relatively simultaneously and therefore can easily be presumed (incorrectly) linked.

C. Incorrect 1) See Above. These fans do not automatically trip, although their flowpath is isolated.
2) Manual Phase A does Actuate PRF.

Plausible: Since the dampers DO shut, these fans will be running without a flowpath. It would seem logical that they automatically trip either directly from the CIAS or due to damper position. This answer combination would be selected if one recalls correctly that CIAS alone will actuate the CRIS but incorrectly assesses the operation of the mini-purge fans. The Main Ctmt purge exhaust fans trip on High temperature from the temperature switches in the duct work. This also makes this a plausible reason that the fans may secure.

D. Incorrect 1) See C.1
2) See B.2

Plausible: This answer combination would be selected if one incorrectly recalled that the mini-purge fans operated, and assumed that SGBD sample lines were also isolated by the CIAS phase A signal vs the CRIS.

K/A: 103A1.03 **Containment System**—Ability to **monitor automatic operation** of the containment system, including **Containment isolation**

Importance Rating:	4.3 4.7
Technical Reference:	A181003, v24 A181006, v22 A181007, v18 FNP-1-EEP-0, v43.0 FNP-1-SOP-60, v35.0
References provided:	None
Learning Objective:	SELECT AND ASSESS the following instrument/equipment response expected when performing Containment Ventilation and Purge System evolutions including the fail condition, alarms, and trip setpoints to include those items in Table 5- Alarms and Annunciators (OPS-52107A03).
Question History:	NEW
K/A match:	KA match achieved since evaluation of the CTMT ventilation system and the Control Room Isolation/Ventilation system responses to an inadvertent Phase A actuation. Requires knowledge of the various actuations which occur following a Phase A signal.
SRO justification:	N/A

62. G2.1.1 062/BANK/TURKEY PT 2010/MEM 3.8/4.2/G2.1.1/N/2/FIX 2.7/

Which one of the following completes the statements below, in accordance with NMP-OS-007-001, Conduct of Operations Standards and Expectations?

The Operator At The Controls __(1)__ permitted to utilize the computer to generate a Control Room Log entry.

The SRO assigned the role of Control Room Command Function __(2)__ permitted to assume the Operator At The Controls position if it becomes necessary for the operator currently assigned that position to perform other duties within the Control Room Area.

	(1)	(2)
A.	IS NOT	IS NOT
B.	IS NOT	IS
C.	IS	IS NOT
D.	IS	IS

NMP-OS-007-001, v 10.0 paragraph 6.11.2.1- describes the OATC as follows:

A single on-shift licensed operator is designated as the operator "at the controls" for each reactor unit. This reactor operator remains alert and attentive to control board indications at all times. **Unnecessary distractions and ancillary duties are avoided** so that there is no interference with this reactor operator's prime responsibility.

This same paragraph also assigns the following responsibility to the OATC:

- **Identifies and documents deficiencies** in control board indications or controls

REGARDING computer use, the following guidance is available:

6.17.2 provides the following guidance:

Operators monitoring the control board must maintain due diligence. T**hey must avoid lengthy distractions** from their primary function of monitoring the control board. **This includes** lengthy telephone conversations and **time spent at the computer**

The OATC is allowed to use PC software required to perform license tasks. **ONE such example listed** is:

- **Operator Logs**

Paragraph 6.10.2.1 continues to state, **"If the OATC must leave the Control Room Operating Area (CROA), a qualified operator on shift relieves him.** With regard to turnover to the individual with the COMMAND FUNCTION (This individual would meet

the qualification requirements), AND this turnover is NOT explicitly prohibited by procedure, however paragraph 6.4 states:

> Technical Specifications for all three sites require **at least one dual unit active licensed SRO to be present in the Control Room envelope at all times** (FNP Commitment 5989). **One such person shall be designated as having the control room command function.** This is typically the Shift Manager and this command function shall be turned over prior to the SM leaving the Control Room envelope.
>
> **TS ALSO requires**, ONE OATC per unit. Therefore if a SINGLE SRO were to assume both positions (command and OATC), then the Control Room Staffing would NOT be in compliance with TS. ***Specifically*** IF THE OATC LEFT the Control Room Operating Area, when the staffing is at the minimum required by TS (2 OATC, 1 UO, 1 SRO-- 4 bodies within the CROA) then the crew would be one (1) body short.

Additionally, paragraphs 6.4 assigns the "OVERSIGHT" responsibility to the individual with the COMMAND FUNCTION, and this person **"does not manipulate plant equipment or silence alarms"** which would be a requirement of the OATC position.

Distractor Analysis:

A. Incorrect 1) This action is specifically listed as "PERMITTED", and assigned as a responsibility of the OATC.

Plausible: plant practice will normally defer this type of activity to other plant operators, such that the OATC can "minimize distraction".

2) See Above.

B. Incorrect 1) See A.1
2) See above discussion.

Plausible: SRO's are qualified to assume the OATC position, and 6.11.2.1 only requires a "qualified operator"; further the procedure does not EXPLICITLY prohibit this turnover.

C. Correct See Above

D. Incorrect 1) See above
2) See B.2

K/A: G2.1.1 Knowledge of conduct of operations requirements

Importance Rating:	3.8 4.2
Technical Reference:	NMP-OS-007-001, v10.0
References provided:	None
Learning Objective:	STATE AND EXPLAIN the general functions that personnel assigned to shift operations perform or are prepared to perform (SOER 96-01) (OPS40502H03).
Question History:	Bank (new to FNP); Turkey Point 2010.
Comments:	Changes are only to question format and plant specific information.
K/A match:	Knowledge of what is allowed procedurally to be done in the control room is tested and this issue is an industry concern during this class.
SRO:	N/A

Question 66

In accordance with NAP-402, Conduct of Operations, which ONE of the following identifies:

1) an example of an activity the RO "at the controls" is allowed to perform and
2) whether a person in a licensed supervisory position, such as the Unit Supervisor (US) assigned to command and control responsibilities, is allowed to assume the operator "at the controls" position if it becomes necessary for the operator "at the controls" to perform other duties?

A. 1) answering phone calls / radio transmissions
2) Is allowed

B. 1) reviewing clearances
2) Is allowed

C. 1) answering phone calls / radio transmissions
2) Is NOT allowed

D. 1) reviewing clearances
2) Is NOT allowed

minor modification

Question 66

K/A G2.1.1
Knowledge of conduct of operations requirements

CFR/IR
41.10 3.8/4.2

Reference:
1. NAP-402 Attachment D section 4.5 rev. 9

The RCO at the controls is specifically allowed to perform certain tasks, including answering the telephone and radio transmissions; reviewing ECOs is not in that list and would detract from the operator's ability to monitor the boards. The US with command and control may not assume "at the controls" responsibility

Question history:
New

Correct answer: C

A. Incorrect IAW above discussion. Plausible – SROs are allowed to assume "at the controls".

B. Incorrect IAW above discussion. Plausible – RO at the controls is allowed to perform limited tasks. SROs are allowed to assume "at the controls".

C. Correct IAW above discussion.

D. Incorrect IAW above discussion. Plausible – RO at the controls is allowed to perform limited tasks.

Cog / LOD: Memory or Fundamental Knowledge / 3

Lesson and objective: 6900050 EO2

63. G2.1.4 063/MOD/FNP-NO NRC/MEM 3.3/3.8/G2.1.4/N/2/MAJOR MOD-V1/

A proficient and qualified Reactor Operator was assigned to the Work Control Center on December 16 of the previous year.

That individual is required to return to cover shift on May 10 of this year.

Which one of the following states the **MINIMUM** requirements for this individual to maintain/activate their license in accordance with NMP-TR-406, License Administration, in the FIRST QUARTER of this year?

A. ✓ The individual must be solely responsible for either an OATC or UO position for five (5) shifts of 12 hours.

B. Stand 40 hours as under-instruction with another proficient OATC or UO AND must also include a plant tour documented in the Control Room Log.

C. The individual must be solely responsible for either an OATC or UO position for seven (7) shifts of 12 hours.

D. Stand 56 hours as under instruction with another proficient OATC or UO AND must also include a plant tour documented in the Control Room Log.

The Licensed Operator shall be responsible for the following: Ensuring they are qualified prior to performing Licensed Operator duties. (5.7 of NMP-TR-406) The Active Licencsed Operator is required to complete a NMP-TR-406-F01 quarterly.

NMP-TR-406, v3.0 paragraphs 6.5.2 state the following:

> licensed operators are required to maintain their proficiency by actively performing the functions of an operator or senior operator on at least seven 8-hour or **five 12-hour shifts per calendar quarter.** [...]

Distractor Analysis:

A. Correct — See above. The individual was proficient the previous quarter; and only needs to stand five 12 hour shifts before the end of Mar to **maintain** his/her proficiency.

B. Incorrect — This describes the requirement to **"RE-ACTIVATE" or Re-gain proficiency**. Plausible: per Section 6.6 and would be required if the individual had lost proficiency the previous Quarter.

C. Incorrect — This would satisfy the requirements to maintain his/her proficiency but this is NOT the ***MINIMUM*** requirement.

Plausible: This would be the minimum number of **8 hour shifts**.

D. Incorrect — This is the MINIMUM hours required (7 X 8 hour = 56 hours) of 8 hour shifts, however, the UNDER INSTRUCTION of another PROFICIENT watchstander is NOT required.

Further the Under Instruction would not meet the intent of the requirement. See paragraph 6.5.2, "***Overtime as an extra "helper"*** after the official watch has been turned over **to another watch stander does not count** toward proficiency time."
(IF TWO watch standers "SHARE" the responsibility of the watchstation, then the UNDER instruction is technically a "helper".)

K/A: G2.1.4 Knowledge of individual licensed operator responsibilities related to shift staffing, such as medical requirements, "no-solo" operation, maintenance of active license status, 10CFR 55 etc.

Importance Rating:	3.3 3.8
Technical Reference:	NMP-TR-406, v3
References provided:	None
Learning Objective:	STATE AND EXPLAIN the general functions that personnel assigned to shift operations perform or are prepared to perform (SOER 96-01) (OPS40502H03).
Question History:	MOD (FNP bank PLT OPER-40502H04 001);
K/A match:	RO required knowledge/responsibility for maintaining proficiency/license.
SRO:	N/A

1. PLT OPER-40502H04 001/HLT//M (LEVEL 1) PROC/G2.1.4////
Which one of the following is the MINIMUM number of shifts, that you must actively perform operator functions in order to maintain a license in an active status per 10 CFR 55, "Operators' Licenses"? ASSUME 8 hour shifts.

A. 5 shifts per calendar quarter.

B. 5 shifts per calendar year.

C. 7 shifts per calendar quarter.

D. 7 shifts per calendar year.

modified stem and answer choices.

64. G2.2.40 064/FNP BANK/FNP 2004/MEM 3.4/3.7/G2.2.40/N/2/HBF/GTO/

Unit 1 is in MODE 1. The following conditions are reported:

- STP-9.0, RCS LEAKAGE TEST, has been completed.
- A 2.5 gpm leak rate has been determined.
- PRT level is rising.

Which one of the following completes the statement below in accordance with TS 3.4.13, RCS Operational LEAKAGE?

The leakage is defined as __(1)__ leakage and __(2)__ within limits.

	(1)	(2)
A.	Identified	is NOT
B.	Unidentified	is NOT
C.✓	Identified	IS
D.	Unidentified	IS

From TS section 1.1 , Operational Leakage definitions are as follows:

a. **Identified LEAKAGE**:
   1. **LEAKAGE, such as that from pump seals or valve packing (except reactor coolant pump (RCP) seal water injection or leakoff), that is captured and conducted to collection systems or a sump or collecting tank;**

   2. [...]

b. **Unidentified LEAKAGE:** *All LEAKAGE (except RCP seal water injection or leakoff) that is not identified LEAKAGE;*

c. Pressure Boundary LEAKAGE: LEAKAGE (except SG LEAKAGE) through a non-isolable fault in an RCS **component body, pipe wall, or vessel wall.**

<u>Distractor Analysis:</u>

A. Incorrect 1) See definitions above.
2) IDENTIFIED leakage LIMIT is 10 gpm; (2.5 gpm < 10 gpm)

Plausible: **UNIDENTIFIED limit is 1 gpm.; (2.5 gpm > 1 gpm)**

B. Incorrect 1) See definitions above.
2) See A.2

Plausible: incorrectly assessing the type of leakage but correctly assessing the limit for that type.

C.Correct 1) Because it is being collected into a tank it qualifies as **Identified leakage.**

2) The LIMIT is 10 gpm.

D.Incorrect 1) See B.1
2) LIMIT for IDENTIFIED leakage is 10 gpm.

Plausible: incorrectly identifying the type and incorrectly aligning the leakage limit of IDENTIFIED leakage to that type.

K/A: G2.2.40 Ability to apply Technical Specifications for a system.

Importance Rating:	3.4	3.7
Technical Reference:	TS 1.1. TS 3.4.13	
References provided:	None	
Learning Objective:	Identify and apply the following Technical Specifications or TRM requirements, including the bases and attendant equipment, associated with the Reactor Coolant System (OPS52101A01). • TS 3.4.13 RCS Operational LEAKAGE	
Question History:	BANK AOP-1.0-52520A10 004; FNP 2004-- altered pt 2 to address recent FNP OE regarding "continued operation with leakage within TS limits for extended periods (both unit 1 and 2 Spray).	
Comments:	Discuss with CE: IT IS **NOTED that this is** Tier 3 question-- SEE NUREG 1021, ES 401-D.2.a, and should not be a continuation of Systems, **However this Generic KA requires "application of TS for a SYSTEM"**.	
K/A match:	Based on reviewing available questions used on other NRC exams this is identified as the common means to match this KA. System = RCS; TS = operational leakage; Generic Tier 3 requires utilization of TS Definitions.	
SRO:	*n/a*	

1. AOP-1.0-52520A10 004/HLT//M (LEVEL 1) PROC/G2.2.40/3.4.13///

Given the following conditions:

- Plant is at 100% power.
- ~~RCS pressure is 2235 psig and Tavg is 573°F.~~
- RCS leakage through RHR discharge relief valve is leaki ~~PRT at a rate of 2.5 gpm.~~

would be lifting, RWST suction Check valve-- results in pressurizing all of RHR, suction and discharge.

Which one of the following describes the type of leakage and the by Technical Specifications?

(Assume all other systems are operating normally and no other RCS leakage)

A. Identified leakage that requires shutdown.

B. Unidentified leakage that requires shutdown.

C.✓ Identified leakage, but does not require shutdown.

D. Unidentified leakage, but does not require shutdown.

Shutdown is/is not required depends on perspective... Leakage is via checkvalves, therefore shutdown is required t fix. AOP-1.0 has crew ask SM... recent OE with spray valves sh that it is NOT permissible to live with this leakage for long duratic even though within TS limits. Change PT 2 to RAS required c not.

modified to address issues noted, however does not qualify as a significantly modified.

65. G2.2.41 065/NEW/BRUNO SUGGESTED/MEM 3.5/3.9/G2.2.41/D175009, VER 32.0/2/HBF/GTO/HIGH MISS

The WEBTOP **display for** D175009 Sheet 1 is as follows:

	Document No.	Sheet No.	Title	REVISION
•	D175009	001	Sampling System	CURRENT, 32.0
•	D175009	001	Sampling System	LATEST, 33.0

Which one of the following completes the statements below?

The provided DRAWING, D175009 Sheet 1, __(1)__ an approved version to use, per NMP-AP-001, Development and Control of Southern Nuclear Procedures.

The "T" on SV-3332, PRZR LIQ SAMPLE ISO (Location A-5) signifies that the marked valve will automatically close upon receipt of a __(2)__ signal.

REFERENCE PROVIDED

	(1)	(2)
A.	is NOT	Phase A Containment Isolation
B.	is NOT	High Penetration Room Pressure
C.	IS	Phase A Containment Isolation
D.	IS	High Penetration Room Pressure

The following screenshot displays a condition similar to that stated within this question; **The "current" version** is the version that is approved for use, **while the "latest" version** simply implies that a change is in progress on that procedure/document.

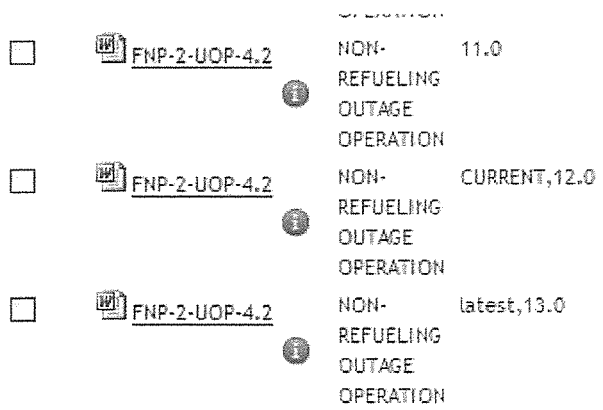

Distractor Analysis:

A. Incorrect 1) The candidate must first identify which version is correct:
—Latest does NOT specify the current approved copy, ONLY that there is a change in progress on that document, it is NOT yet approved for use.

PLAUSIBLITY: it is likely that one may reason the LATEST is the approved copy.

Then the candidate must review the DWG information boxes; to identify the version of the provided dwg (32.0) and whether or not it may be utilized without the APPROVAL signatures or DATE; This box specifies "COPY"

Plausibility: **The DWG category is CRITICAL**, and without knowledge of the allowances of NMP-AP-001, and FNP-0-DCP-1.0 then one may **reason that this "COPY" is NOT authorized for use**.

2) See C.2

B. Incorrect 1) See A.1
2) See A.2; this valve does close on this signal, however the "T" symbol does not specify this condition.

Plausible: **SV-3332** on D175009 Sh 1, ver 32.0 is marked with NOTE 9, which states that it will "[...] close on high penetration room pressure. If one were NOT aware of the significance of the "T" symbol, then the NOTE may initiate this response.

C. Correct 1) NMP-AP-001,v12.0, section 4.3.2 states that the procedure USER is responsible to "ensure procedure is the **CURRENT** LATEST version, or **CURRENT** version, of the procedure prior to use. (Although the example provided is for procedures, this is also true for changes to drawings).

2) **SEE DWG 175044**, Location F-8; the "T" designator signifies that the identified component "CLOSES on T Signal (CONTAINMENT ISOLATION, PHASE A, Derived from Safety Injection OR Manually)"

D. Incorrect 1) See C.1
2) See B.2

K/A: G2.2.41 **Ability to obtain and interpret station electrical and mechanical drawings.**

Importance Rating: 3.5 3.9

Technical Reference: NMP-AP-001,v12.0
D175009, ver 32.0
FNP-0-DCP-1.0,44.0

Learning Objective:	**Describe** the symbols used on P&IDs and mechanical Drawings. (OPS30802B01) **LIST AND IDENTIFY** the responsibilities of individual using a procedure (OPS-40504A07)
Question History:	NEW-- following implementing the suggested changes (NO LONGER RESEMBLES the Watts Barr 2009 NRC from which the sample was generated-- sample submission was identified as UNSAT due to LOD =1)
K/A match:	PT 1 OBTAIN— The candidate must demonstrate knowledge of site/corporate procedures to verify the document in hand is "APPROVED" for use. COPIES of a drawing ARE authorized for use IF verified the correct VERSION. PT 2 INTERPRET— The candidate must be knowledgeable of standard westinghouse symbolism utilized on plant drawings. NOTE TO EXAMINER--REVIEW required: **it is noted that this borders on generic fundamental level (***although it states we should avoid HIGH LEVELS of fundamental knowledge***- the NUREG does NOT PROHIBIT having fundamental knowledge questions —REF NUREG APP B, C.1.d);** The KA drives this fundamental level of questioning, and the question maintains its *"focus on plant-wide generic knowledge and abilities [...]"* ***(ES-401 D.2.a).*** *A version of this question was previewed by the Chief Examiner (sample submission) and that version was deemed UNSAT due to LOD =1, however, it has* ***since been revised to replace PT 2*** *as specifically suggested by the Chief Examiner .* ***PT 1 was also modified to raise the LOD*** *by requiring the candidate to:* *1) recognize the APPROVED revision using WEBTOP information which has proven to cause HU errors at FNP.* *2) recognize that the version provided is the approved version* *3) By having the candidate evaluate the entire drawing, this ADDS the knowledge requirement as to whether or not UNSIGNED COPIES qualify as "APPROVED for use" per site procedures.* *The CE has previewed/accepted the enhancements via*

telecom on 12/21.

SRO justification: N/A

66. G2.3.12 066/MOD/SEQUOYAH 2010/MEM 3.2/3.7/G2.3.12/N/3/FIX 2.1/

An entry into the Rx Vessel Maintenance Sump is required on Unit 1. The following description of the activity/plant conditions exist:

- No work on the Moveable Incore Detector System (MIDS) will be performed.
- The incore tubing remains connected to the seal table.
- ALL of the MIDS thimble tubes ARE INSERTED into their normal position.
- The detectors are currently stored in the shield wall.

Which one of the following identifies:

1) the location normally used to verify the current location of the detectors

   AND

2) the required method of control for the Main Power Switch on the MIDS Control Panel in accordance with RCP-0.2, UNIT 1 Reactor Vessel Maintenance Sump Entry, Appendix B?

	(1)	(2)
A.	Locally at the MID drive box in containment	Caution Tag
B.	Incore Control Panel in the control room	Caution Tag
C.	Locally at the MID drive box in containment	LHRA padlock
D.	Incore Control Panel in the control room	LHRA padlock

RCP-0.2 ver 4.0 appendix B step 1.1.5 is amplified with the following NOTE:

"[...] Storage locations are normally determined by looking at the incore control panel in the Control Room. A Caution Tag will be on the panel if a MID was not left in the storage when it was last operated. IN addition, MID drive units that have the MID removed normally have a caution tag on the Main Control Panel indicating that the MID has been removed. IF MID locations are questionable, the MID Main Control Panel can be powered up to determine current positions of MIDS."

Step 1.1.6 requires that the MID Main Control Panel power switch is secured with a "Lock Out Device to prevent the system from being operated." The preceding NOTE defines the "LOCK OUT device" as either a **DANGER Tag or a LHRA Locking Device.**

2) MID safe positions are in the **shield wall, in the Rx core**, removed from the drive unit, **or in a position where radiation surveys indicate that no radiological hazards exist to personnel working in containment or in the Rx Vessel Maintenance Sump.**

Distractor Analysis:

A. Incorrect 1) See above.
Plausible: RCP-0.2 Appendix C **has a section that says a person at the MID drive box is required if Work requires that power is periodically available to the individual MID drive unit**. "

2) Caution Tag does not provide the necessary level of protection for the workers.

Plausible: RCP-12, v17.0, Unit-1 Moveable Incore Detector (Mid) Work, requires a "Caution Tag placed on the Incore Control Panel (located in the U-1 Control Room) indicating abnormal storage location of MIDs not in storage or drive(s) which do not contain a MID." (Appendix A step 6, Appendix B step 18, Appendix C step 8)

B. Incorrect 1) See D.1
2) See B.2

C. Incorrect 1) See A.1
2) see above.

D. Correct 1) See above.
2) EITHER a LHRA padlock OR a Danger Tag (if a tagout is used the holders must be the HP Supervisor and HP shift Coordinator).

K/A: G2.3.12 Knowledge of radiological safety principles pertaining to licensed operator duties, such as containment entry requirements, fuel handling responsibilities, access to locked high-radiation areas, aligning filters, etc.

Importance Rating:	3.2 3.7
Technical Reference:	FNP-0-AP-42.0, 49.1 FNP-1-RCP-0.2, V4.0
References provided:	None
Learning Objective:	LIST AND IDENTIFY any special considerations such as safety hazards and plant condition changes that apply to the Incore Nuclear Instrumentation System (OPS-52201C14).
Question History:	MOD Bank; Sequoyah 2010 (MODIFIED part 1)
K/A match:	Radiological safety principles = requirements to control Incore detectors during containment entry, specifically the containment Maintenance Sump.

QUESTIONS REPORT
for 2010 Feb RO exam

G 2.3.12 071

Prior to an entry into lower containment being made, which ONE of the following identifies the verifications that are required relative to the incore flux detector placement and tagging?

Detector Placement	Tagged with a...
A. Storage position, only .	Caution Order
B. Storage position, only.	Hold Order
C. Storage position or inserted to within 10 feet of the core.	Caution Order
D. Storage position or inserted to within 10 feet of the core.	Hold Order

SOP-44.0 states that storin core will cause BURNOUT detectors...
HP controlled LOCK on ma power switch 4.1 of sop-44
RCP-0.2 Appendix B NOTE "Cation Tag will be used if I properly stored.

DISTRACTOR ANALYSIS:

A. *Incorrect, Storage is not he only position allowed for the incore flu can also be inserted to within 10 feet of the core. A Caution Order cannot be used to maintain the configuration control. Plausible because storage is one of the two approved positions and a Caution Order is one of the types of clearances used for tagging equipment.*

B. *Incorrect, Storage is not he only position allowed for the incore flux detectors, they can also be inserted to within 10 feet of the core. A Hold Order is used to maintain the configuration control. Plausible because storage is one of the two approved positions and tagging with a Hold Order is correct.*

C. *Incorrect, the incore flux detectors must be verified to be in the storage position or inserted to within 10 feet of the core and tagged out. A Caution Order cannot be used to maintain the configuration control. Plausible because the two locations are approved positions and a Caution Order is one of the types of clearances used for tagging equipment.*

D. *Correct, In accordance with 0-SI-OPS -000-011.0, the incore flux detectors must be verified to be in the storage position or inserted to within 10 feet of the core and tagged out. A Hold Order is used to maintain the configuration control.*

QUESTIONS REPORT
for 2010 Feb RO exam

Question Number: 71

Tier: 3 **Group** n/a

K/A: G 2.3.12
Radiation control
Knowledge of radiological safety principles pertaining to licensed operator duties, such as containment entry requirements, fuel handling responsibilities, access to locked high-radiation areas, aligning filters, etc.

Importance Rating: 3.2 / 3.7

10 CFR Part 55: 41.12 / 45.9 / 45.10

10CFR55.42.b: Not applicable

K/A Match: Question requires knowledge that the Incore flux detectors pose radiation hazards and must be properly positioned and controlled to protect personnel inside lower containment.

Technical Reference: 0-SI-OPS-000-011.0, Containment Access Control During Modes 1 through 4, Rev 34

Proposed references to be provided: None

Learning Objective:
OPT200.INCORE
5. Describe the operation of the IIS system:
   a. Precautions and limitations

Question Source:

New	X
Modified Bank	
Bank	

Question History: New question

Comments:

Source:	NEW	Source If Bank:	
Cognitive Level:	LOWER	Difficulty:	
Job Position:	RO	Plant:	SEQUOYAH
Date:	2/2010	Last 2 NRC?:	NO

67. G2.3.5 067/MOD/SEQUOYAH 2010/MEM 2.9/2.9/2/N/2/FIX 2.1/

Unit 2 is at 100% power with the following conditions:

- R-15A, SJAE EXH, radiation monitor is in alarm.
- AOP-2.0, Steam Generator Tube Leakage, is in progress.
- The leaking SG has NOT yet been identified.

Which one of the following completes the statements below?

R-15A indications _(1)_ trend down when SJAE Filtration is placed on service.

_(2)_ will be used to identify the leaking SG.

	(1)	(2)
A.	will NOT	R-60A (B,C) MS ATMOS REL
B.	will NOT	R-70A (B, C), SG TUBE LEAK DET
C.	WILL	R-60A (B,C) MS ATMOS REL
D.	WILL	R-70A (B, C), SG TUBE LEAK DET

REFER to OpsCfw008 (FIGURE 3 in OPS-52104C Lesson Plan);

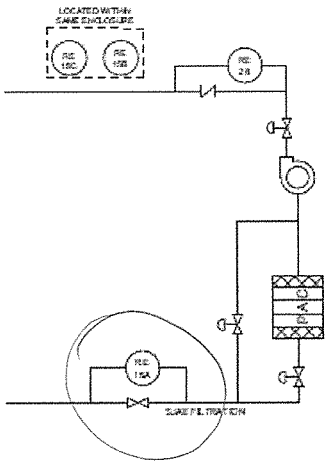

The SJAE Filtration is located downstream of R-15A sample point. Once the SJAE Filtration system is placed in service, the values of R-15B and R-15C (MID and HI range) will lower, if on-scale.

The R-70's (one per SG) will display a leak rate from each SG as low as 1 gallons per day; The Alert alarm setpoint is normally set at 5 gpd.

The R-60's (one per Atmospheric Relief/Safety Valve exhaust grouping) provide "post-accident effluent monitoring for the Steam Generator Safety Valve [...] exhaust points [...These] effluent points which monitor from normal operating levels to a maximum of 105 µCi/cc (Xenon-133 calibration) for **undiluted containment effluents and 10-1 to 103 µCi/cc." (FSD A181015 ver 14.0, section 3.3.17)**

Distractor Analysis:

A. Incorrect 1) See B.1
2) The R-60's will normally not indicate on scale for a small SG tube leak; This is because these detectors are designed for monitoring/measuring "UNDILUTED" containment effluents and the settings would be far above that for small Tube leakage that would allow remaining in AOP-2.0. Further, under normal AOP-2 response, the ARV and Safety valves would not be open therefore there would be NO flow past these Rad monitors at this time.

Plausible: These radiation monitors would provide POST-Accident monitoring from each SG. see plausibility of C.2

B. Correct 1) Due to the location of R-15A with relation to the SJAE filtration, the values will NOT be affected.
2) R-70s provide the best identification for individual SG leak detection.

C. Incorrect 1) See above
2) see above. R-70s have two modes of operation AV and ME. Normally when > 20% RX power (NI-43) these instruments will be in the AV mode of operation and capable of measuring leakage as low as 1 gpd. The R-60s will not be representative of DILUTED RCS leakage at this low value and the RELEASE POINTS being monitored would not normally have flow in an AOP-2.0 scenario.

Plausible: incorrectly recalling the information contained within SOP-69 P&Ls SOP-69.0, v5.0 P&L 3.1, states: "***IF N-43 fails OR is in Test OR is less than 20% power, THEN the [N-16 primary to secondary leak detection] system cannot accurately estimate a leak rate in the AV mode, and the indicators will display "PN <20%".***

P&L 3.2 states, "***The N-16 Leak Detection System cannot determine the location of a leak within a specific Steam Generator.*** The system can however provide a more accurate leak rate determination if the location of the leak is known to be in one of the following locations: Cold Leg - CB, Hot Leg - HB or U-Bend region - BE. WHEN a leak location is selected (CB, HB or BE), THEN the processor displays a leak rate that assumes the leak is at the location you have selected. The AV mode is essentially the average of the three leak rates at the specific locations."

KA: G2.3.5 Ability to use radiation monitoring systems, such as fixed radiation monitors and alarms, portable survey instruments, personnel monitoring equipment, etc.

Importance Rating:	2.9	2.9
Technical Reference:	OPS-52104C lesson plan fig 3 FNP-1-SOP-69.0 , v5.0 A181015 v14.0	
References provided:	None	
Learning Objective:	**RELATE AND IDENTIFY** the operational characteristics including design features, capacities and protective interlocks for the components associated with the Radiation Monitoring System to include those items in Table 4-Remote and Local Indications and Controls (OPS-40305A02)	
Question History:	MOD Bank; pt 1 from (RMS-40305A02 018); PT 2 from SEQOUYAH 2010, modification of SEQ 2010 for FNP created 2 implausible distractors, therefore created a 2+2 using FNP Bank question.	
K/A match:	Requires knowledge of how equipment alignment will affect (or not affect) monitoring capability of R-15. ALSO requires knowledge of what Radiation monitors will be utilized to determine the leak location.	
SRO:	N/A	

1. RMS-40305A02 018/HLT//C/A 21.9/3.0/039A1.10////

Given the following:

- Unit 1 is at 100% power.
- A Steam Generator Tube Leak has developed.
- R-15A, SJAE EXH, is approximately mid-scale.

Which ONE of the following describes:
(1) the R-15A indication that will be observed if SJAE Filtration is placed on service **and**
(2) the R-15A indication that will be observed if a reactor trip occurs?

R-15A _____(1)_____ when SJAE Filtration is placed on service.

R-15A _____(2)_____ if the reactor trips.

A. (1) Trends down

(2) Remains approximately stable

B. (1) Trends down

(2) Trends down

C. (1) Remains approximately stable

(2) Remains approximately stable

D. (1) Remains approximately stable

(2) Trends down

QUESTIONS REPORT
for 2010 Feb RO exam

G 2.3.5 072

Given the following:

- Unit 2 was operating at 100% power when a SG tube rupture develops.
- The reactor is tripped and SI is initiated.
- Annunciator '2-RA-90-119ACNDS VAC PMP LO RNG AIR EXH MON HIGH RAD' is in alarm.

Which ONE of the following radiation monitors could be used to determine the specific SG that developed the rupture?

A & B not plausible for FNP.

A. Observing 2-RM-90-120 (SG blowdown liquid rad).

B. Observing 2-RM-90-124 (SG sample line monitor).

C. Observing 2-RM-90-255 (Cond vacuum pump exhaust hi rad).

D. ✓ Observing 2-RM-421, 422, 423, 424 (Main steamline high rad).

DISTRACTOR ANALYSIS:

A. Incorrect, Plausible since this monitors SG rad., however point monitored is common to all SGs. Once hi rad is detected SG blowdown isolates, and rad monitor would have to be flushed with demin water to clear alarm to allow rad monitor to be placed in service again.

B. Incorrect, Plausible since this monitors SG liquid, however this monitor is common to all SGs.

C. Incorrect, Plausible since this monitors SG liquid, however this monitor is common to all SGs.

D. Correct, Operators are directed by procedure to monitor steam line rad monitors for trends to help identify affected SG.

68. G2.3.7 068/NEW/N/A/MEM 3.5/3.6/G2.3.7/N/2/FIX 2.7/HIGH MISS

Unit 1 is in a refueling outage with the following conditions:

- Fill and vent of the 1C Charging pump per Appendix F of SOP-2.1, Chemical And Volume Control System Plant Startup and Operation, is in progress.
- The operator is required to vent from the following location:
  – V464, LCV-115D OUTLET LINE VENT (above the BIT).

Which one of the following completes the statements below in accordance with Instructions For All RWP Entries?

Health Physics _(1)_ required to conduct a survey PRIOR to accessing and attaching a vent hose on V464.

Removing the pipe cap and connecting the hose to allow venting from V464 _(2)_ require continuous HP coverage.

	(1)	(2)
A.	IS	does NOT
B.	IS	DOES
C.	is NOT	does NOT
D.	is NOT	DOES

SOP-2.1 ver 126 step 4.6 requires the operator to "NOTIFY HP".
STEP 4.35, "Uncap, LCV-115D OUTLET LINE VENT, Q1E21V464 attach hose and route to suitable container or drain. (114', ovhd by BIT)"

ALL FNP RWP's contain the common instruction that states:
"There are certain worker instruction that are applicable to ALL RWPs. These instructions are provided at the Main RCA entrance."

Those instructions are also found ON the HP homepage: "INSTRUCTIONS FOR ALL RWP ENTRIES". This document states the following applicable generic requirements:

- " Health Physics (HP) **MUST be present for breaching any radiological systems."**
- " Contact HP prior to **accessing overhead areas > 8 feet above the floor."**

Because V464 is at 114', **it is 14 ft (>8 ft) from the floor, HP** does NOT routinely survey this area therefore a separate additional survey would be necessary.

Because Venting V464 would BREACH the CHG pump suction line (a contaminated sytem) then HP coverage is REQUIRED. (Continuous coverage)

Distractor Analysis:

A. Incorrect 1) See above. The valve is > 8 ft from the floor therefore the RWP will not allow access until HP conducts a survey of the area.

2) See Above: VENTING is a breach of the system.

Plausible: Without application of the "GENERIC RWP guidance", and knowledge of the OPERATIONS RWP 12-0503 which would normally be used for Draining/Venting systems. Under this RWP HP coverage is designated as "INTERMITTENT" for routine tasks but extra precautions are required when climbing and breaching a system.

B. Correct 1) See above. The valve is > 8 ft from the floor therefore the RWP will not allow access until HP conducts a survey of the area.
2) See Above: VENTING is a breach of the system.

C. Incorrect 1) Plausible: if the valve were located < 8 ft from the floor, then this would be true.
2) See A.2

Plausible: this combination is plausible if the candidate was NOT familiar with the generic RWP guidance AND not able to identify relative location (vertical height) of the BIT.

D. Incorrect 1) See C.1
2) See B.2

Plausible: this combination is plausible since it would be true for a different vent point (< 8 ft from floor within NORMAL Surveyed area). Examples include: V487, 1C Chg pump Suction Line Vent.

KA: G2.3.7 Radiation Control - Ability to comply with radiation work permit requirements during normal or abnormal conditions

Importance Rating:	3.5 3.6
Technical Reference:	FNP-1-SOP-2.1v 126.0 INSTRUCTIONS FOR ALL RWP ENTRIES
References provided:	NONE.
Learning Objective:	To Be Determined. This objective is not contained within the OPS Objective Bank. NUREG does NOT require objectives for each question.
Question origin:	NEW
Comments:	TIER 3; **Plant specific knowledge** is required to apply size knowledge of the BIT (far > 8 ft) and/or recall knowledge of the specific vent point location While maintaining a focus on GENERIC Concepts.
KA match:	requires RECALL of requirements of ALL RWPs.

69. G2.4.14 069/BANK/VOGTLE 2011/C/A 3.8/4.5/G2.4.14/N/2/MAJOR MOD-V2/HIGH MISS

A Rx trip has occurred on Unit 1, the following conditions exist:

- The Immediate Operator Actions of EEP-0.0, Reactor Trip Or Safety Injection, are complete.
- 1A SG Main Steam Safety Valve is stuck OPEN.
- 1B SG has a SGTR.
- SG NR levels are as follows:

1A	1B	1C
13%	12%	14%

Which one of the following completes the statement below in accordance with SOP-0.8, Transient Response Procedure User's Guide?

The Unit Operator is permitted to isolate AFW flow to __(1)__ prior to the step within EEP-0.0 to control AFW flow.

Obtaining Shift Supervisor's permission prior to taking action __(2)__ required.

	(1)	(2)
A.	1A SG only	is NOT
B.	1A SG only	IS
C.	1A & 1B SG	is NOT
D.	1A & 1B SG	IS

SOP-0.8, v20.0 section 4.2.7 and 4.2.8 provide the following guidance:

It is expected for the operator to perform manual actions to address failed ESF component actuations and to address foldout page items **after the immediate actions are performed.** Early operator actions should not occur until after the immediate actions are **verified** by the Shift Supervisor.

[...] crews are expected to take manual actions prior to reaching the automatic setpoint for the following ESF functions: Reactor Trip, Turbine Trip, SI and MSIV isolation. [...]

Operators are expected to take manual action to address ESF components which fail to actuate when required (with the exception of Starting a DG or closing its output breaker [...]

[...] The Shift Supervisor will be notified prior to the commencement of early operator actions.

DISTRACTOR ANALYSIS:

A. Incorrect 1) This is an appropriate response to a faulted SG; 1B SG must be filled to > 31% to cover the tubes PRIOR to isolating its AFW flow.

Plausible: Since ISOLATION of the MSIV would be permitted as it would be approaching the 601 psig setpoint without permission, then one would logically assume that isolating the AFW line would also be permitted without permission to terminate the cooldown.

2) See EARLY actions of 4.2.8.3

B. Correct 1) This is an early action for a Faulted SG (E-2)
2) since this is an early action, then SS permission IS required.

C. Incorrect 1) See A.1; isolation of AFW flow to the ruptured SG is NOT appropriate per E-0 foldout page. Narrow range level remains too low.

plausible: This action would be appropriate if level in the 1B SG were higher.

2) Isolating AFW flow to the 1A SG is an early action and needs SS permission.
Plausible: the isolation of 1B SG is a Foldout page action and would NOT require SS permission prior to taking action.

D. Incorrect 1) SEE C.1
2) see B.2; permission IS required since this would be an early action of EEP-2.

Plausible: EARLY action requires permission prior to the action.

K/A: 2.4.14 Knowledge of general guidelines for EOP usage.

Importance Rating:	3.8 4.5
Technical Reference:	FNP-0-SOP-0.8, v20.0 FNP-1-EEP-0.0, v43 FNP-1-EEP-2, v15
References provided:	None
Learning Objective:	Apply the rules of usage for the ERP's and (FRPs) (OPS52301B09).
Question History:	BANK; Vogtle 2011
K/A match:	Requires knowledge of the requirements of Early operator actions.
SRO:	N/A

70. G2.4.43 070/MOD/VOGTLE 2009/C/A 3.2/3.8/G2.4.43/N/2/FIX 2.7/CLAY REVEIW

An Alert has been declared. The Emergency Director (ED) has directed you to notify offsite agencies using NMP-EP-111, Emergency Notifications. During ROLL CALL, ONLY the following organizations answered:

- Georgia EMA (GEMA) at Atlanta EOC.
- Early County.

The ED has just handed you the approved and transmitted copy of the Electronic Notification Form.

Which one of the following describes the required response in accordance with NMP-EP-111?

ROLL CALL _(1)_ required to continue.

A BACK-UP communications system that will be used to contact any unresponsive agencies is the _(2)_ .

	(1)	(2)
A.	IS still	Emergency Notification System (ENS) phone set
B.	IS still	Commercial Telephone lines
C.	is NOT	Emergency Notification System (ENS) phone set
D.	is NOT	Commercial Telephone lines

NMP-EP-111, Checklist 2 Continuing Actions states:

The EN Form should be transmitted as soon as it is APPROVED by the ED. The EN form is transmitted when OK is selected following selection of the APPROVAL button. **Do not delay EN form preparation or transmittal to complete Roll Call.**

STEP 7 then states, "**WHEN** the Emergency Notification form has been electronically approved and transmitted, **THEN confirm receipt** of the notification using Figure 5 – Emergency Notification Receipt Confirmation or the remainder of this checklist as guidance."

STEP 8 continues to state: "**IF** ROLL CALL of the applicable Table 1 agencies is not complete **THEN** terminate roll call."

A. Incorrect 1) per step 7 and 8 of checklist 2

Plausible: without knowledge of the authorization to discontinue roll call, then normal procedural flowpath would tend cause completion of roll call prior to confirmation of receipt.

2) This is the PRIMARY notification method as listed on Table 1.

Plausible: paragraph 6.1.2 states, "Initial notification of the NRC [...] are typically performed using the Federal Telephone System (FTS). The Emergency Notification System (ENS) line is normally utilized.

B. Incorrect 1) See A.1
2) See D.2

C. Incorrect 1) See D.1
2) See A.1

D. Correct 1) roll call is NOT required to be completed prior to verifying receipt of the EN Form per steps 7 and 8 of Checklist 2.
2) per Table 1 this is a backup notification system to the Southern LINC.

KA: **G2.4.43** Emergency Procedures/Plan; Knowledge of emergency communications systems and techniques.

Importance Rating:	3.2 3.8
Technical Reference:	NMP-EP-111, v6.0
References provided:	None
Learning Objective:	EVALUATE plant conditions and DETERMINE the required notifications including time limits and methods of notification for an emergency declaration. (OPS-53002C03).
Question History:	MODIFIED FNP bank (EPIP CLASS-53002C03 015)--modified to 2+2 format similar to the 2009 Vogtle which required modification of Pt 1 due to 4 equal and correct answers, for current revision of procedure.
K/A match:	Knowledge of both the **technique utilized (termination of Roll-call)** to prepare offsite agencies for an incoming message, and knowledge of the systems (backup methods) for communicating with OFF-site agencies.
SRO justification:	NA

1. G2.4.43 001/3/N/A/ENN COMM-TECHNIQUES/C/A - 3.2 / 3.8/NEW/HL-15/RO/TNT/DS

The Emergency Director (ED) has directed you to perform an ENN roll call in accordance with 91002-C, "Emergency Notifications", checklist 4 "Directions for ENN Communicators".

- Burke County and State of Georgia have failed to respond to the initial roll call.

Which **ONE** of the following is the **CORRECT** actions to perform?

A. Transmit the notification message to the agencies that responded, inform the ED that two agencies couldn't be notified.

Southern Linc would be the next priority to establish communications.

PT 1 of all answer choices are equal and correct responses per current procedural Revision.

B. Transmit the notification message to the agencies that responded, inform the ED that two agencies couldn't be notified.

The Back-up ENN Bridge would be next priority to establish communications.

C. Promptly notify the ED of the agencies that failed to respond to the initial roll call.

Southern Linc would be the next priority to establish communications.

D. Promptly notify the ED of the agencies that failed to respond to the initial roll call.

The Back-up ENN Bridge would be next priority to establish communications.

71. G2.4.50 071/NEW//C/A 4.2/4.0/G2.4.50/N//MAJOR MOD-V2/CLAY REVEIW

Unit 1 is at 90% power with the following conditions:

- Control Rods are in manual.
- AOP-9.0, Loss Of Component Cooling Water, is in progress.
- RCP temperatures and Letdown temperatures are elevated.

Subsequently, the following annunciators come into alarm:

- DF1, LTDN TO DEMIN DIVERTED-TEMP HI
- HG1/2/3, RCP 1A(1B)(1C) BRG UPPER/LOWER OIL RES HI LVL
- HF3, TAVG/TREF DEV

Which one of the following completes the statements below?

The alarms _(1)_ REQUIRED to be announced per the transient condition alarm response guidance of NMP-OS-007-001, Conduct of Operations Standards and Expectations.

The crew will _(2)_ to return TAVG/TREF mismatch to that required by UOP-3.1, Power Operation.

	(1)	(2)
A.	ARE	Lower Turbine power
B.	ARE	Drive Rods IN
C.	are NOT	Lower Turbine power
D.	are NOT	Drive Rods IN

NMP-OS-007-001section 10.2.5 Transient Conditions states:

[...]

During emergency/abnormal conditions, alarms are silenced / acknowledged as soon as practical so as not to interfere with the transient response. **The announcement of transient alarms during Abnormal and Emergency Operating Procedures is not required.** In such cases, the operators ***are expected to announce those alarms that are of significance to the implementation of the applicable Abnormal or Emergency Operating Procedure.***

From ARP-1.8, v 35.1 HF3 alarms at **± 5°F**. Following a CCW malfunction in which **letdown cooling may be impacted**, then increased temperature on the letdown line will result in a **Boron release** from the CVCS Demineralizers.

SOP-40.0, v13.1 step 4.6 CAUTION states: "The operator should be cognizant of plant operation which will affect system temperature or reactivity such as load changes, xenon or boron concentration changes, so that proper rod movements can be made."

Because rods are in manual, operator action is required to "**Maintain** median Tavg within ± 1.5°F of Tref by rod motion in Manual." (step 4.6). However, NMP-OS-001, paragraph 6.1.2.4 would prevent outward rod motion until the plant was stable. Therefore Turbine load reduction would be necessary to Return Temperature to program.

Distractor Analysis:

A: Incorrect - 1) Plausible: if the alarms were unrelated to the AOP currently in progress then this would be true; (ie steam leak has caused the Temp deviation AOP-14; or RCP trouble AOP-4.0)

2) See above; The elevated CCW temperatures on Letdown will result in a Boration, therefore temperatures will be lower than Program. Lowering Turbine power will raise RCS temperature.

B: Incorrect 1) See A.1
2) The event would cause RCS temperature to lower,
Plausible: HF3 is a ± 5 °F temp deviation alarm, therefore if the CCW temp impact on the DEMINS were thought to cause a dilution instead (+5 vs - 5°F), this would be selected.

C: Correct See above.

D: Incorrect 1) See above
2) See B.2

K/A: G2.4.50 Emergency Procedures / Plan: **Ability to verify system alarm setpoints** and **operate controls** identified in the **alarm response manual.**

Importance Rating: 4.2 4.0

Technical Reference: NMP-OS-007-001, v9.0
FNP-1-ARP-1.8, v35.1
FNP-1-AOP-9.0,v23.0
FNP-1-SOP-40, v13.1

References provided: None

Learning Objective: STATE AND EXPLAIN the general functions that personnel assigned to shift operations perform [...] (SOER 96-01) (OPS40502H03).

DESCRIBE and EXPLAIN the conduct of reactivity changes, reactivity manipulations and the expectation for controlling reactivity as described in NMP-OS-001, Reactivity Management Program. (OPS-53203P01)

STATE the symptoms and **PREDICT** the impact a loss or malfunction of Chemical and Volume Control System components will have on the operation of the Chemical and Volume Control System (OPS-52101F02)

Question History: NEW

K/A match: 1) **Tier 3 question -- requires focus on GENERIC issue**--- at least half on this Generic concept: Transient Alarm response per NMP guidance.
2) **KA is 2 part and tier 3--** Because this requires 2 System specific pieces of information (setpoint and controls) and must be generic in nature. The scope has been limited to **only the highest COG level** (actions) per ES-401 D.2.a par 2.

SRO justification: N/A

72. WE04EK2.2 072/FNP BANK/VOGTLE 2010/C/A 3.8/4.0/W/E04EK2.2/N/2/HBF/GTO/

A LOCA outside containment has occurred on Unit 1. The following conditions exist:

- ECP-1.2, LOCA Outside Containment, is in progress.

Which one of the following states the **FIRST** system to be isolated from the RCS in the attempt to isolate the leak, and which RCS parameter is monitored to confirm that a leak has, or has NOT, been isolated in accordance with ECP-1.2?

	First system isolated	RCS parameter
A.	RHR	PRESSURE
B.	RHR	RVLIS Level
C.	HHSI	PRESSURE
D.	HHSI	RVLIS Level

ECP-1.2,v7.0 step 1.1 & 1.2 will isolate BOTH RHR loops from the RCS.
Step 2&3, RCS pressure is checked after each isolation, IF pressure is rising at these checks then the procedure is exited.

From ECB-1.2, v1.0, justification for step 1 states that "a rupture or break outside containment **is most probable to occur in the low pressure RHR System piping"**

justification for step 2 states, check RCS pressure to determine if the break has been isolated by previous actions.

Distractor Analysis:

A. Correct See above.

B. Incorrect Plausible: From ECB-1.2 step 2 "KNOWLEDGE": " [...] RCS repressurization may be delayed following break isolation." Since RHR is the first and only system isolated RCS inventory would be an accurate measure of isolation. However, RVLIS only measures MILESTONE levels, and is not indicative of instantaneous changes.

C. Incorrect 1) HHSI is never specifically isolated from the RCS in ECP-1.2; it is unlikely that a leak would develop on the limited amount of piping that would affect the RCS (Check valves) and because HHSI is INJECTING at all times, then isolating HHSI would be counter productive (allowing more RCS to leak out) if it were on the limited piping from HHSI.

Plausible: HHSI system is also connected to the RCS and could be a potential source of the LOCA outside Containment albeit unlikely. ECP-1.2 if efforts to locate within RHR and other likely locations are unproductive, then the operator is directed to continue efforts to locate and isolate the leak.

2) See A.2

D. Incorrect 1) See C.1
2) See B.2

K/A: **WE04EK2.2 LOCA Outside Containment**— Knowledge of the **interrelations** between the (LOCA Outside Containment) and the following: Facilities heat removal systems, including primary coolant, emergency coolant, **the decay heat removal systems**, and relationships between the proper operation of these systems to the **operation of the facility.**

Importance Rating:	3.8 4.0
Technical Reference:	FNP-1-ECP-1.2,v 7 FNP-0-ECB-1.2,v 1
References provided:	None
Learning Objective:	ANALYZE plant conditions and DETERMINE the successful completion of any step in ECP-1.2, LOCA Outside Containment. (OPS-52532E07).
Question History:	FNP Bank (ECP-1.2-52532E07 004); FNP bank question edited to mirror that used on Vogtle 2010, ONLY formatting changed.
K/A match:	**INTERRELATIONSHIP between the ISLOCA and the HHSI/LHSI is given,** both systems would be in service during the ISLOCA, **however, the relationship between these systems and the process/sequence of isolation** (major systems are isolated in order of greatest threat potential to least) as well as the **relationship with RCS parameters which will demonstrate successful isolation** from the ISLOCA.
SRO justification:	N/A

1. ECP-1.2-52532E07 004/HLT//C/A 3.6/4.2/W/E04EA2.2////

Given the following:

- A LOCA outside containment has occurred.
- The crew is performing the actions in ECP-1.2, LOCA Outside Containment.

Which one of the following actions will be attempted to isolate the break and which indication is used to determine if the leak has been isolated in accordance with ECP-1.2?

A. Isolate low pressure Safety Injection piping.

RCS pressure is monitored.

B. Isolate low pressure Safety Injection piping.

RVLIS level is monitored.

C. Isolate high pressure Safety Injection piping.

RCS pressure is monitored.

D. Isolate high pressure Safety Injection piping.

RVLIS level is monitored.

A. Correct. Per ECA-1.2, monitor RCS pressure. The design basis LOCA Outside Containment is on the LHSI piping, not the HHSI piping.
B and D. Incorrect because RCS inventory will increase, but may not immediately show up on PZR level.
C and D. Incorrect. The design basis LOCA Outside Containment is on the LHSI piping.

EA2.2 - Ability to determine and interpret the following as they apply to the (LOCA Outside Containment) Adherence to appropriate procedures and operation within the limitations in the facility's license and amendments.

Importance Rating: 3.6

Technical Reference: 1-ECA-1.2

Question History: WTSI bank

1. WE04EK2.2 001/1/1/LOCA OUTSIDE-SYSTEMS/C/A - 3.8 / 4.0/NEW/HL-15R NRC/RO/TNT/DS

Given the following:

- A LOCA outside Containment has occurred.

- The crew is performing 19112-C, "LOCA Outside Containment".

Which **ONE** of the following is:

1) the **FIRST** system to be isolated from the RCS to attempt leak isolation, and

2) the parameter monitored to determine if the leak has been isolated?

	1) **First System Isolated**	2) **Parameter Monitored**
A.	RHR	RCS temperature
B.✓	RHR	RCS pressure
C.	SI	RCS temperature
D.	SI	RCS pressure

formatting of this question used. RCS temp parameter not used, since FNP bank used RVLIS.

K/A

WE04 LOCA Outside Containment

EK2.2 Knowledge of the interrelations between the (LOCA Outside Containment) and the following:

Facilities heat removal systems, including primary coolant, emergency coolant, the decay heat removal systems, and relationships between the proper operation of these systems to the operation of the facility.

K/A MATCH ANALYSIS

The question presents a plausible scenario where a LCOA outside Containment has occurred and the crew is performing 19112-C, LOCA Outside Containment. The student must have knowledge of which system is isolated first to attempt to stop the leakage and what indications are used to determine the leak is isolated.

ANSWER / DISTRACTOR ANALYSIS

A. Incorrect. The RHR system is isolated first per 19112-C is correct. RCS pressure is used as the parameter to monitor. The student may think the SI system is isolated first because it has a higher discharge pressure.

B. Correct. 19112-C directs that RHR is isolated first and RCS pressure is to be used.

C. Incorrect. The RHR system is isolated first per 19112-C to attempt leak isolation. RCS pressure is used as the parameter to monitor. RCS temperature would indicate isolation of a secondary leak.

D. Incorrect. The RHR system is isolated first per 19112-C to attempt leak isolation. RCS pressure is used as the parameter to monitor. The student may think the SI system is isolated first because it has a higher discharge pressure.

REFERENCES

19112-C, LOCA Outside Containment

V-LO-PP-37116, LOCA Outside Containment, slide # 11

VEGP learning objectives:

LO-LP-37116-02, Describe the steps taken to isolate a LOCA outside Containment.

LO-LP-37116-03, Describe the indictations used to determine that a LOCA outside Containment was successfully isolated.

Question Rating

SATISFACTORY

LOK - H

LOD -3

NRC Comments:

None

Answer and Proposed Fix:

None

73. WE05EK2.1 073/NEW/N/A/C/A 3.7/3.9/W/E05EK2.1/N/3/HBF/GTO/

A Reactor Trip has occurred on Unit 1. The following conditions exist:

- B Train SSPS is in TEST.
- FRP-H.1, Response to Loss of Secondary Heat Sink, is in progress.
- FRP-H.1 Attachment 1, Main Feedwater Bypass Valves Automatic Closure Defeat, has been completed.
- 1A SGFP has been aligned and is feeding the SGs.

Subsequently, an automatic SI occurs.

Which one of the following completes the statement below which describes the effects on the 1A SGFP and support conditions per FRP-H.1?

1A SGFP _(1)_ automatically trip.

Service Water cooling to the Turbine Building _(2)_ isolate.

	(1)	(2)
A.	WILL	will NOT
B✓	WILL	WILL
C.	will NOT	will NOT
D.	will NOT	WILL

FRP-H.1, v27.0 STEP 3 (&7.9) NOTE states, "[i]f SI has not actuated since Reactor Trip, [...] A subsequent SI will still cause the trip of an operating SGFP."

Attachment 1 will defeat the automatic closure of the main feedwater bypass valves following any FWIS, but the SGFP trip will still occur.

SW isolations to the TB (MOV-514/515/516/517) all receive a full closure signal upon an SI signal. However, these valves are orientated such that ONE valve in each SW Supply line is operated by the OPPOSITE train of SSPS. (ie MOV-514 (B-Train SSPS) and MOV-517 (A-Train SSPS) are located within the B TRN SW supply line.

Therefore:

With B train SSPS in TEST, MOV-514 and MOV-516 WILL not close.
And ONLY MOV-515 & MOV-517 WILL Close. This WILL terminate ALL SW supply to the TB.

Distractor analysis:

A. Incorrect 1) See B.1.

2) B train SSPS being in test does NOT prevent B train SW header from being ISOLATED from the TB, MOV515 & MOV517 would close, there is one valve in each of the two Supplies to the TB.

Plausible: B Train SSPS in test would imply that B train components do not actuate. therefore B train SW supply valves would not close. IF one incorrectly thought B train SW header remained aligned to the TB, then this answer would be selected. Furhter plausibility is presented if one thought that the TB SW isolations only actuated to a throttled position as they do for a LOSP event.

B. Correct 1) See above NOTE.

2) MOV515 & MOV517 both closed. One is in each SW supply line to the TB. Therefore, Both SW headers would be isolated from the TB.

C. Incorrect 1) See above
2) See A.2;

Plausible: This answer choice would b**e selected if the jumpers installed per ATTACHMENT 1 were thought to also disable the SGFP trips** as it does the FRBVs closure signals. Also, this may be selected if one thought that the FW ISO RESET would prevent a subsequent trip of the SGFP.

This is correct IF A SI signal had previously actuated, and the SI signal was BLOCKED/RESET prior to establishing SGFP operation per step 7.8; since this would also prevent a RE-ISOLATION of the TB SW isolations. Further plausibility is presented if one thought that the TB SW isolations only actuated to a throttled position as they do for a LOSP event.

D. Incorrect 1) see C.1
2) See B.2;

Plausible: IF one thought that operation of the FW ISO RESET pushbutton or if ATTACHMENT 1 prevented trip of the SGFP but properly recognized the impact on SW then this would be selected.

K/A: **WE05EK2.2 Loss of Secondary Heat Sink**— Knowledge of the **interrelations** between the (Loss of Secondary Heat Sink) and **Components, and functions of control and safety systems**, including instrumentation, signals, interlocks, failure modes, and automatic and manual features.

Importance Rating:	3.7 3.9
Technical Reference:	FSD A181007, v18.0 figure F-2 sheet 8 & 13, FNP-1-FRP-H.1,v27
References provided:	None
Learning Objective:	EVALUATE plant conditions and DETERMINE if any system components need to be operated while performing (1) FRP-H.1, Response to Loss of Secondary Heat Sink; (2) FRP-H.2, Response to SG Overpressure; (3) FRP-H.3, Response to SG High Level; (4) FRP-H.4, Response to Loss of Normal Steam Release Capabilities; (5) FRP-H.5, Response to SG Low Level. (OPS-52533F06)
Question History:	NEW
K/A match:	INTERRELATIONSHIP between SI signal (function of control and safety systems) impacts the SGFP operation, which is an AUTOMATIC feature impacting both the SGFP itself and the SW supply which provides Cooling to the SGFP. Also the INTERRELATIONSHIP between the only feed source and SW system (SAFETY SYSTEM) is tested. The SSPS in TEST is added to improve plausibility of SW NOT isolated, and may be omitted if plausibility is not a challenge.
SRO justification:	*N/A*

74. WE09EG2.4.20 074/NEW/N/A/C/A 3.8/4.3/W/E09EG2.4.20/N/2/HBF/GTO/

Unit 1 has tripped following a loss of All AC Power. The following conditions exist:

- ECP-0.0, Loss of All AC Power, was entered.
- 1-2A DG was started and aligned to the emergency buses.
- CCW and charging flow to the RCP seals was lost for 25 minutes.
- A Safety Injection has **NOT** previously been actuated/initiated.
- ESP-0.2, Natural Circulation Cooldown To Prevent Reactor Vessel Head Steam Voiding, is currently in progress.

Which one of the following completes the statements below per ESP-0.2?

At least one RCP is required to be started _(1)_ upon satisfying support conditions.

Upon a subsequent SI Actuation, EEP-0.0, Reactor Trip Or Safety Injection, _(2)_ be entered.

	(1)	(2)
A.	IMMEDIATELY	WILL
B.	IMMEDIATELY	will NOT
C.	ONLY after a status evaluation is performed AND	WILL
D.	ONLY after a status evaluation is performed AND	will NOT

STEP 1, CAUTION-1 states, "[CA] To ensure proper plant response, FNP-1-EEP-0 [...] must be entered upon any SI actuation."

STEP 1, CAUTION-2 states, "If RCP seal cooling had previously been lost, the affected RCP should not be started prior to a status evaluation."

Distractor Analysis:

A. Incorrect 1) 25 minutes is much greater than "a few minutes", and an evaluation of the seal/bearing temperatures at a minimum would be required. FNP-0-ESB-0.2, v2 states the following:

If RCP seal cooling is **lost for only a few minutes**, the inventory of cold water in the seal area should prevent excessive seal heat up. **For longer periods of time, seal and bearing temperatures may increase greater than 300°F. If excessive temperatures develop, the affected RCP should not be restarted prior to a complete RCP evaluation.**

Plausible: When implementing ECP-0.0, if power can be restored from the MCB (prior to step 6) then the loss of All AC power strategies are not fully implemented; Those ECP-0.0 long term strategies incorporate procedural actions to mitigate RCP Seal damage. If ECP-0.0 is exited at step 6, the RCP seal protection steps are not implemented in ECP-0.0, one may consider that this is an acceptable duration to preclude seal damage.

2) see above.

B. Incorrect 1) See A.1
2) see caution above; If plant conditions degrade, such that a Safety Injection is required to be initiated, **during recovery from reactor trip without safety injection**, EEP-0.0 should be reentered and immediate actions performed [...]. (SOP-0.8 step 4.3.4.2, ESB-0.2 basis).

Plausible: Generally throughout the ERG network, once E-0 has been entered, and exited it is NOT re-entered. The exception to the rule is a transition through ESP-0.1. Additionally, ESP-0.2 entry could occur through ESP-1.1, in which SI would have been terminated; under this condition ***one may incorrectly believe*** that the SI signal may not be capable of being re-actuated and must be aligned (foldout page from ESP-1.1), which would provide direction to transition to EEP-1.0, bypassing EEP-0.

C. Correct See Cautions above.

D. Incorrect 1) See above
2) See A.2

K/A: WE09EG2.4.20	Natural Circ—Knowledge of the operational implications of EOP warnings, cautions, and notes.
Importance Rating:	3.8 4.3
Technical Reference:	FNP-0-ESB-0.2,v2.0 FNP-1-ESP-0.2, v19.0 FNP-0-SOP-0.8, v20.0
References provided:	None
Learning Objective:	STATE AND EXPLAIN the basis for all Cautions, Notes, and Actions associated with (1) ESP-0.2, Nat Circ C/D to Prevent Reactor Vessel Head Steam Voiding; (2) ESP-0.3, Nat Circ C/D with Allowance for Reactor Vessel Head Steam Voiding (with RVLIS); (3) ESP-0.4, Nat Circ C/D with Allowance for Reactor Vessel Head Steam Voiding (without RVLIS). (OPS-52531C03). ANALYZE plant conditions and DETERMINE if actuation or reset of any Engineered Safety Features Actuation Signal (ESFAS) is necessary. (OPS-52531C05)
Question History:	NEW/ MOD from FNP Bank (ESP-0.1-52531B06 008)
K/A match:	The CAUTIONS of ESP-0.2 for RCP RESTART and EEP-0 transitions are specifically addressed.
SRO justification:	N/A

75. WE13EK3.4 075/FNP BANK/FNP 2004/C/A 3.1/3.3/W/E13EK3.4/N/3/HBF/GTO/

The following conditions exist for Unit 1:

- FRP-H.2, Response to Steam Generator Overpressure, is in progress.
- Containment pressure is 4.5 psig and slowly decreasing.
- RCS temperature is 585°F.

	1A	1B	1C
• SG Pressure	1200 psig	1190 psig	1250 psig
• SG NR Levels	25%	30%	98%

Which one of the following completes the statement below per FRP-H.2?

A steam release _____

A. is NOT permitted from 1C SG to prevent equipment or piping damage if overfill occurs.

B. is NOT permitted from ANY SG to minimize extent of equipment or piping damage since overfill has already occurred.

C. will be initiated using 1C Atmospheric Relief Valve to drop pressure below 1070 psig to reseat the code safeties.

D. will be initiated from 1C SG using the TDAFW pump to drop pressure below 1130 psig and increase AFW pressure to permit feeding.

ALL S/Gs are "affected" since pressure in ALL SGs is > 130 psig. However, FRP-H.2 Step 3 states: "**Check affected SG(s) narrow range level - LESS THAN 91%{76%}.**" For this condition RNO Step 3 directs the operator to Go to FNP-1-FRP-H.3, RESPONSE TO STEAM GENERATOR HIGH LEVEL.

FRP-H.3 Caution prior to step 1

CAUTION : **Steam should not be released from any SG whose narrow range level has exceeded 91%{76%} until an overfill evaluation has been performed.** Blocking main steam line hangers and draining affected steam lines should be considered.

Distractor Analysis:

A. Correct **NOT release steam from 1C SG to prevent equipment or piping damage.** In this case with SGWL > 91% on 1C SG, steam should not be released from that SG until an overfill evaluation has been performed.

B. Incorrect While the team would exit H.2 to go to H.3 for 1C SG, **the other two SGs would have the pressure in them reduced IAW H.2 (either after H.3 is exited OR conducted in parallel)** H.3 would isolate flow to 1C SG and align blowdown to reduce level, then transition back to H.2 to reduce pressure in the other two SGs.

C. Incorrect This could cause damage to that SG.

D. Incorrect This is another path to reduce SG pressure in 1C SG **if level was < 91%,** incorrect reason for aligning the TDAFWP.

K/A: WE13EK3.4 –Steam Generator Over-pressure: Knowledge for the reasons for the ***RO or SRO function within the control room team as appropriate to the assigned position, in such a way that procedures are adhered to and the limitations in the facilities license and amendments are not violated*** as they apply to the SG overpressure.

Importance Rating:	3.1	3.3
Technical Reference:	FNP-1-FRP-H.2, v10 FNP-1-FRP-H.3, V11	
References provided:	None	
Learning Objective:	EVALUATE plant conditions and DETERMINE if any system components need to be operated while performing (1) FRP-H.1, Response to Loss of Secondary Heat Sink; (2) FRP-H.2, Response to SG Overpressure; (3) FRP-H.3, Response to SG High Level; (4) FRP-H.4, Response to Loss of Normal Steam Release Capabilities; (5) FRP-H.5, Response to SG Low Level. (OPS-52533F06).	
Question History:	FNP BANK (FRP-H-52533F06 009); FNP 2004 NRC exam	
K/A match:	Knowledge of REASONS for RO regarding procedure adherance: RECALL procedural/equipment limitations for an OVERFILLED and OVERPRESSURIZED SG. LIMITATIONS of facility: MINIMIZE Volume of potentially radioactive release - DONOT OPEN STEAM release valve ON overfull SG - this would create a swell and likely fill the Steam lines (IF not already full) and potentially damage the steam lines.	
SRO justification:	N/A Major mitigative strategy/systems knowledge	

RO REFERENCE PAGES

DOCUMENT ID		PAGES
FNP-0-AOP-29.0, v41.0 Table 1	PARTIAL- Pg 1 of 4 & pg 3 of 4	2 Pages
FNP-1-EEP-3.0, V27	PARTIAL- Pg 39 of 54	1 Page
D-175009 Sheet 1 of – NOTE: LARGER drawing available upon request		1 Page (tablet 11X17)

TABLE 1

ACTIONS REQUIRED TO MAINTAIN AT LEAST ONE TRAIN OF SAFE SHUTDOWN

****

CAUTION: Cables/components can fail in the event of a fire causing a loss of reactor coolant inventory. The rooms containing these cables/components are designated with an asterisk (*).

****

NOTE:

- This table lists various rooms/locations that contain redundant safe shutdown equipment or could potentially result in loss of reactor coolant inventory. Appendix R safe shutdown analysis documents the basis of safe shutdown for each fire area.
- For each location listed, an appropriate attachment is cross-referenced.

---

1 **For a fire in an area listed in Table 1, implement the actions required by the associated attachment.**

NOTE: A fire that is outside an area listed in Table 1 will not affect both trains of a safe shutdown function.

---

2 **IF a fire IS NOT in an area listed in Table 1, THEN use other plant procedures for any actions that may be required.**

-END-

Table 1

Unit 1 Fire Areas

Fire Area	Location	Attachment
1-001	UNIT 1 AUXILIARY BUILDING RAD SIDE 121' AND 100' PENETRATION ROOMS, 83' ELEVATION AND 77' ELEVATION	4
1-004 Zone 1	UNIT 1 AUXILIARY BUILDING 100' RAD SIDE EXCEPT PENETRATION ROOM AND CHARGING PUMP AREA	5
1-004 Zone 2	UNIT 1 AUXILIARY BUILDING 121' AND 127' RAD SIDE EXCEPT THE 121' PENETRATION ROOM	6
1-004 Zone 3	UNIT 1 AUXILIARY BUILDING 139' RAD SIDE EXCEPT PRF ROOM AND THE ELECTRICAL PENETRATION ROOMS	6
1-004 Zone 4	UNIT 1 AUXILIARY BUILDING 155' ELEVATION AND SFP HVAC ROOM	7
1-005	CHARGING PUMP ROOMS AND HALLWAY AND STORAGE ROOMS	8
1-006	UNIT 1 NON RAD AUXILIARY BUILDING 100' ELEVATION	9
1-006	UNIT 1 MAIN STEAM AND FEEDWATER VALVE ROOM	10
1-008	UNIT 1 TRAIN A VERTICAL CABLE CHASE	11
*1-009	UNIT 1 TRAIN B VERTICAL CABLE CHASE	12
1-012	UNIT 1 HOT SHUTDOWN PANEL ROOM	13
1-013	UNIT I AUX BLDG VERTICAL CABLE CHASE RM 227, 300, 465, 466AND 500	14
1-014	UNIT 1 COMPUTER ROOM	20
1-015	UNIT 1 COMMUNICATIONS ROOM	20
1-016	UNIT 1 B TRAIN AUX BLDG BATTERY ROOM	16
1-017	UNIT 1 A TRAIN AUX BLDG BATTERY ROOM	15
1-018	UNIT 1 TRAIN A DC SWITCHGEAR ROOM AUX BUILDING	15
1-019	UNIT 1 TRAIN B DC SWGR ROOM	14
1-020	UNIT 1 NON-RAD HALLWAY 121 FT. EL.	14
1-021	UNIT 1 AUX BLDG SWGR ROOM B TRN	12
1-023	UNIT 1 AUX BLDG CRDM SWGR RM	12
1-030	UNIT I AUX BLDG B TRAIN CABLE CHASE	12
1-031	UNIT I AUX BLDG A CABLE TUNNEL	11
*1-034	B TRAIN ELECTRICAL PENE ROOM AND PENETRATION ROOM FILTRATION ROOM	16
*1-035	A TRAIN ELECTRICAL PENE ROOM	17
1-041	UNIT 1 139' 4160V SWGR AND CRDM MG SET ROOM (RM 335,343 AND 346)	11
1-042	UNIT I 139' HALLWAY (RM 319, 339, AND 345)	15
1-075	UNIT I AUX BLDG TO DIESEL BLDG A TRN CABLE TUNNEL	11
1-076	UNIT I AUX BLDG TO DIESEL BLDG B TRN CABLE TUNNEL	18
1-081	UNIT 1 TURBINE BUILDING BATTERY ROOM	38
1-094	COMBUSTIBLE STORAGE ROOM 167	39
1-S01	UNIT I NON RAD STAIRWELL	21
1-S10	UNIT I RAD STAIRWELL EASTSIDE TO 130' EL	37
1-SVB2	SERVICE WATER VALVE BOX 2	19
1-SVB4	SERVICE WATER VALVE BOX 4	19
1-TB	UNIT 1 TURBINE BUILDING	20

Step	Action/Expected Response	Response NOT Obtained

****

CAUTION: To prevent release of radioactivity to the environment, RCS and ruptured SG(s) pressures must be maintained less than the ruptured SG(s) atmospheric relief valve setpoint (1035 psig).

****

___31 **[CA] Control RCS parameters to minimize RCS to secondary leakage.**

31.1 Perform appropriate action(s) from table.

		RUPTURED SG(s) LEVEL		
		Rising	Falling	Offscale high
PRZR LEVEL	Less than 25%{50%}	• Raise charging flow. • Reduce RCS pressure.	• Raise charging flow.	• Raise charging flow. • Maintain RCS and ruptured SG(s) pressures equal.
	Between 25%{50%} and 60%{60%}	• Reduce RCS pressure.	• Turn on PRZR heaters.	• Maintain RCS and ruptured SG(s) pressures equal.
	Between 60%{60%} and 73%{66%}	• Reduce RCS pressure. • Reduce charging flow.	• Turn on PRZR heaters.	• Maintain RCS and ruptured SG(s) pressures equal.
	Greater than 73%{66%}	• Reduce charging flow.	• Turn on PRZR heaters.	• Maintain RCS and ruptured SG(s) pressures equal.

Step 31 continued on next page.

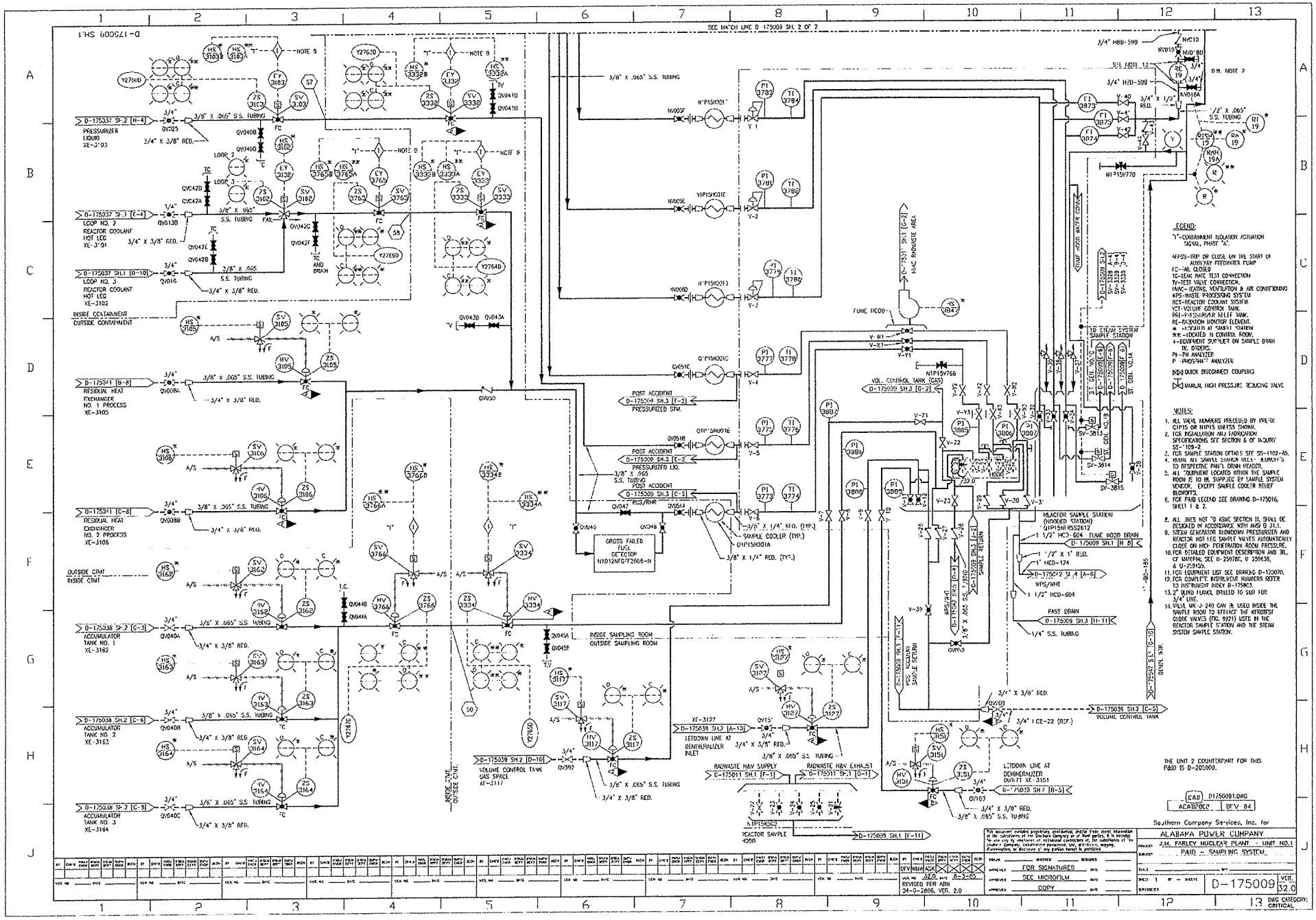
D-175009 SH.1
SEE MATCH LINE D-175009 SH. 2 OF 2
PRESSURIZER LIQUID XE-3103
LOOP NO. 2 REACTOR COOLANT HOT LEG XE-3101
LOOP NO. 3 REACTOR COOLANT HOT LEG XE-3102
INSIDE CONTAINMENT OUTSIDE CONTAINMENT
RESIDUAL HEAT EXCHANGER NO. 1 PROCESS XE-3105
RESIDUAL HEAT EXCHANGER NO. 2 PROCESS XE-3106
OUTSIDE CTMT INSIDE CTMT
ACCUMULATOR TANK NO. 1 XE-3162
ACCUMULATOR TANK NO. 2 XE-3163
ACCUMULATOR TANK NO. 3 XE-3164
VOLUME CONTROL TANK GAS SPACE XE-3117
INSIDE SAMPLING ROOM OUTSIDE SAMPLING ROOM
GROSS FAILED FUEL DETECTOR
POST ACCIDENT PRESSURIZED STM.
POST ACCIDENT PRESSURIZED LIQ.
POST ACCIDENT RCS/RHR
SAMPLE COOLER (TYP.)
VOL. CONTROL TANK (GAS)
HVAC RADWASTE AREA
FUME HOOD
TO STEAM SYSTEM SAMPLE STATION
REACTOR SAMPLE STATION (HOODED STATION)
SAMPLE RETURN
PASS DRAIN
VOLUME CONTROL TANK
LETDOWN LINE AT DEMINERALIZER INLET
RADWASTE HAV SUPPLY
RADWASTE HAV EXHAUST
REACTOR SAMPLE HOOD
LETDOWN LINE AT DEMINERALIZER OUTLET XE-3151
LEGEND:
"T"-CONTAINMENT ISOLATION ACTUATION SIGNAL, PHASE "A".
AFPSS-TRIP OR CLOSE ON THE START OF AUXILIARY FEEDWATER PUMP
FC-AIL CLOSED
TC-LEAK RATE TEST CONNECTION
TV-TEST VALVE CONNECTION.
HVAC-HEATING, VENTILATION & AIR CONDITIONING
WPS-WASTE PROCESSING SYSTEM
RCS-REACTOR COOLANT SYSTEM
VCT-VOLUME CONTROL TANK.
PRT-PRESSURIZER RELIEF TANK.
RE-RADIATION MONITOR ELEMENT.
* -LOCATED IN PANEL STATION
** -LOCATED IN CONTROL ROOM
+-EQUIPMENT SUPPLIER ON SAMPLE DRAIN TK. ORDERS.
PH-PH ANALYZER
P -PROSPHAT" ANALYZER
QUICK DISCONNECT COUPLING
MANUAL HIGH PRESSURE REDUCING VALVE
NOTES:
1. ALL VALVE NUMBERS PRECEDED BY XVE-IX CIP15 OR NIP15 UNLESS SHOWN.
2. FOR INSTALLATION AND FABRICATION SPECIFICATIONS SEE SECTION 6 OF INQUIRY SS-1109-2.
3. FOR SAMPLE STATION DETAILS SEE SS-1102-65.
4. WHEN ALL SAMPLE STATION HOLD-UP SUMPS TO RESPECTIVE PANEL DRAIN HEADER.
5. ALL EQUIPMENT LOCATED WITHIN THE SAMPLE ROOM IS TO BE SUPPLIED BY SAMPLE SYSTEM VENDOR. EXCEPT SAMPLE COOLER RELIEF BLOWOFFS.
6. FOR PAID LEGEND SEE DRAWING D-175016, SHEET 1 & 2.
8. ALL LINES NOT "D" ASME SECTION III, SHALL BE DESIGNED IN ACCORDANCE WITH ANSI B 31.1.
9. STEAM GENERATOR BLOWDOWN PRESSURIZER AND REACTOR HOT LEG SAMPLE VALVES AUTOMATICALLY CLOSE ON HIGH PENETRATION ROOM PRESSURE.
10. FOR DETAILED EQUIPMENT DESCRIPTION AND BILL OF MATERIAL SEE D-250786, D 250636, & D-250100.
11. FOR EQUIPMENT LIST SEE DRAWING D-175070.
12. FOR COMPLETE INSTRUMENT NUMBERS REFER TO INSTRUMENT INDEX D-175803.
13. 2" BLIND FLANGE DRILLED TO SUIT FOR 3/4" LINE.
14. VALVE MK-J-240 CAN BE USED INSIDE THE SAMPLE ROOM TO REPLACE THE NEEDLESS GLOBE VALVES (NO. 9921) USED IN THE REACTOR SAMPLE STATION AND THE STEAM SYSTEM SAMPLE STATION.
THE UNIT 2 COUNTERPART FOR THIS P&ID IS D-205009.
CAD D175009.DWG
ACADBOOD DEV. 04
Southern Company Services, Inc. for
ALABAMA POWER COMPANY
J.M. FARLEY NUCLEAR PLANT - UNIT NO.1
P&ID - SAMPLING SYSTEM
FOR SIGNATURES
SEE MICROFILM
COPY
REVISED PER ABN 94-0-2806, VER. 2.0
D-175009
VER. 32.0
DWG CATEGORY: CRITICAL