Enclosure 4 to HEM-12-88

Sampling Plan for Piping Destined for USEI
(to be incorporated into HDP-PR-WM-905, Waste Sampling Methods, Labeling and Custody)

Westinghouse Electric Company LLC
US Ecology Idaho, Inc.

Westinghouse Electric Company LLC, Hematite Decommissioning Project

Docket No. 070-00036

Sampling Plan for Piping Destined for USEI
(to be incorporated into HDP-PR-WM-905, *Waste Sampling Methods, Labeling and Custody*)

8.9 Characterization of Piping Destined For USEI

NOTE: The following steps may be performed in any logical and operationally effective order.

NOTE: For batches of piping to be disposed at the USEI facility, the contribution to total activity from uranium and other gamma emitting radionuclides (e.g., Ra-226, Th-232) will be determined using High Resolution Gamma Spectroscopy (HRGS). The Tc-99 content will be determined through the application of a scaling factor based on batch sampling and laboratory analysis for uranium and Tc-99. These paired measurements (gamma spectroscopy and sampling) will be performed at a minimum frequency of once per 7 m^3 (approximate) batch of piping material (either intact or crushed).

NOTE: Field duplicate samples are required to be collected at a frequency of 1 per 20.

Responsibility	Step	Action
WM	8.9.1	Identify the piping / debris pile to be sampled. NOTE: Each batch of piping / debris to be sampled shall constitute a maximum volume of 7 m^3.
HP	8.9.2	Review the AHA or RWP as applicable. As required by the AHA/RWP select and wear the appropriate PPE.
	8.9.3	Verify the batch of piping / debris to be characterized is that requested by WM.
	8.9.4	Perform an assay of the material batch in accordance with HDP-PR-HP-413, ISOCS Operation and Data Verification.
	8.9.5	Collect a minimum of 4 swipe samples from internal piping surfaces from each batch of material. Sample locations should not be biased based on gamma measurements.
	8.9.6	Combine the swipe samples into a single sample container. If required to meet the field duplicate sampling frequency, collect a field duplicate sample also consisting of 4 swipe samples.
	8.9.7	Close and label the sample container. For field duplicate samples, designate QC type "FD" in association with the sample number. When completing the Chain of Custody (COC) include –FD at the end of the sample id.

Responsibility	Step	Action
	8.9.8	Record the appropriate information on Form HDP-PR-WM-905-2, Survey of USEI Waste Soil Piles, or equivalent.
WM	8.9.9	Ship the sample to the approved off-site laboratory in accordance with HDP-PR-WM-910, Shipment of Radioactive Material (Reference 5.6).

Enclosure 5 to HEM-12-88

NSA-TR-HDP-11-11
NCSA of the US Ecology Idaho (USEI) Site for the Land Fill Disposal of Additional Decommissioning Waste from the Hematite Site
Revision 1

Westinghouse Electric Company LLC
US Ecology Idaho, Inc.

Westinghouse Electric Company LLC, Hematite Decommissioning Project

Docket No. 070-00036

Nuclear Criticality Safety Assessment of the US Ecology Idaho (USEI) Site for the Land Fill Disposal of Additional Decommissioning Waste from the Hematite Site

Revision 1

July 2012

Derek Mann 7-19-2012
Derek Mann Date
Author

7/19/2012
Brian Matthews Date
Co-Author

7/19/12
James Bazley Date
Technical Reviewer

7/19/2012
Brian Matthews Date
Project Manager

7/19/12
Dennis Richardson Date
HDP Approval

Revision History

Rev. #	By	Significant Changes
0	B. Matthews & D. Mann	Original issue
1	B. Matthews & D. Mann	• Document revised to justify the acceptability of consignment of waste materials to the USEI site that are designated as HDP *NCS Exempt Material* based on the criteria of no more than 15g ^{235}U within an enclosed volume occupying at least 5L. • Deleted Section 1.4.6 and Section 2.4.6, and re-numbered the subsequent sections. • Adjusted NCS control set to reflect similar NCS controls found in NSA-TR-09-14. • Updated references; and • Other minor changes.

TABLE OF CONTENTS

LIST OF TABLES

LIST OF FIGURES

Glossary of Acronyms, Abbreviations, and Terms

Acronym/Term	Definition
'	Foot (12")
"	Inch (2.54 cm)
AEC	Atomic Energy Commission
AESOP	American Ecology Standard Operating Platform
ALARA	As Low As Reasonably Achievable
Assay container	Containers presented for radiological characterization at a MAA that comprise *Non-NCS Exempt Material*.
Bq	One radioactive disintegration per second
cc	Cubic centimeter
CD	Collared Drums (CDs) are used to transfer, stage, and store Non-NCS Exempt Materials. Each CD has a cylindrical geometry, possessing a minimum internal diameter of 57cm. Each CD, irrespective of dimension, is fitted with a collar that extends 18" beyond the external radial surface of the CD. The CD collar is designed to ensure that any un-stacked arrangement of CDs would guarantee a minimum 36" separation distance between the outer surfaces of the CDs. The affixed collar is secured to the CD and is not removed at any time the CD is being used, except when empty or when approved by an NCSA.
CDBS	Collared Drum Buffer Store – area used to interim store loaded CDs that do not have assigned ^{235}U mass contents, but have a bounding estimate.
CDRA	Collared Drum Repack Area - area used to repackage or batch the contents of CDs to allow consolidation of CDs.
CDSA	Collared Drum Staging Area – area used to stage loaded CDs
CERCLA	Comprehensive Environmental Response Compensation and Liability Act
CFR	Code of Federal Regulations
Ci	Curie (equivalent to 3.7 x 10^{10} Bq)
cm	Centimeter
CSC	Criticality Safety Control
Cut Depth	Maximum permitted thickness of a layer of buried wastes/contaminated soils that is permitted to be exhumed following implementation of in-situ radiological survey and visual inspection procedures and removal of identified *Non-NCS Exempt Material*.
DCD	Decollared Drum
DCGL	Derived Concentration Guideline Levels
D&D	Decontamination and Decommissioning
DinD	Defense-in-Depth
ESII	Environmental Services of Idaho Inc.
Field Container	Limited volume container used to package Hot Spots
Fissile Material Container	Container comprising material designated as Non-NCS Exempt Material and with established ^{235}U gram content.

Acronym/Term	Definition
Fissile Material	Material containing fissile nuclides (e.g., ^{235}U) in a quantity/concentration sufficient to require NCS controls/oversight.
FMSA	Fissile Material Storage Area – area used to interim store loaded CDs and/or DCDs *that* have an ascribed ^{235}U mass content.
g	Gram
GUNFC	Gulf United Nuclear Fuels Corporation
HDP	Hematite Decommissioning Project
HEU	Highly Enriched Uranium
Hot Spot	Item or region of buried materials or soil that exhibits a fissile nuclide concentration exceeding the limit established for NCS Exempt Material. In the body of this NCSA, Hot Spots are defined as a distinct in-situ location where field instruments indicate an elevated quantity of ^{235}U (whether one object, a group of objects, or a cluster of material) when compared to the quantity of ^{235}U in the surrounding area
HPGe	High-Purity Germanium
HRGS	High Resolution Gamma Spectrometers
IX	Ion Exchange
kg	Kilogram
L	Liter
LLW	Low Level Waste
μ	Micro (1.0×10^{-6})
m	Meter
MAA	Material Assay Area - area used to assay *Non-NCS Exempt Materials* in order to provide a ^{235}U gram inventory estimate.
mg	Milligram
MLD	Minimum Level of Detection
mil	One thousandth
NaI	Sodium Iodide
NCS	Nuclear Criticality Safety
NCSA	Nuclear Criticality Safety Assessment
NCS Exempt Material	Material that is safely subcritical by virtue of its low fissile nuclide mass or concentration, and which does not warrant application of CSCs.
Non-NCS Exempt Material	Material that has a fissile nuclide concentration greater than the limit established for NCS Exempt Material, or materials that comprise un-assayed Intact Containers or Non-Conforming Items recovered during HDP Remediation Area waste exhumation operations. These materials require CSCs to ensure their safe handling, packaging, processing, and storage.
p	Pico (1.0×10^{-12})
RCRA	Resource Conservation Recovery Act
SNM	Special Nuclear Material - material containing fissile nuclides (e.g., ^{235}U)
SSC	System, Structure, and Component
SWTP	Sanitary Waste water Treatment Plant
TSCA	Toxic Substance Control Act
U	Uranium
UF_6	Uranium Hexafluoride

Acronym/Term	Definition
UNC	United Nuclear Corporation
USEI	US Ecology Idaho
vol. %	Percentage by volume
WAC	Waste Acceptance Criteria
Waste Container	Containers used to hold materials classified as *NCS Exempt Material* following operations in a WEA and/or MAA.
WHA	Waste Holding Area – area used to stage solid wastes generated from site remediation activities that have been categorized as *NCS Exempt Material*.
WEA	Waste Evaluation Area – area used to evaluate Non-NCS Exempt Materials for the purpose of fissile nuclide concentration or mass content determination.
wt. %	Percentage by weight

1.0 INTRODUCTION

This Nuclear Criticality Safety Assessment (NCSA) is provided to demonstrate that a criticality accident is not credible at the US Ecology Idaho (USEI) site due to the burial of decommissioning waste received from the Hematite site. The USEI activities include the receipt and burial of waste materials generated during final decommissioning of the Hematite site whereas the Hematite operations include the recovery and collection of contaminated waste, waste characterization, waste treatment, and off-site shipping preparation. This NCSA supplements a similar assessment documented in Reference 10, which addressed consignment of exhumed buried process wastes and contaminated soils to the USEI site for disposal.

The purpose of this NCSA is to document the evaluation of the risk of a criticality incident at the USEI site based on the process implemented, the very low concentrations of uranium associated with the site decommissioning wastes, and the disposal activities at the USEI Site. This NCSA is organized as follows:

- **Section 1** introduces the decommissioning activities at the Hematite site, namely, recovery and collection of contaminated waste, waste characterization, as well as the waste receipt and disposal activities at the USEI site.
- **Section 2** provides the risk assessment of the decommissioning waste burial operations outlined in Section 1.
- **Section 3** summarizes the important facility design features, equipment and procedural requirements identified in the criticality safety assessment provided in Section 2.
- **Section 4** details the conclusions of the NCSA for burial of Hematite decontamination and decommissioning waste at the USEI site.

1.1 Description of the Hematite Site

The Westinghouse Hematite site, located near Festus, MO, is a former nuclear fuel cycle facility that is currently undergoing decommissioning. The Hematite site consists of approximately 228 acres, although operations at the site were confined to the "central tract" area which spans approximately 19 acres. The remaining 209 acres, which is not believed to be radiologically contaminated, is predominantly pasture or woodland.

The central tract area is bounded by State Road P to the north, the northeast site creek to the east, the Union-Pacific railroad tracks to the south, and the site creek/pond to the west. The central tract area currently includes non-process buildings, a documented 10CFR20.304 burial area, two evaporation ponds, a site pond, concrete slab from the former process buildings, storm drains, sewage lines and associated drain field, and several locations comprising contaminated limestone fill.

1.2 Hematite Site History

Throughout its history, operations included the manufacturing of uranium metal and compounds from natural and enriched uranium for use as nuclear fuel. Specifically, operations included the conversion of uranium hexafluoride (UF_6) gas of various ^{235}U enrichments to uranium oxide, uranium carbide, uranium dioxide pellets, and uranium metal. These products were manufactured for use by the federal government and government contractors and by commercial and research reactors approved by the Atomic Energy Commission (AEC). Research and Development was also conducted at the facility, as were uranium scrap recovery processes.

The facility was used for the manufacture of low-enriched (i.e., ≤ 5.0 wt.% ^{235}U), intermediate-enriched (i.e., >5 wt.% and up to 20 wt.% ^{235}U) and high-enriched (i.e., > 20 wt.% ^{235}U) materials during the period 1956 through 1974. In 1974 production of intermediate and high-enriched material was discontinued and all associated materials and equipment were removed from the facility. From 1974 to cessation of manufacturing operations in 2001, the Hematite facility produced nuclear fuel assemblies for commercial nuclear power plants. In 2001, fuel manufacturing operations were terminated and the facility license was amended to reflect a decommissioning scope. Subsequently, as a result of decommissioning operations the process buildings have been demolished and the building demolition debris shipped off-site, with the exception of a few components. However, the building slabs and subsurface piping remain and will be remediated as part of the pending site-wide remediation operations.

1.3 Current State

This section describes the existing condition of the Westinghouse Hematite site, which is designated for Decontamination and Decommissioning. However, note that historic waste burials at the Hematite site are not addressed in this section. Refer to Reference 10 for a description of these historic waste burials at the Hematite site.

1.3.1 Subterranean Structures

Subsequent to cessation of manufacturing in 2001, several former process buildings remained until July 2011 when the former process buildings and select auxiliary buildings were demolished and reduced to grade level in support of final Decontamination and Decommissioning operations. Each of the former process buildings required a combination of storm water drains and lines, sanitation drains and lines, gray water drains and lines, and process drains and lines. Furthermore, there are approximately 7700 linear feet of subterranean piping located within the Hematite Facility, most of which are capped and/or abandoned. The sanitation lines are completely independent from the process and storm water lines and lead to sewage treatment systems. Three different sewage treatment systems have been used at the Hematite Facility. The first was a septic tank commissioned at the start of operations in 1956 and was taken out of service between 1977 and 1978, at which time the second system, which employed an aerated system, was placed in service and remained in service until mid 1991. These two systems filtered into a sand and gravel drain field. In 1991, a larger aeration system was placed in service, which bypasses the sand and gravel drain fields.

In order to excavate the subterranean structures such as piping, surrounding soil, and sewage systems, it is necessary to first remove any concrete slabs that are located on the surface of the ground above the piping. Consequent to building demolition activities, several thousand square feet of concrete slab remain. Spills of process materials during manufacturing operations at the Hematite site have been documented, thus providing potential for non-trivial contamination to be entrained within the concrete. Although, during active operations at the site, the concrete slabs involved in manufacturing operations subject to non-trivial contamination from spillage, were reportedly either scrubbed clean or scabbled and then re-surfaced by overlaying the contaminated concrete with an additional layer of concrete. Consequently, significant contamination on or within the concrete slabs is not expected. However, the presence of seams and cracks (which are characteristic of concrete structures) does provide a potential conduit for non-trivial contamination to migrate to the underlying soil/gravel. Therefore, it is possible that the soil/gravel underlying the concrete surfaces may exhibit contamination in excess of natural background.

To address the potential contamination concerns discussed above, a comprehensive radiological survey program was undertaken and completed during 2009 to provide radiological data to assist in quantifying the residual mass of ^{235}U associated with the concrete floors. In addition, concrete cores were extracted and analyzed for ^{235}U content, both of which concluded that the concrete slabs and underlying soil/gravel comprise no significant ^{235}U contamination. The results are further evaluated in the following subsections.

This evaluation assumes removal of all of the materials evaluated in this document, however, some of the materials may remain provided that they meet unrestricted release criteria.

1.3.2 Non-Production Buildings

Select buildings at the Hematite site were intentionally excluded from the building demolition scope with the intent of using these remaining buildings as functional areas to facilitate operations associated with decommissioning. Buildings 115, 235, and the Sanitary Waste water Treatment Plant (SWTP) were encompassed in the 2009 radiological characterization campaign, a small yet quantifiable amount of residual contamination is associated with these structures. The abovementioned non-production buildings are intended to be consigned to the USEI disposal site. Provided these remaining buildings are used as functional areas for operations associated with decommissioning, reanalysis of the structures will be performed to ensure the residual contamination does not contrast the data presented in the following subsections.

1.4 Waste Material for burial at USEI

Waste shipped from the Hematite site may include the following low level sources:

1. Debris generated from the demolition of the remaining auxiliary buildings/structures at the Hematite site;
2. Subterranean structures such as subterranean piping, underground utilities, sewage, and soil in the vicinity of the aforementioned subsurface structures;
3. Concrete and asphalt removed to gain access to underground utilities, piping and contaminated soil, and the septic drain field;

4. Miscellaneous items/components generated from the demolition of the former process buildings;
5. Exhumed burial waste from the Hematite burial pits and contaminated soils and backfill material associated with the Hematite burial pits and other remediation areas at the hematite site; and
6. Solids recovered from the Water Treatment System (i.e., used filter media, IX beds, solids in the holding tanks, etc.).

The process for consignment of the Decontamination and Decommissioning wastes to USEI is discussed in the following sub-sections*. Note the consignment of waste streams (5) and (6) are evaluated in Reference 10.

1.4.1 Subterranean Structures

In order to excavate the subterranean structures such as piping, surrounding soil, and sewage systems, it is necessary to first remove the overlying concrete slabs. Once the concrete slabs and/or other structures impeding access to the underlying subterranean material are removed, surface assays are performed to discern between *NCS Exempt Material*† and *Non-NCS Exempt Material*. Excavation of *Hot Spots* identified by the surface assay (if any) will be treated as *Non-NCS Exempt Material* and handled accordingly. Further excavation of the ground material beneath the concrete slabs would only be necessary if the *NCS Exempt Material* limit is not met and/or subsurface structures (e.g., piping and sewage systems) are present and require exhumation. Exposed piping, drainage systems (e.g., manholes) and sewage systems are either crushed in place, cut-up into sections, or lifted as one piece (intact), dependent upon the appropriate excavation method.

1.4.1.1 Concrete Slab Removal

As previously mentioned, consequent to building demolition activities, several thousand square feet of exposed concrete remain. In order to obtain access to the existing subterranean structures it is first necessary to remove the overlying concrete. Furthermore, spills of process materials during manufacturing operations at the Hematite site may have contaminated the overlying concrete. Especially spills involving solutions that may have comprised significant quantities of *Fissile Material*. However, the concrete slabs subject to non-trivial contamination from spillages during manufacturing operations, were either scrubbed clean or scabbled and then re-surfaced by overlaying the contaminated concrete with an additional layer of concrete. These remedial actions were performed during the manufacturing era and were likely necessary at the time to ensure that the subject areas could be safely occupied for manufacturing operations. However, *Fissile Material* could have potentially collected in pockets within cracks, expansion joints, and seams.

To address the potential for encountering significant quantities of *Fissile Material* associated with

---

* These sections provide a high level overview of planned D&D operations. The overview provided is intended to orient the reader and should not be construed as constituting a detailed process description.

† The determination of this category status is based on its ^{235}U concentration in relation to the 0.1 g^{235}U/L or mass quantity in relation to 15g ^{235}U within a volume occupying at least 5 liters.

contaminated concrete during decommissioning operations, an extensive radiological surface survey (non-destructive surface assay) was undertaken during 2009 for the purpose of providing radiological data to assist in quantifying the residual mass of ^{235}U associated with concrete surfaces (Reference 9). The radiological survey was then complemented by destructive analysis of cored-concrete and underlying soil/gravel samples, these efforts were undertaken during 2010 and 2011. Based on the data obtained from the aforementioned concrete characterization campaign, no significant ^{235}U contamination was identified. The results of the destructive analysis and non-destructive assays performed on the concrete slabs are presented in Sections 1.4.1.2 and 1.4.1.3, respectively.

1.4.1.2 Concrete Core Sampling

Twenty-one concrete core samples were collected from the floors of the former process buildings (Reference 22). Subsequently, the concrete core samples were destructively analyzed. The collected samples also included gravel and soil that was present under the concrete slabs. Figure 1.1 provides a schematic of the locations where concrete slab samples were collected. Note that the schematic of Figure 1.1 depicts a total of 28 samples, however, only samples #01 through #21 are floors samples and samples #22 through #28 are wall samples. Selection of the core sample locations was based on the following criteria:

- Concrete regions that are known, or are suspected, to have been resurfaced because of contamination during manufacturing operations, which was the basis for selecting the locations for samples #02 and #03.
- For portions of concrete that yielded relatively high count rates from the radiological surveys, such as core samples #02 and #21.
- For portions of concrete associated with cracks, expansion joints, or seams. An example is sample #13, which was cored from an expansion joint, a picture of this location is presented in Figure 1.2.
- Representative core samples not meeting the above criteria.

The analysis consisted of dividing each concrete sample into three axial sections: top ¼", middle ½", and the remainder of the concrete sample. Gravel or soil collected from underlying regions of the affected concrete sections were also analyzed. Results of the destructive analysis performed on the collected samples (Reference 22) are used to generate the data presented in Table 1.1 through Table 1.4. In generating the data of Table 1.1 through Table 1.4, a 3" diameter for the cored-samples and a density of 2.3 g/cm^3 for concrete are used. The data listed in Table 1.1 through Table 1.4 consist of the following:

- Table 1.1 : Delineation of the Cored-Concrete Samples
- Table 1.2 : Mass of the Cored Samples and Measured ^{235}U Enrichment
- Table 1.3 : ^{235}U Concentration Levels in Each Sample Segment and ^{235}U Concentration Levels Averaged Over Axial Height of Concrete Cored Sample
- Table 1.4 : ^{235}U Distribution within the Concrete Core Sample Sections

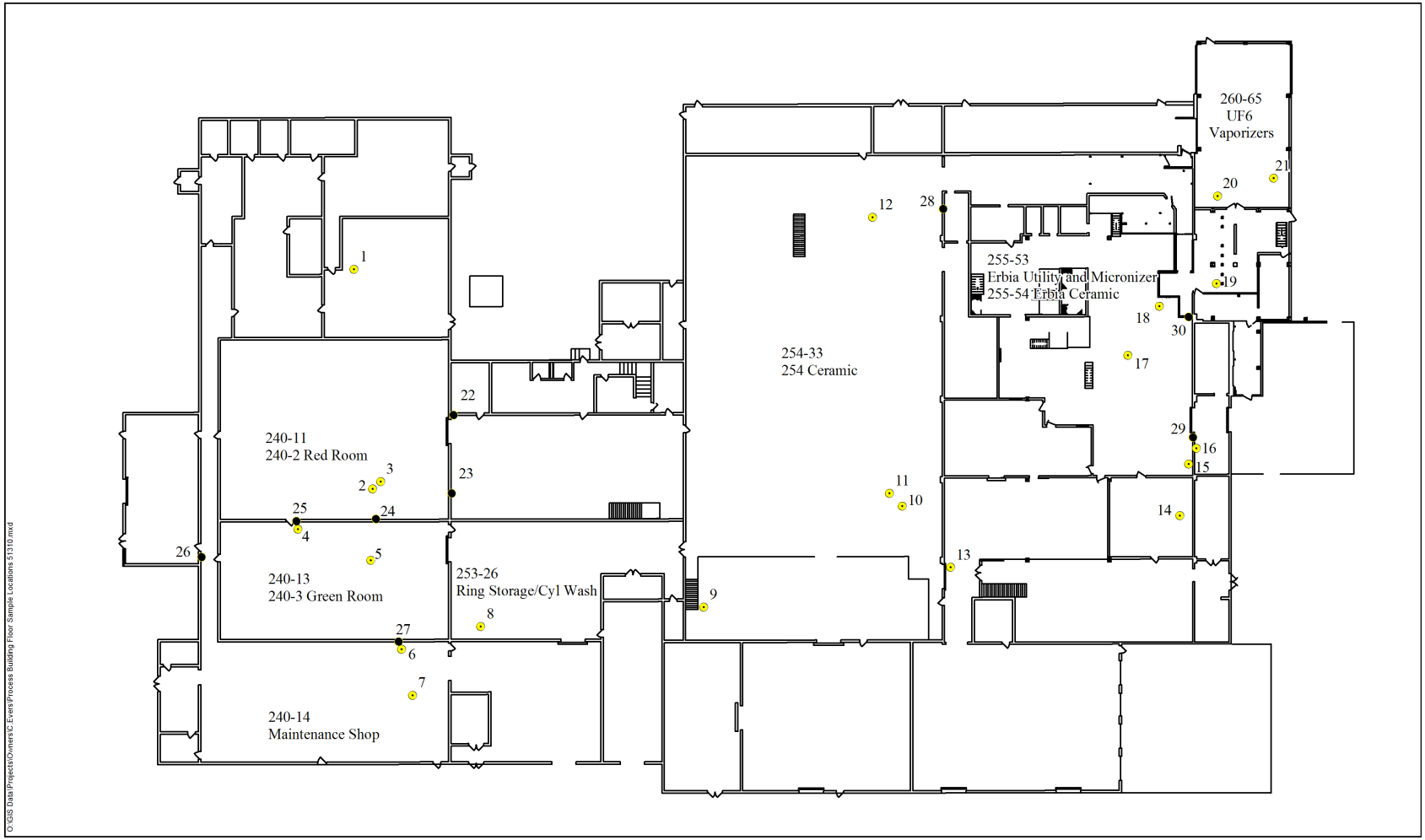

Source: Ref. 22

Figure 1.1 : Delineation of Concrete Samples Cored from the Hematite Site Process Buildings

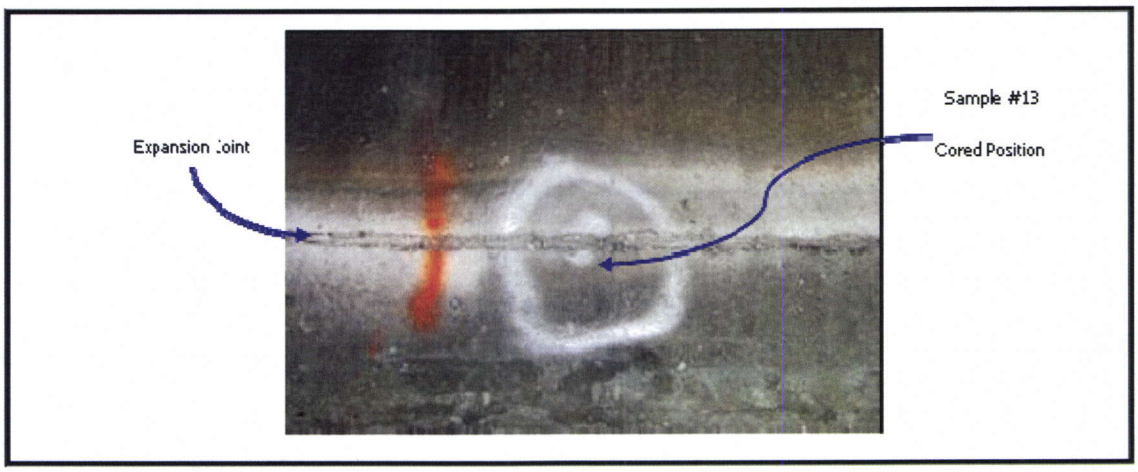

Figure 1.2 : Overview Image of an Expansion Joint (Sample #13 Cored Location)

Table 1.1 : Delineation of the Cored-Concrete Samples

Sample ID/Location	Resurfaced Concrete Regions	Expansion Joint, Crack, Seams, and/or Near Walls	Identified as a Hot Spot Location	Comments, if Any
#01		✓		
#02A	✓		✓	*Samples ID's ending with "A" indicate samples obtained from the newer (resurfaced) concrete region and those ending with "B" are from the older concrete regions.*
#02B				
#03A	✓	✓		
#03B				
#04		✓		
#05			✓	
#06		✓		
#07			✓	
#08			✓	
#09		✓		
#10			✓	
#11				Representative sample of the general area.
#12				Representative sample of the general area
#13		✓		
#14		✓		
#15				Representative sample of the general area
#16		✓	✓	
#17		✓	✓	
#18		✓		
#19				Representative sample of the general area
#20		✓		
#21			✓	

Source: Ref.24

Table 1.2 : Mass of the Cored Samples and Measured ^{235}U Enrichment

Sample Location	Average ^{235}U Enrichment	Top ¼" of the Concrete Sample	Middle ½" of the Concrete Sample	Remainder of the Concrete Sample	Underlying Soil/Gravel
#01	8.2%	62 g	125 g	1,160 g	650 g
#02A	3.8%	60 g	106 g	634 g	N/A
#02B	18.7%	85 g	136 g	579 g	960 g
#03A	3.5%	59 g	119 g	622 g	N/A
#03B	2.2%	75 g	113 g	612 g	1,930 g
#04	2.5%	113 g	122 g	1,290 g	1,280 g
#05	2.5%	96 g	187 g	1,620 g	1,010 g
#06	2.8%	66 g	120 g	1,080 g	1,000 g
#07	2.1%	61 g	118 g	1,250 g	1,420 g
#08	3.6%	85 g	125 g	1,090 g	980 g
#09	3.8%	75 g	114 g	1,340 g	1,490 g
#10	3.4%	73 g	120 g	1,780 g	N/A
#11	3.6%	73 g	118 g	1,110 g	1,590 g
#12	3.8%	63 g	120 g	2,050 g	1,430 g
#13	9.4%	102 g	137 g	870 g	1,350 g
#14	15.6%	53 g	138 g	2,530 g	880 g
#15	3.1%	70 g	125 g	1,190 g	960 g
#16	2.4%	70 g	133 g	1,750 g	1,060 g
#17	2.9%	147 g	230 g	1,290 g	1,280 g
#18	1.7%	90 g	138 g	1,100 g	1,120 g
#19	2.6%	73 g	124 g	3,040 g	1,190 g
#20	3.3%	82 g	120 g	2,450 g	1,060 g
#21	3.5%	74 g	124 g	2,400 g	1,270 g

Source: Ref. 24

Table 1.3 : ^{235}U Concentration Levels in Each Sample Segment and ^{235}U Concentration Levels Averaged Over Axial Height of Concrete Cored Sample

Sample Location	Top ¼" of the Concrete Sample	Middle ½" of the Concrete Sample	Remainder of the Concrete Sample	Average ^{235}U Concentration Over Axial Height of Concrete Core	Underlying Soil/Gravel
#01	6.7 mg/L	7.9 mg/L	4.5 mg/L	4.87 mg/L	2.1 mg/L
#02A	1,629.2 mg/L	0.5 mg/L	0.5 mg/L	122.7 mg/l	N/A
#02B	4.5 mg/L	0.2 mg/L	0.5 mg/L	0.9 mg/L	0.1 mg/L
#03A	770.0 mg/L	297.5 mg/L	72.2 mg/L	157.2 mg/L	N/A
#03B	5.1 mg/L	0.3 mg/L	0.5 mg/L	0.87 mg/L	117.3 mg/L
#04	72.4 mg/L	232.6 mg/L	182.8 mg/L	178.6 mg/L	27.1 mg/L
#05	2,415.7 mg/L	4.1 mg/L	1.0 mg/L	123.1 mg/L	31.4 mg/L
#06	1,499.7 mg/L	0.2 mg/L	0.3 mg/L	78.5mg/L	0.6 mg/L
#07	198.6 mg/L	0.2 mg/L	0.4 mg/L	8.9 mg/L	0.2 mg/L
#08	113.0 mg/L	0.1 mg/L	0.6 mg/L	7.9 mg/L	1.2 mg/L
#09	537.3 mg/L	0.2 mg/L	0.2 mg/L	26.6 mg/L	0.7 mg/L
#10	1,712.0 mg/L	0.1 mg/L	2.1 mg/L	65.2 mg/L	N/A
#11	63.6 mg/L	0.6 mg/L	2.7 mg/L	5.9 mg/L	0.2 mg/L
#12	215.6 mg/L	0.1 mg/L	0.2 mg/L	6.3 mg/L	0.3 mg/L
#13	94.6 mg/L	18.5 mg/L	10.6 mg/L	19.3 mg/L	20.9 mg/L
#14	20.6 mg/L	16.1 mg/L	15.2 mg/L	15.4 mg/L	23.7 mg/L
#15	23.4 mg/L	0.1 mg/L	1.1 mg/L	2.2 mg/L	5.3 mg/L
#16	605.0 mg/L	0.3 mg/L	0.4 mg/L	22.1 mg/L	6.7 mg/L
#17	50.7 mg/L	228.2 mg/L	2.5 mg/L	37.9 mg/L	0.4 mg/L
#18	30.5 mg/L	55.0 mg/L	12.8 mg/L	18.4 mg/L	5.0 mg/L
#19	187.5 mg/L	137.9mg/L	0.7 mg/L	10.2 mg/L	1.9 mg/L
#20	101.2 mg/L	0.3 mg/L	0.2 mg/L	3.4 mg/L	15.3 mg/L
#21	7,620.8 mg/L	3.3 mg/L	51.5 mg/L	264.8 mg/L	5.7 mg/L
Averaged of All Samples	781.7 mg/l	43.7 mg/L	15.8 mg/L	51.5 mg/L	12.7 mg/L

Source: Ref. 24

Table 1.4 : ^{235}U Distribution within the Concrete Core Sample Sections

Sample Location	Top ¼" of the Concrete Sample	Middle ½" of the Concrete Sample	Remainder of the Concrete Sample
#01	35.11%	41.42%	23.47%
#02A	99.94%	0.03%	0.03%
#02B	86.68%	3.43%	9.89%
#03A	67.56%	26.10%	6.34%
#03B	87.44%	4.63%	7.93%
#04	14.85%	47.68%	37.47%
#05	99.79%	0.17%	0.04%
#06	99.96%	0.01%	0.02%
#07	99.66%	0.12%	0.21%
#08	99.43%	0.08%	0.49%
#09	99.92%	0.04%	0.05%
#10	99.87%	0.01%	0.12%
#11	95.09%	0.87%	4.04%
#12	99.87%	0.05%	0.08%
#13	76.50%	14.92%	8.57%
#14	39.68%	31.06%	29.26%
#15	94.85%	0.50%	4.65%
#16	99.87%	0.06%	0.07%
#17	18.01%	81.10%	0.89%
#18	31.02%	55.94%	13.05%
#19	57.49%	42.28%	0.23%
#20	99.46%	0.30%	0.24%
#21	99.29%	0.04%	0.67%

Source: Ref. 24

The data presented in Table 1.1 through Table 1.4 indicate the following:

- Table 1.2 indicates that the majority of the samples exhibited low-enriched ^{235}U levels (≤ 5 wt.% ^{235}U).
- Although Table 1.3 indicates a number of samples yielded relatively high ^{235}U content levels* in their upper ¼" thickness (highest sample is #21 with 7,621 mg-^{235}U/L followed by sample #05 with 2,416 mg-^{235}U/L), the following are also noted:
  - That when the ^{235}U contamination is averaged over the entire lengths of samples #21 and #05, the result is 264.8 and 123.1 mg-^{235}U/L, respectively.
  - That the ^{235}U contamination confined to the top ¼" of the samples when averaged over all samples is 782 mg-^{235}U/L, and the ^{235}U contamination averaged over the entire length of all samples is only 51.5 mg-^{235}U/L.

* These sample locations have been selected based on identification as localized hotspots from the radiological surveys and do not represent ^{235}U concentration levels that are characteristic of general areas of the former process buildings.

- That previously scabbled concrete regions (samples #02B and #03B) have relatively low ^{235}U contamination levels, which further indicates that the scabbling effort previously performed was successful in reducing the amounts of ^{235}U contamination to insignificant levels (≤ 6 mg-^{235}U/L in the upper ¼" surface). The ^{235}U concentration averaged over the entire lengths of samples #02B and #03B is found to be 0.9 mg-^{235}U/L for both samples (from Table 1.3), which is more than a factor of 110 below the *NCS Exempt Material* criteria of 0.1 g^{235}U/L.

- Table 1.4 indicates the following:
  - Samples collected from areas that are not identified as having cracks, expansion joints, seams, or have not been identified as previously resurfaced have the majority of their ^{235}U contamination (> 95%) confined to the upper ¼" surface of the concrete with insignificant ^{235}U contamination residing within their underlying regions.
  - Samples (#06, #09, and #16) that have been collected from areas near seams, cracks, expansion joints, or walls, also have their ^{235}U contamination (> 99.7%) confined to the upper ¼" surface of the concrete.
  - Sample #02A, which was collected from a resurfaced concrete section (and not near cracks, expansion joints, or seams), also has its ^{235}U contamination (> 99.9%) confined to the upper ¼" surface of the concrete.

- Table 1.3 indicates that the largest level of ^{235}U contamination in the underlying soil/gravel region is beneath sample #03B and is found to be at a concentration level of 117 mg-^{235}U/L. Recall sample #03B is a resurfaced concrete region that has been previously scabbled and is a sample identified as being cored from near an expansion joint, crack or seam. All other gravel/soil samples have ^{235}U contamination levels that are well below the *NCS Exempt Material* criteria of 0.1 g^{235}U/L (≤100 mg-^{235}U/L).

1.4.1.3 Concrete Surface Assay

As indicated previously, a comprehensive radiological survey program was undertaken during 2009 to provide radiological data to assist in quantifying the residual mass of ^{235}U associated with building surfaces (floors, walls, ceilings, and roof) of the Hematite Facility former process and auxiliary buildings. Results of the radiological survey were used to evaluate and to provide estimates for the mass and areal density of ^{235}U associated with the building surfaces (Ref. 9). The analytical method used involved correlating the observed count rate in a sodium iodide (NaI) detector used in close-proximity scans of building surfaces, to a ^{235}U areal density. A calibration between the mass per unit area (i.e., areal density) of ^{235}U contamination and observed count rate was determined based on independent measurements of selected contaminated surfaces using a high-purity germanium (HPGe) detector. The analyses documented in Reference 9 utilized the MCNP code to obtain the ^{235}U area densities and total ^{235}U for the concrete floor slabs the results of these studies are presented in Table 1.5. The corresponding area delineations for the Hematite facility former process buildings listed in Table 1.5 are outlined in Figure 1.3.

Table 1.5 : Assayed ^{235}U Areal Densities and Total ^{235}U on the Concrete Floors of the Hematite Facility

Location	Area Description	Average Area Density, g-$^{235}U/ft^2$	Area, ft^2	^{235}U, g
Former Process Buildings [2]	1	0.036	17,056	614
	2	0.018	8,444	152
	3	0.022	30,273	666
	4	0.02	21,950	439
	5	0.073	6,397	467
Former Auxiliary Buildings [3]	Bldg-115	0.016	450	7.2
	Bldg-245	0.016	31	0.5
	SWTP	0.001	2,100	2.1
	Bldg-101, Tile Barn – Floor 1	0.021	2,962	62.2
	Bldg-101, Tile Barn – Floor 2	0.019	3,126	59.4
	Bldg-120, Red Barn – Floor 1	0.019	1,905	36.2
	Bldg-120, Red Barn – Floor 2	0.016	1,938	31
	Bldg-235	0.063	379	23.9
	Bldg-252	0.119	1,049	124.8
Total		0.027	98,060	2,685

Source: Ref. 24

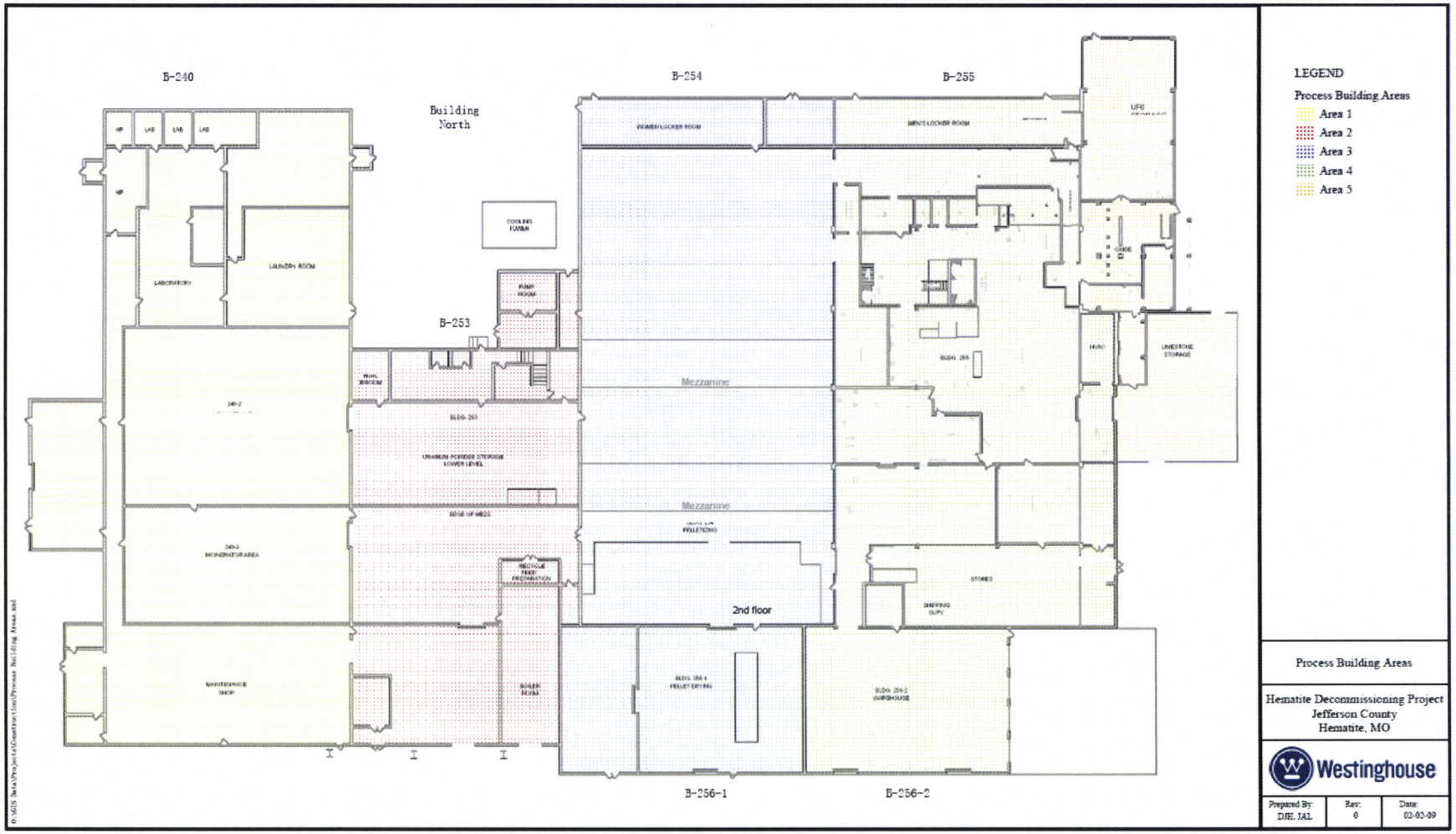

Source: Reference 8

Figure 1.3 : Hematite Site Process Buildings and Delineation of Facility Areas

Provided that Table 1.5 represents the ^{235}U that would be present on the concrete slabs upper surfaces only and not in their substrate, scaling factors were derived to account for attenuation of the ^{235}U gammas through the substrate. Reference 20 documents results of an assessment of scaling factors that would be appropriate for converting surface based mass estimates into volumetric based mass estimates for concrete with various contamination depth profiles. Although analysis for the cored concrete samples presented in Section 1.4.1.2 indicate that the bulk of ^{235}U contamination is confined within the upper ¼" of the concrete slabs, a contamination penetration depth of ½" is conservatively selected.* Reference 20 has determined that a scaling factor of 1.7 is appropriate for ^{235}U contamination that is uniformly distributed† throughout a ½" concrete substrate. This scaling factor is applied to the ^{235}U areal densities and to the mass estimates listed in Table 1.5, results of which are presented in Table 1.6.

Table 1.6 : Adjusted Total ^{235}U due to a Penetration Depth of ½" in the Concrete Substrate of the Hematite Facility Former Process and Auxiliary Buildings

Location	Area Description	Area, ft^2	^{235}U, g	^{235}U Concentration per Concrete Cut-Depth, g/L				
				½"	1"	1½"	2"	3"
Former Process Buildings [2]	1	17,056	1043.8	0.052	0.026	0.017	0.013	0.009
	2	8,444	258.4	0.026	0.013	0.009	0.006	0.004
	3	30,273	1132.2	0.032	0.016	0.011	0.008	0.005
	4	21,950	746.3	0.029	0.014	0.010	0.007	0.005
	5	6,397	793.9	**0.105**	0.053	0.035	0.026	0.018
	Total of All Process Buildings	84,120	3974.6	0.040	0.020	0.013	0.010	0.007
Former Auxiliary Buildings [3]	Bldg-115	450	12.2	0.023	0.012	0.008	0.006	0.004
	Bldg-245	31	0.9	0.023	0.012	0.008	0.006	0.004
	SWTP	2,100	3.6	0.001	0.001	0.000	0.000	0.000
	Bldg-101, Tile Barn – Floor 1	2,962	105.7	0.030	0.015	0.010	0.008	0.005
	Bldg-101, Tile Barn – Floor 2	3,126	101.0	0.027	0.014	0.009	0.007	0.005
	Bldg-120, Red Barn – Floor 1	1,905	61.5	0.027	0.014	0.009	0.007	0.005
	Bldg-120, Red Barn – Floor 2	1,938	52.7	0.023	0.012	0.008	0.006	0.004
	Bldg-235, West Vault	379	40.6	0.091	0.045	0.030	0.023	0.015
	Bldg-252, South Vault	1,049	212.2	**0.171**	0.086	0.057	0.043	0.029
	Total of All Auxiliary Buildings	13,940	590.4	0.036	0.018	0.012	0.009	0.006
Total of All Process and Auxiliary Buildings		98,060	4565.0	0.039	0.020	0.013	0.010	0.007

Source: Ref. 24

Table 1.6 indicates the following:

- Bldg-252, an auxiliary building, has the highest ^{235}U concentration in its concrete floors than all other buildings. However, because of its relatively small area (< 1,000 ft^2), the total amount of ^{235}U contained within its concrete floor is ≈200 g^{235}U.
- The total amount of ^{235}U present in the floor regions of all auxiliary building is less than 590 g^{235}U.

* Results presented in Section 1.4.1.2 that indicate a penetration depth of greater than ¼" are only observed for cored samples collected from expansion joints, cracks, or seams. Gammas emitted from these regions do not experience the extent of attenuation as gammas emitted from the concrete substrate, and therefore applying a penetration depth of ½" is also bounding for concrete regions that have expansion joints, cracks, or seams.

† It is noted that a uniform contamination distribution assumption is conservative because the ^{235}U contamination would be expected to be peaked toward the surface of the concrete.

- Area 3 of the former process buildings has the highest amount of ^{235}U, at ≈1,150 g^{235}U. However, because of its large area (≈30,000 ft^2), the concentration of ^{235}U that is trapped within the upper ½" of its floor regions is well below the *NCS Exempt Material* criteria of 0.1 g^{235}U/L.
- The total amount of ^{235}U present in the floor regions of all Hematite facility buildings is less than 4,565 g^{235}U. However, Table 1.6 also indicates, with the exception Building 252, that the ^{235}U concentration confined in only the upper ½" of all floor regions is well below the *NCS Exempt Material* criteria of 0.1 g^{235}U/L.

1.4.2 Soil Exhumation Surrounding Substructures

As formerly noted, in order to excavate the subterranean structures such as piping and treatment systems, it is necessary to first remove soil and overlying material (e.g., gravel and stones) that cover subterranean structures*. Evident from the tables presented in Section 1.4.1.2, the permeable characteristics of solid concrete (i.e., concrete free of seams and cracks, etc.) clearly repudiates *fissile material* from migrating to a depth such that non-trivial contamination would reach the underlying material beneath the concrete slabs. Thus, seams and cracks in the concrete structures exposed to spills involving solutions serve as the only credible conduits for *fissile material* to enter the overlying material covering the subterranean structures. That being said, wet operations (i.e., operation that involved solutions containing ^{235}U) were confided to Building 240 and Building 260, and are the only areas of concern from a NCS perspective. Consequently, the material (e.g., soil and gravel) under Building 240 and Building 260 will be subject to surface assay measurements. Once the surface assay measurements have concluded, excavation of areas that are found to be below the *NCS Exempt Material* criteria can be performed without the application of NCS controls. Consequently, soil that is found to exceed *NCS Exempt Material* criteria is removed and packaged into a *Field Container* and the material will be subject to further evaluation. Once the contaminated soil is exhumed, two independent surface assays are once again performed for the newly exposed regions of soil.

However, if an area of soil is found to exceed *NCS Exempt Material* criteria, then the associated portion is removed and packaged into a *Field Container* and subject to a primary evaluation/assay measurement and a secondary independent evaluation/assay measurement, both of which will be independently verified to determine radiological content. In order to be shipped to the USEI site for burial, the evaluation/assay results must demonstrate that the content of the contaminated soil does not comprise greater than 0.1 g^{235}U/L. In the event that the contaminated soil is established to meet the 0.1 g^{235}U/L *NCS Exempt Material* criteria at the Hematite site, the materials will be aggregated with other bulk waste streams. In addition, material meeting the *NCS Exempt Material* criterion of

* Note that the soil covering the subterranean structures is carefully removed in accordance with the soil exhumation requirements until the subterranean structures are encountered, at which time, subterranean structures exhumation procedures and processes are then invoked.

no more than 15g ^{235}U within an enclosed volume occupying at least 5L* may be aggregated with other bulk waste streams provided that the average concentration of the combined waste materials does not exceed 0.1g ^{235}U/L. Note that 'average concentration' here and elsewhere in this NCSA is defined as the total ^{235}U mass content (in grams) of the combined waste materials divided by the total volume (in Liters) of the combined waste materials. Material that exceeds the *NCS Exempt Material* criteria may be commingled with other low level waste and re-evaluated (e.g., in the Waste Evaluating Area (WEA)/ Material Assay Area (MAA)) for fissile nuclide content. Provided that the re-evaluation demonstrates that the average concentration of the commingled waste materials does not exceed 0.1 g^{235}U/L then the material may be consigned to the USEI site for disposal, as either individual consignments or aggregated with other bulk waste streams categorized as *NCS Exempt Material*.

1.4.3 Subterranean Piping Removal

In preparation for excavation of the subsurface piping (evaluated in Reference 24), an extensive in-pipe survey effort was conducted in 2010 for the purpose of providing radiological data to assist in quantifying the residual mass of ^{235}U in subsurface piping that reside mainly beneath the former process buildings at the Hematite site. More than one thousand feet of subsurface piping was surveyed. Results of the in-pipe radiological survey were used to provide bounding estimates of the mass of ^{235}U present as holdup in the subsurface piping associated with the Hematite facility former process buildings. Because the assayed pipe length represents a significantly large sample, and the assayed pipes represent pipes with drains that were in the vicinity of the fuel manufacturing operations, results of the in-pipe radiological surveys are also expected to be a bounding representation of the ^{235}U activity in all other subterranean piping.

A set of independent measurements† will be performed on the subterranean piping to ensure the ^{235}U concentration does not exceed *NCS Exempt Material* criteria. Once the independent assay measurements confirm the pipe section(s) meets the *NCS Exempt Material* criteria the section may be transferred to an appropriate stockpile in a WHA. Subterranean piping established to exceed the *NCS Exempt Material* criteria for USEI will be transferred using an appropriate container and subject to a primary evaluation/assay measurement and a secondary independent evaluation/assay measurement, both of which will be independently verified to determine the precise *fissile nuclide* content. Consequently, significant portions of the piping system are believed to be composed of concrete or vitrified clay, due to the nature of decommissioning operations it is expected that significant portions of piping will be inadvertently crushed. Prior to exhuming the debris (i.e., mixture of pipe contents, piping material, and any soil/stones/gravel), a set of independent surface assays are performed on the debris. The assay performed on the crushed piping and handling requirements are identical in function and method to exhumation of soil surrounding subterranean structures.

---

* The acceptability of the consignment to the USEI site of material designated as *NCS Exempt Material* based on the criteria of no more than 15 g^{235}U within an enclosed volume occupying at least 5L is specifically addressed in Section 2.4.7.

† Note internal in-situ radiological surveys of the sub-surface piping coupled with visual data may serve in lieu of the two external independent measurements.

In order to be shipped to USEI for burial, the evaluation/assay results must demonstrate the subterranean piping does not contain an average ^{235}U concentration greater than 0.1 g^{235}U/L. In the event that the subterranean piping is established to meet the 0.1 g^{235}U/L *NCS Exempt Material* criteria at the Hematite site, the material will be aggregated with other bulk waste streams. Material meeting the other *NCS Exempt Material* criterion of no more than 15g ^{235}U within an enclosed volume occupying at least 5L* may be aggregated with other bulk waste streams provided that the average concentration of the combined waste materials does not exceed 0.1g ^{235}U/L. Material that exceeds the *NCS Exempt Material* criteria may be commingled with other low level waste and re-evaluated (e.g., in the WEA/MAA) for fissile nuclide content. Provided that the re-evaluation demonstrates that the average concentration of the commingled waste materials does not exceed 0.1 g^{235}U/L then the material may be consigned to the USEI site for disposal, as either individual consignments or aggregated with other bulk waste streams categorized as *NCS Exempt Material*.

1.4.4 Sewage/Septic Treatment Tank and Drain Field and Drain Line Extraction

The Hematite site contains two sewage treatment systems and a concrete septic tank, all of which were connected to the lavatories within the former process buildings. Note that only a single sewage treatment system and the associated sanitation lines and drain lines remain in service. The older sewage treatment tank and concrete septic tank were previously abandoned in place, filled with gravel, and are embedded in the ground near the current sewage treatment tank. The two decommissioned systems' tanks filtered into a common sand and gravel drain field, i.e., separate from the drain line used for the sewage treatment system currently in use.

Prior to exhuming the content of the current sewage treatment tank, sanitation lines leading to the treatment tank will be exhumed and disposed of in the manner outlined in Section 1.4.3, "*Subterranean Piping Removal*." If the sanitation lines leading to the current sewage treatment tank were found to meet the *NCS Exempt Material* criteria, and the linear ^{235}U activity decreases as the sanitation lines approach the current sewage treatment tank, then it is reasonable to assume that the sewage treatment tank will also meet *NCS Exempt Material* criteria. This is because if any uranium was discarded into the sanitation lines, the bulk of the discharged ^{235}U will be deposited in the elbow and trap sections of the sanitation lines that are closest to their source drains. This assumption is supported by results of the in-pipe radiological surveys of the subsurface piping that reside mainly beneath the former process buildings at the Hematite site. The in-pipe radiological survey concluded that, when measurable dose rates (dose rates above background levels) were encountered, the highest observed dose rates were measured at the elbow section of the surveyed pipes. As measurements were taken downstream from the elbow sections, the measured dose rates decreased. However, if the sanitation lines are demonstrated to contain material exceeding the *NCS Exempt* criteria, or exhibited non-declining linear ^{235}U activity as the sanitation lines approach the current sewage treatment tank, the subject treatment tank will then be assumed to contain *Fissile Material*.

---

* The acceptability of the consignment to the USEI site of material designated as *NCS Exempt Material* based on the criteria of no more than 15 g^{235}U within an enclosed volume occupying at least 5L is specifically addressed in Section 2.4.7.

Soil surrounding the current sewage treatment tank is conservatively treated as soil that potentially contains ^{235}U concentrations above the *NCS Exempt Material* criteria. If the soil that surrounds the current sewage treatment tank has been determined to not exceed the *NCS Exempt Material* limit, the soil is treated as waste and dispositioned accordingly. However, if a portion of the soil is determined to exceed *NCS Exempt Material* criteria, then the associated portion is removed and packaged in a *Field Container* and subject to primary evaluation/assay measurement and secondary independent evaluation/assay measurement.

If the soil in the vicinity of the current sewage treatment tank is found to meet *NCS Exempt Material* criteria, then it is very reasonable to assume that either no leaks from the treatmenttank has occurred, or if leaks have occurred, then the sewage tank should also meet the *NCS Exempt Material* criteria. Conversely, if the soil in the vicinity of the current sewage treatment tank is demonstrated to contain *Fissile Material*, then the sewage tank must be assumed to contain fissile material.

Based on the above discussion, it is considered acceptable to assume the current sewage treatment tank meets the *NCS Exempt Material* criteria if:

- The sanitation lines leading to the current sewage treatment tank are found to meet the *NCS Exempt Material* criteria, and the linear ^{235}U activity decreases as the sanitation lines approach the sewage tank;

  AND

- The soil in the vicinity of the current sewage treatment tank is found to meet the *NCS Exempt Material* criteria.

However, by design, treatment tanks collect organic material allowing solids or solutions denser than water to settle or layer in the bottom of the tank, therefore, any uranium (solids or solutions) discarded into sanitation lines during fuel manufacturing operations that have reached the current sewage treatment tank would be expected to have settled to the bottom. Based on this premise it is considered prudent to require two independent surface assay measurements of the current sewage treatment tank targeted for exhumation.

Based on these considerations, excavation of the drain line tied to the current sewage treatment system can be initiated <u>after</u> excavation of the treatment tank. If the content of the current sewage treatment tank is determined to meet *NCS Exempt Material* criteria, then it is very reasonable to assume that the associated drain line will also meet *NCS Exempt Material* criteria. Conversely, if any of the current sewage treatment tank contents are determined to contain *Non- NCS Exempt Material* then the associated drain line* and the sewage treatment tank structure are assumed to contain *Non- NCS Exempt Material*. Following determination that the content of the current sewage

* Note that only the perforated tubes, drain line, and soil/rock/sand/gravel beneath the tubes are considered to constitute the drain field (i.e., not the soil above the tubes).

treatment tank meets *NCS Exempt Material* criteria, the treatment tank content is carefully exhumed and the exhumed material is transferred to an appropriate stockpile in a WHA. If a portion of the current sewage treatment tank content is determined to exceed *NCS Exempt Material* criteria, then the associated drain line will be excavated in accordance with the soil exhumation procedure and subterranean piping removal procedure. The resultant debris will be subject to primary evaluation/assay measurement and secondary independent evaluation/assay measurement.

However, this approach cannot be used for the decommissioned sewage treatment tank or concrete septic tank. Based on the premise that both of the aforementioned treatment tanks have been decommissioned, the material residing within the treatment tanks cannot be interpreted as representative of the material in the associated common drain field (i.e., filled with gravel). Thus, the common drain field will be disposed of in accordance with the soil exhumation procedure and subterranean piping removal procedure.

In the event that the sewage treatment tanks and septic tank material are established to meet the 0.1 g^{235}U/L *NCS Exempt Material* criteria at the Hematite site, the sewage treatment tanks and septic tank material will be aggregated with other bulk waste streams. Material meeting the other *NCS Exempt Material* criterion of no more than 15g ^{235}U within an enclosed volume occupying at least 5L* may be aggregated with other bulk waste streams provided that the average concentration of the combined waste materials does not exceed 0.1g ^{235}U/L. Material that exceeds the *NCS Exempt Material* criteria may be commingled with other low level waste and re-evaluated (e.g., in the WEA/MAA) for fissile nuclide content. Provided that the re-evaluation demonstrates that the average concentration of the commingled waste materials does not exceed 0.1 g^{235}U/L then the material may be consigned to the USEI site for disposal, as either individual consignments or aggregated with other bulk waste streams categorized as *NCS Exempt Material*.

1.4.5 Components Remaining as a result of Building Demolition Operations

A comprehensive radiological survey program was undertaken during 2009 to provide radiological data to assist in quantifying the residual mass of ^{235}U associated with the former process buildings (since been demolished), including piping, ventilation ducts, and miscellaneous items/components remaining within the former process building that exhibited elevated radiation levels. MCNP calculations were performed and documented in Reference 12 and 13 estimating the ^{235}U mass associated with items anticipated for consignment at the USEI site.

Specific D&D operations concerning the remaining equipment, piping, ventilation ducts, and miscellaneous items/components were undertaken prior to and post building demolition operations. The objective of these D&D operations, for the purpose of this assessment, were to prepare the abovementioned items for removal and decontaminate select items to ensure they meet the relevant criteria for transportation and off-site disposal at the USEI site. Note that the material collected during decontamination activities is not intended to be consigned to the USEI disposal site.

---

* The acceptability of the consignment to the USEI site of material designated as *NCS Exempt Material* based on the criteria of no more than 15 g^{235}U within an enclosed volume occupying at least 5L is specifically addressed in Section 2.4.7.

Table 1.7 provides a list of the explicit equipment, piping, ventilation ducts, and miscellaneous items/components that have been subject to decontamination. Each of these items are intended for disposal at the USEI site. Following decontamination, additional fixative was applied to the contaminated surfaces of these items, as necessary, from a contamination control standpoint. Based on the results of recent characterization work, it is apparent that these items have little to no loose UO_2 holdup. Since the items listed in Table 1.7 are intended for disposal at the USEI site, this NCSA assumes that the items will be consigned to the USEI site as part of the decommissioning waste. This underlying assumption is reinforced by the CSCs established in Section 2.4 and summarized in Section 3.0, which require confirmatory action prior to final packaging and transportation for off-site disposal at the USEI site.

Table 1.7 : List of Items Targeted for Consignment to the USEI Site as Part of Decontamination and Decommissioning Waste

Item Description	Item 235-U grams	Total Approximate Weight (grams)	WAC in pCi/g	Maximum Allowable pCi	Actual pCi/g	Total 235-U in pCi	Percentage Level Below WAC
HEPA 1 240-12	8.03	1,171,320	115	134,701,800	15.09	17,671,375	86.88%
HEPA 2 240-12	7.08	1,171,320	115	134,701,800	13.29	15,566,993	88.44%
HEPA 3 253-26	7.08	1,171,320	115	134,701,800	13.29	15,566,993	88.44%
HEPA 7 254-35	13.88	1,171,320	115	134,701,800	26.07	30,534,394	77.33%
HEPA 18 255-51	9.25	1,171,320	115	134,701,800	17.37	20,348,825	84.89%
HEPA exhaust duct 240-12; y-duct at blow er 240-12	1.68	60,836	115	6,996,140	60.85	3,702,064	47.08%
Stack Flange-240	1.33	32,234	115	3,706,910	90.47	2,916,055	21.33%
Exhaust Blow er 240-12	0.43	181,600	115	20,884,000	5.16	936,670	95.51%

Source: Original

1.4.6 Waste Generated as a part of Demolition of Select Auxiliary Building

The Auxiliary Buildings remaining at the Hematite site encompass Buildings 235, 115, and the Sanitary Waste Treatment Plant (SWTP) shed, all of which may be subject to demolition upon cessation of their use. Figure 1.4 provides an illustration depicting site location of the aforementioned structures.

Special Nuclear Material (SNM) was handled in Building 235 during plant operations, but was emptied in an earlier decommissioning phase and is currently empty. Building 115 was built in 1992 and known as the Fire Pump House. Building 115 housed a diesel-powered generator and fire water pump, and has no history of radioactive material use. As previously mentioned Buildings 115 and 235 may be used as functional areas to facilitate future decommissioning operations. Furthermore, operations conducted in these building will involve introduction of material that will be enclosed within approved containers, in addition, the operations will be conducted using controlled processes. However, prior to demolition of Buildings 115 and 235, contaminated materials will be removed. These assumptions on operational practice are reinforced by the CSCs established in Section 2.4 and summarized in Section 3.0, which require confirmatory action prior to initiation of building demolition activities.

No decontamination operations are planned within the Hematite site Building 235 and 115 prior to their demolition, other than the removal of any contaminated materials as described, provided reanalysis of the structures do not contrast the waste acceptance criteria for disposal at the USEI site.

The SWTP shed historically received discharge from multiple site structures during operation of the facility. The SWTP received water from sinks, toilets, showers and drinking fountains. The SWTP was also used to receive laundry water (after the water was filtered and held for sampling) and waste water from the former process water demineralizer system and laboratory sinks. The SWTP shed consists of a series of settling and aeration tanks and an adjacent building that contains data logging and electronic instrumentation, floor drains and an open work area. The portions of this system that have been impacted by licensed activities are limited to the process components in contact with waste water that have the potential to collect solids that settle from the suspension. Prior to demolition of the SWTP shed, the equipment described above will be removed and separately dispositioned. This assumption on operational practice is reinforced by the CSCs established in Section 2.4 and summarized in Section 3.0, which require confirmatory action prior to initiation of building demolition activities.

As a part of the 2009 site buildings radiological characterization program, surveys were performed to provide radiological data to assist in quantifying the residual mass of ^{235}U associated with the surfaces of Buildings 235, 115, and the Sanitary Waste Water Treatment Plant, including the floors, walls, and ceilings. The radiological survey results are presented in Table 1.8, which summarize the ^{235}U mass and average areal density estimates derived for the building surfaces.

Table 1.8 : ^{235}U Mass and Areal Density Estimates Derived for the Surfaces (Floors, Walls, Ceilings, and Roof) of Buildings 235 and 252

Building	Building Structure	Mass Estimate ($g^{235}U$)	Average Areal Density Estimate ($g^{235}U/ft^2$)
235	Floors	36.2	0.0628
	Walls and Ceilings Combined	4.2	0.0013
115	Floors	2.8	0.0162
	Walls and Ceilings Combined	10.8	0.0013
SWTP	Floors	3	0.0098
	Walls and Ceilings Combined	1.2	0.0011

Source: High/High estimates from Table 3-6 and 3-8, Ref. 14

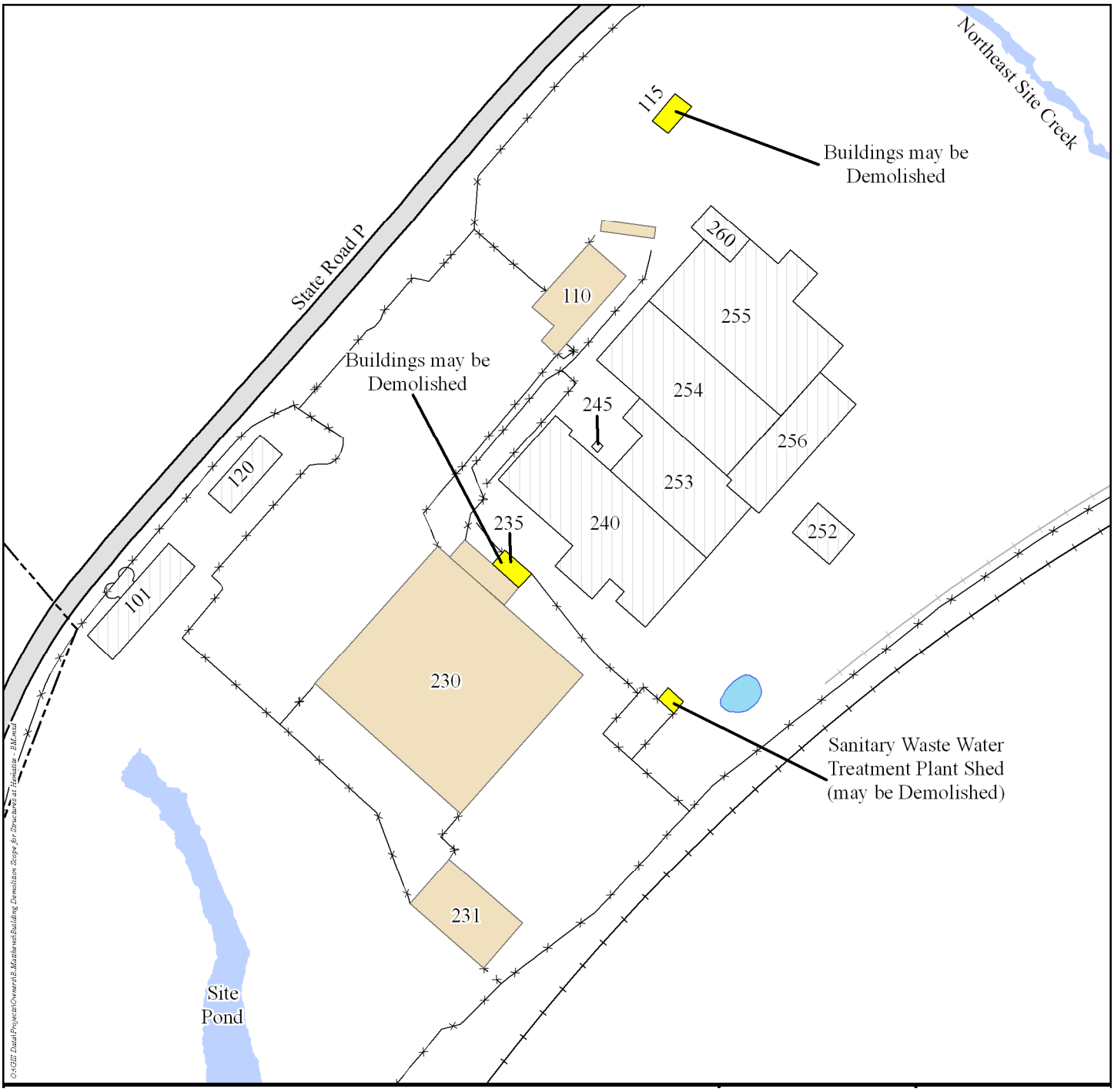

Source: Original

Figure 1.4 : Hematite Site Buildings that may be Demolished and Consignment to the USEI site for Disposal

1.5 USEI Site Description

US Ecology Idaho (USEI), Inc., owns and operates a hazardous waste treatment, storage, and disposal facility located approximately 10.5 miles west of Grand View, Idaho (See Figure 1.5.). The USEI facility lies far from population centers in an arid climate with low annual rainfall and a high evaporation rate. The 160-acre site in Owyhee County is located on more than 1,000 contiguous acres of land owned by USEI. These factors, in combination with thick sub-surface layers of highly impermeable silts, clays, and sediments, make the site ideally suited for the secure treatment and disposal of hazardous and industrial wastes. USEI manages hazardous waste under a Resource Conservation and Recovery Act (RCRA) Part B Operating Permit (IDD073114654) issued on November 12, 2004 by the State of Idaho.

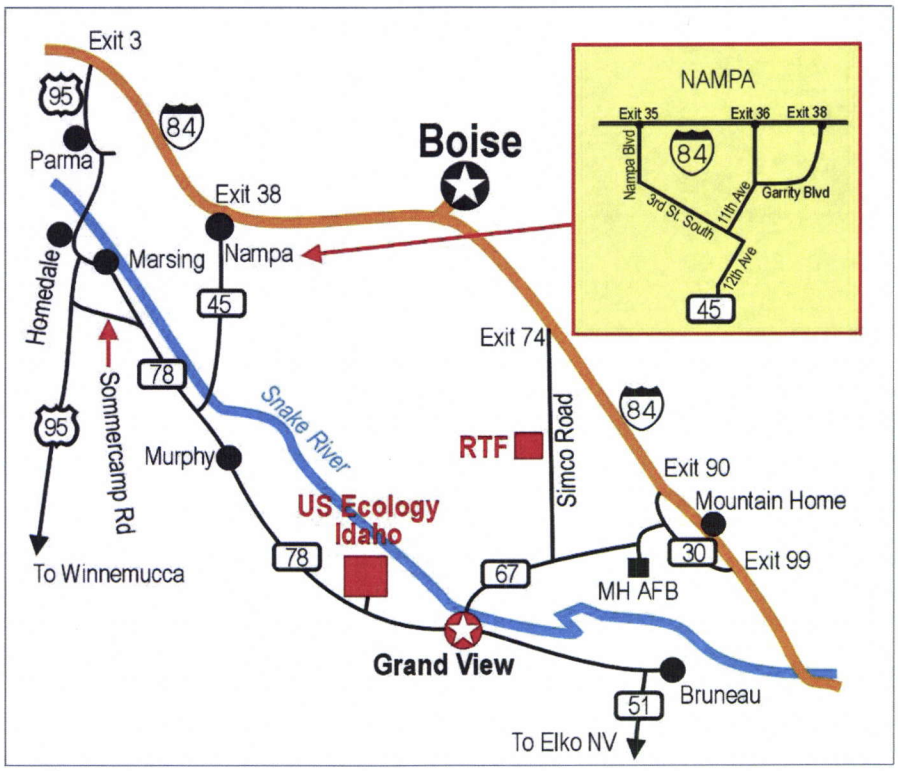

Source: Ref. 7

Figure 1.5 : USEI Location Map

The USEI facility received a state permit to accept an expanded range of low-activity radioactive materials in 2001, and the permit has been amended several times since then. The facility's state RCRA Part B Operating Permit was renewed for a 10-year period in 2004. USEI is fully permitted to manage RCRA, Toxic Substances Control Act (TSCA), and the Comprehensive Environmental Response Compensation and Liability Act (CERCLA) wastes, and NRC-exempted radioactive waste. The facility provides waste management services including chemical stabilization of organic and inorganic solids, sludges and liquids, along with landfill disposal, aqueous evaporation treatment, debris treatment, and PCB management and disposal.

USEI offers rail transportation service to the facility from all points in the continental United States (refer to Figure 1.6 and Figure 1.7). Nearly 2,000,000 tons of wastes have been received at the Rail Transfer Facility in the last three years, demonstrating an ability to handle large environmental remediation projects.

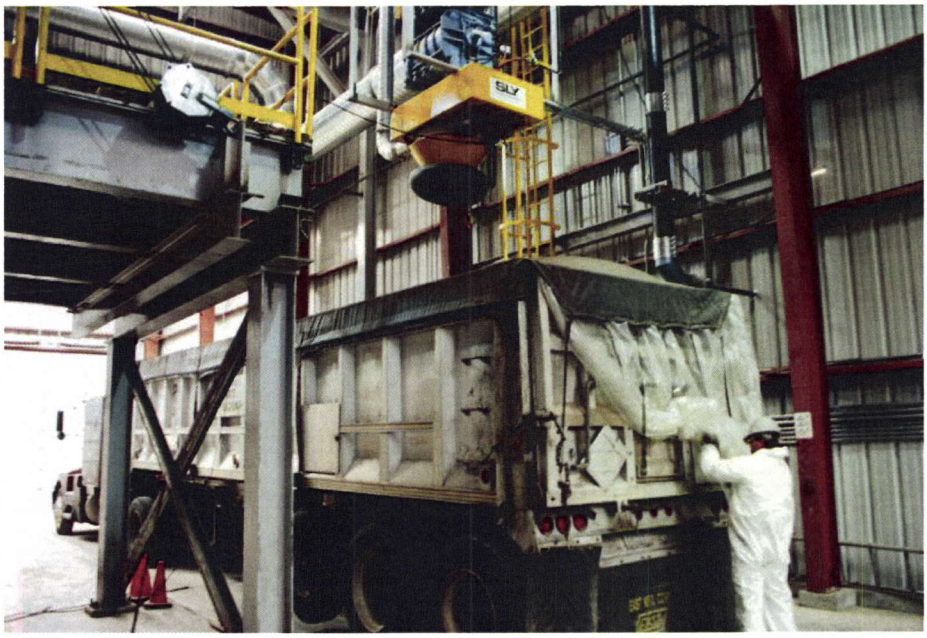

Source: Ref. 7

Figure 1.6 : USEI Rail Transfer Facility Interior

Source: Ref. 7

Figure 1.7 : USEI Rail Transfer Facility Exterior

1.6 USEI Site History

The USEI site was originally constructed as a U.S. Air Force Titan 1 Missile Complex and eventually decommissioned by the U.S. Air Force in 1965. In 1973, the State of Idaho permitted Western Containment, Inc. (Wes-Con) to dispose industrial waste at the site. Wes-Con received and disposed industrial and PCB wastes in trenches and in portions of the abandoned Titan Missile silos. In 1980, Wes-Con submitted a Part A notification under the Resource Conservation and Recovery Act (RCRA) for hazardous waste disposal. Envirosafe Services of Idaho, Inc. (ESII) purchased the site in 1981 and was granted RCRA interim status the same year. ESII obtained a RCRA Part B Operating Permit on December 15, 1988, and a TSCA Storage and Disposal Permit on November 29, 1991. The facility was purchased by American Ecology Corporation in January 2001, and renamed US Ecology Idaho, Inc. in May 2001.

The history of construction at the USEI site is summarized below:

- 1984: The first double-lined landfill cell constructed.
- 1988: Outdoor Stabilization Facility constructed.
- 1990: Phase I of the second double-lined cell (Cell 14) constructed.
- 1993: Phase II of Cell 14 completed.
- 1994: Debris Handling Facility completed.
- 1998: New Containment Building housing the stabilization units completed.

- October 2003: USEI's newest landfill, Cell 15, completed and disposal operations commenced.
- 2005: Cell 15 Phase II expansion completed.
- 2007: Cell 15 Phase III expansion completed.

1.7 Facility Description

1.7.1 Geography

The USEI facility is located off Highway 78 approximately 10.5 miles west of the town of Grand View, in Owyhee County, Idaho. Grand View has a population of 350. The nearest residence is 1 mile southwest of the site.

The site is situated on a one-mile wide plateau that slopes from south to north. Maximum surface relief on the facility is 90 feet and the mean surface elevation is 2600 feet above sea level. The site is located in a desert environment with an average rainfall of 7.26 inches per year and an average evaporation rate in excess of 42 inches per year.

Castle Creek, the nearest surface water, is an intermittent creek located one-half mile west of the site that lies topographically 150 feet below the facility. The Snake River, the largest surface water source near the site, lies approximately 2½ miles north and 350 feet in elevation below the facility. EPA site evaluations indicate little possibility of site flooding due to a number of factors, primarily low rainfall, high evaporation, and location of the facility outside the 100-year flood plain.

The facility is located within seismic zone 2 and therefore does not require a seismic standard demonstration under 40 CFR Part 264 Appendix IV.

Currently, USEI has eighteen (18) Piezometers and thirty-nine (39) monitoring wells screened within two aquifers below the site. In accordance with USEI Part B R and TSCA permits, pH, specific conductivity, and a custom list of 28 VOCs are sampled semi-annually. Sampling for PCB analysis is performed each year. Groundwater sampling is performed in accordance with the requirements of USEI's current operating permit. Analysis is completed by a certified contract laboratory. The results of the semi-annual groundwater sampling and analysis activities are submitted to IDEQ semi-annually, in accordance with the requirements of USEI's RCRA Part B Permit, and to U.S. EPA Region 10 each year, in accordance with the requirements of USEI's TSCA permit.

Runoff due to rain is managed through an engineered drainage collection and containment system. The system directs runoff from the interior of the site into one of three on-site RCRA Surface Impoundments. A run-on diversion system prevents run-on from entering the facility.

Site drainage and run-off controls are designed to contain and control run-off from a 25-year, 24-hour storm (1.75 inches of precipitation). Active waste disposal, storage, and treatment operations are segregated from uncontaminated areas by a series of diversion berms and channels. The control system consists of drainage swales, engineered grades, drainage conduits, flumes, riprap, and surface

impoundments.

A system of interceptor channels collects and conveys run-off from the active waste handling areas to the rain water Surface Impoundments/Collection Ponds. Runoff from clean areas to the active area is prevented by a series of dikes and channels around active units. Run-off may be transferred from Collection Ponds 1, 2, and 3 and routed to the Evaporation Pond for solar evaporation.

Runoff from the active areas of Cells 5, 14 and 15 are collected within the unit and transferred to storage tanks and treated as multi-source leachate. Once the leachate has been treated to below Land Disposal Restrictions (LDRs), leachate is routed to the primary Evaporation Pond (also a RCRA Surface Impoundment) for solar evaporation.

1.7.2 Landfill Cells

Two RCRA/TSCA landfills are actively used to dispose of containerized solids, bulk solids, and electrical equipment (i.e., small capacitors, transformer carcasses, etc.).

Construction of Cell 15 was initiated on March 1, 2003 and the cell was in operation by October 2003. Phase I of Cell 15 provided about 1,000,000 cubic yards of cell space. When all phases are complete Cell 15 is designed to contain over 3.6 million cubic yards of material (refer to Figure 1.8). Second phase construction was completed in 2005, and third phase construction was completed in 2007.

Source: Ref. 7

Figure 1.8 : First Load of Waste in Cell 15

1.7.2.1 Landfill Cell Liner System

USEI's landfill liner system for cells 14 and 15 consists of a dual composite liner with a leak detection system overlying the primary liner. See Figure 1.9 for liner installation and Figure 1.10 for a schematic depiction. The liner system was constructed from bottom to top as indicated:

- Subgrade: In-situ compacted silty, sandy soil.
- Secondary Soil Liner: Minimum 36-inches of recompacted clay with a permeability of less than 1×10^{-7} cm/sec.
- Secondary Flexible Membrane Liner: 60 or 80-mil high density polyethylene.
- Leak Detection Zone: Composite layer consisting of a synthetic drainage net, geotextile fabric, 12-inches of stone, and a secondary geotextile fabric.
- Primary Flexible Membrane Liner: 60 or 80-mil high density polyethylene.
- Primary Leachate Collection Zone: Composite layer consisting of a synthetic drainage net, geotextile fabric, 12-inches of sand, and a second geotextile fabric.
- Protective Layer: 12-inches of compacted soil.

Source: Ref. 7

Figure 1.9 : Cell 15 Liner Installation

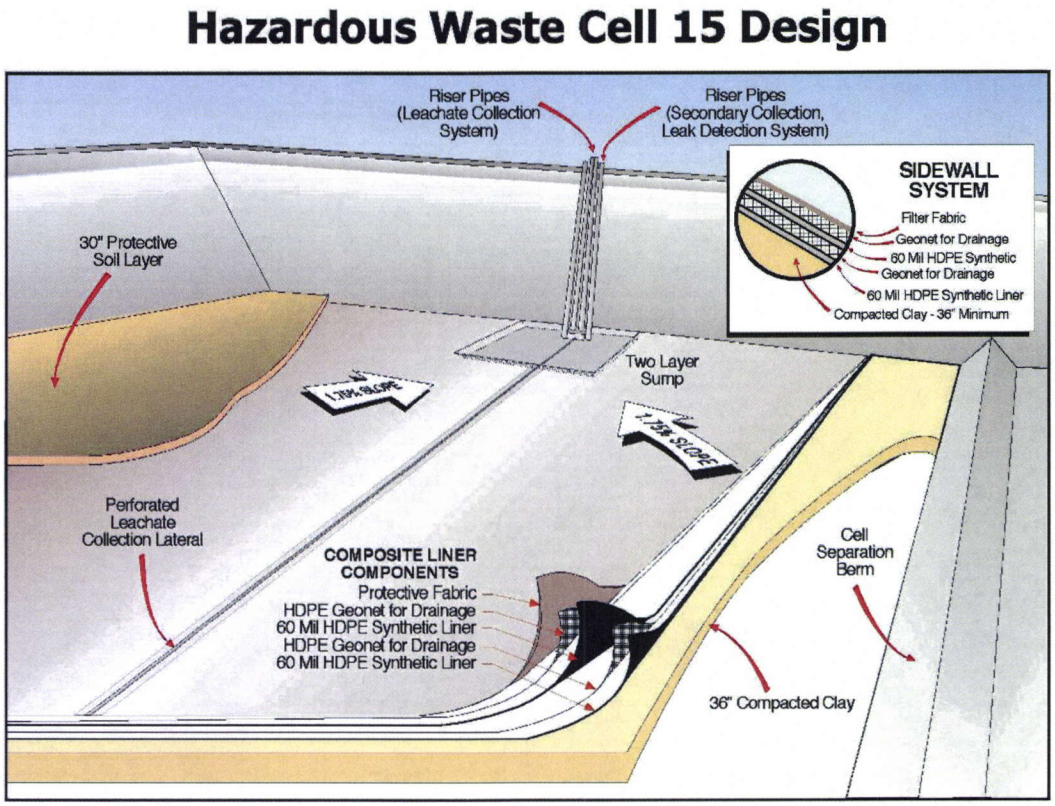

Source: Ref. 7

Figure 1.10 : Schematic of Cell 15 Design

1.7.2.2 Leachate Collection, Inspection and Treatment

The leachate collection system drains and traps moisture and liquids percolating through the landfill. The leachate collection system is protected from clogging by a geotextile filter and protected from physical disturbance by 6-inches of soil. Cells are graded so that liquids drain towards the leachate collection system. The sumps are pumped according to a Leachate Management Schedule outlined in USEI's operating permits.

Leachate levels are checked weekly in the primary leachate systems and daily in the secondary leak detection collection and removal system. Both sumps are checked in the event the facility receives more than ½ inch of rainfall in a 24-hour period. Leachate is pumped and removed in accordance with action levels established in the Part B Permit. Records are maintained for each pumping event. Pumping records indicate leachate levels before and after pumping, the volume pumped, and the on-site dispensation of the leachate.

The leachate is managed in accordance with 40 CFR Part 268.7, using a carbon absorption system. The treated leachate is stored until the required testing is completed. Upon passing the required parameters, the leachate is disposed in the solar evaporation pond.

1.7.3 Surface Impoundments

USEI has three RCRA-permitted surface impoundments for the collection of storm water runoff (Rainwater Collection Ponds 1, 2, and 3). A fourth RCRA-permitted impoundment is primarily used for solar evaporation (Evaporation Pond 1 – refer to Figure 1.11).

USEI's Surface Impoundments are constructed with dual synthetic liner systems and associated leak detection capabilities. The Storm-water pond liner systems are constructed as indicated from bottom to top:

- Subgrade: In-situ compacted silty, sandy soil.
- Secondary Flexible Membrane Liner: 40-mil Medium Density Polyethylene.
- Leak Detection Zone: Composite layer consisting of a geotextile fabric, 12 inches of sand, and a collection pipe.
- Primary Flexible Membrane Liner: 60-mil High Density Polyethylene.
- Protective layer: 12 inches of sand, geotextile fabric and 6 inches of stone.

The Evaporation Pond liner system is constructed in a slightly different fashion to place a flexible membrane liner on the surface:

- Subgrade: In-situ compacted silty, sandy soil.
- Secondary Flexible Membrane Liner: 40-mil Medium Density Polyethylene.
- Leak Detection Zone: Composite layer consisting of a geotextile fabric, 12 inches of sand, and a collection pipe.
- Primary Soil Liner: 12 inches of compacted clay with permeability of less than 1×10^{-6} cm/sec.
- Primary Flexible Membrane Liner: 80-mil High Density Polyethylene.

Source: Ref. 7

Figure 1.11 : Evaporative Surface Impoundment

1.8 Managing Wastes for Treatment and Disposal

The Receiving Department enters all waste management information into the Company's American Ecology Standard Operating Platform (AESOP) system (i.e., weights, reagents, constituents, concentrations, disposal locations, etc.). Depending on the waste in question, wastes received at USEI may be placed in temporary storage, or sent to one of the stabilization units, the debris handling facility, or directly land-filled. In regards to the Hematite waste, approximately 95% of the wastes will be directly land-filled (i.e., no treatment), with the remaining 5% expected to require stabilization for RCRA regulated metals. Upon final waste placement, three-dimensional disposal coordinates are recorded on a Work Order Supplement and associated electronic database (AESOP).

1.8.1 Processing Containerized Waste

Waste streams with similar waste codes, characteristics and compatibility are typically consolidated for batch treatment. For example:

- F006, 7, 8, 9, 11, 12, 19 waste streams are usually combined.
- D004-011 waste streams are usually combined.

Batches are analyzed after treatment to ensure that all treatment standards for all waste codes in the batch have been met. Containers of debris are also consolidated for treatment; however, there are no concentration-based standards for encapsulation. Instead, the requirements of 40 CFR Part 268.45 and USEI's permit must be met to ensure that debris was treated for each contaminant subject to treatment.

Containers of waste that do not require further treatment are placed directly into the landfill, based upon compatibility. The coordinates of the containerized wastes are recorded to permit retrieval in the future, if for any reason this is desired.

1.8.2 Processing Bulk Wastes

Bulk wastes requiring treatment may be off-loaded into three different areas; 50-cubic yard stabilization bins at the Stabilization Plant, 100-cubic yard stabilization tanks in the Stabilization Building, or onto the sort floors in the Debris Handling Facility. Alternatively, containerized bulk waste may be stored in one of USEI's RCRA storage areas. Waste off-loaded directly into bins or tanks can be treated immediately. Wastes that are off-loaded onto the sort floors typically need additional handling prior to treatment. Downsizing, sorting, chemical stabilization, encapsulation, crushing and other handing may be required prior to treatment.

Bulk wastes destined for direct landfill are directed to the landfill cell specified on the WPQ summary sheet after inspection and approval for receipt. Waste locations in the landfill are based upon compatibility, and disposal locations are recorded.

1.9 Scope of Assessment

This scope of this NCSA is limited to safe handling and disposal at the USEI site of Hematite site decommissioning waste derived from the site remediation operations. Specifically, subterranean piping, concrete slabs, sewage treatment systems, and soil in the vicinity of the aforementioned subsurface structures; miscellaneous items/components generated from the demolition of the former process buildings; and contaminated equipment generated during Decontamination and Decommissioning operations. All of these waste streams are evaluated in a manner that considers the resultant potential increase in the ^{235}U concentration of the site waste materials.

1.10 Methodology

1.10.1 Approach

This NCSA uses a risk-informed approach. Risk insights, gained from the findings of the risk assessment, are used to establish aspects of the design and process that are susceptible to faults important to nuclear criticality safety.

The risk informed approach is complemented with an As Low As Reasonably Achievable (ALARA) assessment that is focused on identifying practicable measures that can be reasonably implemented to further reduce the risk of criticality to a level as low as is reasonably achievable. The ALARA assessment also serves to provide an additional degree of confidence that a criticality incident resulting from the activities assessed is not credible.

In summary, the approach used in this NCSA is as follows:

1. Establish the margin of safety between normal (i.e., expected) conditions and foreseen credible abnormal conditions.

2. Determine whether the inherent margin of safety is sufficient to safely accommodate the credible deviations from normal conditions, and if not, identify feature(s) of the process* that are important to ensuring criticality safety under all credible conditions.
3. Establish what additional practicable measures, if any, can reasonably be implemented to ensure that the risks from criticality are as low as is reasonably achievable.

1.10.2 Method of Criticality Control

The criticality safety basis for the disposal of waste materials derived from the Hematite site decommissioning operations is based on assuring that all decommissioning wastes consigned to the USEI site satisfy the concentration limit established for their safe disposal.

* In the selection of safety controls, preference is placed on use of engineered controls over procedural controls.

2.0 CRITICALITY SAFETY ASSESSMENT

The criticality safety assessment is organized as follows:

- **Section 2.1** describes the hazard identification technique employed in the criticality safety assessment of waste disposal at the USEI site and provides a summary of the hazard identification results.
- **Section 2.2** outlines the generic assumptions used in the criticality safety assessment.
- **Section 2.3** contains the criticality safety assessment of waste disposal at the USEI site under normal (i.e., expected) conditions.
- **Section 2.4** contains the criticality safety assessment of waste disposal at the USEI site under abnormal (i.e., unexpected) conditions.

2.1 Criticality Hazard Identification

This section outlines the technique used to identify criticality hazards associated with the Hematite waste disposal at the USEI site. A summary of the hazards identified is also provided, together with a brief description of their disposition in the NCSA.

2.1.1 Hazard Identification Method

The hazard identification technique employed in this criticality safety assessment uses a *What-if* analysis where the remediation approach and overall objectives are scrutinized and examined against postulated situations, focused on challenging criticality safety. As part of this process, the *What-if* analysis steps through the eleven (11) criticality parameters to determine the extent of their importance to criticality safety.

The eleven (11) criticality parameters examined include:

- Geometry
- Interaction
- Mass
- Isotopic/Enrichment
- Moderation
- Density
- Heterogeneity
- Neutron Absorbers
- Reflection
- Concentration
- Volume

The eleven (11) parameters listed above are traditionally considered in criticality safety assessments

for operating facilities processing and possessing Special Nuclear Material (SNM). Typically, the non-processed based nature of decommissioning operations and associated residues limits the ability to control many parameters, resulting in the need to use bounding values for parameters in the NCSA in many instances.

2.1.2 Hazard Identification Results

A summary of the criticality hazards identified from the *What-if* analysis is presented in Table 2.1. Hazards that are capture in Table 2.1 were identified during a previous hazard identification meeting performed for buried waste and contaminated soil (Reference 10), consequently, the hazards are considered to also capture all of the upsets relevant to the scope of materials addressed in this NCSA, because the identified hazards are not dependent on the waste material types. Hazards that result in events with similar consequences and safeguards are grouped in single criticality accident event sequences, analyzed in Section 2.4.

Table 2.1: Criticality Hazards Identified from the What-if Analysis

What-if…	Causes	Consequences	Accident Sequence in NCSA
Geometry			
There are no identified hazards associated with geometry because the safety assessment is based on safe concentration for an infinite system.			
Interaction			
Wrong waste is loaded for shipment.	• Procedure non-compliance.	Potential interaction between packages that may normally require spacing.	**Section 2.4.6**
Mass			
Wrong waste is loaded for shipment.	• Procedure non-compliance.	Potential to exceed a maximum safe mass of ^{235}U in a localized area.	**Section 2.4.6**
There is a reconfiguration of ^{235}U solids in a waste cell.	• Uranium dissolution and migration due to ground water and/or water from precipitation.	Potential to exceed a maximum safe mass of ^{235}U in a localized area. Potential to exceed a maximum safe mass of ^{235}U in the leachate or evaporation pond(s).	**Section 2.4.7**
The package/shipment is improperly characterized.	• Procedure non-compliance.	Potential to exceed a maximum safe mass of ^{235}U in a localized area.	**Section 2.4.1** **2.4.2, 2.4.3, 2.4.4, and 2.4.5**
Isotopic/Enrichment			
There are no identified hazards associated with presence of variable enrichment uranium. This is because the safety assessment is conservatively based on subcritical limits derived for uranium metal at maximum theoretical density, with 100 wt.% ^{235}U/U enrichment.			
Moderation			
There are no identified hazards associated with moderation of uranium particulates. This is because the safety assessment is conservatively based on subcritical limits derived for uranium-H_2O mixtures at optimum concentration.			
Density			
There are no identified hazards associated with presence of variable density uranium. This is because the safety assessment is conservatively based on subcritical limits derived for uranium metal at maximum theoretical density.			

What-if…	Causes	Consequences	Accident Sequence in NCSA
Heterogeneity			
There are no identified hazards associated with heterogeneity of uranium. This is because the safety assessment is conservatively based on subcritical limits derived for homogeneous uranium-H_2O mixtures (with 100 wt.% ^{235}U/U enrichment), for which subcritical limits are smaller than equivalent heterogeneous uranium-H_2O mixtures.			
Neutron Absorbers			
There are no identified hazards associated with absence of fixed neutron absorbers. This is because the safety assessment does not credit fixed neutron absorbers.			
Reflection			
There are no identified hazards associated with reflection of uranium. This is because the safety assessment conservatively uses subcritical limits based on full (i.e., 30 cm) thickness close fitting water, concrete, and/or soil reflection conditions, which are considered to bound any credible reflection condition.			
Concentration			
Wrong package(s) are shipped.	• Procedure non-compliance.	Potential to exceed a maximum safe concentration of ^{235}U in a localized area.	**Section 2.4.6**
There is a reconfiguration of ^{235}U solids in a waste cell.	• Uranium dissolution and migration due to ground water and/or water from precipitation.	Potential to exceed a maximum safe concentration of ^{235}U in a localized area. Potential to exceed a maximum safe concentration of ^{235}U in the leachate or evaporation pond(s).	**Section 2.4.7**
The package/shipment is improperly characterized.	• Procedure non-compliance.	Potential to exceed a maximum safe concentration of ^{235}U in a localized area.	**Section 2.4.1** **2.4.2, 2.4.3, 2.4.4 and 2.4.5**
Volume			
Volume control is not viable due to the large volume of waste to be shipped.			

2.2 GENERIC CASE ASSUMPTIONS

The activities considered in this criticality safety assessment relate to the processes as defined in Section 1. This section outlines the generic assumptions on which this criticality safety assessment is based.

2.2.1 Fissile Material Assumptions

The pertinent underlying assumptions of the assessment related to the *fissile material* that may be encountered in these activities are as follows:

- This assessment does not consider fissile nuclides other than ^{235}U. Based on the history of the Hematite site and site documentation (refer to Sections 1.2 and 1.3), there is no expectation that fissile nuclides other than ^{235}U could exist within the Hematite site boundary. In the event that any SNM associated with buried wastes, soils or backfill materials are discovered to contain fissile nuclides other than ^{235}U, a stop work order will be issued.
- *Fissile material* limits have been derived assuming homogeneous mixtures of ^{235}U with water (H_2O) and soil. This approach is conservative with respect to other *fissile materials* containing uranium, including soils, process wastes, and host rock.
- The Hematite waste received at the USEI site will either be consigned directly to a waste cell or if treated, e.g., to remove VOCs, the treatment will not result in the significant concentration of ^{235}U.

2.2.2 Operational Practice Assumptions

- Prior to demolition of the Buildings 235 and 115, all contained radioactive materials will have been removed and segregated. In addition, the building surfaces will have been verified to not comprise greater ^{235}U contamination than the waste acceptance criteria for disposal at the USEI site. This assumption is reinforced by the CSCs summarized in Section 3.0.
- Prior to demolition of the SWTP Shed, all contaminated SWTP equipment will have been removed and the shed surfaces will have been verified to not comprise greater ^{235}U contamination than currently exists, as documented in this NCSA. This assumption is reinforced by the CSCs established in Section 2.4.
- All other pertinent underlying assumptions of this NCSA related to operational practice and equipment use are described and documented in Section 1.

2.3 NORMAL CONDITIONS

This section contains the criticality safety assessment of decommissioning waste assuming under normal (i.e., expected) conditions. Under anticipated conditions Hematite decommissioning wastes derived from the waste streams outlined in Section 1.4 will contain low concentrations of ^{235}U, not exceeding the USEI waste acceptance limit of 0.1 $g^{235}U/L$. This limiting value is significantly smaller than the minimum critical infinite sea concentration of 1.4 $g^{235}U/L$ (39.6 $g^{235}U/ft^3$) for a fictitious bounding medium consisting of only SiO_2 and ^{235}U (NUREG/CR-6505 Vol. 1), affording a large margin of safety at the USEI site under normal conditions. Furthermore, in practice, the margin of safety is much greater since SiO_2 represents a conservative media on which to base a minimum critical concentration limit because of its very small neutron capture cross-section compared to the materials that would comprise decommissioning waste. Note the consignment of waste streams (5) and (6) in Section 1.4 are evaluated in Reference 10.

2.3.1 Concrete Slab Anticipated Conditions

Under normal conditions, former processing building concrete slabs are anticipated to have only contamination that is confined within upper surface regions of the slabs. This expectation is based on prior decommissioning activities and on operational practices during the manufacturing era, which would have required floor surfaces to be periodically cleaned. Furthermore, this expectation is validated in Reference 22, where analyses of concrete core samples, which were biased to cracks, expansion joints, seams, and *Hotspots* for reasons discussed in Section 1.4.1.2, indicate that nearly all of the ^{235}U contamination is confined to the upper ½" of the concrete surface (results obtained from Reference 22 that support this expectation are summarized in Table 1.4). In addition, the surface contamination of the concrete is anticipated to be fixed based on prior decommissioning activities (i.e., an epoxy based fixative was applied post building demolition activities). The concrete and asphalt walkways and pathways on-site are not anticipated to be contaminated. This is because these areas would have not been subjected to ^{235}U contamination due to "non-production use". Furthermore, Table 1.6 in Section 1.4.1.3 indicates that for a 3" layer of concrete* the ^{235}U concentration is expected to be significantly less than the 0.1 $g^{235}U/L$ *NCS Exempt Material* criteria. Based on the discussion provided above, it is clear that the removal of the foundations associated with the concrete slabs will not result in an unanalyzed condition during normal operations.

2.3.2 Underlying Soil Anticipated Conditions

Under normal conditions, soil surrounding subterranean piping that is not in the vicinity of pipe breaches or cracks is anticipated to meet *NCS Exempt Material* criteria, because the piping would have provided a barrier against entrainment of uranium into the surrounding soils. The soil surrounding subterranean piping that is in the vicinity of pipe breaches or cracks and the soil that is near concrete slabs that were exposed to wet fuel manufacturing operations in the former process buildings are conservatively anticipated to exceed *NCS Exempt Material* criteria, whereas soil near or under concrete slabs that are outside the environs of wet fuel manufacturing operations are conservatively anticipated to be below *NCS Exempt Material* criteria. This assumption is judged to be conservative based on sample analysis of underlying gravel and soil cored from beneath the

* Thicknesses of the concrete slab regions in the Hematite former process and auxiliary buildings range from 4" to 12".

former process building concrete slabs, which include samples of soil/gravel cored through concrete slab regions that were determined from the radiological survey to constitute *Hotspots* (Reference 9 and 22). Results of the sample analysis, reproduced in Table 1.3, indicate that the highest observed ^{235}U concentration in the sampled gravel/soil is ≤ 30 mg ^{235}U/L (≤ 0.03 g^{235}U/L), which is significantly below the *NCS Exempt Material* criteria of 0.1 g^{235}U/L, in addition, a factor of 46 below a subcritical limit of 1.4 g^{235}U/L for a bounding soil (SiO_2 only) and the maximum subcritical infinite sea concentration of 4.0 g^{235}U/L for nominal soil (Appendix A).

However, cored-sample analysis of the underlying soil/gravel regions collected from beneath concrete sections involving wet fuel manufacturing operations that exhibited cracks, expansion joints, and seams indicate that the highest ^{235}U concentration. Particularly sample #3 from Table 1.3 yielded 117 mg^{235}U/L (0.117 g^{235}U/L), which is slightly above the *NCS Exempt Material* criteria of 0.1 g^{235}U/L. However, the underlying soil/gravel sample was obtained through a crack from the resurfaced concrete region involving wet fuel manufacturing operations, which indicates the referenced concrete section was subjected to significant levels of contamination. Hence, it is not expected that the 0.114 g^{235}U/L represents ^{235}U concentration levels in the general underlying ground regions. Note the maximum observed concentration of underlying soil is approximately factor of twelve below a fictitious minimum critical concentration of 1.4 g^{235}U/L for bounding soil consisting of only SiO_2 per NUREG/CR-6505 (Ref. 5).

Based on the above discussion, underground utility electrical lines and gas lines are anticipated to only exhibit very small quantities of contamination. Under expected conditions these underground utilities are conservatively anticipated to be below *NCS Exempt Material* criteria.

2.3.3 Subterranean Piping Anticipated Conditions

Under normal conditions, a small amount of *Fissile Material* is expected to have been introduced into the subterranean process piping. Consequently, under normal conditions any ^{235}U that was inadvertently introduced within subterranean process piping is attached to the interior of the piping. This is due to the fact that over 50 years of water running through the subterranean process piping and storm water system would have ensured that any loose ^{235}U would have been flushed out. Based on the 50 years of water running through the subterranean piping and the assumption that loose ^{235}U would have been flushed out of the system the majority of subterranean piping is expected to contain only trace amounts of *Fissile Material*. This assumption is supported by the results of the in-probe radiological surveys and visual inspection that examined over one thousand feet of subterranean piping.

Because the in-probe radiological surveys represent a significantly large sample, and the assayed pipes represent pipes with drains that were in the vicinity of the fuel manufacturing operations, results of the in-pipe radiological surveys are also expected to provide a bounding representation of the ^{235}U activity in all other subterranean piping. Thus, based on the assumed normal condition that the vast majority of subterranean piping will only contain trivial fissile loadings (i.e., < 0.1 g^{235}U/L) dispersed over several thousand liner feet, a large proportion of the subsurface piping system is

anticipated to meet the *NCS Exempt Material* criteria.

2.3.4 Sewage/Septic Treatment Tank(s) and Associated Drain field and Drain Line Anticipated Conditions

Under normal conditions, the current sewage treatment tank is anticipated to contain only small (insignificant) quantities of ^{235}U. This is due to the fact that the subterranean piping connected to the treatment tank originates primarily from the lavatories (i.e., non-fissile material handling locations). Under normal (anticipated) conditions, any *Fissile Material* associated with the treatment tank content will have a low mass/concentration, well below safe subcritical limits, such that, it is considered unlikely to have a ^{235}U average concentration in excess of the *NCS Exempt Material* criteria of 0.1 g^{235}U/L.

Under anticipated conditions the drain line associated with current sewage treatment system is of no concern provided the current treatment tank meets the *NCS Exempt Material* criteria. Therefore, the drain line is anticipated to meet *NCS Exempt Material* criteria even without verification by assay, provided the current sewage treatment tank is demonstrated to meet *NCS Exempt Material* criteria. However, if the current sewage treatment tank is classified as *Non-NCS Exempt Material* then the drain line associated with the *Non-NCS Exempt* subject tank must be excavated in accordance with the subterranean piping removal process and soil exhumation procedures (presented in Sections 1.4.2 and 1.4.3).

Note because the older sewage treatment tank and concrete septic tank have been decommissioned and the material residing within the tanks cannot be interpreted as representative of the associated drain line, the drain field is conservatively anticipated to comprise *Non-NCS Exempt Material* and will be excavated in accordance with the subterranean piping removal process and soil exhumation procedures.

2.3.5 Process Building Components and Auxiliary Buildings Debris Anticipated Conditions.

Under normal conditions process building components and auxiliary building debris decommissioning wastes derived from the Hematite site will comprise low level fixed residual contamination, and are not anticipated to exceed an average concentration of 0.1 g^{235}U/L. This assumption is based on the data presented in Tables 1.7 and 1.8. The conservative values captured in Tables 1.7 and 1.8 are significantly below an average concentration of 0.1 g^{235}U/L, therefore, affording a large margin of safety at the USEI site under normal conditions.

2.3.6 Waste Shipped from the Hematite Site for On-site Treatment at USEI

Under normal conditions, waste shipped from the Hematite site to the USEI site for onsite treatment may be placed in temporary storage, sent to one of the stabilization units, debris handling facilities, or alternatively containerized bulk waste may be stored in one of USEI's RCRA storage areas. The stabilization process, which may involve chemical and/or physical stabilization to remove or

immobilize hazardous contaminants, ultimately reduces the solubility and/or migration of contaminates associated with the waste consigned to a USEI disposal cell.

Stabilization treatments applicable to waste shipped from the Hematite site to the USEI site are as follows:

1. Chemical Stabilization
   - Chemical Stabilization is a proven treatment process that irreversibly bonds target molecules into an environmentally inert material that reduces the leachability of the contaminants of concern. Chemical stabilization uses lime-bearing material such as Portland Cement, kiln dust, or other lime sources. Stabilization results from the chemical reaction of the lime, waste and water (supplied or in the waste). All of these reactions contribute to the reduced leachability of the constituents of concern.

2. Chemical Fixation (Oxidation/Reduction)
   - Chemical fixation involves reagents which, when used in conjunction with stabilization, reduce the leachability of inorganic and organic constituents. Reducing reactions, oxidation reactions, and competing reactions may all occur during the use of these reagents. These processes allow the formation of compounds, which are insoluble or have significantly reduced solubility.

3. Macro-encapsulation
   - Macro-encapsulation is a confining or immobilization process used to treat all types of hazardous debris independent of the hazardous constituents involved. The macro-encapsulation process encases the debris to provide a physical barrier that prevents/minimizes potential leaching of hazardous constituents from the debris.

4. Micro-encapsulation
   - Micro-encapsulation is a confining or immobilization process that requires the stabilization of the debris with the following types of reagents (or waste reagents) such that the leachability of the hazardous contaminants is reduced: (1) Portland cement; or (2) lime/pozzolans (e.g., fly ash and cement kiln dust). Additional reagents (e.g., iron salts, silicates, carbon, polymers or clays) may be used as appropriate.

As stated previously, waste shipped from the Hematite Site to the USEI site must not exceed an average concentration of 0.1 $g^{235}U/L$. This is significantly below the maximum subcritical infinite sea concentration of 4.0 $g^{235}U/L$ for nominal soil (Appendix A). Based on the treatment processes described above, the treated Hematite waste materials will not exceed an average concentration of 0.1 $g^{235}U/L$. Thus, the dilution of waste materials by use of a chemical stabilization agent(s) and/or encapsulation agent will not result in an unanalyzed condition during normal operations.

2.4 ABNORMAL CONDITIONS

Postulated abnormal conditions associated with final waste characterization and burial at the USEI site concern the potential for an increase in ^{235}U mass and/or concentration levels on receipt, or following emplacement within the disposal system.

The following postulated criticality scenarios are discussed and assessed in this section:

- 2.4.1 Concentration Limits are Exceeded when Concrete Debris Prepared for Shipment is Improperly Characterized
- 2.4.2 Concentration Limits are Exceeded when Preparing Underlying Soil for Shipment
- 2.4.3 Concentration Limits are Exceeded when Piping Debris Prepared for Shipment
- 2.4.4 Concentration Limits are Exceeded when Sewage/Septic Treatment Tank(s) and Associated Drain field and Drain Line Packaged for Shipment
- 2.4.5 Concentration Limits are Exceeded when Auxiliary Building Demolition Debris and Components Remaining as a result of Process Building demolition Activities Packaged for Shipment
- 2.4.6 Wrong material is loaded for shipment to the USEI site
- 2.4.7 Migration and Localized Concentration of ^{235}U in USEI Landfill Cells, Leachate System, and/or Evaporation pond

2.4.1 Concentration Limits are Exceeded when Concrete Debris Prepared for Shipment is Improperly Characterized

2.4.1.1 Discussion

To support consignment of concrete surfaces residing at the hematite site for disposal at USEI , an extensive radiological surface survey program (nondestructive surface surveys) was undertaken during 2009 for the purpose of providing radiological data to assist in quantifying the residual mass of ^{235}U associated with concrete surfaces (Reference 9 and 14). The radiological survey was also complemented by concrete coring operations (Reference 22) which were conservatively biased to peak contamination areas occupied by cracks, expansion joints, seams, and *hotspots*.

Results from the cored concrete sample analysis concluded that the majority of the samples exhibited low-enriched uranium (i.e., ≤ 5 wt. % ^{235}U) and samples collected from concrete regions that are not identified as having cracks, expansion joints, seams, or have not been identified as previously resurfaced have the majority of their ^{235}U contamination (> 95%) confined to the upper ¼" surface of the concrete. Furthermore, samples collected from previously scabbled regions exhibited relatively low ^{235}U contamination levels, which further indicates that the scabbling effort previously performed was successful in reducing the amounts of ^{235}U contamination to insignificant levels.

In addition, results from the radiological surface survey concluded the total amount of ^{235}U present

in the floor regions of all Hematite facility buildings is less than 4,600 g^{235}U, and as previously mentioned, the ^{235}U gram quantity was calculated by conservatively ignoring the contribution of the background count rates to the observed gross count rates. Based on the conservatively calculated 4,600 g^{235}U associated with the concrete slabs, and the slabs total surface area of approximately 98,000 ft^2 , this results in an average concentration well below the *NCS Exempt Material* criteria of 0.1 g^{235}U/L.

2.4.1.2 Risk Assessment

Based on the discussion provided above, it is concluded that the following conditions must occur before a criticality accident due to consigning concrete debris from the Hematite site to the USEI site would be possible:

- The data associated the concrete slabs would have to be grossly in error, thus significantly exceeding the *NCS Exempt Material* criteria of 0.1 g^{235}U/L; or
- The concrete slabs would need to include unevaluated material from the underlying surface, such as soil and/ or subterranean piping.

Based on the results of the radiological survey, the total mass of ^{235}U contained within all concrete slabs is less than 4,600 g^{235}U. Moreover, Building 252 exhibited the highest ^{235}U concentration of any area. Assuming all the ^{235}U contamination is confined within the upper ½" and assuming an artificial ½" *cut depth,* the associated debris would be slightly in excess of the *NCS Exempt Material* criteria of 0.1 g^{235}U/L (i.e., 0.171 g^{235}U/L). However, the thickness of concrete* slab associated with Building 252 is substantially greater than ½", implying that the ^{235}U concentration is significantly less than 0.171 g^{235}U/L. Consequently, assuming a conservative 3" thick layer of concrete for build 252, the average ^{235}U concentration is 0.03 g^{235}U/L, which is more than a factor of three below the *NCS Exempt Material* criteria and a factor of forty-six below the minimum critical infinite sea concentration of 1.4 g^{235}U/L for a fictitious bounding medium consisting of only SiO_2 and ^{235}U. Therefore, Building 252 provides a bounding ^{235}U concentration for all other process/auxiliary building surfaces at the Hematite site.

It is anticipated that concrete excavation operations will result in lifting part of the underlying ground region that may be stuck to the lower surface of the concrete slabs. However, it is considered unlikely that ground regions will contain significant quantities of ^{235}U. This is because concrete regions that are free of cracks, expansion joins, and seams would have provided a physical barrier against ^{235}U that was spilled during the manufacturing era from seeping to the underlying ground regions. The only credible contamination pathway to the soil beneath former concrete slabs is from spills of liquid forms of uranium that occurred near seams, expansion joints, and cracks of concrete slabs and seeped through to the underlying regions. Cored-sample analysis of the underlying soil/gravel regions collected from beneath concrete sections that exhibited cracks,

* Thicknesses of the concrete slab regions in the Hematite former process and auxiliary buildings range from 4" to 12".

expansion joints, and seams indicate that the highest ^{235}U concentration in the sampled gravel/soil is 117 mg ^{235}U/L (0.117 g^{235}U/L), which is slightly above the *NCS Exempt Material* criteria of 0.1 g^{235}U/L, but a factor of twelve less than the minimum critical infinite sea concentration of 1.4 g^{235}U/L for a fictitious bounding medium consisting of only SiO_2 and ^{235}U.

The underlying soil/gravel sample with this measured ^{235}U concentration was obtained through a crack from a resurfaced concrete region, which indicates the referenced concrete section was in an area that, historically, was highly contaminated. Hence, it is not expected that the 0.117 g^{235}U/L represents ^{235}U concentration levels in the general underlying ground regions, thus the 0.117 g^{235}U/L does not pose a criticality risk. This expectation is further supported by the cored-sample analysis results, which also indicate that the average observed ^{235}U concentration in all the sampled gravel/soil is 12.7 mg ^{235}U/L ($\leq$ 0.013 g^{235}U/L), which is more than a factor of seven (7) below the *NCS Exempt Material* criteria of 0.1 g^{235}U/L.

Notwithstanding the above, sporadic small-sized pockets of ground regions underlying the concrete slabs are conservatively assumed to exhibit elevated ^{235}U concentration levels that exceed the *NCS Exempt Material* criteria of 0.1 g^{235}U/L. However, it is considered unlikely that these regions will exhibit ^{235}U concentration levels that exceed the *Exempt Material* criteria, and it is also considered unlikely that ground regions attached to concrete debris will contain ^{235}U in significant quantities that would result in a criticality accident following disposal at the USEI site.

Even though the risk of a criticality accident following consignment of unmitigated concrete is judged to be very small (as explained above), Defense-in-Depth (DinD) controls are nonetheless implemented to ensure bounding assumptions for downstream operations remain valid (i.e., all materials transferred to the USEI meet the waste acceptance criteria of 0.1 g^{235}U/L). The controls consist of the following:

- Prior to excavation of concrete slabs, the upper surface of the concrete in areas occupied by former manufacturing facilities and auxiliary buildings that were involved in manufacturing and storage of ^{235}U, should utilize a fixative* to immobilize any entrained ^{235}U contamination.
- Visible quantities of ground material (i.e., soil/gravel) attached to the concrete section removed from floor sections of Hematite facility buildings that were involved with handling liquid forms of uranium (i.e., Building 240 and Building 260) should be handled in accordance with exhumation procedures for suspected contaminated soil, as outlined in Section 2.4.2. Therefore, independent assay of ground material attached to concrete sections excavated from Building 240 and Building 260 should be performed using qualified, calibrated *Fissile Material* detection equipment to ensure that *Non-NCS Exempt Material* is not bulked with the concrete debris.

* Concrete surfaces that have been treated with a fixative do not need to be retreated unless the fixative has been removed or is no longer present.

2.4.1.3 Summary of Risk Assessment

Based on the risk assessment provided in Section 2.4.1.2, concrete excavation operations cannot credibly result in an unsafe condition following consignment to the USEI site because the ^{235}U concentration levels associated with the concrete debris is too low considering its form and relative abundance. However, because the excavated concrete debris will be bulked and transferred to the USEI site, controls are established to prevent exhumation of potentially contaminated underlying ground material with the concrete debris, i.e., to prevent transfer of underlying soil that may potentially exceed the *NCS Exempt Material* criteria of 0.1 $g^{235}U/L$.

2.4.1.4 Criticality Safety Controls

The following procedural requirements (recognized as Defense-in-Depth (DinD) controls) are considered a practicable measure for further reducing criticality risk. It is considered that their implementation will ensure that the risks from criticality are as low as is reasonably achievable.

> **DinD Administrative Control 01:** *The upper surface of the concrete slabs residing in the following former facilities should be ensured to have been coated with a fixative prior to exhumation:*
>
> ⇨ *Building 235*
> ⇨ *Building 240*
> ⇨ *Building 252*
> ⇨ *Building 253*
> ⇨ *Building 254*
> ⇨ *Building 255*
> ⇨ *Building 256*
> ⇨ *Building 260*
>
> **DinD Administrative Control 02:** *Following excavation of concrete debris, the underside of the excavated concrete should be inspected for any attached sub-surface debris (e.g., mounds of soil, embedded piping, etc.). Any identified attached debris should be radiologically surveyed for ^{235}U content, or removed and later radiologically surveyed for ^{235}U content during survey of the surrounding exposed soils. Any identified Non-NCS Exempt debris should be handled and containerized as Non-NCS Exempt Material.*
>
> *Notes*:
> 1. *This CSC only applies to concrete surfaces within the environs of Building 240 and Building 260.*

2.4.2 Concentration Limits are Exceeded when Preparing Underlying Soil for Shipment

2.4.2.1 Discussion

As discussed in Section 2.3.2, soil that is not in the vicinity of subterranean structures and the soil

that is not near concrete slabs* that were used as floors or foundations of the Hematite facility former process and auxiliary buildings are likely not to exceed the *NCS Exempt Material* criteria. In addition, this determination also applies to concrete and asphalt walkways and asphalt haul roads. This is because the soil in these areas would have not been subjected to significant ^{235}U contamination. This is also true for the soil and underlying ground regions beneath slabs associated with manufacturing operations that were restricted to the production and handling of dry forms of ^{235}U. However, the soil surrounding subterranean piping and the soil that is near concrete slabs that were used for fuel manufacturing operations in the former process buildings that employed liquid forms of uranium (i.e., solutions) is conservatively anticipated to exceed *NCS Exempt Material* criteria.

With regard to soil beneath concrete slabs that are free of cracks, expansion joints, and seams and in the vicinity of fuel manufacturing operations in the former process and auxiliary buildings, this assumption is judged to be very conservative based on sample analysis of underlying gravel and soil cored from beneath the former process building concrete slabs, which include samples of soil/gravel cored through concrete slab regions that were determined from the radiological survey to constitute *Hotspots* (References 9 and 14). Results of the sample analysis, presented in Table 1.3, indicate that the highest observed ^{235}U concentration in the sampled gravel/soil is ≤ 30 mg ^{235}U/L (≤ 0.03 g^{235}U/L), which was measured by means of destructive assay that was performed on sample #05. Sample #05 originated from a concrete region that was identified as an area exhibiting high radiological readings during the survey analysis of the concrete slabs, and the sample analysis performed on the top ¼" concrete surface of the sample indicates a relatively high activity of 1,916 mg ^{235}U /L. So despite the fact that the concrete region above the sampled underlying ground material exhibited relatively high levels of ^{235}U contamination, the amount of ^{235}U that seeped into the ground region was sufficiently small, such that the resultant ^{235}U concentration is more than a factor of three (3) below the *NCS Exempt Material* threshold of 0.1 g^{235}U/L for soil. Furthermore, the cored sample analysis of underlying soil/gravel regions indicates that the average ^{235}U concentration observed in the twenty-one cored gravel/soil samples is ≤ 13 mg ^{235}U/L (≤ 0.013 g^{235}U/L), which is more than a factor of seven (7) smaller than the *NCS Exempt Material* threshold. However, cored-sample analysis of the underlying soil/gravel regions collected from beneath concrete sections that exhibited cracks, expansion joints, and seams indicate that the highest ^{235}U concentration in the sampled gravel/soil is 117 mg ^{235}U/L (0.117 g^{235}U/L), which is slightly above the *NCS Exempt Material* criteria of 0.1 g^{235}U/L for soil, but a factor of twelve (12) less than the minimum critical infinite sea concentration of 1.4 g^{235}U/L for a fictitious bounding medium consisting of only SiO_2 and ^{235}U. The underlying soil/gravel sample with this measured ^{235}U concentration was obtained through a crack from a resurfaced concrete region (sample #03B), which indicates the referenced concrete section was subjected to significant contamination levels. Hence, it is not expected that the 0.117 g^{235}U/L represents ^{235}U concentration levels that are characteristic of the general underlying ground regions.

With regard to soil near cracked or breached subterranean piping, the results of the in-pipe probe

* These are non-productive concrete slabs, such as sidewalks and concrete slabs outside former process and auxiliary buildings.

radiological surveys (Reference 23), that encompassed over a thousand feet of subterranean piping, did not reveal excessive dose rate levels in the assayed subterranean pipes. Lack of excessive dose rates in the assayed pipes provides assurance the ^{235}U that may have migrated through cracks of said pipes is not of significant quantities. However, to ensure soil that exceeds the waste acceptance criteria of 0.1 g^{235}U/L is not inadvertently consigned to the USEI site for disposal, the surface of underlying soil beneath the concrete slab regions of the former process buildings that were involved in the handling of liquid forms of uranium (specifically, Building 240 and Building 260) are assayed independently once the overlaying concrete slabs are removed. Surface assay is a very conservative method when used to identify *Non-NCS Exempt Material*. Surface assays of the underlying soil and ground regions beneath non-production use concrete slabs and other surfaces such as pavement/tarmac are not required due to the natural barrier this material provides for migratory contamination. In addition, surface assays of the underlying soil and ground regions beneath former concrete slab buildings that were restricted to dry forms of uranium are not required. This is because there is no credible pathway for dry forms of uranium to seep through the concrete slabs.

Provided an area of soil is found to be contaminated but meets the *NCS Exempt Material* criteria, the soil is carefully exhumed as a layer not exceeding the maximum permitted *cut-depth** as dictated by Reference (24). The exhumed soil is bulked and transferred to an appropriate stockpile in a WHA where it will be aggregated with other low level waste material. In the event that the assay results indicate that the soil to be removed contains an average concentration exceeding 0.1 g^{235}U/L, then the subject solids are designated as *Non-NCS Exempt Material* and subject to a primary evaluation/assay measurement and a secondary independent evaluation/assay measurement, both of which will be independently verified to determine radiological content In order to be shipped to the USEI site for burial, the evaluation/assay results must demonstrate that the material does not contain greater than 0.1 g^{235}U/L. In the event that the material is established to meet the 0.1 g^{235}U/L *NCS Exempt Material* criteria at the Hematite site, the materials will be aggregated with other bulk waste streams. Material meeting the other *NCS Exempt Material* criterion of no more than 15g ^{235}U within an enclosed volume occupying at least 5L† may be aggregated with other bulk waste streams provided that the average concentration of the combined waste materials does not exceed 0.1g ^{235}U/L. Material that exceeds the *NCS Exempt Material* criteria may be commingled with other low level waste and re-evaluated (e.g., in the WEA/MAA) for fissile nuclide content. Provided that the re-evaluation demonstrates that the average concentration of the commingled waste materials does not exceed 0.1 g^{235}U/L then the material may be consigned to the USEI site for disposal, as either individual consignments or aggregated with other bulk waste streams categorized as *NCS Exempt Material*.

For soil regions that overlay subterranean structures but have been determined to not exceed the *NCS Exempt Material* Limit, the soil covering the subterranean structures is carefully exhumed until these

* The maximum thickness of soil that can be adequately characterized by in-situ assay equipment is established in the calibration basis document

† The acceptability of the consignment to the USEI site of material designated as *NCS Exempt Material* based on the criteria of no more than 15 g^{235}U within an enclosed volume occupying at least 5L is specifically addressed in Section 2.4.7.

structures are encountered, at which time, subterranean structures exhumation procedures and processes are then invoked (Reference 24).*

2.4.2.2 Risk Assessment

Based on the discussion provided above, it is concluded that before a criticality accident could occur due to consigning soil with a high ^{235}U concentration to the USEI disposal site, the concentration of ^{235}U associated with the exhumed soil would need to significantly exceed 0.1 g^{235}U/L.

It is important to note that the soil areas that are of particular concern to criticality safety involve portions of soil that are in the vicinity of subterranean piping or soil beneath heavily contaminated concrete slabs associated with fuel manufacturing operations in the former process buildings that handled uranium solutions. The subterranean piping has the potential to contain a crack or breach, which could have allowed solutions laden with *Fissile Material* to seep into surrounding pockets of soil. The heavily contaminated concrete slabs also had the potential to allow seepage of *Fissile Material* to collect within the soil through cracks, expansion joints, or seams adjacent to walls.

The two surface assays of the underlying soil utilize calibrated equipment that is effective for *Fissile Material* identification within soil. The operators that are responsible for the detector's response and function are knowledgeable, skilled and trained to perform the task.

Once the assay results confirm that the soil meets *NCS Exempt Material* criteria, then the soil portions are excavated to a depth justified by the calibration document for the assay equipment and then bulked.

If the assay results do not confirm that the soil meets *NCS Exempt Material* criteria and instead concludes that the soil as *Non-NCS Exempt Material*, then the associated portion of soil portion carefully extracted into a *Field Container* subject to an independent primary assay/evaluation and a second independent assay/evaluation and dispositioned accordingly.

The potential risks in the above procedural requirements which could lead to a condition favorable for criticality due to consigning debris to USEI for disposal include:

- misinterpreting the assay results
- excavating portions of soil that have not been assayed

It is considered unlikely that multiple personnel would inadvertently misinterpret assay results. This is due to the qualification and training required of the operators. If the assay result for a particular soil region were mistakenly interpreted as meeting *NCS Exempt Material* criteria when in fact the soil contained > 0.1 g^{235}U/L, then quantities of *Fissile Material* exceeding 0.1 g^{235}U/L could potentially be bulked and transferred to the USEI disposal site. However, for conditions favorable

* Note that, not only do subterranean excavations of *Non-NCS Exempt Material* require two independent surface assays using calibrated equipment of the subterranean structures, but also of the surrounding soil.

for criticality to exist, the actual ^{235}U concentration in the soil must be at least fourteen times greater than the *NCS Exempt Material* criteria. Moreover, it is unlikely that such concentration will be encounter during the subject operation. Provided the low ^{235}U concentrations exhibited in the soil collected and evaluated from benefit the concrete slabs, and the absences of excessive dose rates record during the in-pipe probe radiological surveys. Therefore, multiple occurrences of misinterpreted assay results would need to be realized before a criticality due to consigning debris to USEI for disposal would be credible.

Training is essential for any nuclear facility decommissioning activity and this excavation activity is treated no differently. The operators are knowledgeable, trained and qualified to perform their assigned tasks, and fully recognize the importance in performing their tasks independently and according to procedure. This, combined with the following, ensures that these controls would be at least unlikely to fail:

- Provision of simple and unambiguous procedures; and
- The very low probability of encountering significant ^{235}U concentrations.

To ensure that the preventative measures established above provide sufficient risk reduction it is necessary to require that the described radiological survey and soil exhumation procedures are independently performed by multiple (i.e., at least two) persons. The control reliability arguments presented above, combined with the use of multiple persons, ensures that this event sequence satisfies the DCP, because two unlikely concurrent failures would be required before a criticality accident could be possible.

2.4.2.3 Summary of Risk Assessment

Based on the discussion provided above, it is concluded that before a criticality accident could occur due to consigning soil residing beneath the concrete slabs at the Hematite site to the USEI disposal site would be possible:

- Subterranean piping must be cracked or breached or soil is located underneath cracked concrete or seams in concrete associated with former uranium solution operations resulting in surrounding soil to contain excessive concentration of ^{235}U;
- Bulking of soil containing *Fissile Material* from a pipe leak or seepage from concrete above; and
- Multiple soil assays inaccurately report *NCS Exempt Material* criteria is met or unassayed soil inadvertently exhumed; or
- Post assay/evaluation inaccurately reports ^{235}U concentrations and/or ^{235}U mass.

2.4.2.4 Safety Controls

The explicit CSCs relied on to provide the criticality safety barriers identified above and thus relied on to preclude waste exceeding the *NCS Exempt Material* criteria from being transferred to the USEI site for disposal are listed below. These controls, coupled with the control reliability arguments presented above, and combined with the use of multiple persons, ensures that this event sequence

satisfies the DCP, because two unlikely concurrent failures would be required before a criticality accident could be possible.

Administrative CSC 01: *Soil in the vicinity of subterranean structures (e.g., subterranean piping, septic tanks, etc.) and underlying soil and ground regions beneath concrete slabs within the environs of Buildings 240 and 260 SHALL be independently assayed to identify Non-NCS Exempt Materials prior to exhumation using independent assay instruments (i.e., physically separate). The material SHALL not exceed the NCS Exempt Criteria prior to treating as NCS Exempt Material for USEI.*

Notes:

1. *Soil in the vicinity of subterranean structures SHALL encompass all regions within 12" of the surface of the affected subterranean structure. Assay of the soil region extending beyond 12" from the surface of the subterranean structure SHALL continue until the soil in the vicinity of the affected subterranean structures is determined to be below the NCS Exempt Material criteria.*
2. *This CSC does not apply to underground utilities such as electrical conduit or gas lines.*

Administrative CSC 02: *Following removal of any identified Non-NCS Exempt Materials from a HDP remediation area, the remaining portion(s) of the radiologically surveyed area may be exhumed and dispositioned as NCS Exempt Material. However, the material excavation depth SHALL NOT exceed the maximum permitted cut depth established in the radiological survey equipment calibration basis.*

Notes:

1. *Exceeding the maximum permitted cut depth is an anticipated process upset due to the potential difficulty in performing precise depth excavations. More than three sequential instances of failing to adhere to the maximum permitted cut depth in an excavation area would not present any credible criticality safety concerns, and is credited as an unlikely condition. Consequently, more than three sequential instances of failing to adhere to the maximum permitted cut depth constitutes a violation of this CSC.*

Administrative CSC 03: *All reasonably practicable measures SHALL be taken to minimize the potential to exhume a layer of soil debris exceeding the maximum permitted cut depth. Consideration should be given to:*

- *Controlling the excavation depth to a value smaller than the maximum permitted cut depth to provide margin;*

- *Employing excavation techniques and equipment that allow for an optimally controlled depth excavation; and*
- *Use of markers or other tools to provide indication when exceeding the maximum permitted cut depth.*

DinD Administrative Control 03: *In the event of removal of a layer of material exceeding the maximum permitted cut depth, the exhumed material should be deposited in the excavation area and re-evaluated (i.e., re-inspected/re-surveyed according to the fissile content screening and waste exhumation procedures).*

Administrative CSC 04: *Waste consigned to the USEI site for disposal SHALL not exceed an average concentration of 0.1 g^{235}U/L.*

Note:

1. *In addition to waste that directly meets the fissile nuclide concentration not exceeding 0.1 g^{235}U/L criteria, waste with a fissile nuclide mass content not exceeding 15 g^{235}U and occupying a container with a volume of at least 5 liters is also determined to meet the maximum average concentration of 0.1 g^{235}U/L allowed for shipment to USEI on the basis that the credible combined volume of such waste is small compared to the volume of the bulk waste satisfying the 0.1 g^{235}U/L criteria.*

Administrative CSC 05: *Administrative CSCs NSA-TR-HDP-11-11 CSC 01, 02, and 03 SHALL be independently followed/observed for adherence to procedure by at least one qualified individual.*

In support of the above Administrative CSCs, equipment used for in-situ radiological surveys are designated as Safety Related Equipment, the Safety Functional Requirement being to measure gamma radiation emission from ^{235}U nuclides, which will permit estimation of ^{235}U content when properly calibrated and used in accordance with applicable procedures.

Safety Related Equipment 01: *Radiological survey instruments used for in-situ or non-assay, field waste characterization SHALL be capable (when used in support of a CSC) of measuring ^{235}U content when used in conjunction with an approved calibration basis.*

Safety Related Equipment 02: *Assay and analytical equipment used to establish the ^{235}U content of waste material (when being used for the purpose of criticality control) SHALL be capable of appropriately accounting for ^{235}U content with approved calibration appropriately accounting for material properties (material shape, density etc.).*

Administrative CSC 06: *Radiological surveys performed in support of CSCs SHALL use only equipment that is approved and appropriately calibrated to satisfy the NCS Performance Requirement of accounting for potential under-reading due to the effect of credible variation in uranium distribution, particle size and attenuation of the photon intensity within the media.*

2.4.3 Concentration Limits are Exceeded when Piping Debris Prepared for Shipment is Improperly Characterized.

2.4.3.1 Discussion

As discussed previously, in-pipe probe measurements and visual surveys were conducted on over 1,600 linear feet of subterranean piping. Results of these in-pipe probe measurements, documented in Reference 23, concluded that only four individual segments totaling approximately 190' exhibited readings in excess of the measured radiological background level. Because the assayed pipe length represents a significantly large sample, and the assayed pipes represent pipes with drains that were in the vicinity of fuel manufacturing operations, results of the in-pipe radiological surveys are deemed to be a bounding representation of the ^{235}U activity in all other subterranean piping. Furthermore, it is expected that any ^{235}U that may be contained within subterranean piping is attached to the interior of piping structure. This is due to the fact that over 50 years of water running through the subterranean process piping and storm water system would have ensured that any loose ^{235}U would have been flushed out. Therefore, based on the in-pipe probe measurements, the majority of subterranean piping is expected to contain only trace amounts of *Fissile Material*.

There are two methods for excavating piping. The subterranean pipe section can be removed either intact or crushed in place. The decision to extract the pipe section intact or as crushed debris relies in part on the encountered condition of the pipe section prior to exhumation. That is, although excavation operations entail careful removal of soil that surrounds the subterranean piping, it is expected that these operations will cause certain sections of the subterranean piping to be crushed (e.g., vitrified clay pipes are expected to be easily crushed due to excavation operations). In either case, the piping debris and/or pipe segment will be verified by two independent measurements in order to ensure the exhumed material does not exceed the *NCS Exempt Material* criteria.

Provided the subterranean piping is crushed, the overlaying soil debris can then be removed using the soil exhumation procedures and processes, as described in Section 1.4.2 and evaluated in Section 2.4.2. If the excavation operations resulted in maintaining the integrity of the pipe, the two independent surface surveys performed of the piping are performed in-situ or on the segmented portion lifted from the ground in order to discern if the subject pipe comprises *NCS Exempt Material* or *Non-NCS Exempt Material.*

Provided that the surface assay establishes that the piping debris meets *NCS Exempt Material* criteria, the material exhumed may be transferred to an appropriate stockpile in a WHA. In the event that the assay results indicate that the piping debris to be removed contain an average concentration exceeding 0.1 g^{235}U/L, then the subject piping debris is designated as *Non-NCS Exempt Material* and subject to a primary evaluation/assay measurement and a secondary independent evaluation/assay measurement, both of which will be independently verified to determine radiological content In order to be shipped to the USEI site for burial, the evaluation/assay results must demonstrate that the piping debris does not contain greater than 0.1 g^{235}U/L. In the event that the piping debris is established to meet the 0.1 g^{235}U/L *NCS Exempt Material* criteria at the Hematite site, the materials will be aggregated with other bulk waste streams.

Material meeting the other *NCS Exempt Material* criterion of no more than 15g ^{235}U within an enclosed volume occupying at least 5L* may be aggregated with other bulk waste streams provided that the average concentration of the combined waste materials does not exceed 0.1g ^{235}U/L. Material that exceeds the *NCS Exempt Material* criteria may be commingled with other low level waste and re-evaluated (e.g., in the WEA/MAA) for fissile nuclide content. Provided that the re-evaluation demonstrates that the average concentration of the commingled waste materials does not exceed 0.1 g^{235}U/L then the material may be consigned to the USEI site for disposal, as either individual consignments or aggregated with other bulk waste streams categorized as *NCS Exempt Material*.

2.4.3.2 Risk Assessment

Based on the discussion provided above, it is concluded that the following conditions must occur before a criticality accident due to consigning piping debris from the Hematite site to the USEI site would be possible:

- The ^{235}U associated with the subterranean pipe sections or piping debris would have to exceed the applicable *NCS Exempt Material* criteria; or
- The ^{235}U associated with the subterranean piping debris and comingled soil would have to exceed the applicable *NCS Exempt Material* criteria;

Results of the in-pipe probe measurements concluded that all but four individual segments totaling ~ 190' exhibited reading in excess of the measured radiological background level. Because the assayed pipe length represents a significantly large sample, and the assayed pipes represent pipes with drains that were in the vicinity of the fuel manufacturing operations, results of the in-pipe radiological surveys are also expected to bound the ^{235}U activity in all other subterranean piping.

Furthermore, the fact that over 50 years of water running through the subterranean process piping and storm water system would have ensured that any loose ^{235}U would have been flushed out and as such, ^{235}U that remains in these subterranean piping is essentially fixed in place. Therefore, bulking operations would not be expected to result in any significant release of ^{235}U from the subterranean piping.

It is likely that pipe excavation operations will result in mixing the crushed piping debris with portions of the underlying soil debris. However, it is considered unlikely that surrounding soil debris will contain ^{235}U in significant concentrations. This is because the majority of the subterranean piping is expected to have little to no ^{235}U holdup additionally being free of cracks, thus providing an effective barrier between potentially contaminated water flowing through the pipes and the surrounding soil.

---

* The acceptability of the consignment to the USEI site of material designated as *NCS Exempt Material* based on the criteria of no more than 15 g^{235}U within an enclosed volume occupying at least 5L is specifically addressed in Section 2.4.7.

The credible NCS risks associated with consigning subterranean pipe to USEI are as follows:

- Significant deposits of *Fissile Material* not identified within subterranean piping; and
- Crushing of pipe sections in-situ results in the generation of crushed piping debris with an unidentified significant fissile mass/concentration.

It is important to ensure accurate pipe assays are completed prior to bulking subterranean piping for consignment at USEI for disposal. Therefore, independent personnel are responsible for proper calibration, procedural use, and interpretation of the results regarding pipe assay equipment. Training is essential for any nuclear facility decommissioning activity and this excavation activity is treated no differently. The operators are knowledgeable, trained and qualified to perform their assigned tasks, and fully recognize the importance in performing their tasks independently and according to procedure. In addition, recall that intact pipe shall be determined to meet the *NCS Exempt Material* criteria before being bulked for off-site transfer to the USEI site for disposal. The low *NCS Exempt Material* criteria provides a margin of error greater than fourteen before a minimum critical infinite sea concentration of 1.4 $g^{235}U/L$ (39.6 $g^{235}U/ft^3$) for a fictitious bounding medium consisting of only SiO_2 and ^{235}U can be realized. The discussion presented above ensures that results interpreted by the pipe assay results are not likely to in error by a factor of fourteen, particularly since multiple personnel are responsible for the effectiveness of the assay.

Furthermore, the in-pipe measurements that have already been performed reported that only four individual segments totaling approximately 190' exhibited readings in excess of the measured radiological background level. This representative sample of piping indicates that, on the average, the minimum critical infinite sea concentration of 1.4 $g^{235}U/L$ (39.6 $g^{235}U/ft^3$) for a fictitious bounding medium consisting of only SiO_2 and ^{235}U cannot be realized.

Excavated intact pipe sections are bulked once each pipe section is confirmed to meet *NCS Exempt Material* criteria. The bulking process is approved after this confirmation, which is determined using the existing in-pipe probe measurement results coupled with using dual independent supplemental surface assays of the pipe sections once exposed and/or extracted. For pipe sections that are classified as *NCS Exempt Material*, it is considered to be unlikely for the released fissile material to be bulked into a configuration leading to a condition where the minimum critical infinite sea concentration of 1.4 $g^{235}U/L$ (39.6 $g^{235}U/ft^3$) for a fictitious bounding medium consisting of only SiO_2 and ^{235}U could be realized. This is due to the fact that over 50 years of water running through the subterranean process piping and storm water system would have ensured that any loose ^{235}U would have been flushed out and as such, ^{235}U that remained in the subterranean piping is essentially fixed in place. Furthermore, excavation operations would not be expected to result in any significant fixed ^{235}U becoming dislodged from the subterranean piping. In order for bulked piping classified as

NCS Exempt Material to pose a criticality safety concern, large* (i.e., kilograms) quantities of *Fissile Material* must be mobilized. This potential is extremely small, especially given the low ^{235}U *NCS Exempt Material* average concentration criteria and inefficient conditions, moreover, the results of the in-pipe radiological surveys performed on over 1,600' of subterranean piping indicate that only four individual segments totaling ~ 190' exhibited readings in excess of the measured radiological background level. Because the assayed pipe length represents a significantly large sample, and the assayed pipes represent pipes with drains that were in the vicinity of the fuel manufacturing operations, results of the in-pipe radiological surveys are also expected to bound the ^{235}U activity in all other subterranean piping.

Crushed piping debris is exhumed identically as if it were soil, as described in Section 1.4.2 and evaluated in Section 2.4.2. Refer to Section 2.4.2 for details of these excavation and packaging requirements.

Based on the arguments provided above, it is considered unlikely that piping debris could result in a criticality accident as a result of consignment to USEI for disposal. Specifically, due to the dual independent supplemental surface assays must be inaccurate or the assay result interpreted incorrectly such that a factor of fourteen above the *NCS Exempt Material* threshold (i.e., 1.4 $g^{235}U/L$) would be realized (error factor of 14).

During crushing of pipe sections, it is likely that surrounding soil will be added to the mixture of pipe fragments and residues within the pipe. To ensure that no material is bulked without confirmation that the material meets *NCS Exempt Material* criteria, two independent scans with assay equipment are performed on the crushed debris prior to bulking. This is performed by two different operators using two different assay devices. By imposing this stringent approach on crushed piping debris, it is considered at least unlikely that crushed pipe debris not meeting the *NCS Exempt Material* criteria will be inadvertently bulked and transferred to the USEI site for disposal. The process for exhuming crushed piping debris is the same method used for exhumation of underlying soil in Section 2.4.2, which entails lifting debris no greater than the permitted *cut depth* dictated by the assay equipment calibration basis document.

If the assay results do not establish that the piping debris meets *NCS Exempt Material* criteria then the associated debris portion is carefully extracted and treated in accordance with Section 2.4.2.

* The minimum critical mass in a plutonium system moderated by fully water saturated soil (40% soil-in-water) (Fig III.A.6(97)-4 of Ref. 7) is a factor of ~2.5 greater than the minimum critical mass for an otherwise equivalent aqueous system (Fig III.A.6-1 of Ref. 7). Although this ratio is derived for plutonium, the derived factor of ~2.5 can be applied to a uranium system because the fission cross-section for 235U (as a function of the incident neutron energy) follows a similar trend to the fission cross-section for plutonium. Note that the soil composition for the above data is defined in Table III.A.1-6 of Ref. 7.

2.4.3.3 Summary of Risk Assessment

Based on the discussion provided above, it is concluded that before a criticality accident could occur due to consigning piping debris residing at the Hematite site to the USEI disposal site the following must occur:

- Subterranean piping must contain a *Fissile nuclide* concentration significantly above the *NCS Exempt Material* criteria; and
- Multiple intact pipe sections must be incorrectly characterized for ^{235}U concentration by multiple personnel.
- Subterranean crushed piping debris must be significantly above the *NCS Exempt Material* criteria; and
- Multiple personnel would need to incorrectly calibrate, misinterpret, or otherwise improperly perform surface assay procedure multiple times with two sets of assay devices prior to bulking crushed debris.
- Multiple soil assays inaccurately report the *NCS Exempt Material* criteria is met; and
- Post assay/evaluation inaccurately reports ^{235}U concentrations and/or ^{235}U mass.

2.4.3.4 Criticality Safety controls

The explicit CSCs relied on to provide the criticality safety barriers identified above and thus relied on to preclude waste exceeding the *NCS Exempt Material* criteria from being transferred to the USEI site for disposal are listed below. These controls, coupled with the control reliability arguments presented above, and combined with the use of multiple persons, ensures that this event sequence satisfies the DCP, because two unlikely concurrent failures would be required before a criticality accident could be possible.

Administrative CSC 07: *All subterranean piping sections SHALL be exposed prior to excavation by removing the overlying soil.*

Administrative CSC 08: *All subterranean piping (i.e., intact and crushed subterranean piping) SHALL be independently assayed to identify Non-NCS Exempt Materials prior to exhumation using independent assay instruments (i.e., physically separate). The material SHALL not exceed the NCS Exempt Criteria prior to treating as NCS Exempt Material for USEI.*

Notes:

1. *In lieu of two external independent surface measurements, internal in-situ radiological surveys of the subterranean piping coupled with visual data may be used, provided this method is evaluated and documented in a NCSA.*
2. *This CSC does not apply to underground utilities such as electrical conduit or gas lines*

Administrative CSC 09: *Following extraction of subterranean piping sections, the soil in the vicinity of subterranean piping SHALL be independently assayed to identify Non-NCS Exempt Materials using independent assay instruments (i.e., physically separate). The average ^{235}U concentration of the soil debris SHALL be demonstrated to not exceed 0.1g ^{235}U/L prior to treating as NCS Exempt Material for USEI.*

Notes:

1. *This CSC does not apply to underground utilities such as electrical conduit or gas lines.*

Administrative CSC 02: *Following removal of any identified Non-NCS Exempt Materials from a HDP remediation area, the remaining portion(s) of the radiologically surveyed area may be exhumed and dispositioned as NCS Exempt Material. However, the material excavation depth SHALL NOT exceed the maximum permitted cut depth established in the radiological survey equipment calibration basis.*

Notes:

1. *Exceeding the maximum permitted cut depth is an anticipated process upset due to the potential difficulty in performing precise depth excavations. More than three sequential instances of failing to adhere to the maximum permitted cut depth in an excavation area would not present any credible criticality safety concerns, and is credited as an unlikely condition. Consequently, more than three sequential instances of failing to adhere to the maximum permitted cut depth constitutes a violation of this CSC.*

Administrative CSC 03: *All reasonably practicable measures SHALL be taken to minimize the potential to exhume a layer of soil debris exceeding the maximum permitted cut depth. Consideration should be given to:*

- *Controlling the excavation depth to a value smaller than the maximum permitted cut depth to provide margin;*
- *Employing excavation techniques and equipment that allow for an optimally controlled depth excavation; and*
- *Use of markers or other tools to provide indication when exceeding the maximum permitted cut depth.*

DinD Administrative Control 03: *In the event of removal of a layer of material exceeding the maximum permitted cut depth, the exhumed material should be deposited in the excavation area and re-evaluated (i.e., re-inspected/re-surveyed according to the fissile content screening and waste exhumation procedures).*

Administrative CSC 04: *Waste consigned to the USEI site for disposal SHALL not exceed an average concentration of 0.1 g^{235}U/L.*

Note:

1. *In addition to waste that directly meets the fissile nuclide concentration not exceeding 0.1 g^{235}U/L criteria, waste with a fissile nuclide mass content not exceeding 15 g^{235}U and occupying a container with a volume of at least 5 liters is also determined to meet the maximum average concentration of 0.1 g^{235}U/L allowed for shipment to USEI on the basis that the credible combined volume of such waste is small compared to the volume of the bulk waste satisfying the 0.1 g^{235}U/L criteria.*

Administrative CSC 10: *Administrative CSCs NSA-TR-HDP-11-11 CSC 02, and 03 SHALL be independently followed/observed for adherence to procedure by at least one qualified individual.*

Notes:

1. *NSA-TR-HDP-11-11 CSC 08 is not required to be independently followed/observed since the set point established in HDP work procedures to comply with CSC 08 is common to both surveys.*

In support of the above Administrative CSCs, equipment used for in-situ radiological surveys are designated as Safety Related Equipment, the Safety Functional Requirement being to measure gamma radiation emission from ^{235}U nuclides, which will permit estimation of ^{235}U content when properly calibrated and used in accordance with applicable procedures.

Safety Related Equipment 01: *Radiological survey instruments used for in-situ or non-assay, field waste characterization SHALL be capable (when used in support of a CSC) of measuring ^{235}U content when used in conjunction with an approved calibration basis.*

Safety Related Equipment 02: *Assay and analytical equipment used to establish the ^{235}U content of waste material (when being used for the purpose of criticality control) SHALL be capable of appropriately accounting for ^{235}U content with approved calibration appropriately accounting for material properties (material shape, density etc.).*

Administrative CSC 06: *Radiological surveys performed in support of CSCs SHALL use only equipment that is approved and appropriately calibrated to satisfy the NCS Performance Requirement of accounting for potential under-reading due to the effect of credible variation in uranium distribution, particle size and attenuation of the photon intensity within the surrounding media.*

2.4.4 Concentration Limits are Exceeded when Sewage/Septic Treatment Tank(s) and Associated Drain field and Drain Line Packaged for Shipment are Improperly Characterized.

2.4.4.1 Discussion

As discussed in Section 1.4.4, the Hematite site contains two sewage treatment systems and a concrete septic tank, all of which were connected to the lavatories within the former process buildings. Note that only a single sewage treatment system and the associated sanitation lines and drain lines remain in service. The older sewage treatment tank and concrete septic tank were previously abandoned in place, filled with gravel, and are embedded in the ground near the current sewage treatment tank. The two decommissioned systems' tanks filtered into a common sand and gravel drain field, i.e., separate from the drain line used for the sewage treatment system currently in use.

The two sewage treatment systems and the concrete septic tank are not anticipated to contain significant quantities of *Fissile Material* since the vast majority of their content stems from lavatories. However, because the sewage treatment systems and the concrete septic tank were connected to the laboratory sinks and industrial washing machine drain lines used during fuel manufacturing operations, the subject tanks may be contaminated.

The remediation of the two sewage treatment systems and the concrete septic tank content is performed identically to that for soil remediation. Specifically, the contents are independently assayed with confirmation of results by multiple personnel. If the results satisfy *NCS Exempt Material* criteria, the contents are exhumed to a *cut depth* consistent with the calibration basis of the assay equipment, which in turn is based, in part, on the material composition of the two sewage treatment systems and the concrete septic tank contents. Provided that the surface assay establishes that the subject tank debris meets *NCS Exempt Material* criteria, the material exhumed may be transferred to an appropriate stockpile in a WHA. However, if a portion of the debris is determined to exceed *NCS Exempt Material* criteria, then the associated portion is removed and packaged *Non-NCS Exempt Material* and subject to primary a evaluation/assay measurement and a secondary independent evaluation/assay measurement.

In the event that assay results indicate that the treatment systems or the concrete septic tank components to be removed contain an average concentration exceeding 0.1 $g^{235}U/L$, then the subject solids are designated as *Non-NCS Exempt Material* and subject to a primary evaluation/assay measurement and a secondary independent evaluation/assay measurement, both of which will be independently verified to determine radiological content In order to be shipped to the USEI site for burial, the evaluation/assay results must demonstrate that the treatment systems or the concrete septic tank components do not contain greater than 0.1 $g^{235}U/L$. In the event that the treatment systems or the concrete septic tank components are established to meet the 0.1 $g^{235}U/L$ *NCS Exempt Material* criteria at the Hematite site, the materials will be aggregated with other bulk waste streams. Material meeting the other *NCS Exempt Material* criterion of no more than 15g ^{235}U within an

enclosed volume occupying at least 5L* may be aggregated with other bulk waste streams provided that the average concentration of the combined waste materials does not exceed 0.1g ^{235}U/L. Material that exceeds the *NCS Exempt Material* criteria may be commingled with other low level waste and re-evaluated (e.g., in the WEA/MAA) for fissile nuclide content. Provided that the re-evaluation demonstrates that the average concentration of the commingled waste materials does not exceed 0.1 g^{235}U/L then the material may be consigned to the USEI site for disposal, as either individual consignments or aggregated with other bulk waste streams categorized as *NCS Exempt Material*.

Once the current sewage treatment tank is completely emptied and the entire contents have been exhumed meeting the *NCS Exempt Material* criteria, then the current sewage treatment tank structure and the associated drain line may be excavated without NCS controls. Otherwise, if the contents of the current sewage treatment tank are determined to contain any *Non-NCS Exempt Material*, then exhumation of the associated drain line and the sewage treatment tank structure is not permitted without further evaluation and instruction from the NCS Organization.

However, this approach cannot be used for the decommissioned sewage treatment tank or concrete septic tank. Based on the premise that both of the aforementioned treatment tanks have been decommissioned, the material residing within the treatment tanks cannot be interpreted as representative of the material in the associated common drain field (i.e., filled with gravel). Thus, the drain field and tank structures associated with the previous sewage treatment tank and concrete septic tank is not permitted without further evaluation and instruction from the NCS Organization.

It is noted that the soil above a drain field or drain line is not considered part of the drain field or drain line in this NCSA. Exhumation of this top soil may be performed without implementing any CSCs irrespective of the conditions encountered in the sewage treatment tanks, however, once evidence of the drain line associated with the current sewage treatment system is encountered the soil exhumation procedure and subsurface piping procedures are evoked. The tubing of the drain line and soil/gravel/sand/rock below is considered part of the drain line and must not be exhumed without further evaluation and instruction from the NCS Organization if any portion of the connected current sewage treatment system contents is established to not meet *NCS Exempt Material* classification.

2.4.4.2 Risk Assessment

The risks associated with exhumation of sewage treatment tanks and septic tank content is bounded by the risks associated with soil debris excavation and packaging evaluated in Section 2.4.2. In addition, there is no credible criticality risk associated with exhumation of the current sewage treatment tank structure or the connected drain line as long as the complete sewage treatment contents are established to meet *NCS Exempt Material* criteria.

---

* The acceptability of the consignment to the USEI site of material designated as *NCS Exempt Material* based on the criteria of no more than 15 g^{235}U within an enclosed volume occupying at least 5L is specifically addressed in Section 2.4.7.

2.4.4.3 Summary of Risk Assessment

The risks associated with exhumation of sewage treatment tank content are bounded by the risks associated with soil debris excavation and packaging in Section 2.4.2.

2.4.4.4 Safety Controls

Many of CSCs associated with exhumation of sewage treatment tanks and concrete septic tank content are identical to the CSCs established for soil debris excavation and packaging operations in Section 2.4.2.4, except that the CSC emphasis is on sewage treatment tanks and septic tank content rather than soil. These CSCs are repeated below but with emphasis on sewage treatment tanks and septic tank content material. These controls, coupled with the control reliability arguments presented in this document, and combined with the use of multiple persons, ensure that this event sequence satisfies the DCP, because two unlikely concurrent failures would be required before a criticality accident could be possible.

Administrative CSC 11: *The septic tank and sewage treatment tanks and their material content SHALL be independently assayed to identify Non-NCS Exempt Materials prior to exhumation using independent assay instruments (i.e., physically separate). The material SHALL to not exceed the NCS Exempt Criteria prior to treating as NCS Exempt Material for USEI.*

Notes: The exhumation of the associated drain field, drain line, and the septic tank and sewage treatment tank structure is not permitted and SHALL not occur without approval from the NCS Organization.

Administrative CSC 02: *Following removal of any identified Non-NCS Exempt Materials from a HDP remediation area, the remaining portion(s) of the radiologically surveyed area may be exhumed and dispositioned as NCS Exempt Material. However, the material excavation depth SHALL NOT exceed the maximum permitted cut depth established in the radiological survey equipment calibration basis.*

Notes:

1. *Exceeding the maximum permitted cut depth is an anticipated process upset due to the potential difficulty in performing precise depth excavations. More than three sequential instances of failing to adhere to the maximum permitted cut depth in an excavation area would not present any credible criticality safety concerns, and is credited as an unlikely condition. Consequently, more than three sequential instances of failing to adhere to the maximum permitted cut depth constitutes a violation of this CSC.*

Administrative CSC 03: *All reasonably practicable measures SHALL be taken to minimize the potential to exhume a layer of debris exceeding the maximum permitted cut depth. Consideration should be given to:*

- *Controlling the excavation depth to a value smaller than the maximum permitted cut depth to provide margin;*
- *Employing excavation techniques and equipment that allow for an optimally controlled depth excavation; and*
- *Use of markers or other tools to provide indication when exceeding the maximum permitted cut depth.*

DinD Administrative Control 03: *In the event of removal of a layer of material exceeding the maximum permitted cut depth, the exhumed material should be deposited in the excavation area and re-evaluated (i.e., re-inspected/re-surveyed according to the fissile content screening and waste exhumation procedures).*

Administrative CSC 04: *Waste consigned to the USEI site for disposal SHALL not exceed an average concentration of 0.1 g^{235}U/L.*

Note:

1. *In addition to waste that directly meets the fissile nuclide concentration not exceeding 0.1 g^{235}U/L criteria, waste with a fissile nuclide mass content not exceeding 15 g^{235}U and occupying a container with a volume of at least 5 liters is also determined to meet the maximum average concentration of 0.1 g^{235}U/L allowed for shipment to USEI on the basis that the credible combined volume of such waste is small compared to the volume of the bulk waste satisfying the 0.1 g^{235}U/L criteria.*

Administrative CSC 12 *Administrative CSCs NSA-TR-HDP-11-11 CSC 02 and 03 SHALL be independently followed/observed for adherence to procedure by at least one qualified individual.*

Notes:

1. *NSA-TR-HDP-11-11 CSC 11 is not required to be independently followed/observed since the set point established in HDP work procedures to comply with CSC 11 is common to both surveys.*

In support of the above Administrative CSCs, equipment used for in-situ radiological surveys are designated as Safety Related Equipment, the Safety Functional Requirement being to measure gamma radiation emission from ^{235}U nuclides, which will permit estimation of ^{235}U content when properly calibrated and used in accordance with applicable procedures.

Safety Related Equipment 01: *Radiological survey instruments used for in-situ or non-assay, field waste characterization SHALL be capable (when*

used in support of a CSC) of measuring ^{235}U content when used in conjunction with an approved calibration basis.

Safety Related Equipment 02: *Assay and analytical equipment used to establish the ^{235}U content of waste material (when being used for the purpose of criticality control) SHALL be capable of appropriately accounting for ^{235}U content with approved calibration appropriately accounting for material properties (material shape, density etc.).*

Administrative CSC 06: *Radiological surveys performed in support of CSCs SHALL use only equipment that is approved and appropriately calibrated to satisfy the NCS Performance Requirement of accounting for potential under-reading due to the effect of credible variation in uranium distribution, particle size and attenuation of the photon intensity within the media.*

2.4.5 Concentration Limits are Exceeded when Auxiliary Building Demolition Debris and Components Remaining as a result of Process Building demolition Activities Packaged for Shipment are Improperly Characterized

2.4.5.1 Discussion

Waste shipped from the Hematite site to the USEI site must not exceed an average concentration of 0.1 g^{235}U/L. This concentration limit is below the concentration limit for transportation and is substantially below (by a factor of 14) the minimum critical infinite sea concentration of 1.4 g^{235}U/L for a fictitious bounding medium consisting of only SiO_2 and ^{235}U (Reference 5). This upset scenario involves shipping auxiliary building demolition debris and select components remaining as a result of process building demolition activities with a high ^{235}U concentration (i.e., a concentration exceeding 0.1 g^{235}U/L) to the USEI site.

The auxiliary building demolition debris consists of the remnants of the Hematite site non-production building illustrated in Figure 1.4, and listed in section (1.4.6). The Auxiliary buildings remaining at the Hematite site encompass Buildings 235, 115, and the SWTP shed, all of which may be subject to demolition upon cessation of their use.

Building 235 was used for storage during plant operations, and is currently empty. Building 115 was known as the Fire Pump House and comprised a generator and a fire pump, which has since been removed. The building was built in 1992 and housed a diesel-powered generator and fire water pump, and has no history of radioactive material use. As previously mentioned, Buildings 115 and 235 may be used as functional areas for facilitating future decommissioning operations. Furthermore, operations conducted in these building may involve introduction of contaminated material that will be contained within approved containers (e.g., 55 gallon drums), in addition, the operations will be conducted using a controlled process. However, prior to demolition of Buildings 115 and 235, any contaminated materials will be removed.

No decontamination operations are planned within the Hematite site Buildings 235 and 115 prior to their demolition, other than the removal of any contained contaminated materials as described, provided reanalysis of the structures do not exceed the waste acceptance criteria for disposal at the USEI site.

The SWTP shed historically received discharge from multiple site structures during operation of the facility. The SWTP received water from sinks, toilets, showers and drinking fountains. The SWTP was also used to receive laundry water (after the water was filtered and held for sampling) and waste water from the former process water demineralizer system and laboratory sinks. The SWTP shed consists of a series of settling and aeration tanks and an adjacent building that contains data logging and electronic instrumentation, floor drains and an open work area. The portions of this system that have been impacted by licensed activities are limited to the process components in contact with waste water that have the potential to collect solids that settle from the suspension. Prior to demolition of the SWTP shed, the equipment described above will be removed and separately dispositioned.

As a part of the 2009 site buildings radiological characterization program, surveys were performed to provide radiological data to assist in quantifying the residual mass of ^{235}U associated with the surfaces of Buildings 235, 115, and the Sanitary Waste Water Treatment Plant, including the floors, walls, and ceilings. The radiological survey results are presented in section 1.4.5 and are evaluated against the waste acceptance criteria for the USEI site in the forthcoming Section (2.4.5.2).

The comprehensive radiological survey program that was undertaken during 2009 encompassed the components remaining at the Hematite site as a result of building demolition. The comprehensive radiological survey quantified the ^{235}U associated with a select number of items, based on the result of the radiological survey select components were subject to decontamination activates in order to ensure they meet the relevant criteria for transportation and off-site disposal. A select number of components listed in Table 1.7 of Section 1.4.5 have been evaluated and determined, based on the calculated ^{235}U mass, to meet the criteria for consignment to the USEI site for disposal. The list in Section 1.4.5 compares the calculated pCi/g of the select component to the relevant waste acceptance criteria for the USEI site. The components shipped offsite for consignment to USEI for disposal will be verified against the list in Section 1.4.5 to insure only those components listed in Table 1.8 are shipped to the USEI site.

2.4.5.2 Risk Assessment

The following conditions must occur before a criticality accident due to consignment of auxiliary building demolition debris and components remaining as a result of process building demolition activities from the Hematite site to the USEI site would be possible:

- The residual ^{235}U contamination associated with the auxiliary building debris would need to be significantly increased as a result of use during D&D operations.
- Contaminated material introduced into the auxiliary building is not removed prior to demolition.
- Failure to remove equipment associated with the SWTP described in the above section.

- Components remaining as a result of process building demolition activities other than those listed in Table 1.7 are consigned to USEI for disposal.

Auxiliary Buildings

The auxiliary buildings wall/ceiling and floors areal density estimates were derived using a surface planar source. This model is appropriate for the building walls/ceilings and floors due to their orientation and thus low potential for migration of surface contamination to the underlying bulk. Based on the surface planar source model, the auxiliary building walls/ceilings and floors have an area-averaged areal density of only 0.063 $g^{235}U/ft^2$. This value is based on the highest average value reported for all auxiliary Buildings (Building 235 floors) listed in Table 1.8. Even assuming the highest average areal density value reported for all auxiliary buildings and conservatively assuming a concrete thickness of ½ inch* the average concentration results 0.05 $g^{235}U/L$, a factor of two less than the waste acceptance criteria for consignment to USEI for disposal.

During D&D operations Buildings 115 and 235 may serve as functional areas in order to facilitate future decommissioning operations, and may involve the introduction of contaminated material. Therefore more erroneous conditions could potentially be realized than accounted for in Table 1.8. In order to prevent this potential, the procedural requirements dictate only approved containers comprising contaminated material will be introduced into the functional areas, in addition, require activities to commence under controlled operations. Prior to demolition of buildings 115 and 235, and as indicated in the previous subsection, all contaminated materials will be removed prior to demolition of the auxiliary buildings.

The peak observed wall hotspot area for the SWTP shed has an areal density of only 0.003 $g^{235}U/ft^2$ (Reference 14), which corresponds to a minimum wall thickness limit of just 0.013 in (0.032 cm), assuming an unrealistic 100% compaction of wall structural debris. This minimum wall thickness value is below the actual average wall thickness for the SWTP shed. Hence the structural debris resulting from wall demolition will be below the 0.1 $g^{235}U/L$ limit. In fact, because most walls have substantially greater thickness than the limiting values noted above, the structural debris resulting from wall demolition will exhibit a very low ^{235}U concentration relative to the USEI limit. However, the SWTP shed consists of a series of settling and aeration tanks and an adjacent building that contains data logging and electronic instrumentation, floor drains, and an open work area. The portions of this system that have been impacted by licensed activities are limited to the process components in contact with waste water that have the potential to collect solids settle from the suspension. Prior to demolition of the SWTP shed, the equipment described above will be removed and separately dispositioned.

Components Remaining as a Result of Process Building Demolition

As discussed in Section 1.4.5, the components remaining as a result of process building demolition activities, listed in Table 1.7 are intended for disposal at the USEI site. The majority of the items listed in Table 1.7 comprise large HEPA filter housings that have been subject to decontamination efforts and coated with fixative to entrain any loose removable contamination. Three HEPA units

* Thicknesses of the concrete slab regions in the Hematite former process and auxiliary buildings range from 4″ to 12″.

were decontaminated as part of the pre-demolition D&D operations until the residual mass associated with each unit is estimated to be no greater than 90% of the waste acceptance criteria for the USEI site. The HEPA filter housings are large, hollow steel boxes with an installed weight of 2580 lbs each (Ref. 13). Assuming a steel density of 7.76 g/cm^3, each HEPA unit comprises a 100% compacted steel volume of greater than 151 L. Hence, even assuming full compaction, the HEPA units will have a ^{235}U concentration below the 0.1 g^{235}U/L USEI limit for disposal.

The various HEPA unit components listed in Table 1.7 comprise a very small quantity of ^{235}U. This small mass total represents a negligible criticality risk even if all of the HEPA unit components were co-located within the decommissioning waste. In practice, the HEPA unit components will be naturally comingled and diluted with surrounding low-concentration decommissioning waste and thus will not exceed the USEI concentration limit for disposal. The low individual ^{235}U mass associated with these items and their natural comingling with the surrounding low concentration structural debris during the building demolition process will ensure their acceptability for consignment to the USEI site for disposal.

Consequently, the components discussed above and listed in Table 1.7 were chosen for consignment to the USEI site for disposal based on the low individual ^{235}U mass associated with these items. Other components resulting from demolition of the process buildings will be shipped offsite and consigned to other disposal sites as appropriate. Thus, providing a very small potential components remaining as a result of process building demolition activities other than those captured in Table 1.7 could be inadvertently packaged for shipment and consigned to USEI for disposal. As a result of this potential, the components remaining at Hematite site intended for disposal at USEI will be verified against those items listed in Table 1.7 prior to transport for disposal.

2.4.5.3 Summary of Risk Assessment

Based on the discussion provided above, it is concluded that there is no potential for a criticality accident due to inadvertently transferring high concentration Hematite segregated wastes to the USEI site. This is because the event sequence would require failure of multiple independent simple administrative CSCs related to removing and segregating waste with concentrations potentially above the USEI limit for receipt and disposal.

- Failure of multiple independent simple administrative CSCs related to segregating and properly labeling waste; and
- The waste would have to comprise material with a ^{235}U concentration significantly higher than expected based or process history and sampling.

2.4.5.4 Safety Controls

The explicit CSCs relied on to provide the criticality safety barriers identified above and thus relied on to preclude waste exceeding the *NCS Exempt Material* criteria from being transferred to the USEI site for disposal are listed below. These controls, coupled with the control reliability arguments presented above, and combined with the use of multiple persons, ensures that this event sequence satisfies the DCP, because two unlikely concurrent failures would be required before a criticality accident could be possible.

Administrative CSC 13: *Prior to demolition of Building 235 and Building 115, all contained contaminated material and contaminated equipment SHALL be removed and segregated to ensure the contained contaminated material cannot be inadvertently consigned to the USEI site for disposal site for disposal as building debris.*

Administrative CSC 14: *Prior to demolition of the SWTP Shed all contaminated SWTP equipment SHALL be removed and segregated to ensure the equipment cannot be inadvertently consigned to the USEI site for disposal.*

Administrative CSC 15: *Prior to demolition of Building235 and Building 115 and the SWTP shed, the surfaces of the respective buildings/shed SHALL be reevaluated and confirmed to not exceed NCS Exempt Criteria prior to for disposal at the USEI site. Note that any buildings/shed not used in future operations involving contaminated material do not require confirmatory characterization.*

Administrative CSC 16: *All process building components intended for offsite transport and consigned at the USEI site SHALL be verified for accuracy by the NCS organization.*

Administrative CSC 17: Administrative *CSCs NSA-TR-HDP-11-11 CSC 13, 14, and 15 shall be independently followed/confirmed by at least one qualified individual.*

In support of the above Administrative CSCs, equipment used for in-situ radiological surveys are designated as Safety Related Equipment, the Safety Functional Requirement being to measure gamma radiation emission from ^{235}U nuclides, which will permit estimation of ^{235}U content when properly calibrated and used in accordance with applicable procedures.

Safety Related Equipment 02: *Assay and analytical equipment used to establish the ^{235}U content of waste material (when being used for the purpose of criticality control) SHALL be capable of appropriately accounting for ^{235}U content with approved calibration appropriately accounting for material properties (material shape, density etc.).*

2.4.6 Wrong material is loaded for shipment to the USEI site

2.4.6.1 Discussion

As stated previously, waste shipped from the Hematite Site must not exceed an average concentration of 0.1 $g^{235}U/L$. This is substantially below (by a factor of 14) the minimum critical infinite sea concentration of 1.4 $g^{235}U/L$ for a fictitious bounding medium consisting of only SiO_2 and ^{235}U (Reference 5) and significantly below the maximum subcritical infinite sea concentration of 4.0 $g^{235}U/L$ for nominal soil (Reference 19).

This upset scenario involves loading the wrong waste for shipment. Note that the upset scenario for waste streams (5) and (6) in Section 1.4 are evaluated in Reference 10. This upset has the potential to allow the concentration limit to be exceeded by shipping higher concentration *Non-NCS Exempt Materials* at the Hematite site to the USEI site.

2.4.6.2 Risk Assessment

As demonstrated in all the previous scenarios for the different sources of wastes, it is considered not likely that the waste streams will contain ^{235}U fissile nuclide average concentrations above the 0.1 $g^{235}U/L$ limit for acceptance at the USEI site based on the types of wastes and the low probability of encountering any significant concentrations of ^{235}U. Furthermore, the sampling of wells, soils, and concrete across the site indicate concentrations well below the USEI concentration limit. In addition to low likelihood that any wastes with significant concentrations of ^{235}U will be exhumed, strict controls will be in place to identify and properly label waste, if waste streams are generated with concentrations above the *NCS Exempt Material* criteria. The controls will be used in up front processes to not only ensure the USEI limits are met, but also to maintain criticality safety at the Hematite site during remediation activities. These strict controls are discussed below.

As discussed in the preceding sections, martial exceeding or potentially exceeding the *NCS Exempt Material* criteria will be subjected to an independent primary evaluation/assay and a secondary independent evaluation/assay, Based on the result, portion(s) of the waste matrix determined to not contain ^{235}U (or to contain acceptably low ^{235}U content) will be extracted, placed into a *waste container* and returned to the main waste stream. The remaining portion(s) is then transferred within a collared drum (CD) to a Fissile Material Storage Area (FMSA) or to a Collard Drum Repack Area (CDRA) (in the event that the drum ^{235}U mass content is relatively small).

In the CDRA, the drum content (i.e., inner container) is removed from the drum and placed into an empty or partially filled standard 55 gallon waste drum (if allowed by SNM packing limits). The drum inventory log traveler is updated to reflect the new consignment.

The Entry and Repack Zone is the only entrance/exit into or from the secure area. All SNM recovered from the site is brought in CDs into this Entry and Repack Zone for proper logging of the material. The secure area personnel are given advance notice prior to all transfers of SNM to the secure area. The doors of the Entry and Repack Zone are maintained in a locked condition when the secure area is not in operation.

When a CD is introduced into the Entry and Repack Zone, personnel first ensure that other SNM material is not present in the Entry and Repack Zone. Since the purpose of this Entry and Repack Zone is to consolidate SNM containers into 55-gallon drums for subsequent storage, the personnel determine an appropriate stored 55-gallon drum to retrieve from the Storage Zone and transfer it to the Entry and Repack Zone. The item from the collared drum is removed and placed into the retrieved 55-gallon drum. The SNM content tally on the drum is properly updated. The drum is then re-lidded and returned to the Storage Zone. The empty CD is verified clean and empty and removed from the secure area. If consolidation of the SNM content is too large or the debris too bulky for repack into an existing stored 55-gallon drum, then an empty 55-gallon drum (staged within the Entry and Repack Zone) is used to transfer the SNM content from the collared 55-gallon drum. The 55-gallon drum is then lidded, properly documented with the SNM transfer, and transferred to the Storage Zone. The repacking SNM limit is $\leq$125 g^{235}U per drum.

All SNM introduced into the Entry and Repack Zone and subsequent consolidations/transfers are logged by the personnel. To ensure that too much SNM does not exist at any given time within the Entry and Repack Zone, a minimum of two operators are always present when the secure area doors are unlocked. This ensures that SNM is not brought into the Entry and Repack Zone without the recognition and acceptance of the secure area personnel. In addition, only a single package of containerized SNM along with an appropriate consolidation drum is approved at a time within the Entry and Repack Zone thereby also preventing too much SNM in this zone at a time.

Operations in a FMSA that is not also a SNM repack area attract the same generic container logging, entry, segregation and oversight controls.

Even if exhumed burial waste contained a significant ^{235}U concentration, the container labeling and the very prescriptive segregation of the waste that does not meet the USEI limits would have to fail concurrently before any waste could be loaded for shipment to USEI.

Based on these considerations, there is no potential for a criticality incident due to inadvertent transfer of high concentration Hematite segregated wastes to the USEI site.

Handling, storage, and repackaging of *Non-NCS Exempt Material* is addressed further in References 25, 26, and 27.

2.4.6.3 Summary of Risk Assessment

Based on the discussion provided above, it is concluded that the following conditions must occur before a criticality accident due to inadvertently transferring high concentration Hematite segregated wastes to the USEI site would be possible:

- Failure to properly label waste and direct waste;
- Inadvertent shipment of wastes with concentrations above the USEI limits; and
- The waste would have to comprise material with a ^{235}U concentration significantly higher than expected based or process history and sampling.

2.4.6.4 Safety Controls

The explicit CSCs relied on to provide the criticality safety barriers identified above and thus relied on to preclude waste being transferred to the USEI site for disposal are listed below. These controls, coupled with the control reliability arguments presented above, and combined with the use of multiple persons, ensures that this event sequence satisfies the DCP, because two unlikely concurrent failures would be required before a criticality accident could be possible.

> **Administrative CSC 04:** *Waste consigned to the USEI site for disposal SHALL not exceed an average concentration of 0.1 g^{235}U/L.*
>
> *Note:*
>
> 1. *In addition to waste that directly meets the fissile nuclide concentration not exceeding 0.1 g^{235}U/L criteria, waste with a fissile nuclide mass content not exceeding 15 g^{235}U and occupying a container with a volume of at least 5 liters is also determined to meet the maximum average concentration of 0.1 g^{235}U/L allowed for shipment to USEI on the basis that the credible combined volume of such waste is small compared to the volume of the bulk waste satisfying the 0.1 g^{235}U/L criteria.*
>
> **Administrative CSC 18:** *Movement/handling of fissile laden containers SHALL be accompanied by at least two different persons that are cognizant of fissile material handling responsibilities.*
>
> **DinD Administrative Control 04:** *The CDRA and FMSA entrance doors should be closed and locked when not in use.*

2.4.7 Migration and Localized Concentration of ^{235}U in USEI Landfill Cells, Leachate System, and/or Evaporation pond

2.4.7.1 Discussion

The preceding event sequences in this NCSA demonstrate that there is no credible scenario of shipping Hematite decommissioning wastes with an average concentration exceeding 0.1 g^{235}U/L to the USEI site. This low concentration level is significantly below the maximum subcritical infinite sea concentration of 4.0 g^{235}U/L for nominal soil (Appendix A). This low concentration level is also substantially below a fictitious minimum critical concentration of 1.4 g^{235}U/L for bounding soil consisting of only SiO_2 per NUREG/CR-6505 (Ref. 5).

This upset scenario pertains to the ^{235}U migration and reconfiguration into an area of the cell that exceeds the minimum critical concentration. The risk assessment that follows demonstrates that the resulting accident sequence is not credible to result in a criticality incident.

2.4.7.2 Risk Assessment

NUREG/CR-6505 (Ref. 5, pg. 45) demonstrates that nominal soil in a slab configuration requires a lower areal density for a criticality to be possible versus a cylindrical or spherical geometry. For instance, at a concentration of 0.006 g^{235}U/cm^3 (i.e., 6 kg^{235}U/L), the calculated critical areal density is 5.2 kg ^{235}U/m^2 for an infinite slab in a planar configuration whereas the corresponding critical linear density for an infinite cylinder is 7.8 kg ^{235}U/m^2. Therefore, achieving a criticality in a cylindrical geometry requires significant lateral and vertical ^{235}U migration. In addition, NUREG/CR-6505 (Ref. 5, pg. 46) demonstrates the corresponding critical areal density for a spherical geometry is 9.34 kg ^{235}U/m^2. Based on the above comparisons, a slab provides the most likely condition for a possible criticality.

Considering that a slab provides the most efficient condition for a criticality, NUREG/CR-6505 (Ref. 17, pg. 96) demonstrates that a slab thickness of 2131 cm and areal density of 30.2 kg/m^2 is required for a criticality to be possible for corresponding density of 1.4 g^{235}U/L for bounding SiO_2 soil. Therefore, not only does the Hematite waste average concentration of 0.1 g^{235}U/L have to increase by a factor of more than ten, but a significant quantity has to migrate to a layer at least 2131 cm (21.31 m) thick for a criticality to be possible. For higher ^{235}U concentrations a smaller slab thickness is required, but the concentration factor must also be higher before a criticality could be possible. For instance, NUREG/CR-6505 (Ref. 5, pg. 99) demonstrates that a slab thickness of 94.57 cm and areal density of 5.4039 kg/m^2 is critical, corresponding to a density of 5.7 g^{235}U/L for the bounding SiO_2 soil. Also, for nominal soil NUREG/CR-6505 (Ref. 5, pg. 94) demonstrates that a slab thickness of 78.86 cm and areal density of 4.732 kg/m^2 is critical, corresponding density of 6.0 g^{235}U/L.

The maximum safe ^{235}U mass of 760 g^{235}U corresponds to a full water-reflected spherical homogeneous mixture of ^{235}U and water ~14 L in volume at an optimum concentration of 55 g^{235}U/L (Ref.16). It is not reasonable to postulate that such idealized conditions could be achieved or even approximated in a waste/soil due to the poor moderating characteristics of these soil/waste materials, relative to full density water, as previously noted. In practice an accumulation representing kilogram quantities of *fissile material* would be required in a compact volume, and with an efficient geometry and distribution, before a criticality could credibly occur.

Section 10 of NUREG/CR-6505 (Ref. 5, pg. 45) concludes that a concentration factor of greater than ten is not considered credible for migration of ^{235}U based on the hydrogeochemical modeling and assumptions used for the Envirocare Site. Section 1.4 of NUREG/CR-6505 (Ref. 5, pg. 2) states that no other sites were considered, but the same analysis methods can be used to evaluate other sites. Therefore, the methodology was compared to the conditions at the USEI site and Reference 6 confirms that the methods and results in NUREG/CR-6505 also support that a concentration factor of greater than ten is also not considered credible for migration of ^{235}U at the USEI site. As stated previously in this NCSA, only waste materials designated as satisfying the HDP *NCS Exempt Material* criteria will be consigned to the USEI site for disposal. The HDP *NCS Exempt Material* criteria is defined as material with a *fissile nuclide* concentration not exceeding 0.1 g^{235}U/L, <u>or</u> material with a *fissile nuclide* mass content not exceeding 15 g^{235}U <u>and</u> occupying a container with a volume of at least 5 liters. Based on the known properties of the bulk waste materials that will be consigned to the USEI site for disposal, it is expected that the vast majority will be classified as *NCS*

Exempt Material based on the low ≤ 0.1 g^{235}U/L concentration criteria. Based on this low concentration level, a criticality incident is not credible at the USEI site due to migration and concentration of ^{235}U, because it would require a concentration increase by more than a factor of ten and Reference 6 concludes that a concentration increase by more than a factor of ten is not credible.

Some waste shipments from the Hematite site to the USEI site may include the contents of ≥ 5 liter containers classified as *NCS Exempt Material* based on a maximum *fissile nuclide* mass content of ≤ 15 g^{235}U. Based on known properties of the waste materials that will be consigned to the USEI site for disposal, it is expected that the quantity of such *NCS Exempt Material* containers will be extremely small relative to the volume of the bulk waste materials comprising ≤ 0.1 g^{235}U/L. On this basis, the potential presence of the contents resulting from a ≥ 5 liter containers classified as *NCS Exempt Material* based on a maximum *fissile nuclide* mass content of ≤ 15 g^{235}U within the bulk low concentration waste materials consigned to the USEI site for disposal will not credibly result in a significant increase in the concentration of the bulk waste materials. If the analysis results demonstrate that the alternate criterion for *NCS Exempt Material* defined above is met, then NCS controls are not required during further on-site handling of this material. This material may be commingled with waste destined for USEI provided that the measured average concentration for the segment of waste that it is joining will not result in the commingled waste exceeding an average concentration of 0.1 g^{235}U/L based on measurements of the wastes being commingled. Considering the significant safety margin established in the risk assessment above for the re-concentration of waste materials in a disposal cell at the USEI site, it is clear that a copious quantity of *NCS Exempt Material* containers would be required before the established safety margin could be eroded. Such conditions are clearly not credible because they would require a large fraction of the Hematite wastes to be discretized into ≥ 5 liter containers. Thus, the determination that a criticality is not credible at the USEI site due to the consignment of waste material classified as *NCS Exempt Material* based on the low ≤ 0.1 g^{235}U/L concentration criteria also applies to the consignment of the contents resulting from a ≥ 5 liter containers classified as *NCS Exempt Material* based on a maximum *fissile nuclide* mass content of ≤ 15 g^{235}U.

The conclusion that a criticality is not credible at the USEI site is further supported by the following supporting information.

<u>Disposal Cell Placement Practices</u>

Once in the cell, the concentration of ^{235}U will be reduced by the process of spreading and the inevitable commingling of the Hematite waste with other materials in the cell. This occurs because the Hematite waste will be emplaced concurrently with wastes from other generators. The projected receipts from Hematite are expected to be received over a period of twenty-four months and would comprise approximately five 20-ton truck shipments daily. Since the USEI site receives an average of one hundred 20-ton truck shipments daily, the ^{235}U concentration in the Hematite waste is likely to be reduced by a factor of 20 as a result of the disposal process.

Since the average precipitation at the facility is only 5-7 inches per year, with an evapo-transpiration potential of greater than 42 inches per year, there is very little potential for infiltration once the cell is closed. Since the ^{235}U is an oxide and the cell is an anoxic environment with an approximate pH of

10, it is not readily transportable.

Much of the waste that will be received concurrent to the Hematite waste receipts is treated prior to disposal. The treatment process involves the use of reagents, clay, or other materials that greatly reduce the potential for contaminants to be transported. These treated wastes, which will be commingled with the Hematite waste, will form barriers to moisture infiltration, and also reduce the potential for infiltration to transport any ^{235}U that may leach from the Hematite waste.

For these reasons, no concentration of Hematite waste is anticipated to occur due to existing waste placement practices. Rather, a 20-to-1 dilution factor is projected due to waste placement.

Leachate

Because USEI's disposal cell meets EPA's Minimum Technical Requirements (MTR), it is constructed of a triple liner system consisting of two synthetic liners and a natural clay liner. Leachate collection systems exist between the two synthetic liners, and above the top synthetic liner. Historic leachate generation data was analyzed to determine whether concentration could occur in the leachate or the leachate sump system.

USEI's disposal cells collect leachate that is generated as a result of precipitation in open cells, dust control water applied to waste in the cells, and condensation of moisture from wastes. Once a cell is closed, the amount of leachate produced decreases with time. The conditions at the USEI facility are such that after five years, leachate is generally no longer being produced in quantities to be pumped. Consequently, consistent with the MTR and design purpose of the cell, the infiltration transport mechanism is nullified for the long-term.

In 2008 USEI generated 300,000 gallons of leachate from its current active disposal cell (Cell 15). The leachate is produced primarily from precipitation and dust control water, and represents the most likely transport mechanism for contaminants in disposed wastes. The leachate is pumped regularly and sampled periodically by USEI, with results reported to the State of Idaho as a condition of the facility's operating permit. Due to the conditions in the disposal cell, the leachate produced meets EPA F039 Non-Wastewater treatment standards for inorganic metals. In other words, such low concentrations of heavy metals are found in USEI's leachate that it does not qualify as a "characteristic" hazardous waste. This is also supported by empirical data documented in annual reports to the State of Idaho and USEPA. These facts support the view that extremely small quantities of ^{235}U from Hematite waste, if any, would be expected to be transported to the leachate while Cell 15 remains open, and would present no criticality safety concern.

The Hematite waste is expected to be received over a period of twenty-four months. As the waste is received, it will be commingled with other wastes. As the waste is covered, an infiltration and evaporative barrier is formed, limiting the moisture transport mechanism's ability to dissolve and transport available ^{235}U from the Hematite waste.

USEI collects leachate from the sumps in four 16,500 gallon tanks. Periodically, USEI pumps the collected leachate in the tanks through an activated carbon filtration system. The carbon used in the

filtration system is a coarse grain grade specifically designed to remove volatile organics and is ineffective for removing metals. Consequently, ^{235}U or other inorganic contaminants do not concentrate in the carbon. Once a year, USEI checks the tanks for sediment and removes any that may have collected.

Surface Impoundments (Collection and Evaporation Ponds)

Leachate collected in USEI's active landfill sumps is pumped by remote means through an enclosed piping system to large storage tanks where it is commingled with leachate produced by closed, non-radioactive disposal cells. A small dilution factor occurs, but is not used in the calculation below. Conversely, no further concentration occurs in the storage tanks.

Since the leachate produced at USEI's facility meets EPA F039 Non-Wastewater F039 treatment standards for inorganic heavy metals and all other chemicals pertaining to the F039 waste code, it is discharged from the interim storage tanks directly to a RCRA Subtitle K permitted surface impoundment. All of the liquid being discharged to the surface impoundment is eventually evaporated. If ^{235}U from the Hematite waste were to be discharged to the impoundment, it would be commingled with the sludge already in the impoundment. As of April 2009, the impoundment contains approximately 725 yards of sludge with a density of 90 lbs/ft3 (8.00E x 10^8 g). Based on the extremely small quantities of ^{235}U from Hematite waste, if any, that could be expected to be transported to the leachate while Cell 15 remains open, there would be an extremely high *non-fissile/fissile material* ratio, representing no potential for a criticality incident.

In summary, the waste placement practices, empirical leachate concentration data, and operating practices for USEI's surface impoundment support that the basis that there should be no increase in the ^{235}U concentration to the extent that it would present a credible criticality concern. The conclusions made in References 5 and 6 also demonstrate that a concentration increase by a factor of ten or greater is not credible. Therefore, the conclusion above that a criticality is not considered credible is fully supported based on the 0.1g ^{235}U/L Hematite waste concentration limit, considering a subcritical limit of 1.4 grams ^{235}U/L for a bounding soil (SiO_2 only) and the maximum subcritical infinite sea concentration of 4.0 g^{235}U/L for nominal soil (Appendix A).

2.4.7.3 Summary of Risk Assessment

Based on the discussion provided above, it is concluded that it is not credible for this scenario to result in a criticality accident at the USEI site. Consequently no controls are identified to ensure the subcriticality of Hematite wastes at the USEI site. All the controls for this scenario are provided in previous accident sequences to ensure that the USEI site waste acceptance average concentration limit of 0.1 g^{235}U/L is not exceeded.

3.0 SUMMARY OF CRITICALITY SAFETY CONTROLS

3.1 Criticality Safety Parameters

The extent of control of each of the various criticality safety parameters introduced in Section 2.1 is summarized in Table 3.1.

Table 3.1 Criticality Safety Parameters

Nuclear Parameter	Controlled (Y/N)	Basis	Reference
Geometry	N	The safety assessment of receipt and burial of Hematite wastes at the USEI site does not credit geometry.	N/A
Interaction	N	The safety assessment of receipt and burial of Hematite wastes at the USEI site credits administrative CSCs to ensure that high concentration wastes that may normally require spacing are not shipped to the USEI site.	Section 2.4.6
Mass	N	The safety assessment of receipt and burial of Hematite wastes at the USEI site credits administrative CSCs to ensure that there is no potential to form a maximum safe mass at the USEI site.	Sections 2.4.1, 2.4.2, 2.4.3, 2.4.4, 2.4.5, 2.4.6, and 2.4.7
Isotopic / Enrichment	N	The safety assessment of receipt and burial of Hematite wastes at the USEI site is conservatively based on subcritical limits derived for uranium metal with 100 wt.% $^{235}U/U$ enrichment.	N/A
Moderation	N	The safety assessment of receipt and burial of Hematite wastes at the USEI site is conservatively based on subcritical limits derived for uranium-H_2O and/or uranium-soil mixtures at optimum concentration.	N/A
Density	N	The safety assessment of receipt and burial of Hematite wastes at the USEI site is conservatively based on subcritical limits derived for uranium metal at maximum theoretical density.	N/A

Nuclear Parameter	Controlled (Y/N)	Basis	Reference
Heterogeneity	N	The safety assessment of receipt and burial of Hematite decommissioning wastes at the USEI site is conservatively based on subcritical limits derived for homogeneous uranium-H_2O mixtures (with 100 wt.% $^{235}U/U$ enrichment), for which subcritical limits are smaller than equivalent heterogeneous uranium-H_2O mixtures.	N/A
Neutron Absorbers	N	The safety assessment of receipt and burial of Hematite decommissioning wastes at the USEI site does not credit fixed neutron absorbers.	N/A
Reflection	N	The safety assessment of receipt and burial of Hematite decommissioning wastes at the USEI site conservatively uses subcritical limits based on full (i.e., 30 cm) thickness close fitting water reflection and/or soil conditions, which are considered to bound any credible reflection condition.	N/A
Concentration	N	The safety assessment of receipt and burial of Hematite decommissioning wastes at the USEI site credits administrative CSCs to ensure that there is no potential to ship waste with an unanalyzed concentration to the USEI site.	Sections 2.4.1, 2.4.2, 2.4.3, 2.4.4, 2.4.5, , 2.4.6, and 2.4.7
Volume	N	The safety assessment of receipt and burial of Hematite decommissioning wastes at the USEI site does not credit volume control.	N/A

3.2 Criticality Safety Controls and Defense-in-Depth Controls

This section provides a schedule of Systems, Structures, and Components (SSCs), CSCs and DinD controls that have been established as important to safety in the risk assessment of Hematite decommissioning waste receipt and disposal at the USEI site.

3.2.1 Systems, Structures, and Components

The following SSCs have been recognized as important to ensuring the criticality safety of Hematite decommissioning waste receipt and disposal at the USEI site. The SSCs are identified as Safety Related Equipment (active function).

Safety Related Equipment 01: *Radiological survey instruments used for in-situ or non-assay, field waste characterization SHALL be capable (when used in support of a CSC) of measuring ^{235}U content when used in conjunction with an approved calibration basis.*

Safety Related Equipment 02: *Assay and analytical equipment used to establish the ^{235}U content of waste material (when being used for the purpose of criticality control) SHALL be capable of appropriately accounting for ^{235}U content with approved calibration appropriately accounting for material properties (material shape, density etc.).*

3.2.2 Criticality Safety Controls

The following CSCs have been recognized as important to ensuring the criticality safety of Hematite decommissioning waste receipt and disposal at the USEI site.

Administrative CSC 01: *Soil in the vicinity of subterranean structures (e.g., subterranean piping, septic tanks, etc.) and underlying soil and ground regions beneath concrete slabs within the environs of Buildings 240 and 260 SHALL be independently assayed to identify Non-NCS Exempt Materials prior to exhumation using independent assay instruments (i.e., physically separate). The material SHALL to not exceed the NCS Exempt Criteria prior to treating as NCS Exempt Material for USEI.*

Notes:

1. *Soil in the vicinity of subterranean structures SHALL include all regions within 12" of the surface of the affected subterranean structure. Assay of the soil region extending beyond 12" from the surface of the subterranean structure SHALL continue until the soil in the vicinity of the affected subterranean structures is determined to be below the NCS Exempt Material criteria.*
2. *This CSC does not apply to underground utilities such as electrical conduit or gas lines.*

Administrative CSC 02: *Following removal of Non-NCS Exempt Materials from the areas specified in CSC 01, the remaining portion(s) of the radiologically surveyed area may be exhumed and dispositioned as NCS Exempt Material. However, the material excavation depth SHALL NOT exceed the maximum permitted cut depth established in the radiological survey equipment calibration basis.*

Notes:

1. *Exceeding the maximum permitted cut depth is an anticipated process upset due to the potential difficulty in performing precise*

depth excavations. More than three sequential instances of failing to adhere to the maximum permitted cut depth in an excavation area would not present any credible criticality safety concerns, and is credited as an unlikely condition. Consequently, more than three sequential instances of failing to adhere to the maximum permitted cut depth constitutes a violation of this CSC.

Administrative CSC 03: *All reasonably practicable measures SHALL be taken to minimize the potential to exhume a layer of soil debris exceeding the maximum permitted cut depth. Consideration should be given to:*

- *Controlling the excavation depth to a value smaller than the maximum permitted cut depth to provide margin;*
- *Employing excavation techniques and equipment that allow for an optimally controlled depth excavation; and*
- *Use of markers or other tools to provide indication when exceeding the maximum permitted cut depth.*

Administrative CSC 04: *Waste consigned to the USEI site for disposal SHALL not exceed an average concentration of 0.1 $g^{235}U/L$.*

<u>*Note:*</u>

1. *In addition to waste that directly meets the fissile nuclide concentration not exceeding 0.1 $g^{235}U/L$ criteria, waste with a fissile nuclide mass content not exceeding 15 $g^{235}U$ and occupying a container with a volume of at least 5 liters is also determined to meet the maximum average concentration of 0.1 $g^{235}U/L$ allowed for shipment to USEI on the basis that the credible combined volume of such waste is small compared to the volume of the bulk waste satisfying the 0.1 $g^{235}U/L$ criteria.*

Administrative CSC 05: *Administrative CSCs NSA-TR-HDP-11-11 CSC 02, and 03 SHALL be independently followed/observed for adherence to procedure by at least one qualified individual.*

<u>Notes:</u>

1. *NSA-TR-HDP-11-11 CSC 01is not required to be independently followed/observed since the set point established in HDP work procedures to comply with CSC 01 is common to both surveys.*

Administrative CSC 06: *Radiological surveys performed in support of CSCs SHALL use only equipment that is approved and appropriately calibrated to satisfy the NCS Performance Requirement of accounting for potential under-reading due to the effect of credible variation in uranium distribution, particle size, and attenuation of the photon intensity within the media.*

Administrative CSC 07: *All subterranean piping sections SHALL be exposed prior to excavation by removing the overlying soil.*

Administrative CSC 08: *All subterranean piping (i.e., intact and crushed subterranean piping) SHALL be independently assayed to identify Non-NCS Exempt Materials using independent assay instruments (i.e., physically separate). The material SHALL to not exceed the NCS Exempt Criteria prior to treating as NCS Exempt Material for USEI.*

Notes:

1. *In lieu of two external independent surface measurements, internal in-situ radiological surveys of the subterranean piping coupled with visual data may be used, provided this method is evaluated and documented in a NCSA.*
2. *This CSC does not apply to underground utilities such as electrical conduit or gas lines*

Administrative CSC 09: *Following extraction of subterranean piping sections, the soil in the vicinity of subterranean piping SHALL be independently assayed to identify Non-NCS Exempt Materials using independent assay instruments (i.e., physically separate). The average ^{235}U concentration of the soil debris SHALL be demonstrated to not exceed 0.1g ^{235}U/L prior to treating as NCS Exempt Material for USEI.*

Notes:

1. *This CSC does not apply to underground utilities such as electrical conduit or gas lines.*

Administrative CSC 10*: Administrative CSCs NSA-TR-HDP-11-11 CSC 06, and 07 SHALL be independently followed/observed for adherence to procedure by at least one qualified individual.*

Notes:

1. *NSA-TR-HDP-11-11 CSC 08 is not required to be independently followed/observed since the set point established in HDP work procedures to comply with CSC 08 is common to both surveys.*

Administrative CSC 11: *The septic tank and sewage treatment tanks and their material content SHALL be independently assayed to identify Non-NCS Exempt Materials prior to exhumation using independent assay instruments (i.e., physically separate). The material SHALL to not exceed the NCS Exempt Criteria prior to treating as NCS Exempt Material for USEI.*

Notes:

1. *The exhumation of the associated drain field, drain line, and the septic tank and sewage treatment tank structure is not permitted and SHALL not occur without approval from the NCS Organization.*

Administrative CSC 12 *Administrative CSCs NSA-TR-HDP-11-11 CSC 02 and 03 SHALL be independently followed/observed for adherence to procedure by at least one qualified individual.*

Notes:

2. *NSA-TR-HDP-11-11 CSC 11 is not required to be independently followed/observed since the set point established in HDP work procedures to comply with CSC 11 is common to both surveys.*

Administrative CSC 13: *Prior to demolition of Building 235 and Building 115, all contained contaminated material and contaminated equipment SHALL be removed and segregated to ensure the contained contaminated material cannot be inadvertently consigned to the USEI site for disposal as building debris.*

Administrative CSC 14: *Prior to demolition of the SWTP Shed all contaminated SWTP equipment SHALL be removed and segregated to ensure the equipment cannot be inadvertently consigned to the USEI site for disposal.*

Administrative CSC 15: *Prior to demolition of Building235 and Building 115 and the SWTP shed, the surfaces of the respective buildings/shed SHALL be reevaluated and confirmed to not exceed NCS Exempt Criteria prior to disposal at the USEI site. Note that any buildings/shed not used in future operations involving contaminated material do not require confirmatory characterization.*

Administrative CSC 16: *All process building components intended for offsite transport and consigned at the USEI site SHALL be verified for accuracy by the NCS organization.*

Administrative CSC 17: *Administrative CSCs NSA-TR-HDP-11-11 CSC13, 14, and 15, shall be independently followed/confirmed by at least one qualified individual.*

Administrative CSC 18: *Movement/handling of fissile laden containers SHALL be accompanied by at least two different persons that are cognizant of fissile material handling responsibilities.*

Based on the history of the site and site documentation (refer to Section 1.2.1.1), there is no expectation that fissile nuclides other than ^{235}U could exist within the site boundary. There is also no expectation that fissile liquids are present. These key assumptions are captured in the following CSCs:

Administrative CSC 19: *In the event that the presence of fissile nuclides other than ^{235}U are identified (e.g., as a result of radiological assay at a MAA), operations in the respective area SHALL cease and the NCS organization notified.*

3.2.3 Defense-in-Depth Controls

This section lists those controls that do not directly support event sequence DCP compliance determinations, or directly support a not credible determination. These DinD controls either reinforce CSCs or provide additional protection to ensure that the risk of criticality is as low as is reasonably achievable.

DinD Administrative Control 01: *The upper surface of the concrete slabs residing in the following former facilities should be ensured to have been coated with a fixative prior to exhumation:*

- ⇨ *Building 235*
- ⇨ *Building 240*
- ⇨ *Building 252*
- ⇨ *Building 253*
- ⇨ *Building 254*
- ⇨ *Building 255*
- ⇨ *Building 256*
- ⇨ *Building 260*

DinD Administrative Control 02: *Following excavation of concrete debris, the underside of the excavated concrete should be inspected for any attached sub-surface debris (e.g., mounds of soil, embedded piping, etc.). Any identified attached debris should be radiologically surveyed for ^{235}U content, or removed and later radiologically surveyed for ^{235}U content during survey of the surrounding exposed soils. Any identified Non-NCS Exempt debris should be handled and containerized as Non-NCS Exempt Material.*

Notes:

1. *This CSC only applies to concrete surfaces within the environs of Building 240 and Building 260.*

DinD Administrative Control 03: *In the event of removal of a layer of material exceeding the maximum permitted cut depth, the exhumed material should be deposited in the excavation area and re-evaluated (i.e., re-inspected/re-surveyed according to the fissile content screening and waste exhumation procedures).*

DinD Administrative Control 04: *The CDRA and FMSA entrance doors should be closed and locked when not in use.*

4.0 CONCLUSION

This criticality safety assessment demonstrates that the disposal of Hematite decommissioning waste at the USEI site can be safely performed. The assessment has determined that there are very large margins of safety under normal (i.e., expected) conditions and that there is considerable tolerance to abnormal conditions. Under all normal and foreseen abnormal conditions a criticality event is considered either not credible or is precluded by controls in place at the Hematite site.

5.0 REFERENCES

1. American National Standard for Nuclear Criticality Safety in Operations with Fissionable Materials Outside Reactors, ANS-8.1, American Nuclear Society.

2. Atlantic Richfield Hanford Company (1969), Criticality Handbook Volume II, R D Carter, G R Kiel, K R Ridgway.

3. LA-10860-MS, Critical Dimensions of Systems Containing ^{235}U, ^{239}Pu, and ^{233}U, 1986 Revision.

4. NSA-TR-09-05, Rev. 1, Nuclear Criticality Safety Calculations to Support Criticality Parameter Sensitivity Studies for ^{235}U Contaminated Soil/Wastes, August 2009.

5. NUREG/CR-6505, Vol. 1, The Potential for Criticality Following Disposal at Low-Level Waste Facilities, June 1997.

6. SAHEM00194-09-0003, Application of NUREG-6505V2 to Waste from the Hematite Site, Geological Engineering and Environmental Services Company, February 6, 2009.

7. Section II US Ecology Idaho Facility Overview.

8. NSA-TR-09-25, Rev. 0, Nuclear Criticality Safety Assessment of Decontamination and Decommissioning Operations within the Former Process Buildings at the Hematite Site, B. Matthews, December 2009.

9. NSA-TR-09-23, Rev. 0, Calculations to Establish an Estimate of the Mass of ^{235}U Associated with the Floors, Walls, Ceilings, and Roof of the Hematite Facility Former Process Buildings, C. Henkel, October 2009.

10. NSA-TR-09-14, Rev. 5, Nuclear Criticality Safety Assessment of the US Ecology Idaho (USEI) Site for the Land Fill Disposal of Decommissioning Waste from the Hematite Site, D. Mann and J. Bazley, March 2012.

11. Barnebey & Sutcliffe drawing #27268, HEPA Filter Housings, March 9, 1989.

12. NSA-TR-09-21, Rev. 0, Calculations to Establish an Estimate of the Mass of ^{235}U Associated with Piping, Ventilation Duct, and Miscellaneous Components in the Hematite Facility Former Process Buildings, B. Matthews, October 2009.

13. NSA-TR-09-22, Rev. 0, Calculations to Establish an Estimate of the Mass of ^{235}U Associated with Equipment Remaining in the Hematite Facility Former Process Buildings, M. Corum, October 2009.

14. NSA-TR-10-02, Rev. 0, Calculations to Establish an Estimate of the Mass of ^{235}U Associated with the Floors, Walls, Ceilings, and Roof of Various Hematite Facility Non-Former Production Buildings, C. Henkel, February 2010.

15. Westinghouse drawings C-5019-2001, B-5019-2002, B-5019-3011 and vendor literature for shredder, blender, and sifter, and vendor literature for structural steel weight.

16. Westinghouse drawing D-5018-8011 and vendor literature for stainless material weight.

17. HDP-TBD-WM-902, Building Demolition Debris Volume and Weight Estimate.

18. Westinghouse (E. K. Hackmann) letter to NRC (Document Control Desk), HEM-09-121, dated October 23, 2009, "Hematite Decommissioning Project Summary Report of the 2009 Process Building"

19. NSA-TR-09-15, Rev. 3, Nuclear Criticality Safety Assessment of Buried Waste Exhumation and Contaminated Soil Remediation at the Hematite Site, B. Matthews and D. Mann, February 2012.

20. NSA-TR-10-12 Rev. 2, Calibration Analysis for ^{235}U Response from Burial Pit Waste Materials at the Hematite Facility, C. Henkel, March 2011.

21. Buried Waste Characterization Plan for the Hematite Site, NRC Docket 070-0036, June 2006.

22. Westinghouse Software/Calculation Validation Report of Concrete Core Sample Results, A. Wilding, January 12, 2011

23. NSA-TR-HDP-11-02, Rev. 0, Calculations to Establish an Estimate of the Mass of ^{235}U Associated with Subsurface Piping in the Hematite Facility, S. Kahook, May 2011.

24. NSA-TR-09-08, Rev. 1, NCSA of Sub-Surface Structure Decommissioning at the Hematite Site, B. Matthews and D. Mann, November 2011.

25. NSA-TR-09-11, Rev. 2, NCSA of Collared Drum Repack Area Operations at the Hematite Site, B. Matthews, January 2012.

26. NSA-TR-09-10, Rev. 2, NCSA of Collared Drum Staging, Buffer Storage, and Transit at the Hematite Site, B. Matthews, January 2012.

27. NSA-TR-09-12, Rev. 3, NCSA of Fissile Material Storage at the Hematite Site, B. Matthews, January 2012

APPENDIX A

Relevant Criticality Data

CHARACTERISTICS OF BURIED WASTES AND CONTAMINATED SOILS

It is considered that building demolition debris is generally a low-risk *fissile material* because the form and associated matrix conditions are far from optimum for a neutron chain reaction. The characteristics of building demolition debris are completely dissimilar to those of an efficient fissile system. Efficient critical systems comprise:

- Efficient moderating materials;
- Uniform fissile / moderator mixtures;
- Concentrations of several tens of grams fissile per liter;
- Compact arrangements;
- Lack of voidage and diluents;
- Lack of neutron poisons; and
- Efficient reflectors or interaction with other *fissile material*.

As each parameter, or combination of parameters, moves away from the optimum the fissile mass required for a criticality increases. As this mass increases the probability that such a high fissile mass could have arisen and remained undetected decreases.

While criticality would be possible under highly non-optimum conditions (e.g., in low density, poisoned systems) the fissile mass needed for criticality (i.e., many kilograms) would far exceed credible quantities.

Single Items

The presence of a sufficiently large fissile mass (i.e., ≥ a minimum critical mass) in a single accumulation could potentially result in a criticality. The maximum subcritical mass for ^{235}U in water is 760 g (Ref. 1), corresponding to optimum conditions of:

- Spherical homogeneous accumulation of ^{235}U/ water;
- Full water moderation (i.e., full density water, no poisons, diluents, voidage etc.);
- Optimum concentration of approximately 55 g^{235}U/L (corresponding to a volume of approximately 14 liters);
- Full water reflection; and
- Isotopic content of 100 w/o ^{235}U.

This value has traditionally been used in the assessment of isolated HEU units as a pessimistic but bounding case to generically consider all possible conditions within contaminated wastes.

As discussed above, the nature of building demolition debris is such that it is not considered credible that a situation could arise in which all parameters are optimized and the presence of a minimum critical mass would result in a criticality. The reactivity of any system and hence the fissile mass that would be required for criticality is dependent on the combination of a number of parameters, e.g., concentration, moderating properties of the waste matrix, geometry and reflection conditions.

CRITICAL AND SUBCRITICAL LIMITS

Table A-1 outlines the subcritical and critical limits for ^{235}U-water systems.

Table A-1 Single Parameter Limits for homogeneous ^{235}U/water mixtures

Parameter	Critical Limit[1]	Maximum Subcritical Limit[2]	Description / Restrictions
Mass	820 g^{235}U	760 g^{235}U	Any geometrical configuration, even when optimally moderated and fully reflected by water. Applies to all chemical forms (e.g., oxides as powders, metals, etc.).
Concentration	11.8 g^{235}U/L	11.6 g^{235}U/L	Unlimited volume of homogeneous solution in any chemical form (e.g., nitrate, oxalate, etc.), and in any geometry.
Volume	6.1 L	5.5 L	Homogeneous solution in any chemical form (e.g., nitrate, oxalate, etc.), at any concentration, fully reflected by water.
Geometry (∞ Cylinder Diameter)	14.3 cm	13.7 cm	Homogeneous solution in any chemical form (e.g., nitrate, oxalate, etc.), at any concentration and volume, and fully reflected by water.
Geometry (∞ Slab Thickness)	4.9 cm	4.4 cm	Homogeneous solution in any chemical form (e.g., nitrate, oxalate, etc.), at any concentration and volume, and fully reflected by water.
Geometry (∞ Slab Areal Concentration)	390 g/ft^2 (0.42 g/cm^2)	372 g/ft^2 (0.40 g/cm^2)	Homogeneous solution in any chemical form (e.g., nitrate, oxalate, etc.), any volume (i.e., any slab depth) and fully reflected by water.

Source: Ref. 1and Ref. 2

Notes:
1. Ref. 2, page III.B-2
2. Ref. 1, Table 1

Table A-2 outlines the single parameter critical limits for homogeneous U-water systems as a function of the U enrichment.

Table A-2 Critical Limits for homogeneous U/water mixtures as a function of U enrichment

U Enrichment wt.% $^{235}U/U$	Spherical Critical Mass (g)	Spherical Critical Volume (L)	Critical ∞ Cylinder Diameter (cm)	Critical ∞ Slab Thickness (cm)
3#	3200	80.0	38.0	20.0
5#	1950	37.0	28.0	14.0
30.3#	990	11.0	19.0	7.4
100##	820	6.1	14.3	4.9

Source: Ref. 2 and Ref. 3

Notes:
Ref. 2, page III.B-2
Ref. 3, Figures 14-17

Reference 4 presents the results of a broad and comprehensive set of calculations performed to compare the reactivity of various finite and infinite systems containing uranium. This calculation established a minimum critical infinite sea concentration for a ^{235}U/soil mixture of 6.3g^{235}U/L. Assuming a maximum safe fissile concentration of 4.0 g^{235}U/L provides a substantial subcritical margin of 2.3 g^{235}U/L. This margin is considered sufficiently large to also address any additional penalty that may be appropriate to account for validation of the materials modeled in the calculations used to establish the limit.

Enclosure 6 to HEM-12-88

RESRAD Input Parameters
Revision 1

Westinghouse Electric Company LLC
US Ecology Idaho, Inc.

Westinghouse Electric Company LLC, Hematite Decommissioning Project

Docket No. 070-00036

RESRAD Input Parameters
Revision 1
(Originally Attachment 4 to Enclosure 1 to HEM-12-2)

(2 pages)

Calculation of Baseline Receipt Rate

Basis – material receipt for last 6 years was averaged.

Year	Tons
2010	512,000
2009	640,000
2008	918,000
2007	932,000
2006	713,000
2005	633,000
Total	4,348,000
Average	725,000

Calculation of RESRAD Model Contaminated Zone Height

Input Parameters

USEI Contaminated Zone Surface Area = 40,468 m^2
Density of all Waste Received at USEI = 1.5 g/ cm^3 = 1.655 ton/m^3
Mass of all Waste Received at USEI = 725,000 ton

Equations Used

USEI Contaminated Zone Height =
(Volume of USEI Waste Received) / (Contaminated Zone Surface Area)

Volume of Waste Received at USEI =
(Mass of USEI Waste Received) / (Density of USEI Waste)

Calculation

Volume of Waste Received at USEI = 725,000 ton /1.655 ton/m^3 = 438,066 m^3
USEI Contaminated Zone Height = 438,066 m^3 / 40,468 m^2 = 10.83 m

Calculation of RESRAD Input Concentrations Input Parameters

USEI Contaminated Zone Surface Area = 40,468 m^2
Density of Waste Received at USEI = 1.5 g/ cm^3 = 1.655 ton/m^3
Mass of Waste Received at USEI = 725,000 ton
Volume of Hematite Waste Received at USEI = 22,848 m^3
Density of Hematite Waste (as shipped) = 1.54 g/cm^3 = 1.69 ton/m^3

Equations Used

Cell Concentration = Concentration Shipped Material × Dilution Factor
Dilution Factor = (Mass of Hematite Waste) / (Total Mass of Waste Received)
Mass of Hematite Waste = Volume of Hematite Waste × Density of Hematite Waste

Calculations

Mass of Hematite Waste = 22,848 m^3 × 1.69 tons / m^3 = 38,710 ton
Dilution Factor = 38,710 ton / (725,000 ton)= 0.053

Resulting Radionuclide Input Values for RESRAD Model

Radionuclide	Concentration (pCi/g)	
	Shipped	Modeled[a]
Tc-99	7.2E+00	3.8E-01
U-234	6.2E+01	3.3E+00
U-235	2.8E+00	1.5E-01
U-238	1.3E+01	6.8E-01

[a] Modeled Concentration = Shipped Concentration × Dilution Factor

Input Values used in Sensitivity Analysis

Basis = total activity is held constant (0.4 Ci Tc-99); shipping time varied from 13 weeks to 104 weeks. Total waste received at USEI is based on receipt rate of 725,000 ton/yr or 13,942 ton/wk under the baseline case assumption is 52 weeks.

Shipping Time (wks)	Mean Tc-99 Shipped (pCi/g)	HDP Waste Shipped (ton)	Total Waste Received at USEI (ton)	Total Waste Volume (m^3)	Height of Contaminated Zone (m)	Tc-99 (cell) (pCi/g)	Post Closure Dose (mrem)
13	28.4	9,677	181,250	109,517	2.71	1.53	0.99
17	21.3	12,903	241,667	146,022	3.61	1.15	0.98
26	14.2	19,355	362,500	219,033	5.41	0.77	0.94
35	10.6	25,806	483,333	292,044	7.22	0.58	0.88
52	7.1	38,710	725,000	438,066	10.83	0.38	0.76
104	3.5	77,419	1,450,000	876,133	21.65	0.19	0.50

Enclosure 7 to HEM-12-88

HDP and USEI Occupational Injury and Illness Data
Revision 1

Westinghouse Electric Company LLC
US Ecology Idaho, Inc.

Westinghouse Electric Company LLC, Hematite Decommissioning Project

Docket No. 070-00036

HDP and USEI Occupational Injury and Illness Data
Revision 1
(Originally Attachment 9 to Enclosure 1 to HEM-12-2)

Work-related injuries at the HDP

Year	Work Hours	Injuries	OSHA Recordable Injury/Illness	Fatalities	Injuries per 10,000 hours
2001	438,404	67	50	0	1.5
2002	115,832	11	5	0	1.0
2003	86,736	1	0	0	0.1
2004	52,208	0	0	0	0
2005	169,739	18	3	0	1.1
2006	144,480	26	1	0	1.8
2007	57,760	0	0	0	0
2008	114,000	0	0	0	0
2009	120,623	0	0	0	0
2010	111,015	1	1	0	0.2
2011	146,727	5	0	0	0.3
TOTAL	**1,557,524**	**129**	**60**	**0**	**N/A**

Work-related injuries at the USEI

Year	Work Hours	Injuries	OSHA Recordable Injury/Illness	Fatalities	Injuries per 10,000 hours
2001	87,362	9	5	0	1.0
2002	81,707	8	3	0	1.0
2003	93,490	18	2	0	1.9
2004	94,872	16	3	0	1.7
2005	121,048	20	4	0	1.6
2006	158,800	22	5	0	1.4
2007	180,683	40	7	0	2.2
2008	179,072	30	3	0	1.7
2009	149,929	16	3	0	1.1
2010	117,151	14	2	0	1.2
2011	133,366	5	2	0	0.375
TOTAL	**1,397,480**	**198**	**39**	**0**	**N/A**

Enclosure 8 to HEM-12-88

Revised Microshield Software Output Results for Stabilization Operator

Westinghouse Electric Company LLC
US Ecology Idaho, Inc.

Westinghouse Electric Company LLC, Hematite Decommissioning Project

Docket No. 070-00036

MicroShield 7.02
Westinghouse Electric Company (08-MSD-7.02-1424)

Date	By	Checked

Filename	Run Date	Run Time	Duration
Stabilization Operator.ms7	July 19, 2012	9:27:36 AM	00:00:00

Project Info	
Case Title	USEI Stab. Worker
Description	USEI SSPA, Density=1.54 g/cc
Geometry	13 - Rectangular Volume

Source Dimensions	
Length	385.572 cm (12 ft 7.8 in)
Width	385.572 cm (12 ft 7.8 in)
Height	385.572 cm (12 ft 7.8 in)

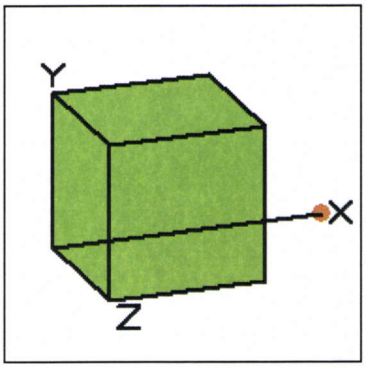

Dose Points			
A	X	Y	Z
#1	665.988 cm (21 ft 10.2 in)	0.0 cm (0.0 in)	0.0 cm (0.0 in)

Shields			
Shield N	Dimension	Material	Density
Source	5.73e+07 cm³	Concrete	1.54
Air Gap		Air	0.00122

Source Input: Grouping Method - Actual Photon Energies				
Nuclide	Ci	Bq	µCi/cm³	Bq/cm³
Pa-234				
Pa-234m				
Th-231				
Th-234				
U-234	5.7321e+001	2.1209e+012	1.0000e+000	3.7000e+004
U-235				
U-238				

Buildup: The material reference is Source Integration Parameters	
X Direction	20
Y Direction	20
Z Direction	20

Results					
Energy (MeV)	Activity (Photons/sec)	Fluence Rate MeV/cm²/sec No Buildup	Fluence Rate MeV/cm²/sec With Buildup	Exposure Rate mR/hr No Buildup	Exposure Rate mR/hr With Buildup
0.013	2.228e+11	4.971e-08	5.448e-08	6.688e-09	7.329e-09
0.0532	2.503e+09	2.333e-01	4.539e-01	5.548e-04	1.080e-03
0.1214	8.495e+08	4.025e-01	1.246e+00	6.304e-04	1.952e-03
Totals	**2.261e+11**	**6.358e-01**	**1.700e+00**	**1.185e-03**	**3.031e-03**

MicroShield 7.02
Westinghouse Electric Company (08-MSD-7.02-1424)

Date	By	Checked

Filename	Run Date	Run Time	Duration
Stabilization Operator.ms7	July 19, 2012	9:26:49 AM	00:00:00

Project Info	
Case Title	USEI Stab. Worker
Description	USEI SSPA, Density=1.54 g/cc
Geometry	13 - Rectangular Volume

Source Dimensions	
Length	385.572 cm (12 ft 7.8 in)
Width	385.572 cm (12 ft 7.8 in)
Height	385.572 cm (12 ft 7.8 in)

Dose Points			
A	X	Y	Z
#1	665.988 cm (21 ft 10.2 in)	0.0 cm (0.0 in)	0.0 cm (0.0 in)

Shields			
Shield N	Dimension	Material	Density
Source	5.73e+07 cm³	Concrete	1.54
Air Gap		Air	0.00122

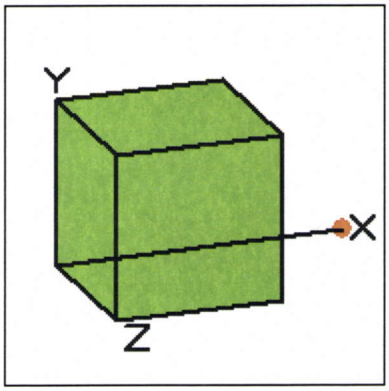

Source Input: Grouping Method - Standard Indices
Number of Groups: 25
Lower Energy Cutoff: 0.015
Photons < 0.015: Included
Library: Grove

Nuclide	Ci	Bq	µCi/cm³	Bq/cm³
Pa-234				
Pa-234m				
Th-231	5.7321e+001	2.1209e+012	1.0000e+000	3.7000e+004
Th-234				
U-234				
U-235	5.7321e+001	2.1209e+012	1.0000e+000	3.7000e+004
U-238				

Buildup: The material reference is Source
Integration Parameters

X Direction	20
Y Direction	20
Z Direction	20

Results

		Fluence Rate	Fluence Rate	Exposure Rate	Exposure Rate

Energy (MeV)	Activity (Photons/sec)	MeV/cm²/sec No Buildup	MeV/cm²/sec With Buildup	mR/hr No Buildup	mR/hr With Buildup
0.015	2.161e+12	5.564e-07	6.098e-07	4.772e-08	5.230e-08
0.03	3.108e+11	1.702e+00	2.335e+00	1.687e-02	2.314e-02
0.06	1.008e+10	1.289e+00	2.824e+00	2.560e-03	5.609e-03
0.08	2.488e+11	5.901e+01	1.558e+02	9.338e-02	2.466e-01
0.1	2.217e+11	7.762e+01	2.281e+02	1.188e-01	3.490e-01
0.15	3.303e+11	2.128e+02	6.711e+02	3.504e-01	1.105e+00
0.2	1.309e+12	1.263e+03	3.927e+03	2.229e+00	6.932e+00
Totals	**4.591e+12**	**1.615e+03**	**4.988e+03**	**2.811e+00**	**8.661e+00**

MicroShield 7.02
Westinghouse Electric Company (08-MSD-7.02-1424)

Date	By	Checked

Filename	Run Date	Run Time	Duration
Stabilization Operator.ms7	July 19, 2012	9:24:00 AM	00:00:01

Project Info	
Case Title	USEI Stab. Worker
Description	USEI SSPA, Density=1.54 g/cc
Geometry	13 - Rectangular Volume

Source Dimensions	
Length	385.572 cm (12 ft 7.8 in)
Width	385.572 cm (12 ft 7.8 in)
Height	385.572 cm (12 ft 7.8 in)

Dose Points			
A	X	Y	Z
#1	665.988 cm (21 ft 10.2 in)	0.0 cm (0.0 in)	0.0 cm (0.0 in)

Shields			
Shield N	Dimension	Material	Density
Source	5.73e+07 cm³	Concrete	1.54
Air Gap		Air	0.00122

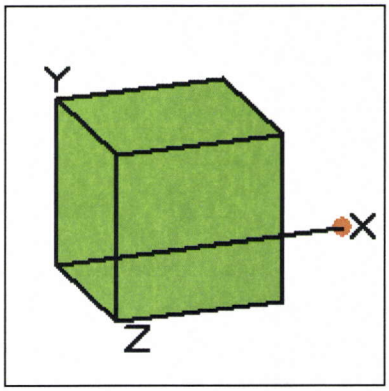

Source Input: Grouping Method - Standard Indices
Number of Groups: 25
Lower Energy Cutoff: 0.015
Photons < 0.015: Included
Library: Grove

Nuclide	Ci	Bq	µCi/cm³	Bq/cm³
Pa-234	9.1714e-002	3.3934e+009	1.6000e-003	5.9200e+001
Pa-234m	5.7321e+001	2.1209e+012	1.0000e+000	3.7000e+004
Th-231				
Th-234	5.7321e+001	2.1209e+012	1.0000e+000	3.7000e+004
U-234				
U-235				
U-238	5.7321e+001	2.1209e+012	1.0000e+000	3.7000e+004

Buildup: The material reference is Source Integration Parameters	
X Direction	20
Y Direction	20
Z Direction	20

Results

		Fluence Rate	Fluence Rate	Exposure Rate	Exposure Rate

Energy (MeV)	Activity (Photons/sec)	MeV/cm²/sec No Buildup	MeV/cm²/sec With Buildup	mR/hr No Buildup	mR/hr With Buildup
0.015	4.047e+11	1.042e-07	1.142e-07	8.939e-09	9.797e-09
0.04	4.154e+06	1.417e-04	2.289e-04	6.266e-07	1.012e-06
0.06	8.302e+10	1.062e+01	2.326e+01	2.109e-02	4.620e-02
0.08	3.015e+09	7.151e-01	1.889e+00	1.132e-03	2.989e-03
0.1	1.302e+11	4.559e+01	1.340e+02	6.974e-02	2.050e-01
0.15	1.070e+09	6.892e-01	2.174e+00	1.135e-03	3.580e-03
0.2	7.158e+08	6.907e-01	2.148e+00	1.219e-03	3.791e-03
0.3	2.464e+08	4.181e-01	1.209e+00	7.930e-04	2.293e-03
0.4	2.084e+08	5.299e-01	1.428e+00	1.032e-03	2.781e-03
0.5	3.094e+08	1.082e+00	2.749e+00	2.123e-03	5.397e-03
0.6	1.264e+09	5.747e+00	1.387e+01	1.122e-02	2.708e-02
0.8	7.041e+09	4.873e+01	1.089e+02	9.269e-02	2.071e-01
1.0	2.251e+10	2.170e+02	4.580e+02	4.000e-01	8.443e-01
1.5	4.749e+08	8.443e+00	1.616e+01	1.420e-02	2.719e-02
2.0	6.126e+07	1.684e+00	3.044e+00	2.605e-03	4.707e-03
Totals	**6.548e+11**	**3.420e+02**	**7.688e+02**	**6.190e-01**	**1.382e+00**