WORKSHEET INFORMATION

Facility:	Shearon Harris	Task No.:	301135H601
Task Title:	Determine Subcooling with the Subcooling Margin Monitor Unavailable	JPM No.:	2012 NRC Exam Admin JPM RO/SRO A1-2
K/A Reference:	G 2.1.23 RO 4.3 SRO 4.4	**Alternate path: No**	

Examinee: _____ NRC Examiner: _____

Facility Evaluator: _____ Date: _____

Method of testing:

Simulated Performance: _____ Actual Performance: X

Classroom X Simulator _____ Plant _____

READ TO THE EXAMINEE

I will explain the initial conditions, which steps to simulate or discuss, and provide initiating cues. When you complete the task successfully, the objective for this Job Performance Measure will be satisfied.

Initial Conditions:	• A Small Break LOCA has occurred • SI is actuated • PATH-1 is in progress • Containment pressure is 3.9 psig and slowly increasing • All RCP's are running • The Subcooling Margin Monitor is not available • Core Exit Thermocouples are reading as follows: L06 = 556°F E10 = 557°F K11 = 558°F F05 = 556°F F11 = 557°F • ERFIS Pt. TRC9300 is not available • Loop Thot's are reading as follows: TI-413 = 552°F TI-433 = 553°F TI-423 = 551°F • ERFIS Point PRC9455L has failed • Pressurizer Pressure Channels are reading as follows: PI-457 = 1730 psig PI-455 = 1720 psig PI-456 = 1710 psig • RCS Wide Range Pressure Channels are reading as follows: PI-402 = 1680 psig PI-403 = 1690 psig

Initiating Cue:	The CRS has directed you to determine and report the Subcooling margin. Show your work in the box provided.

Task Standard: Correct indications utilized and Subcooling margin determined within specified range.

Required Materials:
- Calculator
- Steam Tables

General References: EOP USER'S GUIDE Rev. 36

Handouts:
- None

Time Critical Task: No

Validation Time: 10 minutes

	Critical Task Justification
Step 2	Must choose correct temperature to use based on provided plant conditions. IF the wrong temperature is selected all calculations will be incorrect.
Step 3	IF Containment pressure is not identified as ADVERSE then all calculations will be using the normal Containment values and the calculations will be incorrect.
Step 4	IF the saturation temperature were incorrectly calculated the final calculation will be incorrect.
Step 5	Final Subcooling calculation is what the candidate's task was. If the reported values are incorrect the CRS may make incorrect choices with procedure steps based on the value given.

Start Time: _____

Performance Step: 1 Refers to EOP User's Guide.

Comment: **The candidate is not required to complete the task in discrete steps. Guidance for performing the task is provided in the EOP USER's GUIDE but procedure steps are not specified. The specified parameters must be selected for the subcooling calculation to be correct.**

√ **Performance Step: 2** Evaluate plant conditions:

- RCS temperature

Standard: EOP Users Guide Section 6.2 Step 1

IF the Core exit TC reading on SPDS is not available then the Highest core exit TC reading from the Inadequate Core Cooling Monitor (ICCM) should be used:

Determines the hottest CET reading is the preference and chooses:

- 558°F

Comment:

√ **Performance Step: 3** Evaluate plant conditions:

- RCS Pressure

Standard: EOP Users Guide Section 6.2 Step 2

Primary pressure is obtained using the lowest of the two RCS wide-range pressure indications PI-402.1 or PI-403 when PRZ pressure is off scale low or adverse CNMT conditions exist (given CNMT pressure of 3.9 psig indicates adverse conditions)

Determines containment conditions are adverse:

- PI-402 = 1680 PSIG

Comment:

√ **Performance Step: 4** Determine saturation temperature.

Standard: Convert to PSIA: 1680 + 15 = 1695 PSIA

Interpolates between 1660 and 1700 PSIA and determines saturation temperature to be ≥ 610°F but ≤ 611°F:

- [35/40(613.189 – 609.934)] = 3.255
- 609.934 + 3.255 = **612.782°F**
- **≥ 612°F ≤ 613°F**

Comment: **Candidate can use the Steam Tables.**

√ **Performance Step: 5** Determine subcooling.

Standard: Calculates and reports subcooling to be ≥ 54°F but ≤ 55°F

- 612.782°F - 558°F = **54.782°**
- **≥ 54°F ≤55°F**

Comment:

Terminating Cue:	**After the candidate has reported the calculated Subcooling margin:** **Evaluation on this JPM is complete.**

Stop Time: _____

VERIFICATION OF COMPLETION

Job Performance Measure No.: 2012 NRC Admin Exam JPM RO / SRO A1-2
Determine Subcooling with the Subcooling Margin Monitor Unavailable
EOP Users Guide, Section 6.2, Subcooling

Examinee's Name:

Date Performed:

Facility Evaluator:

Number of Attempts:

Time to Complete:

Question Documentation:

Question:

Response:

Result: SAT _____ UNSAT _____

Examiner's Signature: _____ Date: _____

Name: _____

Date: _____

Initial Conditions:	• A Small Break LOCA has occurred • SI is actuated • PATH-1 is in progress • Containment pressure is 3.9 psig and slowly increasing • All RCP's are running • The Subcooling Margin Monitor is not available • Core Exit Thermocouples are reading as follows: L06 = 556°F E10 = 557°F K11 = 558°F F05 = 556°F F11 = 557°F • ERFIS Pt. TRC9300 is not available • Loop Thot's are reading as follows: TI-413 = 552°F TI-433 = 553°F TI-423 = 551°F • ERFIS Point PRC9455L has failed • Pressurizer Pressure Channels are reading as follows: PI-457 = 1730 psig PI-455 = 1720 psig PI-456 = 1710 psig • RCS Wide Range Pressure Channels are reading as follows: PI-402 = 1680 psig PI-403 = 1690 psig

Initiating Cue:	The CRS has directed you to determine and report the Subcooling margin. (Show work below)

Subcooling margin = _____ °F

WORKSHEET

Facility: Shearon Harris Task No.:

Task Title: Using Valve Maps And Survey Maps Determine Stay Times For A Clearance JPM No.: 2012 NRC Exam Admin JPM SRO A-3

K/A Reference: G.2.3.4 RO 3.2 SRO 3.7

Examinee: _____ NRC Examiner: _____

Facility Evaluator: _____ Date: _____

Method of testing:

Simulated Performance: _____ Actual Performance: X

Classroom X Simulator _____ Plant _____

READ TO THE EXAMINEE

I will explain the initial conditions, which steps to simulate or discuss, and provide initiating cues. When you complete the task successfully, the objective for this Job Performance Measure will be satisfied.

Initial Conditions:	A plant shutdown IAW GP-006, Normal Plant Shutdown From Power Operation To Hot Standby (MODE 1 TO MODE 3) is in progress due to a fuel leak causing elevated RCS radiation readings. The Letdown demins are currently bypassed and unavailable. 1CS-167, VCT Outlet Check Valve gasket failed causing a body to bonnet leak that must be repaired for continued use of the VCT. Two operators are tasked to hang a clearance on 1CS-167. The clearance includes the following valves: • 1CS-165, VCT OUTLET LCV-115C • 1CS-166, VCT OUTLET LCV-115E • 1CS-272, Chem Mixing Tank Outlet Isolation Valve • 1CS-321, Seal Water Return Isolation Valve to CSIP Suction • 1CS-793, ECCS Inner Vent Valve VCT Discharge Downstream 1CS-167 • 1CS-794, ECCS Outer Vent Valve VCT Discharge Downstream 1CS-167 Operator 1 has an accumulated annual Whole Body dose of 1560 mrem (Progress Energy). Operator 2 has an accumulated annual Whole Body dose of 1630 mrem (Progress Energy) and worked at LaSalle Nuclear Plant earlier this year where he has accumulated 2170 mrem. The ALARA group has determined that additional shielding is not warranted for this work.

(Initiating Cue on next page)

Initiating Cue:	Using the supplied valve maps and survey map, determine the maximum allowable individual stay times for each Operator that would prevent exceeding the Progress Energy Annual Administrative dose limit while performing the clearance. Do not consider dose received during transit. The calculated dose should be ONLY what they would receive while working at the valves for the clearance. Individual stay times for each Operator that would prevent exceeding the Progress Energy Annual Administrative dose limit while performing these activities. Complete the information below and return to the evaluator when complete.

Task Standard: Calculation of stay times based on survey maps, 2 hours and 45 minutes for Operator 1, 1 hour and 15 minutes for Operator 2.

Required Materials: Survey map A78
RAB 261' Volume Control Tank Valve Gallery Map 23

General References: DOS-NGGC-0004 "Progress Energy Annual Administrative Dose Limits" Section 9.3 (Rev.12)
LIMIT = 2 rem Progress Energy dose not to exceed 4 rem total dose if non- Progress Energy dose for the current year has been determined.

Time Critical Task: No

Validation Time: 15 minutes

Critical Task Justification	
Step 1	Must determine dose rates in order to calculate stay time
Step 2	Must determine available dose to determine stay time.
Step 3	IF incorrect calculation of stay time is made the individuals could exceed their dose limits.

START TIME: _____

Evaluator Note:	**The order of performance does not matter** **IF THE APPLICANT ASKS FOR IT: Provide a copy of DOS-NGGC-0004, Rev. 12**

✓ **Performance Step: 1** Using Radiological Survey Record Map A78 and RAB 261' Volume Control Tank Valve Gallery Map 23, determines dose rates in the area where the clearance will be applied

Standard: Identifies that General Area Dose Rates are 160 mrem/hr

Comment:

✓ **Performance Step: 2** Determine the remaining dose for the year for each individual

Standard: Operator 1: **440 mrem**
2000 mrem - 1560 mrem = 440 mrem

Operator 2: **200 mrem**
4000 mrem - 1630 mrem (PE) - 2170 mrem (LaSalle) = 200 mrem

Comment:

PERFORMANCE INFORMATION

✓ **Performance Step: 3** Determine stay time for each operator (based on 1st Operator reaching 2 Rem and the 2nd Operator reaching 4 Rem - for the year)

Standard: Operator 1: **2 hours and 45 minutes**

440 mrem ÷ 160 mrem/hr = 2.75 hrs (2 hours and 45 minutes)

Operator 2: 1 **hour and 15 minutes**

200 mrem ÷ 160 mrem/hr = 1.25 hrs (1 hour and 15 minutes)

Comment:

Terminating Cue:	**After the stay time has been calculated, this JPM is complete.** **END OF JPM**

STOP TIME: _____

VERIFICATION OF COMPLETION

Job Performance Measure No.: 2012 NRC Exam Admin JPM SRO A-3 - Using Valve Maps And Survey Maps Determine Stay Times For A Clearance

(DOS-NGGC-0004 Rev. 12)

Examinee's Name:

Date Performed:

Facility Evaluator:

Number of Attempts:

Time to Complete:

Question Documentation:

Question:

Response:

Result: SAT _____ UNSAT _____

Examiner's Signature: _____ Date: _____

JPM CUE SHEET

Name: _____

Date: _____

Initial Conditions:	A plant shutdown IAW GP-006, Normal Plant Shutdown From Power Operation To Hot Standby (MODE 1 TO MODE 3) is in progress due to a fuel leak causing elevated RCS radiation readings. The Letdown demins are currently bypassed and unavailable. 1CS-167, VCT Outlet Check Valve gasket failed causing a body to bonnet leak that must be repaired for continued use of the VCT. Two operators are tasked to hang a clearance on 1CS-167. The clearance includes the following valves: • 1CS-165, VCT OUTLET LCV-115C • 1CS-166, VCT OUTLET LCV-115E • 1CS-272, Chem Mixing Tank Outlet Isolation Valve • 1CS-321, Seal Water Return Isolation Valve to CSIP Suction • 1CS-793, ECCS Inner Vent Valve VCT Discharge Downstream 1CS-167 • 1CS-794, ECCS Outer Vent Valve VCT Discharge Downstream 1CS-167 Operator 1 has an accumulated annual Whole Body dose of 1560 mrem (Progress Energy). Operator 2 has an accumulated annual Whole Body dose of 1630 mrem (Progress Energy) and worked at LaSalle Nuclear Plant earlier this year where he has accumulated 2170 mrem. The ALARA group has determined that additional shielding is not warranted for this work.

Initiating Cue:	Using the supplied valve maps and survey map, determine the maximum allowable individual stay times for each Operator that would prevent exceeding the Progress Energy Annual Administrative dose limit while performing the clearance. Do not consider dose received during transit. The calculated dose should be ONLY what they would receive while working at the valves for the clearance. Individual stay times for each Operator that would prevent exceeding the Progress Energy Annual Administrative dose limit while performing these activities. Complete the information below and return to the evaluator when complete.

Record the maximum allowable stay time calculations below to the nearest hour and minute.

Operator 1: _____ Operator 2: _____

Map A78

RADIOLOGICAL SURVEY RECORD

Page 1 of 1

Unit 1	Bldg/Elev: RAB 261'	Area: VCT Valve Gallery	Date: 1-12-12	Time: 1201	RWP# 5859	Survey # 0501-007
Component: 1CS-167		Work Description: Valve Repairs			
Surveyor: Michael Guilly		Signature: Michael Guilly		Reviewed by: Ronald [illegible] 1-12-12	

Comments: N/A

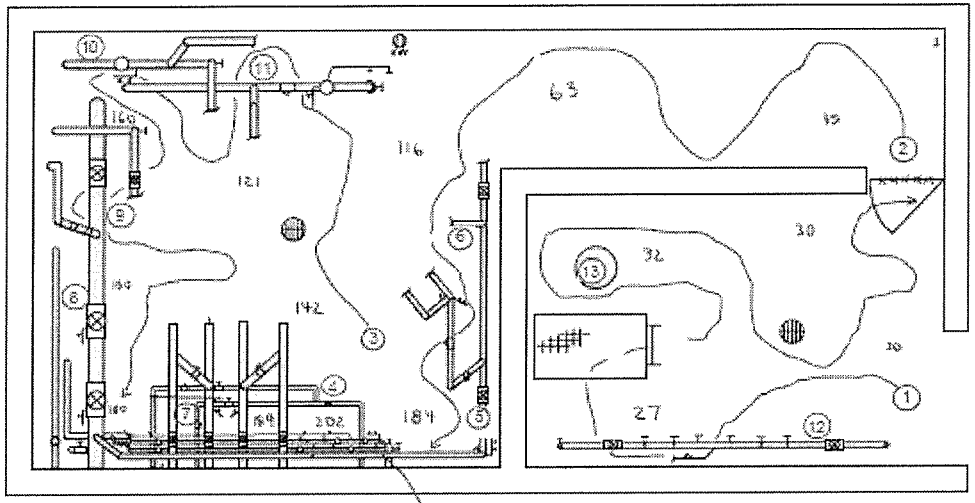

A-16

1250 */15

Line near 1CS-129

% Power 100

#	dpm/100cm²	Location
1-3	<1K/M	Floor
4-12	<1K	Valves/piping
13	↓	Mixing Tank
	N	
	A	

Instrument	Serial No./UTC
RO-2	778026
L-177	1219688
N	
A	

RA	Radiation Area	β	Beta Dose Rate
HRA	High Radiation Area	η	Neutron Dose Rate
LHRA	Locked HighRadiation Area	R	Rem/hour
VHRA	Very High Radiation Area	XXXX	Boundary
ARA	Airborne Radiation Area	○	Smear Location
CA	Contamination Area	△	Air Sample Location
RMA	Radioactive Materials Area	K	1000
Dose Rates in mrem/hr unless otherwise noted		M	Meter/hr

Air Activity

No. ____ DAC ✓ % Activity ____ uCi/cc

No. ____ DAC ____ % Activity ____ uCi/cc

No. ____ DAC ____ % Activity ____ uCi/cc

QA Record

JPM CUE SHEET

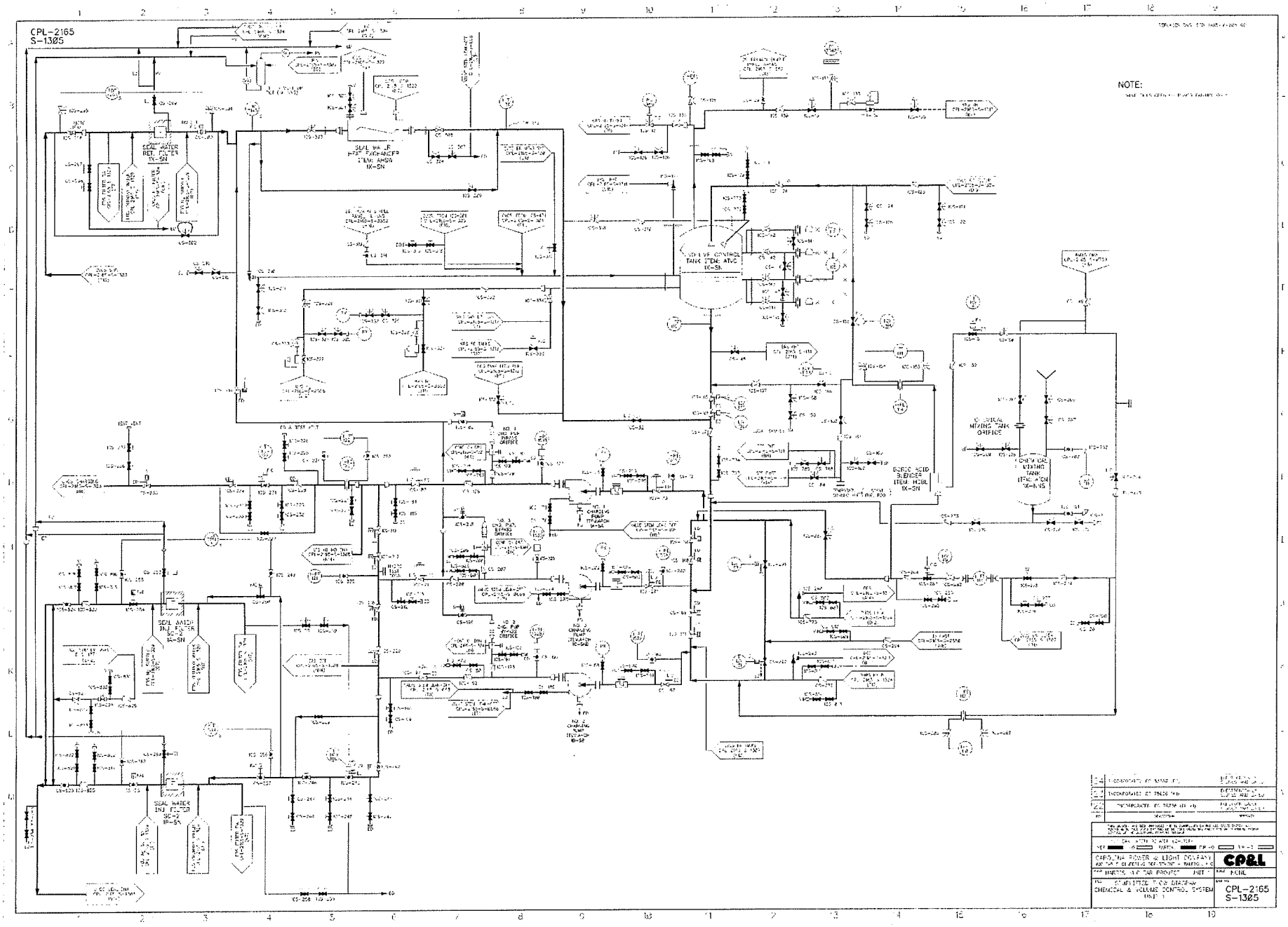

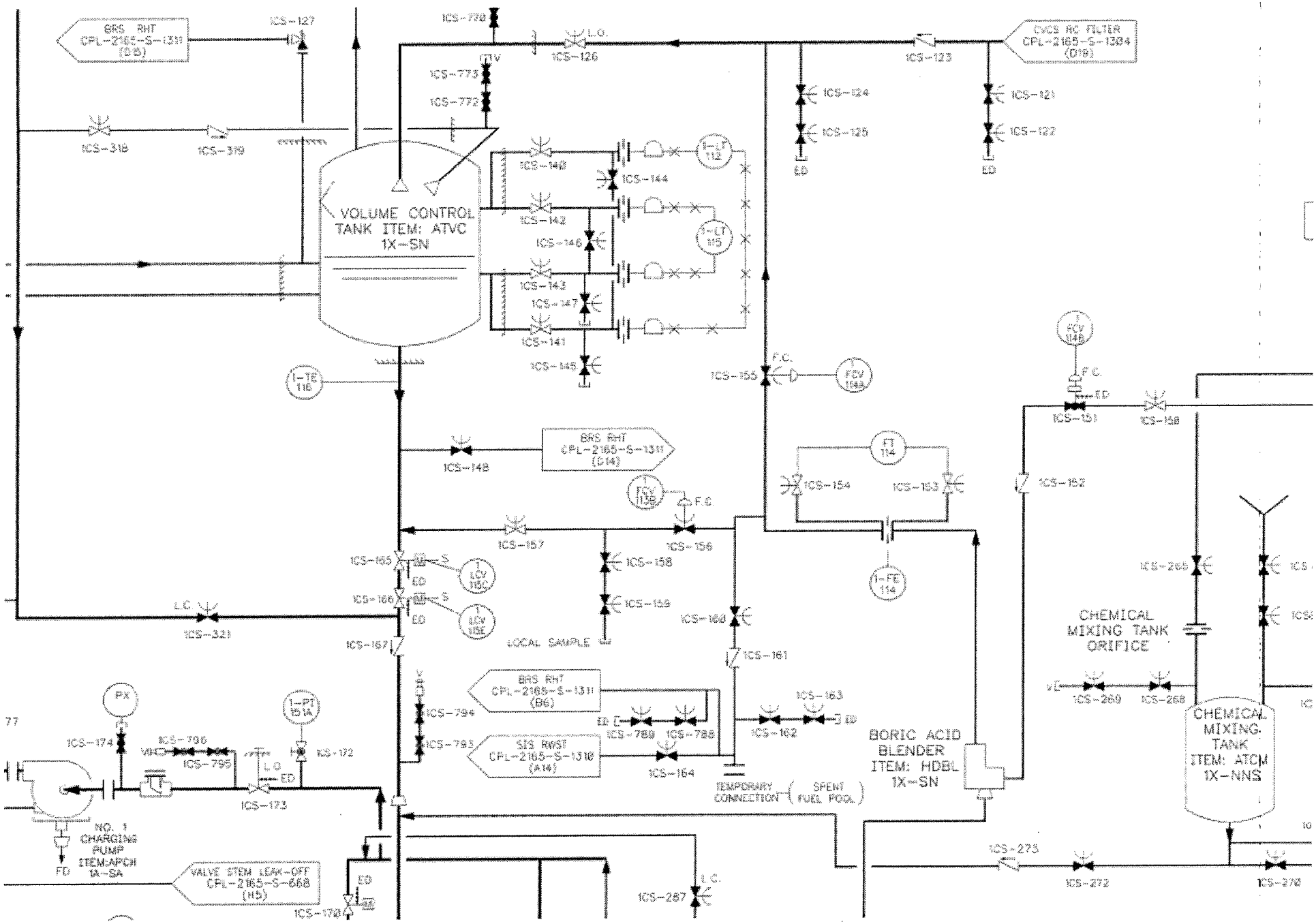
BRS RHT
CPL-2165-S-1311
(D15)
ICS-127
ICS-778
L.O.
ICS-126
CVCS RC FILTER
CPL-2165-S-1304
(D19)
ICS-123
ICS-773
ICS-772
ICS-319
ICS-319
ICS-124
ICS-125
ICS-121
ICS-122
ED
ED
VOLUME CONTROL
TANK ITEM: ATVC
1X-SN
ICS-140
ICS-144
ICS-142
ICS-146
ICS-143
ICS-147
ICS-141
ICS-145
1-LT
112
1-LT
115
1-TE
116
ICS-155
F.C.
FCV
114B
FCV
114A
F.C.
ICS-151
ICS-158
ICS-148
BRS RHT
CPL-2165-S-1311
(D14)
FT
114
ICS-154
ICS-153
ICS-152
FCV
115B
F.C.
ICS-157
ICS-156
ICS-165
ICS-166
LCV
115C
LCV
115E
ICS-158
ICS-159
1-FE
114
ICS-160
ICS-268
L.C.
ICS-321
ICS-167
LOCAL SAMPLE
ICS-161
CHEMICAL
MIXING TANK
ORIFICE
BRS RHT
CPL-2165-S-1311
(B6)
ICS-163
ICS-269
ICS-268
PX
1-PT
151A
ICS-794
ICS-174
ICS-796
ICS-795
ICS-172
ICS-793
ICS-789
ICS-788
ICS-162
SIS RWST
CPL-2165-S-1310
(A14)
ICS-164
BORIC ACID
BLENDER
ITEM: HDBL
1X-SN
CHEMICAL
MIXING
TANK
ITEM: ATCM
1X-NNS
ICS-173
TEMPORARY CONNECTION
SPENT FUEL POOL
NO. 1
CHARGING
PUMP
ITEM:APCH
1A-SA
VALVE STEM LEAK-OFF
CPL-2165-S-668
(H5)
ICS-170
ICS-267
ICS-275
ICS-272
ICS-270

Facility:	Shearon Harris	Task No.:	015004H201
Task Title:	Perform the Quadrant Power Tilt Ratio Surveillance	JPM No.:	2012 NRC Exam Admin JPM SRO A2
K/A Reference:	G2.2.12 RO 3.7 SRO 4.1	**Alternate Path: No**	

Examinee: _____ NRC Examiner: _____

Facility Evaluator: _____ Date: _____

Method of testing:

Simulated Performance: _____ Actual Performance: X

Classroom X Simulator _____ Plant _____

READ TO THE EXAMINEE

I will explain the initial conditions, which steps to simulate or discuss, and provide initiating cues. When you complete the task successfully, the objective for this Job Performance Measure will be satisfied.

Initial Conditions:	• The plant is operating at 100% power when a rod in Control Bank "B" (M-6) dropped. • The crew is performing AOP-001, MALFUNCTION OF ROD CONTROL AND INDICATION SYSTEM. • There are NO deficiency tags on PR NIs.

Initiating Cue:	The CRS has directed you to perform a manual QPTR IAW OST-1039, CALCULATION OF QPTR. The Power Range NIS readings are provided in the table below. **For the purposes of the examination, there will be no independent verification. Show values of your work.**

PR NIS Readings*

PRNIS Channel	UPPER READING	LOWER READING
N41	115.7	128.3
N42	125.3	151.2
N43	144.8	160.9
N44	120.8	137.1

* All values were taken with the Range/Rate switch in 400 μA/Slow position.

Task Standard: Calculations within required band.
Correct Tech Spec actions are identified.

Required Materials: Calculator

General References: OST-1039, CALCULATION OF QPTR, Revision 15
Technical Specifications

Handouts:

- OST-1039
- Power Range NI – Current and Voltage Set point Table
- Technical Specifications

Time Critical Task: No

Validation Time: 15 minutes

Critical Step Justification	
Step 11	Must accurately determine the correct calculation based on collecting and inputting either provided data or visual inspection data. The calculation will yield an unsatisfactory QPTR.
Step 14	Must identify that the QPTR upper is outside the band which will make this overall results unsatisfactory.
Step 15	Must unsatisfactory that the QPTR is greater than 1.02 (which is a Tech Spec limit).
Step 16	Must correctly identify through documentation that the QPTR limits are exceeded.
Step 17	Must accurately identify associated Tech Specs with a QPTR that has exceeded the limits specified in HNP Tech Specs.

Start Time: _____.

Performance Step: 1 Obtain procedure.

Standard: Reviews procedure.

Evaluator Cue:	**Provide OST-1039.**

Evaluator Note: **A KEY is provided for your use on JPM prior to candidate pages.**

Comment:

Evaluator Note:	**NOTE: The NI curve numbers provided in this JPM are numbers made specifically for use in this JPM they are NOT current plant values.**

Procedure Note: Precaution and Limitation 4.0.1 has guidance if performing this OST with one Power Range Channel inoperable.

Performance Step: 2 Completes Prerequisites section:

- Verify instrumentation needed for the performance of this test is free of deficiencies that affect instrument indication.
- Verify the most recent Curve F-X-8 is used in the performance of this procedure. (Reference 2.1.1 and 2.1.2)
- OBTAIN CRS permission to perform this OST.

Standard:

- Logs F-X-8 revision number : 9
- Initials/signs all blocks

Comment:

Performance Step: 3

- IF Quadrant Power Tilt Ratio Calculation Computer Program is used, THEN PERFORM the following:
  - MARK Step 7.0.2 N/A.
  - MARK Section 7.2 N/A.
  - PERFORM Section 7.1.
- IF manual calculation of the Quadrant Power Tilt Ratio is used, THEN PERFORM the following:
  - MARK Section 7.1 N/A.
  - PERFORM Section 7.2.

Standard:

- Marks Section 7.1 N/A
- Proceeds to Section 7.2

Comment:

OST-1039 Section 7.2 Note prior to step 1

Performance Step: 4

NOTE: The detector current meters on each power range channel drawer are designated as left-upper, right-lower.

Standard:

Reads and circle slashes note

Comment:

OST-1039 Section 7.2, Step 1

Performance Step: 5

Prior to reading the value of detector current, VERIFY the meter range/rate switch is in the 400 μA/SLOW position.

Standard:

Prior to reading the value of detector current, VERIFIES the Meter Range/Rate switch is in the 400 μA/SLOW position.

Evaluator Note:	**This information is on the JPM Cue Sheet**

Comment:

OST-1039 Section 7.2, Step 2

Performance Step: 6 RECORD on Attachment 2, in column A, the upper and lower detector currents from all operable power range channels as read on the Nuclear Instrumentation Cabinet.

Standard: Transposes readings from PR NIS Readings Table onto Attachment 2.

Comment:

OST-1039 Section 7.2, Step 3

√ **Performance Step: 7** RECORD on Attachment 2, in column B, the 100% power normalized current for each channel from Curve F-x-8.

Standard: Transposes TOP and BOTTOM 100% current values from the Curve Book provided.

Comment:

OST-1039 Section 7.2, Note prior to Step 4

Performance Step: 8 NOTE: When recording all fractions and ratios, record to four decimal places, dropping the fifth and subsequent decimal places.

Standard: Reads and circle slashes note

Comment:

OST-1039 Section 7.2, Step 4

Performance Step: 9 Divide values in Column A by the respective normalized current in Column B and record the result in Column C as the Normalized Fraction.

Standard: Divides each Upper and Lower reading by the respective 100% normalized current value and records in Column C.

Comment:

OST-1039 Section 7.2, Step 5

Performance Step: 10

CALCULATE the average value for the upper and the lower Normalized Fractions as follows:

- ADD the Normalized Fraction in each section of column C, recording the sum in the space provided.
- DIVIDE the sum obtained in Step 7.2.5.a by the number of operable NI channels, recording the result in column D of Attachment 2.

Standard:

Adds all Normalized Fractions for the same plane and records the sum in the space provided.

Divides by the sum by four and records result in Column D.

Comment:

OST-1039 Section 7.2, Step 6

√ **Performance Step: 11**

Using the formula and values from Attachment 2, CALCULATE the Upper and Lower Ratios.

Standard:

- Divides the Maximum Normalized Fraction by the Average Normalized Fraction on each plane.
- Determines the UPPER ratio is ≥ 1.02

Evaluator Note:	**The applicant may inform the CRS as soon as any calculation is > 1.02. If so, acknowledge and direct applicant to complete Attachment 2.**

Comment:

OST-1039 Section 7.2, Step 7

Performance Step: 12

PERFORM independent verification of all calculations made on Attachment 2.

Standard:

Requests Independent Verifier.

Evaluator Cue:

If necessary, repeat Initiating Cue: For the purpose of this examination, there will be no independent verification of your work.

Comment:

Candidate may choose to check calculations.

OST-1039 Section 7.2, Note prior to Step 8

Performance Step: 13 NOTE: The upper ratio or the lower ratio, whichever is greater, is the quadrant power tilt ratio (QPTR).

Standard: Reads and circle slashes note

Comment:

OST-1039 Section 7.2, Step 8

√ **Performance Step: 14** RECORD QPTR:

Standard: Records QPTR value as 1.0405 (N44 UPPER)
Identifies Upper as outside the band

Comment: **Acceptable band is +/- 5% (rounded to .0005).**
UPPER calculated band is 1.0400 to 1.0410
LOWER calculated band is 1.0155 to 1.0165

OST-1039 Section 7.2, Step 9

√ **Performance Step: 15** CHECK QPTR is less than or equal to 1.02.

Standard: **Identifies Upper QPTR as greater than 1.02 and QPTR is unacceptable**

Comment:

OST-1039 Section 7.3, Test Completion Step 1

√ **Performance Step: 16**

- IF this test was performed due to an inoperable QPTR alarm, THEN DOCUMENT completion of PMID 22125 RQ 01.
- COMPLETE applicable sections of Attachment 3, Certifications and Reviews.
- INFORM the CRS this test is completed.

Standard:

- Check marks Periodic Surveillance or notes AOP-001 in Comments section
- Plant Condition: 75% Power (may note dropped rod)
- Mode 1
- Today's Date
- Current Time
- OST Completed By: Applicant's name
- Initials/Name
- √ Indicate in General Comments Section and/or informs CRS that the limit is exceeded

Evaluator Cue:

Acknowledge any report.

If examinee identifies that QPTR is greater than 1.02, direct the examinee to identify:

(1) which Tech Spec is exceeded

(2) the required action statements to be implemented

(3) the time requirement associated with each applicable action statement.

(4) what the required power level reduction is due to the QPTR being > 1.02

Comment:

√ **Performance Step: 17** Identify the Tech Spec LCOs that would be in effect.

Standard: Identifies that Tech Spec 3.2.4, Quadrant Power Tilt Ratio has been exceeded

- Identifies the following ACTION statements to be implemented and the required time limitation (see page 11)
  - 3.2.4.a.1 1 hour
  - 3.2.4.a.2 2 hours, reduce thermal power to ≤88%
    - (4% x 3% = 12% 100% - 12% = 88%)
  - 3.2.4.a.3 24 hours

Evaluator Note:	TS 3.2.4.a.4 is not required to be identified since no direction is provided in the cue for increasing thermal power.

Comment:

Terminating Cue:	**After the CRS has been notified:** **Evaluation on this JPM is complete.**

STOP Time: _____.

KEY

Record QPTR = **1.0405** Acceptable band is +/- 5% (rounded to .0005) 1.0400 to 1.0410

CHECK QPTR is less than or equal to 1.02 (circle) YES / **NO**

UPPER DETECTOR	A UPPER DETECTOR CURRENT	B UPPER 100% POWER NORMALIZED CURRENT	C UPPER NORMALIZED FRACTION (NOTE 1)	D AVERAGE UPPER NORMALIZED FRACTION
N-41	115.7	152.9	0.7567	0.7543
N-42	125.3	172.7	0.7255	
N-43	144.8	193.0	0.7502	
N-44	120.8	153.9	0.7849	
		SUM	3.0173	

$$\text{Upper Ratio} = \frac{\text{Maximum Upper Normalized Fraction}}{\text{Average Upper Normalized Fraction}} = \frac{0.7849}{0.7543} = 1.0405^{*}$$

* Standard for this calculation is 1.0400 to 1.0410

LOWER DETECTOR	A LOWER DETECTOR CURRENT	B LOWER 100% POWER NORMALIZED CURRENT	C LOWER NORMALIZED FRACTION (NOTE 1)	D AVERAGE LOWER NORMALIZED FRACTION
N-41	128.3	174.1	0.7369	0.7425
N-42	151.2	200.4	0.7544	
N-43	160.9	214.7	0.7494	
N-44	137.1	187.9	0.7296	
		SUM	2.9703	

$$\text{Lower Ratio} = \frac{\text{Maximum Lower Normalized Fraction}}{\text{Average Lower Normalized Fraction}} = \frac{0.7544}{0.7425} = 1.0160^{**}$$

** Standard for this calculation is 1.0155 to 1.0165

✓ - Denotes Critical Steps

POWER DISTRIBUTION LIMITS

3/4.2.4 QUADRANT POWER TILT RATIO

LIMITING CONDITION FOR OPERATION

3.2.4 The QUADRANT POWER TILT RATIO shall not exceed 1.02.

APPLICABILITY: MODE 1, above 50% of RATED THERMAL POWER*.

ACTION:

a. With the QUADRANT POWER TILT RATIO determined to exceed 1.02 but less than or equal to 1.09:

1. Calculate the QUADRANT POWER TILT RATIO at least once per hour until either:

a) The QUADRANT POWER TILT RATIO is reduced to within its limit, or

b) THERMAL POWER is reduced to less than 50% of RATED THERMAL POWER.

2. Within 2 hours either:

a) Reduce the QUADRANT POWER TILT RATIO to within its limit, or

b) Reduce THERMAL POWER at least 3% from RATED THERMAL POWER for each 1% of indicated QUADRANT POWER TILT RATIO in excess of 1 and similarly reduce the Power Range Neutron Flux-High Trip Setpoints within the next 4 hours.

3. Verify that the QUADRANT POWER TILT RATIO is within its limit within 24 hours after exceeding the limit or reduce THERMAL POWER to less than 50% of RATED THERMAL POWER within the next 2 hours and reduce the Power Range Neutron Flux-High Trip Setpoints to less than or equal to 55% of RATED THERMAL POWER within the next 4 hours; and

4. Identify and correct the cause of the out-of-limit condition prior to increasing THERMAL POWER; subsequent POWER OPERATION above 50% of RATED THERMAL POWER may proceed provided that the QUADRANT POWER TILT RATIO is verified within its limit at least once per hour for 12 hours or until verified acceptable at 95% or greater RATED THERMAL POWER.

*See Special Test Exceptions Specification 3.10.2.

VERIFICATION OF COMPLETION

Job Performance Measure No.: 2012 NRC Exam Admin JPM SRO A2
Perform a Quadrant Power Tilt Ratio Surveillance

Examinee's Name:

Date Performed:

Facility Evaluator:

Number of Attempts:

Time to Complete:

Question Documentation:

Question:

Response:

Result: SAT _____ UNSAT _____

Examiner's Signature: _____ Date: _____

Name: _____

Date: _____

Initial Conditions:	• The plant is operating at 100% power when a rod in Control Bank "B" (M-6) dropped. • The crew is performing AOP-001, MALFUNCTION OF ROD CONTROL AND INDICATION SYSTEM. • There are NO deficiency tags on PR NIs.

Initiating Cue:	The CRS has directed you to perform a manual QPTR IAW OST-1039, CALCULATION OF QPTR. The Power Range NIS readings are provided in the table below. **For the purposes of the examination, there will be no independent verification. Show values of your work.**

PR NIS Readings*

PRNIS Channel	UPPER READING	LOWER READING
N41	115.7	128.3
N42	125.3	151.2
N43	144.8	160.9
N44	120.8	137.1

* All values were taken with the Range/Rate switch in 400 μA/Slow position.

Current and Voltage Setpoints Table
(100% Power, 0% Incore Axial Offset)

Channel #	Top Current (μA)	Bottom Current (μA)
N41	152.9	174.1
N42	172.7	200.4
N43	193.0	214.7
N44	153.9	187.9

Curve No.	F-17-8	Rev. 9

Facility:	Shearon-Harris	Task No.:	345001H602
Task Title:	Classify an EAL and Determine a PAR	JPM No.:	2012 NRC Exam Admin JPM SRO A4
K/A Reference:	G2.4.41 RO 2.9 SRO 4.6		

Examinee: _____ NRC Examiner: _____

Facility Evaluator: _____ Date: _____

Method of testing: **This JPM can be performed in any setting with the required references available.**

Simulated Performance: _____ Actual Performance: X

Classroom X Simulator _____ Plant _____

READ TO THE EXAMINEE

I will explain the initial conditions, which steps to simulate or discuss, and provide initiating cues. When you complete the task successfully, the objective for this Job Performance Measure will be satisfied.

Initial Conditions:	You are the Site Emergency Coordinator. - The Reactor is tripped and Safety Injection is actuated - The 'A' SUT transfer locked out during the fast bus transfer - The 'A' EDG failed to start - The crew is implementing PATH-1 - RCPs are secured At 0351 the 'B' CSIP trips on overcurrent At 0403 the following conditions exist: - CSFST Core Cooling is RED - Core Exit TCs are 735°F - RCS Pressure is 1200 psig - RVLIS Full Range Level is 36% The time is now 0419: - Core Exit TCs are 743°F and rising - RVLIS Full Range Level is 33% and lowering

Initiating Cue:	Evaluate the EAL Matrix and determine the highest classification required for these plant conditions. **This is a time critical JPM.**

Evaluators Note:	**This is a two (2) part TIME CRITICAL JPM where each part will be timed separately.**

Task Standard: Classify the highest EAL as a GE and correctly identify the PAR

Required Materials: None

General References: PEP-110 EAL Matrix
PEP 110
EP-EAL (allowed reference)

Handouts:

- Attached Initial Conditions
- PEP 110
- PEP-110 EAL Matrix
- EP-EAL

Time Critical Task: YES – 15 minutes for classification. 15 minutes for PAR.

Validation Time: 30 minutes (accounts for 15 minute criteria for classification and PAR)

CRITICAL TASK JUSTIFICATION	
Step 1	Classification of the event is critical for determining State and County notifications, public information notices, site information notices, and event reportability to the Nuclear Regulatory Commission.
Step 2	Identification of protective recommendation to the State and County is part of the standard goal of protecting the health and safety of the public.

Evaluator Cue:	**Start Time for this portion of JPM begins when the individual has been briefed.**

START TIME: _____

✓ **Performance Step: 1** Identify EAL Classification for events in progress.

Standard : The correct EAL is: **General Emergency FG1.1**

The time required to make the classification by is:
0419 + 15 minutes= **0434**

The Fuel is determined to be LOSS based on CSFST Core Cooling RED

The RCS is determined to be LOSS based on RCS leak rate > ECCS capability due to the loss of subcooling

The CNMT is determined to be POTENTIAL LOSS based on FRP-C.1 Entry met (>730°F with RVLIS < 39%) and FRP-C.1 is not effective within 15 minutes. 16 minutes since FRP-C.1 Entry met and TCs still going up/RVLIS still going down.

Comments:

STOP TIME: _____

Terminating Cue:	**EAL classification(s) completed and provided to evaluator.**

Evaluator Cue:	**DO NOT ASK THE CANDIDATE FOR A PAR UNLESS A GENERAL EMERGENCY HAS BEEN DECLARED.** **IF the candidate has determined that a General Emergency is declared then CUE:** **Make a protective action recommendation (PAR) based on the wind blowing from 130°.** **Start Time for this portion of JPM begins when the individual has been provided the directions to make a PAR and given the wind direction.**

START TIME: _____

✓ **Performance Step: 2** Determine PAR. Refers to PEP-110 Attachment 3.

Time of PAR determination: _____

Standard: PROTECTIVE ACTION RECOMMENDATION:

- Evacuate 2 Mile Radius & 5 Miles downwind. Shelter all other subzones
- EVACUATE Subzones: **A, B, L**
- SHELTER Subzones: **C, D, E, F, G, H, I, J, K, M, N**

PAR is determined ≤ 15 minutes from time of classification.

Comment:

Terminating Cue:	**After the PAR is specified: This JPM is complete.**

STOP TIME: _____

VERIFICATION OF COMPLETION

Job Performance Measure No.: 2012 NRC Exam Admin JPM SRO A4
Classify an Event and Identify PAR's

Examinee's Name:

Date Performed:

Facility Evaluator:

Number of Attempts:

Time to Complete:

Question Documentation:

Question:

Response:

Result: SAT _____ UNSAT _____

Examiner's Signature: _____ Date: _____

JPM CUE SHEET

Name: _____

Date: _____

Initial Conditions:	You are the Site Emergency Coordinator. - The Reactor is tripped and Safety Injection is actuated - The 'A' SUT transfer locked out during the fast bus transfer - The 'A' EDG failed to start - The crew is implementing PATH-1 - RCPs are secured At 0351 the 'B' CSIP trips on overcurrent At 0403 the following conditions exist: - CSFST Core Cooling is RED - Core Exit TCs are 735°F - RCS Pressure is 1200 psig - RVLIS Full Range Level is 36% The time is now 0419: - Core Exit TCs are 743°F and rising - RVLIS Full Range Level is 33% and lowering

Initiating Cue:	Evaluate the EAL Matrix and determine the classification(s) required for these plant conditions. **This is a time critical JPM.**

EAL Classification AND Time that classification is required to be declared by:

EAL: _____

Time required to be declared by: _____

_____

_____

Facility:	Shearon Harris	Task No.:	015004H201
Task Title:	Perform the Quadrant Power Tilt Ratio Surveillance	JPM No.:	2012 NRC Exam Admin JPM RO A2
K/A Reference:	G2.2.12 RO 3.7 SRO 4.1	**Alternate Path:**	**No**

Examinee: _____ NRC Examiner: _____

Facility Evaluator: _____ Date: _____

Method of testing:

Simulated Performance: _____ Actual Performance: X

Classroom X Simulator _____ Plant _____

READ TO THE EXAMINEE

I will explain the initial conditions, which steps to simulate or discuss, and provide initiating cues. When you complete the task successfully, the objective for this Job Performance Measure will be satisfied.

Initial Conditions:	• The plant is operating at 100% power when a rod in Control Bank "B" (M-6) dropped. • The crew is performing AOP-001, MALFUNCTION OF ROD CONTROL AND INDICATION SYSTEM. There are NO deficiency tags on PR Nis

Initiating Cue:	The CRS has directed you to perform a manual QPTR IAW OST-1039, CALCULATION OF QPTR. The Power Range NIS readings are provided in the table below. **For the purposes of the examination, there will be no independent verification. Show values of your work.**

PR NIS Readings*

PRNIS Channel	UPPER READING	LOWER READING
N41	115.7	128.3
N42	125.3	151.2
N43	144.8	160.9
N44	120.8	137.1

* All values were taken with the Range/Rate switch in 400 µA/Slow position.

Task Standard: Calculations within required band.
Correct Tech Spec actions are identified.

Required Materials: Calculator

General References: OST-1039, CALCULATION OF QPTR, Revision 15
Technical Specifications

Handouts:

- OST-1039
- Power Range NI – Current and Voltage Set point Table
- Technical Specifications

Time Critical Task: No

Validation Time: 10 minutes

Critical Step Justification	
Step 11	Must accurately determine the correct calculation based on collecting and inputting either provided data or visual inspection data. The calculation will yield an unsatisfactory QPTR.
Step 14	Must identify that the QPTR upper is outside the band which will make this overall results unsatisfactory.
Step 15	Must unsatisfactory that the QPTR is greater than 1.02 (which is a Tech Spec limit).
Step 16	Must correctly identify through documentation that the QPTR limits are exceeded.

Start Time: _____.

Performance Step: 1 Obtain procedure.

Standard: Reviews procedure.

Evaluator Cue:	**Provide OST-1039.**

Evaluator Note: **A KEY is provided for your use on JPM prior to candidate pages.**

Comment:

Evaluator Note:	**NOTE: The NI curve numbers provided in this JPM are numbers made specifically for use in this JPM they are NOT current plant values.**

Procedure Note: Precaution and Limitation 4.0.1 has guidance if performing this OST with one Power Range Channel inoperable.

Performance Step: 2 Completes Prerequisites section:

- Verify instrumentation needed for the performance of this test is free of deficiencies that affect instrument indication.
- Verify the most recent Curve F-X-8 is used in the performance of this procedure. (Reference 2.1.1 and 2.1.2)
- OBTAIN CRS permission to perform this OST.

Standard:

- Logs F-X-8 revision number : 9
- Initials/signs all blocks

Comment:

Performance Step: 3

- IF Quadrant Power Tilt Ratio Calculation Computer Program is used, THEN PERFORM the following:
  - MARK Step 7.0.2 N/A.
  - MARK Section 7.2 N/A.
  - PERFORM Section 7.1.
- IF manual calculation of the Quadrant Power Tilt Ratio is used, THEN PERFORM the following:
  - MARK Section 7.1 N/A.
  - PERFORM Section 7.2.

Standard:

- Marks Section 7.1 N/A
- Proceeds to Section 7.2

Comment:

OST-1039 Section 7.2 Note prior to step 1

Performance Step: 4

NOTE: The detector current meters on each power range channel drawer are designated as left-upper, right-lower.

Standard:

Reads and circle slashes note

Comment:

OST-1039 Section 7.2, Step 1

Performance Step: 5

Prior to reading the value of detector current, VERIFY the meter range/rate switch is in the 400 µA/SLOW position.

Standard:

Prior to reading the value of detector current, VERIFIES the Meter Range/Rate switch is in the 400 µA/SLOW position.

Evaluator Note:	**This information is on the JPM Cue Sheet**

Comment:

OST-1039 Section 7.2, Step 2

Performance Step: 6 RECORD on Attachment 2, in column A, the upper and lower detector currents from all operable power range channels as read on the Nuclear Instrumentation Cabinet.

Standard: Transposes readings from PRNIS Readings Table onto Attachment 2.

Comment:

OST-1039 Section 7.2, Step 3

√ **Performance Step: 7** RECORD on Attachment 2, in column B, the 100% power normalized current for each channel from Curve F-x-8.

Standard: Transposes TOP and BOTTOM 100% current values from the Curve Book provided.

Comment:

OST-1039 Section 7.2, Note prior to Step 4

Performance Step: 8 NOTE: When recording all fractions and ratios, record to four decimal places, dropping the fifth and subsequent decimal places.

Standard: Reads and circle slashes note

Comment:

OST-1039 Section 7.2, Step 4

Performance Step: 9 Divide values in Column A by the respective normalized current in Column B and record the result in Column C as the Normalized Fraction.

Standard: Divides each Upper and Lower reading by the respective 100% normalized current value and records in Column C.

Comment:

OST-1039 Section 7.2, Step 5

Performance Step: 10 CALCULATE the average value for the upper and the lower Normalized Fractions as follows:

- ADD the Normalized Fraction in each section of column C, recording the sum in the space provided.
- DIVIDE the sum obtained in Step 7.2.5.a by the number of operable NI channels, recording the result in column D of Attachment 2.

Standard: Adds all Normalized Fractions for the same plane and records the sum in the space provided.

Divides by the sum by four and records result in Column D.

Comment:

OST-1039 Section 7.2, Step 6

√ **Performance Step: 11** Using the formula and values from Attachment 2, CALCULATE the Upper and Lower Ratios.

Standard:

- Divides the Maximum Normalized Fraction by the Average Normalized Fraction on each plane.
- Determines the UPPER ratio is ≥ 1.02

Evaluator Note:	**The applicant may inform the CRS as soon as any calculation is > 1.02. If so, acknowledge and direct applicant to complete Attachment 2.**

Comment:

OST-1039 Section 7.2, Step 7

Performance Step: 12 PERFORM independent verification of all calculations made on Attachment 2.

Standard: Requests Independent Verifier.

Evaluator Cue: **If necessary, repeat Initiating Cue: For the purpose of this examination, there will be no independent verification of your work.**

Comment: **Candidate may choose to check calculations.**

OST-1039 Section 7.2, Note prior to Step 8

Performance Step: 13 NOTE: The upper ratio or the lower ratio, whichever is greater, is the quadrant power tilt ratio (QPTR).

Standard: Reads and circle slashes note

Comment:

OST-1039 Section 7.2, Step 8

√ **Performance Step: 14** RECORD QPTR:

Standard: Records QPTR value as 1.0400 to 1.0410 (N44 UPPER)
Identifies Upper as outside the band

Comment: **Acceptable band is +/- 5% (rounded to .0005).**
UPPER calculated band is 1.0400 to 1.0410
LOWER calculated band is 1.0155 to 1.0165

OST-1039 Section 7.2, Step 9

√ **Performance Step: 15** CHECK QPTR is less than or equal to 1.02.

Standard: **Identifies Upper QPTR as greater than 1.02 and QPTR is unacceptable**

Comment:

OST-1039 Section 7.3, Test Completion Step 1

√ **Performance Step: 16**

- IF this test was performed due to an inoperable QPTR alarm, THEN DOCUMENT completion of PMID 22125 RQ 01.
- COMPLETE applicable sections of Attachment 3, Certifications and Reviews.
- INFORM the CRS this test is completed.

Standard:

- Check marks Periodic Surveillance or notes AOP-001 in Comments section
- Plant Condition: 75% Power (may note dropped rod)
- Mode 1
- Today's Date
- Current Time
- OST Completed By: Applicant's name
- Initials/Name
- √ Indicate in General Comments Section and/or informs CRS that the limit is exceeded

Evaluator Cue: **Acknowledge any report.**

Comment:

Terminating Cue:	**After the CRS has been notified:** **Evaluation on this JPM is complete.**

STOP Time: _____.

KEY

Record QPTR = **1.0405** Acceptable band is +/- 5% (rounded to .0005) 1.0400 to 1.0410

CHECK QPTR is less than or equal to 1.02 (circle) YES / **NO**

UPPER DETECTOR	A UPPER DETECTOR CURRENT	B UPPER 100% POWER NORMALIZED CURRENT	C UPPER NORMALIZED FRACTION (NOTE 1)	D AVERAGE UPPER NORMALIZED FRACTION
N-41	115.7	152.9	0.7567	0.7543
N-42	125.3	172.7	0.7255	
N-43	144.8	193.0	0.7502	
N-44	120.8	153.9	0.7849	
		SUM	3.0173	

$$\text{Upper Ratio} = \frac{\text{Maximum Upper Normalized Fraction}}{\text{Average Upper Normalized Fraction}} = \frac{0.7849}{0.7543} = 1.0405^{*}$$

* Standard for this calculation is 1.0400 to 1.0410

LOWER DETECTOR	A LOWER DETECTOR CURRENT	B LOWER 100% POWER NORMALIZED CURRENT	C LOWER NORMALIZED FRACTION (NOTE 1)	D AVERAGE LOWER NORMALIZED FRACTION
N-41	128.3	174.1	0.7369	0.7425
N-42	151.2	200.4	0.7544	
N-43	160.9	214.7	0.7494	
N-44	137.1	187.9	0.7296	
		SUM	2.9703	

$$\text{Lower Ratio} = \frac{\text{Maximum Lower Normalized Fraction}}{\text{Average Lower Normalized Fraction}} = \frac{0.7544}{0.7425} = 1.0160^{**}$$

** Standard for this calculation is 1.0155 to 1.0165

✓ - Denotes Critical Steps

VERIFICATION OF COMPLETION

Job Performance Measure No.: 2012 NRC Exam Admin JPM RO A2
Perform a Quadrant Power Tilt Ratio Surveillance

Examinee's Name:

Date Performed:

Facility Evaluator:

Number of Attempts:

Time to Complete:

Question Documentation:

Question:

Response:

Result: SAT _____ UNSAT _____

Examiner's Signature: _____ Date: _____

JPM CUE SHEET

Name: _____

Date: _____

Initial Conditions:	• The plant is operating at 100% power when a rod in Control Bank "B" (M-6) dropped. • The crew is performing AOP-001, MALFUNCTION OF ROD CONTROL AND INDICATION SYSTEM. • There are NO deficiency tags on PR NIs.

Initiating Cue:	The CRS has directed you to perform a manual QPTR IAW OST-1039, CALCULATION OF QPTR. The Power Range NIS readings are provided in the table below. **For the purposes of the examination, there will be no independent verification. Show values of your work.**

PR NIS Readings*

PRNIS Channel	UPPER READING	LOWER READING
N41	115.7	128.3
N42	125.3	151.2
N43	144.8	160.9
N44	120.8	137.1

* All values were taken with the Range/Rate switch in 400 µA/Slow position.

Current and Voltage Setpoints Table
(100% Power, 0% Incore Axial Offset)

Channel #	Top Current (μA)	Bottom Current (μA)
N41	152.9	174.1
N42	172.7	200.4
N43	193.0	214.7
N44	153.9	187.9

Curve No.	F-17-8	Rev. 9

WORKSHEET INFORMATION

Facility:	Shearon Harris	Task No.:	301135H601
Task Title:	Determine Requirements for Makeup to RWST During a Large Break LOCA after Cold Leg Recirculation has been established	JPM No.:	2012 NRC Exam Admin JPM RO/SRO A1-1
K/A Reference:	G 2.1.25 RO 3.9 SRO 4.2	**Alternate path: No**	

Examinee: _____ NRC Examiner: _____

Facility Evaluator: _____ Date: _____

Method of testing:

Simulated Performance: _____ Actual Performance: X

Classroom X Simulator _____ Plant _____

READ TO THE EXAMINEE

I will explain the initial conditions, which steps to simulate or discuss, and provide initiating cues. When you complete the task successfully, the objective for this Job Performance Measure will be satisfied.

Initial Conditions:	• The plant was at 100% power when a Large Break Loss Of Coolant Accident occurred. • The crew had entered and was working through PATH-1. • RWST level reached 23.4% and the crew transitioned to EPP-010, Transfer to Cold Leg Recirculation. • The transfer has been completed. • The CRS is now on step 13.a, Monitor For Degraded Recirculation Sump Performance and Add makeup to RWST using OP-107.01, "CVCS BORATION, DILUTION, AND CHEMISTRY CONTROL", Section 8.4, Blender Manual Operation.

Initiating Cue:	With the information provided below, the CRS has directed you to determine the requirements for the RWST makeup using OP-107.01, attachment 5. Calculations should accomplish RWST makeup in the least amount of time allowed by procedure. Plant Data: RWST Initial Boron Concentration = 2489 PPM RWST Initial Level = 20% BAT Boron Concentration = 7263 PPM RWST Final Level = 60% RWST Final Boron Concentration = 2500 PPM

Task Standard: From the provided information the candidate will determine the RWST initial and final volumes, boron concentrations, flowrates and controller setpoints to makeup to the RWST during a Large Break LOCA event.

Required Materials:
- Calculator
- Ruler
- Handouts

General References: Plant curve D-1 Rev. 0
OP-107.01, Attachment 5 and Attachment 7, Rev. 18

Handouts:
- Plant data on candidate cue sheet
- All Curves from Section D of the Curve Book
- OP-107.01, Attachment 5 and Attachment 7, Rev. 18

Time Critical Task: No

Validation Time: 20 minutes

	Critical Task Justification
Step 6	Must determine final RWST tank boron concentration to prevent dilution of RCS when RWST is used for suction source of ECCS pumps.
Step 7	Must determine correct volume of blended fluid to be added or blend will be incorrect.
Step 8	Must determine required blended flow concentration or final tank volume will be at incorrect concentration.
Step 11	Must determine required blended flow rate or final tank volume will be at incorrect concentration.
Step 12	Must determine total volume of boric acid required, if the wrong volume is determined the final RWST tank boron concentration will be incorrect.
Step 14	Must determine required controller setpoint or the blended flow concentration and final tank boron concentration will be incorrect.
Step 16	Must determine required controller setpoint or the blended flow concentration and final tank boron concentration will be incorrect.

Start Time: _____

Performance Step: 1 Refers to plant data provided, Curve D-1 and OP-107.01 Attachments 5 and 7.

Comment:

OP-107.01 Attachments 5, Step 1 Obtain data:

Performance Step: 2 Reviews provided data and determines
C_1 = 2,489 PPM

Standard: Transfers provided data correctly to line 1, C_1 = 2,489 PPM

Comment:

OP-107.01 Attachments 5, Step 1 (continued)

Performance Step: 3 Determine Initial Tank Volume V_1 (RWST)

Standard: V_1 = Initial RWST Tank Volume
= 20%
Curve D-1 RWST Volume 20% indicated level = 140,000 GAL
(135,000 – 145,000)

Comment:

OP-107.01 Attachments 5, Step 1 (continued)

Performance Step: 4 Determine C_{BAT}

Standard: Transfers provided data correctly to line 1, C_{BAT} = 7,263 PPM

Comment:

OP-107.01 Attachments 5, Step 1 (continued)

Performance Step: 5 Determine Final Tank Volume V3 (RWST) = 60%

Standard: CRS provided data that RSWT should be filled to 60%
Curve D-1, 60% RWST level = 305,000 GAL
(Based on ½ value of curve increments
Range = 300,000 – 310,000 GAL)

Comment:

OP-107.01 Attachments 5, Step 1 (continued)

√ **Performance Step: 6** Determine Final Tank Boron Concentration C_3

Standard: Reviews provided data and determines
C_3 = 2,500 PPM

Comment:

OP-107.01 Attachments 5, Step 2

√ **Performance Step: 7** Calculate volume of the blended fluid to be added:
$V_2 = V_3 - V_1$ = _____GAL

Standard: Determines V_2 = 165,000 GAL
(Based on reading of RWST volume at 60%,
Range = 155,000 – 175,000 GAL)

Comment:

OP-107.01 Attachments 5, Step 3

√ **Performance Step: 8** Calculate the required blended flow concentration by inserting the appropriate values from step 2.

$C_2 = (C_3 V_3) - C_1 V_1) \div V_2$

Standard: Calculates C_2

(2,500) (305,000) – (2,489) (140,000) ÷ (165,000) = 2,509.3 PPM

(Based on previous values used and ranges for each value, C_2 Range = 2508.5 – 2510.3 PPM)

Comment:

OP-107.01 Attachments 5, Note Prior to step 4

Performance Step: 9 Note: Blended flows at high boron concentrations require lower total makeup flow as indicated in Attachment 7.

Standard: Reads and circle slashes note

Comment:

OP-107.01 Attachments 5, Step 4

Performance Step: 10 Using the required blended flow concentration (C_2) and the Boric Acid Tank boron concentration (C_{BAT}), SELECT an appropriate total makeup flow rate (Q) from Attachment 7.

Standard: Using C_2 = 2,509.3 PPM and the provided information of BA Tank concentration of 7263 PPM selects the appropriate total makeup flow rate (Q) as 80 GPM from Attachment 7 page 114.

Comment:

OP-107.01 Attachments 5, Step 5

✓ **Performance Step: 11** CALCULATE the required boric acid flowrate:
X = Boric Acid Flowrate = Q (C_2) ÷ (C_{BAT})

Standard: Determines X = 80 (2509.3) ÷ 7263 = 27.6
(Based on previous calculations, Range = 27 – 28 GPM)

Comment:

OP-107.01 Attachments 5, Step 6

✓ **Performance Step: 12** CALCULATE total volume of boric acid: (X is equal to boric acid flowrate)
Volume of BA = (X) (V_2) ÷ (Q)

Standard: Calculates Volume of BA = (27.6) (165,000) ÷ 80 = 56,925 GAL
(Based on all calculations to this point,
Range = 53,475 – 60,375 GAL)

Comment:

OP-107.01 Attachments 5, Note prior to Step 7

Performance Step: 13 NOTE: The boric Acid Flow Controller has a 10 turn potentiometer and controls linearly from 0 to 50 gpm.

Standard: Reads and circle slashes note.

Comment:

OP-107.01 Attachments 5, Step 7

✓ **Performance Step: 14** CALCULATE the required controller setpoint per the following equation:

(X) gpm ÷ 5 gpm/turn

Standard: Calculates X = 27.6 ÷ 5 gpm/turn = 5.5

(Based on previous ranges the range is 5.4 – 5.6 turns)

Comment:

OP-107.01 Attachments 5, Note prior to Step 8

Performance Step: 15 NOTE: The RWMU Flow controller has a 10 turn potentiometer and controls linearly from 0 to 160 gpm.

Standard: Reads and circle slashes note

Comment:

OP-107.01 Attachments 5, Step 8

✓ **Performance Step: 16** CALCULATE the required controller setpoint per the following equation:

Q gpm ÷ 16 gpm/turn = turns

Standard: Calculates required RWMU controller setpoint as:

80 gpm ÷ 16 gpm/turn = 5 turns

(no range)

Comment:

Performance Step: 17 Report to CRS that RWST blender requirements have been completed.

Standard: Informs examiner that task is complete

Comment:

Terminating Cue:	**After the candidate has returned their data sheet and reported that the calculation for RWST makeup is complete:** **Evaluation on this JPM is complete.**

Stop Time: _____

Plant Data (provided with candidate cue sheet):

RWST Boron Concentration =	2489 PPM
RWST Level =	20%
BAT Boron Concentration =	7263 PPM
RWST Final Volume =	60%
RWST Final Boron Concentration =	2500 PPM

Recorded RESULTS of Calculations on OP-107.01 Attachment 5

Initial RWST volume =	140,000 Gallons (135,000 – 145,000)
Final RWST volume =	305,000 Gallons (300,000 – 310,000)
Step 2, volume of blended fluid added =	165,000 Gallons (155,000 – 175,000)
Step 3, Required blended flow concentration =	2509 PPM (2508 – 2511)
Step 4, Selected total makeup flowrate =	80 GPM (80 – 80)
Step 5, Required boric acid flowrate =	27.6 GPM (27 – 28)
Step 6, Volume of boric acid added =	56,925 Gallons (53,475 – 60,375)
Step 7, Required BA controller setpoint =	5.5 turns (5.4 – 5.6)
Step 8, Required RWMU controller setpoint =	5 turns (5 – 5)

NOTE: Step 5 – the boric acid counter has a tenths place therefore the calculation is not rounded off to whole numbers. Therefore the range for step 5 should be 27 – 28

KEY

CONTROL ROOM COPY
DO NOT REMOVE

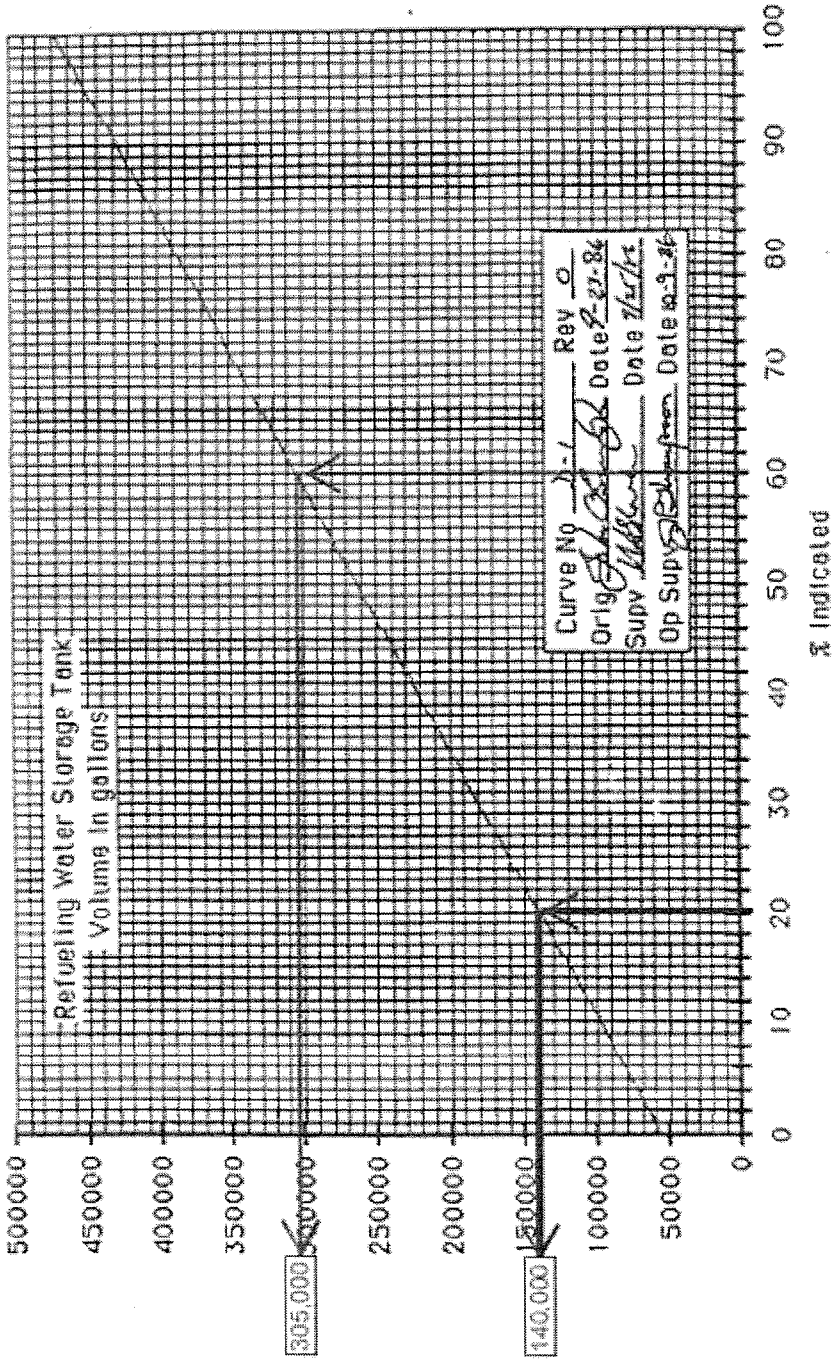

KEY

REFERENCE USE
Attachment 5 - Blender Manual Operation Calculation Sheet
Sheet 1 of 4

Person(s) Performing Checklist

Initials	Name (Print)	Initials	Name (Print)

Remarks – Indicate any component not in the prescribed position.

Checklist Started Time _____ Date _____

Checklist Completed Time _____ Date _____

Approved by _____ Date _____
CRS

After receiving the final review signature, this OP Attachment becomes a QA RECORD.

KEY

REFERENCE USE

Attachment 5 – Blender Manual Operation Calculation Sheet

Sheet 2 of 4

1. **OBTAIN** the following data:

Initial Tank Boron Concentration	C_1 = 2489 PPM
Initial Tank Volume	V_1 = 140000 GAL
Boric Acid Tank Boron Concentration	C_{BAT} = 7263 PPM
Final Tank Volume	V_3 = 305000 GAL
Final Tank Boron Concentration	C_3 = 2500 PPM

2. **CALCULATE** volume of the blended fluid to be added:

$V_2 = V_3 - V_1 =$ _____ GAL

$V_2 =$ 305000 - 140000 = 165000 GAL _____

Verify

3. **CALCULATE** the required blended flow concentration by inserting the appropriate values from above:

$$C_2 = \frac{(C_3 V_3) - (C_1 V_1)}{V_2} = _____ \text{ PPM}$$

$$C_2 = \frac{(2500)(305000) - (2489)(140000)}{(165000)} = 2509.3 \text{ PPM}$$ _____

Verify

NOTE:	Blended flows at high boron concentrations require lower total makeup flow as indicated in Attachment 7.

4. Using the required blended flow concentration (C_2) and the Boric Acid Tank boron concentration (C_{BAT}), **SELECT** an appropriate total makeup flow rate (Q) from Attachment 7.

Q = 80 GPM _____

Verify

KEY

REFERENCE USE
Attachment 5 – Blender Manual Operation Calculation Sheet
Sheet 3 of 4

5. **CALCULATE** the required boric acid flowrate:

X = Boric Acid Flowrate = $\frac{Q\,(C_2)}{(C_{SAT})}$ = _____ GPM

X = Boric Acid Flowrate = $\frac{80\,(2509.3)}{(7263)}$ = 27.6 GPM

_____

Verify

a. **IF** the calculated Boric Acid flow rate (X) is greater than 30 gpm, **THEN RECALCULATE** using a lower total makeup flow rate (Q). N/A

6. **CALCULATE** total volume of boric acid: (X is equal to boric acid flowrate)

Volume of Boric Acid = $\frac{(X)(V_2)}{Q}$ = _____ GAL _____

Volume of Boric Acid = $\frac{(27.6)(165000)}{(80)}$ = 56925 GAL _____

Verify

NOTE:	The Boric Acid Flow Controller has a 10 turn potentiometer and controls linearly from 0 to 50 gpm.

7. **CALCULATE** the required controller setpoint per the following equation:

(X) gpm ÷ 5 gpm/turn = _____ turns

27.6 gpm ÷ 5 gpm/turn = 5.5 turns _____

Verify

KEY

REFERENCE USE
Attachment 5 – Blender Manual Operation Calculation Sheet
Sheet 4 of 4

NOTE:	The RWMU Flow controller has a 10 turn potentiometer and controls linearly from 0 to 160 gpm.

8. **CALCULATE** the required controller setpoint per the following equation:

___(Q)___ gpm ÷ 16 gpm/turn = _____ turns

___80___ gpm ÷ 16 gpm/turn = ___5___ turns _____

_____
Verify

KEY

REFERENCE USE
Attachment 7 – Makeup Concentration Limits
Sheet 6 of 9

RWMU Total Makeup Flow Rate Q = 80gpm

1. To determine the maximum boron concentration for which makeup will be reliable at 80 gpm total flow, select the BAT boron concentration that is equal to or lower than current BAT boron concentration.
2. To determine the minimum boron concentration for which makeup will be reliable at 80 gpm total flow, select the BAT boron concentration which is equal to or higher than current BAT boron concentration.

BAT BORON CONCENTRATION (PPM)	MAXIMUM PPM FOR 80 GPM MAKEUP (30 GPM BA FLOW)	MINIMUM PPM FOR 80 GPM MAKEUP (1 GPM BA FLOW)
7000	2625	88
7050	2643	89
7100	2662	89
7150	2681	90
7200	2700	90
7250	2718	91
7300	2737	92
7350	2756	92
7400	2775	93
7450	2793	94
7500	2812	94
7550	2831	95
7600	2850	95
7650	2868	96
7700	2887	97
7750	2906	97

VERIFICATION OF COMPLETION

Job Performance Measure No.: 2012 NRC Admin Exam JPM SRO A1-1

Determine Requirements for Makeup to RWST During a Large Break LOCA after Cold Leg Recirculation has been established

EOP-EPP-010, OP-107.01, Curve D-1

Examinee's Name:

Date Performed:

Facility Evaluator:

Number of Attempts:

Time to Complete:

Question Documentation:

Question:

Response:

Result: SAT _____ UNSAT _____

Examiner's Signature: _____ Date: _____

Name: _____

Date: _____

Initial Conditions:	• The plant was at 100% power when a Large Break Loss Of Coolant Accident occurred. • The crew had entered and was working through PATH-1. • RWST level reached 23.4% and the crew transitioned to EPP-010, Transfer to Cold Leg Recirculation. • The transfer has been completed. • The CRS is now on step 13.a, Monitor For Degraded Recirculation Sump Performance and Add makeup to RWST using OP-107.01, "CVCS BORATION, DILUTION, AND CHEMISTRY CONTROL", Section 8.4, Blender Manual Operation.

Initiating Cue:	With the information provided below, the CRS has directed you to determine the requirements for the RWST makeup using OP-107.01, attachment 5. Calculations should accomplish RWST makeup in the least amount of time allowed by procedure. Plant Data: RWST Initial Boron Concentration = 2489 PPM RWST Initial Level = 20% BAT Boron Concentration = 7263 PPM RWST Final Level = 60% RWST Final Boron Concentration = 2500 PPM

REFERENCE USE
Attachment 5 - Blender Manual Operation Calculation Sheet
Sheet 1 of 4

Person(s) Performing Checklist

Initials	Name (Print)	Initials	Name (Print)

Remarks – Indicate any component not in the prescribed position.

Checklist Started Time _____ Date _____

Checklist Completed Time _____ Date _____

Approved by _____ Date _____
CRS

After receiving the final review signature, this OP Attachment becomes a QA RECORD.

REFERENCE USE

Attachment 5 – Blender Manual Operation Calculation Sheet

Sheet 2 of 4

1. **OBTAIN** the following data:

Initial Tank Boron Concentration	C_1 = _____ PPM
Initial Tank Volume	V_1 = _____ GAL
Boric Acid Tank Boron Concentration	C_{BAT} = _____ PPM
Final Tank Volume	V_3 = _____ GAL
Final Tank Boron Concentration	C_3 = _____ PPM

2. **CALCULATE** volume of the blended fluid to be added:

$V_2 = V_3 - V_1$ = _____ GAL

V_2 = _____ - _____ = _____ GAL _____

Verify

3. **CALCULATE** the required blended flow concentration by inserting the appropriate values from above:

$$C_2 = \frac{(C_3 V_3) - (C_1 V_1)}{V_2} = _____ \text{ PPM}$$

C_2 = (_____)(_____) - (_____)(_____) = _____ PPM _____

(_____)

Verify

NOTE:	Blended flows at high boron concentrations require lower total makeup flow as indicated in Attachment 7.

4. Using the required blended flow concentration (C_2) and the Boric Acid Tank boron concentration (C_{BAT}), **SELECT** an appropriate total makeup flow rate (Q) from Attachment 7.

Q = _____ GPM _____

Verify

REFERENCE USE
Attachment 5 – Blender Manual Operation Calculation Sheet
Sheet 3 of 4

5. **CALCULATE** the required boric acid flowrate:

X = Boric Acid Flowrate = $\frac{Q\,(C_2)}{(C_{BAT})}$ = _____ GPM

X = Boric Acid Flowrate = $\frac{(_____)}{(_____)}$ = _____ GPM

_____

_____
Verify

a. **IF** the calculated Boric Acid flow rate (X) is greater than 30 gpm, **THEN RECALCULATE** using a lower total makeup flow rate (Q). _____

6. **CALCULATE** total volume of boric acid: (X is equal to boric acid flowrate)

Volume of Boric Acid = $\frac{(X)(V_2)}{Q}$ = _____ GAL _____

Volume of Boric Acid = $\frac{(_____)(_____)}{(_____)}$ = _____ GAL _____

_____
Verify

NOTE:	The Boric Acid Flow Controller has a 10 turn potentiometer and controls linearly from 0 to 50 gpm.

7. **CALCULATE** the required controller setpoint per the following equation:

_____(X)_____ gpm ÷ 5 gpm/turn = _____ turns

_____ gpm ÷ 5 gpm/turn = _____ turns _____

_____
Verify

REFERENCE USE
Attachment 5 – Blender Manual Operation Calculation Sheet
Sheet 4 of 4

NOTE:	The RWMU Flow controller has a 10 turn potentiometer and controls linearly from 0 to 160 gpm.

8. **CALCULATE** the required controller setpoint per the following equation:

____(Q)____ gpm ÷ 16 gpm/turn = _____ turns

_____ gpm ÷ 16 gpm/turn = _____ turns _____

Verify

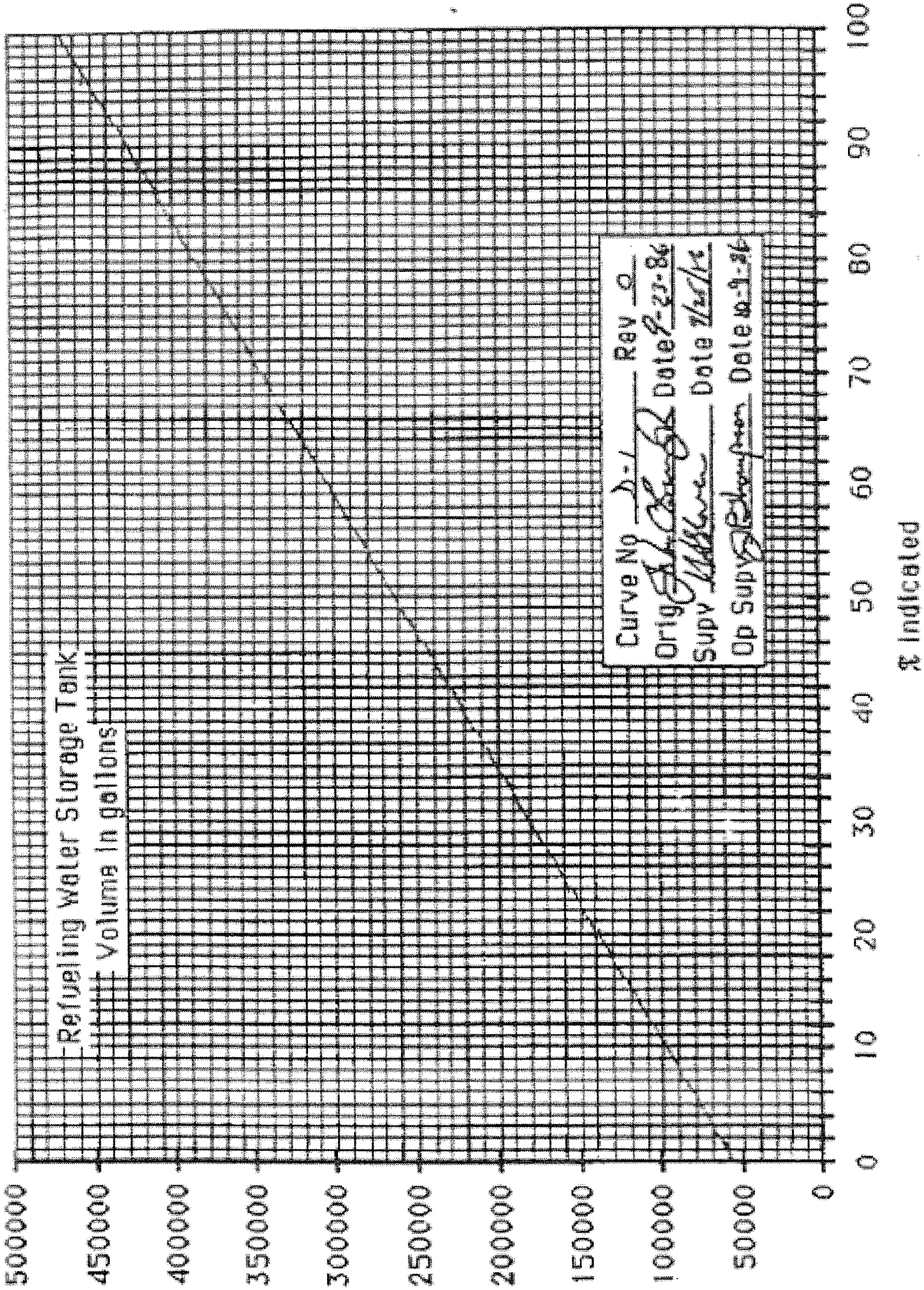
Refueling Water Storage Tank
Volume in gallons
500000
450000
400000
350000
300000
250000
200000
150000
100000
50000
0
0
10
20
30
40
50
60
70
80
90
100
% Indicated
Curve No
Rev 0
Orig
Date
Supv
Date
Op Supv
Date

REFERENCE USE
Attachment 7 - Makeup Concentration Limits
Sheet 1 of 9

These tables were derived per calculation HNP-I/INST-1056 using the equations of Attachment 1 and provide a means to select an appropriate RWMU Total Makeup Flow Rate (Q) which will yield a desired blended flow boron concentration when matched to the BAT concentration and the Boric Acid Flow Rate span of 1 to 30 gpm.

It is necessary to select lower RWMU Total Makeup Flow Rates when high boron concentrations are required because the Boric Acid Flow is limited by system configuration to a maximum of 33 gpm. This maximum Boric Acid Flow capability however is not used as the basis for these tables because it is necessary to allow some margin for possible system performance degradation. Therefore a maximum Boric Acid Flow of 30 gpm is used as the basis for the following tables.

Each sheet of the tables is applicable to a specific RWMU Total Makeup Flow Rate (Q).

The maximum ppm results have been rounded down to the nearest whole number and the minimum ppm results have been rounded up to the nearest whole number.

REFERENCE USE
Attachment 7 – Makeup Concentration Limits
Sheet 2 of 9

RWMU Total Makeup Flow Rate Q = 120gpm

1. To determine the maximum boron concentration for which makeup will be reliable at 120 gpm total flow, select the BAT boron concentration that is equal to or lower than current BAT boron concentration.
2. To determine the minimum boron concentration for which makeup will be reliable at 120 gpm total flow, select the BAT boron concentration which is equal to or higher than current BAT boron concentration.

BAT BORON CONCENTRATION (PPM)	MAXIMUM PPM FOR 120 GPM MAKEUP (30 GPM BA FLOW)	MINIMUM PPM FOR 120 GPM MAKEUP (1 GPM BA FLOW)
7000	1750	59
7050	1762	59
7100	1775	60
7150	1787	60
7200	1800	60
7250	1812	61
7300	1825	61
7350	1837	62
7400	1850	62
7450	1862	63
7500	1875	63
7550	1887	63
7600	1900	64
7650	1912	64
7700	1925	65
7750	1937	65

REFERENCE USE
Attachment 7 – Makeup Concentration Limits
Sheet 3 of 9

RWMU Total Makeup Flow Rate Q = 110gpm

1. To determine the maximum boron concentration for which makeup will be reliable at 110 gpm total flow, select the BAT boron concentration that is equal to or lower than current BAT boron concentration.
2. To determine the minimum boron concentration for which makeup will be reliable at 110 gpm total flow, select the BAT boron concentration which is equal to or higher than current BAT boron concentration.

BAT BORON CONCENTRATION (PPM)	MAXIMUM PPM FOR 110 GPM MAKEUP (30 GPM BA FLOW)	MINIMUM PPM FOR 110 GPM MAKEUP (1 GPM BA FLOW)
7000	1909	64
7050	1922	65
7100	1936	65
7150	1950	65
7200	1963	66
7250	1977	66
7300	1990	67
7350	2004	67
7400	2018	68
7450	2031	68
7500	2045	69
7550	2059	69
7600	2072	70
7650	2086	70
7700	2100	70
7750	2113	71

REFERENCE USE
Attachment 7 – Makeup Concentration Limits
Sheet 4 of 9

RWMU Total Makeup Flow Rate Q = 100gpm

1. To determine the maximum boron concentration for which makeup will be reliable at 100 gpm total flow, select the BAT boron concentration that is equal to or lower than current BAT boron concentration.
2. To determine the minimum boron concentration for which makeup will be reliable at 100 gpm total flow, select the BAT boron concentration which is equal to or higher than current BAT boron concentration.

BAT BORON CONCENTRATION (PPM)	MAXIMUM PPM FOR 100 GPM MAKEUP (30 GPM BA FLOW)	MINIMUM PPM FOR 100 GPM MAKEUP (1 GPM BA FLOW)
7000	2100	70
7050	2115	71
7100	2130	71
7150	2145	72
7200	2160	72
7250	2175	73
7300	2190	73
7350	2205	74
7400	2220	74
7450	2235	75
7500	2250	75
7550	2265	76
7600	2280	76
7650	2295	77
7700	2310	77
7750	2325	78

REFERENCE USE
Attachment 7 – Makeup Concentration Limits
Sheet 5 of 9

RWMU Total Makeup Flow Rate Q = 90gpm

1. To determine the maximum boron concentration for which makeup will be reliable at 90 gpm total flow, select the BAT boron concentration that is equal to or lower than current BAT boron concentration.
2. To determine the minimum boron concentration for which makeup will be reliable at 90 gpm total flow, select the BAT boron concentration which is equal to or higher than current BAT boron concentration.

BAT BORON CONCENTRATION (PPM)	MAXIMUM PPM FOR 90 GPM MAKEUP (30 GPM BA FLOW)	MINIMUM PPM FOR 90 GPM MAKEUP (1 GPM BA FLOW)
7000	2333	78
7050	2350	79
7100	2366	79
7150	2383	80
7200	2400	80
7250	2416	81
7300	2433	82
7350	2450	82
7400	2466	83
7450	2483	83
7500	2500	84
7550	2516	84
7600	2533	85
7650	2550	85
7700	2566	86
7750	2583	87

REFERENCE USE
Attachment 7 – Makeup Concentration Limits
Sheet 6 of 9

RWMU Total Makeup Flow Rate Q = 80gpm

1. To determine the maximum boron concentration for which makeup will be reliable at 80 gpm total flow, select the BAT boron concentration that is equal to or lower than current BAT boron concentration.
2. To determine the minimum boron concentration for which makeup will be reliable at 80 gpm total flow, select the BAT boron concentration which is equal to or higher than current BAT boron concentration.

BAT BORON CONCENTRATION (PPM)	MAXIMUM PPM FOR 80 GPM MAKEUP (30 GPM BA FLOW)	MINIMUM PPM FOR 80 GPM MAKEUP (1 GPM BA FLOW)
7000	2625	88
7050	2643	89
7100	2662	89
7150	2681	90
7200	2700	90
7250	2718	91
7300	2737	92
7350	2756	92
7400	2775	93
7450	2793	94
7500	2812	94
7550	2831	95
7600	2850	95
7650	2868	96
7700	2887	97
7750	2906	97

REFERENCE USE
Attachment 7 – Makeup Concentration Limits
Sheet 7 of 9

RWMU Total Makeup Flow Rate Q = 70gpm

1. To determine the maximum boron concentration for which makeup will be reliable at 70 gpm total flow, select the BAT boron concentration that is equal to or lower than current BAT boron concentration.
2. To determine the minimum boron concentration for which makeup will be reliable at 70 gpm total flow, select the BAT boron concentration which is equal to or higher than current BAT boron concentration.

BAT BORON CONCENTRATION (PPM)	MAXIMUM PPM FOR 70 GPM MAKEUP (30 GPM BA FLOW)	MINIMUM PPM FOR 70 GPM MAKEUP (1 GPM BA FLOW)
7000	3000	100
7050	3021	101
7100	3042	102
7150	3064	103
7200	3085	103
7250	3107	104
7300	3128	105
7350	3150	105
7400	3171	106
7450	3192	107
7500	3214	108
7550	3235	108
7600	3257	109
7650	3278	110
7700	3300	110
7750	3321	111

REFERENCE USE
Attachment 7 – Makeup Concentration Limits
Sheet 8 of 9

RWMU Total Makeup Flow Rate Q = 60gpm

1. To determine the maximum boron concentration for which makeup will be reliable at 60 gpm total flow, select the BAT boron concentration that is equal to or lower than current BAT boron concentration.
2. To determine the minimum boron concentration for which makeup will be reliable at 60 gpm total flow, select the BAT boron concentration which is equal to or higher than current BAT boron concentration.

BAT BORON CONCENTRATION (PPM)	MAXIMUM PPM FOR 60 GPM MAKEUP (30 GPM BA FLOW)	MINIMUM PPM FOR 60 GPM MAKEUP (1 GPM BA FLOW)
7000	3500	117
7050	3525	118
7100	3550	119
7150	3575	120
7200	3600	120
7250	3625	121
7300	3650	122
7350	3675	123
7400	3700	124
7450	3725	125
7500	3750	125
7550	3775	126
7600	3800	127
7650	3825	128
7700	3850	129
7750	3875	130

REFERENCE USE
Attachment 7 – Makeup Concentration Limits
Sheet 9 of 9

RWMU Total Makeup Flow Rate Q = 50gpm

1. To determine the maximum boron concentration for which makeup will be reliable at 50 gpm total flow, select the BAT boron concentration that is equal to or lower than current BAT boron concentration.
2. To determine the minimum boron concentration for which makeup will be reliable at 50 gpm total flow, select the BAT boron concentration which is equal to or higher than current BAT boron concentration.

BAT BORON CONCENTRATION (PPM)	MAXIMUM PPM FOR 50 GPM MAKEUP (30 GPM BA FLOW)	MINIMUM PPM FOR 50 GPM MAKEUP (1 GPM BA FLOW)
7000	4200	140
7050	4230	141
7100	4260	142
7150	4290	143
7200	4320	144
7250	4350	145
7300	4380	146
7350	4410	147
7400	4440	148
7450	4470	149
7500	4500	150
7550	4530	151
7600	4560	152
7650	4590	153
7700	4620	154
7750	4650	155