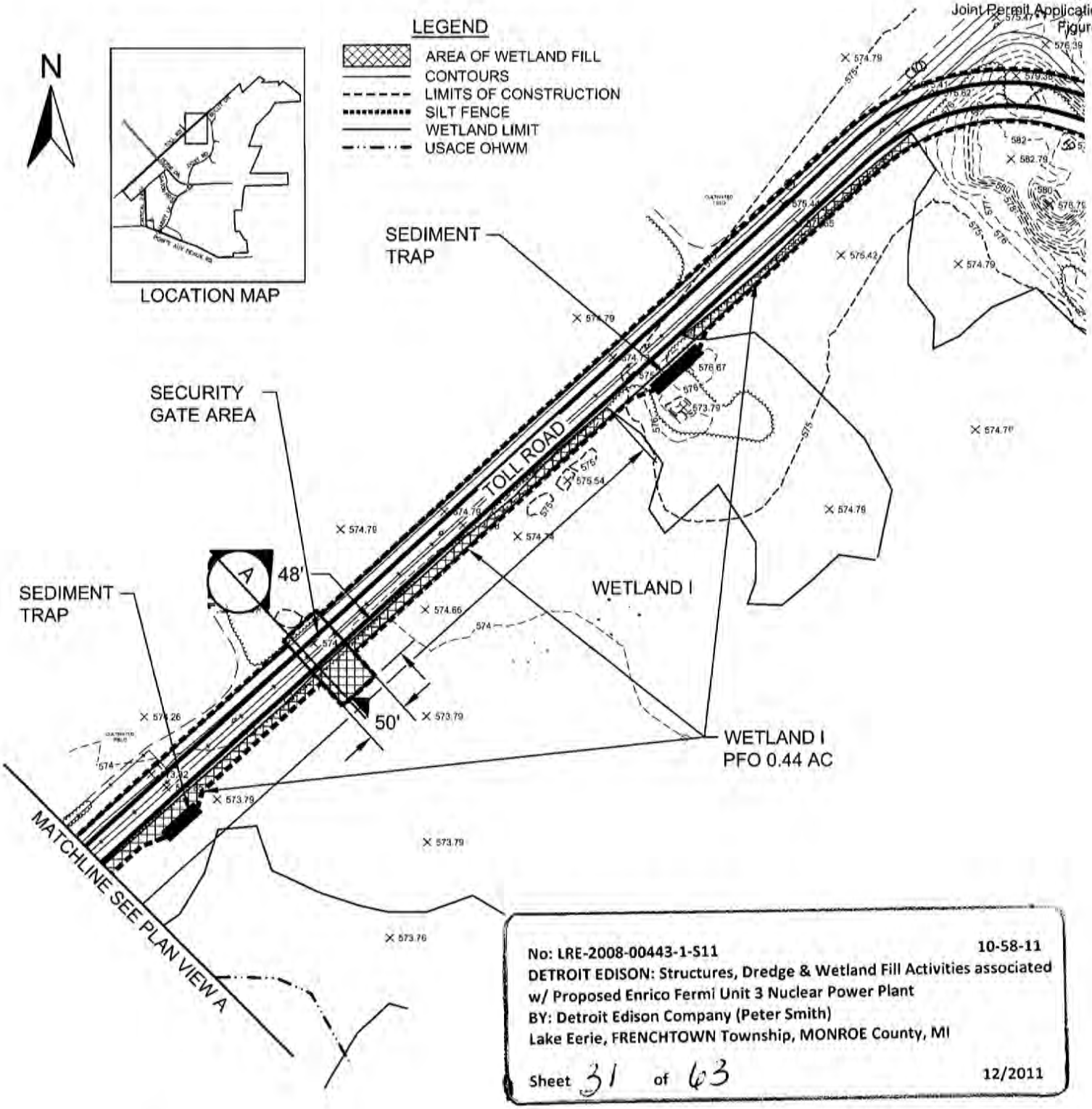

NOTE:
1. SPOILS FROM EXCAVATION WILL BE PLACED IN CONSTRUCTION AREA 1.
2. MECHANIZED LAND CLEARING WILL OCCUR WITHIN THE CONSTRUCTION FOOTPRINT.

WETLAND I
AREA = 0.44 acres
USACE OHWM DREDGE = NA
USACE OHWM EXCAVATION = 37 CY
WETLAND EXCAVATION = 37 CY
WETLAND FILL = 603 CY

FIGURE 12-8B NEW OPERATIONS ACCESS ROAD PLAN VIEW B

SCALE: 1"=150'

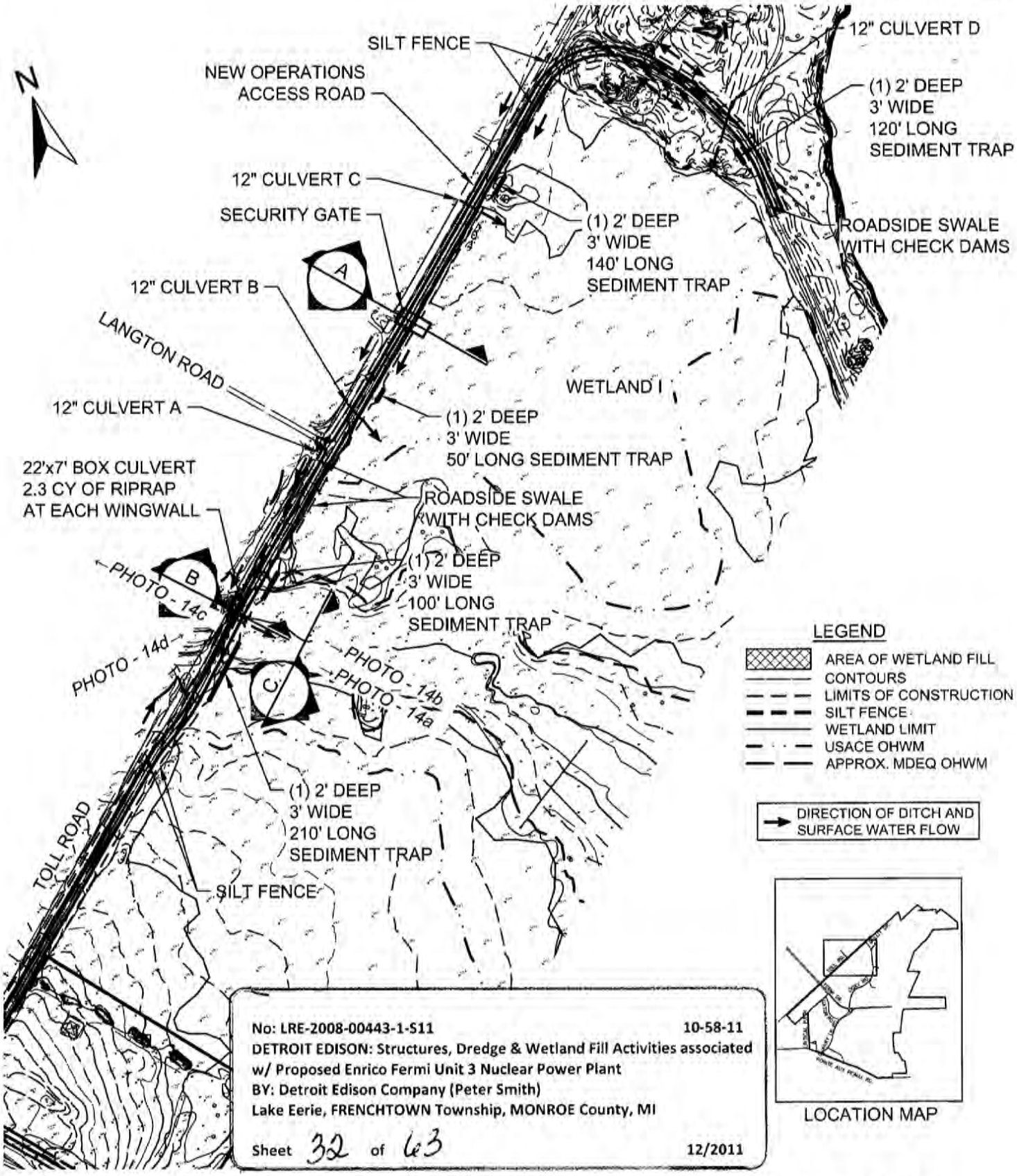

FIGURE 14-2A NEW OPERATIONS ACCESS ROAD PLAN VIEW

SCALE: 1"=500'

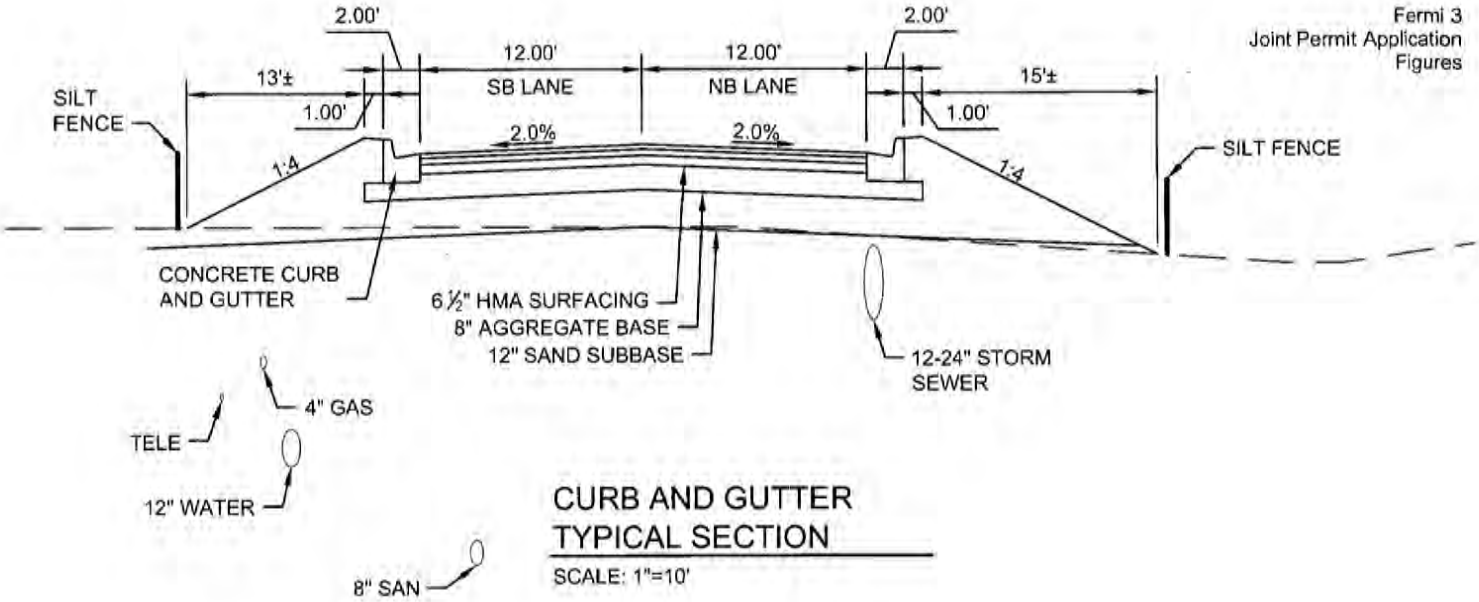

CURB AND GUTTER
TYPICAL SECTION
SCALE: 1"=10'

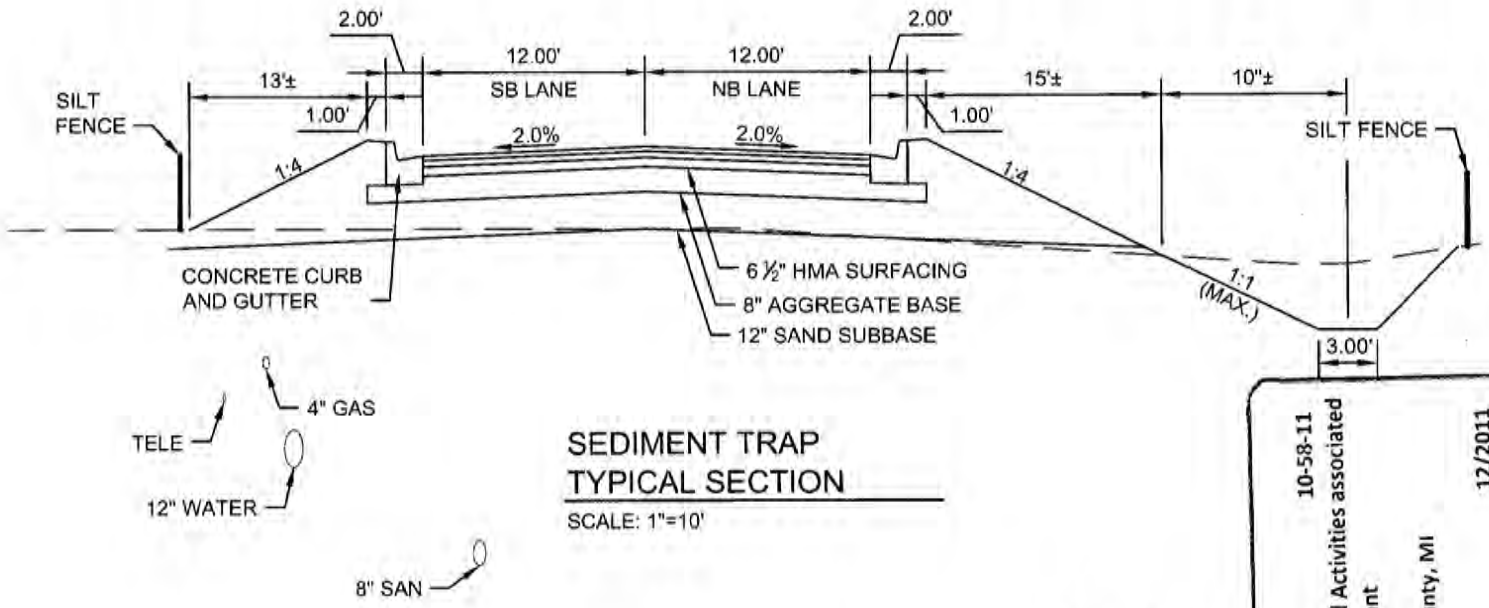

SEDIMENT TRAP
TYPICAL SECTION
SCALE: 1"=10'

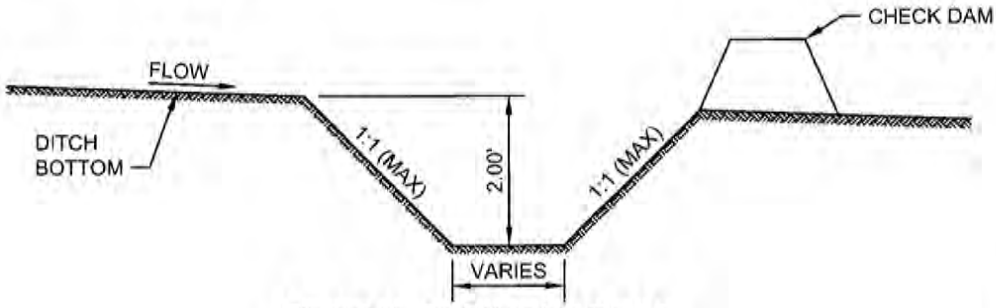

TYPICAL SEDIMENT TRAP
DETAIL PROFILE
SCALE: 1"=5'

No: LRE-2008-00443-1-511
DETROIT EDISON: Structures, Dredge & Wetland Fill Activities associated w/ Proposed Enrico Fermi Unit 3 Nuclear Power Plant
BY: Detroit Edison Company (Peter Smith)
Lake Eerie, FRENCHTOWN Township, MONROE County, MI
10-58-11
12/2011
Sheet 33 of 63

FIGURE 14-2B NEW OPERATIONS ACCESS ROAD TYPICAL SECTION FOR CURB AND GUTTER TYPICAL SECTION AND DETAIL PROFILE SEDIMENT TRAP

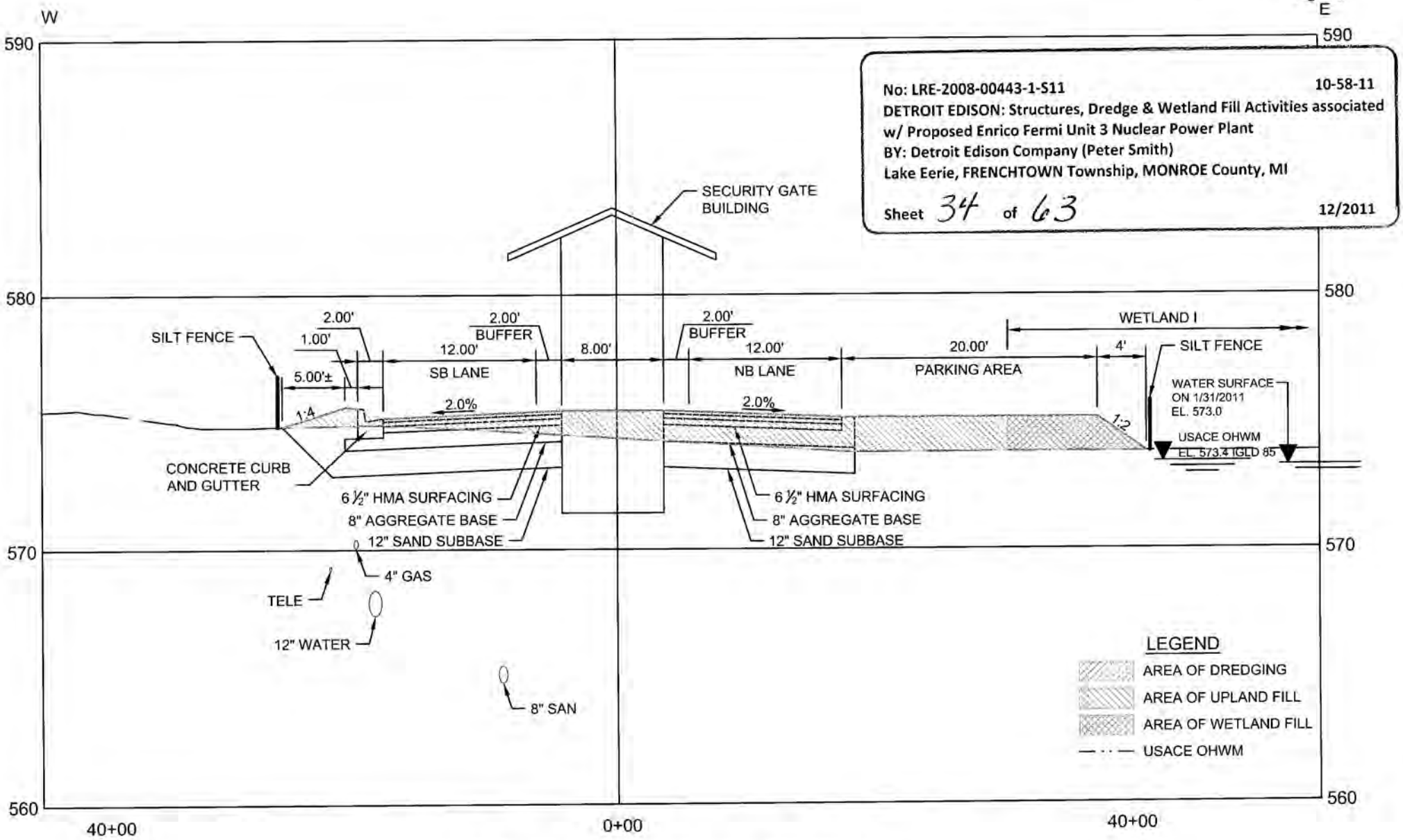

A SECURITY GATE SECTION

SCALE: 1"=10' HORZ.; 1"=5' VERT. (IGLD 85 DATUM)

FIGURE 14-2C NEW OPERATIONS ACCESS ROAD SECURITY GATE SECTION 'A' DETAILS

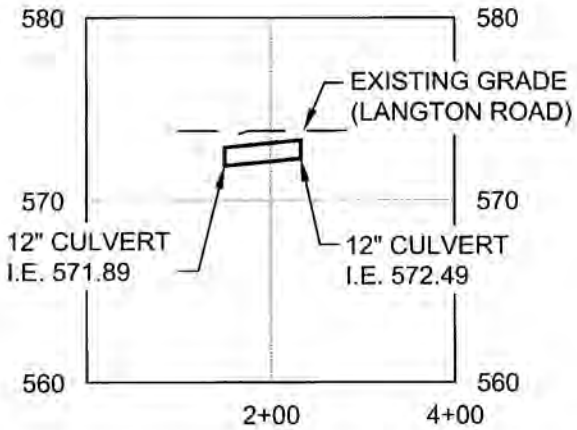

PROFILE OF PROPOSED CULVERT A (LOOKING NORTHWEST)

SCALE: 1"=200' HORZ.;1"=20' VERT. (IGLD 85 DATUM)

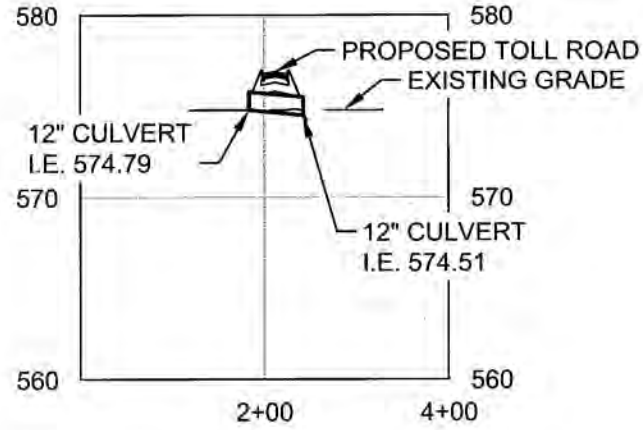

PROFILE OF PROPOSED CULVERT C (LOOKING EAST)

SCALE: 1"=200' HORZ.;1"=20' VERT. (IGLD 85 DATUM)

No: LRE-2008-00443-1-S11
DETROIT EDISON: Structures, Dredge & Wetland Fill Activities associated w/ Proposed Enrico Fermi Unit 3 Nuclear Power Plant
BY: Detroit Edison Company (Peter Smith)
Lake Eerie, FRENCHTOWN Township, MONROE County, MI
Sheet 35 of 63
12/2011
10-58-11

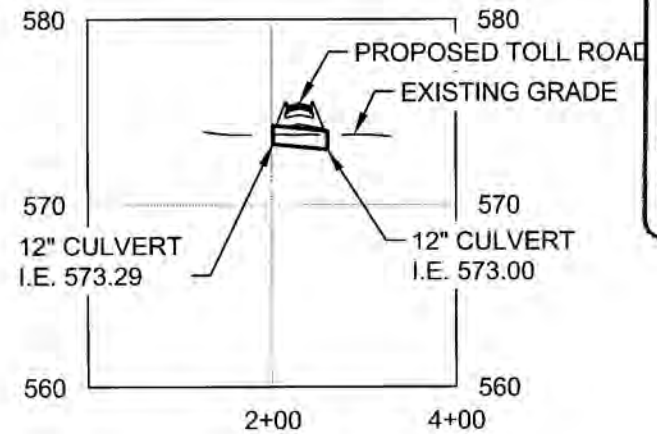

PROFILE OF PROPOSED CULVERT B (LOOKING EAST)

SCALE: 1"=200' HORZ.;1"=20' VERT. (IGLD 85 DATUM)

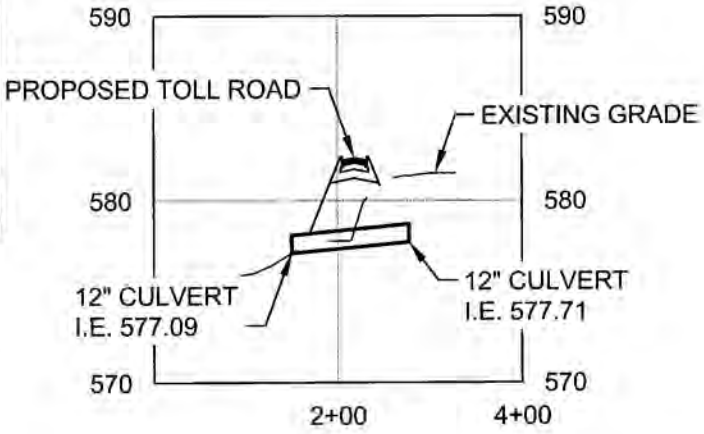

PROFILE OF PROPOSED CULVERT D (LOOKING NORTHWEST)

SCALE: 1"=200' HORZ.;1"=20' VERT. (IGLD 85 DATUM)

FIGURE 14-2D NEW OPERATIONS ACCESS ROAD PROFILE OF PROPOSED CULVERTS A - D

No: LRE-2008-00443-1-S11 10-58-11
DETROIT EDISON: Structures, Dredge & Wetland Fill Activities associated w/ Proposed Enrico Fermi Unit 3 Nuclear Power Plant
BY: Detroit Edison Company (Peter Smith)
Lake Eerie, FRENCHTOWN Township, MONROE County, MI
Sheet 36 of 63 12/2011

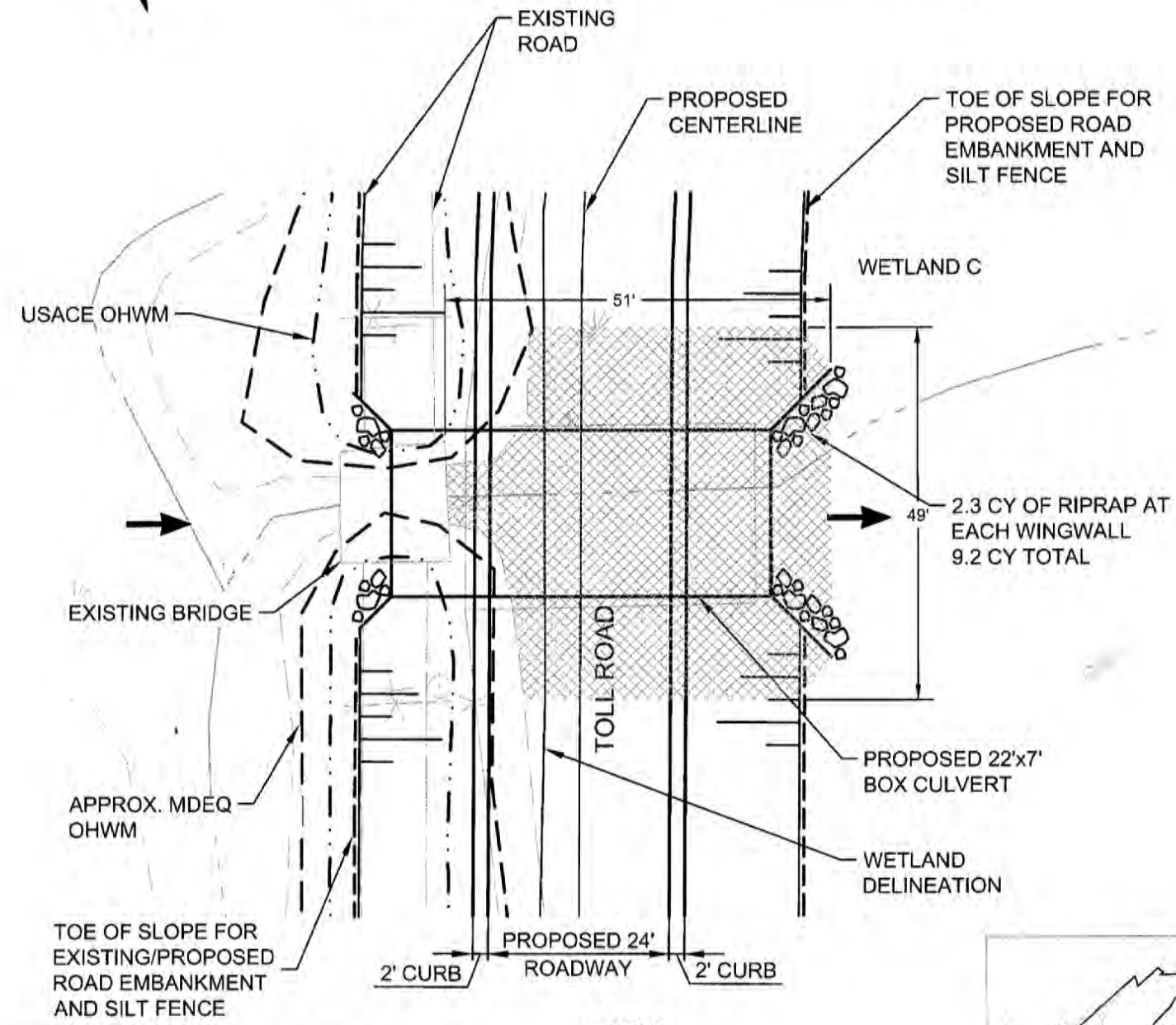

DIRECTION OF DITCH AND SURFACE WATER FLOW

LEGEND
- AREA OF WETLAND FILL
- CONTOURS
- SILT FENCE
- WETLAND LIMIT
- USACE OHWM
- APPROX. MDEQ OHWM

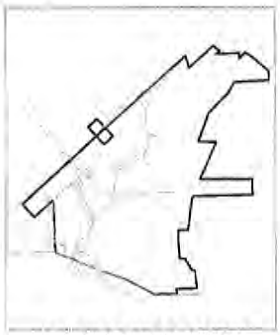

LOCATION MAP

NOTE:
NO PROPOSED WETLAND IMPACTS ALONG NORTHWESTERLY EDGE OF ROAD.

WETLAND C IMPACTS, BOX CULVERT ONLY
USACE OHWM DREDGE = 400 CY
USACE WETLAND FILL = 580 CY
APPROX. MDEQ OHWM DREDGE = 340 CY
APPROX. MDEQ OHWM FILL = 580 CY

FIGURE 14-2E
NEW OPERATIONS ACCESS ROAD 22'x7' BOX CULVERT PLAN VIEW

SCALE: 1"=20'
Revision 1

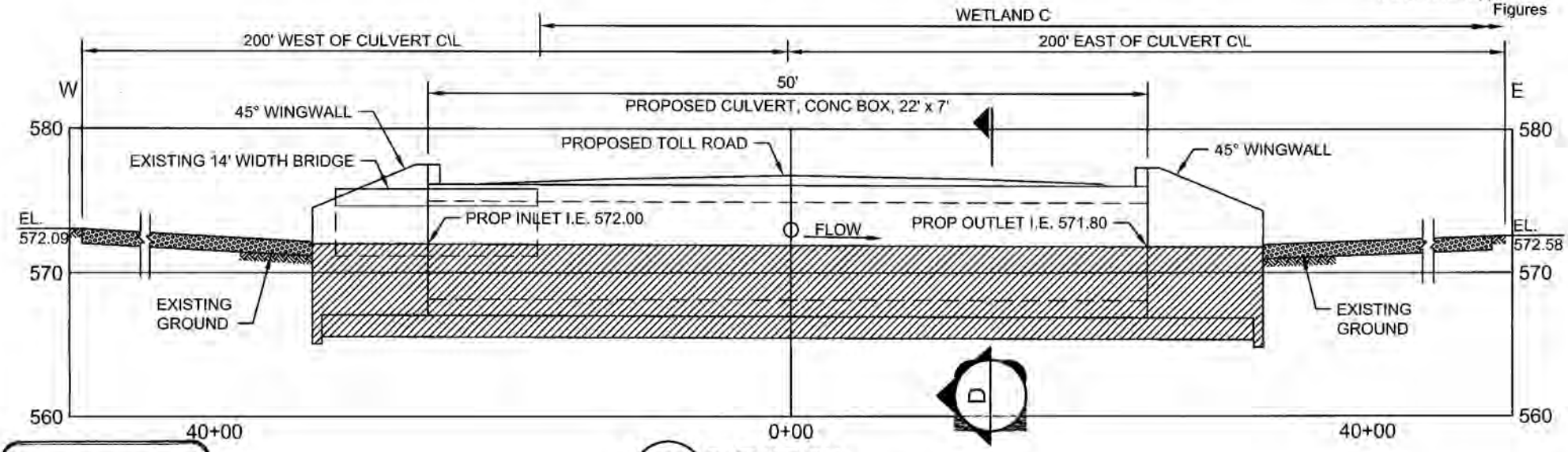

B ELEVATION
SCALE: 1"=10' (IGLD 85 DATUM)

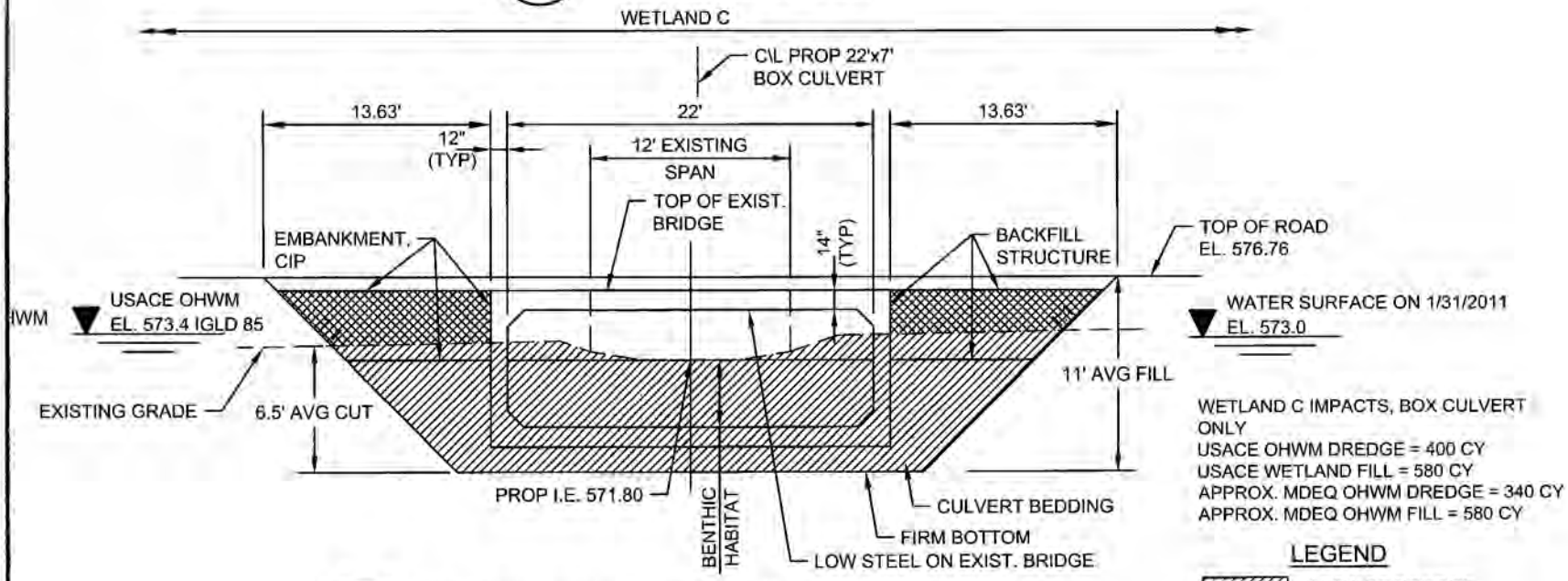

WETLAND C IMPACTS, BOX CULVERT ONLY
USACE OHWM DREDGE = 400 CY
USACE WETLAND FILL = 580 CY
APPROX. MDEQ OHWM DREDGE = 340 CY
APPROX. MDEQ OHWM FILL = 580 CY

LEGEND
AREA OF DREDGE
AREA OF WETLAND FILL

D SECTION VIEW (LOOKING WEST)
SCALE: 1"=10' (IGLD 85 DATUM)

No: LRE-2008-00443-1-S11
DETROIT EDISON: Structures, Dredge & Wetland Fill Activities associated w/ Proposed Enrico Fermi Unit 3 Nuclear Power Plant
BY: Detroit Edison Company (Peter Smith)
Lake Eerie, FRENCHTOWN Township, MONROE County, MI
Sheet 37 of 63
10-58-11
12/2011

FIGURE 14-2F NEW OPERATIONS ACCESS ROAD ELEVATION 'B' AND SECTION 'D' DETAILS

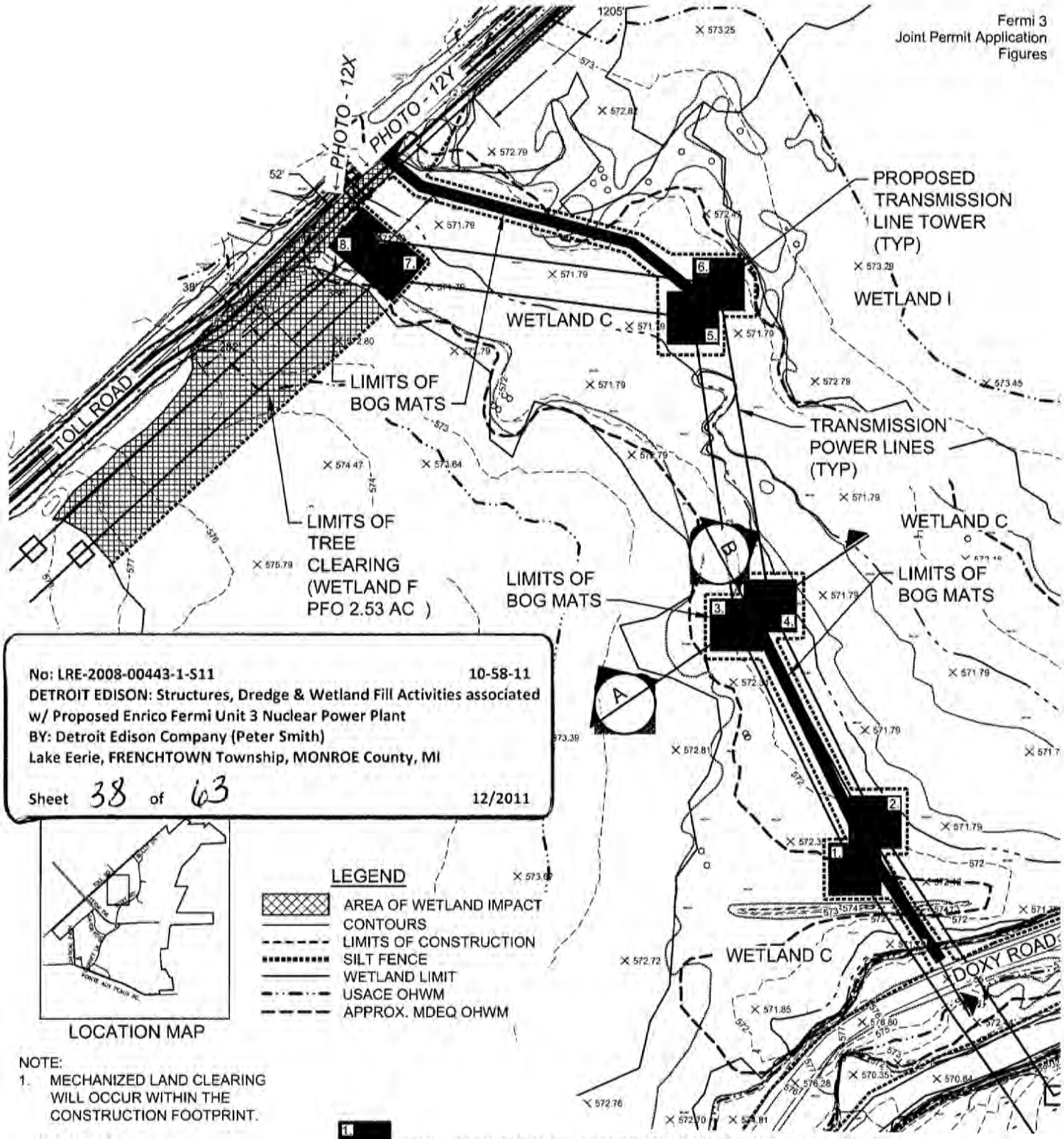

NOTE:
1. MECHANIZED LAND CLEARING WILL OCCUR WITHIN THE CONSTRUCTION FOOTPRINT.

WETLAND C
AREA = 0.24 acres
USACE OHWM DREDGE = 768 CY
USACE OHWM EXCAVATION = NA
WETLAND EXCAVATION = 768 CY
WETLAND FILL = 768 CY

1. TEMPORARY (T) TOWER FOOTPRINT = 0.2 X 8 TOWERS = 1.60 ACRES
(T) LIMITS OF BOG MATS FOOTPRINT = 0.34 ACRES
(T) LIMITS OF BOG MATS FOOTPRINT = 0.35 ACRES
TOTAL TEMPORARY IMPACTS = 2.29 ACRES

36' 36' PERMANENT (P) TOWER FOOTPRINT = 0.03 X 8 TOWERS = 0.24 ACRES
(P) OVERHEAD TRANSMISSION LINE CLEARANCE FOOTPRINT = 2.53 ACRES

FIGURE 12-9A ONSITE TRANSMISSION PLAN VIEW

SCALE: 1"=250'

No: LRE-2008-00443-1-511
DETROIT EDISON: Structures, Dredge & Wetland Fill Activities associated w/ Proposed Enrico Fermi Unit 3 Nuclear Power Plant
BY: Detroit Edison Company (Peter Smith)
Lake Eerie, FRENCHTOWN Township, MONROE County, MI
Sheet 39 of 63
12/2011
10-58-11

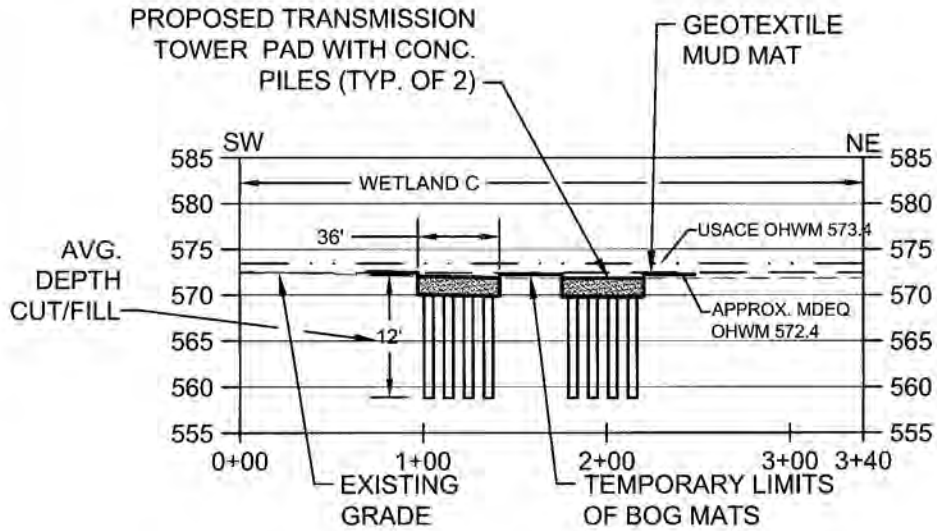

A ONSITE TRANSMISSION SECTION
SCALE: 1"=100' H, 1"=20' V (IGLD 85 DATUM)

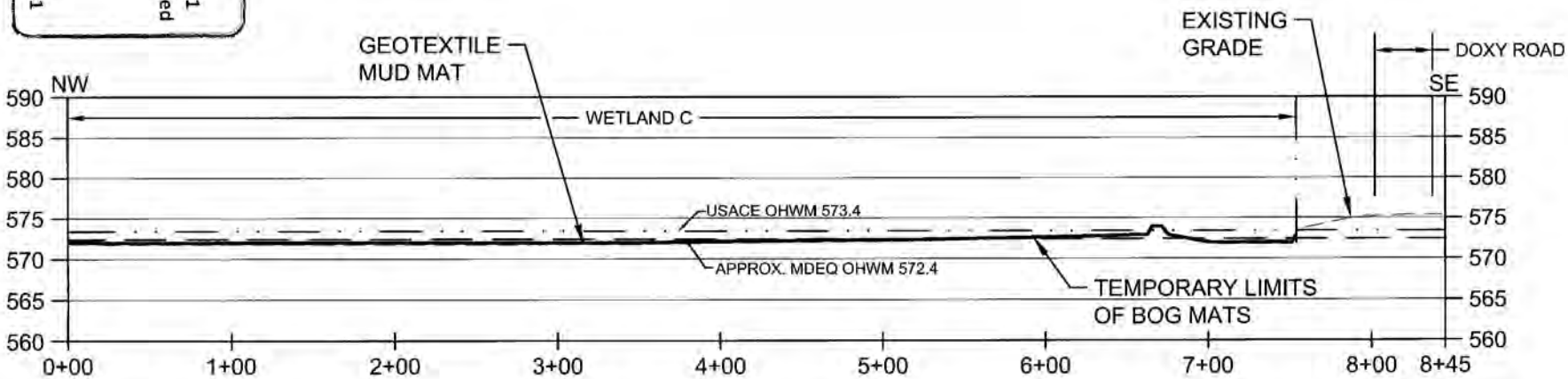

B ONSITE TRANSMISSION SECTION
SCALE: 1"=100' H, 1"=20' V (IGLD 85 DATUM)

LEGEND
USACE OHWM
APPROX. MDEQ OHWM

FIGURE 12-9B ONSITE TRANSMISSION SECTION DETAILS

No: LRE-2008-00443-1-S11 10-58-11
DETROIT EDISON: Structures, Dredge & Wetland Fill Activities associated w/ Proposed Enrico Fermi Unit 3 Nuclear Power Plant
BY: Detroit Edison Company (Peter Smith)
Lake Eerie, FRENCHTOWN Township, MONROE County, MI
Sheet 40 of 63 12/2011

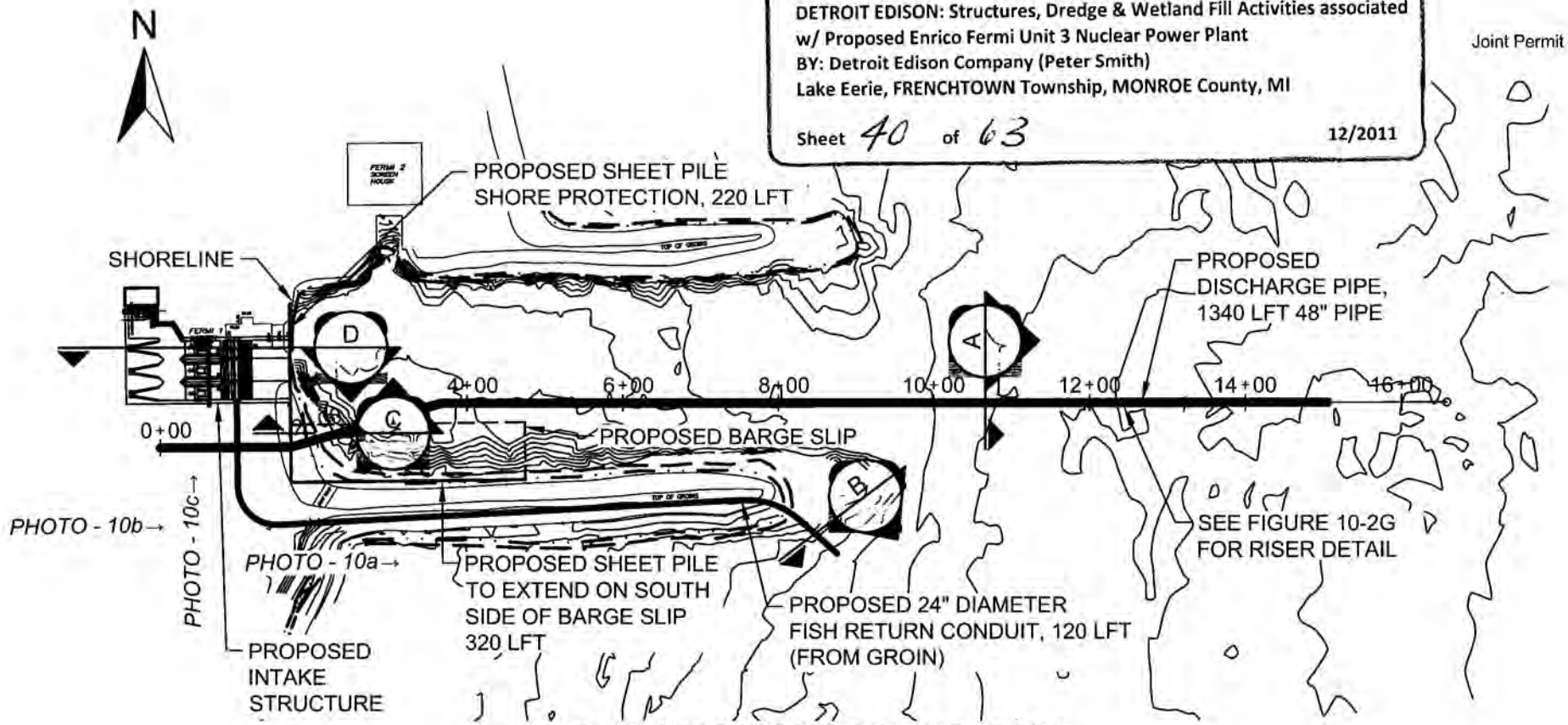

PLAN OF PROPOSED DISCHARGE PIPE

SCALE: 1"=200'

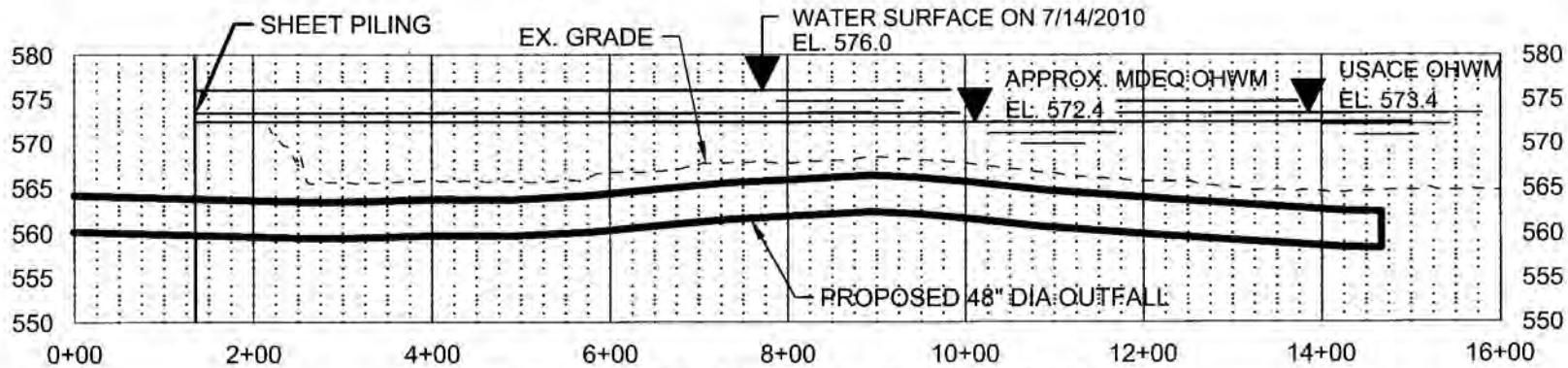

PROFILE OF PROPOSED FERMI 3 DISCHARGE PIPE

SCALE: 1"=200' HORZ.; 1"=20' VERT. (IGLD 85 DATUM)

LEGEND

- USACE OHWM
- APPROX. MDEQ OHWM
- PROPOSED BARGE SLIP LIMITS

FIGURE 10-2A LAKE ERIE CONSTRUCTION AREA PLAN AND PROFILE OF PROPOSED DISCHARGE PIPE

No: LRE-2008-00443-1-S11 10-58-11
DETROIT EDISON: Structures, Dredge & Wetland Fill Activities associated w/ Proposed Enrico Fermi Unit 3 Nuclear Power Plant
BY: Detroit Edison Company (Peter Smith)
Lake Eerie, FRENCHTOWN Township, MONROE County, MI
Sheet 41 of 63 12/2011

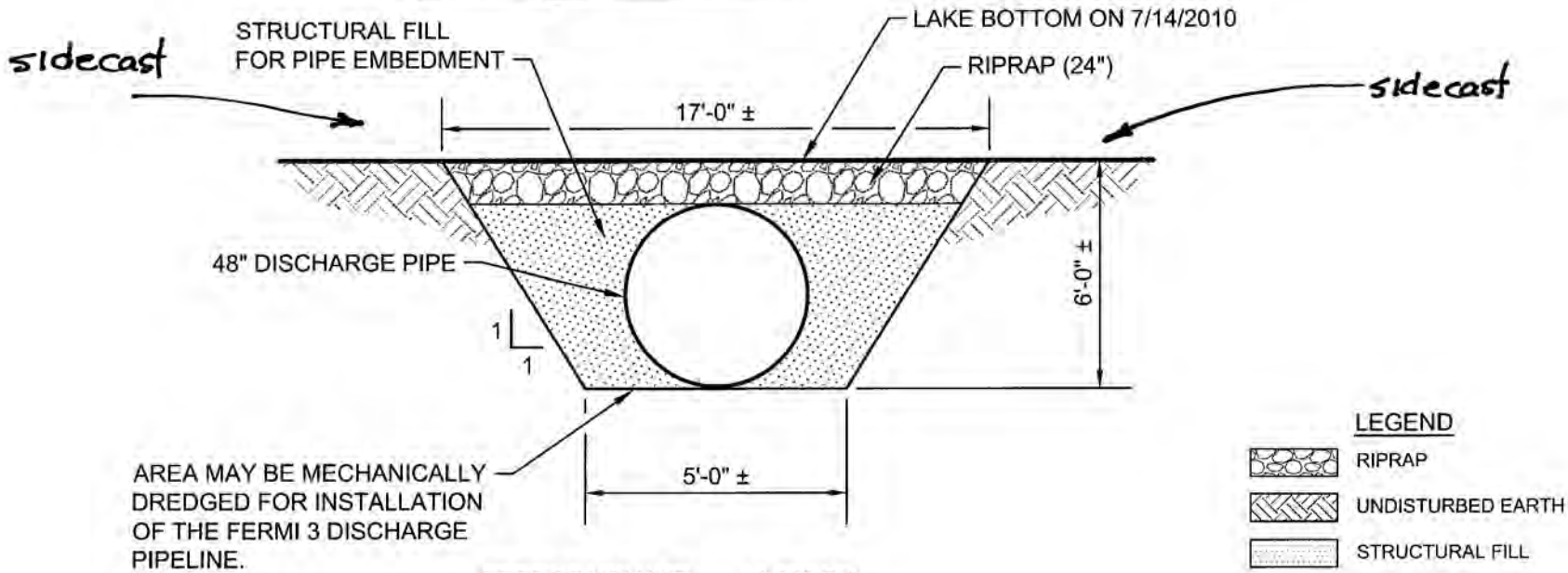

DREDGE VOLUME:	3,300 CY
SIDECAST VOLUME:	3,300 CY
STONE BACKFILL VOLUME:	970 CY
RIPRAP VOLUME:	1,690 CY
PIPE LENGTH:	1,340 LFT

NOTE:
1. ONLY OUTSIDE MATERIALS WILL BE THE PIPE, RIPRAP AND STONE.
2. ALL WORK BELOW MDEQ AND USACE OHWM.

A DISCHARGE PIPE DREDGING CROSS SECTION
SCALE: NONE

FIGURE 10-2B LAKE ERIE CONSTRUCTION AREA DISCHARGE PIPE DREDGING SECTION 'A' DETAILS

No: LRE-2008-00443-1-S11 10-58-11
DETROIT EDISON: Structures, Dredge & Wetland Fill Activities associated w/ Proposed Enrico Fermi Unit 3 Nuclear Power Plant
BY: Detroit Edison Company (Peter Smith)
Lake Eerie, FRENCHTOWN Township, MONROE County, MI
Sheet 42 of 63 12/2011

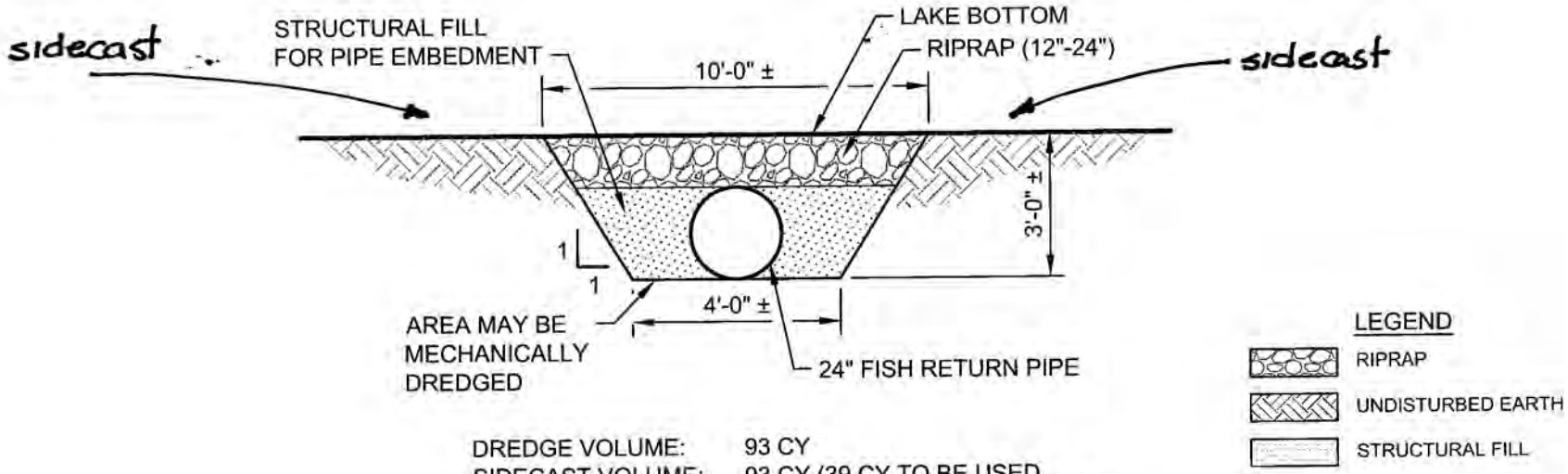

DREDGE VOLUME: 93 CY
SIDECAST VOLUME: 93 CY (39 CY TO BE USED TO BACKFILL TRENCH)
RIPRAP VOLUME: 40 CY
PIPE LENGTH: 120 LFT

NOTE:
1. ONLY OUTSIDE MATERIALS WILL BE THE PIPE AND RIPRAP.
2. ALL WORK BELOW APPROX. MDEQ AND USACE OHWM.

B PIPE DREDGING CROSS SECTION (AT FISH RETURN LOCATION)
SCALE: NONE

FIGURE 10-2C LAKE ERIE CONSTRUCTION AREA PIPE DREDGING SECTION 'B' DETAILS

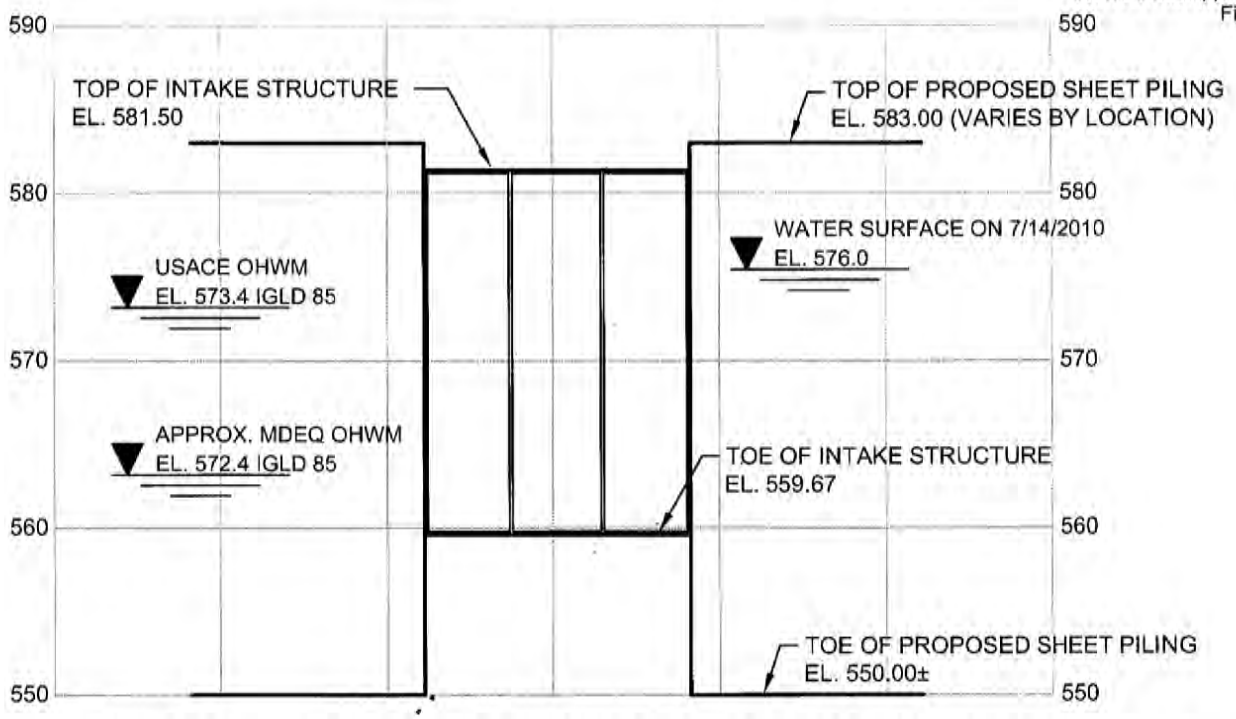

INTAKE CROSS SECTION ALONG SHORELINE

SCALE: 1"=60' HORZ.; 1"=10' VERT. (IGLD 85 DATUM)

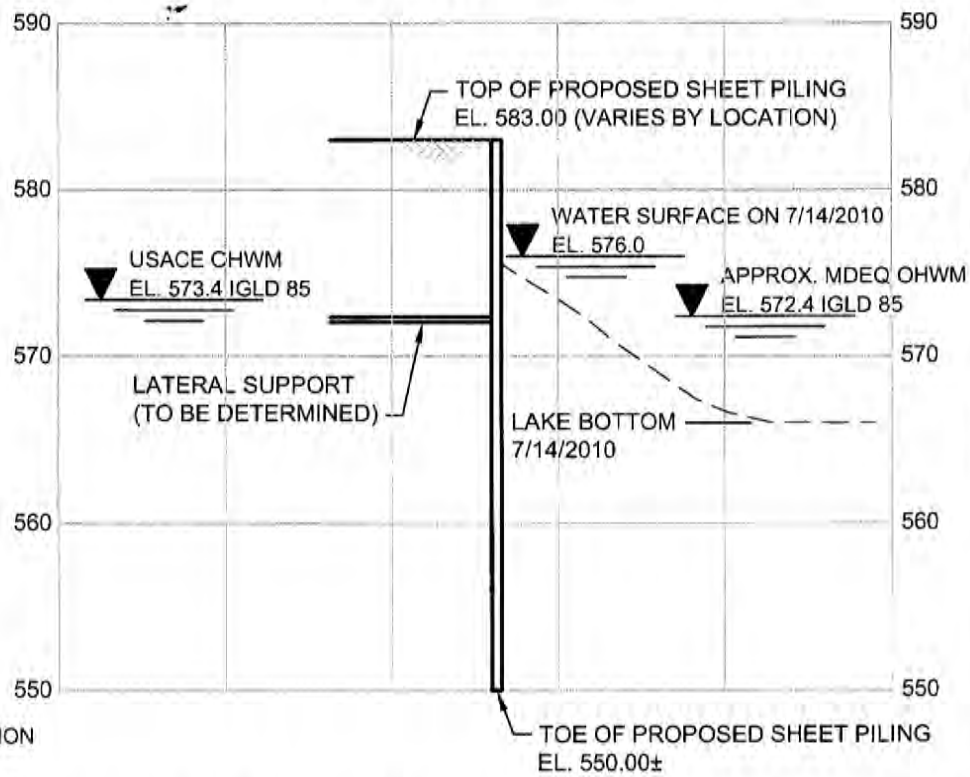

LEGEND

WATER ELEVATION

EXISTING GROUND

10-58-11
No: LRE-2008-00443-1-S11
DETROIT EDISON: Structures, Dredge & Wetland Fill Activities associated w/ Proposed Enrico Fermi Unit 3 Nuclear Power Plant
BY: Detroit Edison Company (Peter Smith)
Lake Eerie, FRENCHTOWN Township, MONROE County, MI
12/2011
Sheet 43 of 63

C CROSS SECTION OF PROPOSED SHEET PILING

SCALE: 1"=10' VERT. (IGLD 85 DATUM)

FIGURE 10-2D LAKE ERIE CONSTRUCTION AREA INTAKE AND PROPOSED SHEET PILING SECTION DETAILS

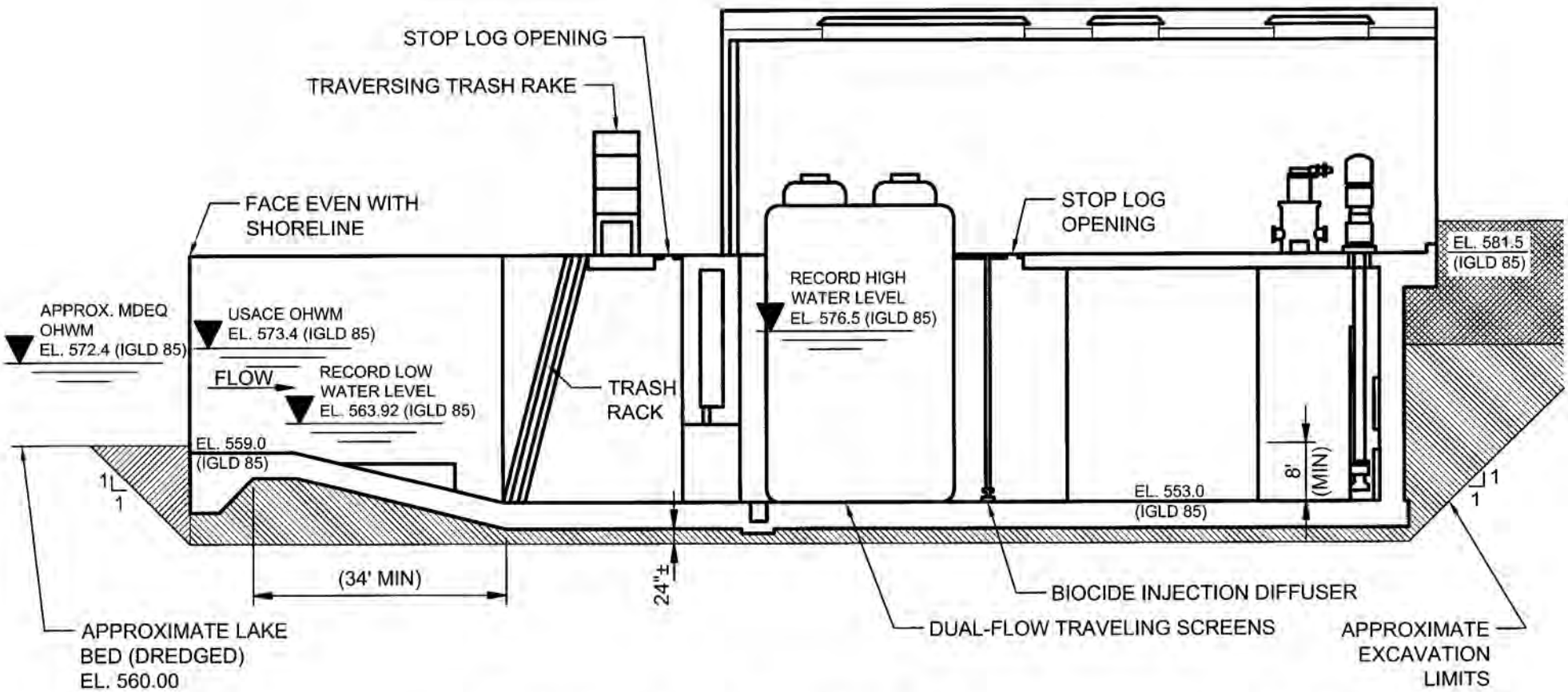

LEGEND

- LAKE AREA DREDGE
- DREDGE
- UPLAND BACKFILL

D PROPOSED INTAKE STRUCTURE (LOOKING SOUTH)

SCALE: 1"=20' (IGLD 85 DATUM)

VOLUMES BELOW APPROX. MDEQ OHWM

DREDGE VOLUME:	16,100 CY
LAKE AREA DREDGE VOLUME:	300 CY
STRUCTURE VOLUME:	10,900 CY
BACKFILL VOLUME:	5,500 CY

VOLUMES BELOW USACE OHWM

DREDGE VOLUME:	16,600 CY
LAKE AREA DREDGE VOLUME:	300 CY
STRUCTURE VOLUME:	11,300 CY
BACKFILL VOLUME:	5,600 CY

FIGURE 10-2E LAKE ERIE CONSTRUCTION AREA PROPOSED INTAKE STRUCTURE SECTION 'D' DETAILS

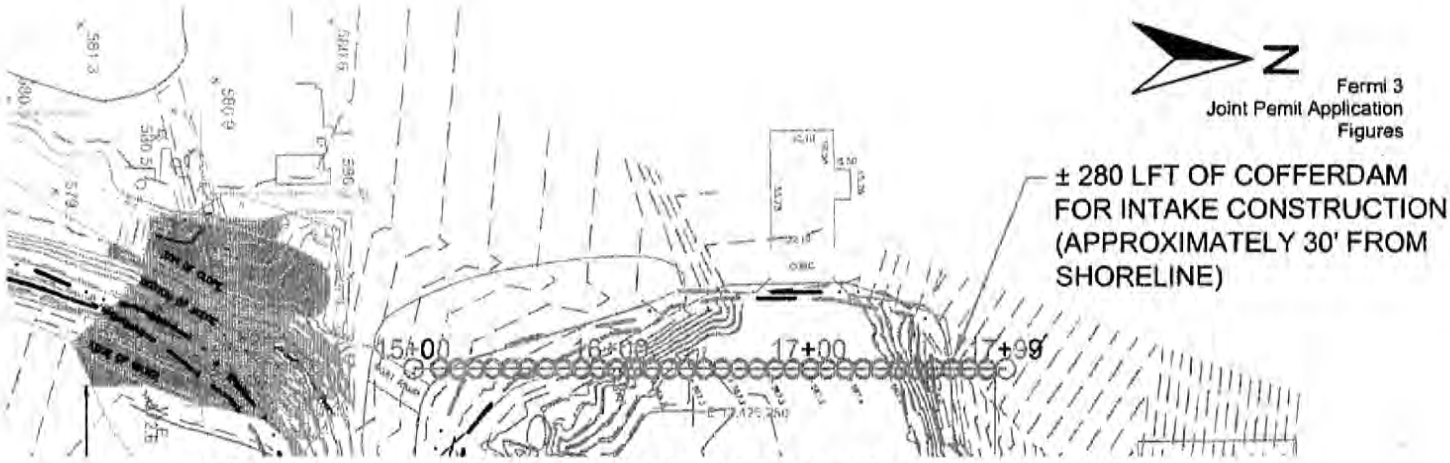

PROPOSED TEMPORARY COFFERDAM AT INTAKE STRUCTURE

SCALE: 1"=100'

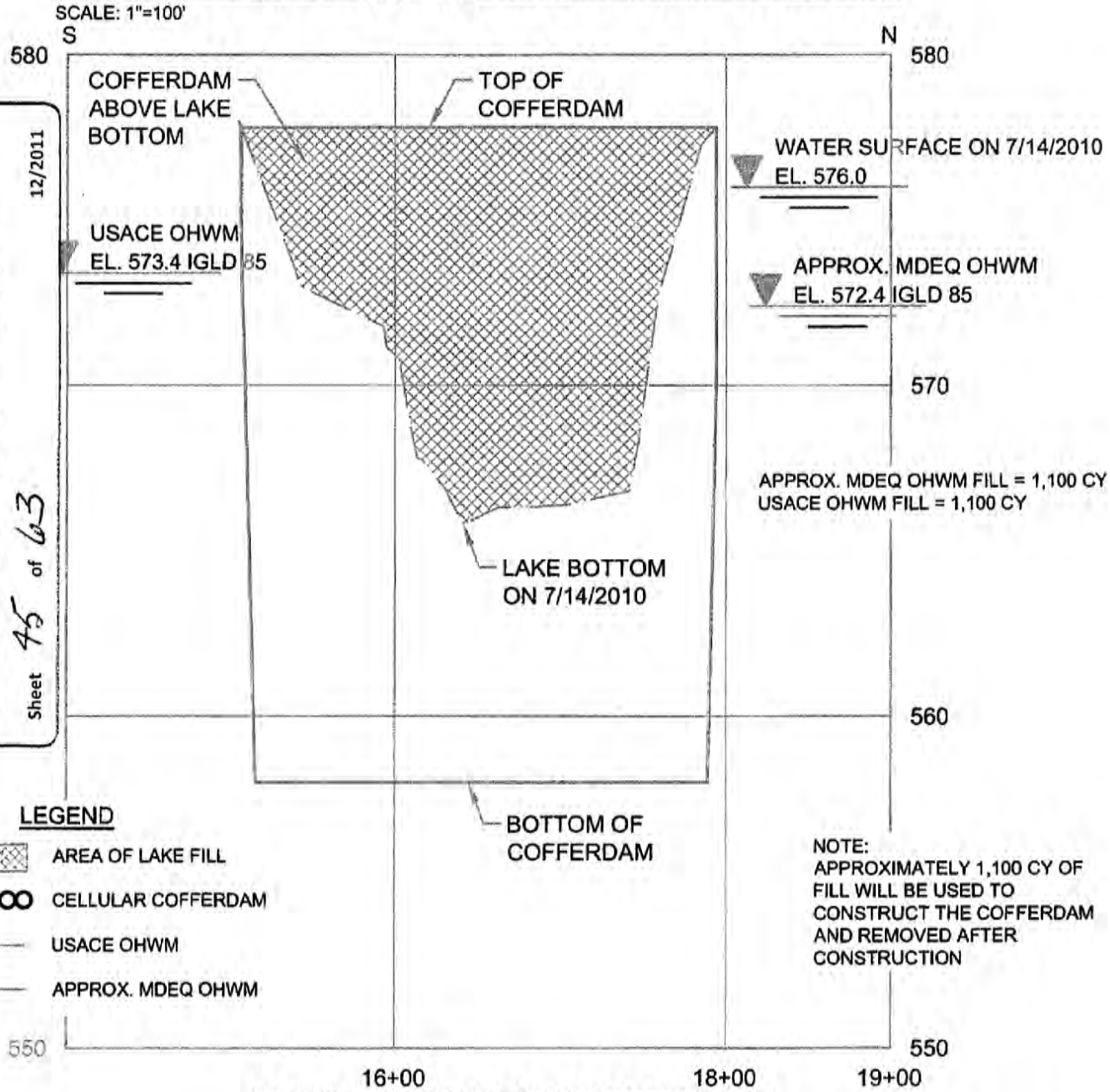

LEGEND

- AREA OF LAKE FILL
- CELLULAR COFFERDAM
- USACE OHWM
- APPROX. MDEQ OHWM

NOTE:
APPROXIMATELY 1,100 CY OF FILL WILL BE USED TO CONSTRUCT THE COFFERDAM AND REMOVED AFTER CONSTRUCTION

PROFILE OF TEMPORARY COFFERDAM

SCALE: 1"=100' HORZ.; 1"=5' VERT. (IGLD 85 DATUM)

No: LRE-2008-00443-1-S11
DETROIT EDISON: Structures, Dredge & Wetland Fill Activities associated w/ Proposed Enrico Fermi Unit 3 Nuclear Power Plant
BY: Detroit Edison Company (Peter Smith)
Lake Eerie, FRENCHTOWN Township, MONROE County, MI
Sheet 45 of 63
12/2011
10-58-11

FIGURE 10-2F LAKE ERIE CONSTRUCTION AREA PROPOSED COFFERDAM

No: LRE-2008-00443-1-S11 10-58-11
DETROIT EDISON: Structures, Dredge & Wetland Fill Activities associated w/ Proposed Enrico Fermi Unit 3 Nuclear Power Plant
BY: Detroit Edison Company (Peter Smith)
Lake Eerie, FRENCHTOWN Township, MONROE County, MI
Sheet 46 of 63 12/2011

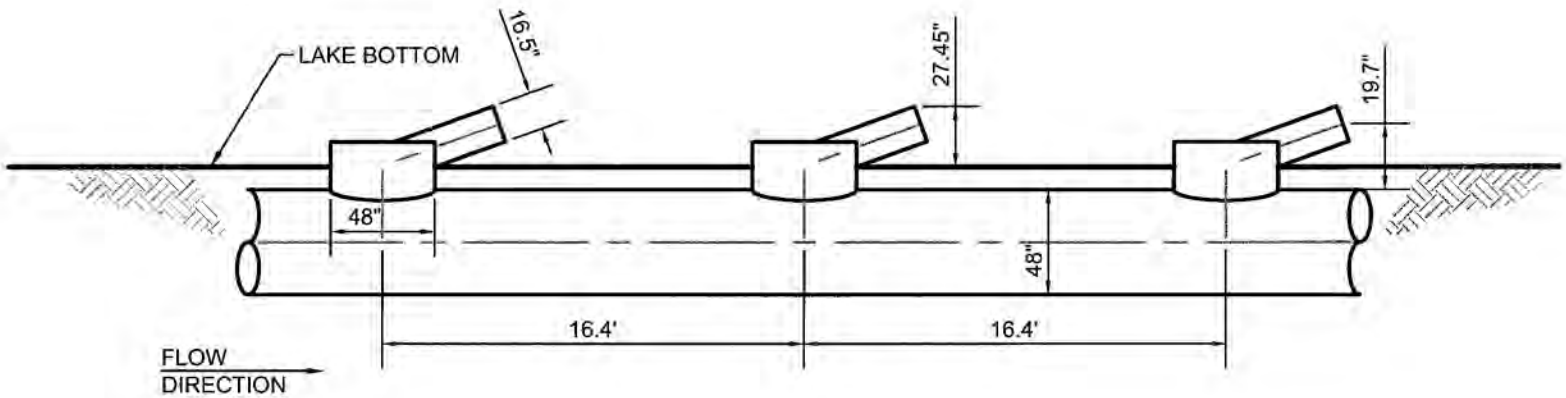

NOTE:
TYPICAL RISER DETAIL ALONG DISCHARGE PIPE

10-2G LAKE ERIE CONSTRUCTION AREA PROPOSED DISCHARGE PIPE RISER DETAIL

SCALE: NONE

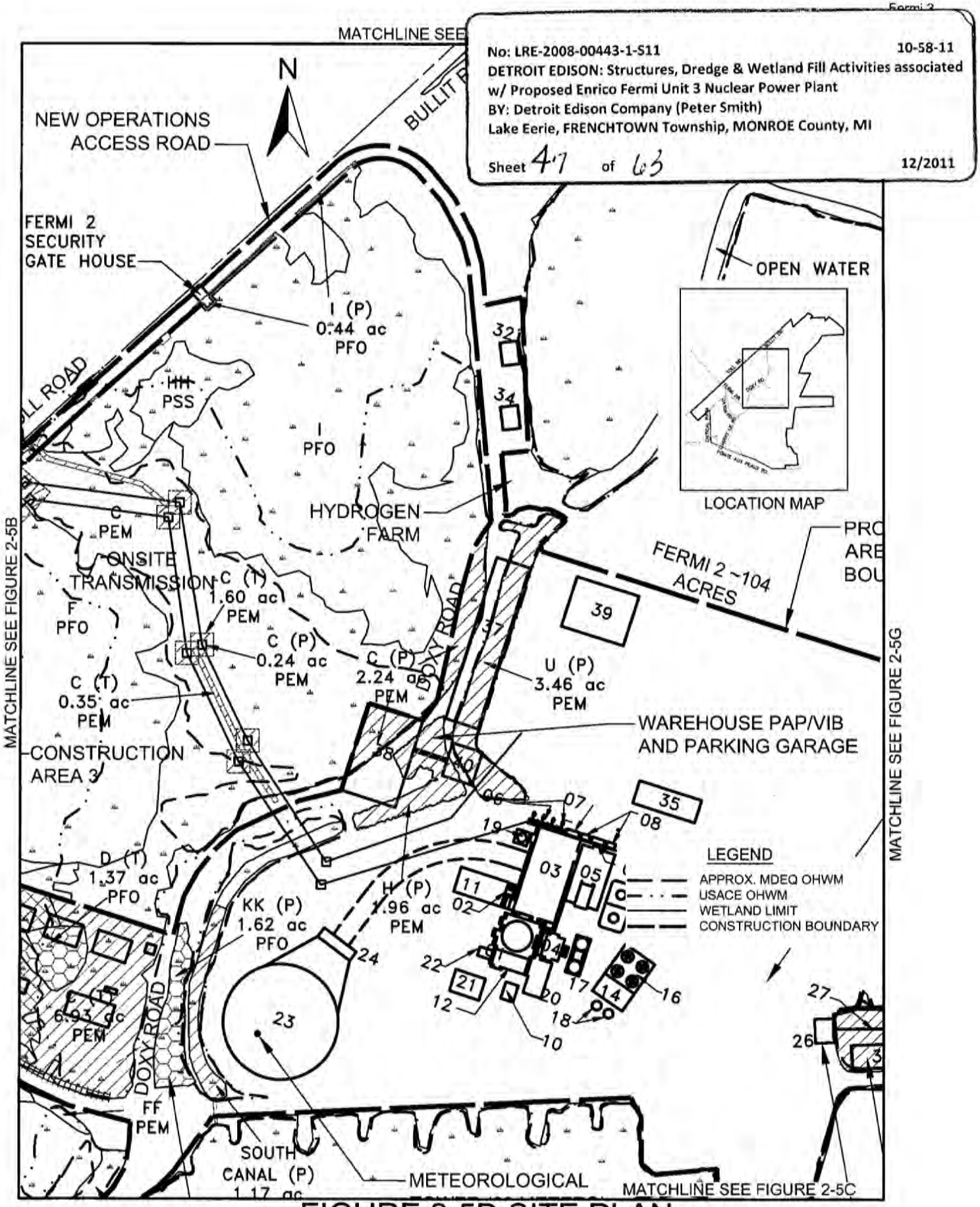

FIGURE 2-5D SITE PLAN

SCALE: 1"=500'

S61

TURBIDITY CURTAIN

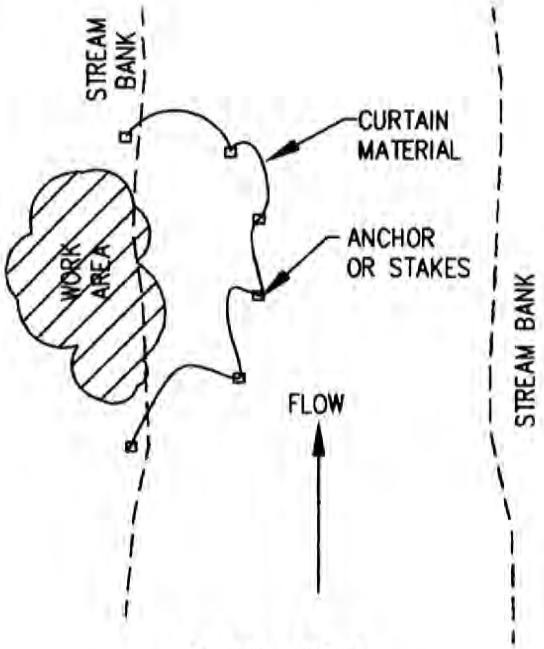

PLAN VIEW

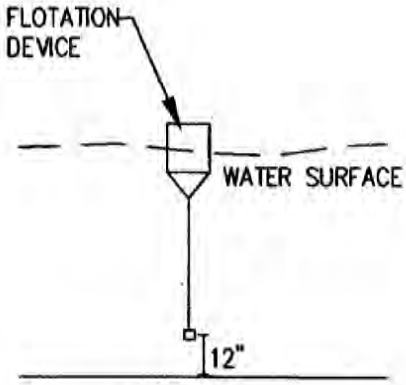

PROFILE

No: LRE-2008-00443-1-S11 10-58-11
DETROIT EDISON: Structures, Dredge & Wetland Fill Activities associated w/ Proposed Enrico Fermi Unit 3 Nuclear Power Plant
BY: Detroit Edison Company (Peter Smith)
Lake Eerie, FRENCHTOWN Township, MONROE County, MI
Sheet 48 of 63 12/2011

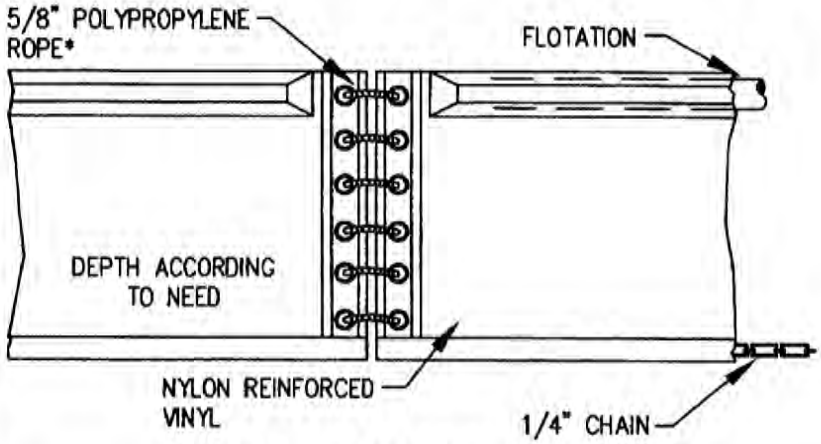

* JOINTS VARY DEPENDING ON TYPE OF WATERBODY AND VELOCITY OF WATERFLOW.

PROFILE - CURTAIN DETAIL

TYPICAL

NOTES:
TYPE OF TURBIDITY CURTAIN TO BE DETERMINED BY A QUALIFIED ENGINEER or CPESC.

STANDARD SYMBOL

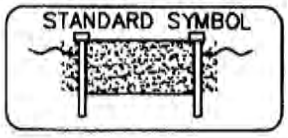

ADAPTED FROM:
AERO-FLO CANVAS PRODUCTS, INC.

MICHIGAN DEPARTMENT OF MANAGEMENT AND BUDGET

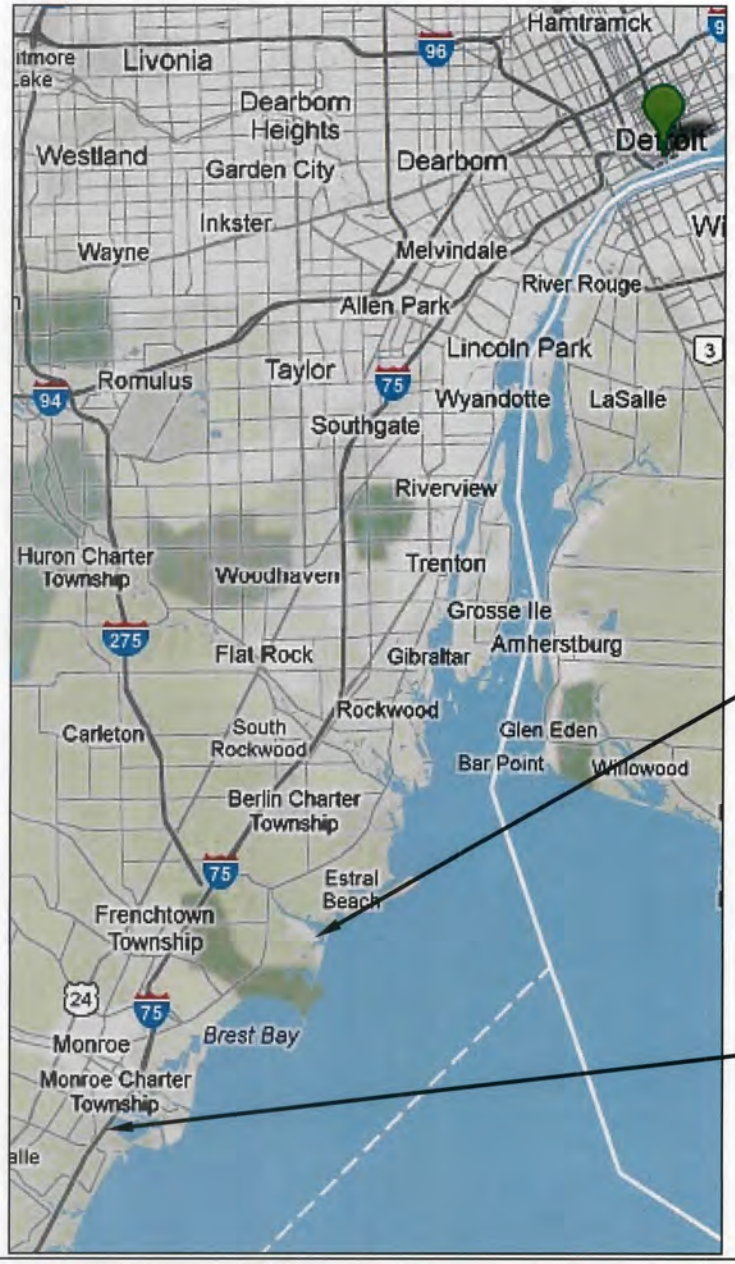

PROPOSED FERMI 3 LOCATION

MITIGATION SITE LOCATION

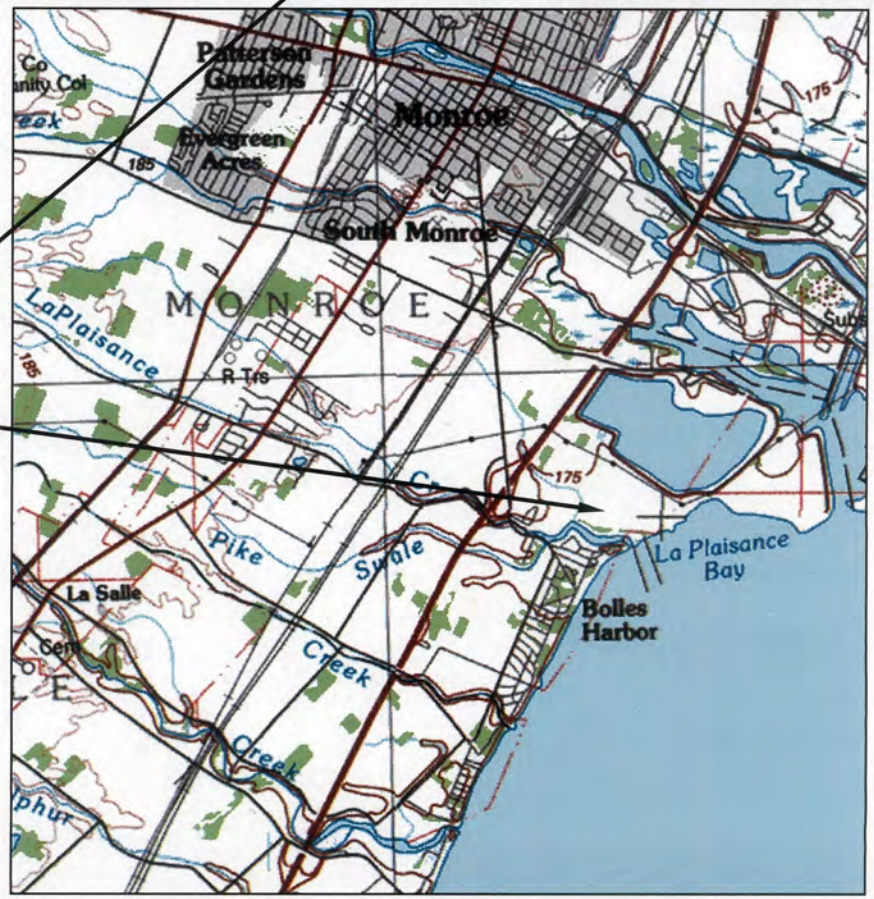

No: LRE -2008-00443-1-S11 10-58-11

DETROIT EDISON: Structures, Dredge & Wetland Fill Activities associated w/Proposed Enrico Fermi Unit 3 Nuclear Power Plant

BY: Detroit Edison Company (Peter Smith)

Lake Erie, FRENCHTOWN Township, MONROE County, MI

SHEET 49 OF 63 12/2011

No: LRE-2008-00443-1-S11 10-58-11
DETROIT EDISON: Structures, Dredge & Wetland Fill Activities associated w/ Proposed Enrico Fermi Unit 3 Nuclear Power Plant
BY: Detroit Edison Company (Peter Smith)
Lake Eerie, FRENCHTOWN Township, MONROE County, MI
Sheet 50 of 63 12/2011

LEGEND

WETLAND LIMITS
USACE OHWM - ELEV 573.4
APPROXIMATE BOUNDARY LINE

ELEV DATUM: IGLD 1985

OVERALL SITE PLAN

NO SCALE

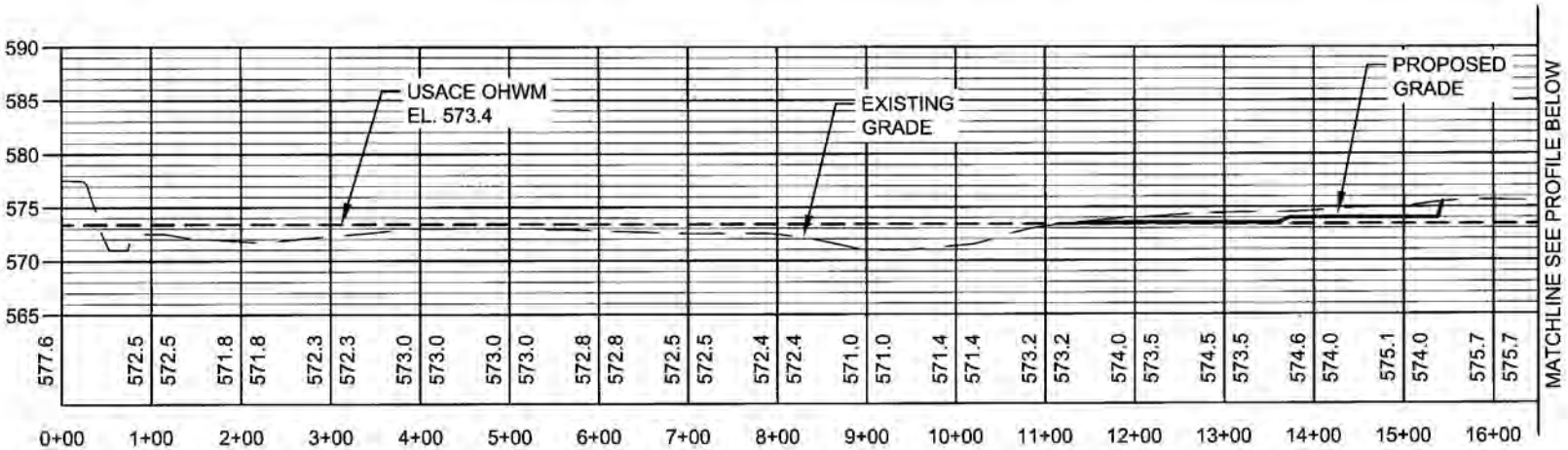

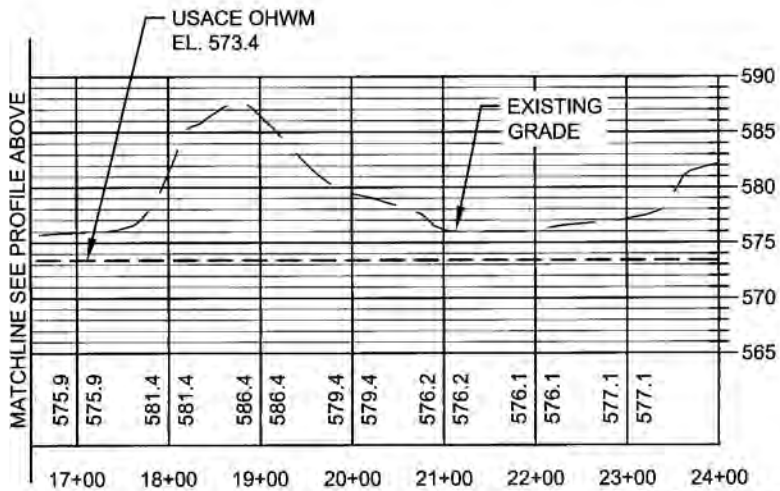

A

SECTION

SCALE: 1"=200' H, 1"=10' V

No: LRE-2008-00443-1-S11 10-58-11

DETROIT EDISON: Structures, Dredge & Wetland Fill Activities associated w/ Proposed Enrico Fermi Unit 3 Nuclear Power Plant

BY: Detroit Edison Company (Peter Smith)

Lake Eerie, FRENCHTOWN Township, MONROE County, MI

Sheet 51 of 63

12/2011

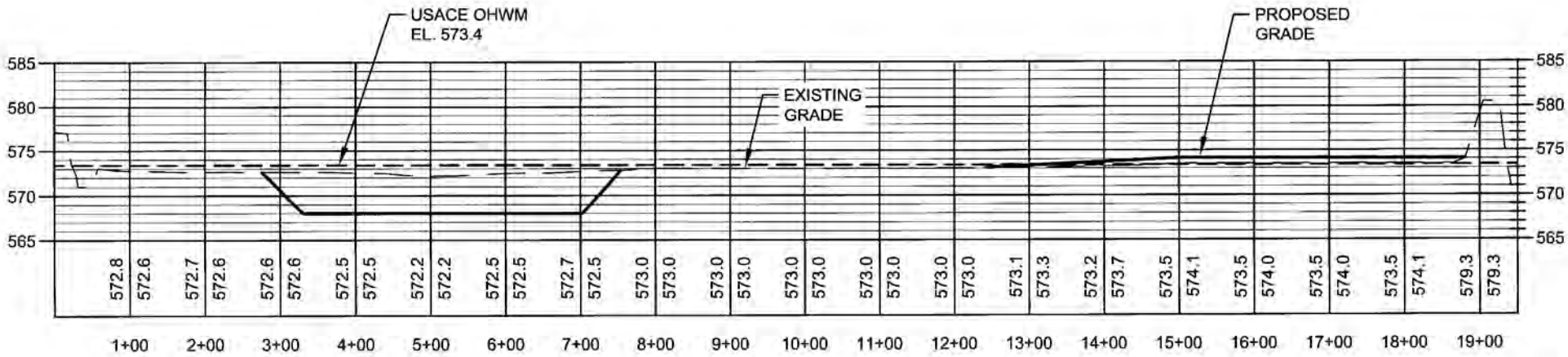

B

SECTION

SCALE: 1"=200' H, 1"=10' V

No: LRE-2008-00443-1-S11 10-58-11

DETROIT EDISON: Structures, Dredge & Wetland Fill Activities associated w/ Proposed Enrico Fermi Unit 3 Nuclear Power Plant

BY: Detroit Edison Company (Peter Smith)

Lake Eerie, FRENCHTOWN Township, MONROE County, MI

Sheet 52 of 63 12/2011

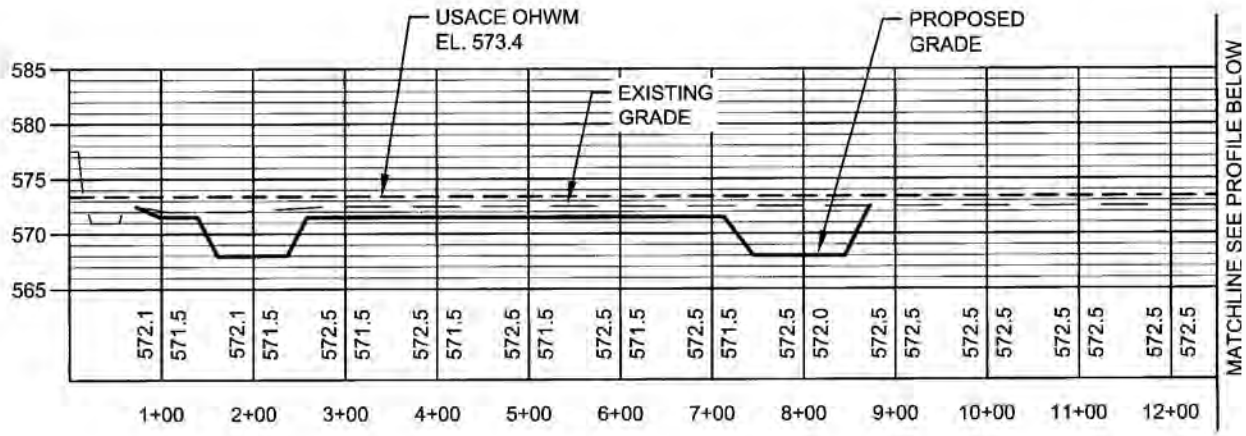

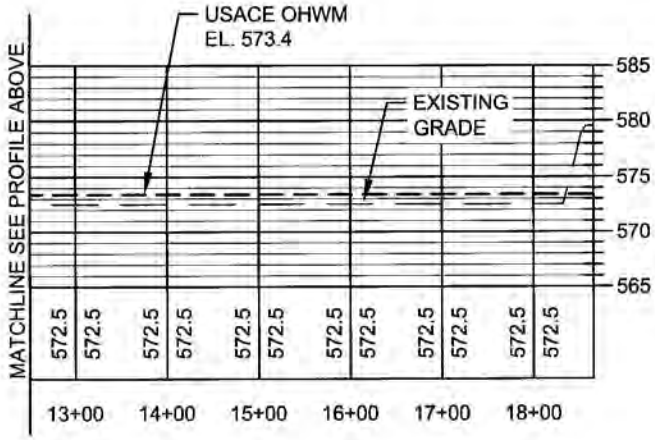

C

SECTION

SCALE: 1"=200' H, 1"=10' V

No: LRE-2008-00443-1-S11 10-58-11

DETROIT EDISON: Structures, Dredge & Wetland Fill Activities associated w/ Proposed Enrico Fermi Unit 3 Nuclear Power Plant

BY: Detroit Edison Company (Peter Smith)

Lake Eerie, FRENCHTOWN Township, MONROE County, MI

Sheet 53 of 63 12/2011

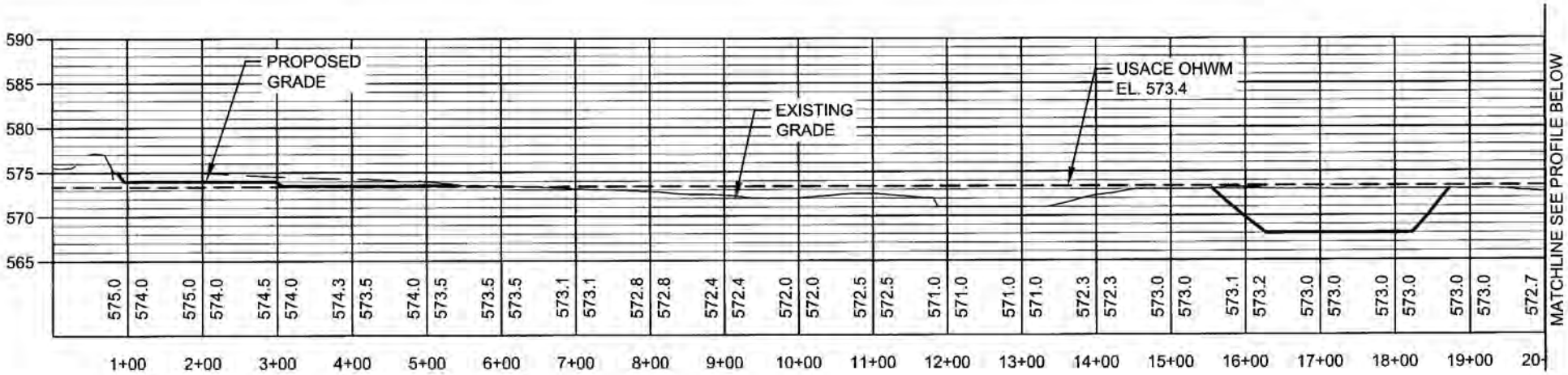

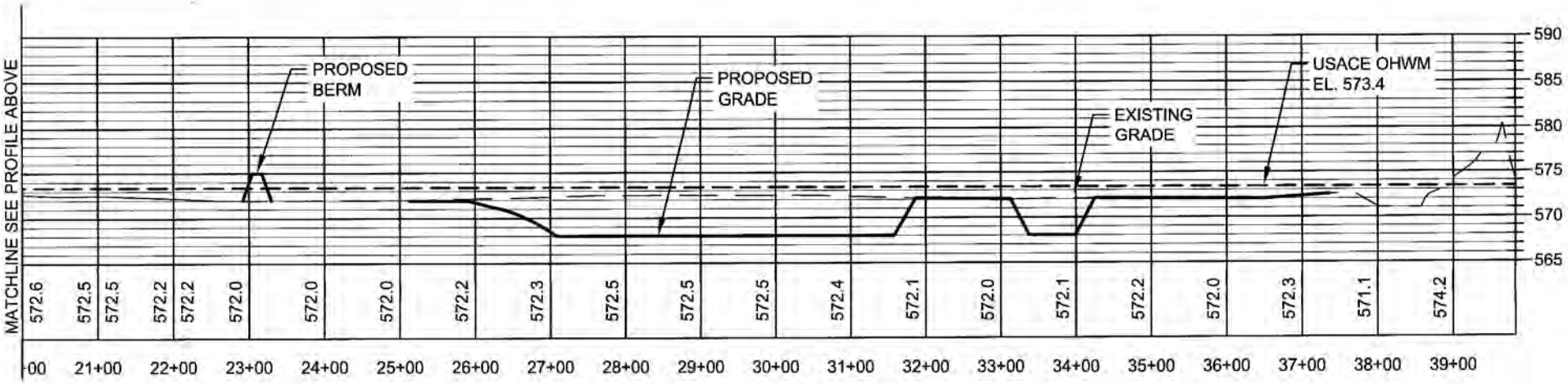

D

SECTION

SCALE: 1"=200' H, 1"=10' V

No: LRE-2008-00443-1-S11 10-58-11

DETROIT EDISON: Structures, Dredge & Wetland Fill Activities associated w/ Proposed Enrico Fermi Unit 3 Nuclear Power Plant

BY: Detroit Edison Company (Peter Smith)

Lake Eerie, FRENCHTOWN Township, MONROE County, MI

Sheet 54 of 63 12/2011

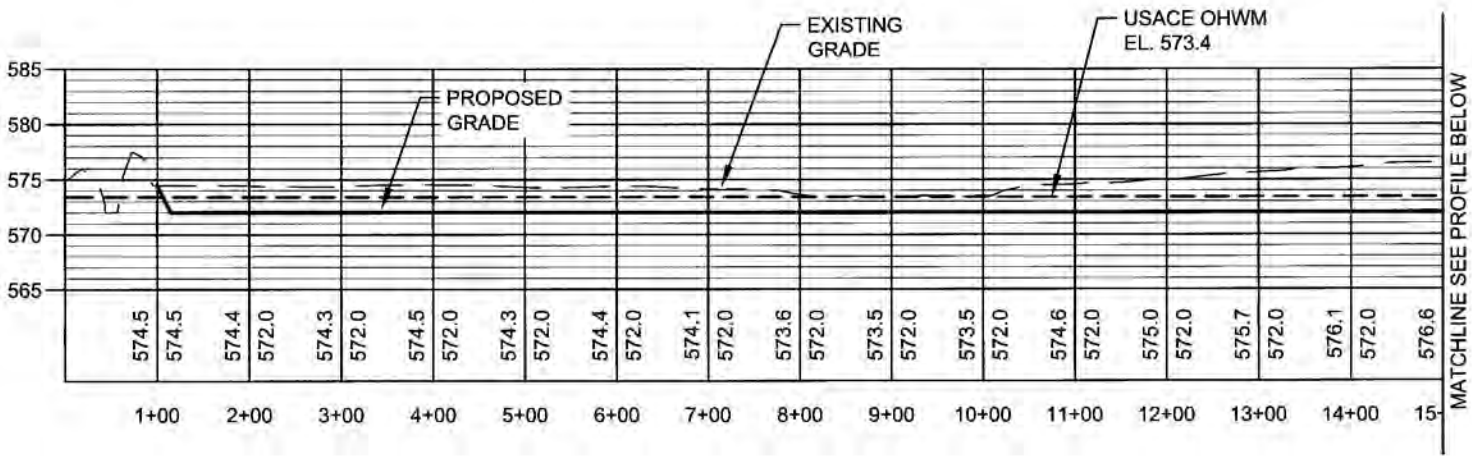

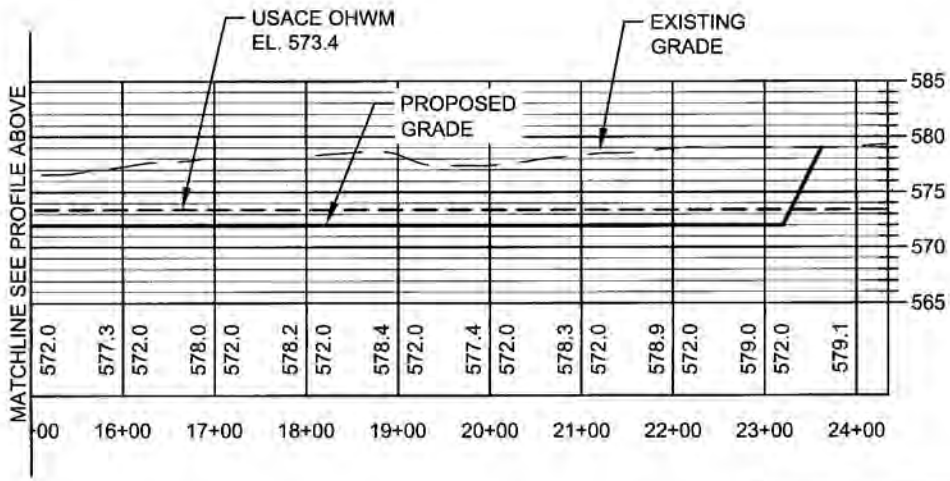

E

SECTION

SCALE: 1"=200' H, 1"=10' V

No: LRE-2008-00443-1-S11 10-58-11

DETROIT EDISON: Structures, Dredge & Wetland Fill Activities associated w/ Proposed Enrico Fermi Unit 3 Nuclear Power Plant

BY: Detroit Edison Company (Peter Smith)

Lake Eerie, FRENCHTOWN Township, MONROE County, MI

Sheet 55 of 63 12/2011

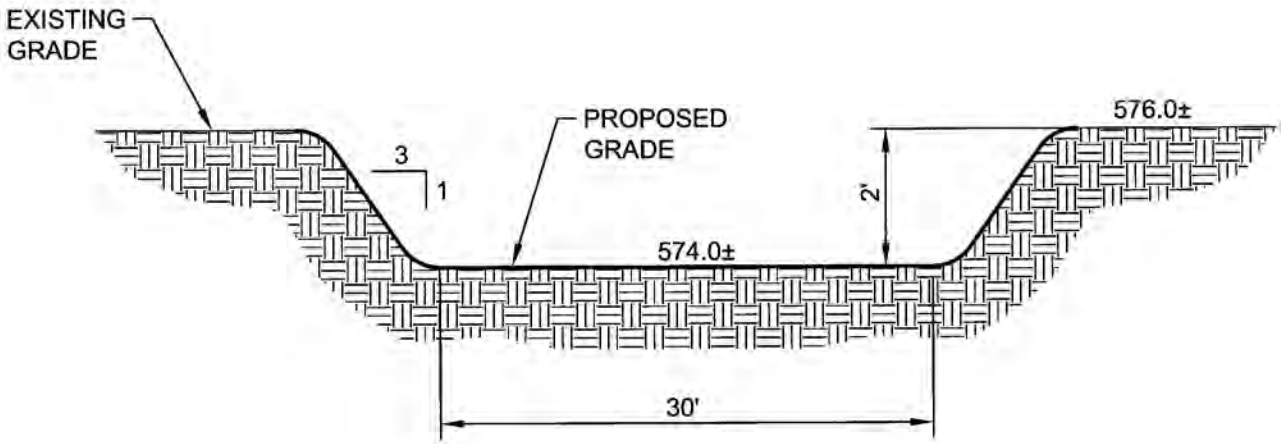

FIGURE 1 - DAVIS DRAIN OVERFLOW TO SITE

NO SCALE

No: LRE-2008-00443-1-S11 10-58-11
DETROIT EDISON: Structures, Dredge & Wetland Fill Activities associated w/ Proposed Enrico Fermi Unit 3 Nuclear Power Plant
BY: Detroit Edison Company (Peter Smith)
Lake Eerie, FRENCHTOWN Township, MONROE County, MI
Sheet 56 of 63 12/2011

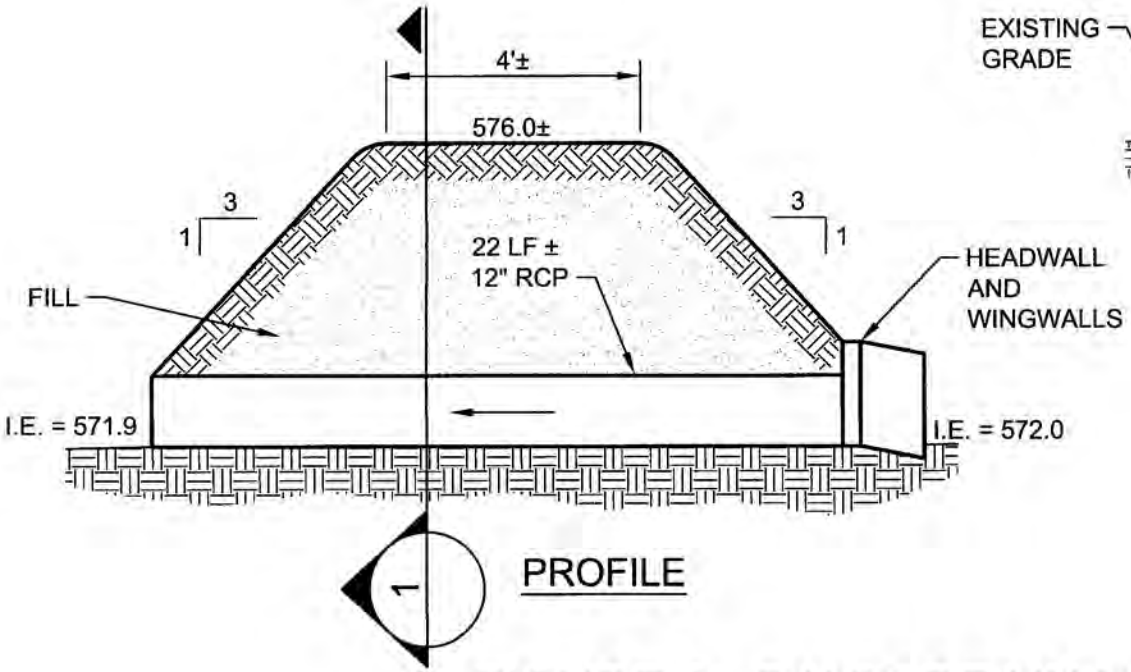

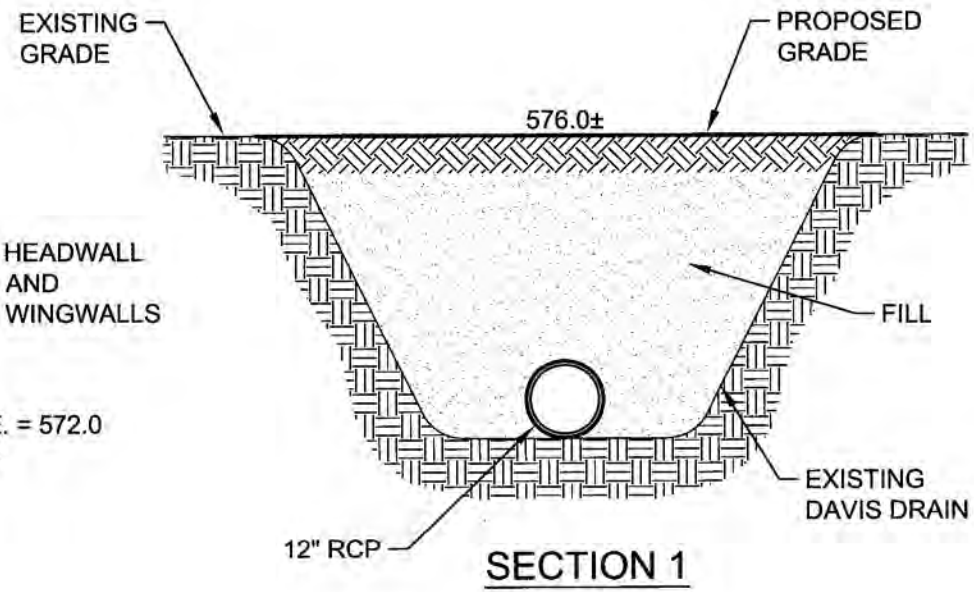

FIGURE 2 - DAVIS DRAIN LOW FLOW CULVERT

NO SCALE

No: LRE-2008-00443-1-S11 10-58-11
DETROIT EDISON: Structures, Dredge & Wetland Fill Activities associated w/ Proposed Enrico Fermi Unit 3 Nuclear Power Plant
BY: Detroit Edison Company (Peter Smith)
Lake Eerie, FRENCHTOWN Township, MONROE County, MI

Sheet 57 of 63 12/2011

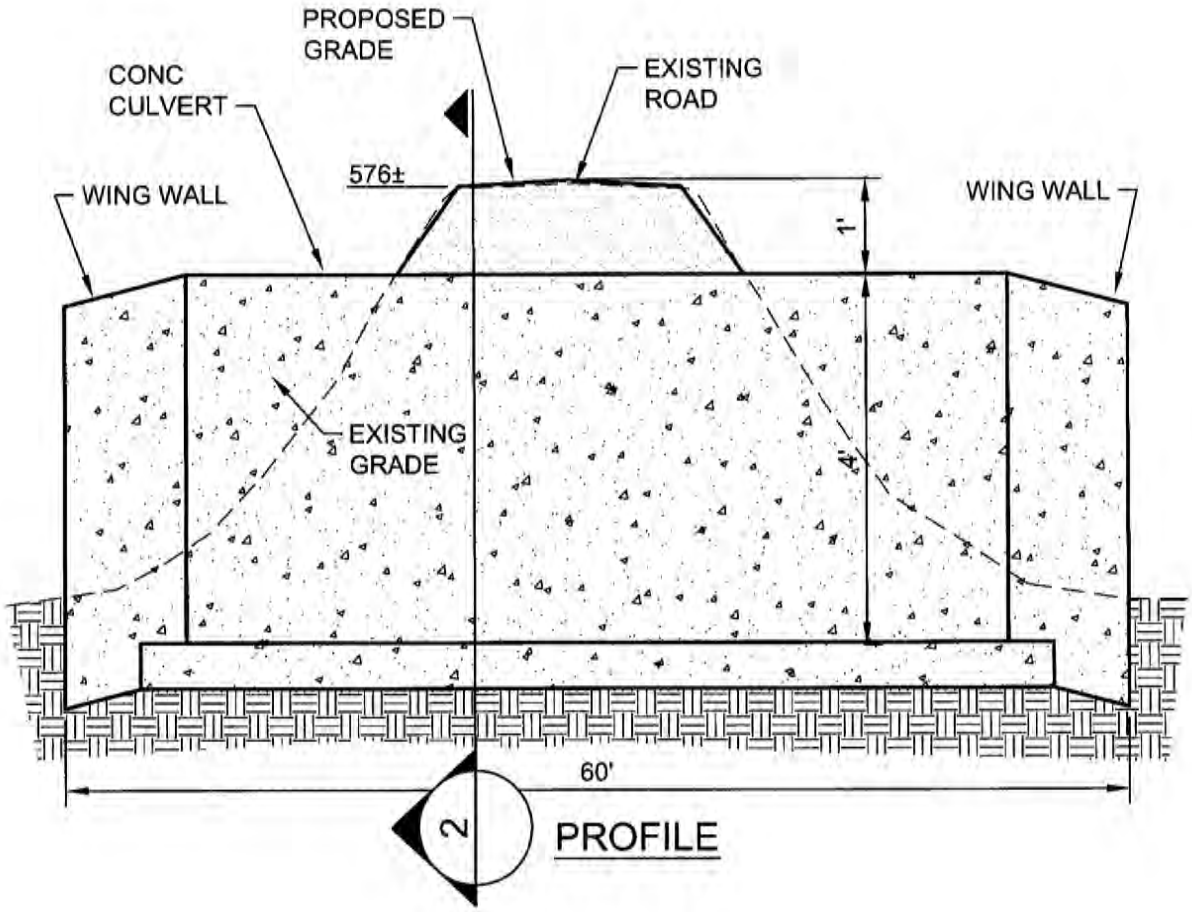

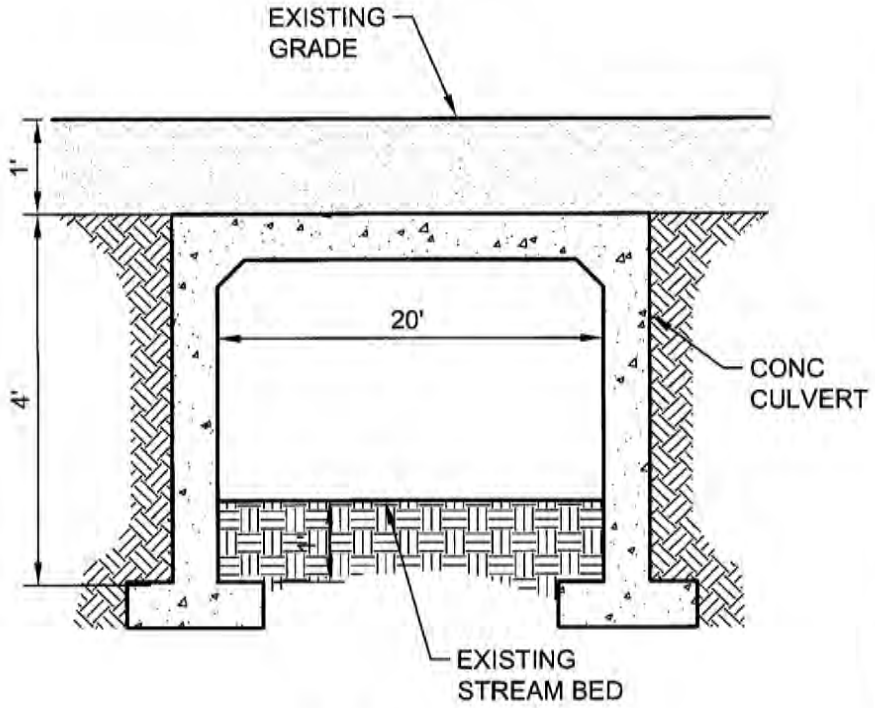

SECTION 2

FIGURE 3 - DAVIS DRAIN OVERFLOW 3-SIDED CULVERT

NO SCALE

No: LRE-2008-00443-1-S11 10-58-11
DETROIT EDISON: Structures, Dredge & Wetland Fill Activities associated
w/ Proposed Enrico Fermi Unit 3 Nuclear Power Plant
BY: Detroit Edison Company (Peter Smith)
Lake Eerie, FRENCHTOWN Township, MONROE County, MI
Sheet 58 of 63 12/2011

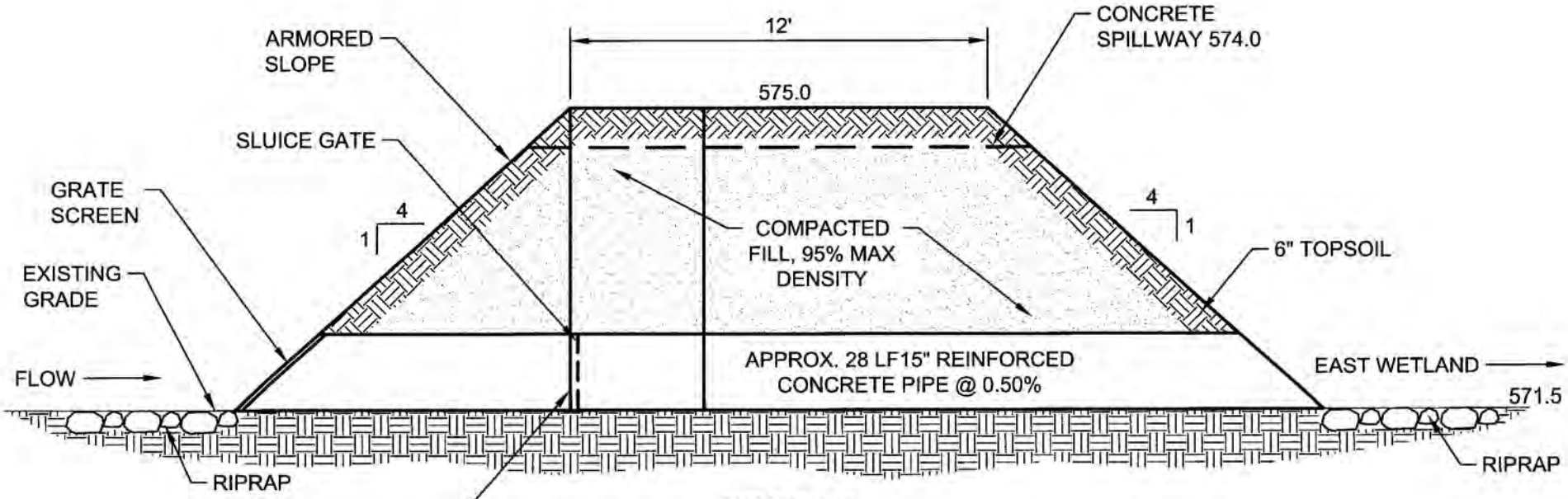

PROFILE

FIGURE 4 - PROPOSED BERM DETAIL

NO SCALE

No: LRE-2008-00443-1-S11 10-58-11
DETROIT EDISON: Structures, Dredge & Wetland Fill Activities associated w/ Proposed Enrico Fermi Unit 3 Nuclear Power Plant
BY: Detroit Edison Company (Peter Smith)
Lake Eerie, FRENCHTOWN Township, MONROE County, MI
Sheet 59 of 63 12/2011

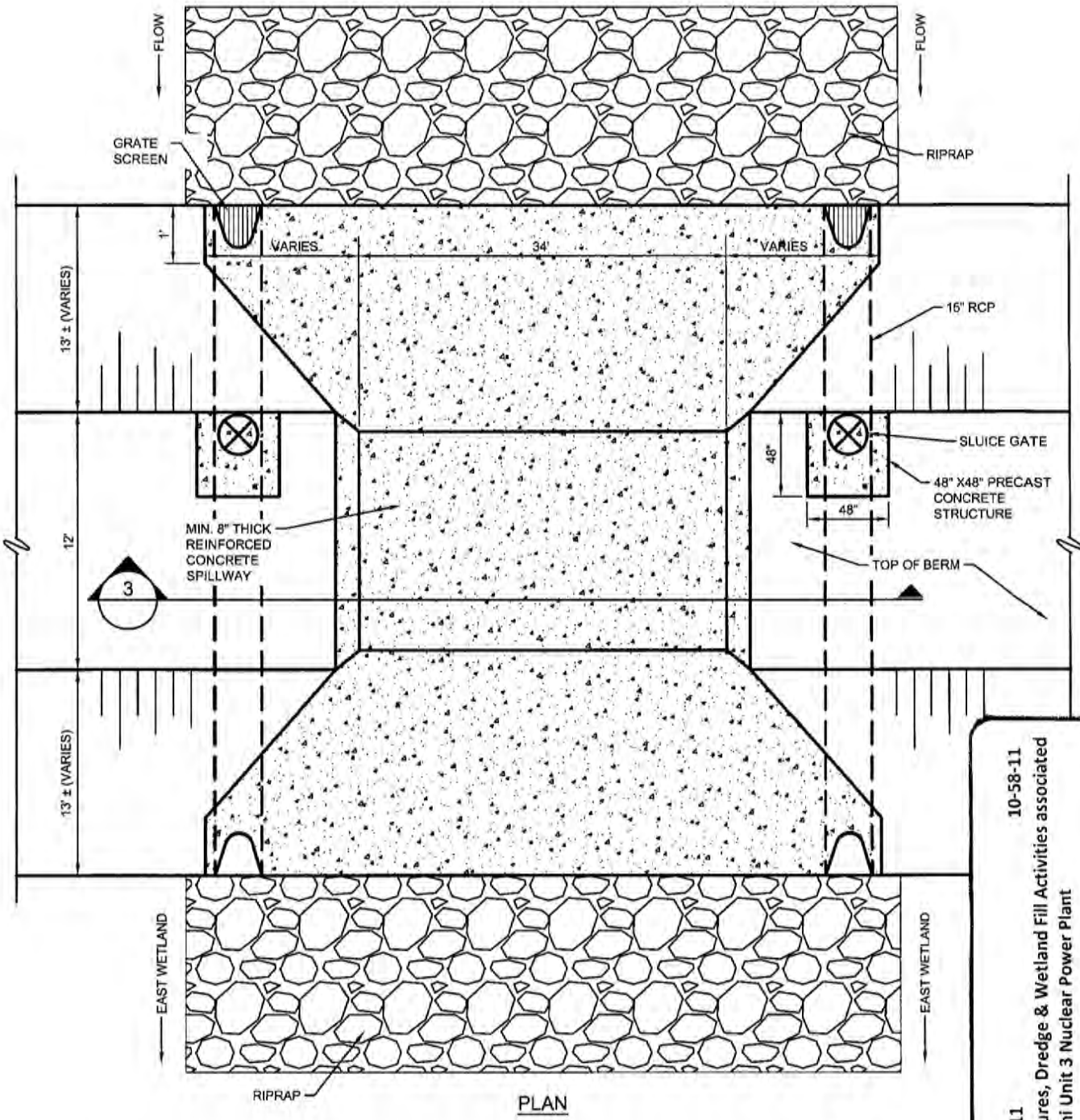

PLAN

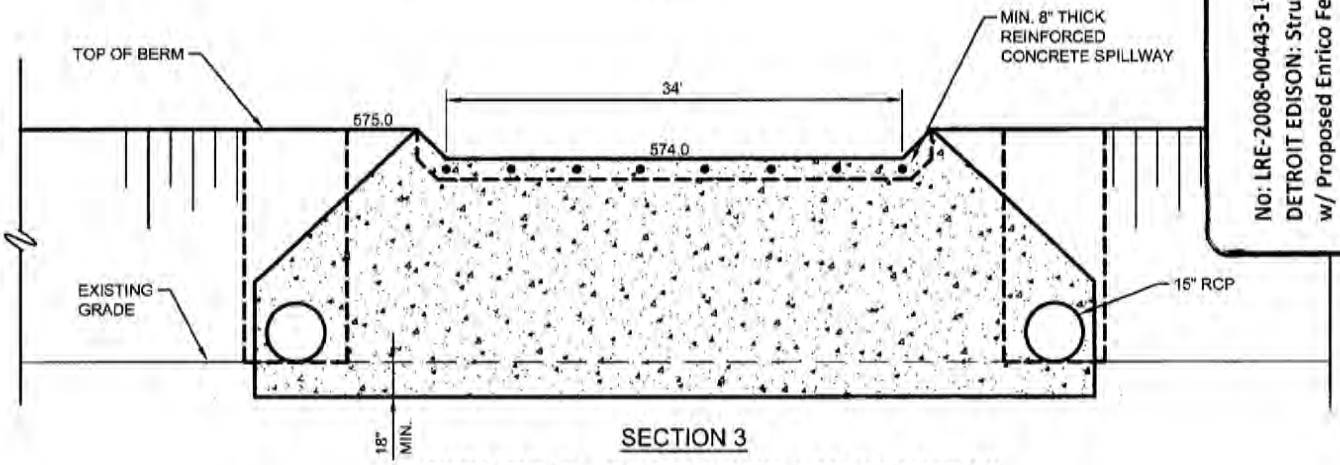

SECTION 3

FIGURE 5 - PROPOSED BERM DETAIL AND WATER CONTROL STRUCTURE

NO SCALE

10-58-11

No: LRE-2008-00443-1-S11
DETROIT EDISON: Structures, Dredge & Wetland Fill Activities associated w/ Proposed Enrico Fermi Unit 3 Nuclear Power Plant
BY: Detroit Edison Company (Peter Smith)
Lake Eerie, FRENCHTOWN Township, MONROE County, MI

12/2011

Sheet 60 of 63

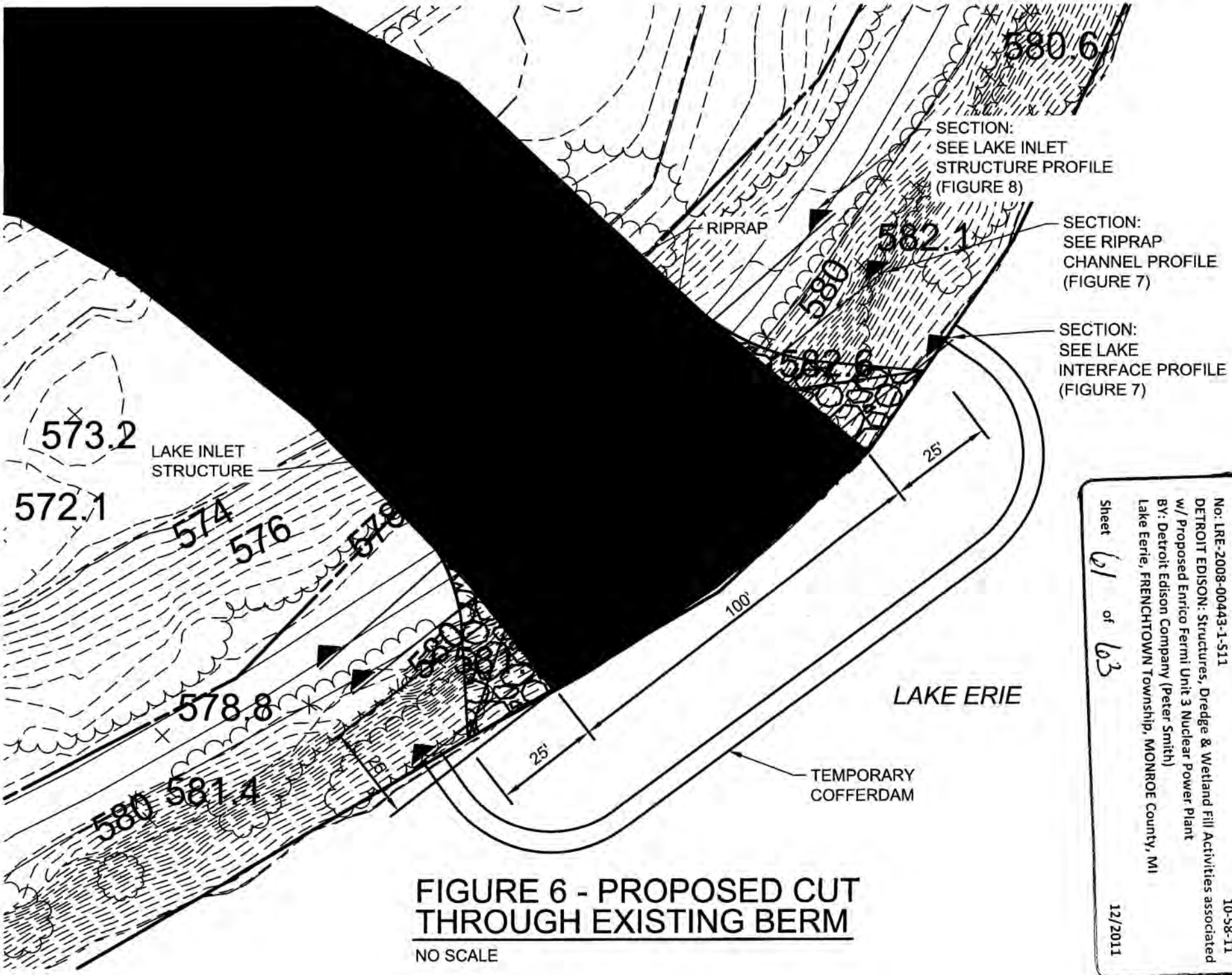

FIGURE 6 - PROPOSED CUT THROUGH EXISTING BERM

NO SCALE

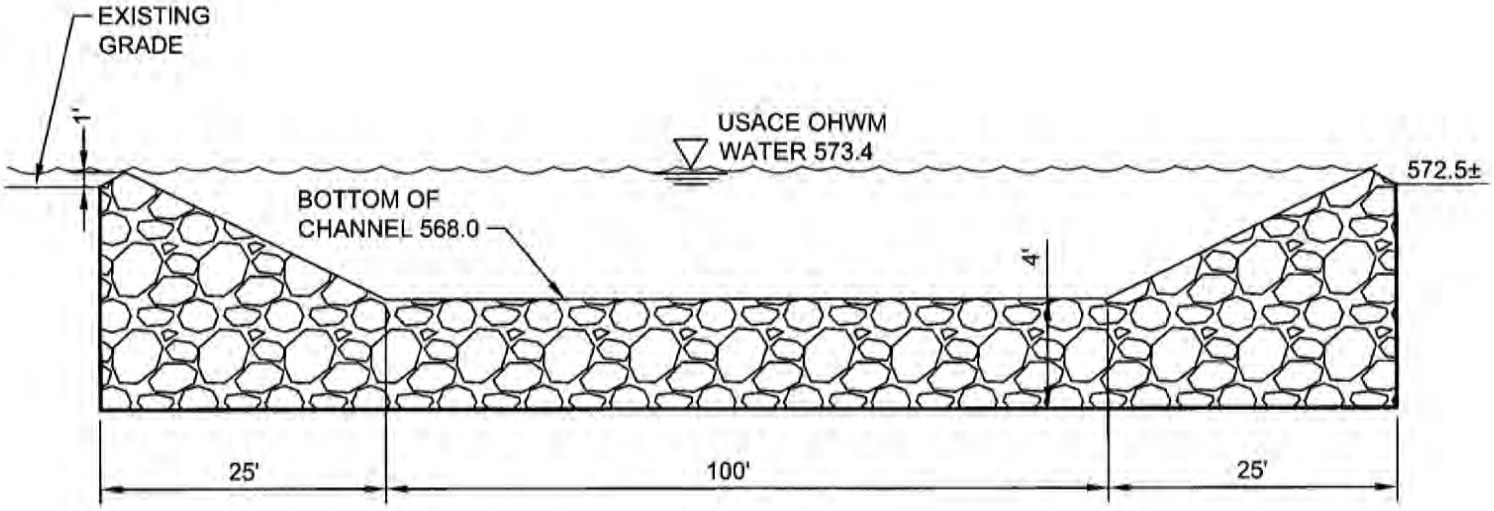

LAKE INTERFACE PROFILE

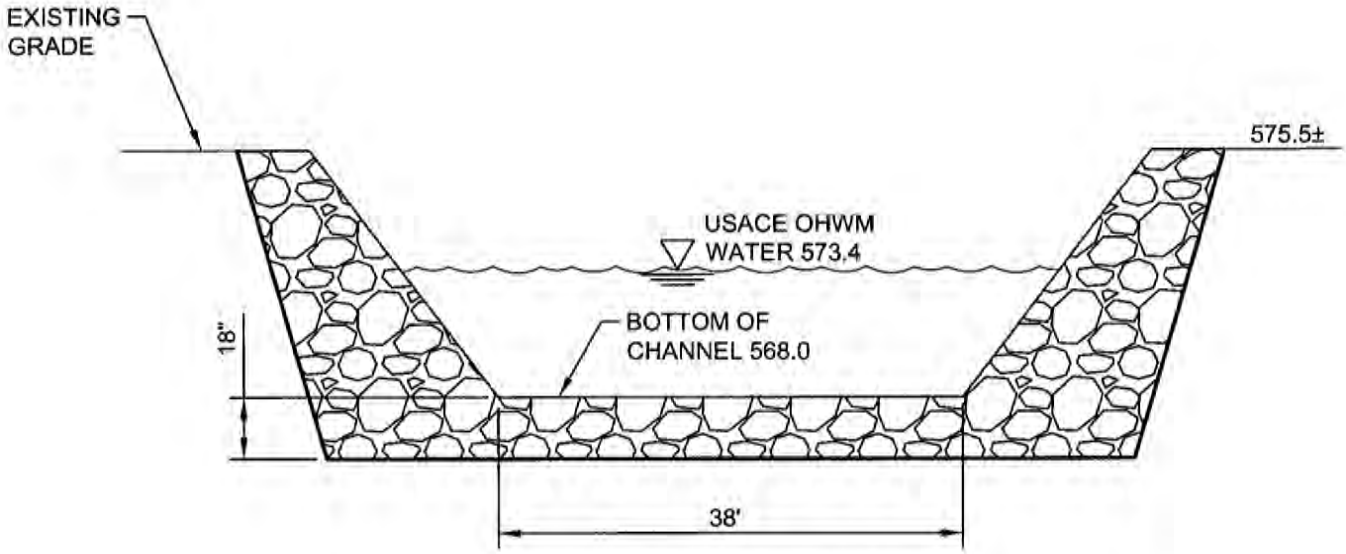

RIPRAP CHANNEL PROFILE

FIGURE 7 - PROPOSED CUT THROUGH EXISTING BERM

NO SCALE

No: LRE-2008-00443-1-S11 10-58-11
DETROIT EDISON: Structures, Dredge & Wetland Fill Activities associated w/ Proposed Enrico Fermi Unit 3 Nuclear Power Plant
BY: Detroit Edison Company (Peter Smith)
Lake Eerie, FRENCHTOWN Township, MONROE County, MI

Sheet G2 of G3 12/2011

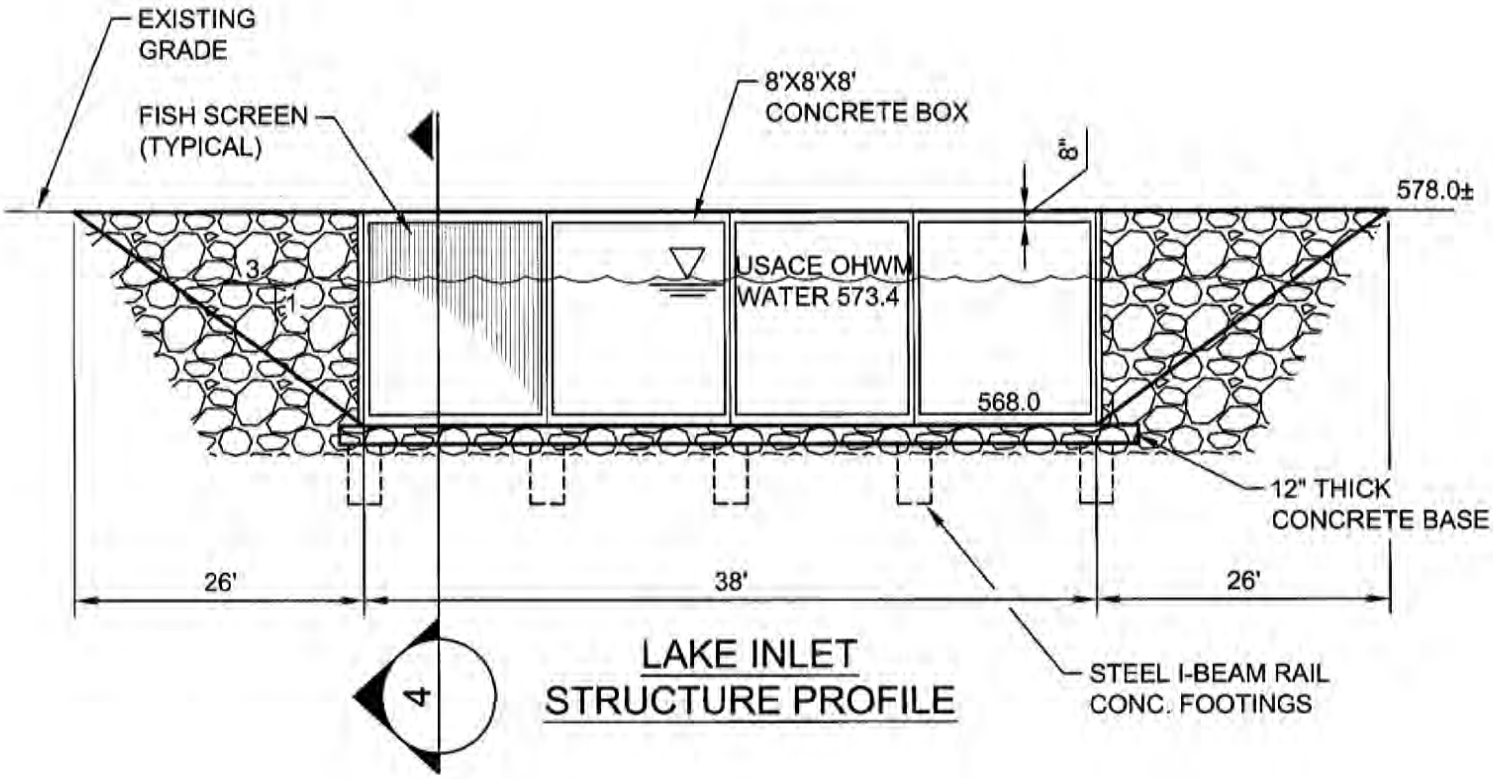

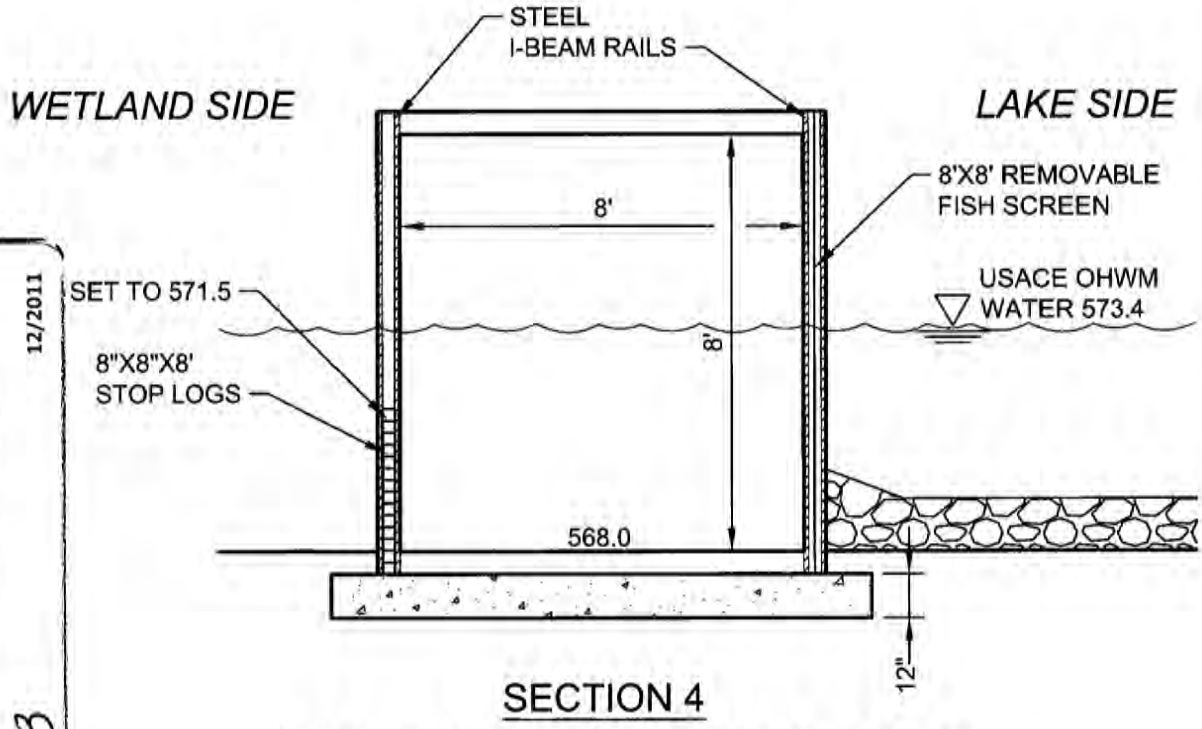

FIGURE 8 - PROPOSED CUT THROUGH EXISTING BERM

NO SCALE

No: LRE-2008-00443-1-S11 10-58-11
DETROIT EDISON: Structures, Dredge & Wetland Fill Activities associated w/ Proposed Enrico Fermi Unit 3 Nuclear Power Plant
BY: Detroit Edison Company (Peter Smith)
Lake Eerie, FRENCHTOWN Township, MONROE County, MI
Sheet 63 of 63 12/2011