Official Transcript of Proceedings

NUCLEAR REGULATORY COMMISSION

Title: Advisory Committee on Reactor Safeguards
595th Meeting

Docket Number: (n/a)

Location: Rockville, Maryland

Date: Thursday, June 7, 2012

Work Order No.: NRC-1672 Pages 1-77

NEAL R. GROSS AND CO., INC.
Court Reporters and Transcribers
1323 Rhode Island Avenue, N.W.
Washington, D.C. 20005
(202) 234-4433

DISCLAIMER

UNITED STATES NUCLEAR REGULATORY COMMISSION'S ADVISORY COMMITTEE ON REACTOR SAFEGUARDS

The contents of this transcript of the proceeding of the United States Nuclear Regulatory Commission Advisory Committee on Reactor Safeguards, as reported herein, is a record of the discussions recorded at the meeting.

This transcript has not been reviewed, corrected, and edited, and it may contain inaccuracies.

UNITED STATES OF AMERICA

NUCLEAR REGULATORY COMMISSION

+ + + + +

595TH MEETING

ADVISORY COMMITTEE ON REACTOR SAFEGUARDS

(ACRS)

+ + + + +

THURSDAY

JUNE 7, 2012

+ + + + +

ROCKVILLE, MARYLAND

+ + + + +

The Advisory Committee met at the Nuclear Regulatory Commission, Two White Flint North, Room T-2B1, 11545 Rockville Pike, at 12:45 p.m., J. Sam Armijo, Chairman, presiding.

COMMITTEE MEMBERS:

J. SAM ARMIJO, Chairman

JOHN W. STETKAR, Vice Chairman

HAROLD B. RAY, Member-at-Large

SANJOY BANERJEE, Member

DENNIS C. BLEY, Member

CHARLES H. BROWN, JR. Member

JOY REMPE, Member

MICHAEL T. RYAN, Member

STEPHEN P. SCHULTZ, Member

WILLIAM J. SHACK, Member

JOHN D. SIEBER, Member

GORDON R. SKILLMAN, Member

NRC STAFF PRESENT:

PETER WEN, Designated Federal Official

EDWIN M. HACKETT, Executive Director

DAVID GARMON, NRR

JOHN KIRKLAND, Region IV

JOHN LUBINSKI

ED MILLER, NRR

JESSE ROBLES, NRR

P R O C E E D I N G S

(12:44:30 p.m.)

CHAIRMAN ARMIJO: Okay, good afternoon. We're ready to start, and our first briefing will be on Significant Reactor Operating Experience, and Jack Sieber will lead the discussion. Jack.

MEMBER SIEBER: Okay, thank you, Mr. Chairman. First off, I'd like to say that every year we give an operating experience report to the ACRS. I usually deliver that, and it's based on the annual report to Congress which just came out publicly on the 4th. So, we can expect that presentation before the Committee in September.

On the other hand, there are three events that have occurred that are worthy of our attention right now, and we are lucky and privileged to have people who are directly involved with those events from the NRC standpoint. And, therefore, the event was the flooding at Fort Calhoun, which I notice in the report they blamed it all on the rain and snow in Montana where my house is, but I don't remember it raining that hard, and the Robinson fire which looked like an escalating event to me. A lot of things went wrong. And lastly, the Brunswick reactor pressure vessel head where the bolts weren't tensioned

properly, and leakage was noted during startup. And as I remember my plant days, tightening the bolts on the reactor vessel head was a arduous and exacting experience which we paid a lot of attention to.

So, what I'd like to do, I've read through the materials that the Staff has prepared, and I find them excellent, and the explanations are excellent, so I direct your attention to those. And representing the staff is Harold Chernoff, who is the Branch Chief of the Operating Experience Branch. And, Harold, I'll turn it over to you to guide us through this presentation.

MR. CHERNOFF: Thank you, Jack. I'll keep my remarks very brief, but to introduce those at the front table here, from Jack's immediate left, Dave Garmon from the Operating Experience Branch. Dave will be speaking about the Brentwood head tensioning in the middle, and a special thanks to John Kirkland coming in. He's a Senior Resident from Fort Calhoun and was nice enough to come up and brief our Executive Team this morning on some information and be with us here today. And to his left is Jesse Robles, also from the Operating Experience Branch staff, and he'll be speaking about the Robinson reactor trip fire and safety injection events. With that, I'll turn it over

to Dave.

MR. GARMON: Good afternoon, everyone. Thank you, Harold, for the introduction. As Harold said, I'll be briefing an event that occurred at Brunswick Unit 2 where the licensee failed to properly tension the reactor vessel head following a maintenance outage.

The Brunswick Steam and Electric Plant is located in southeastern North Carolina, about 40 miles from the City of Wilmington. Unit 2 is a boiling water reactor, a General Electric BWR4-type, has a Mark I containment, and is licensed just above 2,900 megawatts thermal. It commenced operations in 1975, and both units at the Brunswick site received license renewals in 2006.

Just as an overview of the event that I'm going to discuss, on November 16th, 2011 during startup activities and recovering from a maintenance outage, the licensee responded to excessive unidentified leakage by declaring an emergency, and inserting a reactor scram.

After the scram, the licensee investigation revealed that the reactor vessel head had not been properly affixed to the vessel because the head studs were not tensioned. The NRC responded

to the event with a special inspection.

To provide a little background, I want to start on November 4th when the licensee shut down to address indications of a leaking reactor fuel bundle. Right around the 6th they completed their cool down activities, and commenced a reactor disassembly. The maintenance outage lasted about six days, and on the 12th they set the head back onto the vessel. On the 13th they commenced the head tensioning. Later that day they finished tensioning the head, the studs and they declared the unit to be in Mode 4.

On the 15th, the licensee actually commenced their startup activities, and that's when they noted the first signs of increasing unidentified leakage late that day. On the morning of the 16th the unidentified leakage became excessive to the extent that they had to declare an unusual event, and they inserted a reactor scram. Following the scram they cooled down the plant.

CHAIRMAN ARMIJO: Dave, what was that leak rate that triggered the unusual event report?

MR. GARMON: Oh, the tech spec limit is five gallons per minute. That's unidentified leakage, and the UE or the Unusual Event is 10 gallons per minute.

CHAIRMAN ARMIJO: Okay.

MR. GARMON: So, they had entered the tech spec LCO before that, and then they declared the unusual event soon thereafter.

After the scram, they cooled down and depressurized, and entered the containment to look for the leak. At first they couldn't find the leak and they had to raise vessel level to assist the technicians in finding the leak, and they finally identified leakage coming from the reactor vessel flange area.

Further evaluation revealed that several of the head nuts were not tensioned to the extent that the ones that they could access at the time they could rotate by hand. Later on as they removed the head insulation they found that all of the head nuts were able to be rotated by hand or with hand tools only.

MEMBER SKILLMAN: How many studs are there, please?

MR. GARMON: There are 64.

MEMBER SKILLMAN: Sixty-four.

MR. GARMON: Sixty-four.

MEMBER SKILLMAN: Thank you.

DR. NOURBAKHSH: How many were found loose?

MR. GARMON: Say that again.

DR. NOURBAKHSH: How many were found loose? I missed --

MEMBER SIEBER: All of them.

DR. NOURBAKHSH: All of them?

MR. GARMON: Initially -- well, at the end it was all of them.

MEMBER SIEBER: When I first read about this I got the feeling that some were tensioned and others were not, but the fact is none of them were fully tensioned?

MR. GARMON: That's correct. That's correct. And the delay in them being able to identify all of them was the fact that the insulation on top of the reactor vessel head was obstructing full inspection of all of the studs.

Let's see. Additionally, the study elongation measurements indicated that there was no tensioning applied to the reactor vessel head.

We kind of touched on this a little bit already, but the reactor vessel head is tensioned onto the reactor vessel using 64 fasteners. The fasteners are preloaded using a hydraulic tensioning process. And hydraulic tensioning is essentially -- essentially uses a hydraulic jack to elongate the studs which allows a few more turns on the nut and allows the

preload to be transferred to the head.

Before they tension the stud, the stud length is measured and that initial measurement is used as a comparison for the as-left tension measurement of the stud. Operators then thread a nut onto the stud until it makes contact with the washer, and they attach the head tensioning device onto the stud, and they pour hydraulic pressure into this port right here which pulls up on the stud, elongates it, allows a few more turns to be applied to the nut, and once the nut reaches the end of its travel which is it comes in contact with the washer and it's flush with the reactor vessel head, at that point you could relieve hydraulic pressure, and that transfers the preloading from the hydraulic tensioner onto the actual nut.

MEMBER SIEBER: Do they check the elongation after they've --

MR. GARMON: They do, and I'll get into what mistakes they made while they were doing that here in a few slides. If done correctly, this evolution should leave the studs with an elongation of 41 to 49 mils.

CHAIRMAN ARMIJO: Is that done one at a time or are they grouped --

MR. GARMON: Actually, the next slide will show you how they actually do it.

CHAIRMAN ARMIJO: Okay.

MR. GARMON: This slide shows a couple of more -- a little bit more of the tooling that's used and a cross section of the flange area. On the left you'll see a carousel with a strongback, and that's used to tension multiple fasteners at one time. At Brunswick they do four fasteners at a time, and that just insures that the reactor head is -- when it's tensioned is maintained level onto the vessel, so it allows an even application of the preloading.

On the right you'll see that this is a cross section of the vessel flange area. To the top there's -- the vessel head is annotated, on the bottom the reactor vessel is actually annotated, and then there's a cross section of the actual fastener. At the bottom of the stud there's actually a bushing that threads onto the vessel and that's where part of the -- that makes up part of the fastener. Then you have the stud, a spherical washer, and a castle nut, and then, obviously, the stud.

MEMBER SKILLMAN: On the left image you show two rows of bolt heads. What are the outer and inner rows, please?

MR. GARMON: The outer rows are the actual flange, and I believe the inner row is where the insulation attaches to the top of the reactor vessel dome.

MEMBER SKILLMAN: Does it also attach with 64 nuts?

MR. GARMON: I don't think so.

CHAIRMAN ARMIJO: That's an awful lot of nuts.

MEMBER SKILLMAN: That's an awful lot of holes, too.

MR. GARMON: I'm not sure what they are.

MEMBER SKILLMAN: It seems that the image on the right is more accurate and that there are 64 holes, castellated nuts and spherical washers like what is indicated on the right.

MR. GARMON: That's correct.

MEMBER SKILLMAN: Is that correct?

MR. GARMON: That's correct.

MEMBER SKILLMAN: Thank you.

MR. GARMON: The immediate cause of the event is that the -- obviously, the operator did not tension the head properly onto the vessel. This happened because they misinterpreted readings on the hydraulic tensioner display.

The hydraulic tensioner display is not unlike the one that's shown on the screen right now. It offers a feature where the left-most digit does not illuminate until a pressure of 9,999 pounds is exceeded. At that point, the left-most digit illuminates and that allows indication of pressure to five digits. The operators -- the equipment operators that were using this particular setup were unaware of that feature, so they assumed that since there was only four digits displaying at the time, that they had to multiply that value by 10 to obtain the actual pressure that was being applied by the hydraulic unit. So, this caused them to instead of applying the required 13,000 pounds of hydraulic pressure to elongate the studs, they only applied to 1,300 pounds which in insufficient to obtain any stud elongation. And they performed this same -- I guess the same mistake occurred for all 64 fasteners.

CHAIRMAN ARMIJO: Reaching those indications must have been very short time compared to what it would take to get up ten times higher stress.

MR. GARMON: It was, and that was one of the things they looked at in the root cause analysis. They also -- the pitch of the studs and the expected elongation leaves a certain amount of expected turns

left on the nut after you actually apply the preload using the tensioner, and it ended up being about two and a quarter turns. They didn't obtain any of that when they actually tensioned it, and that was another finding in the root cause evaluation.

MEMBER BANERJEE: So, this factor of 10, was that just misreading the dials, or was it --

MR. GARMON: Yes, misinterpreting the dials because they actually -- what they ended up reading was the left-most digit was blank, then they were at a one three and a zero zero, so that actually represented 1,300 pounds but they interpreted since the left-most digit had no indication at all, they didn't realize that that display had that feature where that digit would go blank until it reached the 9,999, or exceeded that level.

DR. NOURBAKHSH: So, they just made it up that they had to multiply by 10?

MR. GARMON: Basically, yes.

DR. NOURBAKHSH: Because I'm sure it wasn't written down in the procedure.

MR. GARMON: No, it was not written in the procedures.

MEMBER BLEY: The report said, and this happens in other places, at least what I read said one

guy suggested it and the other said yes, that's right.

MR. GARMON: That's actually what happened for the stud elongation measures, a similar mistake that they made, but this actually I presume that the same -- a similar thing happened here.

CHAIRMAN ARMIJO: They'd never used this equipment before?

MR. GARMON: The operators that were using this set up, no, they had not used this particular equipment. They were experienced refueling technicians, but they had not used this before.

CHAIRMAN ARMIJO: They hadn't been trained on this particular --

MR. GARMON: They had not, no. And that was another finding from the root cause analysis.

MEMBER BANERJEE: That was a new piece of -- at least the display was new?

MR. GARMON: The next display that I'm going to be talking about is. This one I can't remember. I can find that out for you though, sir.

MR. CHERNOFF: Dave, if I could add.

MR. GARMON: Yes.

MR. CHERNOFF: They use crews of people from the different Progress Energy plants, and in this instance they had one member of the work crew had used

this new tooling at one of their other facilities, but if I recall correctly he was not on the initial group of people that was working the job. He came in on one of the shift turnovers.

The other point to one of the questions, the procedures actually had five places to fill in the data. And they actually modified the procedure to only use four, so they had a lot of thumbnails that something was amiss as they started into this activity.

MEMBER SIEBER: The stud elongation is the final check.

MR. GARMON: It is. It is, and unfortunately they managed to make a mistake there, too.

MEMBER SIEBER: And if you don't get that and something is wrong and you stop, figure out what's wrong.

MEMBER SCHULTZ: Harold, this was some kind of field change of the procedure?

MR. CHERNOFF: Essentially, from the documentation I read they pen and ink changed and initialed, and got the QC people to actually come over and witness the data sheet annotation.

MEMBER SCHULTZ: Thank you.

MEMBER SIEBER: Okay.

DR. NOURBAKHSH: The stud elongation expected is not in the procedure either? It's just supposed to be known?

MR. GARMON: No, I'll cover that --

DR. NOURBAKHSH: You're going to get into that?

MR. GARMON: Yes. As John mentioned, the stud elongation, the as-left elongation is the indicator where -- the final indicator that you've tensioned the head properly. As I mentioned, the studs should present an elongation of 41 to 49 mils or 45 plus or minus 4 mils. When the equipment operators measured the as-left stud elongation they're receiving actual readouts of less than -- of 4 mils or less, which is indicative of the head not being tensioned. However, they rationalized those unexpected readings as a feature of the stud elongation measurement system where that readout would subtract the targeted 45 mil value.

Now, the data sheet that they filled out had them fill out the actual stud elongation, and rather than -- which would be 45 plus or minus 4. But rather than do that, they just filled out variances from that 45 plus or minus 4, so all of the recorded

values were 4 mils or less. And since those values satisfied the variances they convinced themselves that that was the correct indication. So, they did have indication that the head was not tensioned properly, and as Harold kind of alluded to earlier, they performed another field change to the procedure where they actually developed an Excel spreadsheet which kind of rationalized their explanation.

MEMBER SIEBER: Was there indication that the studs were tensioned, even though incorrectly, they were tensioned uniformly? For example, if you had -- if you put the studs in and only tightened four bolts, the amount of strain on those four bolts can —-- when you went to pressure that would be astronomical.

MR. GARMON: Absolutely. And they didn't mention initially that they had that, but later on when the licensee went and they conducted their investigation and their assessment of the reactor vessel, that was one of the observations that they made, that there was a uniform gap around in between the reactor vessel flange and the vessel -- the reactor head flange and the vessel flange, and that the head did not show any indications of warping.

MEMBER SIEBER: Okay. That to me is an

important factor if you intend to reuse the bolts again.

MR. GARMON: Absolutely.

MEMBER SIEBER: Or the head.

MR. GARMON: Absolutely.

MEMBER SIEBER: Because the head will distort, also.

MR. GARMON: Absolutely.

MEMBER SKILLMAN: With these procedure changes that the operating crews were making, who was complicit with them in agreeing to the changes?

MR. GARMON: Sir, it ended up being the whole refueling crew. There was about 12 personnel.

DR. NOURBAKHSH: Including supervisors?

MR. GARMON: Including supervisors, yes, and quality control personnel, as well.

MEMBER BLEY: I'd ask a different question.

MEMBER SKILLMAN: Let me finish, please. It sounds as if the component engineer for the manufacturer was not involved in any of those discussions. Is that accurate?

MR. GARMON: Not to my knowledge. As Harold said, the refueling crew that was working was composed of licensee personnel, licensee refueling technicians. There was also kind of a corporate conglomerate of

Babcock & Wilcox personnel, and Bartlett Holding personnel that formed this refueling team. And there was also three or four AREVA personnel that served as supervisory roles or in what they call technical directors. So, I guess AREVA would be the one that's representing the A&E, I guess.

MEMBER SKILLMAN: Thank you, Dave.

MR. GARMON: Okay.

MEMBER BLEY: Since we're using words like complicit --

MR. GARMON: I didn't -- did I use --

MEMBER SKILLMAN: I did.

MEMBER BLEY: Some of my colleagues. Two things I want to ask about. One is in an inspection, what kind of inspection did we have?

MR. GARMON: We responded with a special inspection.

MEMBER BLEY: Okay. Did you have the human factors guy on that inspection team?

MR. GARMON: I can find that out, sir. I don't know.

MEMBER BLEY: I'd like to know that. That's number one. I'm going to use complicit just to join the crowd, but only once. The machine itself was complicit in this event. If a real look at this

process had been done a priori and how that instrument worked, it would not have been difficult to predict that somebody somewhere, sometime would make this error. You can always say well, we've had better training, but eventually it would happen. And I hope somebody looked at that and is blaming the system as well as the people.

CHAIRMAN ARMIJO: Yes, it should be easy to read, and this looks -- it's cryptic, isn't it?

MEMBER BLEY: It's -- you train people on it and all that, but when you have something that -- you're essentially setting the guy up.

CHAIRMAN ARMIJO: Yes.

MEMBER BLEY: And you try to avoid that as often as you can. Is the special inspection report out? I don't think I've seen it.

MR. GARMON: The special inspection report was out. The inspection was completed on November 30th, and they exited with one unresolved item.

MEMBER BLEY: Okay.

MR. GARMON: And then we completed a follow-up inspection this past April, and I'll talk a little bit about that in my NRC action slide if you'll allow me, sir.

MEMBER BLEY: Okay. I'd like to get a copy.

Is it on the CD? Okay, so we had it. So, maybe I looked at it. It's been a while since we got that information. Okay.

MR. GARMON: Okay.

MEMBER SCHULTZ: But this is a separate instrument, and it appears to me that there's at least three procedural violations associated with just this one measurement. That someone had an opportunity to know that they weren't doing this properly.

MR. GARMON: Yes.

MR. CHERNOFF: And if I could add, and, Dave, correct me if I'm wrong here, but on the SEMS instrumentation they actually enter in the desired into the little computer for the SEMS instrumentation and if used properly when it achieves the desired result it actually has an arrow indicating that it's good. And that entering in the if you would 45 mils value is in the root cause analysis part of how the group's thing got going with that, that added value actually substracts. The SEMS instrumentation itself had to have been properly trained, seems pretty sound in giving very clear feedback on when the appropriate values are achieved by the upward arrow, maybe not so much with the hydraulic pressure indication system itself.

MR. GARMON: Thank you, Harold.

MEMBER STETKAR: This also is the first use of the SEMS --

MR. CHERNOFF: Again, this only had been used at other --

MR. GARMON: This one, the SEMS was used for the first time during a previous outage on Unit 1, and that was in the spring of 2011, sir. So, fairly new instrumentation.

CHAIRMAN ARMIJO: And the first use likelihood the crew got a lot of training for the first use, and then somebody just assumed that any other crew would just know what to do?

MR. GARMON: That's probably a fair statement, sir.

CHAIRMAN ARMIJO: Okay.

MR. CHERNOFF: And as -- you know, the other aspect is they got into a major restructuring of how they were doing refuelings and staffing the refueling crews in between that spring outage and this one. So, there were a lot of dynamics that played into this complicated event.

MR. GARMON: Aside from the immediate corrective actions which involve the procedural corrections and equipment evaluations that we kind of

alluded to earlier making sure that the vessel was sound, and that the reactor coolant pressure boundary was able to be re-established with the as-found condition, the licensee completed a fairly extensive root cause analysis, and they determined that the root cause's failure to provide proper training and procedural guidance to personnel involved in that refueling activity.

There were several contributing factors.

MEMBER RAY: Hold on a second. I always get upset with these things, I guess. That isn't the root cause. That's what -- that's not a root cause in my opinion.

MR. GARMON: Okay.

MEMBER RAY: Just giving you an opinion. It's a consequence of something, but you're now going to go back up to contributing causes rather than comment further in terms of a root cause. Like, for example, inadequate supervisor, not enough time allowed for the job or things like that. But just the fact that they didn't get training -- well, why didn't they get training? That's the question.

MR. GARMON: Harold kind of led to the -- or discussed this a little bit. They -- I would say from reading the material that it was a schedule-

driven issue, because they put together this team to conduct this mid-cycle outage.

MEMBER RAY: Yes, it wasn't planned, it came up --

MR. GARMON: Exactly.

MEMBER RAY: -- ad hoc. They were in a big hurry I would imagine, and they pulled together a bunch of people. Yes, they didn't get trained, but they didn't get training because they didn't stop and give them the training. And why did they do that is the issue I'm trying to raise here. It's too easy to say well, somebody didn't do it right because he didn't get the training. But the real question is why -- how is the decision reached to not provide the training?

MEMBER RYAN: I really think Harold's concern -- I think that's a very, very important observation he's making. In my opinion, having done a lot of root cause analysis, it's got nothing to do with the fact that they didn't get trained. It's got to do with the fact the system, whatever that is, of people, and time, and procedures, and requirements didn't get implemented.

MEMBER RAY: Yes, that's the root cause.

MEMBER RYAN: That's the root cause.

MEMBER BLEY: And the doggoned procedures for root cause which were developed by the industry, they never want to go that far.

MR. GARMON: Well, I guess they kind of did, but not calling it the root cause in the safety culture assessment which I'll talk about --

MEMBER BLEY: All right. I mean, if you come to it by another way, that's all right. But still and all, it just really bugs me. It always has. They stop at the -- the root cause for my not getting home on time was that the plane was late. Well, that's -- why is the plane late is the question.

MEMBER RYAN: The bigger question it raises for me, however, is the root cause analysis program sound when you tell a story like that? I mean, that's what I would be pulling the string on if I was in that organization. Is that root cause analysis sound when it comes up with that answer?

MEMBER SIEBER: To go along with your observation, if you don't find the root cause, you don't fix the problem.

MEMBER RAY: No, that's right. But like I said --

MEMBER SIEBER: Five supervisors on, if they don't know what they're doing, they might as well

go play cards someplace.

MEMBER RAY: I was involved in the development of the root cause guidelines, and let me tell you, they deliberately don't go to the management issues. They deliberately don't do that.

MEMBER BANERJEE: It also seems to me that the dial on -- at least one of the instruments was a bit confusing.

MR. GARMON: And they call that an immediate cause, not necessarily a root cause.

MEMBER SIEBER: And you overcome that by training.

MEMBER BANERJEE: Contributing cause.

MR. CHERNOFF: They're actually -- although we are citing what the licensee said was the root cause, they actually have about four pages of causal factor and analysis in this writeup, and there's a -- it's down here at the bottom of our page, the safety culture assessment. There's a very heavy emphasis in the licensee's writeup about organizational factors that led to this, heavily influencing things like lack of -- I would use the phrase command and control, who was in charge, who was responsible for accomplishing things like training and dictating that those time --

(Simultaneous speech.)

MEMBER RAY: That's fine. I think that's what we're looking for. But it just irritates they call something a root cause that isn't even close to the root cause.

MEMBER RYAN: And I guess I would -- if there is a package that explains all that, it might help if we could just look at it.

MR. CHERNOFF: Sure.

MEMBER RYAN: Thank you.

MEMBER SKILLMAN: I'd like to offer an additional point of view on this. It's always -- let me back up. It seems that when we have issues like this no matter whether at this station or another station, we almost always end up with a root cause that appears approximately the way this root cause is worded. But what comes to my mind is if one had looked at the Corrective Action Program two months before this event, would one have concluded that the Correction Action Program for this unit and this station is strong enough to prevent something like this from occurring? And one of the quickest ways to know how strong the Corrective Action Program is, is how effective the root causes are, how deeply they go, how quick the unit is to go to an apparent cause, and just take the item to fix and not dig any more deeply.

So I wonder to the NRC Staff, to what extent did you take a look at their Criterion 16, 10 CFR 50, Appendix B and say you know what, they were set up for this because their system doesn't even really ask those tough questions. There may be many examples where there were near misses. This one just happened to get them. And the reason is because the root causes just weren't performed with a sufficiently thick magnifying glass to really go down and find out what the problem is.

MEMBER SCHULTZ: And that's a real concern here because if this is termed the root cause, then the corrective actions that result from it to apply to the organization or to other issues are not going to, in fact, catch them. They'll be programs associated with assuring training is done, on other features of maintenance on the site, but as Jack indicated, and Harold, as well, had you gone one or two more steps deeper and found the root cause, you likely would have affected the culture of the site to a higher degree.

MR. GARMON: I can't speak too much to the -- how far we looked into the Corrective Action program during the inspection. I can get back to you on that one, sir, but I will say that during the follow-up inspection one of the reasons that we exited

the SIT with an unresolved item is so that we can evaluate the root cause analysis. And whether you agree or don't agree with the final bolded statement that they say the region when they're evaluating the root cause analysis, they evaluate the document in its entirety, and its ability to -- or its effectiveness at addressing the weaknesses that are identified by the event. Part of the weaknesses, or a larger part of it was in safety culture, and the safety culture of that root cause analysis, so I can't speak to that. Don't feel comfortable speaking for the region, but I will say that that probably fed into their -- the findings that they pulled out of this event. And it also -- that section speaks to a lot of the concerns that you gentlemen are raising as far as the culture, the management, the supervision, the fact that the operators felt that it was proper to adjust procedures in the field rather than use the appropriate organizational tools that they have to address procedures. So, they do speak to that. And I think once you -- I'll provide the root cause analysis to you, and once you review that, I'm sure a lot of your questions will be answered.

MEMBER RYAN: Dave, it might be helpful, too, to have a couple of the key relevant procedures

for how --

MR. GARMON: Absolutely.

MEMBER RYAN: -- the work was done. For example, does the procedure specify what is the proper type. My question would be if it doesn't, why not?

MR. GARMON: I could tell you that the procedure does say what the specs are, but it doesn't describe how the display operates. And that's where the shortcoming was.

MEMBER RYAN: So, I guess -- and just to be fair and try and look at all sides, I think there's several different paths this story could take. And I think, at least my reaction is kind of like Harold's, you know, the really bad thing could be in play here of really having a cultural gap somewhere along the line in terms of implementation. And I think we just want to understand that better, so don't feel like we're taking the bat out and wacking you around a little bit -- you know, it's just caught our attention because I think it's something that we feel, if it is minor, great. It can be fixed. But if it's -- if there's something deeper then that's something else that needs attention. I'm not expressing that well, but that's what I think about it.

CHAIRMAN ARMIJO: I've never tightened a

reactor vessel head, but it would seem that this is not a routine thing that any guy with a wrench or a machine can do it. Isn't there some sort of a qualification for a crew, at least a leader of the crew to have been qualified in the use of the equipment and technique?

MR. GARMON: There is actually, sir, in one of the findings from the licensee's analysis is they had not held formal training in the refueling process since 2000. Now, they have documented on the job, or I guess Just In Time training, and they completed tabletop exercises, and there's -- I guess they have experience because they've obviously completed refueling outages since 2000, and this event had not happened since then. So, I guess they also relied on the pass on of the operating -- of experience from operator to operator, informal training. And that was one of the findings, is that the training should be formalized and the procedures should be improved, as well.

CHAIRMAN ARMIJO: It seems to me that that would be -- that's a really big, important step.

MR. GARMON: It is.

MEMBER RYAN: Just a quick question if I may, sir. Were there any follow-up for extent of

condition?

MR. GARMON: They did. They mentioned that in their analysis, and they found that the only other evolution that they perform on the site where it requires a tensioning-type process is in the reassembly of the turbine. And they addressed that and they found the same issues had not applied in their turbine reassemblies.

MEMBER RYAN: Okay, thank you.

MEMBER SIEBER: They could have spent a couple of bucks on a depth gauge.

MR. GARMON: Probably, sir, because --

(Simultaneous speech.)

MEMBER SIEBER: Plug it in or use batteries.

MR. GARMON: Yes, sir. Jesse, if you wouldn't mind, next slide. We kind of touched on these already. We've completed a special inspection on the 30th, and we've completed our follow-up of the unresolved item in April of this year. We determined there were three findings associated with this event, and each of the findings expressed or exhibited a human performance crosscutting area. That information will be used to assess the licensee's future position in the reactor oversight process action matrix, and it

also be used to influence future inspection plans at the site.

And the final bullet talks about our branch developed an internal document which communicates the details of this event to internal stakeholders, and uses that vehicle to store the operating experience for future use. And that's all I have.

MEMBER SIEBER: Okay, thank you.

MR. GARMON: Thank you.

MEMBER SIEBER: Appreciate it.

MR. GARMON: As it gets closer to you, sure.

MR. KIRKLAND: Good afternoon. Thank you for having me here this afternoon. AS Harold mentioned, my name is John Kirkland. I'm the Senior Resident Inspector at Fort Calhoun Station. I'll give you a brief summary of Missouri River flooding from last year, the impact it had on Fort Calhoun Station, kind of the results coming out of that.

A quick outline, I'll give you a description of the facility and talk about the design levels for flooding at Fort Calhoun. That will also include a brief discussion of a yellow violation that we identified for flood mitigating strategies at Fort

Calhoun in 2009-2010. And talk about the flooding event itself, some of the complications that arose for the licensee, their response to the event, our response to the event, and then kind of how the licensee is wrapping things up and taking lessons learned that they got out of that.

First, Fort Calhoun Station is a Combustion Engineering Pressurized water reactor at about 500 megawatts electric. It received its operating license in 1973. It got its license extension approved in 2004, and next August it will reach into its extended post 40-year lifetime.

The plant itself lies about 19 miles north of Omaha, Nebraska, which is the closest metropolitan area to the plant. It is literally on the banks of the Missouri River. The site elevation for the most part is 1,004 feet mean sea level. That cares of almost all of the safety-related structures.

This is a pretty good overhead view of the plant. You could see a pretty good defined Missouri River here. You've got your intake structure right on the river, and around the power block, as I mentioned for the most part 1,004 feet mean sea level. The ground slopes away from the river. The switch yard for the most part is at 1,006 feet mean sea level so it's

about two feet higher than the power block structure. The one exception to that is this building right here which houses switchgear-related components for 161 kilo volt. That was one of the first buildings that were impacted by flood water last year, and that sits at roughly 1,000 feet. It sits quite a bit lower than the rest of the switch yard.

As you come back further away from the River, you've got a railroad track here and then there's a main highway that runs to the north and south right there. And that sits about 60 feet higher than the plant itself, so you can see what a huge elevation difference there is for people as they access the site before they come down to the site.

MEMBER BLEY: Just to help me understand what you're going to show us in the next few slides, where on the photograph, if it's on the photograph, did the water first come over and start heading toward that part of the site that got flooded?

MR. KIRKLAND: Actually, the way the water really first came is it flooded the field here, and then came back around and kind of wrapped around to the west side of the switch yard here. And then as it started to impact the actual protected area, it kind of started in this northeast corner of the plant here,

and then kind of moved to the south and to the west as it came up.

MEMBER BLEY: Okay, thanks.

MEMBER SCHULTZ: And, John, that is an up slope beyond the switch yard towards the railway?

MEMBER SIEBER: Yes.

MR. KIRKLAND: That is correct.

MEMBER SCHULTZ: Thank you.

MEMBER SIEBER: What's the normal full level of the river?

MR. KIRKLAND: It varies. Right now it's at about 990 feet mean sea level, so it's about 15 feet below. That's a little lower than normal. I think in a normal late spring/early summer when the rivers are at their highest, I think you'd be sitting at about 995 to 998 would be a normal.

This gives a pretty good description of the river itself and the river dam system. The Missouri River Valley has six dams, one in Montana, one in North Dakota, actually, the other four are all really in South Dakota. Gavins Point, which is the smallest of the six dams is closest to the site up river approximately 100 or 125 miles. And the site sits on the river right about here, about halfway north-south in the State of Nebraska.

MEMBER SHACK: How many of those are earthen dams?

MR. KIRKLAND: Earthen dams? All six of them.

MEMBER SHACK: All six of the dams.

MR. KIRKLAND: Yes. In 2009, and I titled this slide, "Updated safety analysis report 2009," although it was virtually unchanged from the final safety analysis report 1973. There is a paragraph that talks about flood protection and includes many, many different elevations. And I kind of broke it down. They make a statement that the design flood elevation is 1,004.2 feet mean sea level which is basically grade. They have hardened structures meaning they could accommodate flood levels up to 1,007 feet mean sea level without any special provisions. They described 1,009 --

MEMBER BLEY: That's no portable doors or anything like that.

MR. KIRKLAND: Pardon?

MEMBER BLEY: No portable barriers or anything.

MR. KIRKLAND: That is correct for 1,007. Up to 1,009.3 which is what they described as the probable maximum flood level they could protect using

steel flood gates on doors to protect the safety-related buildings. And then to take care of wave induced action they made a statement that they could protect up to 1,014 feet mean sea level using sandbags, temporary earthen levies, and other methods. It's also interesting to note from the core studies back in the '60s that 1,014 feet is what they estimated the river level at the site would be due to a failure of Gavins Point dam.

MEMBER BLEY: That's the last dam?

MR. KIRKLAND: Yes, that's the closest one to the site. Yes. So, what we found in our component design basis inspection in 2009 were deficiencies in their strategies to protect structures above 1,008 feet mean sea level. Now, that had mentioned at 1,014 feet they could protect using sandbags, earthen levies and other measures. This photo right here shows one of the entrances to the intake structure, and it's got a steel gate there which is its protection to 1,009 feet. And then their strategy to protect to 1,014 feet was to stack five-feet of sandbags up to the top of this door on the ledge of the top of the steel gate of about that wide.

We asked them as part of the inspection to prove that, and that's about as far as they got up the

door before sandbags just kept falling over, so at this point from the outside of the intake structure they could not protect for more than about 1,010 or 1,011 feet.

A bigger issue was the inside of the intake structure, as you have water coming up the cells you could flood out the intake structure at that level and floor level inside the intake structure is about 1,008 feet, which is where we came up with the deficiencies providing protection about 1,008 feet, was predominantly due to the floor level of the intake structure, and the ability of water then to go below and get to the safety-related raw water pumps, which is what most plants will call the central cooling water pumps.

MEMBER BLEY: This is something I don't know anything about, but a lot of the parts of the plant when it's designed and built you have to demonstrate and test, and prove that things work. Is that not generally true for extreme events, because this sounds like it's the first time anybody tried to do what they said they could do.

MR. KIRKLAND: I think that's a true statement that it is probably the first time that somebody had looked at doing this. If you go back to

what the safety analysis report said and the bullets I had with the levels, that breaks it out pretty cleanly. The paragraph itself is very, very confusing when it's read, so my belief is a lot of people believe the way the paragraph was written that 1,009 feet was all they were required to protect to.

MEMBER BLEY: So, even if they had tried to do this they would have been happy --

MR. KIRKLAND: That's correct.

MEMBER BLEY: Okay.

MEMBER RAY: Wait a second. I'm beginning to get confused as to what the design -- you say the design flood elevation is 1,004.2, so, I'm asking what are you required to demonstrate above 1,004.2?

MR. KIRKLAND: It was kind of a -- I don't want to say nuance, but it was a little different from the '60s and '70s on what was actually required for plants for flood protection. So, when they use the word 1,004.2 feet design basis flood, they were using that terminology for the design basis elevation of the plant. And the 1,009.3 feet was the probable maximum flood, which is what they were required to protect to plus wave action above the top of that.

MEMBER RAY: Well, the one thing I can certainly agree with is that it's confusing in that

sense, because when you say required to protect, that really goes to the question Dennis is asking. And it has application in some of these flex and other kind of things we're talking about in the future, which is what do you have to demonstrate with regard to the capabilities that exist beyond the design basis? So, I'm really asking what the design basis is.

I understand your answer to be the design basis is actually 1,014 feet, I guess, 1,009 plus wave action. That's what it sounds like.

MR. KIRKLAND: That is correct. That is the position that the NRC has taken, and a position that the licensee has now agreed that they are required by their license to protect to 1,014 feet.

MEMBER RAY: Okay. Well, that answers my question then. Then it's legitimate to say well, how was that ever demonstrated? And it goes to this question of the sandbags and all that kind of stuff. But I was just trying to make sure I understood that the sandbags you have pictured there are actually part of the design and not something to mitigate the effects of above design.

MR. KIRKLAND: It is part of design, and it is described both in the safety analysis report, and the safety evaluation report itself.

MEMBER RAY: All right.

MR. KIRKLAND: Knowing that in 1970 --

MEMBER RAY: Wait a minute. I licensed the plant in 1970. Don't just say that that was all Mickey Mouse. I --

MR. KIRKLAND: It's just in 1970 they allowed plants to use manual methods to meet their flood basis requirements, where today's requirements they would essentially have to be hands off to be able to get in and maintain cold shutdown.

MEMBER RAY: Well, we're getting too far down in the weeds here, but I did want to find out what --

MEMBER BLEY: No, I appreciate that. I wanted to back you up. I want to make a comment on this questioning that just went on. It sounds like you and the plant have arrived at this point, which kind of makes me think most other plants haven't thought this thing through, not just for this event but for other extreme events that might require some manual activities to take care of them.

The other question I had was if you back up one slide, maybe back up two. That's the one I want. It also sounds as if it's just coincidence that if the Gavins Point dam breaks you're matched at that

1,014 feet, that they have no requirement to sustain the break of that dam. Is that true, or did they have a requirement to sustain the break of that dam?

MR. KIRKLAND: The way that the safety analysis report, the safety evaluation report is written does not look like they were required to sustain a dam failure.

MEMBER BLEY: Okay, that's what it sounds like. Now, this is hypothetical. If they had, and they had picked that one, since the ones before it are much larger, I suspect if one of those broke you'd over top Gavins Point and have even a worse flood than you have if you only lose Gavins Point.

MR. KIRKLAND: That would be correct. Without knowing the terrain, exactly how the water would come down, so I don't think you can say all the volume of Fort Randall would pass through and over top Gavins Point.

MEMBER BLEY: Certainly probably not all of it, but some of it.

MR. KIRKLAND: Absolutely a good portion of it.

MEMBER BLEY: There's a lot of water out there.

MEMBER SHACK: There is an estimate of how

deep it gets in the dam failure report.

MR. KIRKLAND: that is correct.

MEMBER SHACK: It is deeper than 1,013.

MEMBER BLEY: Okay, I'll stop.

MR. KIRKLAND: And also part of the 50.54(F) letter response, will then require them to look at multiple dam failures upstream, so that would look at Fort Peck failing, which is the farthest one north in Montana, and what effect that would have on a cascading dam effect.

MEMBER BLEY: We're not here to talk about dams, but I don't know what our rules are about how you'd have to consider dam failure, and one day I'd like to pursue that, but not now. I don't want to beat you guys up.

MEMBER SKILLMAN: On Slide 7 please, next slide. John, on this image on the right, are we on the river flooded site or are we on the protected side?

MR. KIRKLAND: We are on the protected side, so the other side of that door if you just kept on walking you would walk into the river.

MEMBER SKILLMAN: Thank you, because I was going to ask you about that valve. That's a fire system valve. That's a gate, it's closed, and I would just -- if were on the water side I was going to ask

you how you're going to get that valve open.

MR. KIRKLAND: This is actually a delay barrier is all that fence really is right there, so it's just kind of a delay barrier for human beings to walk into the intake structure.

MEMBER SKILLMAN: Thank you.

MR. KIRKLAND: So, leading to the event, Fort Calhoun entered a scheduled refueling outage on April 11th, 2011. Beginning in mid-May of 2011, the Corps of Engineers due to heavier than normal snow pack in Montana and North Dakota, late snow melt in Montana and North Dakota, and more than a year's worth of precipitation of rain over a two-week period throughout the entire Missouri Valley system all the way down through Omaha, the Corps determined that they were going to have to increase flow rates out of each of the dams to be able to maintain the integrity of the dams throughout the entire flooding season.

As a result of that, when it became apparent to Fort Calhoun that they would exceed 1,004 feet, they made the decision to suspend their outage to primarily focus all of their attention to combat the rising Missouri River level.

MEMBER SIEBER: I have a question. I may not be accurate, but I understood at the time that the

Corps of Engineers delayed releasing flood waters to protect properties further down the Missouri and the Mississippi River because the bank heights are relatively low, and once they would overflow it would spread out over hundreds or thousands of square miles of farmland. And is there any kind of an agreement between NRC or licensees and the Corps of Engineers that the Corps would release water in order to protect a nuclear power plant from a flooding event that could lead to a disaster?

MR. KIRKLAND: Prior to this event --

MEMBER SIEBER: Or does the Corps just do whatever they feel they ought to do?

MR. KIRKLAND: Prior to this event, there had not been a lot of discussion between the NRC and the Corps of Engineers. However, during the majority of last summer we were on the phone with the Corps almost daily. And the Corps, the way they described to us, they were managing the river level to their master manual.

I don't think we can answer the question for the Corps to say if we came to you and said you had to stop the increased release rates to save this plant, would you do it? I don't think we can answer that question. Their standard answer last year for

everything that happened is they have competing interests. They have the interest of flood control, recreation, irrigation, wildlife. And one of the factors is Fort Calhoun, one of the factors is Omaha, Kansas City, which do sit on there. But I don't think there is a hard and fast agreement that says they're going to control that level, or those dam release rates to whatever they have to be strictly to protect Fort Calhoun.

MEMBER STETKAR: John, can I -- I'll ask one of the NRR guys because it's not fair to ask you. For years, the Agency has been actively involved with electric power distributors, transmission system operators because of the very, very severe concerns about the demons of station blackout, losses of offsite power. To the extent that there are formal agreements in place, those agreements have become more formalized in recent years about how people shall communicate and operate systems, and inform nuclear power plants, and how nuclear power plants shall communicate with integrated system operators.

Is the Agency now aware of the need to do that with the Corps of Engineers and other hydraulic river system operators? And are you pursuing that? And that's why I'm asking NRR because this is an Agency

issue, it's not the poor guy out at Fort Calhoun.

MR. CHERNOFF: Send that one over this way. The short answer is yes. Even before Fukushima, we had established within the Agency as part of the critical infrastructure work that was going on, as you're alluding to across the government, dam safety officer, no pun intended, and that person was George Wilson, and he was very involved in coordinating and working with both the Corps of Engineers, as well as other agencies in looking at the issues that we're -- one of which the outfalls that we're talking about today is the balancing of important safety for both public and the facility that we more closely regulate.

MEMBER STETKAR: We've had some briefings about the dam safety program, and that looks at inspecting dams for dam failures. I'm talking about managing river systems the same way as you manage electric power systems. It's a completely different phenomena than just going out and determining who does the -- whether it's state, or federal, or whoever, NRC in some cases, whether you inspect the dam.

MR. CHERNOFF: You're very correct about the --

MEMBER STETKAR: I'm asking about --

(Simultaneous speech.)

MR. CHERNOFF: It did get off into those other areas, as well, and then --

MEMBER STETKAR: Okay.

MR. CHERNOFF: -- we also as part of our task force that we have working with regards to Fukushima after actions -- it's obviously a focus. I don't know if you have anything to add with the current activities.

MR. MILLER: The only thing I would add to that is that the walkdowns we're doing right now do have for manual actions that are dependent upon notification from an entity like that verify that there are proper agreements in place.

MEMBER STETKAR: That's fine. It's not the question I'm asking, but in the interest of time, we have to move on and hear about the rest of this one.

MEMBER SCHULTZ: It goes on to this slide, John. This slide is demonstrating what it's all about, and why you need those --

MR. KIRKLAND: This is a graphical representation of the discharge rate out at Gavins Point Dam over the summer. The red line here represents the historically greatest release out of Gavins Point Dam which was 70,000 cubic feet per second in 1997. And toward the latter part of June

they reached 160,000 cubic feet per second.

MEMBER STETKAR: Historically in the life of that dam, or historically in the last 10 years?

MR. KIRKLAND: Historically in the life of the dam.

MEMBER STETKAR: Okay.

MR. KIRKLAND: So, they were a little more than twice the flow rate that they'd ever put out of that dam. This shows the river level which it actually is somewhat shaped a lot like the flow rate. There's some drop off here, but the high level reached was 1,006 feet 10 inches was roughly achieved at the time they reached 160,000 cubic feet per second. What you would see after that are downstream levy failures, more spreading out across farmland in both Nebraska and Iowa.

MEMBER BLEY: And this level is right at the plant.

MR. KIRKLAND: These are plant levels, yes. So, the facility entered their abnormal operation or abnormal operating procedure on May 22nd. There are different levels of that procedure based on predicted river levels at the site on what they needed to do. When it became apparent that flow rates were going to exceed 1,004-1/2 feet at the time the best estimates

from the Corps was 1,009 feet on site. The site also took on their own initiative as not part of their procedure, they built a water filled dam known -- the trade name is Aqua Dam. We predominantly call it an Aqua Berm around the power block. That was predominantly done for asset protection, and for the ability of personnel to move with ease without having to deal with water.

MEMBER SKILLMAN: Had that Aqua Berm not been placed, would the water have entered the power block?

MR. KIRKLAND: The water would have entered up to the buildings inside the power block which we'll see in another slide when the Aqua Berm that they had failed and allowed that in. On June 6th, they declared a notification of usual event. That is triggered at 1,004 feet which is its elevation. And as we saw in the other slide, the river -- the highest level was 1,006 feet 10 inches on June 25th.

This is a picture of the site from the west looking east, and this is in mid-June time frame. As compared to the first aerial view we saw, we no longer have the defined river banks on either side. You can see how the water has come up around the site. This right here is dry fuel storage which is why --

and it's built up to 1,009 feet. So, that's showing its dry. They built an earthen berm around the switch yard. This is the building that I mentioned flooded first. They built initially sandbag berms that didn't hold very well. Then they went in with a cofferdam type system to build a better earthen dam, and then also backed that up.

DR. NOURBAKHSH: So, this was done at the time of this -- as they saw the water coming.

MR. KIRKLAND: AS they saw the water coming.

DR. NOURBAKHSH: So, they did this -- this was an emergency action to get this berm built.

MR. KIRKLAND: Correct. The berm around the switch yard was not there prior to the floods. The complications, the biggest complications that occurred the day after the Notification of Unusual Event. There was a breaker fire in the 480 volt distribution system. It was not a result of the flood. It did not impact the flood; however, it took significant focus away from personnel being able to mitigate the flood.

They also had a rupture of the Aqua Berm. In the middle of the night a worker was working with a Bobcat, brushed up in one corner up against the berm and it tore the side of it, and then it just kind of

caused a collapse all the way around. So, the berm itself basically went from there keeping all of the structures inside of it dry, within 15 minutes it was basically a flooded site.

And back to your question, what that did was put the water up to the buildings. The buildings were sandbagged at entrances. For example, the turbine building because their procedure called for that, and the Aqua Berm was an asset protection feature, so they were certainly within their procedures, and they were certainly within their design and licensing basis with all of the confusion on that on the safety analysis report. And 1,006 feet 10 inches is below the 1,007 feet for hardened structures.

There were also impacts to site access. With the water as we saw in the aerial view, backed up, the licensee made a series of elevated walkways that would get us from the top of the hill down, walkways into the plant and up and over the Aqua Dam. They also had security impacts where it was harder for security guards to do perimeter watches. They lost a lot of their IDS systems and things like that, but they took adequate compensatory measures to take care of that.

This is a pretty good photo of the Aqua

Dam itself. It's about 12 feet at the base. It can be filled to about 10 feet high. It kind of adjusts to how much protection you need. This picture was taken before the rupture. A couple of weeks after the rupture the licensee successfully installed another Aqua Dam. The owner of the company who was out there believes it's easier to install these in flooded locations anyway, and they basically built it around the same power block they had before floating it on top of the water, filled it with water until it rested on the ground, and then pumped the water from inside out to re-establish more normal access for personnel.

The licensee had continual assessment of their on and offsite emergency response. The biggest impact that they had were sirens that were in flooded out areas. They did coordination with the state and local authorities, our daily calls with the Army Corps of Engineers, they had their daily calls with state and locals. Although most of the areas where sirens were flooded out were areas that were inaccessible by people that would have had to evacuate by then anyway. They did maintain their emergency preparedness capability throughout the event, and maintain physical security in accordance with the security plan.

The response that we had at the NRC, my

resident inspector and I were on site. We were augmented by other NRC staff to the point where we provided 24-hour coverage during the event. That started from when they declared the usual event on June 6th until shortly after the second Aqua Dam was installed. At that point, we went away from 24-hour coverage, but we stayed in seven day a week coverage, so my resident and I at that point just adjusted our schedules so we covered the weekend, as well as Monday through Friday.

MEMBER SKILLMAN: Could we talk just a minute about the operating staff? Here you had this flooding not just confined to the Fort Calhoun area, but in the local area, as well. And I've got to think that men and women who worked at the plant had some challenge, or great challenges getting to work. And, therefore, the site may have had difficulty staffing its emergency response organization, and maybe its leadership billets. Can you talk to that for a minute, please?

MR. KIRKLAND: The majority of people who had issues getting to work were the people who live in Iowa. And, basically, most of the roads in Iowa were flooded to the point, the main north-south interstate was just completely gone.

MEMBER SKILLMAN: Okay.

MR. KIRKLAND: So, the challenges for the people that lived in Iowa were commutes that would take them 20 minutes were now taking them an hour and a half. Not a lot of people live in Iowa. Even Blair, which is the closest town to the north had very little impact to the flood. Omaha to a much lesser extent which is where most of the people live. I don't ever remember an operating staff or a security staff being impacted by not having the people available. Omaha, or Fort Calhoun's EOF is actually in Omaha, which is closer to where most people would be in the event that they would have to man the EOF. The TSC, which is on site with the people who were they, and they generally got their ERO set up that most of the TSC responders live in Blair and Fort Calhoun, and most of the EOF responders live in Omaha, so it did not appear that the community flooding outside the plant had any adverse impact on their ability to staff their ERO.

MEMBER SKILLMAN: Thank you.

MR. KIRKLAND: There were several performance issues that we had coming out of the flood. Obviously, the restoration of the plant itself from the flood, the breaker failure and the fire, and the corrective actions associated with that, vendor

modifications as part of the breaker failure, and equipment service life. When we took all of those factors, plus the fact that the plant had been shut down since April, we made an Agency decision to transition to oversight in the manual Chapter 0350 process, which is outside the ROP. Where we're at with that, we've developed an issued the charter and the action plan. We've held several public meetings in Omaha. We have one with the public about every six weeks. We've developed the restart checklist and the confirmatory action letter which will be released shortly. And shortly after that, I'll get to the inspection plan here on this next slide.

The licensee as a result of this has formed a partnership with Exelon Corporation to help them manage their performance improvement. They've also provided a plant manager for operation of the facility. The existing plant manager is on rotation at INPO. We have -- or they completed a safety culture assessment, the results of which have not been provided to us yet. And their integrated performance improvement plan, which is their overall plan to get better, once they release that, we will be able to put together our inspection plan to make sure all of their issues are taken care of.

Their commitments to restart are restoration of the plant, as well as the plant systems and the equipment, the equipment reliability, and a detailed look at their design and licensing basis. And with that --

MEMBER SIEBER: Are they still shut down?

MR. KIRKLAND: Any other questions?

DR. NOURBAKHSH: Your river level, you had this nice historic line on the --

MR. KIRKLAND: The dam?

DR. NOURBAKHSH: Yes, on the flows, the maximum flows.

MR. KIRKLAND: Right.

DR. NOURBAKHSH: But you didn't have a -- what's the maximum historic level, what river level?

MR. KIRKLAND: 1,009 feet is the flood of record. That flood of record was in 1952 before the dam system was complete. In the history of Fort Calhoun, the two biggest flood years were 1994 and 1997, 1997 was the last or the max flow rate. Neither of those years did they enter the notification of unusual event at 1,004 feet. So, once they entered that, they were really in unchartered territories as far as river level went.

DR. NOURBAKHSH: Okay. So, post Fort

Calhoun operations was always below the 104 --

MR. KIRKLAND: That's correct.

DR. NOURBAKHSH: -- feet above mean sea level.

MR. KIRKLAND: Correct.

DR. NOURBAKHSH: And in 1954 the highest one was around -- historically upon record was 109--

MR. KIRKLAND: 1,009.

DR. NOURBAKHSH: 1,009, excuse me.

MR. KIRKLAND: Roughly in there.

MEMBER BLEY: Roughly.

MR. KIRKLAND: Thank you very much.

MEMBER SIEBER: Any other questions? If not, thank you, Mr. Kirkland.

MR. KIRKLAND: Thank you.

MEMBER SIEBER: And the last one would be H.B. Robinson.

MR. ROBLES: Good afternoon, everyone. My name is Jesse Robles. I am in the Operating Experience Branch in the Office of Nuclear Reactor Regulation, and today I'm going to talk about an event an H.B. Robinson involving an automatic reactor trip and safety injection with fires, affecting safety-related equipment.

A brief overview of the plant, H.B.

Robinson is located near Hartsville, South Carolina. It is a three-loop Westinghouse pressurizer water reactor, 710 megawatts electric. It commenced operations in 1971. The next slide shows a simplified layout of their AC electrical distribution system. And I'm going to go through their normal lineup, because on the day of the event, March 20th, 2010, they were at full power and normal electric lineup.

They have basically two transformers of the unit, auxiliary transformer which feeds bus 4 and bus 1, and those buses feed bus 2 and bus 5. Up at bus 2, that feeds a 480-volt bus E-1. The other transformer is a startup transformer which feeds bus 3, which in turn feeds 480 bus E-2. So, there are normal power lineup, as such.

So, March 28th, 2010, just before 7:00 p.m., they experienced a fault on feeder breaker to —-- or on the feeder cable, sorry, to bus 5. This bus was installed in 1986 as a design modification and the design modification package it specifies certain type of cable with certain insulation and fire protection properties. And the cable that they ended up installing did not meet that specification. In addition, when they pulled the cable --

DR. NOURBAKHSH: Intentionally?

MR. ROBLES: Huh?

DR. NOURBAKHSH: I mean, they knew that when they installed it?

MR. ROBLES: No, they didn't.

DR. NOURBAKHSH: Okay.

MR. ROBLES: I guess that's one thing, they installed another thing. And when they installed it, also in addition to installing the incorrect type of cable, the procedure that they used for installing didn't take into account the tension limits of the cable, so they actually -- when they inspected the cable they actually had several kinks in the cable that indicated that it was installed incorrectly, as well.

Now, breaker 24 should have opened to isolate that fault, and isolate bus 5; however, a failed or a defective fuse in the control power circuit for the breaker prevented it from having control power, so the breaker couldn't cycle open. So, the fault spread to bus 5, the fast transfer starts to close breaker 19 which degrades the voltage on bus 3, which as you recall feeds emergency bus 2. So, what happens after that is the bus separates from bus 3 breakers associated with that 1528 open, and then the EDG starts up to power 40 bus volt E-2.

MEMBER STETKAR: Jesse, I didn't see -- I'm going to interrupt you for a second here. We're getting a little late on time, but we can run long. I didn't see anything more about that nice pretty picture of the fuse that you showed there.

MR. ROBLES: Yes.

MEMBER STETKAR: Are you going to talk more about that?

MR. ROBLES: Yes.

MEMBER STETKAR: Okay.

MR. ROBLES: Okay. So, the line up following the trip and fault is the unit auxiliary transformer failed, buses 4 and 5 are de-energized, breaker 24 is still closed because it doesn't have control power to open, breaker 20 open, 19 initially tried to close for the fast transfer but it ended up opening, so the start up transformers feeding buses 1, 2, and 3 and bus E-1 is fed by bus 2 as the normal line up, but bus E-2 is being fed by the emergency diesel generator.

Following this initial event, the reactor trip, they got a generator lockout, a series of equipment and human performance issues complicated the event. What I didn't mention because it's in the previous drawing was sort of simplified for clarity,

a lot of 4160 volts of volt buses feed a lot of different equipment, so they -- when that equipment became de-energized, a -- the return valve for the cooling water and the RCP thermal barrier heat exchanger went closed, and that caused them to not have flow to the thermal barrier heat exchanger, so they had inadequate seal cooling. In addition to --

mEMBER SKILLMAN: Just if I could ask, what caused that valve to close, please?

MR. ROBLES: When they lost the instrument bus, it's powered off the 40 volt bus that they momentarily lost, the one that the EVG is power, E-2. They got a false high flow signal on that because it was de-energized. So, the valve actually closed -- the logic told the valve to close, so it actually closed.

MEMBER SKILLMAN: Command it closed and it went closed.

MR. ROBLES: Yes.

MEMBER STETKAR: It did exactly what it was supposed to do for its safety analysis.

MEMBER SKILLMAN: Thank you.

MR. ROBLES: In addition to that, due to loss of a lot of the other electrical equipment they -- the moisture separator reheater valve alternating drain valves failed open which created a steam flow

path to the condenser which caused an excessive cool down. And that ultimately resulted in their safety injection.

In addition to that, the charging suction was supposed to transfer from the volume control tank to the refueling water storage tank and did not do so due to an improperly set I&C control module.

During the event, the operators were trying to reset the main generator lockout which cause breaker 19 to close again, which re-energized the fault bus 4, and bus 5, and the fault is in between those buses, so that caused a second electrical fire. And that fire actually -- I'll show some pictures later on, but it caused damage to both DC buses, and that in conjunction with the fire prompted the licensee to declare an alert at the site.

This is a picture of bus 5, which is -- up here is where the fault started. That's where the cable failed and burned. And these are just from two different angles. This is basically showing the damage of all the smoke and soot. And this picture is the back of bus 4 where breaker 24 is, the breaker that failed to open. That breaker -- that panel blew up and caused damage on an adjacent panel that caused one of the trains of DC got grounded because of this, and the

damage to the other one got the grounds on the other train of DC. And these two pictures just show the top of 4160 plus 5, and the cable trays on top of that, some of the soot and fire damage. And this is an actual closeup of the conduit of the cable that failed that started the initial faults.

In response to the event, the NRC and the special inspection team which was subsequently upgraded to AIT is the team became aware of the fact that they had degraded cooling that resulted in 14 unresolved items, and follow-up inspection resulted in multiple green findings, and two white findings. The first one is for failure to follow procedures required by tech specs, and failure to basically monitor plant parameters when the event was happening. They didn't realize that they had the flow control valve from the thermal barrier heat exchanger closed. They didn't monitor before they got the safety injection due to the excessive cool-down. And the other one is failure to adequately design and implement operator training.

They also got additional oversight as a result of this. They would transition in the reactor oversight process action matrix to COM 3, and then they got out of COM 3 fourth quarter of 2011.

One of the operating experience products

that have been generated because of this event were information notice on the importance of understanding circuit breaker control panel indications. This is the one where the fuse that was -- it didn't -- it wasn't actually a blown fuse. The fuel had a defect in it, and it -- you see the picture. There's a separation between basically the filament and one of the terminals, so this condition existed in 2008.

It was discovered seven times between 2008 and the event. And the breaker is classified as a critical component, which means that they have to initiate a condition report on the condition. They only opened some work requests, and it stayed in plant status for all that time. And they attributed -- the breaker has indicating lights that say whether it's open or it's closed. Those lights were not illuminated, so they changed out the bulbs as corrective action initially, that didn't work so they attributed it to a faulty socket. So, they left the work request in an open status pending when they would receive the parts for that socket. They did a fleet wide --

MEMBER BLEY: You didn't say out loud for everybody. What that really meant was there was no control power for the break.

MR. ROBLES: Yes, exactly. The circuit didn't have power to it.

MEMBER STETKAR: And because most of the folks here are not electrical, had the circuit breaker had control power --

MR. ROBLES: It would have opened.

MEMBER STETKAR: -- we would not be hearing this story.

MR. ROBLES: Yes. They would have one small fire and that was it.

MEMBER BLEY: Charlie, it had -- there were no indications in the control room, but down at the breaker panel they noticed the lights. Somebody early on blamed it on the socket, and nobody chased that for a year and a half. This is one of the events that lead us to keep saying that that maintenance program is really important to get things in it and out of it fast, and understand each failure you put into it.

DR. NOURBAKHSH: I was failing to understand why somebody didn't work on this particular lack of control power. I mean, the lights are out, I mean, it's --

MEMBER BLEY: People kept reporting it. Then other people would look at it and say oh, there's a work order on it.

DR. NOURBAKHSH: For a year and a half?

MEMBER BLEY: Yes, for a year and a half.

MEMBER SKILLMAN: This, to me, is the poster child for why our thick magnifying glass needs to be on the effectiveness of the correction action program. This should have come right to the top of the heap somewhere along the line, and it was just ignored over and over again. It was just dismissed.

MEMBER BLEY: So, they're -- they've changed the way they administer their critical action plan now. They're probably better now than most place, but before they weren't.

DR. NOURBAKHSH: Nobody is ever perfect but I just -- every time I hear -- I mean, I love these sessions because it keeps illuminating items that -- I mean, it's just like the head tensioning thing. How many times do you have to make these rationalizations during process of a procedure before you say why do I have to rationalize what I'm doing in this procedure when it's been done before? And things are -- we're making little changes over cause, but that should have raised a flag right away. I mean, there's another one. The lights are out, a month later the lights are out, seven times he just said it was noted that it had been worked on.

MEMBER BLEY: And it didn't have a review process.

DR. NOURBAKHSH: Yes.

MEMBER BLEY: So you can always say retrain people but if you don't put a system in place to make it work it doesn't do you a damned bit of good.

DR. NOURBAKHSH: Well, if the toilet wasn't flushing that's one thing, but when you've got major breakers --

mEMBER SKILLMAN: That's one that gets fixed by --

DR. NOURBAKHSH: I'm not going to comment on why.

MEMBER BLEY: I was involved in chasing this a little bit. But one thing I learned from some folks in the plant that is beyond my experience, apparently there are some breakers for which those lights are not indicators of control power. I didn't know that but I learned that there are some. So, that having those out -- I mean, to most of us when we saw it it was my God there was no control power, but if we read another line, apparently -- and some of the people at this plant had been at other plants where that wasn't true. And I'd never seen that.

DR. NOURBAKHSH: Is there a label plate

there that says control power? So, they're just lights.

MEMBER BLEY: They're lights.

DR. NOURBAKHSH: With no --

MEMBER BLEY: But almost everybody knows they get their power from --

DR. NOURBAKHSH: Oh, everybody knows. I hate those words.

MEMBER BLEY: Everybody knows it.

DR. NOURBAKHSH: It's not as well known as you thought --

MR. ROBLES: So, basically, they discovered a similar condition at Crystal River where they found a bunch of breakers that the lights weren't illuminated. However, they only found one that actually had no control power to it. Most of them were actually just light bulb issues. But the Agency felt the need that we needed to issue an information notice on this issue, so we did. And it highlights the issue at Robinson.

In addition, we also issued information notice on instrumentation control module hardware configuration and procedure issues which addresses the failure of the VCT, the charging suction, swapping the volume control tank to the RWST, the configuration

there.

MEMBER BLEY: That was during a maintenance or installation of equipment --

MR. ROBLES: Yes.

MEMBER BLEY: And it was installed the way the instruction for installation told them to do it. That's true, isn't it?

MR. ROBLES: Yes.

DR. NOURBAKHSH: Did anybody go back and pull the string on the cables that were the wrong cables installed however many years ago? I mean, they called for a certain spec on the cables in terms of the insulation and/or the whatever, I've forgotten what you exactly said, but they got delivered something that wasn't what was bought. Like I ordered a Ford, I got delivered a Chevy.

MEMBER SIEBER: Then maybe you ordered the wrong thing.

DR. NOURBAKHSH: Pardon?

MEMBER SIEBER: Maybe you ordered the wrong thing.

DR. NOURBAKHSH: That's why I asked did anybody find out why in the world nobody found out that they got the wrong cable, because it obviously couldn't stand the surface.

MR. ROBLES: I think that might be -- I'll have to look into it but I think it might be addressed in one of the -- because they actually got an inspection finding for that.

MR. LUBINSKI: This is John Lubinski. They did pull the string on it but I don't have the answer exactly what they did, but that was one of the items they were looking into, is the reason that they had the wrong cable in that area.

MR. ROBLES: It was one of the unresolved items. And I believe they had a finding on it, too.

MEMBER SIEBER: Okay. Our package has a couple of more slides which are pictures of the failures.

MR. ROBLES: Yes, I showed them during the presentation just as reference.

MEMBER SIEBER: Okay. Does anyone have any additional questions?

MEMBER BLEY: Only that for the rest of the members if you didn't have a chance to read everything about this event, I'd urge you to do it, because there's a lot of very interesting things beneath the story we just heard. Not just interesting, important to other things we look at.

MEMBER SIEBER: I imagine there is plenty

of opportunities for confusion of the operators, too.

MR. ROBLES: During this event, yes. They were in multiple procedures and responding to the fire.

MEMBER SIEBER: Right.

MEMBER BLEY: There have been -- to that point, Jack, there have been -- I think the NRC directed some of it, but I know the utilities and people they work with have done more of it, have done a fair number now of simulator exercises that aren't the plain vanilla stuff you usually get. They have notable things going on that can confuse people, and the results are indicating we've got to figure a better way to make the control room work, because they haven't all -- people are learning a lot from those exercises.

CHAIRMAN ARMIJO: I have a general question. What does the INPO do with an event like this? Do they go out and meet with -- I'm asking my colleagues as well as yourself. Do they go out and meet and pull all key people together to get lessons learned or vast --

MEMBER SIEBER: INPO?

CHAIRMAN ARMIJO: Is it INPO or is it some other --

MR. ROBLES: INPO actually put out a significant event report --

MEMBER SIEBER: SER.

MR. ROBLES: And they also -- just one for the event and one where they highlighted issues such as this with different sites having a command control or oversight.

CHAIRMAN ARMIJO: Is there something like an annual meeting, or something that addresses these kind of events industry wide that brings people together and says hey look guys, these are serious things that have happened. And we want everybody to know that. And that does go on?

MEMBER RAY: Yes.

MEMBER SIEBER: Licensee is --

MEMBER BLEY: And if you recall, we had a conversation with them and one of their comments was they're pushing people to run drills that really run much more complicated scenarios to get people used to that kind of environment, because it's a tough environment to operate it.

CHAIRMAN ARMIJO: Yes.

MEMBER RAY: Yes, people don't lack any motivation to try and prevent stuff like this from happening --

CHAIRMAN ARMIJO: No, I understand that.

MEMBER RAY: -- at their plant. It's the stuff that hasn't happened yet that's a little tougher.

MEMBER SIEBER: Okay. Is there any further questions of the staff? Well, I think these were excellent presentations and we certainly appreciate you coming to inform us, particularly of all the detail you offered. It helps us understand and puts a lot of things in more perspective as we examine what the NRC is doing, and what licensees are doing, and how best to -- that we can contribute to overall plant safety. So, we certainly appreciate the fact that you do the jobs that you do, and you come and tell us about it, so thank you very much.

DR. NOURBAKHSH: I have one other observation, Jack, it was interesting on the Robinson thing how they were -- we keep talking about single failures leading to events, and yet if my mind correctly counted there was at least three or maybe more --

MEMBER BLEY: He didn't go through them all. There were four or five latent --

DR. NOURBAKHSH: Independent things?

MEMBER BLEY: Independent latent problems

sitting there that really complicated this event.

DR. NOURBAKHSH: And yet, we -- and they failed in the -- they failed to operate. They didn't necessarily get caused by this, therefore, they were failed to operate. Well, they weren't able to operate and they allowed the casualty to proceed.

MEMBER BLEY: And made it much more complex.

DR. NOURBAKHSH: It's the old argument about single failure design basis as opposed to multiple --

MEMBER BLEY: Isn't that resetting the '86 relay thing that we powered it --

DR. NOURBAKHSH: Yes.

MEMBER BLEY: You know, most people when you first read that, my God, why would they do that? Well, they talked it over and including some fairly senior people in the plant, and now it's in their training. But the things they thought resetting that would do didn't include what actually happened. They thought it was just setting everything back up to operate again, and they're training is done, and actually it repowered everything, and that was a surprise.

MEMBER STETKAR: And more importantly, it

-- as an old operator and having reset '86 relays there are actually things -- I mean, there -- you say well, why the heck would they even reset that? There are actual reasons to reset the '86 --

MEMBER BLEY: The procedure has you do it.

MEMBER STETKAR: Well, and because it enables some stuff that's locked out that you kind of need in a normal plant trip response, so it's not like why with an electrical fire would you go out and reset a lockout relay. It is something that, you know -- that wasn't an error. They just didn't realize what other stuff that it did.

MEMBER SIEBER: Okay. Any additional questions or comments? If not, Mr. Chairman, I turn it back to you.

CHAIRMAN ARMIJO: Okay, thank you, Jack. Well, I'm sorry I missed this. I am going to have to rely on my colleagues to pump me up on this stuff. It looks like good presentations.

We're going to take a break for 15 minutes. Let's be back at 20 of 3.

(Whereupon, the proceedings went off the record at 2:22:42 p.m.)

U.S.NRC
UNITED STATES NUCLEAR REGULATORY COMMISSION
Protecting People and the Environment

Advisory Committee on Reactor Safeguards

H.B. Robinson – Automatic Reactor Trip and Safety Injection with Fires

Jesse Robles
Operating Experience Branch
Office of Nuclear Regulatory Regulation
June 7, 2012

H.B. Robinson Steam Electric Plant

- Located near Hartsville, SC
- Westinghouse 3 loop
  - 2339 MWt
  - 710 MWe
- Commenced operations
  - March 1971

Inadequate Cable and Installation

Failed Fuse in Control Circuit

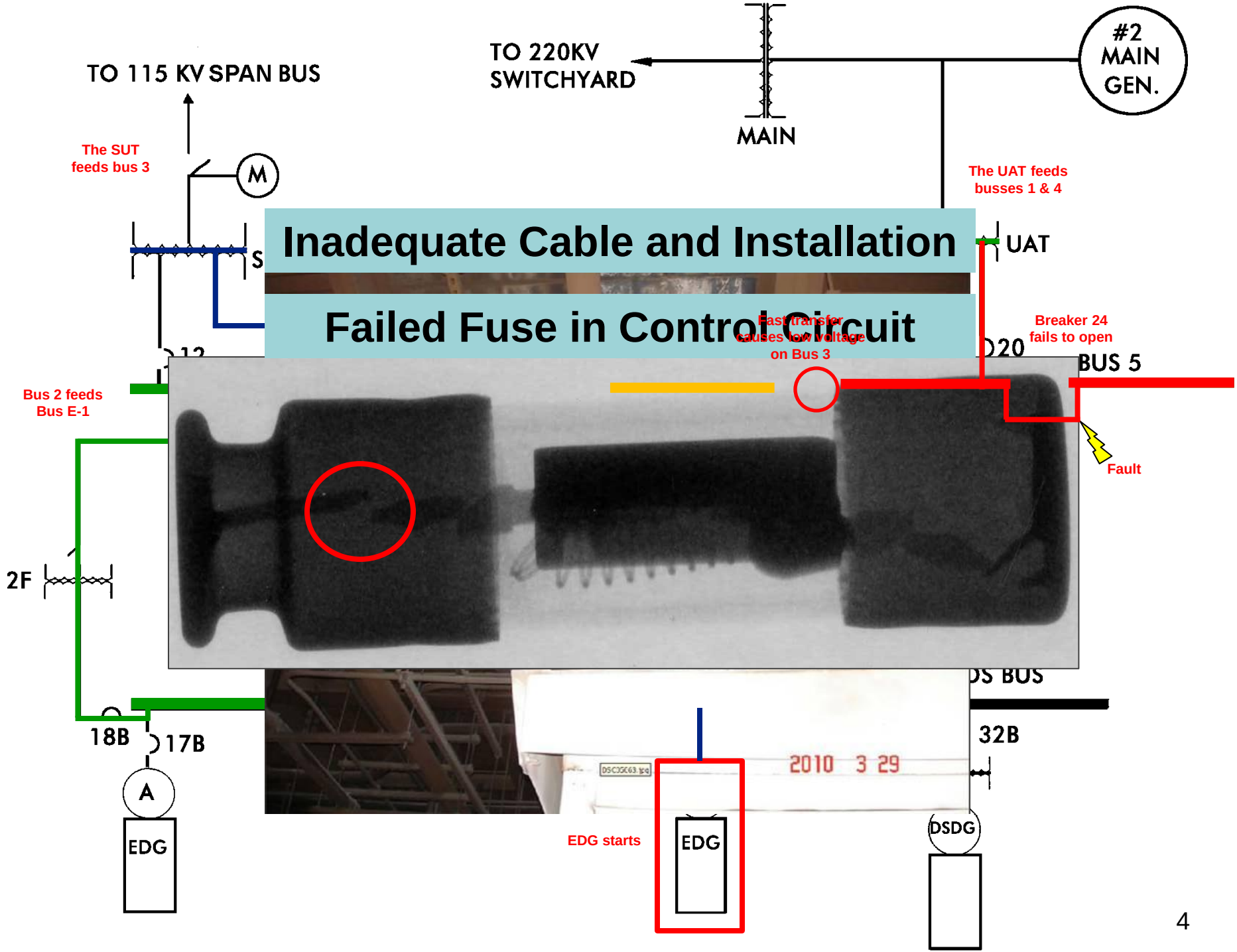

Line-up Following Trip and Fault

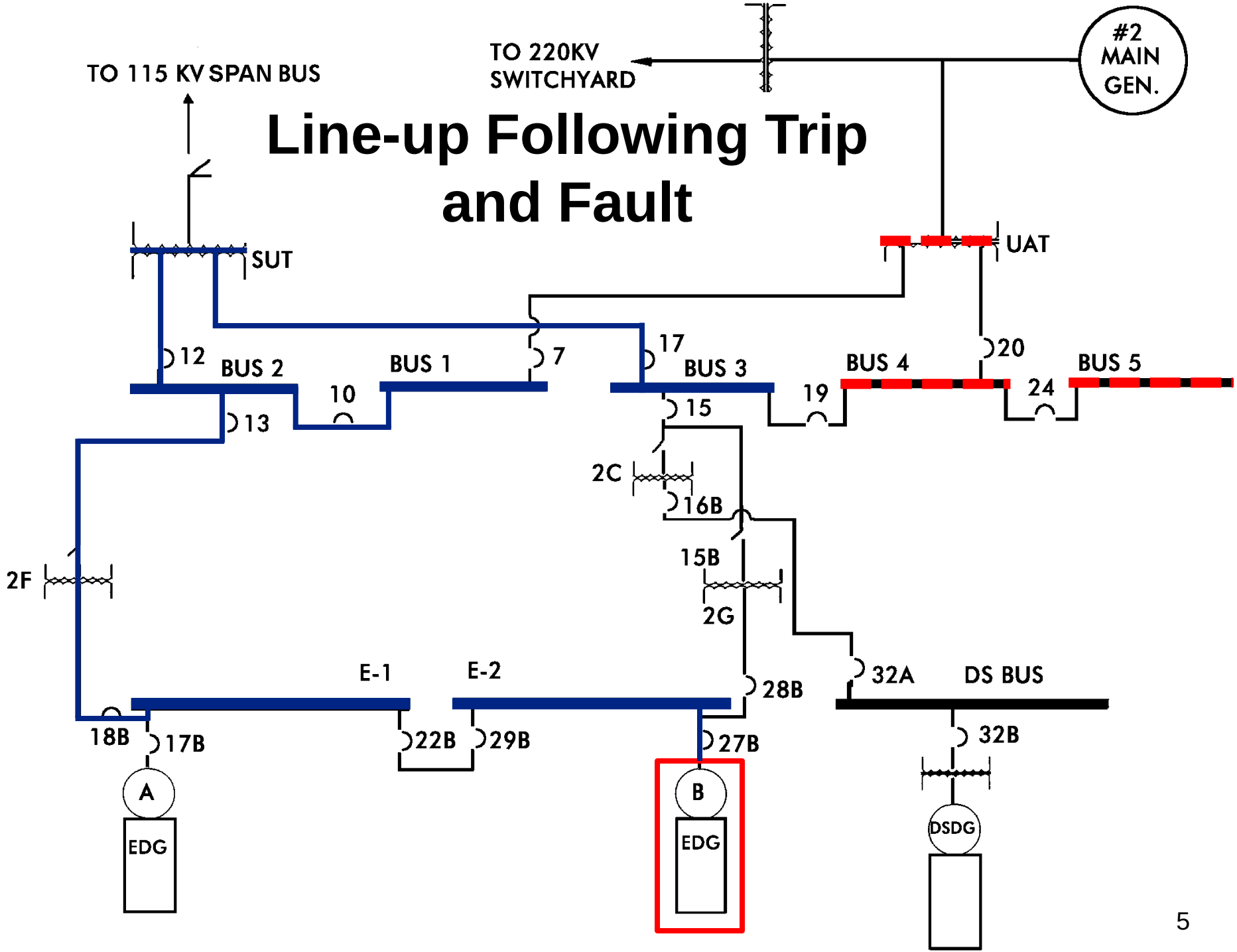

Event Description

- After the trip, a series of equipment problems and operator performance issues complicate the event:
  - Inadequate seal cooling caused by loss of CCW to RCP thermal barrier heat exchanger
  - Excessive cooldown and safety injection caused by MSR alternate drain valves failing open
  - Degraded seal injection caused by charging suction failing to transfer from VCT to RWST (not recognized for 46 minutes)

Event Description

- Operators inappropriately reset the main generator lockout, re-energizing the faulted buses causing additional damage to electrical switchgear and a second electrical fire

- Fault and fire damage causes grounds on both DC buses

- An Alert was declared for fire resulting in degraded safety-related systems

Side of bus 5

Back of bus 5

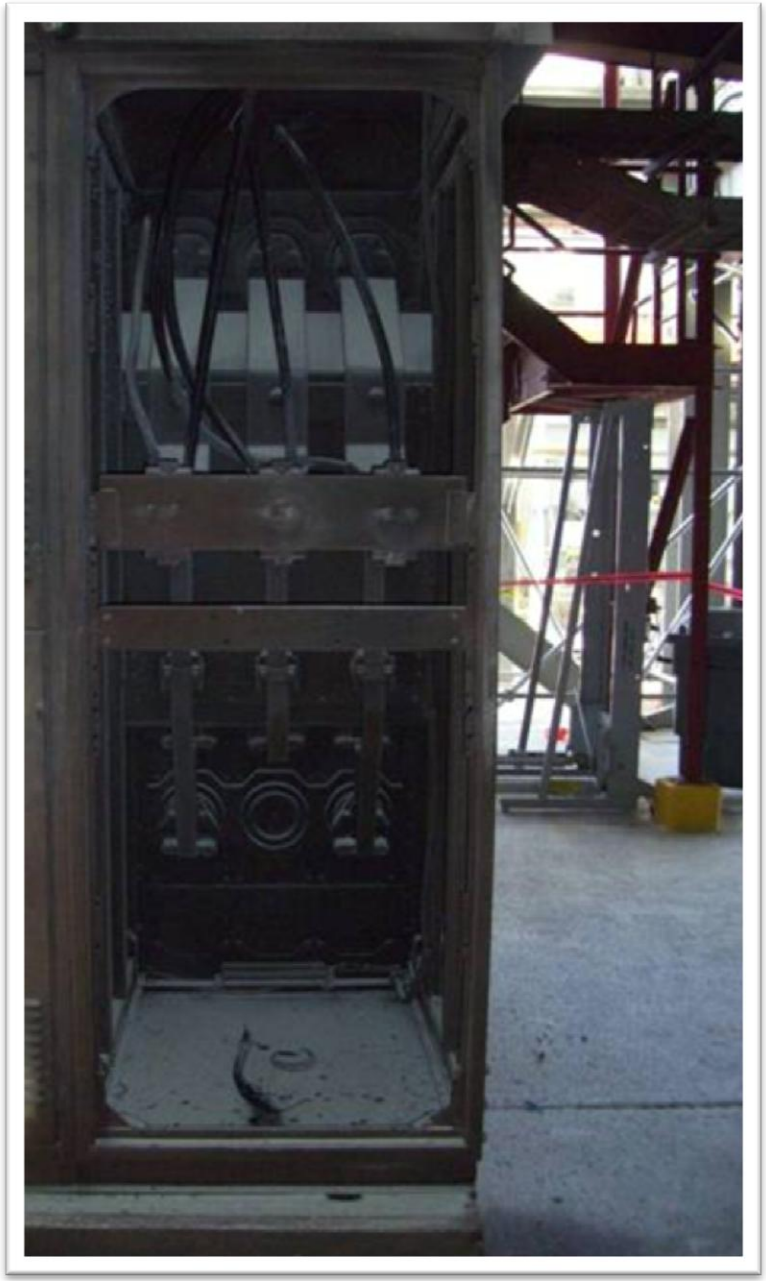

4160V Bus 5

NRC Actions

- SIT sent to site March 30, upgraded to an AIT
  - 14 unresolved items

- Follow-up inspections resulted in 2 white findings:
  - Failure to follow procedures required by TS
  - Failure to adequately design and implement operator training

- Additional oversight as a result

Operating Experience Products

- Information Notice 2010-09, “Importance of Understanding Circuit Breaker Control Panel Indications”

- Information Notice 2011-22, “Instrumentation and Control Module Hardware, Configuration, and Procedure Issues”

U.S.NRC
UNITED STATES NUCLEAR REGULATORY COMMISSION
Protecting People and the Environment

Advisory Committee on Reactor Safeguards

Fort Calhoun Station – Flooding Event 2011

John Kirkland
Senior Resident Inspector
Fort Calhoun Station
June 7, 2012

Outline

- Facility Description
- Flood Design Levels
- Flooding Event Description
- Complications
- Licensee Response
- NRC Response
- Recovery Planning

Facility Description

- 500 MWe, Combustion Engineering PWR
- Operating License in 1973
- Site elevation 1004 ft msl

U.S.NRC
UNITED STATES NUCLEAR REGULATORY COMMISSION
Protecting People and the Environment

Facility Description

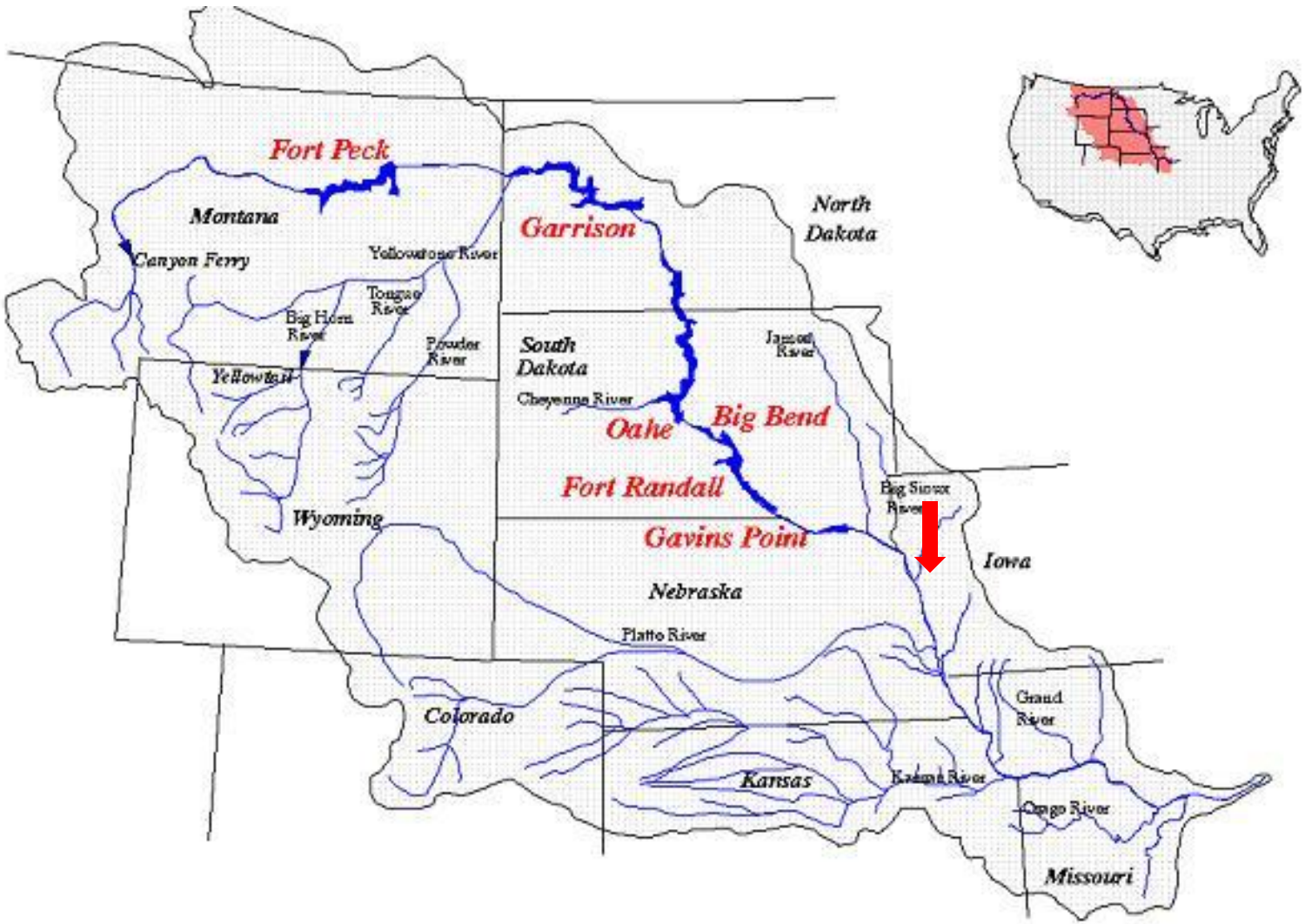

Flood Design Levels

Updated Safety Analysis Report (2009)

- Design flood elevation - 1,004.2 ft msl
- Accommodate flood levels of up to 1,007 ft msl without provisions
- Protection up to 1,009.3 ft msl using steel flood gates
- Protection up to 1,014 ft msl using sandbags and temporary earth levees

NRC Finding

Yellow finding during 2009 FCS Component Design Basis Inspection (CDBI)

- Deficiencies protecting structures above 1,008 ft msl
- Buildings not adequately sealed
- Sandbagging equipment and procedures inadequate

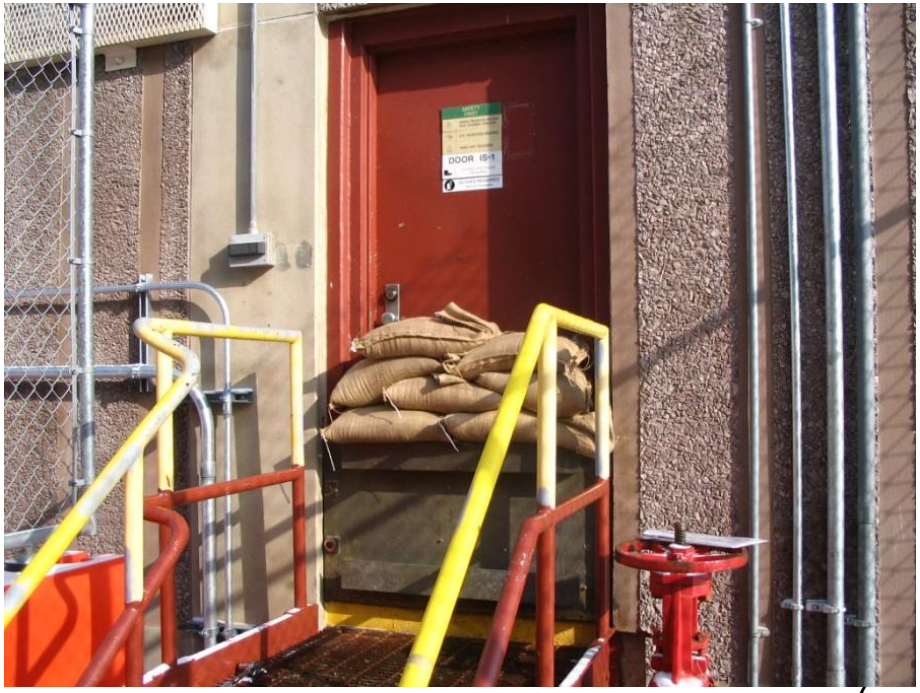

Conditions Leading to Event

- Scheduled refueling outage April 11, 2011
- Increased river flows beginning in May, 2011
- Outage suspended to combat rising river level

Dam Flow Rates

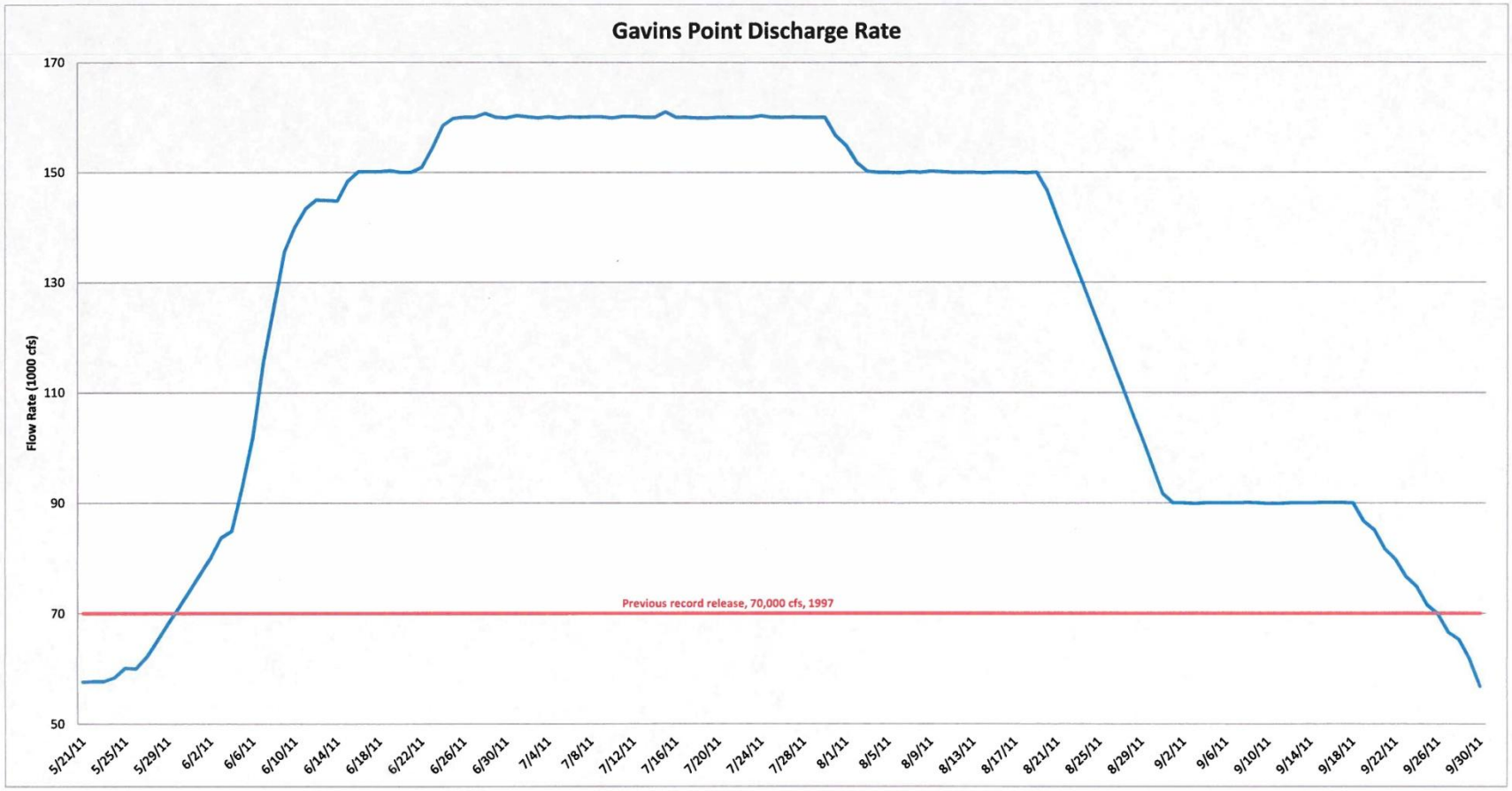

River Level

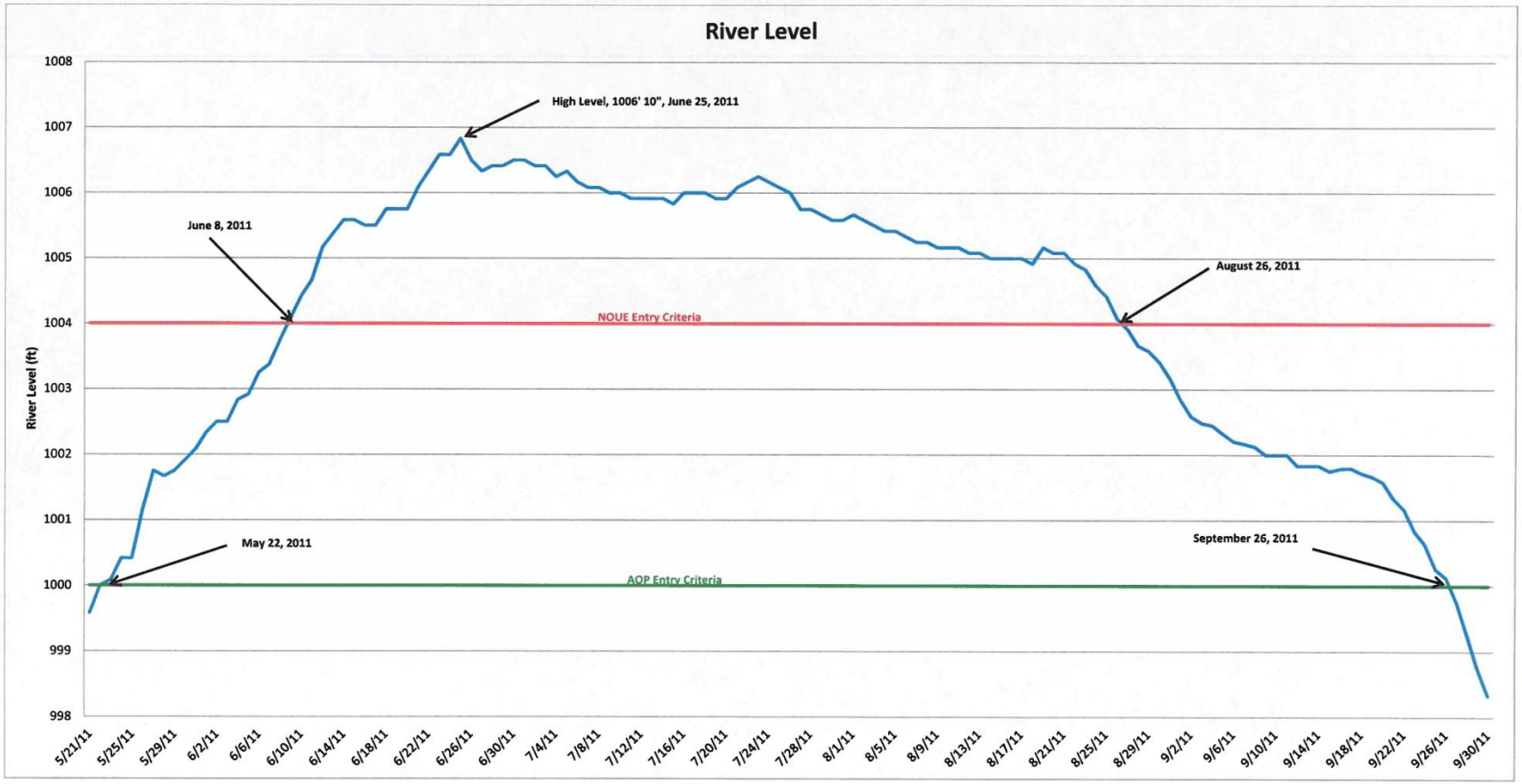
River Level
River Level (ft)
1008
1007
1006
1005
1004
1003
1002
1001
1000
999
998
High Level, 1006' 10", June 25, 2011
June 8, 2011
August 26, 2011
NOUE Entry Criteria
May 22, 2011
September 26, 2011
AOP Entry Criteria
5/21/11
5/25/11
5/29/11
6/2/11
6/6/11
6/10/11
6/14/11
6/18/11
6/22/11
6/26/11
6/30/11
7/4/11
7/8/11
7/12/11
7/16/11
7/20/11
7/24/11
7/28/11
8/1/11
8/5/11
8/9/11
8/13/11
8/17/11
8/21/11
8/25/11
8/29/11
9/2/11
9/6/11
9/10/11
9/14/11
9/18/11
9/22/11
9/26/11
9/30/11

Event Description

- Entered Abnormal Operating Procedure on May 22, 2011
- Area protected up to 1009 ft msl
- NOUE declared on June 6, 2011
- The river level crested on June 25, 2001 (1006 ft, 10 in msl)

Complications

- Breaker Fire
- Aqua Berm Rupture
- Impacts to Site Access/Security

Aqua Berm At Fort Calhoun

Licensee Response

- Continual assessment of on-site/offsite emergency response
- Emergency Preparedness & response capability maintained throughout the event
- Physical Security maintained in accordance with Security Plan

NRC Response

- Resident Inspector staff at the site was augmented by other NRC staff.
- Performance issues:
  - Flood restoration
  - The breaker failure and fire
  - Vendor modifications
  - Equipment service life
- Site transitioned to IMC 0350 Oversight:
  - Charter and Action Plan developed
  - Initial public meetings conducted
  - Restart Checklist developed
  - Inspection Plan and CAL being developed

Licensee Response

- Partnership with Exelon
- Management changes
- Safety culture assessment in progress
- Integrated Performance Improvement Plan (IPIP) developed

Key OPPD Restart Commitments

- Site Restoration
- Plant Systems & Equipment
- Equipment Reliability
- Design/Licensing Basis

U.S.NRC
UNITED STATES NUCLEAR REGULATORY COMMISSION
Protecting People and the Environment

QUESTIONS?

U.S.NRC
UNITED STATES NUCLEAR REGULATORY COMMISSION
Protecting People and the Environment

Advisory Committee on Reactor Safeguards

Brunswick Unit 2 - Failure to Properly Tension the Reactor Vessel Head Following Maintenance Outage

David Garmon
Operating Experience Branch
Office of Nuclear Regulatory Regulation
June 7, 2012

Brunswick Steam Electric Plant

- Located in southeastern North Carolina

- Unit 2
  - General Electric, BWR-4
  - Mark I Containment
  - 2923 MWt

- Commenced operations November 1975

Introduction

- During startup activities the licensee discovered unidentified leakage and eventually scrams the plant and declares an Unusual Event because of excessive leak rate

- Licensee investigation determines the reactor pressure vessel (RPV) head studs are not tensioned

- NRC conducts a Special Inspection

Event Description

- November 4, 2011: shutdown to address indications of a leaking reactor fuel bundle
- November 6, 2011: reactor disassembly commenced
- November 13, 2011: Reactor head tensioning activities commenced

Event Description

- November 13, 2011:
  - Reactor head tensioning completed including final stud elongation measurements
  - Licensee declares unit to be in Mode 4

- November 15, 2011:
  - Licensee commences startup activities

- November 16, 2011:
  - Unidentified leak, Unusual Event, Reactor Scram

As Found Conditions

- Leakage from between the RPV head and vessel
- Several RPV head nuts were not tightened
- Stud elongation measurements indicative of no tensioning

Hydraulic Tensioning - Overview

- Initial stud length measured to provide a reference
- Hydraulic tensioning
- Final stud elongation measured
  - 0.045 ± 0.004 inches (41-49 mils)

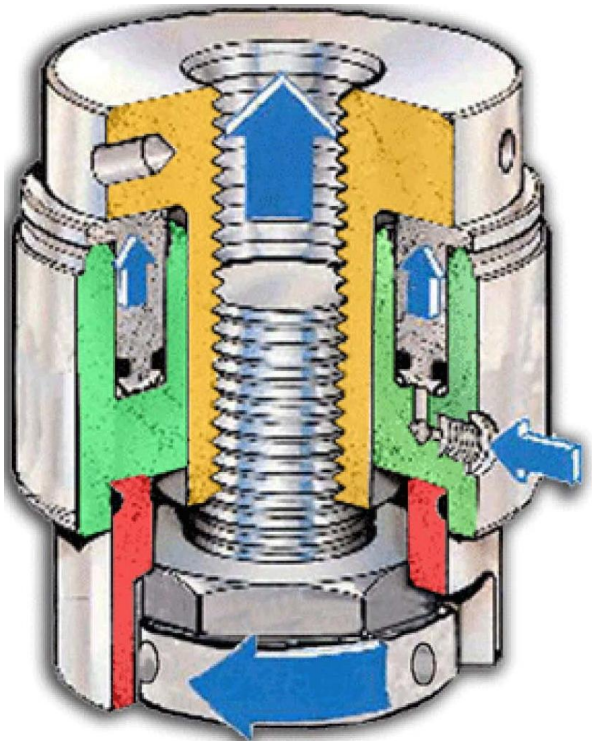

Vessel Head Carousel and Stud Tensioner

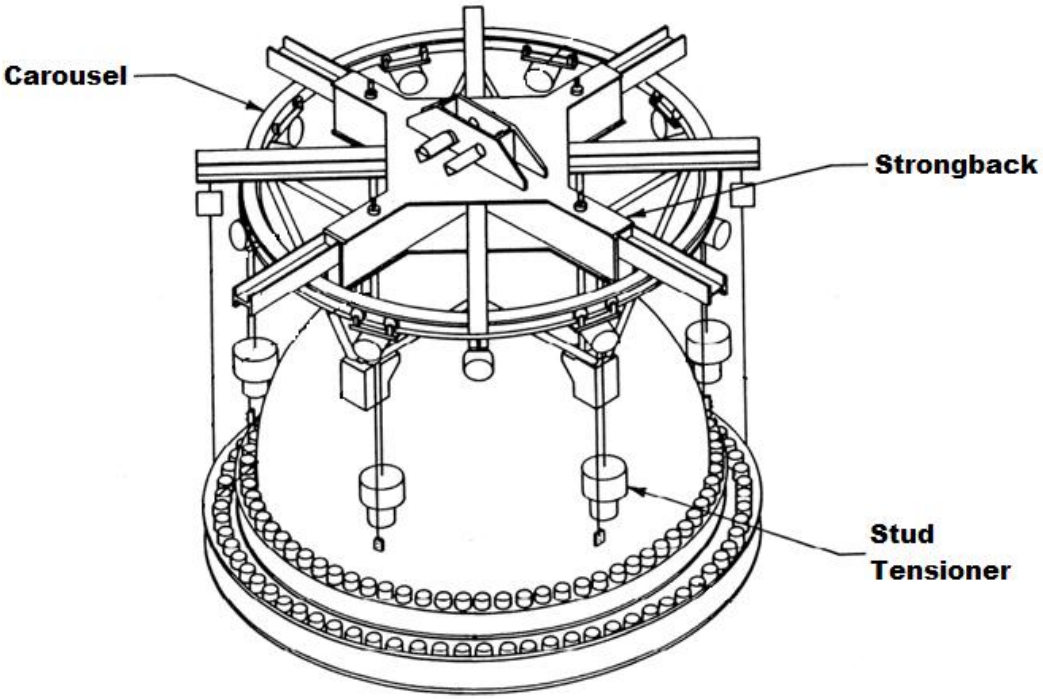

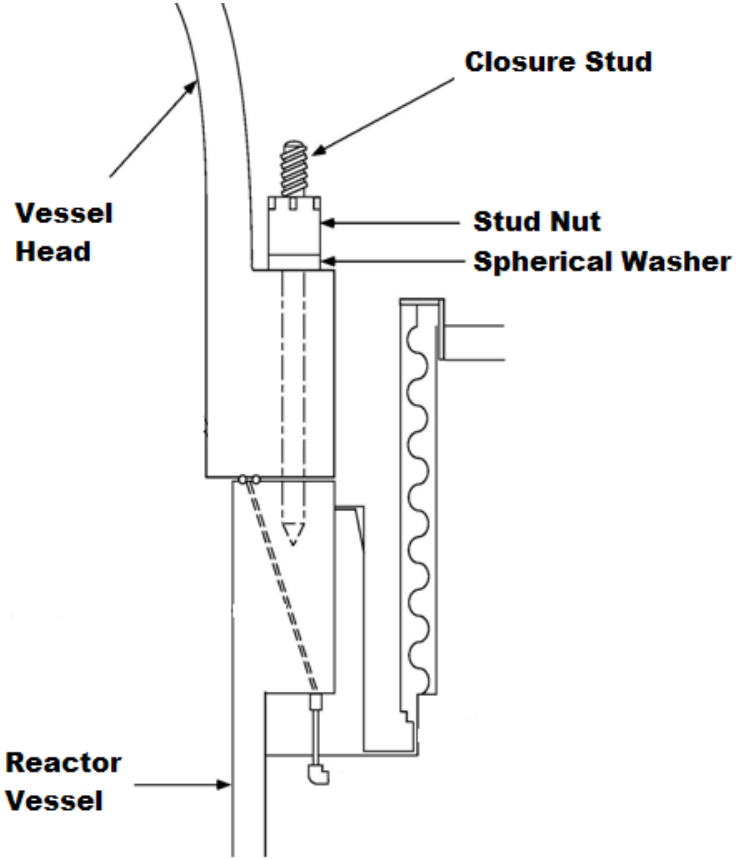

Hydraulic Tensioner Display

- Personnel misinterpreted the readings on the hydraulic tensioner
  - Instead of applying the required 13,000 psi, the operators only applied 1,300 psi

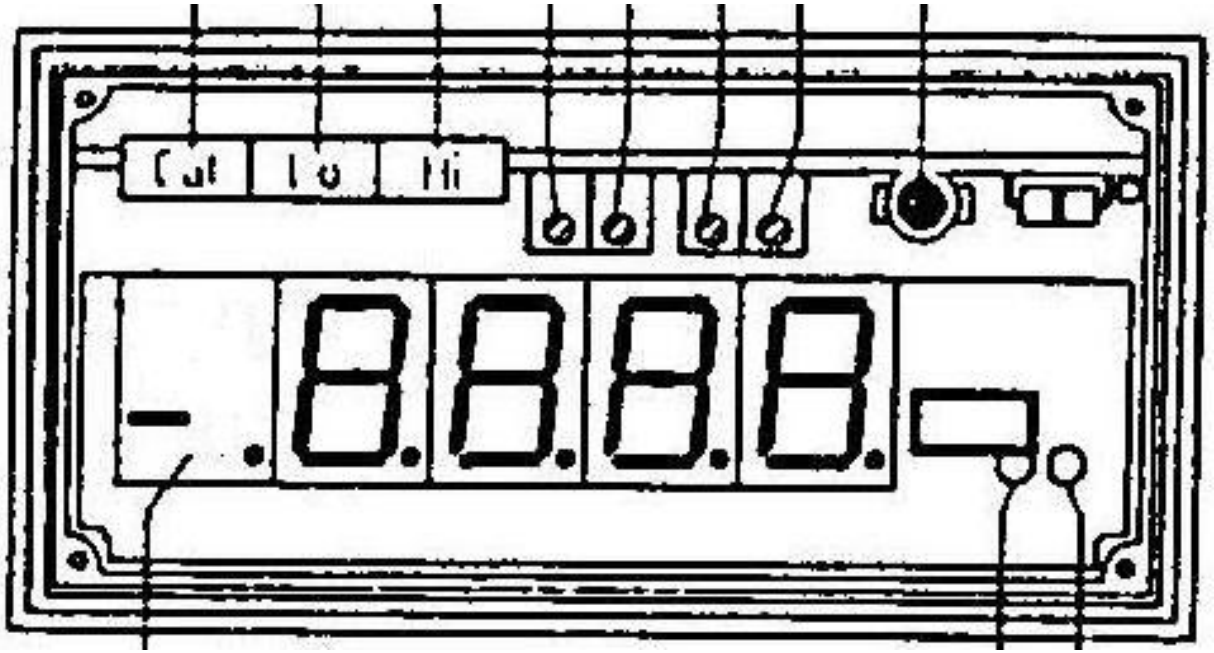

Stud Elongation Measurement

- Personnel misunderstood the readings on the SEMS III
  - Elongations were documented to be

    ≤ 0.004 inches (4 mils)
  - Personnel rationalized unexpected readings

Licensee Response

- Root Cause Analysis
  - “Failure to provide the proper training and procedure guidance to correctly interpret critical data used to validate the RPV head nuts were properly tightened”
  - Several contributing factors

- Safety Culture Assessment
  - Weaknesses in management, training, work practices and quality control measures

NRC Actions

- Completed Special Inspection Team reactive inspection (November 21-30, 2011)
  - Unresolved Item (URI) pending root cause analysis

- Completed URI inspection (April 4, 2012)
  - 3 Findings
  - Multiple human performance Cross-Cutting Areas

- Operating Experience Efforts