ANSI Radiography Equipment Standard

10 CFR Part 34

Licenses for Industrial Radiography & Radiation Safety Requirements for Industrial Radiography Operations

Sec. 34.20 Performance requirements for ind. radiography equipment

Equipment used in industrial radiographic operations must meet the following minimum criteria:

(a)(1) Each radiographic exposure device, source assembly or sealed source, and all associated equipment must meet the requirements specified in American National Standards Institute, N432-1980 "Radiological Safety for the Design and Construction of Apparatus for Gamma Radiography" (published as NBS Handbook 136, Jan. 1981)

ANSI N43.9

Radiological Safety for the Design and Construction of Apparatus for Gamma Radiography

American National Standard N432;

Radiological Safety for the Design and Construction of Apparatus for Gamma Radiography

American National Standards Institute
Subcommittee N43-3.5

Under the sponsorship of the
National Bureau of Standards
Washington, DC 20234

Approved August 15, 1980
American National Standards Institute
New York, NY 10018

ANSI N432-1980

U.S. DEPARTMENT OF COMMERCE, Philip M. Klutznick, Secretary

Jordan J. Baruch, Assistant Secretary for Productivity, Technology and Innovation

ANSI N432

Definitions

Gamma Radiography System

All components necessary to make radiographic exposures, including the exposure device, source assembly, control, & other components associated with positioning the source such as source guide tubes, exposure head, & collimators, if used

ANSI N432

Classifications

Class P — **Portable Exposure Device**

Designed to be carried by one person

Class M — **Mobile Exposure Device**

Designed to be moved by a suitable means provided for the purpose, but not portable

Class F — **Fixed Exposure Device**

Designed to be installed in a fixed location or with mobility restricted to a particular working area

P M F

ANSI N432

5.1 General Requirements

5.1.1 Design Considerations: For conditions during use.

a. Durable and corrosion resistant

b. Minimize entry of water, sand, mud.

c. Ease of safe cleaning

d. Effects of temperature

e. Effects of radiation on materials

f. Appropriate mounting accessories

g. Security of fasteners

ANSI N432

5.1.2 Locks

5.1.2.1 Not easily removable by unauthorized personnel.

5.1.2.2 Cannot remove source assembly or move shielding when locked.

5.1.2.3 Cannot unlock with easily available substitute for key.

5.1.2.4 Cannot operate lock unless source assembly fully shielded.

5.1.2.5 Cannot remove source assembly through back of unlocked device.

ANSI N432

6. Design and Construction of Controls

6.1 General Requirements

6.1.1 Cannot remove if source not in stored position OR removing control causes source assembly to return to stored position.

6.1.2 Expose / retract direction clearly marked.

6.1.3 Drive cable “stop” to prevent cable disengagement AND drive cable travel distance indicator (if so equipped) can be zeroed.

6.1.4 Control must be connected for source to be exposed.

ANSI N432

8.1 Shielding Efficiency Test

8.1.1 Demonstrate that locked device at maximum capacity meets required radiation levels.

8.1.2 Remove accessories, lock source in stored position and install plugs and caps.

Examine (survey) entire surface to determine that maximum radiation levels meet requirements.

Measure exposure rate at 50 mm, and average the reading over 10 cm^2, with no linear dimension greater than 5 cm.

Measure exposure rate at 1 mm, and average the reading over 100 cm^2, with no linear dimension greater than 20 cm.

ANSI N432

Table 8.1 Maximum Exposure Rate

Class	At surface		50 mm from surface	1 m from surface
P	200 mR/h (14.3 nA/kg)	or	50 mR/h (3.6 nA/kg)	2 mR/h (0.1 nA/kg)
M	200 mR/h (14.3 nA/kg)	or	100 mR/h (7.2 nA/kg)	5 mR/h (0.4 nA/kg)
F	200 mR/h (14.3 nA/kg)	or	100 mR/h (7.2 nA/kg)	10 mR/h (0.7 nA/kg)

ANSI N432

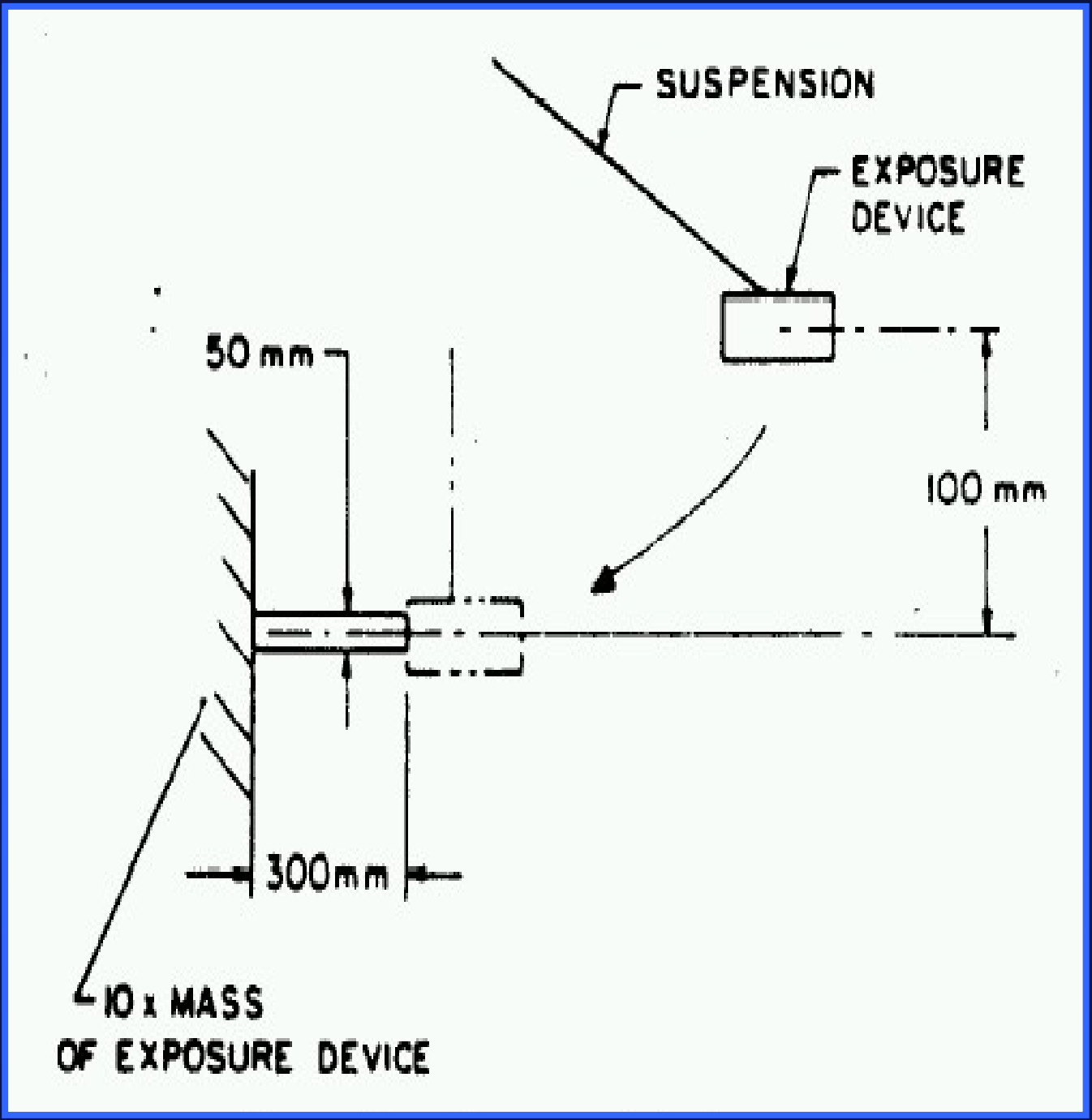

Fig. 8.1 Horizontal Shock Test

ANSI N432

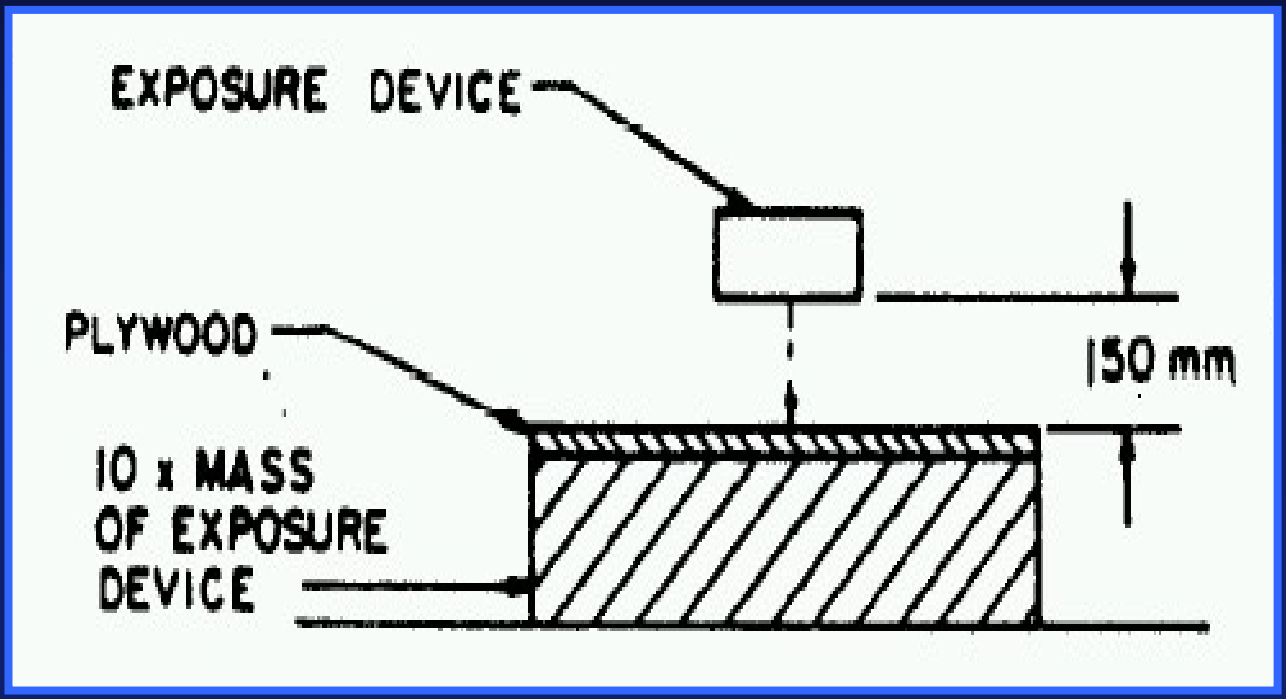

Fig. 8.2 Vertical Shock Test (Class P)

ANSI N432

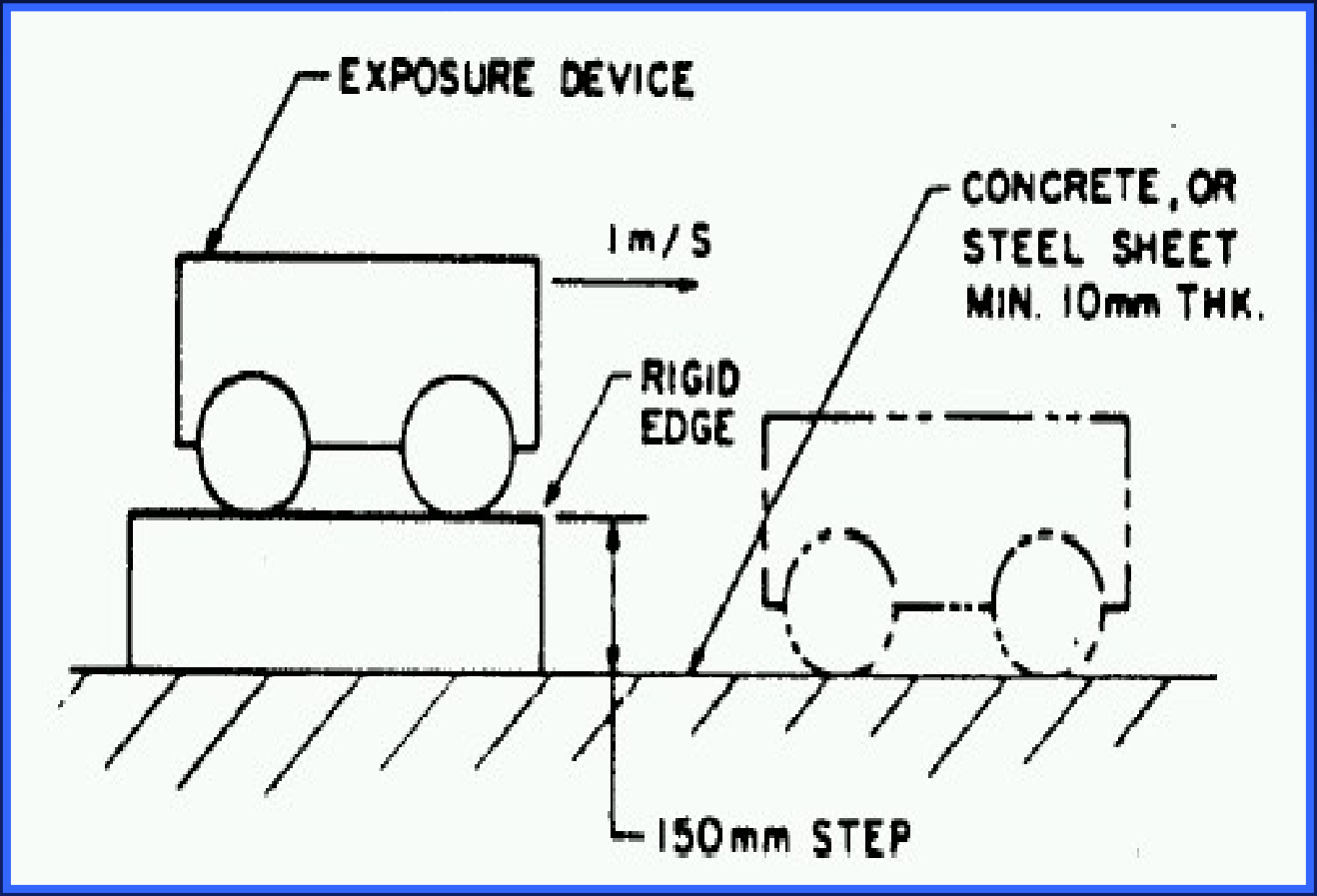

Fig. 8.3 Vertical Shock Test (Class M)

ANSI N432

Accidental Drop Tests

Drop 1

Allow the exposure device to free-fall from 9 m onto a steel plate in such an attitude as to suffer the maximum damage

Drop 2

Allow the exposure device to free-fall from 1 m onto a 150 mm diameter steel pin in such an attitude as to suffer the maximum damage

Drop 3

Drop the exposure device 500 m from a helicopter onto a a 150 mm diameter steel pin

(Just kidding!)

ANSI N432

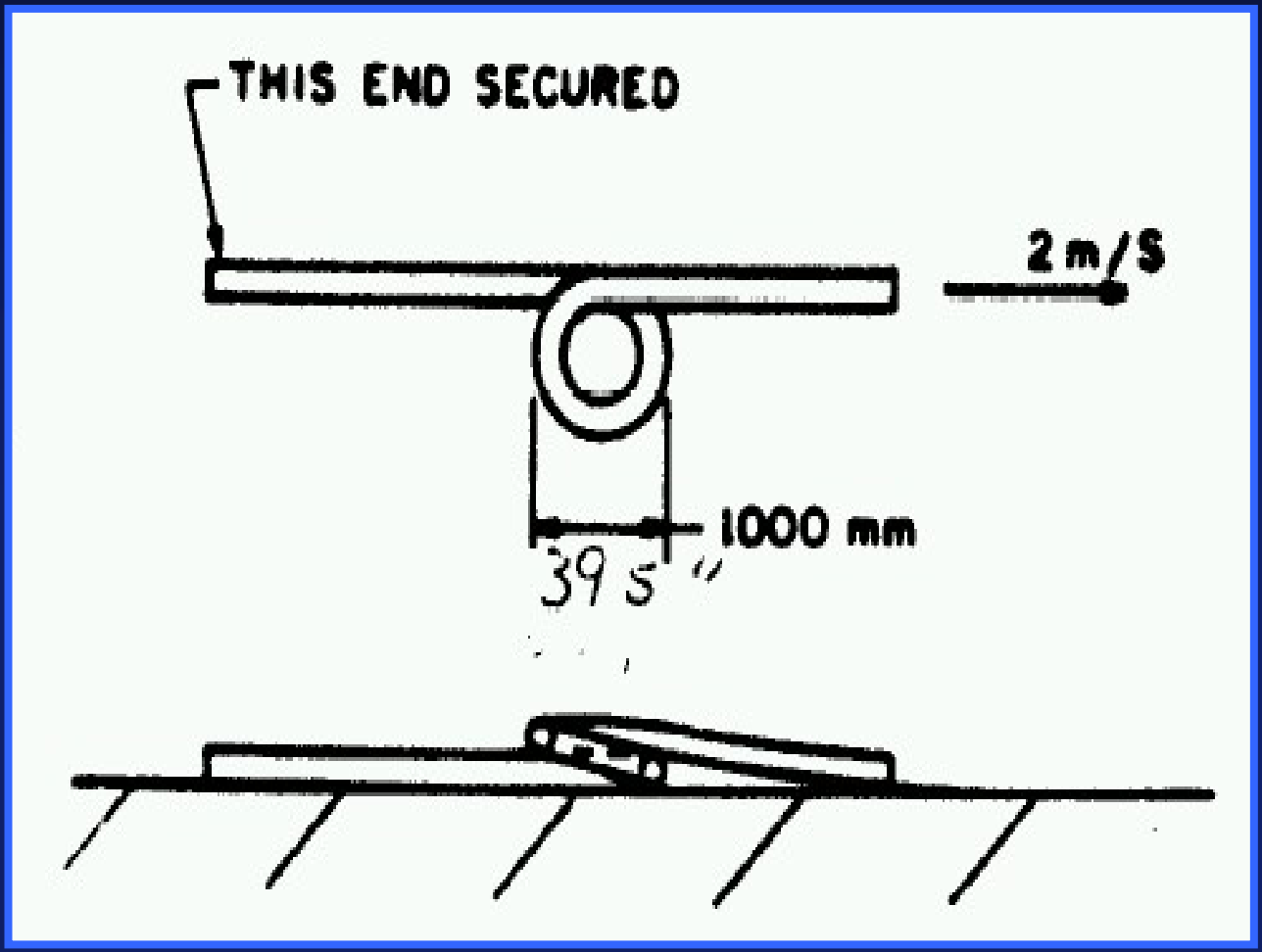

Fig. 8.4 Kinking Test

ANSI N432

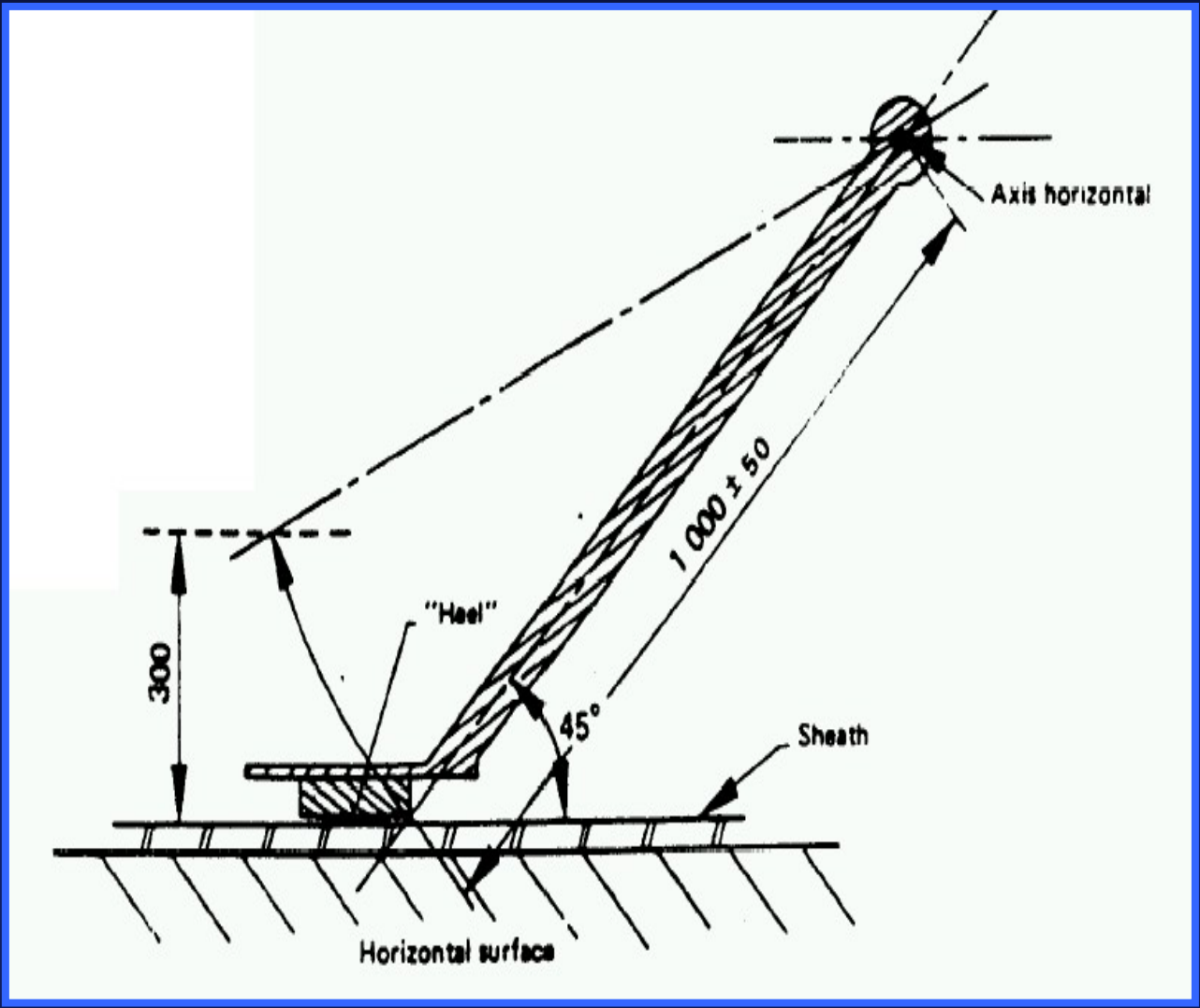

Fig. 8.5 Crushing Test

ANSI N432

Tensile Test for Controls

Attach remote control to exposure device; To the final position of the remote control apply a tensile load of 500 N for 30 sec; repeat 10 times

Lock the crank arm & apply a force of 1000 N for 10 sec to the end portion of the control cable which links with the source assembly; repeat 10 times

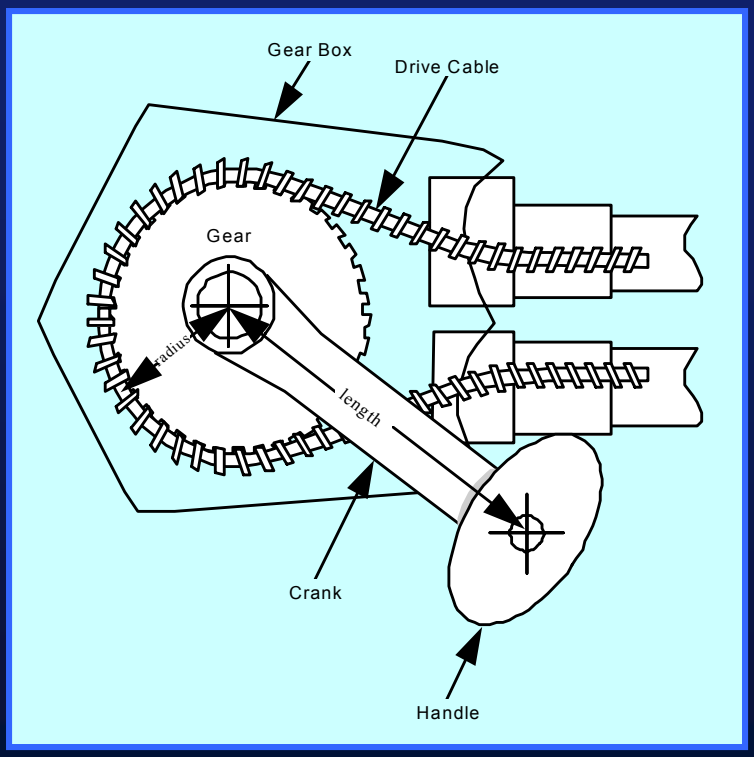

ANSI N432

Tensile Test for Source Assemblies

Apply a tensile load of 890 N for 30 sec to each of the following attachments:

- Sealed source to source assembly
- Stop ball to source assembly
- Source assembly connector to source assembly

Connect the drive cable to the source assembly; secure source capsule & apply a tensile load of 890 N to the drive cable for 30 sec

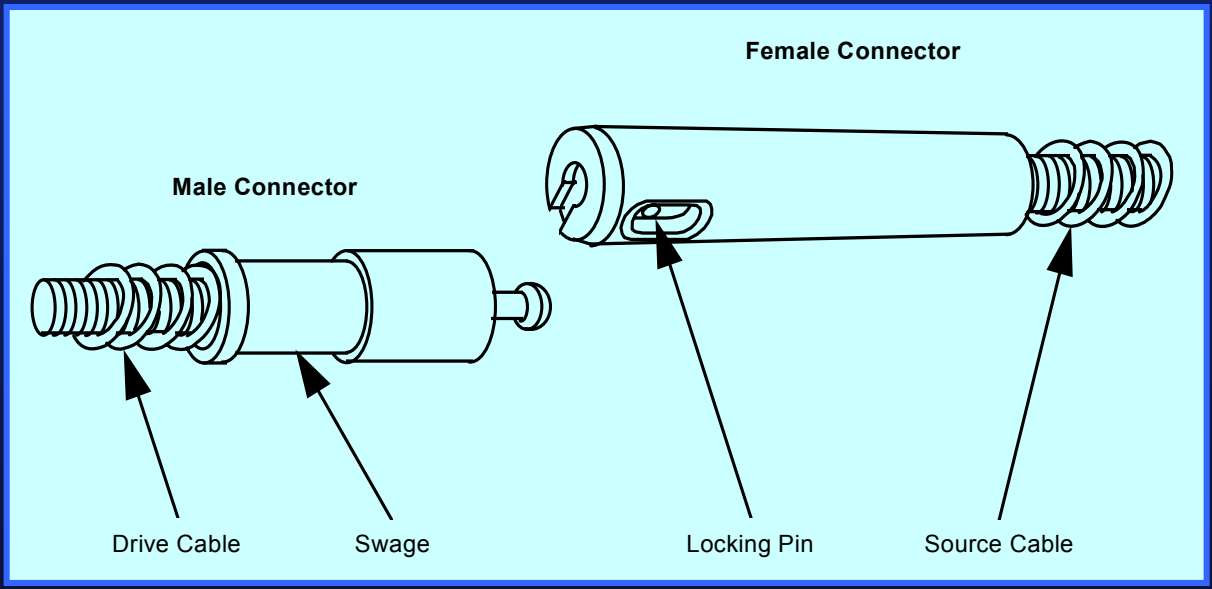

ANSI N432

Endurance Test

Requires demonstration that the gamma radiography system will remain operational after 20,000 cycles

A device shall be used for automatically actuating the apparatus… by rotating any manually operated crankshaft at a speed of 1 r/s minimum... by exerting a torque of 500L N-m

ANSI N432

Appendix A – Product Assurance

(This appendix is not a part of N432.)

A1. General

A Product Assurance program is essential in both the design and manufacture of radioisotope exposure devices. Each manufacturer of such devices should develop a Quality program appropriate to the complexity and quantity of devices being designed and manufactured. A recommended basic program follows.

QA

ANSI N43.9-1991

American National Standard

for Gamma Radiography – Specifications for Design and Testing of Apparatus

ANSI American National Standards Institute
11 West 42nd Street
New York, New York
10036

ANSI N43.9

Subcommittee N43-3.5 on Apparatus for Gamma Radiography

Members who participated in developing the standard:

John J. Munro III, Chair
R. D. Dicharry
Ron Falcon
Tom M. Gaines
Leo Gourgon
Anthony La Mastra
Donald O. Nellis
A. R. Patterson
Cathleen M. Roughan
Ron Wascom
Clifford J. Williams
Mary Wood

ANSI N43.9

Endurance Test

If no overload clutch is built into the apparatus for gamma radiography, the automatic testing device shall exert a torque of 500 x L B-m where L is the length of the lever or crank arm in meters (112 x L lb-ft where L is the length of the lever or crank arm in feet) at the extreme positions

ANSI
American National Standards Institute

ANSI N43.9

Revision Objectives

- Add QA requirements
- Delete or reduce unnecessary requirements
- Resolve issues related to qualifications for associated equipment & definition of "radiography system"
- Use clear, objective terms that will allow the standard to be incorporated into regulation & are enforceable

ANSI

Questions?