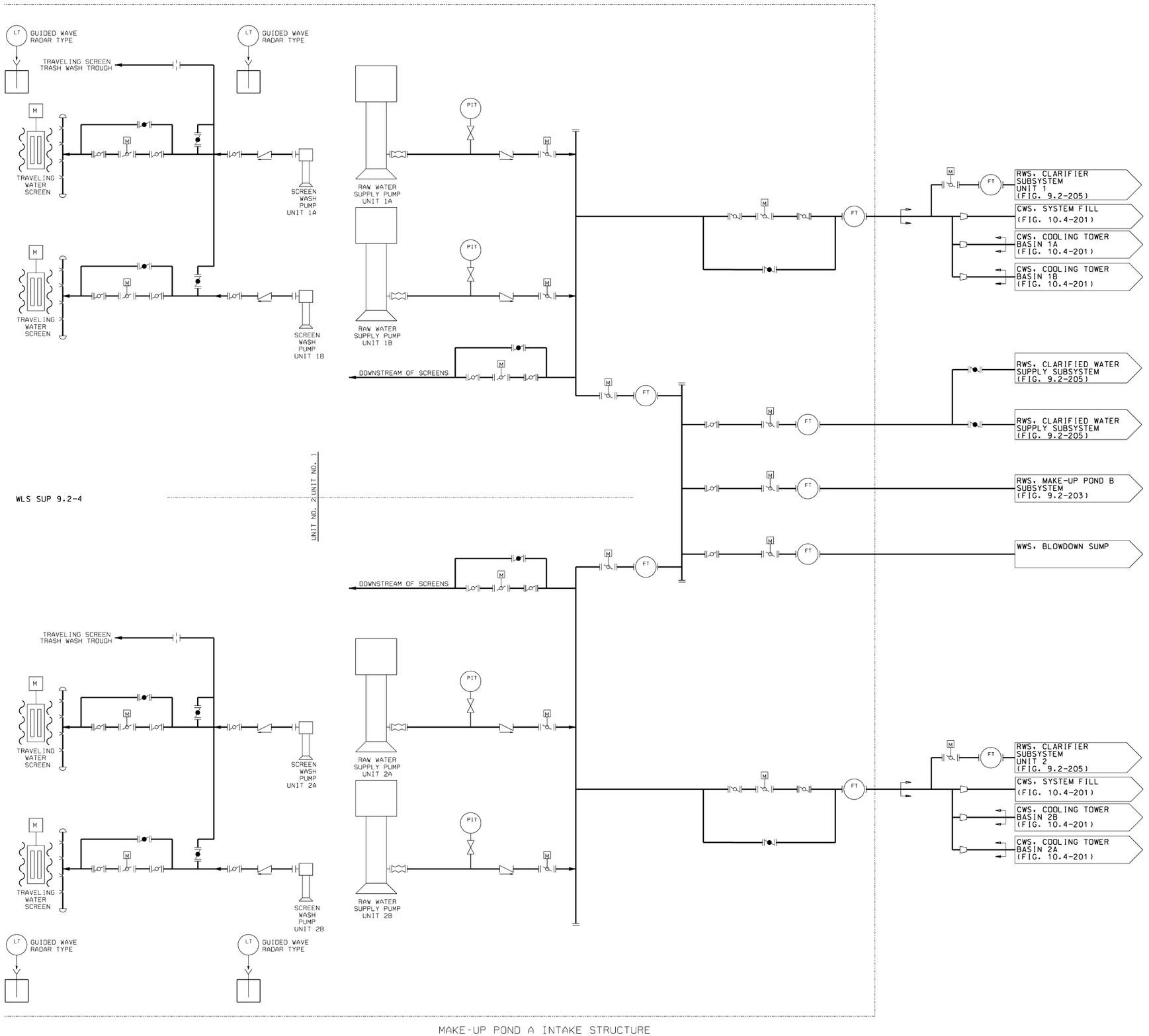

MAKE-UP POND A INTAKE STRUCTURE

NOTES:

1. ALL MOTOR OPERATED VALVES SHALL HAVE MANUAL OPERATION HANDWHEELS.

WILLIAM STATES LEE III NUCLEAR STATION UNITS 1 & 2

Raw Water System,
Raw Water Supply Subsystem

FIGURE 9.2-202 Rev 5