Official Transcript of Proceedings

NUCLEAR REGULATORY COMMISSION

Title: Advisory Committee on Reactor Safeguards
594th Meeting - Open Session

Docket Number: (n/a)

Location: Rockville, Maryland

Date: Thursday, May 10, 2012

Work Order No.: NRC-1610 Pages 1-338

NEAL R. GROSS AND CO., INC.
Court Reporters and Transcribers
1323 Rhode Island Avenue, N.W.
Washington, D.C. 20005
(202) 234-4433

UNITED STATES OF AMERICA

NUCLEAR REGULATORY COMMISSION

+ + + + +

594TH MEETING

ADVISORY COMMITTEE ON REACTOR SAFEGUARDS

(ACRS)

OPEN SESSION

+ + + + +

THURSDAY

MAY 10, 2012

+ + + + +

ROCKVILLE, MARYLAND

+ + + + +

The Advisory Committee met at the Nuclear Regulatory Commission, Two White Flint North, Room T2B3, 11545 Rockville Pike, at 8:30 a.m., J. Sam Armijo, Chairman, presiding.

COMMITTEE MEMBERS PRESENT:

J. SAM ARMIJO, Chairman

JOHN W. STETKAR, Vice Chairman

HAROLD B. RAY, Member-at-Large

SAID ABDEL-KHALIK, Member

SANJOY BANERJEE, Member

DENNIS C. BLEY, Member

CHARLES H. BROWN, JR. Member

MICHAEL L. CORRADINI, Member

DANA A. POWERS, Member

JOY REMPE, Member

MICHAEL T. RYAN, Member

STEPHEN P. SCHULTZ, Member

WILLIAM J. SHACK, Member

JOHN D. SIEBER, Member

GORDON R. SKILLMAN, Member

NRC STAFF PRESENT:

KATHY WEAVER, Designated Federal Official

DOUG BROADDUS, NRR/DORL

PAUL CLIFFORD, NRR/DSS*

ED FULLER, RES

JENNIFER GALL, NRR

TINA GHOSH, RES

KATHY GIBSON, RES/DSA

ANNE-MARIE GRADY, NRO

ALLEN G. HOWE, NRR/DORL

DAVID JAFFE, NRO

SHANLAI LU, NRO/DSRA

SAMUEL MIRANDA, NRR

TRACY J. ORF, NRR/DORL

MATTHEW PANICKER, NRR

BEN PARKS, NRR

ERIC REICHELT, NRO/DE
JASON SCHAPEROW, RES
JOHN SEGALA, NRO
DAVID TERAO, NRO/DE
GETACHEW TESFAYE, NRO
ANTHONY ULSES, NRR
WEIDONG WANG, ACRS Staff

ALSO PRESENT:
RICH ANDERSON, FPL
BERT DUNN, AREVA
STEVE FLUIT, B&W
DARRELL GARDNER, AREVA
RUDY GIL, FPL
STEVE HALE, FPL
JACK HOFFMAN, FPL
TODD HORTON, FPL
JAY KABADI, FPL
PRABHAT KRISHNASWAMI, Engineering Mechanics Corporation (Emc2)
BRIAN McINTYRE, AREVA
NITINKUMAR PANDYA, AREVA
SHIH-HSIUNG SHANN, AREVA
TIM STACK, AREVA
PAVAN THALLAPRAGADA, AREVA

SEBASTIEN THOMAS, UniStar/EDF

CHRIS WASIK, FPL

KEITH WICHMAN, Engineering Mechanics Corporation (Emc2)

DENNIS WILLIFORD, AREVA

*Participating via teleconference

T A B L E O F C O N T E N T S

Page

Opening Remarks and Objectives 6

US EPR DC Application FSAR 7

Chapter 3, 9, 14, 19

(Closed Session)

US EPR DC SER with Open Items 54

for Chapter 3, 9, 14, 19

State of the Art Reactor Consequence

Analyis 159

St. Lucie Unit 1 Extended Power Uprate

Application 229

P R O C E E D I N G S

8:30 a.m.

CHAIRMAN ARMIJO: Good morning. This meeting will now come to order. This is the first day of the 594th Meeting of the Advisory Committee on Reactor Safeguards. During today's meeting, the Committee will consider the following: US EPR spent fuel cask transfer facility; selected chapters of the Safety Evaluation Report with open items associated with the US EPR Design Certification Application; state-of-the-art reactor consequence analysis project; and St. Lucie One Extended Power Uprate application.

The meeting is being conducted in accordance with the provisions of the Federal Advisory Committee Act. Ms. Kathy Weaver is the Designated Federal Official for the initial portion of the meeting.

We have received no written comments or requests for time to make oral statements from members of the public regarding today's sessions. There will be a phone bridge line. To preclude interruptions of the meeting, the phone will be placed in a listen-in mode during the presentations and Committee discussions.

A transcript of portions of the meeting is

being kept and it is requested that the speakers use one of the microphones, identify themselves and speak with sufficient clarity and volume so that they can be readily heard.

We'll open the meeting with the first topic and that is the US EPR Spent Fuel Cask Transfer Facility and I'll turn that over to Dr. Dana Powers.

MEMBER POWERS: Thank you, Mr. Chairman. Mr. Chairman, as you and the members are aware we're going through the design certification for the EPR. That, of course, is looking at a paper reactor. We get lots of drawings. Seldom do we get a chance to look at actual hardware.

In our last subcommittee meeting, we got a chance to see pictures of hardware and things that actually work and whatnot. And it was so delighted. I said we've got to share this with the full Committee.

And so today we're going to begin our discussions on looking at some actual hardware connected with the spent fuel cask transfer facility for the device. Some of this material is proprietary. And so do we want to close the meeting right now or do we want to do it in a separated section?

MR. GARDNER: Dr. Powers, I would propose

that we get through the initial part which is nonproprietary. But as we get into it we're pleased to have an EDF representative here. They consider that material proprietary, operating experience, and they've got some other pictures that I think would be beneficial to the members.

MEMBER POWERS: Okay. So, at some point, you will just tell us when we need to close it and then we will close that portion of the meeting.

CHAIRMAN ARMIJO: Yes.

MEMBER POWERS: At any reason, this is an information part of the briefing for our benefit and education and whatnot. After the break, we'll move into the EPR more formalized presentation.

At this point, unless any of the Members of the Subcommittee have additional comments to make, I would propose we turn it over to Darrell Gardner and let us see some real honest-to-God hardware.

MR. GARDNER: Very well. Well, thank you. Once again as always we're certainly pleased to present before the Committee. This morning this is a technical presentation from AREVA. I have myself, Pavan Thallapragada and Nitin Pandya will be presenting information about the undercask spent fuel transfer facility. We are also pleased to have a

representative from UniStar/EDF, Sebastien Thomas, that can share with us some operating experience that they've had in Europe.

With that, I'll turn it over to Pavan.

MR. THALLAPRAGADA: Good morning. My name is Pavan Thallapragada. I've been with AREVA for about 11 years. I'm a manager of Nuclear Island Systems Engineering. I've been involved with the design activities of the undercask transfer facility for the past couple of years.

On my left is Nitin Pandya.

MR. PANDYA: I'm Nitin Pandya. I work with AREVA since last five years from 2007 as a advisory engineering in component engineering department. I have a bachelors in mechanical engineering from India University.

And I started working for nuclear power projects for design and construction back in 1988 working with India and Indian government nuclear power program. Then I have worked with the Indian government nuclear power program, with Atomic Energy of Canada Ltd. And then I moved to AREVA in 2007. And since them I'm working as an advisory engineer.

MEMBER POWERS: Very good.

MR. THALLAPRAGADA: We are ready to start

our presentation. Go ahead.

The first, the second slide, is the overview of the US EPR fuel host storage and handling system. It is very similar to the current operating PWR plants reactor building/fuel building, fuel transfer facility between the reactor building and the fuel building and the underwater storage cracks that is similar to the plants.

Slide three, this is again an overview of the system. It's very similar to current operating plants. On the left hand side is the fuel building. You will notice that the fuel pool and the cask loading pool are separated from the main fuel storage pool with two gates, a slot gate and a swivel gate. The new fuel storage is on the top left-hand side corner. On the right-hand side is the reactor building and its associated pools.

MEMBER SKILLMAN: Let's go back to slide two please just for a second. The fuel transfer facility, the horizontal blue lines.

MR. THALLAPRAGADA: Yes.

MEMBER SKILLMAN: Show I think the upenders and the transfer rails. And my question is are those operated with pulleys and hoists or are those operated with hydraulics?

MR. PANDYA: This fuel transfer facility is being operated by a conveyer mechanism. It is not like pulleys which is being used in many of the nuclear plants in the U.S. This is sort of a conveyer system. So transfer has a conveyor mechanism inside it and the fuel assembly will be placed on that conveyor. And then it will be transported from one end to other.

MEMBER SKILLMAN: And what moves it through the --

MR. PANDYA: There is a motor, motor and the rope. The motors are on the wall of the pit and that will drive this conveyor mechanism. So it's sort of like a pulley hanging on the top and that rope goes in and then like this.

MEMBER SKILLMAN: So it's a mechanical conveyor with a pulley and a steel rope.

MR. PANDYA: Right.

MEMBER SKILLMAN: Okay. Thank you.

MR. PANDYA: I would like to confirm that again after this meeting. Just give me a minute.

MEMBER SKILLMAN: Yes. My real question is whether or not it's mechanical. That is with the motor, pulleys and stainless steel cable or --

MR. PANDYA: Yes, it is mechanical. It is

not hydraulic.

MEMBER SKILLMAN: It's not hydraulic. Okay. That's all I needed. Thank you.

MR. PANDYA: Okay.

MR. THALLAPRAGADA: Next slide please. This is the under pit of spent fuel cask transfer facility, a schematic of a drawing of how the facility looks like. This is what is unique of what we are trying to present today. This is the first kind in the U.S. It comes from the design -- The basic design comes from plants in France. Sixteen plants or so have this system operating there and we would like to describe which design features in the later slides.

Next slide please. This is a fuel building layout in the middle of the spent fuel pool. On the left-hand side is the cask loading pit. And on the bottom left-hand corner of the cask loading pit is the penetration through which the fuel is actually transferred from the storage racks into the cask.

This is a section view of the fuel building. The dark blue structure on the left-hand side bottom corner is the spent fuel cask transfer machine. In the middle roughly is the spent fuel pool with the fuel storage racks indicated and the green rectangles are intended to indicate the fuel

assemblies themselves.

The spent fuel cask transfer facility itself mainly consists of three major components. I'm on slide seven. I'm sorry. The spent fuel cask transfer machine, the cask loading pit penetration assembly and the fluid and pneumatic systems associated with the facility.

Major operations of the facility are conducted at four stations: the lifting station which is really outside the fuel building and there are three stations within the fuel building, namely, handling station, biological lid handling station and the penetration station.

Slide eight. The spent fuel cask transfer machine is a trolley essentially which moves on rails. The main purpose is to carry the casks in a vertical position from the lifting station through the three work stations and the loading. And the safety-related function is part of the fluid boundary structural support when the cask is loaded with the penetration assembly.

On slide nine, there are a couple of pictures on the left-hand side. It is a picture of the cask transfer machine. I can send out some CAD exploded drawings. By ten, the penetration assembly

is an opening in the cask loading pit that allows for cask loading.

It does this majorly at the upper cover which is on the bottom of the cask loading pit, the penetration itself and its assembly and the lower cover at the lower end of the penetration. The main purpose is to provide a leak-tight connection between the cask loading pit and the internal cavity of the cask.

And this is on slide 11 a CAD model of the penetration assembly.

CHAIRMAN ARMIJO: Now is that a unique new design or is that something that's pretty much evolutionary, that penetration assembly?

MR. THALLAPRAGADA: It is pretty much of evolutionary, the design as it exists in the French plants, about 16 plants or so. It's unique to the U.S., but not unique -- Right.

MEMBER CORRADINI: Maybe it's going to be -- Oh, I see. It's going to be later. I'm still trying to figure out the protocol on how this is going to work. That you're going to tell us later.

MR. THALLAPRAGADA: Yes.

MEMBER CORRADINI: Okay.

MR. THALLAPRAGADA: Yes, we have a slide

on the operations.

MEMBER CORRADINI: Okay. Thank you.

MR. THALLAPRAGADA: Slide 12, this is how -- It's a rendering of how the cask end up with the penetration assembly looks like.

MEMBER ABDEL-KHALIK: So from a seismic loading standpoint, would the bellows represent the sort of most vulnerable point as far as leakage?

MR. THALLAPRAGADA: Yes, that would be because -- Yes, that would be.

MEMBER ABDEL-KHALIK: And sort of can they be redesigned for site-specific seismic hazard conditions?

MR. THALLAPRAGADA: I would guess so. Yes. I mean I would --

MR. GARDNER: Let me follow up on this. I'm not sure I understand your question. It's part of the design certification that there's going to be a standard design seismic specter to all components that are part of a standard design. So to answer your question if a specific site had a seismic profile that was different from the standard design profile, meaning it exceeded it in some areas, then of course you could qualify the component to that different profile. Otherwise, they would be qualified to the

same standard profile.

MR. PANDYA: I would like to add something on your initial question about the vulnerability of the bellow. As far as this design is concerned, there is no really any vulnerable component because this cask transfer machine is anchored to the building wall. So vulnerability --

MEMBER ABDEL-KHALIK: That's not the point. I'm concerned about leakage and a path that would allow the entire pool to be drained.

MR. PANDYA: But the load is not transferred to the bellow. The load is transferred to the side wall and the floor.

MEMBER ABDEL-KHALIK: Well, there is a hard connection between the bellows and the structure.

MR. PANDYA: No, there is no hard connection. The bellow is just hanging and pulled back.

MEMBER ABDEL-KHALIK: Okay. I guess without the details it's kind of hard to tell.

MR. PANDYA: Yes.

MEMBER ABDEL-KHALIK: Okay.

MR. PANDYA: Sorry about that.

CHAIRMAN ARMIJO: Is that a single bellows or is that kind of a double bellows?

MR. PANDYA: Yes, it is a two-wall bellows.

CHAIRMAN ARMIJO: A two-wall bellows.

MR. PANDYA: Dual-wall bellows. But, yes, we can have that picture of the general layout parameters and you can explain that first so that it will be more clear.

MR. THALLAPRAGADA: Okay.

MEMBER BLEY: We'd like to see that, but could you go back to slide 6? Should you get a leak in that bellows, should the plant get a leak in it, it looks like you can drain down to reasonably close to the spent fuel unless there's a barrier there. Can you explain that? Or would it come down right to what looks like a couple feet above the spent fuel?

MR. GARDNER: We have a slide coming on that if you would allow us to --

MEMBER BLEY: That will show the whole pool arrangement? Okay.

MR. GARDNER: And discuss the draindown.

MEMBER BLEY: Super. I'll wait. Thank you. What's been the history with these seals? Have you had any leaks in France with this kind of seal arrangement?

MR. GARDNER: That's the discussion that

we had that EDF would like to close.

MEMBER STETKAR: That's why he's here.

MEMBER BLEY: Good enough. I'll just lean back and wait. Thank you.

MR. GARDNER: That's why he's here.

MEMBER POWERS: They're way ahead of you, Dennis. They've got this thing covered.

MR. THALLAPRAGADA: We can talk a little bit about the operation of this.

MR. PANDYA: That would be nice.

MR. THALLAPRAGADA: Just go back a one more, two more, slides. That's good.

This is the machine when it's at the lifting station. This is where essentially the cask comes from a horizontal position on the trailer where it's made vertical and placed on the transfer machine. Next slide please.

MEMBER CORRADINI: So this is how it goes in and goes out. So is the plan or the experience such that you start horizontal, lift it, put it on, fill it, lift it, put it back horizontal and ship it offsite?

MR. THOMAS: That is correct.

MEMBER CORRADINI: Okay. And does it store then horizontally where you currently have it?

MR. THALLAPRAGADA: In France?

MEMBER CORRADINI: Yes.

MR. THOMAS: We don't store them. We send to La Hague for reprocessing.

MEMBER CORRADINI: Yes, but there is some queue that builds. So when the queue builds is it sitting there horizontal or is it vertical? When it's sitting in the hog waiting to be processed is it horizontally stored or vertically stored?

MR. THOMAS: When it's on the train or --

MEMBER CORRADINI: When it's back at La Hague ready to be processed.

MR. GARDNER: When you take it to La Hague, I think that you empty the canister and put them in the pools there at La Hague.

MEMBER CORRADINI: Oh. All right. I didn't appreciate that.

MR. THOMAS: Yes.

MEMBER CORRADINI: So you don't store it in the cask. The cask is only for transport, not for storage at La Hague. Okay. Thank you very much.

MEMBER ABDEL-KHALIK: So when does the cask draining evacuation and helium filling take place?

MR. THALLAPRAGADA: One more slide we will

deliver that report. This slide is essentially to show that the machine is load from directly out of the fuel building. This is the main slide which talks a little bit more about the operations.

The cask comes through the loading hall door. Do you want to show the loading hall door? Just show it on the picture. The cask essentially -- Yes, that's the loading hall door. It comes from the loading hall and the first station is the handling opening station. That's where the cask essentially is filled. It connected to the electrical and hydraulic sectors in the loading hall. That's the first station.

And it moves from the handling opening station to the biological lid handling station. And the biological lid handling station the biological lid is raised up using the device up there. And it's placed on the cask transformation outside.

From the second station, it goes to the third station which is the penetration station where the lower coat of the penetration will have been opened up, placed on the left-hand side of the machine. And docketing mechanism goes up, grabs the penetration assembly and brings it down a few inches, 10 inches or so. And it's lowered. Essentially the

cask is docked with a penetration assembly.

MEMBER STETKAR: Pavan.

MR. THALLAPRAGADA: Yes, sir.

MEMBER STETKAR: Recommendation. Slow down because about ten of these people in this room have never seen this before. And you need to kind of walk through this process a little bit more slowly because it's something they've never seen before. So if you back to the loading hall door and stop in each of the handling sessions and explain a little bit more what's done there I think it might help some of the other members. We're okay for time.

MR. GARDNER: Yes, and I just want to add a comment, too, for the Members' benefit. We've shown the trolley in only two locations. It's actually stopping as it moves. Okay. We couldn't really show it on this print.

MEMBER SKILLMAN: How many fuel assemblies are in the cask fleet?

MR. THALLAPRAGADA: It depends on the cask design. The casks as designed can hold multiple fuel assemblies. There are designs out there which have in Europe 12 assemblies and some which have 32 assemblies.

MEMBER SKILLMAN: Well, for the design

certification how many fuel assemblies should the Committee consider are in that cask with new fuel? How many new fuel assemblies would you communicate would be brought into the facility with this system?

MR. GARDNER: It would just be spent fuel leaving.

MEMBER SKILLMAN: Okay. Thank you.

MR. PANDYA: You're welcome.

MR. GARDNER: Yes. I was just going to answer your question. In the design certification, a specific canister design is not part of the standard design because that's going to be a purchase component and to be certified under different part of rules, Part 52. However, the staff has requested that we'd be able to demonstrate at least one assembly can be removed from the facility.

CHAIRMAN ARMIJO: I give you that --

MR. GARDNER: It would be an assembly canister for the purposes of sizing parts if you will.

CHAIRMAN ARMIJO: But this penetration assembly, that's part of the certified design.

MR. GARDNER: Yes.

CHAIRMAN ARMIJO: That's kind of a standard thing.

MR. GARDNER: Yes, sir.

CHAIRMAN ARMIJO: Okay.

MEMBER CORRADINI: I want to make sure I -- I have a bunch of little questions. So the big question is that if you wanted to you could fill it with 13.

MEMBER SKILLMAN: That's what I think they just said.

MR. PANDYA: Twelve assemblies.

MR. GARDNER: It's based around that kind of a design. But the canister designed could make something that would fit this that may hold 14.

MEMBER CORRADINI: That's fine. But a baker's dozen. Okay.

MR. PANDYA: And your question is very valid, but it is not part of our design certification. When later on, we would like to use a MOX fuel assembly, at that time this facility can be used. But it is out of way.

MEMBER CORRADINI: Okay.

MR. PANDYA: It's been part of our discussions.

MEMBER CORRADINI: So just one clarification. Let's just use your example. I hadn't thought of that example, but that's a good one with AREVA and such. So if you went MOX you would have to

then do some sort of certification of the change of what's in it which would change the potential numbers. And that would be up to whoever is customizing the base certified canister.

MR. PANDYA: That's correct. But that's not part of our design. Just for knowledge to share.

MEMBER ABDEL-KHALIK: So it is up to the cask vendor to make sure that their cask would interface with your machine.

MR. GARDNER: Yes.

MR. PANDYA: That's absolutely right.

MR. GARDNER: There are requirements in the design certification that will be imposed on that to ensure that the cask that's provided meets those requirements to interface with the structure.

MEMBER ABDEL-KHALIK: And that interface requires some physical geometry requirements to match your sort of leak assembly.

MR. GARDNER: Correct.

MR. PANDYA: That's right.

MEMBER ABDEL-KHALIK: Is that an unreasonable sort of demand on current cask vendors? Are you excluding people out of the market?

MR. GARDNER: They're doing this in Europe with cask vendors. So it's just a matter of designing

the cask to operate with it. I guess to answer your question is there a current canister in the U.S. license to work with the answer is no because this facility --

MEMBER ABDEL-KHALIK: That's the heart of my question.

MR. GARDNER: No one is. All vendors are on the same footing in the U.S. market.

MR. THALLAPRAGADA: I'll go once more on this.

MEMBER STETKAR: I'm sorry. Only in probably the biological lid handling station where you explain where the lid is taken off and where it's -- I think would help a couple of people.

MR. THALLAPRAGADA: The cask transfer machine when it comes under the biological lid station. The biological lid lifting device essentially the yellow structure in the figure comes down and that's what we're trying to show with those two -- It comes down. It turns around and essentially locks the lid on top of the cask, the biological lid.

And the cask transfer machine moves from biological lid handling station to under the penetration station. When it is under the penetration station the lid handling device essentially lines up

with the receptacle back from the lift handling lid.

At that point, the handling station device comes down, presses the lid on the machine -- and goes back. So that's essentially how the biological lid is handled.

CHAIRMAN ARMIJO: You have x, y and z motions to get everything lined up just right to get everything to fit or.

MR. PANDYA: Yes. X and Y motions.

CHAIRMAN ARMIJO: And Z and then something comes down.

MR. PANDYA: Z motion is already taken care of when you align the cask on the machine outside the fuel building. So at that point Z motion is taken care of. When it is properly fully aligned, we have a very good system. There are locations X, Y in that direction. Then only the cask will go by the machine to the loading hall. So they will not go up and down.

MEMBER REMPE: Where is the helium penetration put in?

MEMBER CORRADINI: If I could just broaden her question. So going in that's in the cask. It's empty full of just essentially air or it already has an inert gas. You lift it up under the biological lid thing. You open it up, shift it under six. You fill

it. It's filled with water. Then where do you get rid of the water?

MEMBER REMPE: Do you put helium in?

MR. THALLAPRAGADA: Yes, after loading. Right you're asking about --

MR. PANDYA: Yes, before loading the cask is filled with demineralized water.

MEMBER REMPE: Okay.

MR. PANDYA: And then it will be loaded to the biological lid station and then the cover will be lifted. Then I go to the previous slide to the number six position and full assembly will dropped. Everything is done. Again, the DM water will be drained and gas will be prepared before the shipment.

MEMBER REMPE: And so after six is where you put helium in.

MR. PANDYA: Yes, that's the -- After six, yes. After six it will start going back in reverse.

MR. THALLAPRAGADA: The motion is reversed. It comes to the loading hall to the handling opening station and then the cask is empty. You put in -- You fill up the cask. You move onto the cask --

MEMBER BROWN: That's where you put the water in.

MR. PANDYA: Yes. At handling.

MR. GARDNER: At the handling station, handling opening station.

MR. THALLAPRAGADA: And the process reverses back. Again at the handling opening station you drain the water and fill it up and take it out of the loading hall.

MEMBER REMPE: Okay. Thank you.

MEMBER BROWN: I'm totally lost. I watched this in the Subcommittee meeting and I thought I understood it. And I'm back to square one now. Where is the handling opening -- When it first comes in, it has a lid on it and it's empty. There's nothing in it. It's bare.

So you move it to the handling opening station. Then you take the lid off. How do you get water into it if you don't take the lid off?

MR. PANDYA: Actually, this cask has a penetration connector with it.

MEMBER BROWN: You fill it with water with the lid on.

MR. PANDYA: Yes. That's correct.

MEMBER BROWN: With the biological lid on.

MR. PANDYA: Yes. Actually, the cask has two lids. We are talking about two lids. One is a

biological lid and another is a cask cover lid which is coming on the top of the cask which has nothing to do with the shielding and that kind of stuff. So in handling opening, we will take out the top cover of the cask. There is a biological lid still on the cask.

MEMBER BROWN: Got it.

MR. PANDYA: But the cask has penetration at its peak, and through those penetration piping it will be filled with water, demineralized water. And then those penetration will be sealed and then the cask will move to second station, biological lid lifting station.

MEMBER BROWN: But you don't put the cover back on yet.

MR. THALLAPRAGADA: No, no.

MEMBER BROWN: Okay.

MR. THALLAPRAGADA: And that will be the last thing when --

MEMBER BROWN: All right. I got that now.

MR. THALLAPRAGADA: Okay.

MEMBER RYAN: So during this back and forth and I guess over time is the potential for contamination on the track of this machine in that whole floor. What's your contamination control and

countermeasures plan? How are you going to maintain that as a fairly, well-controlled radiological environment?

MR. THALLAPRAGADA: The contamination -- When it's under the penetration station, there are radiological shields.

MEMBER RYAN: I'm not talking about external gamma radiation. I'm talking about contaminated water.

MR. GARDNER: Leakage.

MEMBER RYAN: Leakage.

MR. THALLAPRAGADA: Yes, we may have it.

MEMBER RYAN: Will have it.

MR. THALLAPRAGADA: The loading hall is closed during these operations.

MEMBER RYAN: Right.

MR. THALLAPRAGADA: And that is the loading hall is leak tight. So there is no transfer of air or any contamination outside the building.

MEMBER RYAN: I'm thinking more about contaminated water, not contaminated air. These casks in use over time don't stay clean. They have contamination. Right?

MR. PANDYA: Yes. Absolutely right.

MEMBER RYAN: Okay. So you're going to be

using the casks over and over again and it will have a buildup of contamination. Correct? And there's just no way that this space is not going to have contamination control questions that raise up over time. I'm just trying to understand how you can trust that.

MR. PANDYA: Actually this cask is being prepared outside of the fuel building and it will undergo the contamination check also. So we will receive a fresh cask.

MEMBER RYAN: That's not my question. I understand you're going to mark. I want to know about what you're going to do about contamination should it arise. How are you going to handle it when it arises?

MR. PANDYA: Yes, that's correct. First of all, we have to send the cask to the decontamination facility of the plant where it will get decontaminated. And then the internal surface is fine. And we started the process of coming into the loading hall. And during the process if something got leaked through these connections, then it will definitely be in the loading hall and we have to deal with it as you are dealing with any other contaminated process water handling system.

MEMBER RYAN: That's a very general

answer.

MR. GARDNER: We may not have the right people here today.

MEMBER RYAN: Okay.

MR. GARDNER: We'll try to get you a specific answer for that.

MEMBER SCHULTZ: Perhaps information related to that decontamination process would be helpful.

MR. THALLAPRAGADA: Yes.

MEMBER ABDEL-KHALIK: While loading is in progress, the cask is full of demineralized water. Is that correct?

MR. THALLAPRAGADA: Yes.

MEMBER ABDEL-KHALIK: But does that impose any constraints on your criticality assessments?

MR. PANDYA: Actually, the cask vendor, cask designer, will qualify the cask based on the number of fuel assemblies and they will decide through required spacing. And all if it is filled with the DM water, all those will be taken into cask and design. So casks will be qualifies for that kind of conditions.

CHAIRMAN ARMIJO: It's not borated.

MR. PANDYA: When we start the process,

this penetration, this particular space, will be filled with the borated water. But only the cask filling, which is done at the handling opening, that will be with the DM water. And then when it is hooked up over here, then there will be some mingling with the DM water and boric acid water, borated water.

MEMBER ABDEL-KHALIK: But you have to do the analysis for --

MR. PANDYA: Yes.

MEMBER SKILLMAN: When you described that the cask may be provided by different vendors, what I'm now envisioning is a cask within a structural cylinder and the structural cylinder is locked into the building by the pinions and trunnions that you indicate on the far right-hand corner.

To what extent is the variation in the cask design a risk factor for seismic movement? If that cask I'm going to suggest 120 inches in diameter, three and a half meters, if one cask vendor is three and a half meters plus or minus a centimeter to what extent is that difference in the cask geometry a risk factor for the bellow seal?

MR. THALLAPRAGADA: There are pinions on the transfer machine which essentially lock the cask to the machine. There are two on the bottom and two

on the top. So were the tolerances of the casks a little bit off, it would still be locked to the machine.

MEMBER SKILLMAN: How does the cask lock if it's within a structural cylinder independent from the cask?

MR. GARDNER: I think I understand what you're saying. If they had to overpack, the cask vendor is going to have build it, that's going to be a requirement. It would be a rigid --

MR. PANDYA: I would like to throw some light in to answer that to what Darrell has mentioned and I also would like to throw some more light that this particular facility will be designed for not only one cask. It will be designed for whatever number of casks we decide. Like Europe has designed this facility for two casks and two different casks can be handled by this facility.

This facility has trunnions coming with this facility. So those trunnions can come closer, away, up and down, that kind of stuff. But as far as this cask top surface is concerned, this surface and the distance between the bellow, that should remain the same for whatever cask we use.

MR. GARDNER: So it wouldn't be an

acceptable cask if it didn't meet that specification.

MR. THALLAPRAGADA: Yes.

MEMBER SKILLMAN: Thank you. I would like to go back to the question I asked earlier. In the Subcommittee I asked about new fuel and for some reason what I took away from the Subcommittee meeting was that all fuel enters the plant through this cask and all fuel exits the plant through this cask.

What I learned this morning is the new fuel has a different path into the plant. Would you explain that please?

MR. THALLAPRAGADA: This facility is only for removing fuel from the plant.

MEMBER SKILLMAN: Only spent fuel.

MR. THALLAPRAGADA: This spent fuel cask transfer machine the whole structure is. Now new fuel comes through the loading hall and again I'm not an expert at this. I'm just trying to remember what I know. It comes through the loading hall and it goes up by the handling opening station. The crane comes down, pulls the new fuel up, and takes it to the new fuel storage area.

MEMBER SKILLMAN: Okay. I stand corrected. I must have misinterpreted what I heard a couple weeks ago.

MR. THALLAPRAGADA: Sorry about that. The loading hall is used. I think that's where the confusion is.

MEMBER SKILLMAN: And this is a 241 fuel assembly core, correct?

MR. THALLAPRAGADA: Yes.

MEMBER SKILLMAN: Okay. Thank you.

MR. THALLAPRAGADA: If there are no questions, we'll go to the next slide, slide 16 please. Here we talk about the design features to prevent draindown. The machine, the loading hall, it's a very tightly packed loading hall if you will. There's not much space. And we have one to show in the closed portion.

But for it to move, for things to move along, it's very closely tight with tight tolerances. There are anti-seismic devices, guide rails and brakes.

MEMBER SHACK: When you say tight tolerances, what do you mean?

MR. THALLAPRAGADA: Tolerances is the wrong phrase. The gap between the machine and the loading hall essentially. It's not like me sitting in this hall.

MEMBER SHACK: But what is the gap? Can

you give me a measurement?

CHAIRMAN ARMIJO: A human being sneaking between.

MR. PANDYA: We can provide it, but not at this time.

MR. THALLAPRAGADA: Yes.

MR. PANDYA: We can provide the number if you want more detail.

MEMBER SHACK: I mean, is it centimeters or millimeters?

MR. GARDNER: I think we have a picture to show you. You can see it.

MEMBER SHACK: Okay.

CHAIRMAN ARMIJO: It's tight.

MR. GARDNER: It's very small.

MR. THALLAPRAGADA: There are seismic devices, guide rails and brakes that would prevent essentially this machine from moving too much. All the fuel boundary components and support elements are all Seismic Category 1 design.

The valves and piping are Seismic Category 1 Quality Group C. There are double barriers, there are two sets of seals. The bellows are double walls. There is an upper and lower penetration cover. Both of them are leak tight. And the spent fuel pool

itself is isolated by two sets of gates.

MEMBER ABDEL-KHALIK: Is human access possible under any circumstances when this machine is inside the loading hall?

MR. THALLAPRAGADA: Yes. And I would say yes because all of these have a manual override, if you will, the brakes or whatnot. If one were to -- If there was a case when one want to go and enter inside the hall and have a position to manually override the brakes and what not, one could do it.

MEMBER ABDEL-KHALIK: So if the gap is -- I don't know what the gap is, centimeters or -- How do people get in there?

MR. THALLAPRAGADA: The gap at the closest location is in centimeters, not really wide.

MR. GARDNER: But maybe we're not totally understanding your question. The gap -

MEMBER ABDEL-KHALIK: I mean, if this were an emergency, you say you have human override, manual override. People have to get in the loading hall.

MR. THALLAPRAGADA: This is a picture of it.

MEMBER ABDEL-KHALIK: Oh, I see.

MR. THALLAPRAGADA: So at the top here you are seeing that's where the guide rails are.

MR. PANDYA: This EDF picture will be very useful.

MR. THALLAPRAGADA: There the gap -- But humans can walk around here and do whatever is necessary.

MEMBER ABDEL-KHALIK: Okay.

MR. PANDYA: I would like to add that this facility is remotely operated. However, the operator is allowed at any point of time to carry out any emergency actions if it is required because of some malfunction. And because of that this facility has enough radiation shielding provided around the penetration so that the horizontal plate, which is for radiation shielding will become closed and we close the gap. And the space between the upper surface, also matching surface of the cask and the ceiling is so tight that the chances of radiation streaming are reduced and the particular radiation requirement in the loading hall will be maintained as per the regulation.

Those kind of shielding arrangements you can see on the EDF picture later on. It can give a better idea how close that facility is, and is there any possibility of radiation streaming, that kind of stuff.

MEMBER BLEY: When you say per the regulation, do you mean for continuous manning for people being there?

MR. PANDYA: No, not for continuous manning. But the radiation will be certified if an operator has to enter into the loading hall for a short period of time and what all the doses he or she will get. That will be within limit.

MEMBER BLEY: Okay.

MR. PANDYA: And we have those numbers also in our radiation chapter.

MEMBER RYAN: Is there a specific criteria so many millisieverts per hour for so much time of entry or something like that that we can hear?

MR. PANDYA: Yes, we have those numbers.

MEMBER RYAN: Or general concepts about radiation protection. Some numerical values would be very helpful to understand.

MR. GARDNER: They're in Chapter 11. I don't know that we have those this minute.

MEMBER RYAN: Okay.

MR. GARDNER: But in Chapter 11. But in normal operation this would be a low radiation. But obviously --

MEMBER RYAN: One person's low is another

one's medium and another one's high.

MR. GARDNER: Those numbers are defined in Chapter 11.

MEMBER RYAN: Okay. I'll look it up. Thank you.

MR. THALLAPRAGADA: Next slide please. The detection features, there's leakage monitoring between the double leakage barriers, between the seams, between the inner and outer walls of the bellows. There are level sensors in the pool compartments, in the spent fuel pool, in cask loading pit. And there are indicators in the main control room of the valves themselves.

CHAIRMAN ARMIJO: So to make sure I understand. If you have leakage from let's say the interior bellows, do you have leak detection in the gap the interior bellow and the exterior bellow?

MR. PANDYA: Yes.

CHAIRMAN ARMIJO: Okay. So you would know.

MR. PANDYA: Yes.

CHAIRMAN ARMIJO: These are big bellows.

MR. PANDYA: Yes. Around six feet diameter.

CHAIRMAN ARMIJO: And how much -- Well,

you obviously have operating experience. Have you had -- Well, I guess I'm asking the same question Dennis did. I had some unfortunate experience with bellows. That was long ago, but -- Okay. I'll wait.

MR. THALLAPRAGADA: We looked at a few beyond design basis scenarios. Such we looked the limiting conditions. We looked at walls. When you have double seal failures, both seams failing all the way through, essentially just disintegrating. And there's a leakage and water leaking out.

The scenario of what seals are assumed to fail, the cask loading pit gates are open to the spent fuel pool and there is -- We have makeup water, 400 gallons per minute. The leak rate is 390 gallons per minute. So we could make it up.

The scenarios we had we would see at that point mitigation would be as we close the swivel gate and we've done some calculations. It can be done within 30 minutes very easily. Or the other option would be to close the upper cover penetration assembly depending upon there is assembly in the cask loading pit. We put it back into the fuel pool and close the upper cover.

And both these scenarios essentially in 30 minutes time we can calculated that the spent fuel

pool particularly is about one foot or so. And the loading hall has floor drains which kind of also solves some of the questions you had last time which can rid the water to our retention pit at the bottom of the fuel building. So all that water -- Maybe that answers kind of your question, too -- is contained in the retention pit.

MEMBER SKILLMAN: What is the basis of the 390 gallons per minute please?

MR. THALLAPRAGADA: We perform the calculation assuming the entire seal 360 degrees is lost.

MR. GARDNER: Looking at the gap. The gap all the way around and this is open. How much water could you get through it?

MR. THALLAPRAGADA: That is double seals.

MR. GARDNER: Double seal all around.

MR. THALLAPRAGADA: Both seals.

MEMBER SKILLMAN: And is that the maximum gap that can be assumed?

MR. PANDYA: Yes, that's correct. Basically, when there is no seal, the surface will be open like this. And we have water head pressure. So how much water will seep out of that gap? And that was a maximum gap because on this gap there's a seal. So

we each covers that gap. So now there is no seals.

MEMBER SKILLMAN: So it's the maximum hydrostatic head on that greatest area.

MR. PANDYA: Yes.

MEMBER SKILLMAN: So it's Q equals AV and the head is the -- Thank you.

MEMBER STETKAR: Just for clarity for the Committee would you go back to slide 12 please. And could you point to the seal that you actually did that analysis for on this slide?

MR. THALLAPRAGADA: The big one.

MEMBER STETKAR: Thank you.

MR. THALLAPRAGADA: Is that the one?

MEMBER STETKAR: It's actually not that -- It's actually at the top.

MR. THALLAPRAGADA: The top of the cask loading.

MEMBER STETKAR: It's not the bellows. It's the little O-ring seals that you see up there. That's the gap. Is that correct?

MEMBER BROWN: Do you mean on the cover?

MEMBER STETKAR: Yes.

MEMBER BLEY: Right below the cover. Well, there are two different --

MEMBER STETKAR: Not below the cover.

It's between the yellow and the purple thing I believe.

MEMBER BLEY: Oh, that one.

MEMBER STETKAR: I mean, they're the same. But just for clarity in terms of the leakage area that they used for that calculation.

MEMBER ABDEL-KHALIK: So the gap is only a few mils. Is that right?

MEMBER STETKAR: Yes.

MR. GARDNER: The assumption here is that you are in the fuel handling operation. But otherwise it would just be draining water. It's just a big mess. But you're in fuel handling. Everything is locked in place. The covers are open. So everything -- The bellows are lowered. You're connected. That's the scenario because that's the position you would be in or otherwise you wouldn't be moving any fuel. There would be no event here other than water.

MEMBER ABDEL-KHALIK: And there is some kind of O-ring seal.

MR. GARDNER: Yes.

MEMBER ABDEL-KHALIK: And that's what's assumed to fail and it's only going to be -- Even though it's six feet in diameter the height is how high?

MEMBER BROWN: Where's your little pointer? Which O-ring is it?

MEMBER ABDEL-KHALIK: Less than that. A millimeter.

MR. THALLAPRAGADA: Yes, it's in millimeters. I can't recall the actual number. Yes, that's the --

MEMBER ABDEL-KHALIK: That's why you get only 390 GPM leakage rate.

MR. THALLAPRAGADA: Yes.

MEMBER ABDEL-KHALIK: So the possibility of a bellows failure has not been considered at all.

MR. GARDNER: We don't consider that a credible scenario since it's seismically designed and there's two of them. As we said before, the design precludes it with double seals, double bellows, double gates.

MEMBER BLEY: Is there some kind of monitoring between the two bellows?

MR. THALLAPRAGADA: Yes. There's a leak detection. Can we go to that slide?

MR. GARDNER: Fifteen maybe? Seventeen.

MR. THALLAPRAGADA: Seventeen. That is one thing within the two walls of the bellows.

MR. GARDNER: And the stuff that's where

you start the handling operation.

MR. THALLAPRAGADA: And here on slide 19 we have a slide on the operating history of this facility.

MEMBER BLEY: We're already done with his presentation at this point.

MR. GARDNER: Yes.

MEMBER BLEY: I think he's got this covered.

MEMBER ABDEL-KHALIK: And the process is such that during the cask loading operation there is only one assembly in that subpart of the pool right above the cask. Is that right?

MR. THALLAPRAGADA: That's correct.

MEMBER ABDEL-KHALIK: And that assembly is always held by a crane during the entire process.

MR. THALLAPRAGADA: That is correct.

MEMBER ABDEL-KHALIK: So if you have this postulated accident and that part of the pool starts draining --

MR. THALLAPRAGADA: Yes.

MEMBER ABDEL-KHALIK: -- would any part of the assembly be uncovered?

MR. GARDNER: That was the scenario we discussed on page 18. If you flip back, we talked

about what we would do. You would move it back into the pool.

MR. THALLAPRAGADA: The idea is -- Yes, if we have -- If a leakage is detected, you move the assembly back into the pool -- a fuel rack if need be or into the cask.

MEMBER ABDEL-KHALIK: How long before that one spent fuel assembly that's in that part of the pool begins to uncover? How much time does the operator have before they have to move the thing back to the pool?

MR. THALLAPRAGADA: What we calculated is within 30 minutes we could do any of these operations we talked about putting it back. And in 30 minutes you lose about one foot of water. So this assembly will be covered well with water the whole time.

MEMBER ABDEL-KHALIK: Okay. Thank you.

MR. THALLAPRAGADA: So I think at this point --

CHAIRMAN ARMIJO: Before you go do that, when you're not loading a cask how is this cover and equipment below the pool -- You know, when everything got out of the way and you're closed up, how do you make sure you don't just have a leak when you're not loading fuel? Now what's -- The cover, I just see the

cover. But I don't see what makes a seal, a second seal, when the cask isn't there.

MR. THALLAPRAGADA: The cover. There's a top. Pink rectangle top says that's the upper cover. It has seals. It covers. That's the design.

CHAIRMAN ARMIJO: Right. I see the O-rings and things like that.

MR. THALLAPRAGADA: All right. And when there is not a cask docked to this facility there is a bottom cover, a similar bottom cover, at the bottom where essentially we have postulated the leak. There's a cover there which is again designed to hold the entire head even if the upper cover were to fail.

CHAIRMAN ARMIJO: But if that happened would all the load on the bellows supporting the water?

MR. THALLAPRAGADA: No, the bellows at any point are not --

CHAIRMAN ARMIJO: Not carrying load.

MR. THALLAPRAGADA: -- carrying load.

CHAIRMAN ARMIJO: Okay. Thank you.

MR. GARDNER: You may see in this picture.

MEMBER BLEY: Until you said that, I was almost with you.

MR. PANDYA: When the bellows are not

used, then the bellow will be compressed back to that upper level with the spindles. These spindles will take it back to the upper level. So there is no load in the bellow. And then there will be a bottom cover placed over here. So we will be having a top cover at this point and then there will be a bottom cover at this point.

CHAIRMAN ARMIJO: And that's put in with your machine.

MR. PANDYA: Yes, that's right. Absolutely yes.

MEMBER BLEY: There's one place I'm still having a little trouble seeing and it's either between your figure nine or 14 I think. You talked about how the cask was anchored. And I can see how it's anchored to those heavy I-beams that are part of the trolley arrangement. How is -- Especially along the axis of the tracks, how is it anchored so as to preclude any motion?

MR. THALLAPRAGADA: On the right-hand side of the figure, you see number two. The two indicates there are anti-seismic devices. There are essentially pins that go into the loading hall. There are holes in the loading hall where these pins would go at every loading station when it's under the handling station

or biological station.

MR. GARDNER: It would anchor itself.

MR. THALLAPRAGADA: It would anchor itself, yes.

MEMBER BLEY: Now in the picture I see them perpendicular to the axis of the track.

MR. THALLAPRAGADA: Yes.

MEMBER BLEY: Along the axis of the track is there another similar pinning arrangement somehow?

MR. THALLAPRAGADA: No. There are brakes on the wheels.

MEMBER BLEY: What kind of brakes that are on the wheels?

MR. PANDYA: We have electric brakes on the motor and we have pneumatic brakes. So we have two kinds.

MEMBER BLEY: There is no physical block you put down that's anchored to the floor.

MR. PANDYA: No.

MEMBER BLEY: What keeps the motor brakes -- What if you don't have power and you're getting --

MR. PANDYA: The brakes are designed in such a way that if the power is off the brakes will be engaged.

MEMBER BLEY: Okay.

MR. PANDYA: So the brakes can be open only when we have power. If the power goes off --

MEMBER BLEY: And the brakes -- How have you qualified the brakes for seismic?

MR. PANDYA: The brakes are --

MEMBER BLEY: The braking power, sharing that whole mass those brakes under seismic excitation.

MR. THALLAPRAGADA: No, the pins are, they --

MEMBER BLEY: They prevent motion this way. But the tracks are going this way.

MR. THALLAPRAGADA: Both ways.

MEMBER BLEY: Oh, both ways. That's what I asked.

MR. THALLAPRAGADA: They are both ways.

MEMBER BLEY: There are pins going the other way, too.

MR. THALLAPRAGADA: There are pins.

MEMBER BLEY: So they are taking care of me this way. Now they're taking care of me forward and they're qualified for that.

MR. THALLAPRAGADA: Yes.

MEMBER BLEY: That braking motion that would tend to break those pins. They're qualified.

CHAIRMAN ARMIJO: We're kind of running a

little short on time.

MEMBER BLEY: Go ahead.

CHAIRMAN ARMIJO: I think it's important to get to the closed session to see what the real --

MEMBER BLEY: Okay. Sorry.

MEMBER POWERS: Yes, we'll have closed at this point.

CHAIRMAN ARMIJO: I don't know if I have bring the hammer --

MEMBER POWERS: We're now in closed, Kathy.

MS. WEAVER: Yes. If we have any members of the public or visitors here today, you don't have clearance or need to know, I need to ask you to step outside during this period of the meeting.

CHAIRMAN ARMIJO: And the bridge line, Kathy.

MS. WEAVER: Theron, can you cut down the bridge line please?

CHAIRMAN ARMIJO: Off the record.

(Whereupon, the above-entitled matter went off the record at 9:29 a.m.)

CHAIRMAN ARMIJO: We're back in open session and the next topic will also be chaired by Dr. Powers.

MEMBER POWERS: Thank you, Mr. Chairman. We are back to the certification of the EPR design. And again what we're doing here is looking at the SER with open items and judging whether we can pass that on to page five of the process.

Before we get involved in our discussions here I think, John, you had some comments you wanted to make with respect to the discussion we had earlier on the spent fuel handling system.

MR. SEGALA: Yes. Hi, this is John Segala, the Chief of the Licensing Branch and NRO. I have the EPR Design Center.

I just wanted to say that the staff has been reviewing this cask loading design over the last several years. We have visited the Cattenom plant in France. We went there and looked at the facility.

We have also through international cooperation with other regulators met with the French regulator, the UK, and have talked about their review issues from a regulator perspective and have shared our issues. And the staff has gone through this design and has asked many of the similar questions that both the Subcommittee and the Full Committee asked. And we're also interfacing with the COL applicant s looking at further down the road of how

all this is going to fit together.

I just wanted to provide that quick overview since we didn't have a full presentation on this topic.

MEMBER POWERS: Thank you, John.

As is our custom, what we are actually examining is the SER, but we will have presentations by both the Applicant and the Staff on the subject. To begin our discussions, I would like to ask Getachew Tesfaye to give us some opening comments.

MR. TESFAYE: Thank you, Dr. Powers. Good morning. My name is Getachew Tesfaye. I'm the NRC EPR Design Certification Project Manager.

As I customarily do, for the record I would like to give you a summary of our ACRS activities to date. Staff has completed its presentation of the first three review of the design certification application. That is a safety violation for those open items to ACR EPR Subcommittee.

A chapter-by-chapter presentation of the safety violation report of those open items began on November 3, 2009 and concluded on February 23, 2012. On April 8, 2010, we briefed the ACRS Full Committee on the seven chapters that were completed through March 2010. These are chapters 2, 4, 5, 8, 12 and 17.

On April 21, 2010, we received a letter from the ACRS Full Committee Chairman on these seven chapters. The letter stated ACRS has not identified any issues that merited further discussion. On May 27, 2010, the Staff submitted its reply to ACRS.

And on March 8 of this year we briefed the ACRS Full Committee on chapter 6, 7, 11, 13, 15, 16 and 18. On March 15, 2012, we received a letter from ACRS Full Committee Chair on these seven chapters. The March 15 letter included for additional issues that the Committee recommended the Staff should address as part of the open item resolution.

On April 24, 2012, the Staff submitted its reply to ACRS's March 15 letter describing how it plans to address the four additional ACRS issues.

Today we will brief the Full Committee on the remaining four chapters. Those are chapters 3, 9, 14 and 19. And thank you very much.

MEMBER POWERS: Thank you. At this point, first, do members have any questions on that summary? Mr. Brown?

MEMBER BROWN: You say you submitted a letter response on the chapters 6, 7, etc. comments that we had in the letter.

MR. TESFAYE: That's correct. Yes.

MEMBER BROWN: I didn't see it.

MEMBER POWERS: You will get to see that for the June meeting.

MEMBER BROWN: June Full Committee?

MEMBER POWERS: Yes.

MEMBER BROWN: Since I'll be out of town for three weeks up until then that's going to make it pretty tight for resolution.

MEMBER SIEBER: That was the plan.

MEMBER POWERS: It's a pretty simple resolution.

MEMBER BROWN: If we all agree, then the answer is straightforward. I just wanted to say I hadn't seen anything. I wanted to make sure that my email address had not been lost.

MEMBER POWERS: We keep trying, but unfortunately it pops up all the time.

(Laughter.)

Once you get things out on the internet you just never get rid of them diligently though we have tried.

At this point, I would like to turn the discussions over to Mr. Gardner who will make the Applicant's presentation concerning the four chapters and the discussion.

MR. GARDNER: Thank you, Dr. Powers. Mr.

Chairman. This presentation today as Getachew mentioned would conclude our phase III presentations for the chapters. So we certainly are very excited to have reached this milestone.

MEMBER POWERS: Let's be careful here and say you hope that it will.

MR. GARDNER: Certainly we trust that it will. Today we have Tim Stack as our principal presenter. He will be supported with Matt Miller and Brian McIntyre and myself. And I don't really have any other opening remarks. I think we covered those earlier and I'll just turn it over to Tim to get started.

MR. STACK: Thanks, Darrell. Again as Darrell indicated, I'm Tim Stack from AREVA. And I'll be giving the presentation today.

Move on to slide two, as far as the outline for this, we're going to do the same outline as we've done in the previous Full ACRS Committee meetings.

We'll give an overview of the design. In principle, this overview is the exact same one we saw in March of this year. It's also basically the same thing we saw in April of 2010. So we'll kind of try to go through that a little more quickly.

Obviously, if you'll have questions on specific items, you'll stop me I'm sure. But we'll go through that at a fairly fast pace. And then we'll go through the specific chapters and some highlights on the specific four chapters for 3, 9, 14 and 19.

One other item that we will cover as a part of this is during the Full ACRS Committee meeting for Calvert Cliffs, there were at least two questions that were asked that were being redirected back to AREVA. We'll cover those as we go through our presentation today.

One was related to looking at whether we were designed for mixed core. The other was related to treatment of the EDS and what is accredited for and why is it there. So we'll cover that as we go through this today. One was reverse flow on a three pump operation. And on the reverse flow on the three pump operation we've received those questions and we will be answering those separately from this.

MR. GARDNER: Thank you.

MR. STACK: Okay. So when you look at the EPR design objectives again this is a large evolutionary plant. It's built on years of operating experience. The main goal was improved economics and improved safety. Those are both critical to our

customers, relative to the economics.

We were aiming at a reduction in power generation costs of ten percent as well as a design for a 60 year design life and for safety. You can see them listed in some of the main points, increased margins, increased redundancy, reduction in core damage frequency as well as severe accident design features.

When you look at the major features in the plant, it's good to look at them in the context of how are we doing them right now and how is the EPR different. In some cases it's very similar. In some cases it's quite different.

From the nuclear realm, again it's a proven four loop design, typical of many operating plants in the U.S. and abroad. Four train safety systems. Most of the operating plants have two trains. A double containment. Most of the operating plants have a single containment.

An in-containment refueling water storage tank. Typically in the operating plants you're going to see outside containment, RWSTs or BWSTs. The main advantage of that is eliminating the operator action to swap over to sump.

Severe accident mitigation design features

versus not having them included in the operating fleet. Separate safety buildings versus having a consolidated nuclear aux building.

An advanced control room design. A digital control room and control systems versus an analog set of control systems.

From the electrical side, looking at a full load rejection for shedding house load versus a partial load rejection on the operating fleet. Four EDGs versus typically two EDGs. As well as two smaller diverse SBO diesel generators versus typically one that we would see on the operating fleet.

And from the same characteristic standpoint, designing the plant for airplane crash protection from the start and explosion pressure waves. Again, we see this as fully reflecting the operating experience in the 21st century from the U.S. as well as from Europe.

MEMBER SIEBER: Your reactor coolant pumps are standard pumps with seals as opposed to canned motor pumps.

MR. STACK: Yes, sir.

MEMBER SIEBER: How long will the seals last in the blackout condition?

MR. STACK: We have -- The seals are

basically a standard type of seal where you look at a mechanical seal that has three stages. And then there is a stand steel seal behind it. The stand steel seal and package has been qualified for the SBO duration for the EPR. That's eight hours.

MEMBER SIEBER: Okay. That's without cooling.

MR. STACK: Yes, sir.

MEMBER SIEBER: Okay.

MR. STACK: That's no seal injection, no thermal barrier cooling.

MEMBER SIEBER: Now your double containment is actually a single containment that's a steel liner with concrete shell and the space between it.

MR. STACK: Yes.

MEMBER SIEBER: And the shell's purpose is to provide radiation protection, whereas the liner is the pressure containment. Is that correct?

MR. STACK: As far as the -- let me jump down for a moment if I may. When you look at these and again on the -- I'll point to it sooner or later or not. All right. The brown we're looking at the containment. We have a steel liner here. Here's the pressure vessel for containment. And we talk about

having a second containment. We're looking at our shield structure here. The annulus is a filtered vented annulus.

MEMBER SIEBER: Right.

MR. STACK: So the containment itself looks an awful lot for example like Bellafont.

MEMBER SIEBER: Or Davis-Besse.

MR. STACK: Well, the difference from Davis-Besse is in Davis-Besse you'll have just a steel containment without --

MEMBER SIEBER: Without the concrete, right.

MR. STACK: -- without the concrete.

MEMBER SIEBER: Got it.

MEMBER SHACK: And this is a steel liner. It's not a steel containment.

MR. STACK: Yes, Davis-Besse is just the steel containment.

MEMBER SIEBER: That was --

MEMBER SHACK: A free-standing.

MR. STACK: Free-standing steel containment.

MEMBER SIEBER: Right. You're right.

MR. STACK: As well as some of the ice condensers that are free-standing containment with a

standoff missile shield.

MEMBER SIEBER: Watts Bar.

MEMBER CORRADINI: The two Westinghouses are also steel, Point Beach and Kewaunee.

MR. STACK: I'm not sure. So we'll slide back to slide number five again for a moment. And again when you look at the general arrangement of the NSSS it's a very conventional four loop design, again multiple years of operating experience. One of the key changes thought is that we've increased volumes in the primary and the secondary to slow down the operator response, the overall response time.

In general, when you're looking at this plant for design basis accidents, we're taking no credit for operator action before 30 minutes from inside the control room, no credit for operator action outside the control room for the design basis accidents for an hour. So we're really pushing back from some of the operating action times you see on the operating fleet.

Again as far as the arrangement is concerned, you have reactor vessel in the center, four U-tube steam generators, four reactor coolant pumps, again with mechanical seals and one pressurizer.

Next up we show again our N+2 concept, the

US EPR. I'll get you oriented here again. What we have is the reactor building in the center. Down on the bottom here, we have the fuel building. Then we have safeguards one, two, three and four.

And when we look at the N+2 concept what we have we'll assume we have a single failure in train one. We'll assume train two had preventive maintenance going on. We'll assume that we have a postulated accident that affects the train three safeguards.

So, for example, I have an injection line break in the ECCS system. And then the accident mitigating feature would be provided with the four train.

In this arrangement, you have to energize two trains. In this case, it would be trains three and four. And because you don't know which -- You do not know. The injection lines aren't cross-connected for this purpose. You don't know which loop has the accident or has the initiating event in it.

So we would energize two diesels. And that would be the general accident mitigating arrangement for it. I will also mention though because we've energized two diesels we take credit for whatever equipment they power that's not affected by

the initiating event.

For example, when we break the injection line and I'll look at it from the standpoint of low pressure injection it will defeat the ECCS functions. But it would not defeat the RHR removal function, remove the heat from the sump. And we'll show that on a later figure. So again we have two diesels being energized and that's what we're crediting.

MEMBER SIEBER: Do you need two diesels or could you get by with one?

MR. STACK: For the limiting design basis accidents we need two.

MEMBER SIEBER: Okay.

MR. STACK: When we look at this picture, we look at the main safety systems. Safety injections compromised of medium head safety injection, a combined low head safety injection, an RHR and then accumulators. So we'll run through those briefly.

You'll see the MHSI here. It's taking suction from the IRWST, pumping back into the cold leg. We have next a combined RHR and LHSI. So we have here where we're taking suction again from the IRSWT, LHSI with an RHR heat exchanger right behind it. That RHR heat exchanger is cooled with component cooling water. And it's initially aligned for the

cold leg.

And then what's going to happen after an hour into a LOCA, it will be realigned to the hot leg to provide hot leg injection. We also have accumulators that are in here that are standard from what you've seen on typical PWRs. Those are also connected to the cold legs. And that's basically a pretty standard architecture for an ECCS system.

Next up we move to the IRWST again in containment. Sorry.

MEMBER CORRADINI: Can I ask a question? I'm not on the Subcommittee. So probably I'm sure you brought this up. So there's no high head injection.

MR. STACK: Yes, sir. That's correct.

MEMBER CORRADINI: But since it's a normal -- Well, since I remember it as a normal PWR, you would have to have charging flow. So in the plants I'm familiar with you have at least three charging pumps, one positive displacement, a couple of centrifugals. Those centrifugals in this case can't make up decay heat levels or they just don't exist in this design.

MR. STACK: There are CVCS pumps like you would see. Typically if you stop back and you looked at --

MEMBER CORRADINI: Right. Those are what I'm thinking about.

MR. STACK: Yes, typically what you would find -- I'm sorry. My background is mainly through the B&W plants. They have two types of designs. They have one type of design where you have three centrifugal high, high head safety injection and make-up pumps or CVCS pumps and they serve both functions.

MEMBER CORRADINI: Right. Exactly.

MR. STACK: And that's typically in the B&W fleet what you'd find at most of the plants, Oconee, ANO I, Crystal River 3.

Alternatively you would have a design where you'd have a high, high head make-up pump that's not providing a safety injection function. And then you would have a medium head safety injection pump. So it's more of a split system.

MEMBER CORRADINI: And that's what we have --

MR. STACK: And that's what we have here and that's in fact what they have at Davis-Besse, for example. So again the arrangement we have here conceptually you can think of it that way. Again medium head safety injection, safety related.

MEMBER CORRADINI: Okay.

MR. STACK: Okay?

MEMBER CORRADINI: That helps. Thank you very much.

MR. STACK: You're welcome. So back to this what we have here inside in the containment we have our IRWST -- and I'll get my pointer sooner or later -- and when you look at the IRWST it's nominally about 500,000 gallons. It's 1700 ppm in rich boron in the IRWST.

So the concentration compared to the operating fleet is a little low. Typically you're seeing the operating fleet 2,000, a little bit above 2,000 ppm.

So then on here and we haven't really discussed this much in the past, the extra borating system that's not shown on here. So in addition we have an extra borating system. And that is safety related. It's a two train system.

For the extra borating system, there are two tanks. They're nominally 7500 gallons each. And they're at 7,000 ppm. So compared to the operating plants they're more like a chemical addition system that you would see in the operating plants except for here they're safety related.

MEMBER CORRADINI: So they're like a BIT

in the old but not pumped.

MR. STACK: These are pumped.

MEMBER CORRADINI: Okay. So it's like a BIT, boron injection tanks the old, old systems I remember.

MR. STACK: But this is actually -- You're having -- This is not just a pressurized tank that's injecting. This is a positive displacement pumped injection system.

MEMBER CORRADINI: Okay.

MR. STACK: They're about 50 gpm for each of the pumps. There are two pumps that are safety related. They're EDG backed. They're alternately fed on power. Again about 7,000 ppm.

MEMBER BLEY: Which accidents require those?

MR. STACK: Okay. These are relied on for steam generator tube rupture as well as safety grade cold safe shutdown. When we're looking at borating up to get to our shutdown margins, we're crediting it for safety grade cold shutdown as well as tube rupture.

MEMBER SIEBER: What's the solution temperature have to be for 7,000 ppm boron?

MR. STACK: We can look. It's pretty typical to what you would see on the -- The 7,000 ppm

is pretty typical of the operating.

MEMBER SIEBER: Yes, it's around 100 degrees or something like that.

MR. STACK: It's higher than that. We'll look that number up for you.

MEMBER SIEBER: How do you keep it hot?

MR. STACK: Yes, you have to keep it hot. That's correct.

MEMBER SIEBER: How do you do it?

MR. STACK: How do you keep it hot? These are -- I'll go back and look at it. I'll confirm whether or not we have any heat tracing. The buildings these are housed in are all safety grade buildings that are maintained at temperature.

MEMBER SIEBER: Yes, but that's part of your emergency equipment that has to be functional during an accident because that's an accident mitigation.

MR. STACK: Understood.

MEMBER SIEBER: Yes, I'm curious. That's pretty hot.

MR. STACK: So basically that's what -- There was one question again related to the EDS and what we use it for and again in particular it's used on tube ruptures as well as safety grade cold

shutdown. It's not used for standard LOCA mitigation.

The other thing we have in the design in train four we have a severe accident heat removal system which is a nonsafety related containment spray if you wish. And in that system what it's doing is it's providing active cooling of the corium that you would have. And I'll show a picture of that a bit later as well as providing active depressurization of the containment.

MEMBER CORRADINI: So this is a separate -- The SAHRS is not a piggyback in any of the other green and orange. It's a separate system for the core retention device and for containment spray.

MR. STACK: Yes. It's taking suction from the IRWST.

MEMBER CORRADINI: The same water source.

MR. STACK: Same water source.

MEMBER CORRADINI: Okay. But different pumping system.

MR. STACK: Yes.

MEMBER CORRADINI: Okay.

MEMBER ABDEL-KHALIK: Which legs do the borating systems inject into?

MR. STACK: All four. The pumps at the discharge of the pump they divide and go -- Each pump

divides and goes to cold legs.

MEMBER CORRADINI: I guess this is maybe the wrong time. But just a question. So if it has to be heated and this is for a steam generator tube rupture only though. Maybe that's the answer.

MR. STACK: For the EBS it's being relied upon for safety grade cold safe shutdown as well.

MEMBER CORRADINI: Okay. Thank you.

MEMBER STETKAR: I can help you out. In the DCD, it says it's designed without heat tracing.

MR. STACK: That's what I remember. Thank you, John.

MEMBER STETKAR: You're welcome.

MR. STACK: So that's an overview of the main safety systems on the primary side. We'll move over to the secondary side.

What you see on the secondary side is again is we have suction from an emergency feedwater storage tank. Each one of those. And these are housed in the safeguards buildings per building. We have suction there to a pump. The pump injects to steam generator. The generator goes to the discharge.

There is an MSIV. Upstream of the MSIV you have two 25 percent spring loaded safeties and then you have a 50 percent safety grade main steam

relief train. On the main steam relief train, it's contributing in part on making the MHSI pumps work because in this point you have safety grade secondary side depressurization where you initiate a partial cooldown when you have an SI actuation. So you basically lower the secondary side pressure such that the MHSI pumps is capable of injecting into the core.

MEMBER CORRADINI: So this is so-called crash cooling ability.

MR. STACK: I don't know that I would term it a crash cooling capability. Normally when I think of a term like that you're looking at taking the plant very, very, very far down in pressure.

MEMBER CORRADINI: Okay. But the plan is to take it from operating pressure down to below discharge head of the --

MR. STACK: This is taking you down to about -- I'll look up the number. It's about 840 pounds.

MEMBER CORRADINI: The discharge head of the MHSIs are like 1500.

MR. STACK: Yes.

MR. STACK: So we're taking the secondary pressure --

MEMBER BANERJEE: Programmed cooldown,

Mike.

MEMBER CORRADINI: I'm sorry. Programmed cooldown. I apologize.

MR. STACK: So we're taking -- And the number is about 840 psia. And you're going down at about 180 degrees per hour.

MEMBER CORRADINI: Okay.

MR. STACK: This is a feature also that has been used on the German plants previously. This isn't something new worldwide. Features like this are also being looked at when we are talking -- Mr. Skillman and I were talking before this on some of the extended power uprates and you're looking at some of the operating fleet that are looking at using safety grade secondary side to pressurization to support them in their power uprates.

MEMBER BANERJEE: I think that concern has always been that you'll get an extended period of refluxing for small breaks.

MEMBER SIEBER: Right.

MEMBER BANERJEE: And whether there is -- Now they have designed their hot legs so they don't flood in refluxing.

MEMBER CORRADINI: Again? I'm sorry.

MEMBER BANERJEE: I'll go into it offline

with you in detail.

MEMBER CORRADINI: Thank you, Professor Banerjee.

MEMBER RAY: Do you keep the bubble on the pressurizer?

MR. STACK: For?

MEMBER RAY: The secondary side. The cooldown using the secondary side depressurization.

MR. STACK: Yes, you do and -- Well, for the -- Typically when you're looking at this, you're going to be using it again to support. For that depressurization action, you're supporting the LOCA events.

So when we look at this, it's activated for a LOCA event where you have this programmed partial cooldown. For a tube rupture you're going to raise the pressure in the effected generator. So again you have a safety grade relief valve that allows you to adjust pressure in it. And in those cases again whether or not you hold the level -- You've got to hold the level in the pressurizer depends on where the break is and how it goes.

Obviously, if you had a large break you're not going to hold level in the pressurizer. So it really depends on the LOCA that you have itself. For

cooldown events where I'm trying to do safety grade cooldown you would maintain pressurizer level for standard cooldown.

MEMBER RAY: And you're naturally circulating.

MR. STACK: If I'm in a natural circ condition.

MEMBER RAY: Well, I mean for a small break like a tube rupture or --

MR. STACK: And again if I didn't have offsite power, yes.

MEMBER RAY: But if you had offsite power you'd keep the reactor coolant pumps running.

MR. STACK: Actually, I would like to go back and doublecheck that relative to there is an automatic pump trip on this plant. For the tube ruptures, my recollection is that the automatic pump trip is not actuated.

MEMBER RAY: Well, for a small enough break I would think that's true. But if you're coming down to this safety injection pressure that you're trying to get down to, I'd be surprised if the reactor coolant pumps are running. So I would assume you were using natural circulation. That's my question.

MR. STACK: Yes. What's happened -- We

can look back into our safety analysis on that. Typically it's usually desired to keep the RCPs running if you can typically in the past. But it's been in the limiting case analyzed to not have the RCPs running.

MEMBER RAY: Okay. But it's a simple question about are they running at the pressure that you're trying to get down to. That's where I'm trying to get with my question. You're reducing primary coolant system pressure down to the point where you can get flow through the safety injection train.

MR. STACK: That's correct.

MEMBER RAY: Okay. And I'm just asking a question if the reactor coolant pumps are running at that point.

MR. STACK: In a limiting case they're not.

MEMBER RAY: I would think not. So I would assume that -- I'm just asking questions about things like transferring a bubble to the head and stuff like that when you don't know what the primary coolant flow is in the accident sequence. I thought that was where some of the other questions were going.

MEMBER CORRADINI: You know more than I.

MEMBER RAY: All right. You'd better go

on.

MEMBER ABDEL-KHALIK: Could you find out what the reactor coolant pump trip criteria are for this plant?

MR. STACK: As far as the automatic trip?

MEMBER ABDEL-KHALIK: No, manual. In the POPs what the operators are instructed to do in the event of a LOCA.

MR. STACK: Well, again let's back up. One of the comments I made earlier was that we have no manual operator action for 30 minutes for the design basis accidents. So the operator is not required to manually trip the pumps. I mean in most of the operating plants you have a two or three minutes automatic or manual operator action to trip the pumps. And you don't have it on this plant.

MEMBER ABDEL-KHALIK: So what would be the automatic reactor coolant pump trip criteria then?

MR. STACK: Okay. We can get the criteria for that. But it's defined in chapter seven.

(Off the record discussion.)

Okay. We can -- We'll be happy to read that back in. But it's captured in the FSAR what the trip criteria are.

MR. STACK: So where were we? When you

look at the plant though, the emergency feedwater pumps are motor driven. They're EDG backed and two of the four of them are SBO backed. In addition, there is interconnecting piping on the suction and discharge side of the emergency feedwater system that allow you to cross connect the suction sources as well as the discharges.

Back to our picture on the containment again, what we see on the containment is a post tension concrete containment with a steel liner that's shown in brown. We have an outer wall that's made of reinforced concrete again that's providing airplane crash protection as well as protection against other hazards like tornado, missiles, for example, and as well as external explosions you may have. And as we mentioned earlier, it's a filtered vent annulus that's providing safety grade dose management for the plant.

In followup we'll go a little further on the external hazards and you had the picture in mind. The overall strategy for protection against external hazards in the EPR is kind of a blended approach. What you see in the buildings in blue is we have the reactor building in the center, the fuel building and safeguards two and three. And the main control room and the remote shutdown station are housed in

safeguards two and three.

Each of those is housed with a shield building. So there's a shield building not only over the containment but over these safeguards buildings as well as the fuel building. So those are protected from an airplane crash if you wish by those shield structures.

Separately from that the buildings you see in gray are protected by physical separation. So safeguards one and four as well as the EDGs here one and two on this side and three and four on this side as well as the UHS towers one and two here and three and four here are protected by physical separation as well as the intervening containment in the safeguards buildings between them to keep them physically separated and protected.

The other buildings that are shown in white on here that include the turbine building, the switch gear building, the access building, the nuclear auxiliary building and the radwaste building, those are not protected from these hazards, these airplane crash hazards.

Moving onto severe accident mitigation features, these are features that were put in largely to address the phenomenon from SECY 9016. What the

EPR contains as far as mitigating systems, there's a high pressure core melt to pressurization system that's comprised of two trains. They're powered from trains one and four. There are two valves in series. It's all manually actuated. Our goal is to get the RCS pressure below 200 pounds to prevent direct containment heating.

There is also an ex-vessel melt stabilization, conditioning and cooling system. And what we're trying to do is stabilize the core ex-vessel first and then get it poured into the core catcher if you wish where it will be ultimately cooled.

And that will take us to our third phase of this. There is a long-term cooling system. It's the same severe accident heat removal system I showed on the earlier slide. That's going to provide cooling of the corium in this area as well as spray back into the containment.

And then finally there are -- We control hydrogen concentration. This is a large dry containment.

I will mention and I think we discussed at the last one that it was a two zone containment that we actuate open such that it converts into a single

zone containment. And it's about 2.8 million cubic feet. So it's rather large. Not quite as big as a Bellafonte, but it is larger than a Callaway. But it's effectively a large dry containment.

We have passive autocatalytic recombiners inside containment to manage hydrogen content.

MEMBER CORRADINI: Have they been designed as a placement yet? Has the design proceeded to detail enough so that they understand where they want to put these things inside containment?

MR. STACK: We've chosen the nominal number and they've generally been located. I'm not sure about final design locations of the PARs at this point. As far as the equipment itself, these have been used in Europe for a number of years.

MEMBER CORRADINI: I was under the impression that the PANDA facility and PSI is being used to test some of these for AREVA if I've got the right technology. Or maybe I'm confused about technologies.

MEMBER POWERS: I'm certainly not aware of PANDA doing any work on these. It strikes me that the --

MEMBER CORRADINI: Mainly the cabinet placement within a structure about mixing. But that's

what I was --

MEMBER POWERS: No. I would think that if there's any work going on with that it's being done at Thai.

MEMBER CORRADINI: Where?

MEMBER POWERS: Thai.

MEMBER CORRADINI: Okay. The one in --

MEMBER POWERS: But to my mind, what the issue on PAR location now comes out of Fukushima is we have evidence of flame acceleration over relatively short distances which I find remarkable. And now does that change your thinking about PAR location or not? And I don't know that answer to that and we may not know the answer until we get in and look at the reactor buildings at Fukushima.

But I mean where I had difficulties now understanding the strategies on igniter location doesn't really have anything to do with PARs. It's just where you would ignite things under Station Blackout accidents is this apparent flame accelerator or detonation over relatively short scales relative to what my thinking was based on turbulence induced flame accelerator.

MEMBER CORRADINI: The only reason I ask the question is -- I guess I should have asked it this

way. With the PARs system that you guys have in the concept design, is there an upper limit you want to be able to keep the concentration below?

MR. STACK: Yes.

MEMBER CORRADINI: What is that?

MR. STACK: It's the --

MEMBER CORRADINI: That's alright. If you've got it later, we can just do it then.

MR. STACK: Well, I don't have it later. We can look up the number. But we're keeping it below the typical combustion limits that you would normally have.

MEMBER POWERS: They're really trying to keep it below four percent.

MEMBER CORRADINI: Four percent.

MEMBER POWERS: Yes.

MEMBER REMPE: There may be calculations to estimate where areas of concern are.

MEMBER POWERS: Yes.

MEMBER BANERJEE: What's the LFL? Two percent or?

MR. STACK: It's around four. The overall number is time with 100 percent cladding oxidation.

MEMBER BANERJEE: For the LFL?

MEMBER POWERS: I mean, LFLs and things

like that depends on what direction you're going on in and things like that and what the containment atmosphere temperature is. What I tend to worry about is the ability to downward propagate which is nine percent at room temperature and it goes down to zero at 500 degrees Kelvin.

MEMBER CORRADINI: That's alright.

MEMBER POWERS: But I mean what you usually worry about on PARs is where they've linked and that's very low temperature.

MEMBER CORRADINI: The concept -- I won't because again this is probably all discussed somewhere. But the concept is to have these well-placed enough so that with some concept of the mixing you keep the average concentration below that limit you just mentioned.

MEMBER POWERS: Yes. The containment is robust. And it will -- I mean these large containments will tolerate pretty good pops. So it's not crucial. I don't even think the PARs are called out as safety.

MEMBER CORRADINI: Okay. Thank you. That helps me enough. I'm fine.

MR. STACK: In summary, we'll go to where are we now in the DC application. Again what you see

is that it's a US EPR is an evolutionary active plant design. Again, we've used improvement analytical methodologies and the FSAR is consistent with key NRC guidance documents, in particular, the SRP.

Exemptions and exceptions have been minimized. And we haven't taken any credit for RTNSS as a part of the design as part of the license.

With that, that closes out again background section. We'll move into the chapters. And the chapter discussion of these is just going to follow at 80,000 feet. What are the topics that are covered and it's just right out of the FSAR. And then some of the key highlights.

Again, for chapter three, again design of SSCEs, systems, structures, components, equipment. And again you're looking at the standard set. There is nothing added to these. So the topics for this plant.

When you look at the key items of interest, we looked at these basically from the standpoint of let's start at overall what affects the site first predominantly and then let's get into some of the more details inside the plant.

Some of the main points out of this, the EPR is designed to have external flood protection

where we use a dry site concept. In this the site platform level or grade level arranged above the maximum level for design basis flooding, that's consistent with pretty much all of the other ALWRs were licensed. It comes out of the EPRI ALWR requirements. In this we're keeping the max flooding level at least one foot below grade in the limit as far as the way what's required in the license.

When we move to seismic design bases, the plant has been designed with --

MEMBER SHACK: What's your flood margin?

MR. STACK: The flood margin is dependent on site specifics.

MEMBER SHACK: So vital equipment is how much higher than this?

MR. STACK: Okay. So when you look at the design right now, the design again uses what we'll term the dry site concept. If we went and sealed the doors and we made all the doors at grade level flood proof, the first time we would get into trouble was when we would hit an air intake into the buildings whether it's an EDG or a fresh air intake for HDAC.

The lowest elevation above grade is about 39 feet above grade for the air intakes. So there is a minimum number of doors at grade and the air intakes

are elevated for this plant.

MEMBER CORRADINI: And the base design requires water-tight doors.

MR. STACK: The base design does not require water-tight doors. Typically what would happen is our COL applicants will have to confirm that they have adequate flood protection when they do their chapter 19 evaluation of external hazards.

If someone, for example, cited this at a location where it was very close to the flood plain, then they would typically go and say "We're going to install flood proof or we're going to install leak tight doors at grade level to provide that level of protection." But that would be dealt with on a site specific basis.

Moving onto seismic design, the seismic design is designed at a 0.3 g peak ground acceleration. We're using a European utility requirement spectral shape. We've also added to that a high frequency control motion at 0.2 g horizontal and 0.18 g vertical to that. And the plant is being designed for a range of soft, medium, hard rock sites.

So we have a pretty broad envelope as well as a pretty robust set of spectra to consider. And then the last point we mentioned earlier that we have

the reactor building safeguards two and three in the fuel building that are designed with a reinforced concrete shield building.

Again that's providing protection against missiles including large commercial aircraft. It's also providing the standard GDC 2 protection that you would expect.

Moving into one of the other items of interest in these, when you develop a certified design one of the issues comes to what's an essentially complete design particularly as it relates to cybil. And to demonstrate that we have an essentially complete design for the US EPR we're required to look at critical sections and evaluate and design critical sections in the plant.

AREVA used a three step methodology to identify which critical sections do we want to look at. And that included a qualitative part. Does the structure support some qualitative safety function, for example, providing a barrier to radioactive release. So, for example, on that you say I need to look at the containment.

Alternatively, we also looked at quantitative criteria where we looked at the finite element model. We looked at highly stressful

locations and say, "These are highly stressful locations that we should analyze for critical sections."

And then there was a third supplemental criteria that was really aimed at maintaining a balanced representation of critical sections of the plant. In total, we're looking at 36 critical sections that encompass the Cat 1 structures for the US EPR.

MEMBER SKILLMAN: Tim, before you go on, in the status report about 120 pages of comments, approximately 10 percent of those, about 12 pages, are pages that focus on compliance with Reg. Guide 1.29 SSCs. And they're riddled between safety related and important to safety.

And when you talk about components what comes to my mind is where are you or where is AREVA in resolving the safety related and important to safety and those with augmented quality structure, systems and components in conformance with Reg. Guide 1.29?

This is a riddle that's gone on for years and years. There has always been confusion. But the number of pages of comments leads me to believe that there is a turbulence under this issue for this application.

MR. STACK: I don't know if turbulence is a word I'd use. I would say right now there is an open item to clarify out the classification process in Section 3.2 of how it's applied to address the important to safety question. It appears as though there are multiple open items. Not just one. There are numerous open items.

MR. STACK: Could be more than one. I'll say that there's an RAI.

MR. GARDNER: Many of those RAIs have been resolved. There is a few questions that are still open, but we're submitting a revision to that section. But I would say that part of the discussion that got added was that those things that meet the definition of 50.2 and then those things that are deemed risk significant under the RAP program, identify those things of being important to provide protection if seismic shows up.

The other thing if you're talking about 1.29 specifically from seismic, I mean is that the question you're asking?

MEMBER SKILLMAN: To me seismic is a piece of it. It's really the categorization in ensuring that what's going to be design certification that the final categorization of these structures, systems and

components meet the regulation so that we're not sitting in this room three or four years from now saying "Gee whiz, we botched that because we didn't require conformance with well-known regulation."

MR. GARDNER: I think that we would say that we do comply. I guess maybe we would explore the seismic piece because I'm not sure with the 1.29 the question you're asking. But we don't credit anything unless it's been seismically qualified. Say, in terms of the RAP program and the PRA where we're looking at these things that have some risk significance and importance to safety, if it's not been designed seismic then it's simply assumed it failed. It's just not credited.

And that's maybe the easiest way I can help explain. So for things that are designated as safety related or seismic category one or two, then there's a credit for performance. If not --

MEMBER STETKAR: Darrell, you have to be a little bit careful about referencing the PRA because you don't have a seismic PRA. You only have a seismic margin.

MR. GARDNER: Seismic margin is PRA.

MEMBER SKILLMAN: It is not assumed to fail because seismic events are not modeled in the

PRA. Just a clarification.

MR. GARDNER: But simply no credit would be given if it weren't designed for seismic. In other words, the safety case is based on those things for which we have specifically designed a function.

MEMBER SKILLMAN: Maybe I'll follow up on this with the staff. It leaves me ill at ease that there seem to be so many RAIs and open questions in compliance with Reg. Guide 1.29. And as it turns out Reg. Guide 1.29 applies to all of the smaller components in the plant to the classification system.

So if there is in my mind a burden of questions my first question to myself is what's going on here. Why is this so complex? And it becomes more confusing when the titles of important safety and safety related that are not synonymous are being challenged by the staff. So I find this disconcerting.

MR. GARDNER: And maybe I'll try to address that only briefly but there is an open item two. I think part of those open items was a lack of clarity on our part in describing how that classification system worked which we are improving and we submitted some material for the staff review that we've gotten feedback on. So I think we're

converging on that. Not all the answers are in yet. They're still as I recall a couple of open questions.

MEMBER SKILLMAN: Did I hear you say this is work in progress? It's not settled yet. We're still working on.

MR. GARDNER: Not so much that it's indecisive. We simply have not just answered all of the questions yet because where we're allocating resources to work on them. Not because we don't know the answer. We just haven't answered those questions.

MEMBER SKILLMAN: It's a work in progress.

MR. GARDNER: Work in progress, yes.

MEMBER SKILLMAN: Okay. Thank you.

MR. STACK: Okay. Now we'll move into more into the competent level of chapter three. And there are three items of interest we put in here deal with first leak before break where we've have a leak before break for the reactor coolant main loop, the pressurizer surge line and the main steam lines inside containment. Those are using NUREG 1061 as well as the SRP as guidance for how those are done.

The staff will be covering some detail on what they've done as confirmatory analysis. I won't spend much more time on that yet.

MEMBER SHACK: Your piping design is then

finalized enough that you could actually do this. Or is this a commitment to design these leak before break?

MR. STACK: I'm not sure I understand your question.

MEMBER SHACK: Do you have a piping geometry that you've demonstrated to meet the leak before break criterion or you're just saying that when you've had the final design you will design it so that it meets leak before break?

MEMBER SIEBER: Due to commitment or fast.

MR. STACK: I would say two things. One, I will get back to you. The second thing is my understanding is we've established the critical break locations for the --

MEMBER SHACK: Okay. So you haven't done this, but you've done the structural one that you've done enough of the design with these critical sections.

MR. STACK: The things that we're crediting.

MEMBER SHACK: The things that you're crediting, okay. So it's a critical sections approach rather than a final design. But it's more than a commitment because you've got the critical section.

MR. STACK: Now other piping is not designed. But the reactor coolant loop piping we've done the design necessary to answer these kinds of worst critical break locations.

MEMBER SHACK: That's fine.

MR. STACK: Next up we had on jet impingement and pipe whip effects. In this one in particular there were nonconservatisms that were identified in the ANS 58.2 methodology. As a result of that, AREVA submitted a proprietary methodology for dealing with the external loading effects for the jet impingement, unsteadiness, resonance and jet reflection. That's a proprietary report that again that AREVA has submitted.

MEMBER SHACK: Is it still being reviewed?

MR. STACK: Darrell, has the review been completed on the --

MR. STACK: 10.318.

MR. STACK: I thought it was ongoing, but 10.318.

MEMBER SHACK: We'll eventually see that in some fashion or the EPR subcommittee will see that in some fashion eventually.

MR. GARDNER: That's correct. There are still open questions that are being resolved. There's

an open item there.

MR. STACK: And then finally -- thank you. On the in-service test program, it's a fully described program in the SAR and one key point from these is it includes provisions for full flow testing the pumps and valves.

We'll move onto the chapter nine. And in general when we got into chapter nine, most of the systems you see in this, HVAC systems, water systems, are pretty typical of what you would see in an operating plant.

So just when we looked at the cooling water systems we just wanted to get an 80,000 foot overview of how they worked. And what you see in this is we start here in the CCW system, component cooling water. Sorry. Component cooling water, essential service water, ultimate heat sync, generator, safety chilled water system.

So we'll start on the component cooling water system. Typically you're looking at removing heat from nuclear island loads. These could be things like RCP thermal barrier coolers or RHR heat exchangers. It's also removing heat and this is in trains two and three from the safety chilled water system. In trains one and four, those safety chilled

water chillers are air cooled.

Here we're using chilled water to cool our HVAC loads. And again that's safety related in this case. And we just have a closed loop for the CCW pump. It circulates that back to a CCW heat exchanger. And that's transferring heat to the essential service water system.

And the essential service water system, it's going to take suction from a basin of a mechanical draft cooling tower, UHS basin. And then it's going to pump it and it's going to cool primarily two loads. The CCW heat exchanger and then it's providing direct cooling for the emergency diesel generators.

And then that's going back to a UHS tower. These are mechanical draft, induced mechanical draft cooling towers, that have all the appropriate missile protection, etc. GDC 2 protection that they need. And that's the general train.

MEMBER SIEBER: There are separate cooling towers from the main unit cooling tower.

MR. STACK: Yes, they are.

MEMBER SIEBER: And how much head and flow do you need to operate them at the right heat exchange rates? How big are the emergency service water pumps?

MR. STACK: Okay. We'll get to that number in a second.

MEMBER SIEBER: Okay.

MR. STACK: But that's as far as the safety grade cooling chain that's the safety grade cooling chain that we see for the US EPR.

MEMBER SKILLMAN: Let me ask this about the safety grade chilled water system. How common is it to have a safety grade refrigeration compressor, safety grade refrigeration heat exchanger and safety grade whatever the refrigerant is that you're using? How common are these?

MR. STACK: Common in which regard?

MEMBER SKILLMAN: I recall years ago having extreme difficulty getting safety grade refrigeration equipment. And here you are. This design is depending upon this safety grade chilled water system to cool seals and other critical functions.

So that suggests to me that the equipment that's in the safety grade chilled water system will be a complex of components that are themselves safety grade. They're going to be seismic 1, QA 1. They're going to have a whole Appendix B to 10 CFR 50 program associated with them.

MR. STACK: That's correct.

MEMBER SKILLMAN: So how common is this equipment? Where do you get it?

MR. STACK: In most of this I mean some of the designs we see in this we are adopting our design from Europe. But as far as given in the United States, we've seen equipment qualified, safety grade cooling systems like this qualified, in the past. And it would have to in fact be qualified for this application and just as you said it would have to meet all the Appendix B requirements to accomplish that.

MEMBER SIEBER: These are not refrigeration systems. These are just heat exchangers. Right?

MR. STACK: This is just a heat exchanger.

MEMBER SIEBER: Right. It's commonly qualified.

MR. STACK: The heat exchanger is very common. The chillers themselves is more of a question on the safety -- The chillers themselves are less common especially in the United States.

MEMBER SIEBER: Right.

MR. STACK: But in fact --

MEMBER SIEBER: These are mechanical chillers.

MR. STACK: Yes.

MEMBER SIEBER: Okay. For the refrigerant.

MR. STACK: Yes.

MR. GARDNER: The plant's licensed now for the big chillers in their air conditioning systems.

MEMBER SIEBER: Right.

MR. STACK: It's not necessarily that common. But people have done it before.

MR. GARDNER: In terms of air conditioning, aux building, safety grade ventilation with safety related chillers.

MEMBER SKILLMAN: Thank you. Okay.

MR. STACK: The flow rate 19,300 gpm per ESW.

We'll move onto fuel handling and storage. Just some of the key points. The first one is we just covered the spent fuel cask transfer facility design in the previous discussion which I didn't have the pleasure to present. I'm very disappointed with that.

(Laughter.)

Next up on the fuel rack modules. Basically our design is based on -- it's covered in a technical report, TN Rack .0101, which details the overall modules and methodology. It's based on our

dry cask and our transportation cask designs that we've used in the past.

In those we have over 40 years of experience with doing those through TransNuclear. And it's building on that experience for this application.

And then finally we wanted to cover spent fuel pool cooling and makeup. For spent fuel pool cooling first, one of the things that's kind of unique about the US EPR is that that safety grade spent fuel pool cooling. So you have fully redundant safety grade cooling of spent fuel.

So that's in two trains. Each train has two safety related pumps and one heat exchanger that are providing cooling for the spent fuel pool.

Separately from that, for makeup, there is a EDT backed seismic Cat 1 makeup pump that takes suction from two transfer canals inside the spent fuel pool. They are both seismically qualified. And that's the normal method.

And then there's a backup method that relies on the seismic Cat 1 IRWST as the approved method for how we're going to provide makeup. And that's per the SRP and one of the Reg. Guides. I forget the number that indicate that's an acceptable way to provide makeup. So that's basically when you

look at the design that's what's included in the US ERP.

MEMBER SIEBER: The IRWST are the ones in containment, right?

MR. STACK: Yes. I would also mention that there are also other methods beyond this that are also available. Demin water storage tank is 600,000 gallons. That's not seismic. There are a number of other seismically and non-seismically qualified sources that we can use for this.

MEMBER SIEBER: Okay.

MR. STACK: We'll move onto chapter 14.

MEMBER BLEY: So if you're using the IRWST as a backup, if you're using it as a backup, what kind of requirements will have you on what volume you have to save in there for the core should you ever need it?

MR. STACK: And again when we look at the normal backup and we look at spent fuel pool makeup, there are probably four or five or six different ways we can provide makeup for the pool. Again, some are seismically qualified.

MEMBER BLEY: But if you should, not you, but if the guys running the plant should go to the RWST --

MR. STACK: Okay.

MEMBER BLEY: -- what kind of administrative requirements or automatic requirements will maintain whatever needs to be maintained for the core?

MR. STACK: And at this point in time we've not established formal limits on that. Ultimately, those will be in the EOP though.

MR. GARDNER: Well, the tech specs. The tech specs have a limit. So I think the short answer to your question is you couldn't drop it below your tech spec minimum required volume for the RWST.

MR. STACK: Or you may have to use another source. Again, the IRWST is credited source. But there are other more preferred sources.

MEMBER BLEY: I just get a little nervous of having not source be a credited source to go somewhere else.

MEMBER SIEBER: Yes. One of the issues is there aren't very many borated sources and I presume you want to meet some minimum boron concentration in your makeup or at least limit the amount of makeup water you use in a spent fuel pool leak so that the pool boron concentration is not below some minimum value.

MR. STACK: That's correct. I would also

mention that when you look at the -- Let's talk capacity for a moment. When you look at the sources of water that are used in this, each of them is -- the seismic Cat 1 sources to the makeup pump, each one is 50,000 gallons. It's not an enormous amount of water.

These pumps are small. This pump is small. It's a low capacity pump and you're really just making up for evaporation. I mean that's really what the design basis of this safety related makeup is.

MEMBER REMPE: Do you have high density racks or have you decided what type of racks you'll have in there?

MR. STACK: These are low density racks.

MEMBER BLEY: I'm sorry. I'm sitting here thinking about this and I'm thinking of reading an event report one day where they find a gigantic flood where you'd overspilled the pool and your RWST isn't where it ought to be.

MR. STACK: Understand.

MEMBER BLEY: We move from design to administrative controls to protect that RWST.

MR. GARDNER: I'll just make sure because I think we've --

MEMBER BLEY: I'm thinking of an oddball

event. I'm not thinking of design conditions.

MR. GARDNER: Yes, because the source of water for makeup, a credited source, is not the IRWST.

MR. STACK: That's correct.

MR. GARDNER: We have a source that you would make up from it that is credited that's the normal makeup source that's in excess of the 50,000.

MEMBER BLEY: I understand. But you're given guys an opportunity to use water and people in the plant use water not always in the ways designer figured they would.

MR. GARDNER: Understood.

MEMBER BLEY: I'm just wondering why you rigged it so you can do that with all these other sources that are bound to be good enough. I can just think of once you fall back on administrative controls things happen sometimes. I don't quite get it. As you point out, you've got lots of sources of water. Go ahead.

MR. STACK: We'll move onto the initial test program.

MR. THALLAPRAGADA: We just want to make one correction. This is Pavan Thallapragada from AREVA. The fuel racks are two kinds. There are high density racks and low density racks in the spent fuel

pool.

MEMBER REMPE: Thank you.

MR. STACK: Okay. Back to the initial test program. I'm sorry. Verification in chapter 14 and there are basically two parts to this, the initial test program and ITAAC.

And when you look at the first main part in the initial test program we're really trying to demonstrate functionality prior to fuel load. When we break down the initial test program, there really are two parts. There's a pre-operational part that's taking you up to fuel load and then there's the start-up part that's basically taking you to final turnover to the customer.

But again in terms of these we're trying to demonstrate functionality. We're also trying to demonstrate the EOPs as well as the tech spec surveillance programs. Trying to confirm any unique US EPR design features. And then cover transient tests that demonstrate the ability to handle plant perturbations.

In total, there are 173 pre-operational tests and 49 start-up tests. And the conduct of the overall initial test program is going to be the COL applicant's responsibility.

As far as unique features, and we could cover a variety of these, we decided to chose several here for what we thought would be of interest. And I'll cover a few of these.

First, let me mention the fixed self-powered neutron detectors, the SPNDs. The SPNDs as we talked about in our chapter seven discussion are used as a part of the in-core reactor trip for the protection system.

I want to come back and before I move on with this to the cold question which that was in the Calvert Cliffs on the mixed core. And US EPR is currently not licensed for mixed core. And that's the current licensing basis of the plant.

MEMBER ABDEL-KHALIK: Not licensed.

MR. STACK: It's not licensed for mixed core.

MEMBER ABDEL-KHALIK: So what was sent to us at the meeting with the COL applicant?

MR. STACK: I think and I looked back through transcripts. The staff position on it was correct. They've imposed a restriction in chapter 15 that said you can't use mixed cores.

As far as the applicant or the licensee down the road, in principle they could always take a

plant specific license amendment request that would allow them to do a mixed core or something else. So they always have the latitude to do that. The design certification doesn't provide justification for mixed core.

MEMBER ABDEL-KHALIK: But if you have a mixed core, I mean is that at all a possibility with an in-core trip system?

MR. STACK: At this point in time, we haven't really thought about that as a specific question that we're designing to. And we're not licensing the plant that way at this juncture.

MR. STACK: So again we look at the SPND.

CHAIRMAN ARMIJO: I've got to ask. Is there a fundamental reason why you're not doing that?

(Off the record comment.)

I understand that, but I wouldn't (Laughter) that wouldn't give them flexibility to buy --

MR. GARDNER: I don't think we're saying that it's not capable. I think certainly what we're saying that as part of design certification we aren't requesting or proposing codes and methods to certify use of mixed cores. Certainly it's possible.

CHAIRMAN ARMIJO: My question was more

towards is there anything, fundamental or technical reason why this reactor couldn't handle it.

MR. GARDNER: No.

CHAIRMAN ARMIJO: So it's really methodology, licensing.

MR. GARDNER: All the licensing process.

CHAIRMAN ARMIJO: Okay.

MEMBER ABDEL-KHALIK: But being able to detect actual flow distribution within the core when you have a mixed core so that you can reprogram your in-core trip system, that's the complexity, isn't it?

MR. GARDNER: I'm not sure I followed that.

MEMBER ABDEL-KHALIK: If you have a mixed core, do you know exactly what the flow rate in the various subchannels will be?

MR. STACK: I think those are the kinds of questions that would have to be answered as part of that licensing process for --

MEMBER ABDEL-KHALIK: So right now your in-core detection system would not work if you have a mixed core.

MR. STACK: I think we would look at it differently than that.

MR. GARDNER: We have not demonstrated

that it's an acceptable design for mixed cores. We're not saying it's not possible to demonstrate it. We're simply have not proposed that.

MEMBER SCHULTZ: And you may have to address that issue if in the future the AREVA fuel design changes in such fashion to affect assembly flow.

MR. GARDNER: Absolutely.

MR. STACK: That's correct.

MR. STACK: Okay. Just a few. I'll pick out two others from the list. We'll talk just for a moment about the standstill seals. We've had discussion on that. There will be testing of the standstill seals.

This portion of the testing of the standstill seals is aimed at proving that it will function. We've already qualified the standstill seals as part of their qualification program. Initial test program is not trying to requalify equipment for some design basis accident. It's just really trying to demonstrate that it works. And that's the focus here is proving functionality.

And then on the last one in the partial trip this is showing more of an --

MEMBER RAY: Wait, wait, wait. You went

past natural circulation.

MR. STACK: Okay.

MEMBER RAY: I've been waiting all this time.

MEMBER CORRADINI: Don't let him get too far behind. I'm waiting for the next chapter.

MEMBER RAY: I don't want to take up time with a bunch random questions here. Was there nothing you would going to say about natural circulation?

MR. STACK: I mean typically it's a pretty typical natural circ test. It's reactor coolant pumps are going to be idle and if we're going to demonstrate adequate natural circulation then -- I mean it's a pretty standard test. It's pretty typical of what people are doing now when they install new steam generators.

MEMBER RAY: Okay. But the problem is if the pressure hangs up you don't get it down and inventory declines and you get the bubble transfers to the head. And the natural circulation stops. It's that sort of a scenario. Or you overcool and it cold traps it and you can't get it restarted again. Those kind of things. But this isn't the place I can go into that.

I just take for granted that you use

natural circulation under the analyzed accident I guess and it doesn't -- it's not in your analysis problematic or dependent upon controlling the rate of cooldown or that sort of thing. In other words, you can get the pressure down so that you can make up in before you wind up with a bubble in the head.

MR. STACK: Again at this point we don't see it as being problematic. Again I will mention that for EPR right now there are four under construction at OL3, FA3 and two in China in Taishan. And any concerns typically especially on an item like natural circulation, if we did in fact discover a problem in their initial test programs there, obviously we would be transferring that to US EPR.

MEMBER RAY: It's for another time.

MEMBER SKILLMAN: Let me ask. Where are cobalt-59 SPNDs in service now?

MR. STACK: They're used in Europe.

MEMBER SKILLMAN: Thank you.

MEMBER ABDEL-KHALIK: I guess you were going to check on the reactor coolant pump trip criteria. What I heard was you get reactor coolant pump trip on initiation of SI.

MR. STACK: And it was tied to again -- we looked it up -- memory is it's tied to SI or

containment isolation and it's SI plus a DP across the pump. We could pull the exact logic, but that's basically what it is.

MEMBER ABDEL-KHALIK: So if you have a steam generator tube rupture, would you reach that trip criteria?

MR. STACK: What happens on our tube rupture in chapter 15 is the tube rupture progresses so slowly that all the actions are manual. At 30 minutes in you don't have any automatic actions. And the actions are all taken manually at 30 minutes in as the event progresses because of the size of the rupture.

MEMBER ABDEL-KHALIK: Okay.

MR. STACK: So you don't -- In particular on the tube rupture, you don't get any automatic actions.

MEMBER SIEBER: Right.

MEMBER ABDEL-KHALIK: It depends on the size of the rupture.

MR. STACK: Right.

MEMBER SIEBER: Sooner or later you would.

MR. STACK: Okay. So the --

MEMBER RAY: Wait a minute. In saying that you're crediting nonsafety related makeup.

MEMBER SIEBER: Right.

MR. STACK: As far as in the tube rupture. Yes, initially as they're going on you're crediting. Yes, you are.

MEMBER RAY: Yes. All right. So that's a difference. But again this is the place to pursue it.

MR. STACK: The last item I will mention here is on the partial trip. So we talked about having 100 percent load rejection. Wait here for a minute.

(Off the record discussion.)

CHAIRMAN ARMIJO: The chairman is tied up with -- Should he go on?

MEMBER RAY: Say it again.

CHAIRMAN ARMIJO: He's waiting to see if you want him to proceed.

MEMBER POWERS: Please.

MR. STACK: So we'll talk a bit about a partial trip. And a partial trip is where we insert some of control banks on certain conditions. And probably one of the largest of these is we talked about having 100 percent load rejection capability. So is we separate it out on in the transmission system outside of the switch yard what the EPR will do is the

load will be transferred in the electrical switchyard to power from the turbine generator output. We will power the in-house loads.

And what will be happening here is we will take a partial credit of the reactor which will reduce reactor power to blow 50 percent. And we'll stay synchronized in that case and keeping the balance of the heat removal back on turbine bypass. And then you'll allow the plant to back down in power.

In a case like that, it will go much lower than 50 percent power to a stable condition. So basically what the partial trip is doing is it's keeping you synchronized when you can which is desirable when you go through these events.

And this is again a fully integrated effects test which is testing the control system as well as all the hardware setpoints to make sure that it does what is claimed to do. Those are really some of the main items on unique features.

MEMBER ABDEL-KHALIK: Has that actually been demonstrated before? The condenser back downs?

MR. STACK: Have people demonstrated those reactions, yes.

MEMBER ABDEL-KHALIK: And mostly to remain online.

MR. STACK: Yes.

MEMBER SIEBER: Yes.

MR. STACK: And then finally that basically covers the initial test program. Then we'll cover briefly an ITAAC. ITAAC is pretty standard. The selection criteria are per the SRP 14.3.

For the US EPA I will mention there are only design acceptance criteria which are only used in two places. One is on piping design. And the other is on human factors engineering. So there's a small population of applications of DAC for the US EPR design.

Okay. So now we get to the terse presentation on PRA. And I could have brought the army of PRA experts here and I'm sure we would have a very interesting discussion for quite some time. Alternatively I'll hit the high notes.

MEMBER CORRADINI: Make it short and sweet.

MR. STACK: So chapter 19 is going to have the PRA and the severe accident evaluations. And as far as the PRA, generally speaking again what we're trying to do in the PRA is demonstrate that we had a robust design to demonstrate that we met the Commission's quantitative safety goals.

And we did a PRA that was commensurate with the design certification and the ASME standards on PRA where we have a level one, level two and level three analysis at the appropriate level of detail where we considered a spectrum of events. And again what we were really aiming at here in part is looking at -- and our level three was really aimed in large part to support the environmental report and the SAMDA evaluations for this severe accident management design alternatives to see whether design upgrades were appropriate or not and justified.

When you look at the scope of the initiating events, again consistent with what you would expect to see on a design certification we had internal events at power and at shutdown. We considered internal hazards like floods and internal fires both at power and at shutdown. And then we considered a high level of external events.

Here in particular we did a seismic margins assessment. This was looking at a 1.67 X a safe shutdown earthquake. It demonstrated we didn't have any significant vulnerabilities. The COL applicants would have to go and confirm that as a part of their work product to make sure that they have that same finding.

And then for the other external events, we have a high level qualitative evaluation that was performed similarly on this. And when we talk about flooding as an example or hurricane winds the COL applicants would have to confirm that they did not have a significant vulnerability. And that would be based on site specific details that they have.

As far as the other external hazards, a very, very high level assessment of that. And again we see that in the COL applicants where they've gone and they've evaluated those. As I've looked at those in the past, there were no significant challenges relative to the other external hazards within the COLs themselves. But for design certification this is what we've done for the external events.

When we looked at the severe accident design features, I mentioned a lot of these earlier. This is really just a kinds of reiteration of this. I was not going to go into a detailed discussion of the severe accident phenomena and what all we've -- how all we've analyzed it and what the success criteria were even in the PRA.

MEMBER CORRADINI: Can I ask a simple question?

MR. STACK: Please do.

MEMBER CORRADINI: So if the core retention device doesn't work, how does it change the LRF numbers?

MR. STACK: Off the top of my head I don't have an answer to that. That may in fact have been included as part of our analysis. And we can look at that.

MEMBER CORRADINI: Okay. And a subquestion of that is is the core retention devices under or I want to say below grade cooling system subcooled or saturated water as the plan or does it evolve from subcooled to saturated?

MR. STACK: My expectation is the latter.

MEMBER CORRADINI: Okay. I was guessing that, but I was just curious.

MEMBER POWERS: Mike, when you say if the core retention device doesn't work, what is it that doesn't work?

MEMBER CORRADINI: If you don't stop it and it's spreading, you get the traditionally guesstimated effect that it starts eating through the concrete base mat.

MEMBER POWERS: You would expect that a plant would respond much like an existing large, dry containment building in which case as someone pointed

out to me once that -- If the worse thing that ever happens to you is a melt concrete interaction in a severe accident you're in really good shape.

MEMBER CORRADINI: Thank you, Dr. Powers. I was guessing the LRF would not change. But I was curious if this was considered. Because it came up in our certifications a similar sort of question.

MEMBER POWERS: Yes, I mean the things experimentally when we looked at core retention devices the problem is that the kind of a fool's game is if they're passive then what you assure is that your core melt sits at the melting point of whatever your refractory is. And that's typically very hot.

And that's fine until you go through it and it does hit the structural concrete. Then it's an inspirational event meant for converting pagans into Christians very quickly.

MEMBER CORRADINI: I won't --

MEMBER POWERS: It's not a passive system. It's an active system. So the failure you must be hypothesizing -- the failure I would hypothesize -- is something keeps it from cooling. But again with a large dry containment it's going to respond like a large dry containment. And it's probably less pressurization than you would get when your system

actually works because you're putting a lot of the heat into decomposing concrete.

MEMBER CORRADINI: Here's a question that's going through my mind and then you can store it away. You don't have to deal with it now which is if I'm subcooled water and I somehow lose active cooling can I cool it from below with saturated water or do I end up in this interesting situation and I start failing the retention device and have melt going into subcooled water? That's what I'm struck with in a confined space.

MEMBER REMPE: Is there --

MEMBER POWERS: That, too, is an event that will convert pagans into Christians.

MEMBER CORRADINI: That's the conversion event that I'm interested in.

MEMBER POWERS: You're talking about the beta experiment.

MEMBER REMPE: Isn't there an area and a maximum depth? And as long as you have enough area which I think they do in this containment that --

MEMBER POWERS: That's their idea to just spread it.

MEMBER REMPE: Yes. So I think this is just like adding even more to what they met the

surface area requirement which some of the designs --

MR. STACK: That's correct. Some of the designs -- criteria and the area is nominally about the same. Okay.

MEMBER CORRADINI: Okay. Thank you. I put it, asked it. I'm done.

MR. STACK: Next up and that will get us basically what's the answer. So when we looked at the quantitative results that came out of the PRA looking at core damage frequency and large release fraction and condition of containment failure probability what you saw is basically for the core damage frequency you saw that the shutdown events were about 10 percent of the total for the core damage frequency as well as for the LRF.

The numbers as far as these are concerned are the total --

MEMBER POWERS: I just have to point out that this does not demonstrate you've met the Commission's quantitative safety goal. This demonstrates that you've met the surrogate goals. You have not done the analysis to show that you've met the quantitative safety criteria that the Commission set out.

MEMBER BLEY: Just say yes. Just move on.

MR. STACK: Yes. And then finally on the conditional containment failure probability we're seeing 0.5 versus 0.1 for the safety goal. In general we have a robust design. We've informed -- I will mention this.

When you read the SAR and you look at the areas where we've looked at making upgrades, we've looked at different things from the PRA where it's informed it. But in large part that's looking at what was done in the U.S. What happened overseas years ago was looking at other aspects to the design that was brought to the United States that used PRA to add other features to the design. So it kind of went through two evolutions of PRA input as we got to the state we are in right now.

So the design was risk informed as it was developed. And we feel we have a very safe design and the PRA has provide useful insights.

MEMBER SKILLMAN: Tim, let me ask this question. I'm reading the status report for safety evaluation. And on page 115 are the words "internal fire events contribute to 33 percent of the CDF of power conditions. Point estimate and mean of the CDF are $1.8E^{-7}$ per year and $2.1E^{-7}$ for the year respectively."

I coupled that with some words back in chapter 9. "The EPR fire protection system provides assurance through defense-in-depth philosophy that the Commission's fire protection objectives are satisfied." Then there are a couple of sentences about how that is satisfied.

My question is this. What is the safety classification of the fire system in the EPR and would the CDF contribution be lower if the safety classification of the fire equipment was higher?

MR. STACK: Typically when you look at the PRA, the PRA isn't judging the safety classification.

MEMBER SKILLMAN: I know that. I'm making the two points independently. One is the comment about the incremental contribution of internal fire events and it's 33 percent of that number in your first column at power $5.3E^{-7}$. One-third of that is internal fire events, 1.8.

MR. STACK: Okay.

MEMBER SKILLMAN: When I read in your chapter 9 about your fire equipment, they are rosy words that have been used since the dawn of time. We've got fire pumps. We've got fire pipes. We've got nozzles and outlets. We've got spray headers. And we go down to Joe's Garage and buy commercial

grade equipment and we put in brass equipment. And that's our fire equipment.

What is the safety classification of the fire equipment in the EPR? Is there an upgrade that would give us or would give me confidence that at lease at some level here fire protection equipment in the EPR kind of looks like ECCS equipment? We can -- I'll have you look that up.

MR. STACK: When you're talking about this let me ask you. Are you most concerned about the detection or the suppression?

MEMBER SKILLMAN: Suppression. I want to put the fire out and I want to make sure that the equipment that's available does it.

MEMBER POWERS: You never get credit for putting the fire out without automatic equipment.

MR. STACK: We'll look up the safety class right now for you of the suppression system. I mean I'm sure it's either again -- Darrell, again it's either going to be nonsafety or NSAQs, one or the other. I suspect, Dennis, AQ. Both can be supplemented grade.

MEMBER POWERS: But the argument that you can put the fire out with suppression equipment probably never gets accepted. But you really have to

have somebody go in and look.

MEMBER SKILLMAN: Got to go fight it.

MEMBER POWERS: To get credit for putting the fire out. I mean that's just regulations are couched as though you only get credit for suppression not for actually terminating the event.

MR. STACK: Thank you.

MEMBER POWERS: I think it would be extremely difficult to persuade somebody that an automatic system would put the fire out and terminate the event without somebody actually going and looking. I mean I just don't know how you could ever persuade anybody of that. And the regulations are casted in that form that somebody has to go look.

MEMBER SKILLMAN: I'd reference page 115 of the status report please.

MEMBER POWERS: Thank you.

MR. STACK: So I'll ask. Any other outstanding questions?

MEMBER POWERS: Seeing none thank you very much for your 80,000 foot view.

MR. GARDNER: Tried to bring you down but -

MEMBER POWERS: At this point, we'll turn to the staff.

(Pause.)

MR. TESFAYE: Good morning again. I'm Getachew Tesfaye. I'm the Project Manager for EPR Design Certification. Before we get started with the summary of the three chapters that are under review today I'd like to make a correction that was included in the March 15 ACRS letter. I believe that was a question regarding topical report for describing the skilled experiment that supports the assumption of normal flow rate.

Actually there is no such topical report. What the staff did was audit the calculation with respect to that and I'd like Dr. Shanlai Lu to explain what they have done.

DR. LU: Okay. Shanlai Lu from Reactor Systems and Lead Reviewer on EPR. I think as a calculation that the particular report was audited by the staff three years ago and the testing report of the flow distribution and demonstrated that we can achieve uniform flow. It does not mean perfect uniform flow. But it has some very good uniform for the flow.

And the uncertainty of that testing was the fact that into the topical report considered as part of the uncertainty and as DNBR based on that

algorithm here. So that's the technical report.

We did ask for -- We did our initial REI after we received the letter from ACRS and then we plan to get that information for you to take a look. And that's -- and we plan to come back to answer the questions of the three loop operation plus the uniform flow distribution consideration as part of SPND operation there in the algorithm there. I think that's the plan. I think it will be sometime next year when we can come back.

MR. TESFAYE: Yes. That was our open item in this review. And again there is no topical report. But if you'd like to take a look at the calculations that supported those assumptions, we can make arrangements for you to review those calcs.

All right. With that I guess -- Thank you, Shanlai.

On the slide I have not three but four staff members to support this presentation. We'll concentrate on highlighting confirmatory and independent analysis done by the staff in support of the safety finding for chapters 3, 9, 14 and 19.

I'll just go through my normal routine of showing the major milestones. Here again the significant ones are the completion of phase one which

was back in 2009 and completion of phase two which is this year. And we're going to complete firstly officially in July when we respond to your letter addressing these four chapters that are presented today.

This is again a summary of our different phases. Again phase three will be completed once we respond to the ACRS letters on the remaining four chapters.

And we are currently in the process of rebaselining the schedule based on the open item response schedule provided by the Applicant, AREVA. And we expect this rebaseline schedule to be issued by the end of May.

Review strategy, we've gone through this in the past. Just in summary, there are several preapplication activities including some topical reports and the presentation by the Applicant on unique design features. And I have had several interactions with the Applicant through audits, teleconferences and public meetings. And we are also using for the first time electronic RAI system which facilitated the flow of information between the Applicant and the Staff.

And the last one which was critical which

is phase discipline as we said in the past we don't sit on it. We open things until we make sure that the open items -- have a clear path forward for the open items. So all the remaining open items I think officially we have close to 520 open items for all 19 chapters. And every one of them we are confident there is clear path forward for resolution.

Now I come to chapter three and here we have a support analysis that will be presented by the staff. And we have 68 open items. A significant open item in this chapter is the detailed analysis on the critical sections. And that is supposed to be submitted to staff in 2013.

With that, I will introduce Eric. He doesn't have a seat here, but he'll introduce his contractor to present the confirmatory analysis on leak before break.

MR. REICHELT: Thank you, Getachew. Good morning. My name is Eric Reichelt. And I'm a Senior Materials Engineer in the Office of New Reactors in the Division of Engineering. I'm the NRC technical reviewer for Section 3.6.3, Leak Before Break Design, for the EPR DCD.

In February, 2012, the staff provided a presentation to the ACR Subcommittee on the staff's

LBB review and confirmatory analysis. We are pleased to be here before the ACRS Full Committee to discuss once again staff's review on leak before break.

I'd like to give you a brief overview and introduction on work that was performed for this section. The use of leak before break applications has been utilized in previous design certification applications including their system 80+, AP6000 and the initial AP1000 Rev 15 BCD.

It should be pointed out that leak before break is part of a piping design acceptance criteria and is based on preliminary piping design and the use of the bounding leak before break parameters. The LBB approach for new reactors is to use the bounding limits established during the design certification phase and to verify the final as-built design during the construction phase using ITAAC. And this approach has been approved by the Commission in its SRM for SECY 93-087 and which will be discussed by our contractor in more detail.

The technical review was performed by Engineering Mechanics Corporation of Columbus, Ohio otherwise known to us to Emc2.

At this time, I would like to turn the presentation over to Dr. Prabhat Krishnaswami to

discuss the technical review confirmatory analysis and conclusions for section 3.6.3. In addition, we also have Mr. Keith Wichman of Emc2 and David Terao, the Branch Chief of the Component Integrity Branch for additional technical support.

Prabhat.

DR. KRISHNASWAMI: Good morning, everybody. I'm Prabhat Krishnaswami. And we are contractor to the NRC Engineering Mechanics Corporation of Columbus and we did the confirmatory analysis on section 3.6.3 on leak before break.

The regulatory requirements for leak before break come from the general design criteria for in 10 CFR Part 50. And that essentially involves we had to confirm that analysis that was used to exclude from the design basis the dynamic effects associated postulated pipe ruptures.

The LBB analysis as defined is quite conservative and it has essentially two safety margins associated with the procedure. It has a safety margin of ten on the leak rate. That is if you have a 0.5 gallons per minute leak detection system. The analysis uses five gallons per minute for LBB analysis and a factor of two on the crack size.

In relation to a question that Dr. Shack

asked earlier today, there is sufficient information in the FSAR for us to do a detailed and confirmatory analysis on the three lines, the surge line, the main coolant loop and the steam line general properties, loads and so on to do the confirmatory analysis. Next slide please.

The three parts of the analysis involve the three bullets there. One is to review the indirect sources of degradation in the pipe and that's the first bullet there to make sure that there is an extremely low probability of cause of pipe rupture.

The second bullet involved a very detailed review of the elastic plastic fracture mechanics procedure that was presented in the FSAR that we did.

And the third bullet involves the two parts of LBB which is the leak rate confirmation, the leak rate versus moment curve, and the second part or the flaw stability analysis. And I'll show that in the next couple of slides in detail.

This is the first part of our confirmatory analysis. It's for the surge line. It's in a critical location, the surge line. What is shown here is a moment versus a crack length curve for a given leak rate of five gallons per minute. So for a given leak rate of five gallons per minute there's a

combination of moment and crack length that gives you that leak rate.

AREVA used their own proprietary software called KRAKFLO to do their analysis of moment versus crack length. And the red triangle there shows their results.

SQUIRT is a software code that was developed by the NRC and the contractors in the late `80s. It's been developed and used. And we use the SQUIRT code to confirm their results. And what is shown here is both our results as well as AREVA's results using SQUIRT. As you can tell we were able to confirm the leak, the moment versus crack length curve, very accurately.

The second part of the LBB involves the flaw stability analysis. The way AREVA approached it is to present the flaw stability analysis as an ALL diagram which is the allowable load limit diagram for the surge line that is shown here.

For this given case, there is a minimum moment which is the X axis and the maximum moment on the Y axis. The minimum moment is essentially the design moment and the straight line is a one-to-one line.

The other line there is the bounding line

that shows the conservative analysis with the two safety factors, safety factor of leak rate and two on crack size for various values of the applied moment plus the axial load.

Emc2 used the same data input and independently confirmed those lines, the bounding lines. And our results are showing there with the yellow dots on the calculation.

The area that is bounded between the straight line and the curved line is what is an allowable -- That's the region that is safe with the allowable safety factors. And we confirmed that for this case and other cases that the design is within that bound.

Essentially the two parts we were able to confirm very correctly. The first bullet there says that we concluded that the design specific and piping system basis meets the acceptance criteria.

And there is one open item relating to the coolant loop that we are just about complete the review. You will receive the information requested in the RAI and we're about to conclude and finish that process. That's all I have.

MR. TESFAYE: Thank you. That concludes our chapter three presentation. Unless you have other

questions to the staff I'll move onto chapter nine. Here in chapter nine we haven't done any independent analysis or confirmatory analysis.

There was a total of 63 open items in chapter nine. And the significant ones involve the penetration that was described by AREVA today, the seismic analysis of the penetration. And that's an open item that will be addressed in phase four and phase five of the review.

And again we have staff available if you have any questions on the safety violation we have performed.

MEMBER SKILLMAN: I do. I have one question that I would like to ask and it has to do with the statement that is made relative to concentration of boron in the pool. Let me read the statement and, Getachew, please choose who might be able to respond to this. Okay.

This is what is written on page 71 of the status report. "A concentration of 500 ppm of natural boron will maintain the fuel storage rack K effective less than 0.95 during normal conditions and the fuel storage rack K effective will be less than 0.95 in the limiting credible abnormal condition with a concentration of at least 1100 ppm of natural boron.

These concentrations are not converted to the concentrations necessary with the use of enriched boron."

I am confused with that set of statements. One communicates 500 ppm with a K effective of 0.95 or less. And the other statement is 1100 ppm with the same K effective. Might someone be able to clarify?

MR. TESFAYE: Staff members present, do you have an answer? We'll get back to you on that question.

MEMBER SKILLMAN: Thank you.

MR. TESFAYE: Thank you. Any other questions on chapter nine?

(No verbal response.)

Chapter 14, of course, we don't have any confirmatory answers for chapter 14. But we've taken a couple of questions from the Subcommittee presentation that we'd like to address today and I have David Jaffe from the Licensing Branch I to address those two questions.

Before I do that, there are a total of 33 open items. And the significant open items involves the rewriting of the ITAAC to make it more respectable. And we hope to complete that early next year.

David.

MR. JAFFE: Very good. Good afternoon. My name is David Jaffe. I'm a project manager for Chapter 14, Verification Programs. We presented our safety evaluation with open items to the Subcommittee in February. And Vice Chairman Stetkar had two questions for us.

The first question relates to Test Abstract 161 which is one of the hot functional tests that confirms among other things the ability of the standstill seal. How did I do? Okay. Great. To limit reactor coolant system leakage in the event that the other seals fail.

Just to put this in context, chapter 5 describes the reactor coolant pump seals as having the three operational seals and then a fourth standstill seal that's nitrogen pressure-activated and provides metal to metal contact to limit reactor coolant loss in the event that the other seals fail.

As far as the Station Blackout is concerned, chapter eight, specifically 8.4, contains the SBO time line. And in that in two minutes the following the SBO the reactor coolant pump seals degrade and fail due to loss of CVCS leak by cooling and also thermal barrier cooling resulting in leakage

--

MEMBER RAY: I'd just direct your attention of everybody to what you just said. It's what I always want to draw attention to to make sure nobody's thoughts are wandering when you say what you just did.

MEMBER BROWN: In other words, they break.

MEMBER RAY: What?

MEMBER BROWN: They break.

CHAIRMAN ARMIJO: And they don't last long.

MEMBER RAY: In two minutes.

MEMBER BROWN: Yes, very quickly.

MEMBER RAY: As opposed to other representations we sometimes hear.

MEMBER BROWN: Yes.

MR. JAFFE: These are elastomers, right. And they very quickly fail. And there's an estimated leakage of about 25 gpm per pump. So somewhat over 100 gpm.

And then within 15 minutes or so the standstill seal is activated and reduces the leakage to about 0.5 gpm per pump for an overall RCS leakage rate of about 13 gpm.

So one of the goals of this particular

test is to see how those seals, the standstill seals, would perform.

MR. TESFAYE: That was very good.

MR. JAFFE: I'm doing better.

MR. TESFAYE: Yes.

MR. JAFFE: We're doing better.

CHAIRMAN ARMIJO: Just want to make sure I hear you right. When these standstill seals are activated, it reduces the leakage from 25 gpm to 13. Is that what I heard?

MR. JAFFE: To 0.5.

CHAIRMAN ARMIJO: 0.5, okay.

MR. JAFFE: Per pump.

CHAIRMAN ARMIJO: Per pump. So they're very -- They work.

MR. JAFFE: Yes, you have nitrogen pressure behind it and it forces it into position and you get good metal-to-metal contact.

CHAIRMAN ARMIJO: You don't want to start the pump up with --

MR. JAFFE: Yes, that's right. That's why it's standstill.

MEMBER BROWN: If it's 0.5 times four is two. How do you get 13?

MR. JAFFE: From other sources.

MEMBER BROWN: Okay. What are the other sources? Just I need to be enlightened.

MR. JAFFE: I don't think I'm prepared to answer that.

MEMBER BROWN: Okay. If there are other parts of the plant that leak, I thought just the pump seals were the big leak sources.

MEMBER SIEBER: Pump seals is the big one.

MEMBER BROWN: Yes.

MEMBER SIEBER: Other things leak too, packing glands and so forth. There are certain assumptions.

MEMBER BROWN: I'm sorry. My experience is totally welded plants.

MEMBER SHACK: And he normally would think a PWR is leaking like 1 gpm.

MEMBER BROWN: That just seemed kind of high. If the pumps are the biggest source, that's a lot of other sources to come up to 11 gpm.

MEMBER SIEBER: A conservative analysis.

MR. STACK: This is Tim Stack from AREVA. When you look at the analysis it's just tech spec leakage. One gpm of unidentified. Ten gpm of identified leakage. So we're assuming we're at tech spec limits and everything else leaking at its limits.

And this is just looking at the balance for the RCPs.

MR. JAFFE: Non-specific tech specs.

MR. STACK: Yes, it's just up to the tech spec limits.

MR. JAFFE: Right. Thank you.

MEMBER BROWN: Thank you.

MR. JAFFE: You're welcome.

Okay. In any event --

MEMBER SKILLMAN: Let me ask a question please, David.

MR. JAFFE: Yes.

MEMBER SKILLMAN: You mentioned the words "elastomer seals." And I'm not sure you meant that. My experience is that these are silicon nitride or aluminum oxide. Certainly not elastomer.

MR. JAFFE: Right. Thank you.

MEMBER SKILLMAN: Yes, sir. Thank you.

MR. JAFFE: Okay. The acceptance criteria that we're specifically referring to in test 161 is that the RCPs can be secured one at a time at hot zero power conditions and the reactor coolant pump seal package including the standstill seal can be verified to limit RCS leakage within the design limits. That's the objective.

And as far as the question is concerned we

were asked as to whether or not that was associated with section 9.3.4.4.1 which is the section that describes the CVCS flow for seal cooling. And we found that the best answer to that is the design criteria from 8.4 and specifically the SBO progression.

MEMBER STETKAR: I think one of the questions though is is the test actually going to verify that they maintain that leakage or less but with the eight hour nominal Station Blackout time window. I mean maintaining it for 15 seconds is one thing. Maintaining it for eight hours is something different.

MR. JAFFE: All we have at this point and all that we reviewed is an abstract which is a summary of what that will look like. And we would have to wait for the full blown test procedure to get a handle on that.

MEMBER STETKAR: Okay.

MEMBER BROWN: Is this a vendor test? This is not done in the plant, is it? Is this not part of the initial test program?

MR. JAFFE: Yes, it is.

MEMBER BROWN: So we actually go blow the seals out and make them fail so that we can test them.

MR. JAFFE: No. I wouldn't think so. As I indicated, I don't have the details of exactly how that this will be accomplished.

CHAIRMAN ARMIJO: But that test can be run without damaging the seals?

MR. JAFFE: Yes, the way they describe it to us is that they're secured. The pumps are secured one at a time at hot zero power and it's confirmed that the standstill seals limit leakage. It's the general rule right now. We don't have the specific procedure of how that would be accomplished.

CHAIRMAN ARMIJO: My question is without damaging the other seals.

MR. JAFFE: I'm sure. That would be a very costly demonstration.

CHAIRMAN ARMIJO: But we'll have to wait and see. Yes, it would be.

MR. JAFFE: The second question we got from Vice Chairman Stetkar had to do with the severe accident ITAAC and specifically with regard to the development of those severe accident ITAAC is there a consistent process for developing the list of equipment to be addressed by the ITAAC and how do you determine what equipment should be on that list.

And we reviewed that. And we went back to

basics. We took a look at Standard Review Plan 14.3 and in there is a specific process. And it does lead one to first review the Tier 2 analysis including the analysis of fire, floods and severe accidents and shutdown risk. And then to look at what equipment is necessary to ameliorate the consequences of those events.

And we've taken some quotes directly from the SRP. And we're fairly confident that there is a detailed process for that. And you can see the severe accident ITAAC in Section 2.3 of Tier 1. Thank you.

MR. TESFAYE: Thank you, Dave. If there are no other questions on chapter 14 I'm going to move onto chapter 19, PRA and Severe Accidents. Here we have a total of 15 open items and the most significant one involve the PRA updates which affects chapter 19 and chapter 17. And we expect a response to those open items soon.

And we also have confirmatory analysis done to support severe accident. And Anne-Marie Grady is here to give us a high level presentation of that confirmatory analysis. And again, I'm sorry. For the severe accident evaluation we have five open items.

MS. GRADY: Good afternoon. I'm Anne-Marie Grady from DSRA. And I'd like to go over what

we did in our confirmatory analysis for severe accident.

As you probably all know because you've read the SE, AREVA has analyzed severe accidents using the MAAP analysis program version 4.0.7. They modeled relevant scenarios. That is those that each scenario that has a CDF of greater than E^{-8}.

And those particulars were 11 scenarios amount to five of them. One is loss of outside power with seal LOCA. One is a loss of offsite power with a high pressure end state. Another is a loss of offsite power with low pressure end state. A fourth is loss of balance of plant. And the fifth is a small LOCA. So those are the relevant scenarios they've analyzed. They describe how they came up with that in a technical report that we reviewed in 2007-2008 and we agreed with that methodology.

Now in our confirmatory calculation we used MELCOR and we also analyzed those five relevant scenarios. Excuse me. MELCOR 1.8.6. And we did a few additional scenarios which are basically variations on the relevant scenarios that AREVA modeled.

A couple of the additional scenarios that we looked at were the loss of offsite power with low

pressure end state with containment isolation failure. A second one was steam line break inside containment and another was instrument tube failure.

Now to make sure that in order to accept the five relevant scenarios and the others we in our confirmatory calculation looked at the five frequently dominated initiators. We considered all of those.

We additionally considered the five scenarios with the dominant cut sets. We looked at the highest frequency fission product release categories and the contributors to those. And then we looked at the highest frequency contributors to LRF internal events and satisfied ourselves that with the relevant scenarios and the variations on them that we had covered the important scenarios for severe accidents.

MEMBER STETKAR: Anne-Marie, you don't and we're running short on time.

MS. GRADY: I'm sorry.

MEMBER STETKAR: We're running short on time so I'll try to keep this short. Did you look at any scenarios that might be let's call it interesting but not dominant to see whether or not there were any optimums in their analyses that they'd done?

MS. GRADY: Okay. I don't know the answer

to that.

MEMBER STETKAR: Okay. Thanks.

MS. GRADY: Would you like further elaboration?

MEMBER STETKAR: No.

MS. GRADY: Because the severe accident -- the safety evaluation analysis was done by Dr. Ed Fuller who was in DSRA at the time. And I am now taking over and closing out his open items and reviewing the reanalysis that's being done by AREVA. But Dr. Fuller perhaps has something to add to your question.

DR. FULLER: Yes, I'm Ed Fuller from now the Office of Research. I'm Senior Technical Advisor for Severe Accidents. At the time when we were doing the technical review the idea of the confirmatory assessment was to look at the scenarios that would most likely contribute to risk in severe accidents.

And when AREVA did their analyses they had these five general categories that Anne-Marie just went through. We did some variations on some of those and by we I mean it's not just the Office of New Reactors. The work was done by the Office of Research in response to a need that we had. And they had a contractor do the work.

What we did was we looked at what came in, saw what the MELCOR results were compared to the MAAP results. And what we saw was we had generally very good agreement among all the scenarios, particularly for the severe accident progression part. Agreement was not so great for the source term. So it was we thought acceptable enough.

Along the course of the way there were additional issues that arose that would fall into the category of those identified by Dr. Stetkar, things that were interesting but not necessarily relevant. We looked at those in two ways. We did some sensitivities on the five cases so that we could cover some of those.

And, for example, a question was raised what happens if you didn't have any operability of the core melt stabilization system and severe accident heat removal system. So we ran a MELCOR case and AREVA had run the MAAP case in response to an RAI we had asked. We ran the case to see what would happen and there were no surprises. You failed the base, but we ran it.

And we ran -- When the instrument tube failure issue came up that was identified by Bob Henry we asked AREVA to run those cases with MAAP and we

confirmed them with MELCOR. And we had them look more carefully at induced steam generator tube rupture and ran confirmatory cases on induced steam generator tube rupture.

So we probably didn't cover everything, but we covered --

MEMBER STETKAR: A lot more than those postulated.

DR. FULLER: -- what we considered to be the most important.

MEMBER STETKAR: Good. Thank you.

MS. GRADY: After we had our confirmatory calc done we compared the results and we got as Dr. Fuller just said generally good agreement on various figures of merit such as time to melt plug failure, debris temperature, before melt plug failure.

The percent debris retention in the reactor pit was one difference that we identified. MAAP didn't predict that. MELCOR predicted approximately five percent retaining. So we have an outstanding RAI which is an open item on that issue. But in general we've had good agreement with the results.

The open items we have five open items. Since we wrote the SER, we've basically looked at

several of them. And we have satisfied ourselves based on the responses to RAIs that most of them we are in agreement with now.

The ones that we are not is there is five percent left in the reactor vessel. We are waiting for results on that.

We are looking at the results of steam generator tube rupture. That's an open item that we're awaiting results from AREVA. And also the design change in the SAHRS/IRWST which we've asked the question about but don't have results yet.

Which gets me to my last point which really need to have more opportunity to ask questions on this. Last October AREVA met with us and told us that they have revised our severe accident analysis. They have done it for various reasons. They have made various changes at that time.

They gave us a flavor for the preliminary results. They provided us with documentation as to how they went about it and what the changes would be in the model.

Based on discussion, the preliminary results this is all oral or through an audit. We have written RAIs asking exactly what they did and what that really does mean now for the severe accident. And

we are awaiting the results of that.

But that RAI is already in the system. I'm sure they're already thinking about it if not working on it. And we expect to be discussing this again.

I'm sorry. I forgot a major point. They also revised their PRA. And since they've revised their PRA, anything that came out of that will absolutely be reflected in the reanalysis of the severe accident.

MR. TESFAYE: Thank you, Anne-Marie. And again to stress what Anne-Marie said, the open items seen in this SECY evaluation we issued is not the only open items. We issued a open items in phase four. All of them will be closed in phase four and will be presented how they were closed in phase five of our review.

Another point I'd like to make is even though I mentioned there are 520 open items, the majority of those open items have already been closed. We are in phase four of the review as we do phase three. So I would say about less than 150 open items still left not closed.

That's all we have for chapter 19 unless you have any other questions. I would like to thank

you for giving us this opportunity to review this chapter by chapter. Sometimes our chapter combinations and we've gone through them without any major crisis. So appreciate that and we look forward to your letter on these four chapters.

MEMBER POWERS: Again, the only reason it works is because of the discipline you and your staff exercise in bringing the material to us.

I will comment that in the course of examining this last batch of materials we did identify an issue that I think needs consideration. It is the way the staff does its environmental qualification of equipment. It really is not pertinent to this particular application. It is a generic issue where they separate out radiolytic and thermal and humidity effects and treat them separately.

That is as it's specified in the Reg. Guide. The staff reviewing this and the Applicant had done it following the Regulatory Guide. It's the Regulatory Guide in particular that I think we need to at some point understand better why it is separated. So we need to put that on the agenda.

What they've done is exactly as it is prescribed. But the question is should it be done that way. For this particular application, we need to

understand better what kinds of cable insulation they're using and how that affects the post LOCA environment and the acidity.

MS. GRADY: And we have an RAI to that affect.

MEMBER POWERS: And that will get results. Do any of the members have additional questions?

MEMBER ABDEL-KHALIK: I'd like to just point out to a possible inconsistency between what we heard today and what we heard from the COL Applicant regarding the use of mixed cores. And I believe our staff should examine the record for both meetings and see if there is indeed an inconsistency between the statements.

MEMBER POWERS: There does seem to be a little confusion on that. But I think it was my impression and correct me if I'm wrong that we got the definitive word here today that they are not designing for mixed cores, not applying for certification with the mixed cores and that indeed the staff has put a restriction that they are not certifying the design for mixed cores. That's my understanding to be the definitive word now.

CHAIRMAN ARMIJO: We never design reactors when we first started designing reactors for mixed

cores. You designed for GE fuel. But the plants were capable and other fuel suppliers learned how to design their fuel to meet NRC's regulations. So unless there is something fundamental about the equipment, the mechanical design.

MEMBER ABDEL-KHALIK: Yes, there is. That's why.

CHAIRMAN ARMIJO: Well, I think, Said, it would be good to tell them specifically what you're worried about about the equipment because that will help them focus on it.

MEMBER ABDEL-KHALIK: We pointed that out at the last meeting I believe. So I think what we --

CHAIRMAN ARMIJO: We would want to remind people what that is because I certainly don't remember it.

MEMBER POWERS: I think it's been confusing enough between the Subcommittee meeting and the final Committee meeting that I would propose in the letter to acknowledge our understanding which is exactly as I said it to be. And if that's not the case then somebody ought to correct our misunderstanding. Other than that I have nothing. I again say that the phase discipline has been essential. The discipline with which presentations

have been presented to both the Committee and the Subcommittee are admirable. And excellent presentations.

I appreciate very much the continuously summarizing for us where we stand. That helps a lot. And with that I'll turn it to you, Mr. Chairman.

CHAIRMAN ARMIJO: Okay. Well, we're running behind schedule. We're going to take a break for lunch and we're going to reconvene for SOARCA at 1:15 p.m. Off the record.

(Off the record at 1:15 p.m.)

A-F-T-E-R-N-O-O-N S-E-S-S-I-O-N

(1:14 p.m.)

CHAIRMAN ARMIJO: All right. We are ready to start again. The topic is SOARCA, and Dr. Shack will lead us through this.

MEMBER POWERS: Mr. Chairman, before we begin, I would like the Committee to know that I am recusing myself because of a corporate conflict here. I am not a -- I don't work on SOARCA, I haven't had any involvement in it, but because Sandia did some minor fraction of the work, I think it best I --

(Laughter.)

-- not comment either positively or negatively about this work.

CHAIRMAN ARMIJO: Okay. Thank you very much, Dana. Bill?

MEMBER SHACK: SOARCA, again, is the State-of-the-Art Reactor Consequence Analysis Project. The major accomplishment since the last time we have reviewed the SOARCA program a few -- a while ago has been the development of an uncertainty analysis.

And I think we will be hard-pressed to do it justice today. We had a Subcommittee meeting back on April 25th where we had the data work on it, but we will try to give a flavor of what they have done to

address some of the uncertainties, which are obviously large when you are dealing with something like a severe reactor accident.

And with that, I will turn it over to Jason or Tina, whoever is going to start.

MR. SCHAPEROW: Yes. We have two short presentations today. The first one is an overview of our baseline analysis work that we started back in the 2006 timeframe, and we have now finished. And Tina has a dozen or so slides to go through -- some additional work that we are doing to look at uncertainty, what we are calling our uncertainty analysis.

As Bill mentioned, it's a lot of work. I'm going to do what I can -- a half a dozen or so slides -- to kind of go over the whole thing. But like I say, a lot of people worked on this, a lot of folks out at Sandia -- Randy Gauntt, Casey Wagner, Kyle Ross, Mark Leonard, a lot of people you've heard mentioned over the years; also at the NRC, Charlie Tinkler, myself, Marty Stutzke, Rick Sherry, a huge project.

And I would just like to -- I'm glad that you are all here. Actually, I am glad that you all lived long enough to see the end of this.

(Laughter.)

It's not over yet.

MEMBER SHACK: We were expecting to have a hundred reactors by this time.

(Laughter.)

MR. SCHAPEROW: Well, we wanted to be really, really, really detailed. So, and of course we had a hard act to follow. I mean, we had -- in the '90s the NRC did a lot of work. With SCDAT/RELAP we did a lot of very detailed analysis for station blackouts that I'm sure you have seen over the years. So that is -- we tried to move it a step forward.

Now, we have also thrown in the fission products, you know, and the containment and a lot of other -- a lot of fission product-related phenomena in particular. That has really been the focus of our project. Not that all of the other stuff wasn't important, and we did build on all of the earlier SCDAP work done out of INEL.

Okay. Just to start off, I've got a couple of slides on objectives, approach, and conclusions. Objectives -- our primary, overarching objective was to develop a body of knowledge on the realistic -- emphasis "realistic" -- outcomes of severe reactor accidents.

Some supporting objectives that we had, we did have earlier studies out there such as the 1982 siting study, which has been repeatedly cited, and we wanted to be able to update those numbers.

Another objective was to incorporate plant changes not reflected in earlier assessments. You know, since perhaps the time of NUREG-1150, a lot of improvements have been made to the reactors over the last let's say 20 years, and we tried to reflect that.

Most recently, post-9/11 measures, which we sometimes call B.5.b, we wanted to evaluate those measures through SOARCA, as well as incorporate all of the modeling improvements in both MELCOR and MACCS, emphasis "MELCOR." We've done a lot with MELCOR for the last 20 years.

And, finally, we want to be able to use SOARCA to enable us to communicate about severe accidents with the various stakeholders, including other federal agencies, the public, and licensees as well.

Approach -- we are different from earlier studies, severe accidents, in a number of ways. Perhaps first and foremost was our focus on just select scenarios. Because of our attempt to be as realistic as possible and as detailed as possible, it

wasn't possible -- it wasn't -- we felt that it was appropriate to focus on the more important scenarios, and for that we turned to all of the PRAs that have been done over the last number of years to help us focus on what really should -- what is really important, what should we be analyzing.

So of course we came out with a bunch of station blackout accidents, a couple of bypass accidents.

With regard to details, as I mentioned, of course we have been doing a lot of SCDAP/RELAP analyses over the years for station blackouts, particularly to look at the steam generator tube integrity issue. But this time we went further. We took -- we used the MELCOR model, which is a more recent code, and we used that. That also includes all of the fission product phenomena that are needed for consequence analysis.

So we used MELCOR as an integrated tool. MELCOR integrates all the phenomenology, the physics, the thermodynamics. It integrates the operator responses. Through input, we can tell the code when to turn pumps on and off. It also incorporates system response. If the hot leg ruptures, we can rupture the hot leg, introduce the rupture, and then we will

depressurize the system. So it is quite integrated.

We incorporated in MELCOR the recent physical experiments. Typical example is PHEBUS you always hear a lot about, that we have done a lot of benchmarking of MELCOR against PHEBUS. The ARTIST test, we used those insights to -- for our steam generator modeling, and some of the tests from back about 10 years ago or so back at Sandia on containments, how containments fail. We have that in our model as well.

We also had this issue about seismic impacts. The ACRS pointed this out early on, that, hey, if you're doing seismic-induced station blackouts you really need to look at how the earthquake is going to affect the evacuation. And we try to -- we factored that in as well.

And finally, and perhaps most controversial, is what to do about latent cancer risk estimates. The NRC has -- and just about everybody I guess relies very heavily on LNT models, linear threshold. We also used other -- a couple of variations on that with a threshold to see, well, what difference does it mean, all of this debate over thresholds.

Three slides with conclusions, very high

level. The first bullet here talks about the B.5.b measures. We ran our MELCOR calculations with everything -- EOPs, SAMGs, and B.5.b. And we found that, as a result, these accidents could be mitigated in many cases to prevent any core damage at all.

But we also ran the MELCOR calculations without the new B.5.b equipment and procedures and -- to see, well, how would this progress -- how these station blackouts would progress if they didn't have these diesel-driven pumps that could inject water.

And so we ended up with kind of a typical severe accident, with core damage, core degradation, lower head failure, and the rest. We found that these accidents progressed more slowly and released smaller amounts of radiation than our earlier studies.

MEMBER CORRADINI: Can I just ask a question? There have been some reports in the popular press that indicated that SOARCA did not do this. But the more I read it, is it just that they are not seeing the unmitigated accidents? Because I was able to pick up the difference, and it seems to me that is an important difference -- that you basically looked at the models, or the linking of all of the models, in an unmitigated sequence. Right? And you actually saw a big difference in terms of consequences.

MR. SCHAPEROW: That's correct. Some of the controversy has been at further distances out from the plant, like zero to 15 miles, when we do those kinds of risk numbers, risk calculations, that the -- using the LNT model, I think our predictions were about a factor of three less than the earlier study, the siting the study, and that was pointed out as well.

You know, factor of three, you know, this is severe accident analysis, big deal. As far as that one commenter was concerned, those numbers were about the same.

But when you look close in, within the EPZ we see a huge difference. It feels like a factor of 20 or some, you know, decade or more in consequences.

MEMBER CORRADINI: Okay. Thank you.

MR. SCHAPEROW: So that is -- and also, even a factor of three can be a big deal if all you are dealing with is is a return. You know, a lot of that risk is from people returning.

MEMBER CORRADINI: The reason I ask is that when I read not the report, but when I read some of the reports from certain places, it seems to miss the fact that the unmitigated -- as you pointed out, the unmitigated accident scenarios, just with the

change in the modeling, shows a big difference.

MR. SCHAPEROW: Yes, yes. We are getting much smaller -- that is my next slide is we have much smaller releases than the siting study, and a lot of our other -- we don't have anything that one might consider maybe a large early release. Our releases are much smaller, and this is showing up in the offsite consequence calculation.

So these are the releases from the cases without the B.5.b equipment and procedures.

MEMBER CORRADINI: Can I try one other question, just so -- in some sense? So I am going to assume the uncertainty study is going to expose this. But if I started to back up and say, "What things about the integrated linked analysis doesn't give you an SST1 source term?" is it obvious the things that are there, or is it just a multitude of small things? Do you know what I'm asking?

MR. SCHAPEROW: Some of the things that lead you to an SST1 or large early release kind of source term are these phenomenological issues that have been raised in earlier PRAs, such as NUREG-1150. One of the issues is high pressure melt ejection leading to direct containment heating.

You know, we did a lot of research on

that, and the ACRS reviewed it over -- I guess in the '90s, and concluded that that really was not going to happen. We weren't going to see any direct containment heating.

So that is one of the reasons we are smaller. The other big issue was alpha mode failure, the vessel head being launched through the containment roof. And, again, we did research on that to demonstrate that that wasn't realistic.

So a lot of this thing about, you know, large early releases versus non-early release I think was disposed of by those kinds of research projects over the years.

MEMBER CORRADINI: And just my final point is, and if I were to go look at the report, that pretty much there is a way to unravel that to actually see the reasoning.

MR. SCHAPEROW: We do discuss this in the report. There is a section dealing with some of the earlier large release mechanisms.

MEMBER CORRADINI: Okay.

MR. SCHAPEROW: Another thing on these two charts which show the iodine and cesium releases, another thing to note for these cases is that the releases are -- in addition to being smaller they are

delayed by a number of hours. Most of these releases don't start until between like 10 and 20 hours.

And that delay is important because that would provide additional time for operator actions to mitigate. You know, one would expect that if the operator had, you know, another 10 hours they could do a lot more.

MEMBER SKILLMAN: Is that delay or that time difference the result of containments stronger than had originally been analyzed?

MR. SCHAPEROW: For Surry, the delay is -- a lot of it is due to the containment, because a station blackout in Surry would lead to containment overpressure.

For Peach Bottom, the release is not perhaps as delayed, because we are seeing containment failure right after lower head failure, as a result of liner melt through.

A lot of the delay is just due to the better representation of the reactor. We've got all of the materials now accounted for, all of the structure, all of the steel, all of the fuel. It just takes longer for that stuff to heat up, so there's a lot more thermal mass.

For the PWRs, we account for the

recirculation of the steam and the hydrogen throughout the RCS. That distributes the heat. It's just -- things are just delayed because of the more detailed phenomenological modeling.

MEMBER SKILLMAN: Thank you.

MR. SCHAPEROW: And my final chart with overall conclusions of the study is a consequence chart for LNT, based on LNT modeling. This chart shows the predicted latent cancer fatality risk for the EPZ. We chose the EPZ because this is how we typically compare against the NRC safety goal. That is interpreted as within 10 miles of the reactor.

So these numbers are quite small with respect to the NRC safety goal, as you can see in the chart.

We also included these two green bars on the chart, which are the 1982 siting study for comparison. So those were also below the safety goal, but we are actually quite a ways below them as well.

We also included in SOARCA a peer review. The first -- we had five meetings of the Peer Review Committee. The first meeting was held in July of 2009, so this is -- and the last meeting was held in December of 2011, so about a two and a half year long peer review.

We did have a couple of breaks in there, one of which was the Fukushima accident. The whole project kind of ground to a halt for a little while, but we picked it back up and we finished the peer review.

The peer review was done by a collection of 11 independent experts. We had experts in all of the various areas we needed for analysis such as this. We had risk analysis/PRA experts. We had severe accident experts, emergency preparedness, and radiation health effects.

Also, I neglected to list that we also had an expert in the field of structural analysis. He reviewed our containment modeling, our earthquake type assumptions in that area.

The reviewers examined the whole project, soup to nuts. So we gave them all of the reports. We made lots of briefings to them, they asked lots of questions, and we responded with letters and meetings and such.

And the report -- they did identify some issues with the report. We tried to fix it up, fix up the study. They also -- some of the reviewers also noted the project's strengths as well, and we have endeavored to incorporate the review, and feedback

from the review, into the study.

About a year ago we had -- the Fukushima accident happened. And as a result, that caused us to scratch our heads a little bit, and a lot of people said, "Well, you know, how does this report compare to the Fukushima accident? You know, did you do a good job of predicting things? Did things line up right?"

The Fukushima accident was a station blackout, and of course that's what we did mostly. We did mostly station blackouts in SOARCA. The first thing that pops out at people is RCIC operation, and HPSI operation for that matter.

At the Fukushima reactors, they were able to run the RCIC and HPSI systems for a while, and they didn't have B.5.b procedures. But they knew about HPSI and RCIC, and they used it as best they could. They gerry-rigged it. They -- I understand they pulled batteries from cars, they got portable generators, they kind of -- I guess they kind of replicated in some respects some of the stuff that we have on B.5.b on an ad hoc basis.

And so our RCIC operation, for our mitigated case we ran RCIC for two days and then said, "Okay. After two days the accident is over." That was our B.5.b case. But without B.5.b, we only ran

RCIC for up to five hours. So we don't really have what they have, which was kind of in the middle. They ran it for two days, and then it -- they were unable to keep it going.

With regard to hydrogen, of course we all saw the explosions that blew the roof and some of the walls off of the reactor buildings at Fukushima. We do model hydrogen release and combustion in MELCOR. It is a relatively rough model, but it did -- you know, it did predict the release. It did predict the combustion.

We blew open doors, we blew open blowout panels on the top level of the building, and in some cases we blew out the roof, so that we didn't really -- for our SOARCA calculations with these hydrogen combustions, we didn't really see much deposition in the building. So we think that we were kind of aligned with Fukushima in that regard.

We did assume a 48-hour truncation. If the accident -- we assumed the accident would be over in 48 hours, something that Fukushima is a little different. For Unit 2, I think the accident didn't even get -- the release didn't even get started for 48 hours. So a little different thing happened there.

Multi-unit risk -- both of the plants we

analyzed were two-unit plants, Surry and Peach Bottom. We assumed the accident happened to a single unit. And as we saw in Japan, they had three units with meltdowns.

And, finally, there were issues with the spent fuel pool, whether that would also have a meltdown. We didn't consider that in SOARCA, but we are doing some work to look at that now under the spent fuel pool scoping study.

CHAIRMAN ARMIJO: Jason, you know, the -- at the Daini site they had the same seismic and tsunami, not as severe, as at the Daiichi site. And they were very effective in using their emergency operating procedures. I mean, they lost a whole bunch of equipment and power, but that might be a data point that you might want to use to look at --

MR. SCHAPEROW: Yes.

CHAIRMAN ARMIJO: -- for the mitigated situation. They were flooded, the emergency -- it was Unit 1 that really got badly flooded. You might want to take a look at that.

MR. SCHAPEROW: Okay. Thank you.

Okay. So where are we now? Well, we finished Peach Bottom and Surry, and we had it peer reviewed. And if you go back and look at the original

project documentation, we were intending to divide up all of the U.S. reactors into eight classes. We were going to do like a station blackout calculation for basically each of the classes, and we were going to run MACCS for each site.

We were going to take the station blackout for Surry and put that at North Anna with their population and their EP. We were going to run one calculation for each site for each of the eight types of plants.

Now that we've finished Peach Bottom and Surry, we have concluded that we don't -- this is not necessary. We think that what we have done so far is providing a body of knowledge, it provides updated understanding of severe accidents, and we think that the next logical step is the site Level 3 PRA. And that work is just beginning, and that will continue to add to our understanding of severe accidents.

MEMBER CORRADINI: Can I ask you a different question at this point? So are you -- so could I interpret this to say that you have a base methodology that you have proven out with two plants and selected scenarios? In other words, a Level 2/Level 3 connected methodology.

MR. SCHAPEROW: Yes, correct.

MEMBER CORRADINI: That methodology, though, when you exercise it with the uncertainty could have wings to it. That is, you might choose to do other things to check it. Where I'm going with this is, if you have a base methodology, which you then will insert into the Level 3 PRA, it is not simply a turn-the-crank methodology. They are going to need to do calculations apart from it, even in the Level 3 PRA space, because you will have uncertainties that you have to characterize. Is that a fair -- is that a fair statement?

MR. SCHAPEROW: Sure.

MEMBER CORRADINI: Okay. I mean, I have examples that I want to bring up, but I just want to make sure that I am understanding the basis. The basis is the methodology can then be, excuse me English, plugged and played within a Level 3 structure.

MR. SCHAPEROW: I think that some of the IPEs, at least the one that I saw for Surry, tried to do some of that. They have specific MAAP calculations for some of their important sequences. I'm hoping that we will move that way in our site Level 3 PRA. I'm not sure if -- I don't know if this has all been fully developed, but, you know, there is a whole

question about whether we should use expert elicitation to come up with release fractions or we can do -- use a code like MELCOR or MAAP to do that.

And I think at least from what I have seen, the industry is tending to do that for certain of the more risk-important sequences.

MEMBER CORRADINI: Which of those two, to just use MAAP calculations.

MR. SCHAPEROW: These MAAP calculations, like for ISLOCA -- everybody thinks ISLOCA is a big deal, so we'd better pull out MAAP and run a MAAP calc. Instead of going to the experts and asking them what they think their release fractions are, let's run a series of MAAP calculations to look at that. And they have.

Now, I don't think they have done anything quite like this where they varied input using random sampling to come up with --

MEMBER CORRADINI: Let me just give you my example why I have asked the question the way I did, which is, if I think about, can I most -- at the Subcommittee meeting when I guess it was Randy that showed the SOARCA calculations on station blackout short term and long term, and then just quickly made some comparison to Fukushima, the things that pop in

my head as examples of where the methodology would need augmentation from a modeling standpoint are things about in-vessel coolability with uncertainty of when you add water you might actually be coolable in-vessel, how the vessel fails, and ex-vessel coolability, which is to me more than just timing and more than just changing a coefficient or changing an exponent.

It is saying this model simply cannot do this; go use another model and see what it tells you relative to source term release. That's where I'm going with this.

MR. SCHAPEROW: Well, actually, I am kind of wondering if they are not going to use this MELCOR possibly for all three levels of the PRA. MELCOR is not limiting. This whole idea about, you know, when they add water, I mean, that is a Level 1 issue. And I think that is -- MELCOR does -- it cuts across all three levels in an integrated fashion, but the issue is, of course, what if you want to analyze, you know, 50 different sequences. You know, you are hard-pressed to use this -- such a detailed modeling in --

MEMBER CORRADINI: I'll say it again a different way just to make sure. So let's just run back to 1150 when there wasn't a pristine MELCOR.

There was an STP -- source term code package, there was MELCOR, there were people doing site calculations. My point is, there are certain physical processes that MELCOR cannot model. Therefore, you might have to do another model to estimate the source term rather than going to experts, but actually just have other ways of looking at the same physical processes.

Where I am going with this is I would expect in the Level 3 PRA those possibilities have to be considered, so you actually get a full range of the uncertainty.

MR. SCHAPEROW: Yes.

MEMBER CORRADINI: Okay. That's where I was going. Okay.

MEMBER REMPE: And the reason those kind of questions have come up, and will continue to come up probably through this meeting, is that you have said several times throughout the report, and I think in your presentations today, that you are trying to demonstrate a technique that can be used in the Level 3 PRA, and yet there was a limited uncertainty analysis done here for the SOARCA assessment.

And if you try and say, "Okay. We demonstrated it works, let's go run with it for the Level 3," I think there are some issues that may need

to be considered.

MR. SCHAPEROW: Yes. I'm not sure they decided what they are going to use for Level 2 and -- Level 2 and 3 part of that PRA project. I think that's all up in the air as far as I can tell, but there are some issues, and some of the issues -- you know, like corium spreading. You know, we've got a very crude and very simple model for corium spreading.

You know, that may be a big deal in a Level 3 PRA. They may have to do something to augment that, or maybe hydrogen mixing in the reactor building. That's another -- you know, there's one volume right now for that whole area from the top of the reactor building.

MEMBER CORRADINI: But, I mean, if I take a step back again -- this is just thinking out loud -- instead of using experts to actually determine source term, the usefulness of the experts, assuming there are experts, is to essentially ask the question, "What physical processes can't be done within the structured methodology, and, therefore, what are other things that are available? And what should you model?" And then, let the calculations speak for themselves, assuming they are appropriate calculations.

MS. GIBSON: We did that in a SOARCA

analysis when we found things that were important that we had to go back. And the ISLOCA was an example where we had to update the model so that we could better analyze those things. And there is efforts underway to do code comparisons as more data comes out of Fukushima --

MEMBER CORRADINI: Right.

MS. GIBSON: -- and identify things that we would -- information we would like to get out of Fukushima over the years when they start dismantling the plant, so that we can understand some of the phenomena, the bottom head, and things like that.

So I think we will continue to update the model as we run into questions like you are bringing up as we go through the Level 3 project, depending on what they are. If there is other tests out there, data, we can use, then we will either update the MELCOR model, or we will come up with some other way to model those phenomena.

MEMBER CORRADINI: Thank you very much.

MR. SCHAPEROW: Just for time, I will just jump right to the bottom if I could, for time reasons.

So we do see a little more work perhaps on the horizon for follow-on for SOARCA. One of the issues that was raised early on in the project was,

okay, you are doing Westinghouse with a large dry containment, but what's really interesting is an ice condenser, because those are weak. Those are weaker containments. If you get a station blackout, you could have a hydrogen combustion event, and you could have a much earlier release.

So we are going to be recommending some limited follow-on research, including analysis of an ice condenser plant. We actually started on one about three years ago, but we discontinued it because we really wanted to get Peach Bottom and Surry done, because we did want everybody to be alive at the end of the project. Just kidding.

And also, we are going to -- in addition to recommending -- in addition to recommending that, we are also going to provide the Commission with just an information package, say here is the SOARCA reports, you know, for your information. And that's where we are today.

The only other thing we had today was Tina was going to start talking about another piece of work that we have going on under the SOARCA program, the uncertainty analysis.

MEMBER REMPE: During the Subcommittee meeting, you did mention those reports for the plant-

specific analysis would be updated before they went to the Commissioners. Is that still the plan?

MR. SCHAPEROW: That's correct. We actually are making some small changes to the reports. We found errors with a few of the figures. One of the figures had the labels switched on two of the curves. Another figure, the one with the -- that chart that I showed today with the bars going up, one of those bars was too short. That was in the executive summary. That really hurt.

So we have gone back -- we tried to fix these things, because we really want --

MEMBER SHACK: Is that in the brochure, too?

MR. SCHAPEROW: Before we started SOARCA, I read a report. It was the one on steam generator tube risk. It was put out in 1998. And I went through that thing carefully, carefully. I want to -- because that was one of our important scenarios.

And I found a couple of mistakes in it, and I'm like, we don't want this for SOARCA. I worked on that report, too.

(Laughter.)

DR. GHOSH: With regard to the bar heights, the relative heights were correct. It's just

the absolute height was wrong. So the message is still the same, but that will be corrected when we put the reports out.

MR. SCHAPEROW: Yes. That's what the steam generator tube risk is reporting. People do go back and, you know, those are kind of -- maybe it will be overstating this, but they are a bit of a landmark study. People go back and look -- I've been looking at that for the last dozen or so years, other people that do severe accident research. So I'm hoping that people will look back at this report as well, and they will also be able to use it in that way.

VICE CHAIRMAN STETKAR: Jason, I wanted to bring this up. We brought it up in the Subcommittee meeting, and you mentioned at a high level that the SOARCA report looks at, you know, credit for mitigation and then compares unmitigated sequences.

But, indeed, SOARCA takes credit for a subset of operator actions and presumes that they are guaranteed successful.

MR. SCHAPEROW: That's correct. And --

VICE CHAIRMAN STETKAR: And they are not considered part of the mitigated or unmitigated. They are wired into the model.

MR. SCHAPEROW: The term "mitigated" and

"unmitigated" kind of evolved. Originally, our intention was to have a case where we had everything thrown in there from soup to nuts, including B.5.b, and then we wanted a separate case that we took B.5.b out of the picture, so we could show the value of B.5.b.

So our mitigated case is everything thrown in that we thought was realistic and that the operators would do, and that is our mitigated case. And then, the unmitigated case is pull B.5.b out, now what happens? Well, now we get core damage and releases. That's for those release curves that I showed.

VICE CHAIRMAN STETKAR: But let me --

MR. SCHAPEROW: We labeled them as "mitigated" and "unmitigated" now instead of B.5.b.

VICE CHAIRMAN STETKAR: I understand that. I want to focus more on the operator actions that are wired in there.

The Surry ISLOCA -- I had a chance to actually go back and read through their emergency procedures, and the Surry ISLOCA -- let me just -- because of the time here, let me just say I really think you should reconsider this assumption that the operators are guaranteed to shut off the high pressure

injection pumps, which saves them for later make up.

And the key operator error is that they don't make up to the RWST, because I think those two actions are very, very closely tied together in the procedure. So it is not clear how they can be absolutely perfect on step n and absolutely failed on step n+1, for example.

MEMBER SHACK: There's another one where you say, "This isn't in the procedures, but they do this anyway." And that is another one of those that, you know, maybe they would, maybe they wouldn't. But, you know, it is somehow assumed already that even --

VICE CHAIRMAN STETKAR: Well, those are some of the things that I would hope would be evaluated, you know, more -- in a more integrated sense in the Level 3 PRA where you would look at how those actions relate to one another and how they might or might not be using the procedures.

MEMBER CORRADINI: John, if I could just do it in color. You're saying the red bars have those actions buried inside of them.

VICE CHAIRMAN STETKAR: The red bars have some actions buried inside of them, because --

MEMBER CORRADINI: Except for B.5.b, no B.5.b.

VICE CHAIRMAN STETKAR: That's because of what was defined as a mitigating action. It was associated with a specific subset of equipment.

MEMBER SHACK: I mean, you could have done an analysis with B.5.b, with SAMGs, with EOPs, and sort of looked at the credit for each one of them. I mean, it -- life is too short, but --

VICE CHAIRMAN STETKAR: But that one in particular, because ISLOCA was kind of invisible on there.

MR. SCHAPEROW: I mean, part of the evolution of the project was that -- I mean, this started right after the Commission said, "Thou shalt have diesel-driven pumps and other ways to inject besides your turbine-driven and your AC-powered systems." So this was kind of one of the reasons -- one of the objectives of the project was to say, "Well, okay. What does this do for us, you know? Does this solve our problems?"

And I think, actually, as a result of Fukushima, I think a lot of people are thinking, yes, it probably does, but we want them to be safe against earthquakes and against flooding. And, you know, make sure you store them in a place so that even though it is good for security events, but also there is that

security safety stuff. You know, you've got to do both.

Let me switch over to --

DR. GHOSH: So for those of you who were at the Subcommittee meeting, this is going to be a higher level, shortened version of what we discussed a couple of weeks ago.

So as Jason mentioned, we have follow-on activity which we have started, which is an uncertainty analysis for SOARCA.

And if you go to the next slide, just so you know where we are, we are not done yet. We want to come back to the ACRS after we are done, so we don't have final results to share. So what I will be focusing more on is, what are our overall goals and the approach, the parameters that we have selected to study, and then just to give you a status of what preliminary analyses we have done so far and the schedule for finishing.

All right. So the next slide, please?

So the goals of the uncertainty analysis -- we basically want to develop some insight into the overall sensitivity of the SOARCA results to uncertainty and inputs.

And as you may recall, there are a number

of sensitivity analyses that were completed as part of the SOARCA study, but they generally looked at one issue at a time. And this is more of an attempt to look at what might be the combined effects of the important uncertainties, not just one sensitivity at a time. So that is kind of why we are doing this.

We want to identify what are the most influential input parameters for both releases and the consequences, and we would like to be able to demonstrate how we might go about doing the uncertainty analysis to demonstrate the methodology, because we expect to be doing more of this type of consequence analysis on the PRA coming up in the future.

And this is kind of the first time we are attempting to do something that is as integrated with as many MELCOR parameters as we are attempting right now.

Let's go to the next slide.

Our approach is to focus on the epistemic uncertainty in the input parameter values. That is the state of knowledge uncertainty. Just as a reminder, the aleatory uncertainty, because of the weather, was already treated as part of the SOARCA study in the MACCS calculations. And for the

uncertainty analysis we are handling the weather uncertainty in the same way that we did for the SOARCA study.

So what we are adding here is the state of knowledge uncertainty and the input parameters for both MELCOR and MAAP.

We are using the Peach Bottom unmitigated long-term station blackout as a first step, so that is the only criteria we are doing at this point.

And I'd just make a note, you know, Fukushima happened about a year ago on a plant that is similar to Peach Bottom. And the scenario evolved a little bit differently than what we have laid out for SOARCA. But we made a decision that we wouldn't change our scenario definition based on Fukushima, because then that would fundamentally divorce the uncertainty analysis from the SOARCA study.

So what we are planning to do instead is we are developing a separate qualitative discussion, you know, comparing our uncertainty analysis to Fukushima, similar to what the SOARCA study did in the appendix to the main report. So that is planned instead.

And as I mentioned, we are looking at the uncertainty and key model inputs for both the MELCOR

parameters, which lead to the source terms, and then the MACCS parameters, which get us to the end consequences.

MEMBER SHACK: How much of the model uncertainty do you think you are capturing by looking at these parameters? And, you know, do you need somehow to go off and have a separate box to deal with the model uncertainties?

DR. GHOSH: I think, you know, that's certainly a very interesting question. And we talked some about it at the Subcommittee meeting. You know, with a lot of the MELCOR parameters, they are kind of almost simulating potential alternate models. They are kind of lumped parameters to try to capture the effects of either different phenomenology or how things might evolve in the reactor.

So from that perspective, and varying some of these MELCOR parameters, we are getting at some of the potential effects of model uncertainty.

MEMBER SHACK: Are you thinking about covering that kind of uncertainty when you consider the ranges of parameters that you are choosing and the distributions?

DR. GHOSH: I would say to some extent. You know, I guess I didn't mention yet, we are relying

very heavily on expert judgment, and these are the experts who have been working with MELCOR for decades, and who actually developed the SOARCA models. And they are very well aware of the experiments that have been done and what data we do have from -- whatever we have from TMI, you know, from the various experiments that have been done.

And because they are the ones who kind of developed the MELCOR models, they have in mind what those parameters are meant to represent. So I think from that perspective it just naturally comes into the thinking, because, as I said, some of these parameters are really lumped parameters that are trying to represent more physical things. It is not just, you know, like a failure rate as you would have in a Level 1 PRA. So from that standpoint, yes.

But in terms of very explicitly -- for those things that we do have models, we are not addressing model uncertainty in this uncertainty analysis at this time. So the answer is yes and no. Maybe it's not very satisfactory.

I mean, I hope that in the report that we are writing up -- and you have the early version of kind of a snapshot of the early chapters of that report. We are trying to do a better job of

explaining, you know, what the parameters represent, so the reader can see, you know, in terms of which model uncertainties might be captured. But we won't be able to address everything.

Just as an example for it, like in the MACCS -- you know, in the MACCS code, you know, we are varying input. And there are models for how atmospheric transport -- or use a Gaussian plume model, for example. We are not looking at switching that out for an alternate model to see.

So, you know, this uncertainty analysis is very much tied to the models that were used in the SOARCA study. And as I said, to the extent that model uncertainty is explored, it is really where those parameters represent some alternate modeling of physical phenomena.

MEMBER REMPE: I think during our Subcommittee meeting we talked about the need to document areas where we knew we weren't capturing some of the modeling uncertainty, and it was agreed that to some extent that would be done.

And I was at a meeting earlier this week at another forum where there was a discussion about even the way that debris is held up in the core, that there are other models out there, by industry or other

places, where a different type of holdup, rather than the dribbling-down effect.

And there is limited data to support that, and, you know, a decision is what is in MELCOR -- is what is in MELCOR, and you can do sensitivities on that, and that's fine. But perhaps that type of documentation needs to reflect that it is recognized that there is some uncertainty with the amount of data we have, and the other models could predict something substantially different.

DR. GHOSH: Yes. Yes. And I think what we are planning right now to -- where we would include that type of discussion is the specific issues that have been raised. For example, the Peer Review Committee raised a number of issues. There are a few that were repeated by this Committee, and you just raised another one.

I think we are going to address, you know, the ones that have been raised. It is hard to promise to address absolutely everything. I mean --

MEMBER REMPE: I understand that.

DR. GHOSH: -- as I said, we certainly have a great body of experts. I'm not a subject matter expert in severe accident phenomenology, but we have a great group of experts. And I think we are

doing the best to identify what some of the important uncertainties are, and things that we just -- we know we can't address, but we recognize are important.

But we are not going to be able to do everything, so hopefully we will get most of the way there at least as far as important things go.

MEMBER BLEY: I don't want to let that -- because we talked about this at that meeting. And relying on what is brought up by review panels, who look just a little bit, given you have this group of people who are experts on what is there, they are also experts on what they didn't do.

And I think, you know, some reflection on where those models and phenomenology might lie that you haven't explored, you really ought to do that internally as well as relying on the outside comments and get that document.

DR. GHOSH: Yes, you're right. And maybe if --

MEMBER BLEY: Or it could be very embarrassing later when --

DR. GHOSH: Well, maybe it was unfair of me to say that we would only address those things brought up by the external body.

MEMBER BLEY: I hope so.

DR. GHOSH: But in many cases, you know, the independent review panels have brought up the same issues that our folks were thinking of. But certainly we will internally do that exercise, too.

MEMBER SCHULTZ: It sounds like you are headed in this direction. It would seem very useful as to where you are in the project now to set up a documentation structure that would be targeted at capturing these differences that you have already mentioned in the discussion here between what one would call a typical uncertainty study on input parameters and those parameters which we know are reflective of models, model features themselves, but you are trying to do an uncertainty associated with that. And there is unknowns out there that won't be captured in the uncertainty analysis, because you are not -- you don't have the time and information to explore that.

DR. GHOSH: Right, right.

MEMBER SCHULTZ: But if you set up that structure, that would allow not only the documentation to be more robust, but it would also I think allow you to capture more information from internal reviews and input as well as from the experts.

DR. GHOSH: Yes. Yes, we'll be -- I think

I mentioned in the Subcommittee meeting we are continually improving the documentation, and we are revisiting those early chapters to see that we have weighed it out clearly, so we will -- we look at that.

Okay. Next slide?

So our overall approach, essentially we used our -- the expert team that we have available to us, which again, you know, we have expertise in MELCOR, in MACCS, and these are the folks who actually created the SOARCA models. And we got together with the uncertainty methodology team, and we identified what are the key uncertain input parameters.

And the uncertainty in these key input parameters would be propagated in two steps. As you know, we have the MELCOR model to generate the source terms, and then that is to look at the consequences.

So we would first generate a set of source terms using the MELCOR model, and then feed those into the MACCS model. And so the MACCS model would take, for example, in one realization one source term from MELCOR and then one sample of all of the uncertain MACCS parameters to spit out one realization.

And we are looking at sample sizes of up to 300 for each iteration that we are doing. So we end up with 300 realizations, as we call it, in a

standard Monte Carlo approach.

MEMBER CORRADINI: So this makes total rigorous sense, but from a sensitivity standpoint, if I decided that I would have in-vessel coolability, and it stopped there and I could cool it, that seems to be an outerbound calculation that could be done to see a bound on the result. I mean, I understand all of this. You have distributions in your sample, and you have all of this fun.

But if I stop it somewhere, then I stop it, and I actually see a big delta or not a big delta, and I get some sort of information. The same thing with a vessel change -- in other words, the ones that you can't exercise this rigor with, are you going to do what I will call sensitivities or what -- I will say single-point calculations? Or is that still to be determined?

DR. GHOSH: Right now we have planed a very limited number of sensitivity analyses that I will get to at this end of this.

MEMBER CORRADINI: Okay, fine. That's fine. Okay.

DR. GHOSH: But just to -- I think as part of the SOARCA study, they did a lot of those one-off type sensitivity studies to look at individual issues.

And, in fact, a lot of what we are doing here was informed by what turned out to be important versus not in these earlier sensitivity studies. So that is another tool.

MR. SCHAPEROW: Also, we are not including anything in this scenario that would stop core damage. And we would need some kind of injection system, and we don't have that. We only have RCIC running for, what, up to, what, 10 hours?

DR. GHOSH: After the battery runs out --

MR. SCHAPEROW: I mean, there is nothing -- we don't include any operator actions or any other actions that would stop the accident in this scenario.

MEMBER CORRADINI: Actually, I wasn't thinking about operator actions. I'm thinking about physical process uncertainties.

DR. GHOSH: Right.

MR. SCHAPEROW: Got to get water in somehow. That's -- we are taking that away from it, so we can't --

DR. GHOSH: Yes, we haven't --

MR. SCHAPEROW: -- we can't stop the accident.

DR. GHOSH: We haven't fundamentally changed the scenario definition. So the way the

scenario is defined for the SOARCA or Peach Bottom are mitigated long term. That is where we are starting from, and then looking at the --

MR. SCHAPEROW: Unless we ran RCIC for two days, at which point if you say we're done, as we have in previous SOARCAs. But I don't --

DR. GHOSH: Right.

MR. SCHAPEROW: -- we're not -- I don't think we're -- we're not pushing that one that far. We don't --

DR. GHOSH: Right.

MR. SCHAPEROW: That's not --

MEMBER CORRADINI: Okay.

DR. GHOSH: And that's what I -- yes, and that's what I meant when I said we didn't change our scenario definition after -- based on Fukushima. We'll have a separate discussion on that.

So the results that we are planning to report are essentially an analysis of the source term releases. And cesium and iodine are usually held up as important -- cesium because cesium tends to dominate the long-term health risks, which is essentially the only consequences that we are seeing; and iodine historically is also of interest.

And from the consequence side, we will be

looking at the distribution of the latent cancer fatality risk with three dose threshold models. So LNT and the other two dose threshold models that were used for the SOARCA study.

And what we are really trying to get at with this study is to identify what are the most influential uncertain parameters and why. So kind of a description of, you know, what is driving the potential changes in the results? What are the phenomenological insights coming out of that?

The tools we are using are pretty standard statistical methods, such as regression analyses as well as scatter plots. And then, we are looking at individual realizations to get the phenomenological insights that we might not get from the standard statistical analyses, to see in different examples what might happen and how that -- what combinations of things might lead to very different results.

MEMBER SKILLMAN: What is it that gives you comfort that the three dose threshold models bound the target of interest?

DR. GHOSH: Oh. You know, I don't think the choice of the three dose models was meant to bound the possibilities. I don't know if, Jason, you wanted to --

MR. SCHAPEROW: Well, actually, we're including in our distributions -- for each of these three cases we -- for example, for our LNT case, we actually have a distribution on LCF risk factors in the model. So we are going to sample from that. So we are not trying to bound it; we are using distribution.

When we go to the background threshold assumption, we are going to have a distribution again of cancer risk factors in the model. We are going to sample from the distributions and then run the codes.

DR. GHOSH: And as far as the three dose models, we are not sampling those, so we are going to be reporting the results of each one separately, much as was done for the main SOARCA study.

We had toyed with the idea of sampling the dose models, but how do you come up with a way to -- it seems to be mixing apples and oranges. So we decided that we would just do three in parallel and report the results.

MR. SCHAPEROW: Thank you. Thank you.

DR. GHOSH: Sorry. The last bullet -- can you go back? It's an important point. The SOARCA Peer Review Committee Jason talked about was set up for the SOARCA study. But the uncertainty analysis

was actually outside of the scope of the Peer Review Committee.

But we were very interested in getting their guidance, so we solicited their guidance on just what our overall plan was in terms of the approach, the methodology, and our parameter choices and distributions. And we were lucky to be able to meet with them a couple of times, and we did update our parameter choices and distributions.

We put in some -- really thought seriously about possible correlations and put in some correlations based on peer review feedback. And then we circled back with them on how we adjust their comments on the parameters to the distributions this past January.

So as I mentioned earlier, our process relies very heavily on expert judgment. And we have a core team of staff from Sandia and the NRC with expertise in uncertainty methodology, so probability and statistics. And then, the MELCOR and MACCS modeling for SOARCA specifically, and also MELCOR and MACCS in general.

We used sort of an informal expert elicitation approach and an informal PIRT process. So not documented, you know, to the level that it would

be if we did a formal process, but that is roughly, you know, what we were -- had in mind when we went about this.

And the focus was on confirming that the parameters we chose and the representations in terms of the distributions did reflect the key sources of uncertainty, and that we have a defensible technical basis for what we are proposing.

And just philosophically, we were -- our attempt was to obtain contribution of uncertainty from across the spectrum of phenomena that are important in different phases of accident progression and in consequence analysis to get some depth and breadth of coverage rather than focusing very deeply in one area and not so much in others.

Yes?

MEMBER REMPE: Was there an attempt to have independent parameters?

DR. GHOSH: You know, we couldn't. And, you know, that should -- when we did our first cut maybe about two years ago, the hope was that we could make -- could come up with a set of independent parameters that would adequately represent key sources of uncertainty, and so on.

But in the end, we realized that that is

not really possible. So we do have correlated parameters in there with a definition of how they are correlated, so that the sampling can be done properly.

MEMBER REMPE: But maybe this is a documentation issue, but the radial debris relocation time constant, the debris lateral relocation cavity spillover and spreading rate, may all depend on the composition of the debris. Right? I mean, if it's viscous or non-viscous, the temperature, and things like that. And are those dependencies modeled somehow?

DR. GHOSH: Those parameters that you mentioned, in particular the in-vessel ones are -- because there is a solid and a liquid version, I believe.

MEMBER REMPE: Right.

DR. GHOSH: Those are correlated, and then the ex-vessel ones are correlated with each other.

MEMBER REMPE: Based on composition of the material, because, I mean, whether it's ceramic or metallic. And I just was wondering -- and, again, you don't have to answer today, but those kinds of things I think should be included in the documentation.

DR. GHOSH: Mark, are you on the line? I don't know if the line is open.

VICE CHAIRMAN STETKAR: Mark may be cut off, muted.

DR. GHOSH: Okay. That's okay.

VICE CHAIRMAN STETKAR: Knowing Mark, he is screaming at his phone.

(Laughter.)

MEMBER REMPE: But it just -- it doesn't have to be answered now, but if it's documented I think it should be -- or somehow or other it should be documented. And then, about having the same level -- okay, those debris-spreading ones are fairly high level but consider a lot of things together. And there is documentation in the report saying you have surrogate parameters selected.

But then, other cases, I would see something like decay and -- for the drywell head gap you had three parameters that you sampled on. So you went into the model and picked your parameters. And so I wouldn't have guessed that you tried to have equal level from what I saw in the report, and I don't quite understand that.

DR. GHOSH: Okay. Well, I guess maybe when we get to the next slide you will -- is it the next slide? Yes, let's go to the next slide.

Basically, and maybe this gives some idea

-- we were trying to capture -- for example, this is the list of the MELCOR in certain parameters, and some of these are one bullet but actually captures multiple parameters. But just see the areas that we cover.

The italicized sort of broad areas are ones that we were considering in terms of accident progression and what is happening in the reactor. And that is kind of what we mean by -- we were trying to look at these different phases or the different phenomena within the reactor and make sure that we were getting at the important phenomena there.

So, for example, for sequence issues we know that how long the battery lasts is very important, because that is the one kind of nod we have for how long RCIC is going to end up lasting. You know, it is completely dependent on how long the battery lasts.

And then, the SRV stochastic failure rate pretty much determined how the rest of the sequence goes. So that was kind of one area that we looked at.

And then, we have -- you can see the categories -- the in-vessel accident progression, the ex-vessel, you know, the containment and building behavior, and the fission product releases.

It is true that there are an equal number

of bullets under each of those. But in terms of the thought process we tried to go through and capture what we thought were the most important.

Now, for the drywell head flange parameters that we put in, we actually put those in after Fukushima. Because of the experience at Fukushima, we wanted to take a closer look at, you know, whether that could be something that is important or an alternate, you know, early pathway, or so on.

And those three parameters that were described actually gets implemented as a pressure versus, you know, weak area curve. So, really, those three parameters become one input to the model.

MEMBER REMPE: Okay. So it looks like they sampled on each one, what I read, but maybe I --

DR. GHOSH: That's right.

MEMBER REMPE: Oh, okay.

DR. GHOSH: They did -- and then generated the curve, which is what is actually put into the MELCOR model.

MEMBER REMPE: Okay. So maybe I didn't quite understand the documentation, but maybe -- it looked like there wasn't a balance across the board. Sometimes broad parameters were selected, and

sometimes very distinct little inputs to models were selected.

DR. GHOSH: Yes. And to some extent that is what we have available with the MELCOR models that we have. I think we talked a little bit about this last time, you know, so it's true that some of them are more surrogate parameters for a lot of different things that are happening.

That is kind of where we get into the -- this parameter might be addressing model uncertainty, too, because there is so much we are putting into this set of parameters. Whereas, with the head bolt one, that is a very specific engineering model that has -- those are physical parameters.

So it goes to the level of modeling that we have available in MELCOR, you know, to --

MEMBER REMPE: So documenting will be key.

DR. GHOSH: Yes. Yes. We'll look at that.

On the next page after we describe all of those parameters we have what we actually implement in MELCOR. We have a graph with, you know, the pressure versus area, which is what is in there. But we can look at that.

So, yes, we just -- so, again, we tried to

kind of cover the broad areas of accident progression and what is happening in the reactor. So looking at, sorry, the in-vessel accident progression, how in an ex-vessel the containment and building behavior, and the fission product behavior essentially, which I won't go through all of these. We can go to the next one.

And then, similarly, for the MACCS parameters, MACCS models takes the source term essentially coming out of the reactor and the models the atmospheric transport and deposition, as well as the emergency planning and response, and then the health effects as well. And we have sample parameters for all of those.

Just a quick note on the health effects. We did put in the early -- we put in some early health effect parameters and varied them for completeness sake. But we are not getting anything close to any kind of early fatality risk, so that was in there for completeness. But our analysis has really focused on the latent fatality risk, because that is really where we see any kind of possible risk.

Next slide, please.

So uncertainty analysis is very much --

MEMBER RAY: Just any kind of health risk

is what you are talking -- you said any kind of risk, but --

DR. GHOSH: Sorry.

MEMBER RAY: -- health risk.

DR. GHOSH: You're right, any kind of health risk.

Uncertainty analysis is very much an interactive process, and we have done multiple MELCOR runs at this point, and I will explain a little bit why.

So the first one we did, we implemented all of the parameter distributions exactly as they are laid out in Chapter 4 of the draft report chapters that we gave you where we were modeling the SRV stochastic failure. We have the SRV thermal failure criteria, and what we ended up seeing is that with the distributions as we have them in Chapter 4 that this first case led to a lot of main steam line creep ruptures.

And when we reflected on what this means it seemed that we were really modeling a different scenario than what was modeled in the SOARCA best estimate case.

So to get a better understanding of what was going on, and just to give you a summary of maybe

something of what was driving that, we were sampling -- when you have SRV thermal failure, we were sampling an open area between zero and one. And we are revisiting that distribution right now, a uniform distribution between zero and one, because it seems that most people think it should be skewed towards full open.

So we ran a second case where we kept the SRV thermal failure area open -- opening constant at one, which is fully open, to see, you know, do we get something that is -- that looks more like the SOARCA scenario rather than a main steam line creep rupture scenario, which is kind of a different scenario.

And then, as a third case, we kept the SRV stochastic failure rate constant at the SOARCA value, and then varied all of the other parameters. So to get insights about essentially what is going on and what is driving differences in the results for these different cases.

The preliminary MACCS analyses we have done so far, we only did the MACCS runs for the first combined scenario, and we used only the LNT model so far. And as I mentioned before, we are looking at aleatory uncertainty in the weather the same way as we did for the SOARCA study. And we looked at the

epistemic uncertainty in the parameters as laid out in the draft Chapter 4.

So next slide?

So just a very, very, very high level summary of the results that we are seeing so far. The cesium release timings -- and, again, we are concentrating on cesium because that is the key driver for the latent health effects.

The cesium release timings are similar to the SOARCA estimate, and the magnitude of release at 48 hours is generally slightly higher than the SOARCA estimate, but it is still far below the siting study results.

And, you know, one could guess that if you get, for example, a case with a lot of main steam line creep rupture that the SOARCA study, the sensitivity studies that were in there already showed that the cesium total releases would be higher. So we are certainly seeing that with the uncertainty analysis where we have seen quite a few main steam line creep rupture cases.

For the MACCS results, the distribution of the risk results for latent cancer fatality risk is similar to what was shown for the SOARCA study, and the early fatality risk is still essentially zero.

And I guess the main point here is that, you know, even with cesium releases that are higher coming out of MELCOR, in MACCS a lot of the latent -- the long-term health risk is dominated by people coming back to their homes after they have been evacuated.

So in some sense, you know, the habitability criterion or the return criterion has a large effect on what people are allowed to receive. So you really see a sub-linear effect on the MACCS results.

MEMBER CORRADINI: So are you going to modify the habitability criteria to see its effect?

DR. GHOSH: That is one of our planned sensitivity analyses. We had originally included it as an uncertain parameter, but that is almost a policy decision. You know, the states --

MEMBER CORRADINI: It is definitely a policy decision.

DR. GHOSH: Yes. The state set that criterion, and the states have basically told us what that would be. So it is -- you know, what basis do we have to vary it?

Now, the one thing is that it is true that if there really were an accident, the states are free

to set a different criterion. But we felt that it was better to explore that sensitivity outside of the integrated uncertainty analysis rather than --

MEMBER CORRADINI: Well, I wouldn't put a probability distribution on a politician.

(Laughter.)

DR. GHOSH: Yes. It's a delicate matter. We didn't want to do that.

Okay. The next slide?

So the uncertainty analysis is very much still in progress. There are a few parameter distributions in the MELCOR model that are currently under revision. I mentioned one of them. We are thinking of changing the SRV thermal failure open area distribution, which is currently uniform zero to one, but we think -- and we've gotten a lot of feedback that it should be skewed much more towards the fully open or one.

We are still looking at the SRV stochastic failure rate distribution, but there continues to be very little data to support that. So we are not completely sure what we might change about that, but we are still looking at that.

And then, there are a couple of others we mentioned during the Subcommittee meeting, such as the

aerosol parameters, the dynamic agglomeration shape factors, as well as the drywell liner open area. And actually, for that what the -- the big thing we are looking at is how fast that opening happens, and whether that is physically realistic, and if there is some other way that we could -- we could model that.

This is a good example where we are really getting at a modeling issue rather than -- it is how MELCOR models, you know, that process. So --

MEMBER CORRADINI: But I guess since you have picked on that one -- I was waiting for you to get down to the third bullet, fourth bullet. But since you've picked on that one, I thought in the SOARCA analysis if it is water on the floor, it doesn't fail the line.

DR. GHOSH: Yes.

MEMBER CORRADINI: Okay. So what conditions would there not be water on the floor? What of the accident sequences is essentially a dry pedestal region? I forget.

MR. SCHAPEROW: All of them. The water is leaving the vessel through the SRVs and going through the SRV tailpipe in the suppression pool.

MEMBER CORRADINI: And there is no pre-existing water in any of them.

MR. SCHAPEROW: No.

MEMBER CORRADINI: Okay. So was there pre-existing water in Fukushima? I mean, I'm asking the question because -- I'm sorry that I keep on linking to something, but it just strikes me we would have seen a dramatic -- since we had a station blackout, we would have seen a dramatic depressurization low in all three units if I would have seen a drywell failure with a dry -- with a dry floor.

And my impression of all of the calculations is essentially it was a wet floor, which means it didn't fail. Well, it depressurized, but late. Do you see where I'm -- do you see my thinking process? I'm trying to connect something that happened to what I'm calculating, and I am coming up with an empty set.

MR. SCHAPEROW: Yes, I think we are still investigating that particular issue.

MEMBER CORRADINI: Because I don't see -- I guess it gets back to my comment on your suggestion which is how big the hole -- I don't know it matters how big the hole is. It matters whether there is water or not. If there is water there, then I've got a totally different situation.

DR. GHOSH: Yes. Actually, this particular issue had to do with -- and you're right, in the end it is not the size of the hole that it seems that matters, but how fast it opens up.

In the MELCOR model that we have -- huh?

MEMBER CORRADINI: I said that's even worse. Nobody is going to know how fast it opens. Is there water there or there's not water there? If there's not water there, you're toast.

DR. GHOSH: The reason it was showing up as important in our preliminary analyses is because we varied the liner open area. And when the open area got past a certain threshold amount, because this opening is assumed to open up very quickly in the way that it is modeled, it essentially drew a huge pressure differential and drew wet well water into the drywell, which causes an increase in our source term, because then when that water evaporates that source term is -- from the wet well is available in the drywell.

So that is kind of why we are investigating the issue in terms of how we model things.

So we need to finish our parameter importance analyses, the regression analyses on our

updated runs, and we will keep looking for interesting phenomenological insights for both MELCOR and with the MACCS, too.

Right now we have a handful of separate sensitivity analyses that we are planning. One is on the habitability criterion that we wanted to do separately. The second is the timing of two operator actions in the unmitigated long-term station blackout.

As you mentioned in the Subcommittee meeting, there are two actions that are credited. It is the manual depressurization at one hour, and then taking manual control of RCIC at two hours. And we want to see what the effect of varying those two might be.

The Peer Review Committee had brought this up as something that we should vary. We had discussions with them, and it was felt that, especially without HRA expertise on our team, that it wouldn't maybe not be the best thing to include that uncertainty as part of the integrated uncertainty analysis, but, rather, we could explore the sensitivity of the results to those timings as a separate sensitivity study.

And then, the lower head -- I guess the possible, you know, other failure mechanisms for the

lower head -- we talked about this at the last Subcommittee, so this is a new bullet we have added.

PARTICIPANT: Well done.

(Laughter.)

DR. GHOSH: You know, we had quite a bit of discussion at the Subcommittee. This is an issue we have thought about before, we have been struggling with for quite a while. The Peer Review Committee had brought it up as well. ACRS brought it up again a couple of weeks ago. So we are in earnest exploring our options on how we might do a sensitivity study for that.

MEMBER CORRADINI: If I might just make sure you understand my comments. I agree with three, but three is not just the structural. Three is the coolability in-vessel that would essentially preclude this, as well as if you get this, what are the conditions ex-vessel that the junk falls into?

And I am still back to my concern that I -- in all of the various -- well, I can't use that as an example. It just strikes me that there is a connection between what is happening in-vessel and potential coolability, and what can happen ex-vessel with potential coolability, that would take you down different paths.

So they are relatively connected, and at least in this one area of MELCOR I think the analysts themselves would admit that MELCOR makes some relatively large simplifying calculational assumptions.

MEMBER REMPE: You're about done with this before you get into schedule, and one of the things we spent some time at the Subcommittee talking about was "best estimate" and the fact that that phrase was used a lot in the report.

DR. GHOSH: Yes.

MEMBER REMPE: And then, you have an uncertainty analysis. And I actually saw someone talk about you really have an uncertainty distribution on a point estimate. And I think that is what the uncertainty analysis really is, and there is a lot of uncertainties with predicting severe accidents.

And I am not sure we have a best estimate with SOARCA. I think we have eliminated the things we know are wrong, because of the increased knowledge about phenomenological or severe accident phenomena. But what is your thoughts about it? Do you think you have a best estimate?

MR. SCHAPEROW: This is one of the things -- actually, this was discussed quite a bit at Peer

Review Committee meetings as well. And I think one of our Peer -- actually, the Peer Review Committee chair, she might have expressed it best. She said, "You know, I think that SOARCA is more realistic than the earlier analyses in that there are conservatisms remaining." Core coolability, ex-vessels might be an example, other things.

And you're right, they are using the phrase "best estimate" as in, okay, we're done, we never have to -- why even bother with uncertainty?

MEMBER REMPE: If our models don't predict things that we know, then our best estimate was wrong.

MR. SCHAPEROW: This is, you know, we anticipate I think fair -- I think it's fair to say we anticipate doing more research like this over the years. MELCOR is a result of, you know, all of the development work that went before, but I think we can -- we will still be working these issues.

The uncertainty analysis I think is going to provide a lot of additional insight into -- one of the things that maybe hasn't been talked about much is that when you do a sensitivity analysis you take one parameter and you move it over to another spot, and then you rerun the calculation and you get a different answer.

But sometimes if you take one parameter and you move it over here, and you take another parameter and you move it over there, and then you rerun the calculation, you get the answer -- the final answer doesn't move very much. It's that -- because in an integrated model you have this counteracting effects.

I'm hoping we are going to see some of that. I haven't really been as deeply involved in the uncertainty analyses as Tina has. I'm hoping we will see some of that in this analysis. And maybe some of these uncertainties that may be uncertain in one area, like, wow, you know, this parameter could vary a lot. It may wash out when you put it into a big integral calculation like this. I am hoping we are going to get some of those insights as well in these calculations.

Or maybe on the other hand, if you had a -- maybe even in a big integrated model that will still be an important uncertainty, and we've got to keep looking at that when we do our risk studies and our severe accident studies.

MEMBER CORRADINI: Can I just ask another one? Just so we're --

MR. SCHAPEROW: Sure thing.

MEMBER CORRADINI: So you had a long-term station blackout and a short-term station blackout, and in none of those the pump seals of the jet pumps of Peach Bottom leaked onto the floor of the drywell?

MR. SCHAPEROW: Correct.

MEMBER CORRADINI: Astonishing.

MR. SCHAPEROW: Pump seal leakage has been an issue in the past for PWRs, and we do model that in --

MEMBER CORRADINI: But not in these pumps.

MR. SCHAPEROW: Never -- to my knowledge, the severe accident analysis that I have been involved with over the last 15-ish years, the pump seal leakage for BWRs has not been an issue. Maybe it's a new issue, but --

MEMBER CORRADINI: I'm just thinking back to Fukushima, is where the inventory was going, and one of the things was the pump seals were leaking on the jet pumps.

MR. SCHAPEROW: I asked our advisor in this area, Charlie Tinkler, pretty much the same question about six years ago. I said, "We've got pump seal leakage in the PWR. Why are we modeling in the BWR?" I don't remember his exact answer, but it was -- it hasn't really been an issue, maybe it's a lower

pressure pump, a different style of pump.

MEMBER SIEBER: Temperature impression.

MR. SCHAPEROW: I don't remember the exact answer. I'm sorry, I wish I did. I wish he was here.

MEMBER RAY: There ought to be an answer, though, because it's an important question.

MR. SCHAPEROW: Yes.

MEMBER RAY: I'm not saying the answer is any one thing or another, but there needs to be a good reason.

MR. SCHAPEROW: If you end up doing Peach Bottom calculations and Surry calculations side to side, it enables you to compare what we have done in one area and another by different analysts and with different styles of reactors. In a lot of cases, you see the same thing. Core damage starts about the same time, lower head failure is at the same time. It is really quite fascinating to hold the two analyses.

But this is one area where we have a little difference in our models, and I'm -- you're right, this is --

MEMBER CORRADINI: Because when a lot of us were looking at the accident in Japan, one of the places inventory was being lost, at least it was claimed to be lost, is essentially leakage from the

seals. And that is what -- maybe I'm not -- I'm not a pump person, so this --

MEMBER RAY: Well, I'm a pump person, but -- let's just assume for a second that it's not true, but it is good enough.

(Laughter.)

VICE CHAIRMAN STETKAR: So you're a consultant.

(Laughter.)

MEMBER RAY: Let's put it this way, John. Like you, I have run a lot of pumps in my life. Okay?

And if you are going to assume the seals don't leak, which may be the right assumption, just have a good reason. That's all.

MEMBER SHACK: Charlie Tinkler told me.

(Laughter.)

MEMBER RAY: And that doesn't surprise me.

MEMBER BLEY: If you go back when this first became an issue in the PRAs, which is where it was first raised long ago, there were at least three different types of seals at that time, some of which, due to heatup, led to much larger flows than others which were very different kind of seals, and, you know, some were hydrodynamic seals.

And there were various different kinds.

The kinds in the BWR and one of the PWRs -- I forget which one -- had much lower leak rates. They still could leak. But if you go back to that you might find some good information. And I don't know if anybody has done much on it since then. I haven't seen anything, and that has been quite a long time, the '80s I guess when most of that --

MEMBER RAY: That's quite a long time ago.

MEMBER BLEY: Yes.

MEMBER RAY: Well, people have canned rotors for a reason. And it isn't because they like to maintain canned rotor pumps.

DR. GHOSH: If I could come back to something Jason was mentioning. You know, one of the things with uncertainty analyses in the past -- and I think we are also finding with preliminary analyses on this one is that there could be a lot of things that are uncertain in your analysis in terms of inputs and the way you model things.

But in the end, it is often really a handful of things that make the biggest difference, and that is kind of what we are trying to get at here. We have done a bunch of single sensitivity analyses for the main study.

Now we are trying to integrate the look at

a lot of individual issues, you know, which combinations of things can make, you know, an interesting difference in the results. So that is kind of what we were trying to get at, because not everything ends up being important.

We have been surprised in both directions, both things we thought were important which looks like it is turning out to be a "no, never mind." And then, things that, you know, we didn't realize could be an issue, kind of like this drywell liner, you know, failure area. The way that it is modeled, you know, it makes a difference. So we are getting surprises in both directions.

So the last slide, this is just a schedule of completion for this analysis. We are -- as Jason mentioned, there is a Commission Memorandum going up in June that forwards the results of this SOARCA study, and that Memo will contain a very short discussion on the status of the UA and our interim conclusions.

We expect to have a draft report available in September, and we would like to come back to the ACRS with results maybe in the October timeframe. And we are looking for a letter from the ACRS, if you all wanted to do that, on the final uncertainty analysis.

And we are aiming to have the final report submitted for publication in the November timeframe.

I think that's it. Are there any questions?

(No response.)

MEMBER SHACK: Any more questions from the Committee?

(No response.)

Well, thank you very much for a good presentation. You also got us a little time back.

MR. SCHAPEROW: Yes, you did. Amazing.

DR. GHOSH: To make up for last time.

(Laughter.)

MEMBER SHACK: Back to you, Mr. Chairman.

CHAIRMAN ARMIJO: Okay. Thank you, Bill.

I think we are going to take a break now, well, because it's time for a break. So let's take a break until ten of three.

(Whereupon, the proceedings in the foregoing matter went off the record at 2:35 p.m. and went back on the record at 2:49 p.m.)

CHAIRMAN ARMIJO: We're back on the record, and the next topic is St. Lucie 1 Extended Power Uprate. And Dr. Banerjee will lead us through this

briefing.

MEMBER BANERJEE: Thanks, Sam. We had a Subcommittee meeting a couple of weeks ago, so we're on a fairly tight schedule to get a letter out this meeting. Nonetheless, I think we can do it. It's a pleasure to introduce Allen Howe who will start the proceedings off.

As you know, St. Lucie is one of the first combustion plants that I've dealt with myself here. There were other uprates but I think it was before my time, so it's sort of an interesting experience. Anyway, go ahead, Allen.

MR. HOWE: All right, thank you.

Good afternoon. I'm Allen Howe. I'm the Deputy Division Director in the Division of Operating Reactor Licensing in the Office of Nuclear Reactor Regulation. I appreciate the opportunity to brief the ACRS today on the St. Lucie extended power uprate application.

Today, the NRC staff will address selected areas highlighted as open items from the Subcommittee meeting that happened as you said two weeks ago, or a couple of weeks ago. A couple of these open items include the steam generator U-tube hold-up questions, audit reports on the staff's confirmatory analyses

using FRAPCON, and the disposition of some supplemental LOCA analyses.

During the course of our review, the staff had frequent communications with the licensee. These includes conference calls, audits, letters, and also public meetings. We also issued several rounds of requests for additional information, and those spanned multiple technical disciplines.

We believe that this open dialogue contributed positively to the overall review. And with regard to the review, I'm very pleased with the thoroughness and the depth of the staff's review. There were a multitude of technical issues that the staff interacted on. Those interactions were extensive with the licensee during the course of our review.

At this point, I'll turn over the meeting to the Project Manager, Tracy Orf, who will introduce the discussions.

MR. ORF: Thank you, Allen. Good afternoon, and my name is Tracy Orf, I'm the St. Lucie Project Manager in NRR. I'd like to take this opportunity to thank the ACRS members for your effort in reviewing proposed EPU applications in such a short time, as Dr. Banerjee said, and especially for Weidong Wang for helping us so much. I also want to express my thanks

to the NRC staff for conducting a thorough review of such a complex application, and also providing their support at these meetings.

During today's Full Committee meeting you will hear from both the licensee and the NRC staff in providing you with the details of the EPU application. The objective is to provide additional follow-up information relating to the details of the St. Lucie Unit 1 EPU application and provide the status of those open items, as Allen had mentioned earlier.

Before we cover the agenda items for today's meeting, I would like to provide some background information related to the proposed EPU. On November 22nd, 2010 the licensee submitted its license amendment request for St. Lucie Unit 1. The proposed amendment will increase each unit's license for a power level from 2,700 megawatts thermal to 3,020 megawatts thermal. This includes a 1.7 percent measurement uncertainty recapture resulting in an 18 percent increase from the original licensed thermal power.

The staff's method of review was based on Review Standard RS-001 which is NRC's Review Plan for EPUs. As you know, it provides a safety evaluation template, as well as matrices that cover the multiple

technical areas that staff is to review. Also, the staff completed several audits, as Allen said earlier, and our RAIs resulted in the licensee responding with over 85 to 90 supplements to the application.

During the Subcommittee meeting that was held on April 26th, there were several requests for information that Dr. Banerjee and the Subcommittee asked us to come back and answer. The ones on the screen right now are the ones that the staff were -- is going to answer. There's a few others that the licensee will talk about later.

First was the U-bend hold-up for water in the steam generator reflooding the core. Dr. Len Ward was going to speak to, but unfortunately he had a prior personal commitment to this, but we also provided some information, some graphs to Dr. Banerjee before the meeting. We also provided the audit reports as Dr. Rempe had requested, and the disposition of the supplemental LOCA analyses we'll hear about later in the discussion.

This afternoon the licensee will first provide an introduction which includes an overview of the proposed EPU and a description of their proposed plant modifications. And then the licensee and the NRC staff will each present their presentations on the

safety analysis with additional discussion on the thermal conductivity degradation issue.

Unless there are any questions, I'd like to turn the presentation over now to Mr. Rich Anderson. Rich is the Site Vice President for St. Lucie.

MR. ANDERSON: Thank you. Okay, good afternoon. My name is Rich Anderson, as Tracy said, and I'm the Site Vice President at St. Lucie. I've been at St. Lucie for about two and a half years now as the Site Vice President. I do want to thank the Committee for the opportunity to speak on FPL representing the extended power uprate for Unit 1. Next slide.

With me here today to share information about the St. Lucie extended power uprate are Jack Hoffman, Licensing Manager; Chris Wasik, Licensing Manager, and Jay Kabadi, Nuclear Fuels Manager for St. Lucie. This is a significant undertaking performing this power uprate. It not only increases the licensed power for St. Lucie, but it results in many equipment upgrades that will improve the safety and reliability of the plant, which Jack will discuss later in the presentation. Next slide.

St. Lucie is located on Hutchinson Island,

Southeast Fort Pierce, Florida, and is the primary electrical generation source for St. Lucie County. It is a combustion engineering pressurized water reactor nuclear steam supply system. We have a Westinghouse turbine generator with one high-pressure and two low-pressure turbines.

The original architectural engineer was Ebasco. Our nuclear fuel supplier is AREVA, and our current electrical gross generation output is approximately 950 megawatts electric.

With regard to some of the key milestones and major equipment replacements for St. Lucie Unit 1, the original operating license was issued in 1976. Due to corrosion issues, the steam generators were replaced in 1998 with B&W Series 67 steam generators.

In 2003, we received a renewal on the operating license for Unit 1 extending the operating license until 2036. In addition, in 2003 a new single failure-proof crane was installed to support our dry fuel storage operations.

During 2005 refueling outage, the reactor vessel head and pressurizer were replaced to address industry issues with Alloy 600. And, finally, we've begun long-term equipment reliability plans which include replacement of the reactor coolant pump motors

which will complete by 2015.

The original license core thermal power for Unit 1 was 2,560 megawatts thermal. An approximate 5-1/2 percent stretch power uprate was approved in 1981 which increased the core power level to 2,700 megawatts thermal. This was accomplished with relatively few equipment changes or hardware modifications to the plant.

The extended power uprate we are discussing today will increase the licensed core thermal power of Unit 1 to 3,020 megawatts thermal. This represents an additional 100 megawatts of clean nuclear generation.

Unless there are questions, this completes what I intended to cover, and I'll turn the presentation over to Jack Hoffman.

MR. HOFFMAN: Thanks, Rich. Good afternoon. My name is Jack Hoffman, and I'm the Licensing Manager for the St. Lucie Unit 1 Extended Power Uprate Project.

As stated earlier by Rich Anderson, Florida Power & Light has submitted a license amendment request to the NRC for an approximate 12 percent license core power increase for St. Lucie Unit 1. This proposed power increase consists of a 10

percent uprate from the current power level of 2,700 megawatts, and it also includes a 1.7 percent core power increase as a result of a measurement uncertainty recapture. And together, these power increases raise the license core power of St. Lucie Unit 1 to 3,020 megawatts thermal.

As part of the upgrade project we performed a grid system impact study to evaluate the impact of the project on the reliability of the electric power grid. That study was performed with the most limiting configuration of both St. Lucie Units 1 and 2 at their extended power uprate level, and the results of the grid stimulation -- assimilations indicate acceptable grid performance for the most extreme event. Also, the modifications to support operation of St. Lucie Unit 1 at the uprated power level are being implemented this year in 2012.

During the ACRS Subcommittee meeting back in April we received five additional questions from the ACRS Subcommittee members, two of which involve mechanical systems, pressurizer safety valves and potential for reverse flow in a reactor coolant loop, and also three questions or additional issues involving fuel-related analyses. That information was provided to the Subcommittee members shortly after the

meeting for their review. Next slide.

This is a layout of a typical combustion engineering two-loop NSSS, or nuclear steam supply system. As you can see, the NSSS is composed of two steam generators, one in each loop. Each loop also contains one hot leg, two reactor coolants pumps and two associated cold legs. And this configuration is very close to that at St. Lucie Unit 1. Next slide.

MEMBER SKILLMAN: Each loop contains what, please?

MR. HOFFMAN: Each loops contains one hot leg, one steam generator, two reactor coolant pumps, two cold legs.

MEMBER SKILLMAN: Two reactor coolant pumps. I thought you said one.

MR. HOFFMAN: Correct.

MEMBER SKILLMAN: Okay. Thank you.

MR. HOFFMAN: I'm sorry if I did.

MEMBER SKILLMAN: Thank you.

MR. HOFFMAN: Okay. This next table provides a comparison of the primary and secondary plant parameters for St. Lucie Unit 1. As Rich Anderson noted, St. Lucie Unit 1 was originally licensed in 1976 at a core power level of 2,560 megawatts thermal, and an approximate 5-1/2 percent

stretch power uprate was approved and implemented in 1981.

The proposed EPU consists of a 320 megawatt thermal core power increase above the current power level of 2,700 megawatts. As part of the project, the fuel-related analyses have taken credit for an additional assumed 5,000 gallons per minute per reactor coolant system loop of flow, and that provides us additional margin and improves the plant response to postulated events.

Also, the proposed cold leg for a combustion engineering plant, let me preface by saying that CE Units or Combustion Engineering Units operate with a constant T-cold, cold leg temperature, and for the extended power uprate project the cold leg temperature is being increased by 2 degrees Fahrenheit to a value of 551 degrees. And this temperature was mainly chosen that the EPU operating steam generator pressure is close to what we experience today.

Also, a bounding hot leg temperature at 606 degrees Fahrenheit is predicted for the EPU. This EPU hot leg temperature is well below the industry experience for similar pressurized water reactor uprates. And the EPU analyses have concluded that the existing Alloy 600 program is sufficient to manage

potential aging effects at EPU conditions. Next slide.

Several EPU modifications as shown on this slide have beneficial safety impact. The first modification I'd like to just mention is the first on the slide, and that's an increase in the safety injection tank design pressure. This change allows St. Lucie Unit 1 to increase its operating safety injection tank pressure, and this provides us additional benefits and margin for the small break LOCA event.

The last modification on the slide increases the reactor protection system steam generator low-level trip set point to improve the St. Lucie Unit plant response risk profile for beyond design basis events.

MEMBER STETKAR: Jack, unfortunately I didn't have an opportunity to attend the Subcommittee meeting. The third bullet on this online containment mini-purge capability, will that be operated continuously?

MR. HOFFMAN: No.

MEMBER STETKAR: Okay.

MR. HOFFMAN: That system is intermittently operated. And what we did for power uprate is we have a current limit of 2.4 psi. That's our maximum

containment pressure, and for margin considerations in our containment analyses we've reduced that to .5, and we provided the plant for -- with the capability to an automatic system that they can purge at power and maintain that pressure, similar to Unit 2. Unit 2 has a very similar design, and we --

MEMBER STETKAR: How big are those lines, say about 8-inch or so?

MR. HOFFMAN: Dave, that's a 3-inch line?

DAVE: A 3-inch line.

MEMBER STETKAR: Oh, only 3. Okay, thank you.

MR. HOFFMAN: Unit 1, and it's an 8-inch line on Unit 2.

MEMBER STETKAR: Thanks.

MR. HOFFMAN: Okay? Next slide. For the balance of the plant, a number of changes are being implemented in the steam path. In particular, both the high pressure and low pressure steam paths are being replaced for EPU. Also, a modernized turbine control system is being implemented to replace the existing obsolete turbine control system. And typical of an extended power uprate project, St. Lucie is also replacing the main feedwater pumps, feedwater regulating valve internals, and we've also replaced

our Number 5 high-pressure feedwater heaters. Next slide.

Some additional modifications to support power generation are on this slide. Likewise, similar to the feedwater pumps we've replaced the internals of our heater drain pumps and upgraded several heater drain valves, and heater drain valve controls.

We also, as part of this uprate project, the uprate team took an opportunity to resolve a number of longstanding low margin issues at St. Lucie Unit 1, one in particular is the replacement of the turbine cooling water heat exchangers. That's been problematic for St. Lucie Unit 1 during the summer months when our ocean water or ultimate heat sync temperatures are elevated, and we've not only replaced those heat exchangers to accommodate the EPU, but we've added an additional approximate 50 percent margin. And, also improved materials and improved cathodic protection system also as part of that modification. Next slide.

On the electrical side, the main generator stator is being rewound and the rotor is being replaced, and the main hydrogen pressure is being increased from 60 psi to 75 psi to accommodate the increased generator rating for EPU conditions. One

other modification, again, that I'd like to point out is a current low margin issue on our 480 volt alternating current or AC buses and margin that we have to our degraded voltage relay set points. And we took the initiative with the uprate project to make a number of electrical improvements with the power uprate project to substantially improve that margin for the degraded voltage relay set point.

Okay. Unless there are any questions for me, I'd like to turn it over to Rudy Gil who will discuss the EPU evaluations performed for the steam generators.

MR. GIL: Good afternoon. My name is Rudy Gil. I'm the Programs Engineering Manager for FPL. The information presented, I have two slides on the subject, was based on areas of interest that the Subcommittees from ACRS had shown before associated with our efforts for uprates on Point Beach and Turkey Point, so I wanted to make sure that those were covered.

The analysis performed for the steam generators has demonstrated acceptable tube wear at the proposed uprated conditions. The key acceptance parameters shown on this table are satisfied with good margin. The criteria include fluid elastic

instability, vortex setting and predicted end-of-life wear. The actual values are included in the license submittal section referenced on this slide. They are considered proprietary by our vendors.

One value that I did want to share is the analysis that show that the wear at the U-Bend area increases only slightly. The current projections are 12.7 percent wear, and those would increase to 12.9 percent, so only a slight change in those numbers. Next slide.

As reviewed in the previous slide, the maximum fluid elastic instability velocity ratio is within acceptance criteria, and it is also within current industry experience based on steam generators of the same design that have been functioning without issues. The industry has seen many years of operating experience with no indication of tube vibration problems with steam generators that are comparable to the ones that we have installed on St. Lucie Unit 1.

MEMBER BANERJEE: So, if we want to ask any more questions on the steam generator issue, this is the time because the full Committee has not heard this because of their steam generator expert needs to return fairly quickly I understand. So, this is the time to ask if you want to hear more.

MEMBER SIEBER: Who manufactured the replacement steam generator?

MR. GIL: These are B&W Canada.

MEMBER SIEBER: Okay.

MEMBER BANERJEE: And they've had very good experience with very few tubes --

MR. GIL: Yes, just a couple of other points. St. Lucie Unit 1 has been operating very well. We've plugged a total of 14 tubes on Unit 1 Alpha, and one tube on 1 Bravo. That was very early on, and the last inspection had nothing. Slight vibration that we had, slight wear, we had it very early on, has fully attenuated.

MEMBER SIEBER: Okay. Where in the steam generator were the 14 tubes plugged?

MR. GIL: Those were in the U-Bend area.

MEMBER SIEBER: Okay. Inside or outside of the bundle?

MR. GIL: Oh, the -- Steve, I don't know if we -- I don't recall. They were actually in the center on a section.

MR. FLUIT: Yes. I'm Steve Fluit from Babcock & Wilcox. Essentially, all the threading indications were within the bundle along one fan bar.

MEMBER SIEBER: Oh, okay.

MR. FLUIT: It's a very localized area within the bundle.

MEMBER SIEBER: Okay, thank you.

MR. GIL: So, it was very, as he said, very localized, so we obviously watch that area especially later on and everything attenuated to have no additional wear.

MEMBER SIEBER: So, you do 100 percent examination around that area?

MR. GIL: Well, we do -- when we do the -- have done our inspections we do 100 percent bobbin inspection for the whole bundle.

MR. RAY: After the EPU they're going to have an inspection in less than a cycle length to see -- I mean, that's really the issue, has it caused any change, because it's trivial so far. The only issue is what change occurs, but they've got an inspection plan to --

MEMBER BANERJEE: That's about a year. Right?

MR. GIL: We've had -- yes. How long is the cycle?

MR. ANDERSON: That would be roughly one year.

MR. GIL: About one year, yes. So, it's

shorter than the normal cycle, but basically we've had very good results thus far from the calculations the changes we're making. We don't see that really affecting the vibration issues very much. But also very importantly, obviously, is we'll do a full inspection, 100 percent inspection after about a year. And that will really just verify all the --

MEMBER SIEBER: Is that multi-frequency?

MR. GIL: For the analysis, yes.

MEMBER SIEBER: Okay.

MR. GIL: And as you know, the bobbin program is very good for the wear indications that we would be expecting here.

MEMBER SIEBER: Yes, there's others that are -- have you gone into any more specialized analysis beyond the bobbin coil?

MR. GIL: Where necessary. For example, typically when we do exceed these wear indications in order -- especially early on, in order to make sure we understand them, we'll do the plus point.

MEMBER SIEBER: Okay.

MR. GIL: And that's a verification tool. The bottom tool for wear indication is fully qualified.

MEMBER SIEBER: Yes, the bobbin, sort of a

gross measurement compared to some other techniques.

MR. GIL: Yes. Compared to the rotating probe.

MEMBER SIEBER: Right, rotating --

MR. GIL: And we have applied that one, also, here just to verify what we had.

MEMBER SIEBER: And you wrote that surrounding tubes with rotating pancake probe?

MR. GIL: Any tubes that showed any kind of wear, so it was very -- and actually very limited wear that we'd had.

MEMBER SIEBER: Thank you.

MEMBER BANERJEE: So, our understanding is that there's still quite a margin to your initiation of fluid elastic instabilities.

MR. GIL: Yes, the change is minor from what we had. And I think as we had discussed in the Subcommittee, we also compared the numbers that we have now to other -- there are about five U.S. units that are right in the same range, some a little bit above it. Also, no issues with wear.

MEMBER BANERJEE: Millstone 2 and Calvert Cliffs 1 and 2, if I understand it, the U-Bend area, your kinetic energy is in this case a little bit higher. Right? About 5 percent higher, or a little bit

more?

MR. GIL: In those particular -- let me let Steve --

MR. RAY: Rho v squared?

MR. FLUIT: Yes, that's correct. The rho v squared parameter is slightly higher for St. Lucie under EPU conditions than the other B&W replacement CE steam generators, but the important factor is the fluid elastic instability ratio, and as Rudy said, if we compare that to a number of other B&W replacement steam generators, they're not System 67 replacement steam generators but they have the same design of the main support structure. And these other plants have been operating successfully with fluid elastic instability values very similar to the St. Lucie EPU values, and they have no significant wear.

MEMBER BANERJEE: And the support distances are about the same and everything in these steam generators, the other ones that you're talking about?

MR. FLUIT: Yes. I mean, the steam generators are different sizes, so the exact support legs will be different, the tube diameters are different, but when you calculate the fluid elastic instability ratio, all of those parameters are being taken into account.

MEMBER BANERJEE: What about at Millstone 2 and Calvert Cliffs, are they more or less the same steam generators as the one that --

MR. FLUIT: Yes, they're essentially identical.

MEMBER BANERJEE: Identical.

MEMBER SIEBER: These are the Alloy 600 tubes?

MR. RAY: 690.

MR. GIL: 690, yes, they're replacement 690 units.

MEMBER SIEBER: Okay, good.

MEMBER BANERJEE: Okay, thank you. Okay, please go ahead.

MR. GIL: Okay. Basically, I think that brought it to the end of my presentation, unless there are any further questions. If there aren't, what I'd like to do is introduce Jay Kabadi, who will present the analysis results.

MR. KABADI: Good afternoon. My name is Jay Kabadi, I'm Nuclear Fuel Manager for St. Lucie. For EPU for the core design we will offset some of the EPU effects, we reduced the core design limits, both the F delta H, which is the total integrated radial peaking factor, and also for the peak linear heat

rate. We did not do any fuel design change for EPU. To get this extra energy corresponding to this higher power we are doing that by combination of the feed enrichment and the batch size, so batch size for EPU is going up from the current cycle designs.

The burnable absorber will remain GAD. That's what we have been using for several cycles in the past, and the core loading pattern will follow the same type of strategy.

MEMBER BANERJEE: You're supposed to be -- is this monobloc guide tube --

MR. KABADI: Right. Right now, monobloc guide tube was not specifically needed for EPU. However, when we did the analysis we covered that from the thermal hydraulic point of view. Right now actually the first cycle for EPU will not have monobloc design. It will still have the standard guide tube design.

MEMBER BANERJEE: We're asking for your --

MR. KABADI: Yes.

MEMBER BANERJEE: In your license --

MR. KABADI: That is correct. That's part of the --

MEMBER BANERJEE: Right, you're asking --

MR. KABADI: As part of the EPU, we did

cover that. That is correct.

MEMBER SIEBER: Okay. Now, your enrichment has not gone up very much, so that tells me among other things that you're probably loading more fuel assemblies than would otherwise with this kind of core design?

MR. KABADI: Yes, that is correct. Typically, our -- we have been loading enrichment in the range of about 4.2 and something, so now we'll go up slightly, maybe 4.4, 4.5, but upper limit is 4.6, so we could go up to 4.6. The backsides will go up.

MEMBER SIEBER: Does that mean that the fuel average burnup at discharge is about the same as it would have been with the older core design?

MR. KABADI: That is correct. I think those —-- some will be discharged with the less burner because will be putting more fuel, but other burnup limit is maintained the same as we --

MEMBER SIEBER: What would be the maximum burnup that you would expect for high-power fuel assembly charge?

MR. KABADI: Our peak burnup for ROD is 62,000 and we normally design in the range of 60 to 61. That does remain about the same. And assembly wise, we stay below 55.

MEMBER SIEBER: Okay.

MEMBER BANERJEE: That won't change very much compared to --

MR. KABADI: Yes, that's not going to -- the limits --

MEMBER SIEBER: It won't change hardly at all.

MR. KABADI: That is correct.

MEMBER SIEBER: Okay, thanks.

MR. KABADI: Yes. As far as the other nuclear parameters go, shutdown margin and moderator temperature coefficient limits are unchanged for EPU. However, for improving the boron delivery we are increasing the boron concentrations in all the three tanks which are used mainly for the safety analysis. One is the boric acid makeup tank, the refueling water tank, and the safety injection tank. The refueling water tank and safety injection tank borons are increased from 1,720 ppm, which is the current value, to 1,900 ppm.

MEMBER SIEBER: Okay.

MR. KABADI: Correspondingly, for refueling boron we are increasing that value also to 1,900 ppm.

This slide just shows the methodology we use for all the safety analysis. Right now, all the

analysis are -- will follow the S-RELAP5 base methodology, for both non-LOCA and for large and small break LOCA. As far as the DNH and DNB analysis go, we will continue to follow the same method what we are using now, which is XCOBRA-IIIC and HTP correlation for DNB. For the --

MEMBER BANERJEE: HTP is the --

MR. KABADI: Yes, HTP is the high thermal performance -- that's the fuel we have right now and will continue to use.

For safety analysis, however, when we did these analyses there were a lot of additional biasing of input parameters were done based on some of the review comments or RAIs registered from the staff. So, the safety analysis is much more conservative than what our current analyses are.

Now, this slide shows some of the results of the safety analysis. In the decrease in flow category, both the loss of flow and locked rotor meet the acceptance criteria with adequate margin. In the overheating, loss of load is the limiting event as shown on the slide. We meet the acceptance criteria of 2,750 for the ICS pressure, and similarly for main steam system we meet the acceptance criteria of 1,100.

Other events in this category are not

limiting for pressure; however, for EPU we did one extra event which is the feed line break, which we do not have currently in our design basis. And this event is analyzed to show the adequacy of our AFW system to take decay heat out without losing RCS subcooling. And that analysis showed acceptable results.

In the old cooling category, steam line break is the limiting event, and we analyzed that both for what is called pre-SCRAM steam line break which is looking for conditions prior to the reactor trip, and a post-SCRAM steam line break. All the reasons we meet the acceptance criteria, and also the limits of any fuel failures that go into the dose analysis.

Reactivity additional in this category the events are mainly CEA withdrawal, CEA drop, and CEA ejections. The CEA withdrawal has been analyzed both for RCS pressure, old pressure, and also for DNB, and the analysis showed adequate margin to the limit. CEA drop is also analyzed for DNBR. It is not limiting for DNBR, it's much less benign than the loss of flow; however, we analyze that every cycle and that shows acceptable results.

CEA ejection we have reduced our acceptance criteria for the fuel enthalpy which its current design basis is 280, SRV has 230; however, for

our analysis we are taking a much lower acceptance criteria of 200 calories per gram.

Other events in the reactivity addition category, boron dilution is nothing different than what we see right now since our core design and borons are not changing that significantly, but we meet all the criteria for all the modes for boron dilution. However, for these other RCS mass addition, and RC depressurizer, these are the -- some of the new events we have analyzed for review. In the mass addition, the CVCS malfunction or inadvertent SI. This is not in our current design basis, so this is analyzed for EPU to show that the pressurizer does not fill. And that shows acceptable results.

In the RCS depressurization we have an inadvertent opening of PRV even for DNB, and that is analyzed also for EPU. However, for EPU we also analyzed that event for pressurizer fuel.

MEMBER SKILLMAN: What is your pressurizer volume clean, please?

MR. KABADI: It's slightly over 1,500 cubic feet.

MEMBER SKILLMAN: Thank you.

MR. KABADI: Yes. This slide shows the small break LOCA results. Our pre-EPU and EPU both

follow the Appendix K methodology for the PCD, for EPU it is 1,807, whereas for pre-EPU is it was 1,765. There were several changes done to the -- both the plant configuration and also to the inputs that help the PCD, tube plugging has been reduced, and the SID, as Jack mentioned before, we raised the operating pressure that help significantly for the small break LOCA.

One other thing I just want to highlight, I think in the prior slides we showed results related to the fuel centerline melt, and all those have accounted for the thermal conductivity degradation, so the fuel centerline melt limit which was checked for all the safety analysis, we did account for thermal conductivity degradation.

MEMBER BANERJEE: Not in the small break LOCA.

MR. KABADI: No, I'm saying the fuel centerline melt category which are the other events which were presented.

MEMBER ABDEL-KHALIK: Now, for the large break LOCA you do account for thermal conductivity degradation.

MR. KABADI: That is correct.

MEMBER ABDEL-KHALIK: And the question was

asked during the Subcommittee meeting as to whether the empirical correction factor that you applied is impacted by the linear heat rate.

MR. KABADI: Right. And I think --

MEMBER ABDEL-KHALIK: And I guess you, AREVA, has provided information showing -- segregating the data --

MR. KABADI: That is correct.

MEMBER ABDEL-KHALIK: -- by different ranges of centerline temperature, which is equivalent to segregating the data by linear heat rate. Now, the ranges that are given are for centerline temperatures less than 750k, between 750 and 1,000, and 250 degrees increment.

MR. KABADI: That's correct.

MEMBER ABDEL-KHALIK: And for the cases where the centerline temperature is relatively high, meaning greater than 1,250k, the data goes only up to 30 gigawatt days per metric ton versus a fuel design limit of 62 gigawatt days per ton. So, the question is for the hot spot where you calculate the peak cladding temperature corresponding to this acceptance criterion, how can you justify extrapolating the data that goes only to 30 gigawatt days per ton up to a design limit of 62 gigawatt days per ton?

MR. KABADI: Yes. I will have Bert from AREVA respond to that.

MR. DUNN: Bert Dunn, AREVA. We're getting close to proprietary information. I don't know where-

(Simultaneous speaking.)

CHAIRMAN ARMIJO: If necessary, we can close the meeting, if necessary, so you can show the graphs.

MR. DUNN: Let's try and work around that.

CHAIRMAN ARMIJO: Give us your best answer.

MR. DUNN: Okay, thank you. Could you repeat the question just quickly. I think you were saying why isn't there high temperature data at the burnups from 32 --

MEMBER ABDEL-KHALIK: I understand what you did. We had a graph that shows the entire data sets and is not segregated. What you did is segregate the data based on centerline temperature ranges in 250 degree increments, which is the same as segregating the data by ranges. And for the data subsets that pertain to high centerline temperatures, the data goes only up to 30 gigawatt days per metric ton.

MR. DUNN: That's correct.

MEMBER ABDEL-KHALIK: And if that is the case, and if that is the range for which we are

concerned how can we justify extrapolating the data to 62 gigawatt days per ton?

MR. DUNN: The data available within the Robotic does not have the data -- have high temperature -- I'm sorry, high power data at about 30, 35 gigawatt days per metric ton. So, what we needed to do is to normalize our data to the predicted -- I'm sorry, to the measured temperature -- I'm sorry, predicted temperature so that as we go up an hour in temperature for those cases out there, we get an increase in the penalty, if you will, or the adjustment that you're going to make proportionally to the amount of increased power that you're modeling. Probably, really the extreme of that would occur at about -- for your -- you've got an onset that would occur at about 45 degradation. I'm not particularly worried about it, or I'm not particularly concerned about any data above 45 or 50 gigawatt days per ton.

MEMBER ABDEL-KHALIK: But, nevertheless --

(Simultaneous speaking.)

MEMBER ABDEL-KHALIK: normalizes the data, but the fact remains that you are extrapolating data beyond -- you're extrapolating this empiricism for the ranges of centerline temperatures in which you are interested beyond the data which is 30 gigawatt days

per ton.

MR. DUNN: That is correct.

MEMBER ABDEL-KHALIK: So, the question is how do you justify that? How do you justify that given the fact that it's purely empirical?

MR. DUNN: Well, purely empirical, I don't quite understand that.

MEMBER ABDEL-KHALIK: Based on data. I mean, you're measuring data and you're fitting a curve to it. And in this case, it would be just simply an extrapolation beyond 30 gigawatt days per ton.

MR. DUNN: Again, that's the reason for normalizing it to the predicted temperature so we pick data, and that's --

MEMBER ABDEL-KHALIK: Whether you normalize it or you do not normalize it, it's still an extrapolation of data beyond 30 gigawatt days per ton.

MR. DUNN: It's an extrapolation of data to higher powers for conditions beyond 30 gigawatt days per metric ton, yes, sir. And the -- I probably need to get to a person more attuned to the codes. I can tell you that the various codes we have looked at do the same thing. If we look at FRAPCON, if we look at -- and the database for FRAPCON, we look at the other codes, they are all using about the same database.

MEMBER ABDEL-KHALIK: I'm an engineer. I don't extrapolate data beyond its limits, and if you're extrapolating something beyond 30 gigawatt days per ton and using it all the way up to 63 gigawatt days per ton, I have a question as to the validity of that extrapolation. Bert, it's my --

MR. DUNN: Yes. I'm going to have to go to Shi-Hsiung or somebody on this.

CHAIRMAN ARMIJO: Why don't you go back, and we'll also ask the staff, but it's my understanding that all the data measured thermal conductivity degradation well beyond 30 gigawatt days per ton. So, how you've used it or chosen to use it is something you have to explain. But as far as having data high burnups on the amount of thermal degradation -- conductivity degradation, that's certainly available. So, somewhere you have to explain that or we'll ask the same questions of the staff.

MEMBER BANERJEE: I don't even assume it's available. Let's start with the question, is it available?

MEMBER ABDEL-KHALIK: Well, the data that's available for burnups beyond 62 gigawatt days per ton are all low linear heat rate data.

MEMBER BANERJEE: I've looked at the curve.

MEMBER ABDEL-KHALIK: Right.

MEMBER SCHULTZ: And that's because it's difficult to achieve high linear heat generation rates at high burnup.

CHAIRMAN ARMIJO: That's right.

MEMBER ABDEL-KHALIK: So, if that's the case how do you justify --

MEMBER SCHULTZ: Both in experiment and in reality.

MEMBER ABDEL-KHALIK: -- that you will get the same kind of degradation if you to operate at these high linear heat rates beyond 30 gigawatt days per ton for which data are available?

CHAIRMAN ARMIJO: I think the Haldon -- well, look, there's data as a function of burnup and then your heat rate where the biggest impact is -- in thermal degradation is at the lower temperatures, the lower offering temperatures. And then as you get to higher burnup and high power it all tends to converge, the degradation tends to disappear. We've had that presented in the past, but it's not our job to --

MEMBER BANERJEE: I think we should be asking -- and I think it's a fair question. Is the degradation that you observed not only a function of burnup but also a function of heat flux in the heat

rate or whatever. I mean, it's really up to the applicant to prove, or you've got to prove that it's not. I mean, if they show based on the current data that it's not a function for linear heat rate, then it doesn't matter. But if it is, then I think it's a valid question.

CHAIRMAN ARMIJO: I mean, they do --

MEMBER BANERJEE: You've just got these graphs, so it may have been sent earlier but we didn't get it earlier because of the system of delivery here.

MR. DUNN: If I might come back in, we have the -- one of our co-developers in Richland on the phone, Shi-Hsiung, that would like to try and answer the question.

CHAIRMAN ARMIJO: Sure. Go ahead.

MR. DUNN: Shi-Hsiung, you may be on mute.

MEMBER STETKAR: We'll have to open it up.

MEMBER ABDEL-KHALIK: Is there somebody on the line?

CHAIRMAN ARMIJO: Tanny just went back to the lines.

MR. WANG: There's 18 people on the line.

MR. DUNN: Shi-Hsiung, we're not hearing you again, so you're probably wasting your -- before we go into that, the benchmarks that he provided you

are for the entire code prediction, not just for thermal conductivity degradation.

MEMBER ABDEL-KHALIK: I mean, you know, I can do the translation going from the errors --

MR. SHAN: Hello. Yes, Shi-Hsiung is here.

CHAIRMAN ARMIJO: Okay, go ahead.

MR. SHAN: Yes. When we did the analysis we tried to use all high burnup data but because of fuel rod temperature depends on the gap at high burnup all the gaps are closed. That's the reason you didn't see high temperature data at high burnup. Although lack of that, we have data from theoretical studies based on RODEX4 code which has thermal conductivity degradation, and also NRC's ARTIST code, FRAPCON and the base of FRAPCON thermal conductivity degradation data, the paper published by OFI. If we thought thermal conductivity degradation like the ratio of with and without thermal conductivity degradation versus fuel temperature you can see thermal conductivity degradation is very high, like can be 50 percent at 60 megawatt day per KTU and it was decreased while temperature increased to less than 10 percent. So, we are fitting the code, I mean RODEX2 code to the temperature data and the low temperature.

Actually, we evaluated the thermal

conductivity. In fact, it's more conservative. That means we've got more penalty than try to fitting the data at high temperature, so that's the reason we think although Haldon data is very hard to get high temperature data, but the methodology used here is still conservative because the degradation effect is much higher at low temperature, and it decreases as temperature increases.

MEMBER ABDEL-KHALIK: Well, that is not consistent with the data that we have, where if you look at the subset of the data for centerline temperatures below 750K, the percent degradation as indicated by the percent deviation in centerline temperature is actually lower for the data set where the centerline temperature is less than 750 degrees K.

MR. SHAN: This is -- the comparison in the figure is for RODEX2 code without thermal conductivity degradation. I'm talking about it's like a comparison of the thermal conductivity correlation using different codes.

MEMBER ABDEL-KHALIK: Okay. In all cases, what is being plotted is measured minus predicted divided by predicted. Is that correct?

MR. DUNN: Yes, that's correct.

MEMBER ABDEL-KHALIK: All right. Isn't that

sort of an indication of the extent of thermal conductivity degradation?

MR. DUNN: Well, it's a measure of the extent of the performance of the entire code. The code has many aspects that contribute to thermal conductivity degradation, and some aren't bundled.

MEMBER ABDEL-KHALIK: Okay. Again, you have different fits for different ranges of temperature. Correct?

MR. DUNN: No.

MEMBER ABDEL-KHALIK: They're sort of straight line fits for the different --

MR. DUNN: In the sample that you've got there, yes.

MEMBER ABDEL-KHALIK: Correct. Right. And in all cases, these fits are not necessarily of lower slope than the empirical correction factor that you used.

MEMBER SHACK: Just let me go one -- do these plots include the thermal degradation correction, or are these just --

MR. DUNN: These plots are a comparison of the code's performance. They're benchmarks of the entire code including certain aspects of thermal conductivity degradation such as build up of different

isotopes within the fuel, and they don't include some of the others. Thermal conductivity degradation itself as a model is not in the RODEX3 code.

MEMBER ABDEL-KHALIK: They just use it as an empirical correction, so they don't have an extractive model for the extent of thermal conductivity degradation. They just see how much the centerline temperature increases and add that as essentially a penalty to corrupt the prediction of the code. And, again, if you look at the correction factor that you use versus the empirical straight line fits in this case for the various temperature ranges, not all these fits have a lower slope than the empirical correlation that you use. So, if I were to extrapolate it is quite possible that the correction factor that I would need would be larger than whatever you used.

MR. DUNN: If you were to -- I'm afraid I'm not quite following you, but are you saying if you were to extrapolate from the high temperature data below 25 --

MEMBER ABDEL-KHALIK: Correct, all the way to 62.

MR. DUNN: -- all the way out to 62?

MEMBER ABDEL-KHALIK: Right. Right.

MR. DUNN: Well, if I look at 1,750 and

1,500 I would say I'm using a higher correction factor. But I don't think -- I mean, it's not too much of a difference.

MEMBER BANERJEE: I think that you're not getting a responsive response to your question.

MEMBER ABDEL-KHALIK: No, I'm not. I think the fundamental question is that you're extrapolating data beyond its range. That's the fundamental question. You're using data that goes only up to 30 gigawatt days per ton to predict a correction factor up to 62 gigawatt days per ton.

MEMBER BANERJEE: I think if you rephrase the question you can say --

MR. DUNN: No, I'm sorry.

MEMBER BANERJEE: Excuse me, let me rephrase the question a little bit. In any of your calculations are you ever in the range where you are extrapolating outside the range of the data that you have shown us here?

MEMBER ABDEL-KHALIK: For a given linear heat rate.

MEMBER BANERJEE: And let that be on the record. Yes. If you are, say so now because we don't like extrapolation on empirical correlations.

MR. KABADI: I think the point here is the

data --

MEMBER BANERJEE: Well, let him answer the question. Are you extrapolating or not?

MR. DUNN: Are we -- if we do high linear heat rates at 45 gigawatt days per metric ton --

MEMBER BANERJEE: I think we've asked a specific question, within the calculations you have presented to us where you are using this TCD correlation, have you extrapolated outside or not?

MR. DUNN: Is your question relative -- is your question are the calculations presented to you the LOCA calculations?

MEMBER BANERJEE: Any calculations you have presented to us.

MR. DUNN: The LOCA calculations you cover linear heat rate at beyond 30 gigawatt days per metric ton, which are higher than the data that we've used to benchmark the fuel performance codes to at that --

MEMBER BANERJEE: So, your answer is yes.

MR. DUNN: Now, the uncertainty that we attach will also provide some margin to which you are talking about. This is the bias that we apply, and we consider this to be the best estimate value. And then on top of this there is an uncertainty figured with the standard deviation that -- of 130 degrees

Fahrenheit that can add up to 260 or maybe even a little bit more degrees to the centerline fuel temperature.

CHAIRMAN ARMIJO: Okay, the question has been answered.

MEMBER BANERJEE: Let's move on.

CHAIRMAN ARMIJO: Let's move along.

MEMBER BANERJEE: Yes.

MEMBER ABDEL-KHALIK: I guess that -- I think it would be good for us to ask that also of the staff, see why they're satisfied with this situation.

MEMBER SIEBER: Actually, this goes on for every reload analysis that's submitted, the same question. So, the staff I think would be best able to tell us how they treat that situation. Thirty thousand, we've been beyond 30,000 --

MEMBER CORRADINI: For a while.

MEMBER ABDEL-KHALIK: For a long time.

MEMBER CORRADINI: For a long time.

MEMBER SIEBER: Yes.

MEMBER CORRADINI: This is not just this one case, unless I'm misunderstanding.

MEMBER SIEBER: I can remember going beyond 30,000 when I was the fuel manager, and that was 30 years ago.

CHAIRMAN ARMIJO: Okay.

MEMBER BANERJEE: But you are not doing a best estimate analysis, you are doing Appendix K, is what I'm saying.

MEMBER SCHULTZ: Well, the question is, is in the interim here the model as I understand it is not using the thermal conductivity degradation. It's including a provision for it. And the discussion is how that's being done, and whether that's appropriate conservative, or not.

MEMBER BANERJEE: Yes, because it affects the stored energy in the fuel.

MEMBER SCHULTZ: Of course.

MEMBER SIEBER: And it's most dependent on the conductivity.

CHAIRMAN ARMIJO: If we get bogged down on this question, we have to address the whole thing, so let's try to keep this moving.

MEMBER BANERJEE: So, let's move on to the next, and we'll clear this up as time goes on.

MR. KABADI: Okay. So, this slide shows the results of the large break LOCA. The PCD is 1,667 as presented here, and all the acceptance criteria are met.

MEMBER BANERJEE: Yes. One of the things

for the Committee to realize here is that there are usually two peaks in the large break LOCA, one is the so called blow down peak and the other is the reflux peak. The blow down peak is affected very strongly by the stored energy in the fuel. And what you are seeing here is this peak is the blow down peak. And the reason the values are so low is in this calculation the reflux peak is lower because they have a lot of emergency core cooling in the system, safety injection. So that's why the reflux peak is --

MEMBER CORRADINI: I mean, you're pointing to the first line. Right?

MR. KABADI: Yes.

MEMBER CORRADINI: So there are two things changing. If they went from Appendix K to best estimate it would go down and now they've upgraded and it goes back up. So, we're seeing the effect of two things.

MEMBER BANERJEE: Yes. Well, the Appendix K was the pre-EPU calculation.

MEMBER CORRADINI: Understood. That's what I was trying to understand.

MR. KABADI: Okay. I think that completes my presentation.

CHAIRMAN ARMIJO: Okay. Questions?

MEMBER BANERJEE: So, we'll try to resolve this issue during this if we can.

CHAIRMAN ARMIJO: I just want to keep moving. I think we should --

MEMBER BANERJEE: Thank you very much.

CHAIRMAN ARMIJO: People on the phone would you please mute your phones because it's creating a lot of noise here.

MR. MIRANDA: Good afternoon. My name is Sam Miranda. I'm a Technical Reviewer in the Reactor Systems Branch, and I have with me Jennifer Gall, another Technical Reviewer in the Reactor Systems Branch, and Matthew Panicker, who is with the Code and Fuel Performance Branch.

We're going to talk about the accident analyses and fuel design. I'm going to concentrate on the non-LOCA analyses. Jennifer Gall will talk about the LOCA analyses, and Matthew Panicker will talk about thermal conductivity degradation and fuel performance.

I'm not going to go through all of the non-LOCA accident analyses. You've seen that in the safety evaluation report, and the licensee has provided information on that in their presentation to the Subcommittee. I'm just going to talk about a few

of the analyses in which issues arose and how those issues were resolved.

The first of these is the feed line break and we also had the mass additional events. There are three here. You will see that there's inadvertent opening of a PORV. This was added as a mass additional event. Normally, this is analyzed as a dissipated operational occurrence that could cause thermal margin degradation, and possibly DNB. And then we had some questions concerning loss of coolant.

So, the feed line break -- our problem with the feed line break in the application was that the licensee had defined this as a cool down event, and it could be defined as a cool down event. If you analyze the event with a dry steam blow down it looks a lot like a steam line break, and that is a cool down event. And, consequently, the licensee stated that as a cool down event the feed line break is bounded by the main steam line break and, therefore, did not do an analysis for the feed line break.

And the staff did not accept this approach and we asked the licensee to perform an analysis of the feed line break as a heat up event. It is listed among the heat up events in Reg Guide 1.70, the standard format and content for safety analysis

reports. It's also listed as a heat up event in the Standard Review Plan, Section 15.2.8, which is referenced in Review Standard 001.

We did receive an analysis of the feed line break and we audited it on January 30 and 31st of this year, and the results were acceptable. The results showed that there was some cooling maintained in the reactor coolant system throughout the feed line break.

The inadvertent actuation of ECCS is the classic mass addition event. It's a spurious signal that actuates ECCS, and possibly could fill the pressurizer. And once having filled the pressurizer pass water through the PORVs. And since the PORVs are not qualified for water relief, once having passed water the PORVs are assumed to stick open. And if they do stick open, this would create a small break LOCA at the top of the pressurizer, and thus we see the progression of an AOO into a more serious event, small break LOCA. And that is not permitted by the ANS acceptance criteria that the licensee has committed to satisfy in their licensing basis.

The inadvertent ECCS actuation is not in the St. Lucie licensing basis, and the reason for that is that the shut off head of the SI pumps in the ECCS

is no capable -- it's lower than the RCS nominal pressure so they cannot pump into the RCS at nominal pressure; therefore, they did not provide an analysis. And, normally, this would be an acceptable approach except the licensee also indicated that they have added to the ECCS their charging pumps which are positive displacement pumps.

We understand that the charging pumps have been there all along, except the licensee had not been taking credit for them in any of the accident analyses. However, they have -- they are in the ECCS and they are actuated when the safety injection signal is generated.

Therefore, with the positive displacement pumps in the ECCS now the pressurizer can fill and water can be discharged through the PORVs. And, therefore, the analysis should be provided.

And this is the acceptance criteria that needs to be met. We had issued -- the NRC staff had issued a RIS on this subject in 2005. So, at our request, the licensee has provided an analysis of the inadvertent actuation of ECCS, and have also provided an analysis of the CVCS malfunction.

And the CVCS malfunction is the AOO that could occur if, for example, a pressurizer level

signal becomes faulty and indicates to the CVCS that pressurizer level is low causing the CVCS flow to increase, and continued flow from the charging pumps will eventually fill the pressurizer and pass water through the PORVs.

The analysis that they provided indicated that it took almost 11 minutes after the high pressurizer level alarm to fill the pressurizer, and 11 minutes is considered by the staff to be sufficient for operator action to turn off the CVCS flow.

MEMBER SKILLMAN: Sam, did the staff witness the licensee performing the securing of these pumps at the simulator, by chance? Did you go and watch the licensee perform this action?

MR. MIRANDA: No, we didn't, but the licensee provides emergency operating procedures and time tests these operations. This is a question -- this is an RAI that the staff typically asks for this event. That whatever time is required you need to show that the analysis is acceptable. The licensee would have to back that up with time trials at the simulator. But we didn't see that ourselves.

MEMBER SKILLMAN: Thank you.

MEMBER BROWN: How long does it take to get to the alarm level? You've got the time from 11 to --

for the alarm until it spills, but how long for normal expecting operating level until it gets the alarm?

MR. MIRANDA: It's less than 11 minutes.

MR. HORTON: Can I speak here a little bit, please? My name is Todd Horton, FPL. I oversee the operating crews. I spoke this one specifically during the Subcommittee. The alarm comes in on a deviation from a set point for pressurizer level for each power level. We have a calculated pressurizer level set point, and at a deviation of 35 percent that alarm will come in.

This particular scenario, inadvertent actuation of emergency core cooling systems is a scenario that's run quite often on the operating crews. We do have a specific abnormal operating procedure specifically to design to address this condition. And the way the scenario would work is we get the alarm on the safety injection actuation. The operating crews are trained to communicate to the whole crew that we have that signal. They enter the abnormal operating procedure, and then they take manual action to secure the charging pumps. The pressurizer level will come in within a few moments to identify that they have that deviation.

MEMBER BROWN: Okay, that still didn't -- how long from that set point at which you expect it to be until it gets to the alarm level, five minutes?

MR. HORTON: No, it's 3 percent which is the charging pumps running are approximately 150 gallons per minute for the three pumps, 1 percent pressurizer level is about 66 gallons, so you're talking within just two to three minutes the alarm is coming in.

MEMBER BROWN: Okay, two to three minutes. Now, significantly less than 11.

MR. HORTON: That's correct.

MEMBER BROWN: Okay. Along with the other alarms for safety injection.

MR. HORTON: Pardon?

MEMBER BROWN: Along with all the other alarms.

MR. HORTON: Yes. No, I understand.

MEMBER BROWN: Got it.

MR. MIRANDA: Yes, I should note that unlike Westinghouse plants, this plant if an inadvertent ECCS signal is generated that does not automatically cause a reactor trip.

MEMBER SKILLMAN: Sam, one other question. Can this inadvertent ECCS actuation occur

simultaneously with another event that allows the pressurizer to swell such that there could be the swelling in addition to the charging pump inventory? In other words, could there be an under cooling event that accompanies the inadvertent actuation of ECCS where the operators are now facing the swell of the reactor cooling systems pushing the pressurizer level, plus the mass addition that it's coming from the charging pumps?

MR. MIRANDA: Are you asking whether two events can occur independently or one event can cause the other?

MEMBER SKILLMAN: You tell me.

MEMBER POWERS: He's asking about a TMI event.

MEMBER SKILLMAN: I'm thinking about that one that you hate to have happen where there's been a -- some form of an under cooling event, ECCS lights off, but because of the under cooling event now the 10 or 11,000 cubic feet in the reactor cooling system are swelling because there's an under cooling event. And, oh by the way, I now have an inadvertent ECCS and I have these charging pumps operating, so I'm now witnessing the swell of the reactor coolant inventory pushing out the pressurizer level, plus I have the

charging pump inventory. So, I have a double effect, in which case this 11 minutes might be six minutes or three minutes.

MR. MIRANDA: Okay. I would say that if you have an under cooling event, for example a loss of feedwater, that would not be a reason for ECCS actuation. And unless you postulate that you have inadvertent ECCS actuation, I don't see that situation occurring. If you have the inadvertent ECCS actuation, now you have two independent events, and we're not talking about an ARO any more. We have -- and it would be outside the design basis.

MEMBER SKILLMAN: Thank you.

MR. MIRANDA: This is another instance where you could have a swell, the inadvertent opening of a PORV, and this looks a little bit like Three Mile Island. We have the inadvertent opening of a PORV which is analyzed in safety analysis reports as a AOO that can decrease the RCS inventory, and it also decreases RCS pressure. And the decrease in RCS pressure leads to a degradation in thermal margin, and could possibly lead to fuel damage, DNB. And the analyses extend until the time of reactor trip. And the licensee demonstrates with this analysis that there are features of the reactor protection system

such as the thermal margin low pressure trip or the low pressurizer pressure trip which provide the reactor trip in time to prevent DNB. And that is where the analysis ends.

We looked at this analysis and looked at it beyond the time of reactor trip, and noticed that as the RCS depressurizes it will eventually lead -- after the reactor trip it will lead to the actuation of ECCS. This actuation is not spurious. This is intended and it should come -- it's part of the design. And once ECCS is actuated, the pressurizer could fill as a result of that.

We have in this case, for example, the ECCS would begin to inject with the positive displacement pumps, and as the pressurizer pressure continues to decrease it will drop eventually below the shutoff head on the safety injection pumps, and they will begin to inject. And if the operator does nothing about this, the pressurizer will eventually fill. And since the positive displacement pumps are in action here, they will provide enough pressure to open the PORVs and pass water through the PORVs. And now you have a question of whether or not they can meet the ANS criterion that prohibits the escalation of an AOO into a more serious event.

So, we asked for this analysis, and the licensee stated that if this should occur, if a PORV should open, that the operator will be able to close the PORV very quickly. It's a prompt action, and we've seen it demonstrated for us at a simulator at Turkey Point for another application for the Turkey Point EPU. And in that demonstration, the operator closed the PORV in nine seconds. And if the PORV does not close, then there's also the manual block valve.

From the analysis the licensee provided we saw that if there is no operator action the safety injection signal will be generated in less than two minutes, and the pressurizer will fill in less than seven and a half minutes. And then we have what is essentially a small break LOCA at the top of the pressurizer.

MEMBER STETKAR: Sam, I'm missing something here. And, again, I have to apologize because I wasn't at the Subcommittee meeting, but if the PORV is stuck open why do I care about pumping open the PORV? I mean, if I have a LOCA already, why do I care about filling the pressurizer and causing a LOCA?

MR. MIRANDA: Okay. The sequence is the pumps, in this case the positive displacement pumps, fill the pressurizer and pressurize the RCS --

MEMBER STETKAR: No, because the PORV is open. That's the first thing that's open. If the operator closes the PORV it's all over. If he leaves -- doesn't close the PORV, I seem to have a hole in the top of the pressurizer. I don't know why it's -- why I care about that.

MR. MIRANDA: Okay. If the PORV is inadvertently opened and it passes steam, and the operator has the option of closing the PORV, no problems. Once the PORV passes water, he may not be able to close the PORV.

MEMBER STETKAR: Got that. So, this would only be a concern if, indeed, the operator closed the PORV?

MR. MIRANDA: This would be a concern if the operator does nothing.

MEMBER STETKAR: Once it's open, it's open.

MR. MIRANDA: It's open.

MEMBER STETKAR: Once it's open, it's open. It pretty much doesn't care after that point whether it's passing water or steam unless you're presuming that it suddenly gets smart and decides to close by itself. Once it's open, it's open.

MEMBER BLEY: I guess I'm in the same boat.

MEMBER STETKAR: It either has to go

reclose somehow and get pumped open with water.

MS. GALL: Well, I think this is being looked at for an AOO not becoming a more serious event.

MEMBER BLEY: Where did it become more serious?

MEMBER STETKAR: I don't know why it became more serious. I understand the spurious SI one, the previous one. I got all of that.

MEMBER BLEY: But this, effectively, even though it's an AOO, it's effectively a small LOCA as soon as it happens, unless it goes closed again.

MR. MIRANDA: The difference is the discharge of water versus steam. As long as the PORV is discharging steam, it's an operable PORV. It could get a signal to reclose. If it gets smart, it can reclose, or the operator can close it manually. But once it passes water we don't know -- we can't assume that the PORV will operate any more. Once it passes water, it's not qualified for water discharge. It's open and stays open, and now the slow break LOCA.

MR. HALE: Hi, this is Steve Hale, Florida Power & Light. We need to clarify, this is not a PORV failure. What it is is you have an inadvertent actuation. It pops open all of a sudden, so your

actions are to close the valve. Okay? If you can't close the valve, then you close the block valve. These valves are designed for steam release. They're designed to open when the pressurizer pressure goes up and they relieve steam, so they're designed for that. The progression is if it goes to water relief where the valves are not designed for water relief. And then it's to what Sam is saying, you have essentially a small break LOCA through the top of the pressurizer.

MEMBER SHACK: So, he's got 7.5 minutes that the valve will respond to him.

MR. HALE: To close the PORV. If he can't close the PORV, then he would close the block valve.

MEMBER SHACK: Then after that he can't close it any more.

MR. HALE: But the sequences you're looking at under an AOO are like your pressure controller goes haywire, and it causes the valve to pop open, or the valve inadvertently opens which we've never had happen, things of that sort. So, you look at it from an AOO standpoint and you just don't want it to progress to a situation that's worse.

MEMBER BLEY: I guess I'm still confused. Once you get to the two minutes and you get the SI, then unless you turn off the SI pumps you're going to

--

MEMBER SIEBER: You're going to keep pumping.

MEMBER BLEY: You're going to keep pumping whether that valve goes shut or not. If it goes shut, then you're going to be on the safety valves if you shut the block valve.

MR. HALE: Yes, but it falls in line very similarly to the inadvertent SI, as well. You'll have to turn off the SI. Okay? You'll cut -- go ahead.

MR. HORTON: Todd Horton, FPL. You're correct. When the PORV opens and the pressurizer starts to lower RCS pressure you are going to get just like Sam said an actual safety injection. That's not an inadvertent safety actuation. That's a real safety --

MEMBER STETKAR: It's doing what it ought to do.

MR. HORTON: I think what we're really discussing here is a difference in classification in the events. If the operator closes the PORV or isolates the block valve and terminates that event at that point, that's your AOO.

MEMBER BLEY: Yes, but he's got to do it before two minutes.

MR. HORTON: That's right. Now, I will say this, our operators -- this is an activity that's routinely trained in our simulators. We are a sister plant to Turkey Point. I'm very confident in our performance. We talked about this in detail during our Subcommittee meeting on this specific event. But you're correct. What it is is just really a discussion point on the classification event.

If the PORV opens and you have a steam space release and RCS pressure is lower, and you get a real safety injection actuation, and the plant should respond accordingly. Now, in response to that we would enter our emergency operating procedures and we have specific criteria to take control of that safety injection actuation --

MEMBER BLEY: That's going to be about 10 more minutes before you --

MR. HORTON: Prior to filling the pressurizer solid --

MEMBER BLEY: Well, once this comes on if you shut it before water gets there you still don't want the guy turning off SI without going through that procedure.

MR. HORTON: That's right.

MEMBER BLEY: And by then he would have

been solid.

MR. HORTON: That's right. That is a valid safety injection actuation at that point, and we have specific procedural guidance for that. I think what Sam is alluding to is the inadvertent opening of the PORV. The operator would take the action, close or isolate the PORV and terminate the event.

MEMBER BLEY: So, as long as he does it within two minutes --

(Simultaneous speaking.)

MR. HORTON: Once you get a safety injection actuation it's real safety injection actuation event, yes.

MR. MIRANDA: That's why we have the two times on the slides. If the operator can act before 10 minutes it's very simple. The event is terminated once he closes the PORV.

MEMBER BLEY: I've kind of lost the thread. What's the whole point of showing us this?

(Laughter.)

MEMBER BLEY: Is there some debate here other than what we just got into?

MEMBER CORRADINI: I think you caused the debate internally.

MR. MIRANDA: Well, we're showing you this

because this is something that is relatively new. It came up in terms of the review of the accident analyses. We've normally -- traditionally, we have not gone past the point of reactor trip for the inadvertent opening of a PORV. The reactor trips. We're satisfied that there's no DNB, and the accident review and the analysis is over.

We looked at it past the point of reactor trip and we saw that since we have depressurization continues, and it will continue until the operator shuts the PORV or closes the block valve. And if the operator does not act quickly enough, he will get a safety injection signal, a valid one. And this can lead to opening the PORVs and passing water through them. And this is what we're looking for -- what we have always been looking for in the inadvertent SI actuation. And it turns out that this particular scenario is worse than the inadvertent SI actuation because it's less time available.

MEMBER ABDEL-KHALIK: I mean, so what? The plant is analyzed for this scenario.

MR. ULSES: This is Anthony Ulses, Branch Chief of Reactor Systems. The question here is one of guidance. Our guidance does not address this situation right now. We discovered this what, a year or two ago,

Sam, so the point is we're working on generic communication to identify this as an event that needs to be addressed in accident analysis. But in the interim, we're asking licensees these questions, and our conclusion based on the results is that we have reasonable assurance that the plant will respond as designed. However, there are some situations where this may not be the case, and we will look into them as they come in front of us.

MEMBER BLEY: My last mumble is it's already responded its desire and it's taking care of --

MR. MIRANDA: We're looking -- we're in two different dimensions here. We have the real world where the operator closes the block valve, no problem. We had a small break LOCA at the top of the pressurizer. It's an isolable location. The operator closes the block valve, the event is over. That's the real world.

In licensing space, he's violating the ANS acceptance criterion. The criterion that they have committed to satisfy in their licensing basis. They were never supposed to get to that point in the first place according to the licensing criteria.

(Simultaneous speaking.)

MEMBER BANERJEE: Okay. I think we need to move on.

MR. MIRANDA: This is the transient that we were talking about. At the audit we covered in detail the feed line break and the inadvertent opening of a power operator relief valve, and the analysis of the CVCS malfunction, and we also looked at the loss of electrical load. And this is a question that comes up repeatedly in EPU analysis reviews. This is an over pressure analysis in which the Standard Review Plan specifies that the reactor trip that is credited would come from the second safety grade trip, not the first. And we have verified that St. Lucie has taken credit for the second reactor trip, which is a high pressurizer pressure trip. The first reactor trip was a low steam generator level trip. That was not credited. They waited for the high pressurizer pressure trip, and achieved acceptable results which is a peak pressure of less than 110 percent of design pressure. And then we also looked at the realistic large break loss of coolant accident that Jennifer will cover. Any questions?

MEMBER BANERJEE: That's good, Sam. Let's move on.

MS. GALL: I'll be covering our LOCA

review. For the large break, the licensee implemented AREVA's EMF-2103, the realistic large break LOCA methodology for PWRs. It's a best estimate code that uses a statistical method based on order statistics to produce an estimate of the upper tolerance for the predicted peak cladding temperature consistent with a high level probability statement in 50.46. It also produces an upper tolerance limit estimate for the maximum LOCA oxidation, as well as the hydrogen generation.

As we discussed quite extensively in the Subcommittee meeting, the plant-specific analysis did contain several modeling assumptions that are more reflective of data than the NRC approved model, so they differ slightly from the originally approved EMF-2103.

For the small break LOCA, they used EMF-2328. And, again, with the small break LOCA there were analysis and modeling assumptions that were more reflective of data and plant phenomenology than the originally NRC approved evaluation model.

Both the small break and large break produced acceptable results with regard to 50.46 limits.

MEMBER BANERJEE: In the Subcommittee

meeting there was some question as to using only 59 runs rather than 124, or whatever that number was, if you recall, which means --

MEMBER SHACK: The approved methodology used 59 runs.

MEMBER BANERJEE: Yes, so we accepted it. So, everybody else now uses 124 or something.

MS. GALL: They do 59 runs assuming no loop, and 59 assuming a loop.

MEMBER SIEBER: 59 is 95 --

MR. ULSES: Actually, Dr. Banerjee, this is Tony Ulses, Branch Chief.

MEMBER BANERJEE: Yes.

MR. ULSES: I would think that the reason that you're getting that is really that the methodologies, in this case you're referring to another vendor's methodology, but they're asking a fundamentally different -- well, they're asking a slightly different question --

MEMBER BANERJEE: It's the same problem, though.

MR. ULSES: -- which leads to a larger set of cases. I don't want to get into proprietary information here.

MEMBER BANERJEE: That's also being vague.

I don't want to speak about it in detail. Anyway, the Subcommittee at the end was okay with it, I think.

MEMBER POWERS: One of the -- I mean, you indicated they used order statistics. So, to some degree some sort of Monte Carlo sampling here of some uncertain variables.

MS. GALL: Yes. There's a range of variables that are sampled over the range of the either operating statistics or the tech spec ranges.

MEMBER POWERS: And there is -- so you've looked at these ranges and they're appropriate ranges.

MS. GALL: Yes.

MEMBER POWERS: Are the variable they're sampling independent?

MR. PARKS: Dr. Powers, this is Ben Parks from the NRR staff. I think that the foundation of the methodology is those variables are not independent, so they are sampled randomly sort of provide a representation of how these -- the different variables behave all at the same time. And that's the point to sample all -- I think it's about 30 inputs with 59 or however many required cases concurrently.

MEMBER POWERS: But if they're not independent, and you don't sample them in a correlated fashion, you're not getting an actual representation

of your distribution.

MR. PARKS: I'm sorry, could you say that again, please?

MEMBER POWERS: If you're sampling them as though they were independent, when in fact they're correlated, then you're not getting an appropriate characterization of the distribution of the uncertain outputs.

MR. PARKS: It's not imperfect, certainly. I think the idea is to get a whole bunch of different snapshots with the idea that it's a --

MEMBER POWERS: You're getting it flat wrong is what you're getting at, and you're vastly underestimating the range of uncertain outputs you will get, because those that go high on you together will produce a result that's either high or low. And those that go low together will produce a result that's either low or high. And the distribution is much wider than what you're actually predicting is my estimation, my guess.

MEMBER STETKAR: And if you're assigning a confidence -- a 95 percent confidence that you're within a certain range of results, you're actually not 95 percent confident that you're within a certain range. The range may well extend further than 5

percent beyond what you're measuring. And that's just a mathematical fact.

MR. DUNN: Mr. Chairman, Bert Dunn, AREVA.

CHAIRMAN ARMIJO: Yes?

MR. DUNN: Could I take a shot at that?

CHAIRMAN ARMIJO: Yes, go ahead.

MR. DUNN: The parameters are largely independent, and certainly the key and most important parameters such as the heat transfer, the power, the local linear heat rate is that, and sample that. The break flow that's used there, the setting -- well, those I would say would be the most important ones. The decay heat level, for example, is not sampled in this case, but if it were, it would be independent of the others.

CHAIRMAN ARMIJO: Which are the variables that are correlated?

MR. DUNN: Excuse me?

CHAIRMAN ARMIJO: Some of these variables move in tandem, they're correlated. Which are they?

MR. DUNN: Some of the variables are tandem correlated?

CHAIRMAN ARMIJO: Yes. I mean, that-- they move in the same direction at the same time, so they're not independent of each other. And are there

many, and are they important?

MEMBER BANERJEE: They're not supposed to be. They're supposed to be independent.

CHAIRMAN ARMIJO: Well, I know they're supposed to be, but if they aren't, in the physical world --

MEMBER BANERJEE: It's like the levels in the accumulator tank or whatever the uncertainty, and this is typically what you do. Right?

CHAIRMAN ARMIJO: Well, if they're truly independent then we don't have an issue.

MEMBER BANERJEE: They're supposed to be.

CHAIRMAN ARMIJO: But they're telling us --

MEMBER BANERJEE: What we're hearing is a surprise, so tell us where they're correlated.

CHAIRMAN ARMIJO: That's my question.

MEMBER BANERJEE: Yes. What is correlated?

MR. PARKS: Perhaps I was mistaken when I said that they were largely dependent. I think that Bert's answer is more accurate.

MR. DUNN: If you look at what the controlling parameters, the local power, the heat transfer you're going to apply, the flow rate out to break, and -- I mean, that's break size basically. And

for this plant it would be the temperature difference between the hot and the cold leg because that sets the flow parameters during blow down which is where the critical -- or which is where the temperature -- maximum temperature occurred for the plant. Those are independent.

CHAIRMAN ARMIJO: Okay.

MR. DUNN: Now, there's about 22 because we froze some of the things in this such as the initial power of the plant was frozen, the decay heat was frozen to a thing. Our normal procedure would have 30 parameters sampled, some of those are plant, some of those are phenomenological. And I can get -- no, I don't want to say that. Those are the ones I mentioned are the ones that I think consider control. Pressurizer level has a small impact. It is sampled. That's one of the ones that's not terribly important.

MEMBER POWERS: It's not obvious to me that the flow out to break and the temperature would be independent, but I can be wrong.

MEMBER BANERJEE: Well, the flow out of the break could be correlated with the cold leg temperature if it's a cold leg break.

MEMBER CORRADINI: But it's mainly the area I would assume is --

MEMBER BANERJEE: Mainly the area, which is the -- well, okay. Let's move on.

MS. GALL: So, we started discussing some of the observations we had about the large break. We've identified that it is a blow down PCT, and the break size is one of the largest impacts for PCT.

There was also a question during the Subcommittee about the dispersed film boiling heat transfer coefficient, and we looked at the coefficient with respect to the predicted PCT. And there's a fairly wide range of coefficients used, and the limiting cases were not -- they were varied. They were not clustered over a single point.

The small break observations. As the licensee discussed earlier, they made some accumulator pressure adjustments to optimize their small break. The licensee, there was some question at the Subcommittee as to which analysis was going to be the analysis of record. They provided a letter confirming that the May 27 submission would become the analysis of record. And I believe a lot of the loop seal clearing treatment is proprietary, if we want to discuss that.

MEMBER BANERJEE: We cleared up that problem now.

MS. GALL: Yes.

MEMBER BANERJEE: Okay.

MS. GALL: The licensee provided an additional response for the loop seal clearing which I think you all have been provided. So, if we need to discuss more specifics there, I think that needs to be in a closed session.

MEMBER BANERJEE: Okay. Is there any interest to discuss this amongst the Committee? Of course, the results are sensitive to loop seal clearing, as you would expect.

MEMBER POWERS: So, you do the analyses separately for whether the loop seals are in tact or clear?

MS. GALL: What they've done is the -- I don't remember how much is proprietary and how much is not.

MEMBER BANERJEE: That's up to you. We can close the meeting if you are interested to pursue it.

CHAIRMAN ARMIJO: If a member wants to do that, we'll close it.

MEMBER BANERJEE: Certainly.

CHAIRMAN ARMIJO: Do you want to pursue it, Dana?

MS. GALL: Does AREVA want to take a stab

first?

MEMBER POWERS: At an open answer?

MEMBER SIEBER: Yes.

CHAIRMAN ARMIJO: An open answer, that will work.

MR. DUNN: Bert Dunn, again, AREVA. I did not hear Dr. Powers' question exactly, but unless you're going to go into the nitty gritty of how we decide which loop seal clearing pattern to follow, you probably will not get into proprietary area.

MEMBER BANERJEE: Why don't you just tell him what the effect of the various loop seal clearing is, and that's just a result, not how you do it precisely.

MR. DUNN: Should I take a shot at that?

MEMBER BANERJEE: Yes, let's do that.

MR. DUNN: Well, the effect of multiple -- the difference between single loop and two loops clearing on a small break loss of coolant accident can be thought of as 200 to 300 degree affect on the peak cladding temperature, in general. With one plant to another plant different sizes of pipes and stuff like that, that has to be switched over. But the difference between one and two loops clearing is relatively important. The difference between two and three loops

clearing is not relatively important. So, what we try to do, or what we do, we don't try, we do is to control to sync the accident evaluation so that only one loop clears, the lower break -- for a break size that is larger than one we really expect only one loop to clear. So, we've got the decision in there that says okay, we're going to pick a break size where we think one loop will clear. For breaks that are bigger than that, we will make sure we only clear one loop.

MEMBER POWERS: I understand what you're doing now.

MEMBER BANERJEE: Is that okay?

MEMBER POWERS: Yes.

MEMBER BANERJEE: All right, thank you.

MS. GALL: And then for conclusions, the evaluation models that the licensee implemented, they have addressed concerns the NRC had with those evaluation models to do more -- to use inputs and models that were more reflective of data than the currently approved versions. And the results demonstrate compliance with 50.46.

MR. ULSES: This is Tony Ulses, Branch Chief Reactor -- Dr. Banerjee, you have a very specific question on the liquid hold-up in the U-tubes. I know we provided you some information.

MEMBER BANERJEE: Yes.

MR. ULSES: Did that answer your question, or do you --

MEMBER BANERJEE: Yes.

MR. ULSES: -- have some additional --

MEMBER BANERJEE: No. I think they answered —-- Len sent me --

MR. ULSES: Okay. I just want to make sure we answered your question before we move on to the next section.

MEMBER BANERJEE: Yes. Just for -- so the Committee knows, I was concerned about the possibility of flooding. In other words, having liquid held up in the steam generators. Due to the EPU, you get higher steam velocities in the refluxing mode, so I wanted to know what the velocities were, whether they're flooded. And Len did an evaluation and sent me a note, but the Subcommittee can have it if it wishes. It's to do with the Kutateladze correlation which he used, so that it was -- if there was flooding, it would be for very brief periods for certain break sizes. And the core uncovery was not going to be for any prolonged period based on that. But for any members of the Subcommittee, I'm happy to -- Weidong can make copies of the email. Weidong also did an independent analysis

of this using some other data. I'm satisfied, don't need any more.

MR. PANICKER: This is Matthew Panicker, Nuclear Performance and Core Review Branch of Safety Systems. The last Subcommittee meeting, Paul presented extensive number of slides how TCD affects certain mechanical and thermal aspects of the performance of the fuel. And today present some concurring remarks on the --

CHAIRMAN ARMIJO: Matthew, you have to speak a little louder --

MR. PANICKER: -- TCD. The maximum impact of TCD are on three thermal mechanical performance of the fuel, one is power to melt, fuel centerline temperature, cladding strain or cladding fatigue, and end of life rod internal pressure. Upon the reviewers of the -- the fuel part reviewer was RAI based on TCD and its affect on all these parameters. AREVA and the licensee has performed analysis, benchmark analysis with RODEX2 which is the original code and which doesn't have TCD with burnup. And, also, the staff performed FRAPCON 3.4 calculations which is a statistical plus -- it's a code which has got TCD with burnup. And we presented during the Subcommittee meeting that the RODEX -- the AREVA introduced what we

call augmentation factors or penalty factors for power to melt or fuel centerline max temperature and cladding strain, and both these cases the fuel -- the same criteria was met.

On power to melt temperature, depending on the content of the gadolinium, the certain temperature resided, the range was 450 degrees to 100 degrees depending on -- 450 degrees Fahrenheit for UO2, pure U02, and 100 degrees Fahrenheit to 8 percent gadolinium content.

MEMBER ABDEL-KHALIK: Now, you heard the earlier discussion about these augmentation factors.

MR. PANICKER: Yes.

MEMBER ABDEL-KHALIK: And by segregating the data for different linear heat rates, we're not sure if these augmentation factors would be applicable at 62 gigawatt days per ton for high linear heat rates. What is your answer to that?

MR. PANICKER: What is -- high linear heat rates. As the fuel burns, as it burns the linear heat rate is not going up.

MEMBER ABDEL-KHALIK: Well, okay. For high centerline temperatures, let's say greater than 1,250 Kelvin.

MR. PANICKER: This goes ---I just got them

and I have not the chance to read -- I don't have the associated --

MR. ULSES: This is Tony Ulses, the Branch Chief of Reactor Systems. Let me just take a stab at the question. If we need to get Paul Clifford on the phone, we can tie him in. He's available this afternoon. Essentially, the staff position on this, and I'm sort of reiterating what I've been -- I've been kind of BlackBerrying back with Paul over the last hour, is that we have several factors going on here.

First of all, the AREVA methodology did not take credit for the burn down of the pin as a function of exposure. And we also -- looking at the results for the large break LOCA analysis for St. Lucie Unit 1, there is a large margin in acceptance criterion. And when we look at our FRAPCON calculations, and I'm going to kind of repeat what Paul told me. It's his position, and if we need to get him on the phone, he can also repeat this, that when we account for thermal conductivity degradation in the FRAPCON models using, obviously, the same database that everybody else has access to, and all of the other models that are in FRAPCON, and which are designed to be best estimate models of the relevant

phenomena, if we had a large discrepancy in the ability of FRAPCON to make predictions at these higher burnups, it would be demonstrated as some of the other comparisons. In other words, that most likely go awry. And that's the staff's position on why we have reasonable assurance that application of this methodology at the St. Lucie Unit 1 EPU is acceptable at the moment.

MEMBER BANERJEE: Let me ask you a question here. The data that's shown there is clearly what is available. That means that high burnups, there isn't any data with high fuel centerline temperatures. That's really what it amounts to. The question really is during any of the calculations which are being done are there at high burnups or whatever reason fuel with high centerline temperatures which are being -- as part of the calculation some form of extrapolation is being made on these curve fits. Really, that's the issue. Do I make myself clear, or should I repeat the question?

MR. ULSES: I understand the question.

MEMBER BANERJEE: Yes.

MR. ULSES: Let me see if I can put a little spin on it. The question, ultimately, is as analyzed or in reality?

MEMBER BANERJEE: No, as analyzed clearly, because it -- also in reality, hopefully the analysis and reality correspond to each other in some way.

MR. ULSES: I'm going to ask Matt if he can address that, and also perhaps AREVA would have -- offer some comments on it.

MEMBER BANERJEE: So, really what I'm asking, and I think everybody is asking, Said is asking, is in the analysis that has been done, are there high burnup fuels in the analysis, or would there be high burnup fuel as part of the analysis which has a high centerline temperature. So, in that case, we're outside the range of the data. If so, we should simply say that, and say that we've extrapolated. Now, whether it's a good extrapolation or not is a separate matter, but you can at least be honest and say we extrapolated, that's it.

MR. ULSES: Actually, I'm going to ask Ben Parks to address the question for LOCA. He was involved in the LOCA analysis in detail. Let me step back here.

MR. PARKS: For the large break LOCA calculations they do -- originally per generically approved EMF-2103 they do a first cycle calculation, and I believe burnup is sampled. We had some issues

when TCD started getting a three letter acronym and becoming an official problem. We asked them to start looking at second cycle fuel. And they do that out to about 20 some gigawatt days per ton, I believe. And it results in, as Bert said earlier, they may postulate high linear heat rate fuel conditions at about 45 gigawatt days per ton total, so there is some extrapolation there.

As a result, the results that they provided in the explicit analysis for the second cycle fuel were about 50 degrees lower in PCT due to other effects associated with the second cycle or the particular parameters that were that case for the second cycle case set. Is it possible that if you restratified these data and corrected differently that a higher PCT could be predicted, certainly. However, this is an interim solution right now, and their predicted PCT is 1,600 and some degrees. It has ample margin to regulatory limits, so granted this is the first that I've considered looking at the data the way that Dr. Abdel-Khalik has proposed, but my initial reaction is I think that this application is okay.

CHAIRMAN ARMIJO: Well, let me ask it a different way. If -- has the staff extrapolated in the same way as AREVA in incorporating the thermal

conductivity degradation data into your analysis code?

MR. PARKS: That I'm afraid I can't answer.

CHAIRMAN ARMIJO: But, you know, we all start with the same data.

MR. PARKS: Right.

CHAIRMAN ARMIJO: And we all try to get a temperature. And --

MEMBER SHACK: Well, the question, though, is if you're extrapolating an empirical fit it's one thing. If you're extrapolating a mechanistic model it's a little different.

CHAIRMAN ARMIJO: There's not much mechanistic in thermal conductivity.

MEMBER SCHULTZ: Except for LOCA, the staff's analysis has been depending upon the computer codes that have the thermal conductivity degradation incorporated in them. There is no correction factor, augmentation factor, or provision. You're actually using a code. My question is to what extent are we relying upon the staff's analysis versus the licensee's analysis.

CHAIRMAN ARMIJO: Well, if they're the same, they get the same results for the same --

MEMBER SHACK: But if the staff's analysis is basically an empirical correction built into a

computer code, it still has the same problem. If it's a more mechanistic picture, or they somehow adequately accounted for the uncertainties that they've introduced, that's a different thing. I mean, it's a little hard to answer that question --

CHAIRMAN ARMIJO: They have to answer that.

MEMBER SHACK: Absolutely.

CHAIRMAN ARMIJO: And the staff has to answer whether theirs is mechanistic when treating thermal conductivity. My guess is --

MEMBER SHACK: Probably not.

CHAIRMAN ARMIJO: I won't guess, but I think the -- in the real world the question I'd like to ask AREVA and the staff, can you your peak LHGRs or something of the order of 14-7 with a new core kilowatts per foot, and can you have powers in that range, maybe not that high, 12 kilowatts per foot, 11, can you have that at burnups in excess of 30,000?

MEMBER BANERJEE: Maybe you can phrase it a little differently, which is --

CHAIRMAN ARMIJO: Phrase it any way you want.

MEMBER BANERJEE: Yes. No, what basically Said is saying, I think this is relevant, is he's saying that there are two effects on thermal

conductivity. One is burnup, the other is temperature. Right? And when you go to these higher heat fluxes you get higher temperatures. Now, all the data that you're seeing here is basically relatively low temperature data at the higher burnups.

Now, if you are doing calculations which entail the use of this correlation at higher temperatures, because at the end it's the thermal conductivity as a function of temperature and burnup that you want. I mean, all this is hand waving other than that. Okay? The curve fits here and there, but that's really what you're talking about. So, what this is indicating is that there isn't much data on the effect of temperature as well as burnup.

Now, if it can be demonstrated that when you plot the thermal conductivity versus temperature with burnup that all burnups sort of converge to -- the effect of burnup is reduced as you go higher in temperature, then we may be able to buy this, but you have to put it together in that way. And if it isn't, if there's a lot effect of temperature, I mean --

MEMBER POWERS: You don't have the data to--

CHAIRMAN ARMIJO: We've been presented with data --

MEMBER BANERJEE: We don't have the data.

CHAIRMAN ARMIJO: -- just exactly like you asked for in -- but I'm not sure if it was presented by AREVA or someone else.

MEMBER SCHULTZ: We've seen in the presentations of thermal conductivity versus burnup and temperature.

CHAIRMAN ARMIJO: Right, we have had those charts showing exactly what you're saying. The thermal conductivity penalty decreases with temperature.

MEMBER BANERJEE: If it does, then great.

CHAIRMAN ARMIJO: But I think the staff has--

MEMBER BANERJEE: Have to demonstrate that. Right?

CHAIRMAN ARMIJO: Well, the licensee has to demonstrate it.

MEMBER BANERJEE: Or whoever, somebody has.

CHAIRMAN ARMIJO: The staff has to confirm that it's okay.

MR. PANICKER: That's why we added the augmentation factors to the fuel melting temperature for the power to melt the fuel.

CHAIRMAN ARMIJO: Well, it's up to the staff, but Paul might be able to --

MEMBER CORRADINI: That's what I was going to ask. I was going to say can we get him on the line.

CHAIRMAN ARMIJO: If you can, that would be helpful.

MR. BROADDUS: Yes, we're calling him right now to get him on the line.

MEMBER SIEBER: Well, this not only affects this plant, but it affects every plant.

CHAIRMAN ARMIJO: Well, it's generic, sure.

MEMBER BANERJEE: The reason also, I talked —-- the tendency of this to deviate with burnup, if I remember reduced as you increased temperature, but I could be wrong. Somebody needs to look at this in a systematic --

CHAIRMAN ARMIJO: But the driver is linear heat generation rate. And if you just can't get it hot, the thermal conductivity penalty gets smaller, and smaller, and smaller.

MEMBER BANERJEE: That's a separate issue, though.

CHAIRMAN ARMIJO: No, that's the way --

MEMBER BANERJEE: Yes, but that's the data. I mean, you couldn't get the data for that reason, but there could be scenarios where you've got situations where the temperature is high and the burnup is high.

MEMBER ABDEL-KHALIK: Just for your reference, data for centerline temperature greater than 1,250 Kelvin, which is 1,823 Fahrenheit, anything beyond that doesn't go above 30 gigawatt days per ton. Now, 1,823 degrees Fahrenheit centerline temperature doesn't take 14-1/2 kilowatt per foot to get there for a PWR. It probably corresponds to 10 kilowatt per foot. So, the argument that we're only sampling a very small part of the core where the linear heat rate is very high at these very high burnups doesn't hold up.

CHAIRMAN ARMIJO: Well, that was the question, do you -- are you in that range or not? And that's a question --

(Simultaneous speaking.)

MEMBER SCHULTZ: Achieve that temperature when the gap is open.

CHAIRMAN ARMIJO: Right.

MEMBER SCHULTZ: Now when you have --

CHAIRMAN ARMIJO: When you close the gap, those temperatures drop.

MEMBER SCHULTZ: -- a closed gap with high conductivity.

MEMBER BANERJEE: Unfortunately, if you look at these curves you could easily bias it and draw lines like that, you know. And this is a position that

we took when we were outside the range of the data for MELA+, if you remember. We were not very anxious to extrapolate. So, we need to know how much --

CHAIRMAN ARMIJO: Remember the temperatures in a fuel rod is affected by a lot more than the thermal conductivity of the pellet. And that's what Steve is trying to tell us. As you get to burnup you've got a lot of things going on. And that's why I think we need to get Paul on the line.

MR. MIRANDA: And that's why the experimental data is not where you might like it to be. It's the fuel rods that are in the experimental facility don't go to high temperatures because the conductance of the gap is very high.

MR. CLIFFORD: Hello, Paul Clifford.

MR. MIRANDA: Hey, this is Sam Miranda, and the entire ACRS calling you.

MR. CLIFFORD: Hello, everybody.

MR. MIRANDA: We have some questions for you.

CHAIRMAN ARMIJO: I would just like to ask in the sense that the staff has confirmed or accepted the AREVA analysis for fuel temperature as affected by thermal conductivity degradation, and Said has raised an issue of whether that is valid in view of the fact

that there's very little thermal conductivity data or hardly any at high powers for high burnup fuel. And the question then is are you deliberately or inadvertently extrapolating way beyond your database in coming to the conclusion that it's acceptable? And maybe that's -- you may want to rephrase it, but the bottom line is, is the approach taken by AREVA in incorporating the effects of thermal conductivity degradation okay, and why does the staff conclude that?

MEMBER ABDEL-KHALIK: Paul, let me be a little more specific. For centerline temperatures above 1,250 Kelvin, which is 1,823 F, there are no data for this augmentation factor, no data that would support the evaluation of the augmentation factor for burnups beyond 30 gigawatt days per ton. And that means that if your fuel design limit is 62 -- if you're authorizing them to have a fuel design limit of 62 gigawatt days per metric ton, that implies that you're extrapolating way beyond the database. And the question then would the empirical fit of the augmentation factor which is by and large based on low linear heat rate data in that range of burnup be applicable for high linear heat rate conditions?

MR. CLIFFORD: I understand the question.

I guess I'd first like to summarize my review, and then we'll get on to specific questions. Can everybody hear me?

CHAIRMAN ARMIJO: Yes.

MR. CLIFFORD: Okay, great. You know, we've been looking -- we're in the process of going through our review of the augmentation factors that AREVA developed, and we've done an audit of their calculations that we've run from preliminary numbers, and we have a certain level of comfort. Of course, that review continues, and over the next six months we'll be doing more of an in-depth review of the augmentation factors and issuing -- basically, issuing acceptance of those augmentation factors on a generic basis. And as I mentioned in the Subcommittee, any changes to those augmentation factors that occurs between now and the end of the year will be incorporated in St. Lucie 1.

We also ran some St. Lucie 1 specific FRAPCON cases, so we have another level of assurance that the fuel rod design for St. Lucie 1 meets its design requirements based upon our confirmation calculations. With respect to the question at hand, yes, I understand certainly if you drive a rod really hard at the end of life at high burnup you're going to

get more fission gas release. It's going to have different centerline temperatures, thermal conductivity is going to come into play, but the data is what the data is. And we really expect that fuel rods above 30 gigawatt days are going to be operating at extremely high temperatures. We really don't. So, there is a limitation on the data, I agree. We have FRAPCON for all the data we have at hand, and if there were some unusual phenomena that would creep in at very high linear heat rates and at very high burnups that weren't captured by the data that affects centerline temperature, then that would also creep into other predictions for which we have a lot more data. Like, for instance, fission gas release, there's a very extensive database on fission gas release. And we're all turning to that, so FRAPCON and all the modern codes are turning to that also. So, if our thermal conductivity models were somehow off as a result of a lack of data, then that would have affected our fission gas release model, so we would have seen it there.

CHAIRMAN ARMIJO: And cladding strain.

MR. CLIFFORD: And we're just not seeing it.

MEMBER CORRADINI: May I ask Paul a

question? So, Paul, just so I -- what I heard you just say in terms of your summary, can I just reverse it? What I think you're saying is it's almost mutually exclusive to have high linear heat rate, and high temperature at the end of burnup life. Rather, you would essentially evolve to low linear heat rate and lower temperatures because the thing you can't drive the rod that hard. Am I misunderstanding?

MR. CLIFFORD: That's correct. You're depleting your U235, so the rod power tends to go down. In addition, the -- for BWRs there's a specific tech spec on linear heat rate as a function of burnup that's based on fuel mechanical design, specifically a rod internal pressure calculation. For PWRs, there's not an explicit COLA or tech spec, but there's a reload design checklist value where you have linear heat rate limits as a function of burnup that they develop fuel management to. And those limits clearly show -- basically, the meat of the curve is around 28 or 30 gigawatt days, and that drops substantially from that point forward.

MEMBER BANERJEE: Paul, can you give us some numerical values as to how much they drop to?

MR. CLIFFORD: I could certainly provide that to you.

MEMBER BANERJEE: That would be helpful.

MR. CLIFFORD: I'm just trying to think off the top of my head where we would have shown you that. It's unfortunate, I have one in front of me that we're going to be showing you for St. Lucie 2.

CHAIRMAN ARMIJO: That won't help.

MEMBER BANERJEE: But any indication qualitatively would help. Obviously, if over 30 megawatt days per ton, or 30,000, or whatever gigawatt days, then if the linear heat rate is half that or something of what it is at the beginning of life, that would a useful thing to know.

MR. CLIFFORD: Right. It would be -- consider it -- I mean, the numbers would be roughly 13.2 kilowatts per foot at around 30, and then dropping all the way down to 7 kilowatts per foot.

MEMBER ABDEL-KHALIK: Well, at 13 kilowatt per foot, I can imagine a centerline temperature much greater than 1,800 F.

MR. CLIFFORD: Well, that's an unusual -- let me think. That's kind of a bounding case where you're trying to provide fuel management flexibility. As soon as you come up with a bounding allowable rod power history that doesn't mean you're ever going to have a rod that gets there.

MEMBER ABDEL-KHALIK: Well, it all has to fit together. If you're setting a limit of roughly 13 kilowatt per foot at 30 gigawatt days per ton, and you look at the centerline temperature, it will be greater than the range for which there is thermal conductivity degradation data, namely, 1,823 Fahrenheit.

MR. CLIFFORD: That might be so, yes.

MEMBER SHACK: But maybe we are distorting -- I mean, we're looking at errors in your plots. And if we look at the total conductivity as a function of burnup and temperature, what we see is that the effect of burnup decreases as temperature increases, so that although we can't predict it as well, the effect isn't as large.

MEMBER BANERJEE: That's the question I was asking.

MEMBER SHACK: Yes.

CHAIRMAN ARMIJO: Well, that's a chart that Paul may be looking at, but we've received it, but the effect as a function of burnup is --

MEMBER BANERJEE: We received it, but I don't recall it.

MEMBER SHACK: I've got an illustration of it in front of me.

MEMBER ABDEL-KHALIK: But that's a cartoon.

We don't have data to support that graph.

MEMBER SHACK: I think that overall trend is supported by the data.

MR. CLIFFORD: When you're looking at end of life, second cycle, third cycle design criteria, you're not really looking at that centerline melt during an AOO, because that's going to occur in the highest power --

MEMBER ABDEL-KHALIK: We're not looking at that.

MR. CLIFFORD: What you're looking for there is your end of life criteria is really rod internal pressure, which is driven by void volume and driven by fission gas release. And as I mentioned, these codes are tuned specifically to capture the fission gas release and the void volumes, so even if -- it kind of goes back to the argument we had with -- when we were talking about Turkey Point. I don't know if you remember, that the thermal conductivity model was incorrect at high burnup, but it had been tuned to an extent to the high burnup fission gas release database. So, even if the conductivity was wrong, it was artificially compensated for by the fission gas release model. So, at the end of the day it was able to actively predict the fission gas release and the

void volume, and then the end of life rod internal pressure factor.

CHAIRMAN ARMIJO: So, if you look at the totality of the data that you have, you're not running beyond your database. But in the case of thermal conductivity data, it's clear, there is no data at these very high burnups, and high linear heat generation rates.

MEMBER SCHULTZ: But experimental rods operate like power reactor rods.

CHAIRMAN ARMIJO: Yes, that's -- and the reason is they --

MEMBER SCHULTZ: That's why the data isn't showing it.

CHAIRMAN ARMIJO: Yes. Okay. Well, we've had a good discussion.

MEMBER BANERJEE: Paul, would it be useful if you could send us or email the information you have about -- you said in the linear heat rate where it is typically, and what the linear heat rates are. Is it around 30,000?

MR. CLIFFORD: Well, I'm trying to think.

MEMBER BANERJEE: There's a point of inflection I think, that's the word --

MR. CLIFFORD: Right, the point of

inflection -- I mean, the meat of the curve for PWRs are generally around 30 to 32 gigawatt days, and it's generally around 13.2 to 13.4 kilowatts a foot. And then it drops down to 6-1/2 to 7 kilowatts a foot by end of life.

MEMBER BANERJEE: Okay.

MR. CLIFFORD: But in real life, I mean, if you look at the limiting rods and some of these fuel performance methodologies you actually do a survey, and you find the worst three or four hundred rods, and you calculate say rod internal pressure throughout its life. So, it may be more advantageous to see what the actual maximum rod power histories are, as opposed to what some bounding --

MEMBER BANERJEE: Right. Do you have any of that information?

MR. CLIFFORD: Just bits and pieces from what I've been doing. I mean, I've got some actual rod power histories from Calvert Cliffs, I think from Turkey Point. I'm trying to remember if I have any for St. Lucie 1. I'd have to look.

MEMBER BANERJEE: Okay. Well, I think we've taken this as far as we can go right now.

MEMBER SIEBER: Right.

MEMBER BANERJEE: So, thanks very much for

your help, Paul, and we're going to move on.

MEMBER ABDEL-KHALIK: Just as a point of interest, I mean, if you look at data for the range of centerline temperatures between 1,250 and 1,500 Kelvin at 30 gigawatt days per ton, this augmentation factor empirical fit is about .1. The data shows values that .1 plus or minus .1. And if that's the case, if I instead of just going an empirical fit in the middle of the data draw a limit line above the data, that empirical augmentation can be as much as twice whatever the empirical value that's added.

MR. CLIFFORD: Well, this might be a good discussion -- you know, we're still reviewing this topical report. And, as I mentioned at the last Subcommittee meeting, we're still seeing significant differences between FRAPCON and the RODEX2 rod internal pressure calculations. So, there might be something here where we'll discover it as we go further into the review.

CHAIRMAN ARMIJO: Paul, in effect, you don't -- in FRAPCON when you introduced the thermal conductivity degradation corrections, you didn't use augmentation factors. You incorporated it in some other way, but it's still the same database. And why -- if we're using FRAPCON to check the AREVA, how can

we conclude that you're right, and they're wrong, or both of you are wrong?

MR. KABADI: This is Jay Kabadi from FPL. I just want to clarify one thing. The plots which we've been looking on these different temperature versus burnup, those are not the ones which are used for the fuel design. If you look at some of the plots we presented for TCD for fuel design, that used a bounding line which goes all the way on top of all the data, which is the Haldon data. This one for LOCA. The one which is being discussed now, the plots we do a split between different kilowatt per foot.

MEMBER ABDEL-KHALIK: That's our concern, the initial stored energy in the fuel and its impact on the --

MR. KABADI: Correct. For large break LOCA, that's correct. Right. But when we talk about the augmentation factors which were used for the fuel design, that feed was done way about all the Haldon data.

MEMBER BANERJEE: Well, I guess the question is if you took the upper bound of this data for large break LOCA, what would your stored energy be, rather than drawing a line through it? Would it be just a little bit more? You know, we can't do this at

the back of the envelope.

MEMBER SIEBER: Don't have the data.

MEMBER BANERJEE: So, that's the issue.

MR. DUNN: Dr. Banerjee, Bert Dunn, again. I just wanted to remind the people that we do add an uncertainty in addition to this augmentation factor.

MEMBER BANERJEE: Okay, tell us what you do there. How much of an uncertainty do you add?

MR. DUNN: It's a Bell curve. It's normal distribution based on 130 degrees -- 72 degrees Celsius standard deviation. It could be up to 150 to 180 degrees Celsius on a given calculation, and it is most probable for this plant, as you said, that because the peaks occur during blow down that it is a high stored energy evaluation that sets the limit for the plant's application. So, it's --

MEMBER BANERJEE: So, if you took the data that you've got -- I mean, not the data, your calculations, and took out those cases where you've got the higher fuel temperatures, I mean, the more degradation of thermal conductivity, are these the runs that give you the maximums that you found, or is there something else? Because we haven't analyzed exactly what gave you the high fuel temperatures. Was it those runs that gave you the highest fuel

temperatures that you had augmented at -- or put the uncertainty on top?

MR. DUNN: I would have to go into the exact calculation itself to give you a positive answer, but I very much suspect that is the case, that my rule of thumb for this is that maybe 75 percent of the determination of the peak cladding temperature for a case that has a PCT at eight seconds, nine seconds is due to the initial fuel stored energy. It will not be the difference in centerline temperature, it will be the volume average.

MEMBER BANERJEE: Yes. But you are -- sorry, go ahead, Ben.

MR. PARKS: I apologize for interrupting. I was just looking at some of St. Lucie's limiting cases the other day, actually. It turns out that the highest PCT cases have pretty high linear heat rates, more than 14.5 kilowatts per foot, I believe, or close to the peak. It's somewhere around there. What I did notice was the top case wasn't the highest in linear heat rate, but it was pretty close, and it was also burnt up about I think 21 gigawatt days per ton. So, those are the characteristics.

Some other characteristics of the limiting cases, there was a tendency, it was small, as Jen

said, they were very scattered, but the limiting cases had very low, less than one multipliers on some of the two-phase heat transfer coefficients. That kind of tended to drive limiting results, too, just a little bit.

CHAIRMAN ARMIJO: What were those conditions again? The power burnup and peak clad temperature for -- that you just cited for St. Lucie?

MEMBER SCHULTZ: Just repeat those again, Ben, because we want to capture what we're talking about here in terms of the -- when the linear heat generation rate occurs at its peak, and what -- and at what burnup.

MR. PARKS: Oh, I think the peak burnup was in the neighborhood of 20 gigawatt days per ton. The linear heat rate, I think it was about 14.5. Is that the linear heat rate? Do you recall, Bert?

MR. DUNN: That would be my expectation. It's in that area.

MR. PARKS: Yes. And the PCT there is a little bit more than 1,650 degrees Fahrenheit.

CHAIRMAN ARMIJO: And after that, would normal fuel design, which I think that's what you guys do if you're going to be dropping linear heat rate. So, I think it's -- there's so much that goes into the

fuel -- peak centerline temperature other than thermal conductivity degradation that's got to be appreciated, and whatever we've got, we've got one set of data of thermal conductivity degradation, and it's gone into the agency's codes to check what the licensees are doing, and they're coming up with the same answer maybe for the same good reasons, or wrong reasons. I don't know, but I think that's where we are. My guess is that the big problem is that these burnups, 30 gigawatt days per ton and less, and the issue of whether we have an error gets less the higher you go up in burnup, gets smaller as you go up in burnup. But that's where we are, and we're just going to have to discuss it as a Committee to see if we're satisfied.

MEMBER BANERJEE: Well, just one piece of information would be useful, which is the sort of what assumptions were made regarding the core in terms of the burnup versus the linear heat rate. If we know what sort of distribution was assumed for that, that would be useful. So, if you assume that at high burnups you had a lower heat rate which seems reasonable, that's okay, but tell us what you assumed.

MR. CLIFFORD: Well, I mean, there's got to be somebody from FPL that can provide you with their reload checklist linear heat rate versus burnup curve.

MEMBER BANERJEE: That's really what we need.

CHAIRMAN ARMIJO: Can we get that?

MR. KABADI: Yes. I think like Paul mentioned for St. Lucie 1 -- this is Jay Kabadi from FPL. Yes, there is a power reduction that is included in the AREVA large break LOCA analysis, and that does show that certain time in life the power goes down. Now, I don't recall exactly the number right now. We can look at that, but --

MEMBER BANERJEE: All you need to do is provide it.

MR. KABADI: It's in the range of about 95 percent of the full --

MEMBER BANERJEE: Just provide it to us.

MR. KABADI: I'll provide the number.

CHAIRMAN ARMIJO: Not just the number, just the graph of linear heat generation rate versus burnup that's your design basis, that you're actually designing these cores, or have designed the core.

MEMBER BANERJEE: But more than that, you intend to operate --

MR. KABADI: This is Jay Kabadi again. I just want to clarify. I think what you want is our actual design powers.

MEMBER BANERJEE: Yes.

MR. KABADI: That's what --

CHAIRMAN ARMIJO: Yes, versus burnup.

MEMBER ABDEL-KHALIK: If you have a tech spec limit on that, I think it would be worthwhile to provide that.

MEMBER BANERJEE: In addition. Anyway, Mr. Chairman, I am trying to -- do we have some--anything more here to go on, because we've interrupted you, and we are now only running one hour over time.

MEMBER CORRADINI: That's normal for you.

MEMBER BANERJEE: I'm usually on time.

CHAIRMAN ARMIJO: Is there any questions from the --

MR. PANICKER: Just wanted to say that the licensee has committed to implementing the new -- the revised version of generic Topical Report for RODEX 2 as soon as it is -- as soon as the staff was finished reviewing.

CHAIRMAN ARMIJO: So, if it turns out that as a result of this discussion you're going to wind up with more conservatisms required for the final augmentation factors, St. Lucie 1 would have to comply with that. And if they've already designed and built their core, they have a little problem and they're

going to have to do something about --

MR. PANICKER: One is being reviewed. I think one of the staff members is reviewing it, so we may have some questions. We will run FRAPCON 3.4 and compare with their values and there will be back and forth RAIs. And, finally, we will arrive at a set of penalty factors for the core. And that has to be implemented by the licensee.

MR. WASIK: Yes, this is Chris Wasik, Florida Power & Light. We did commit to a condition of license that upon NRC approval of a new version of the RODEX2 code that does address TCD, that we will look at that and determine if it's more conservative than our existing analysis, then we'll commit to what -- we've committed then to adopting that.

CHAIRMAN ARMIJO: And it might --

MR. WASIK: If it turns out that what we did now is more conservative than the future approved code, then --

CHAIRMAN ARMIJO: You'll be back. That's the easy answer.

MR. WASIK: But that is a condition of license as part of the EPU.

MEMBER BANERJEE: That's a commitment. Right?

MEMBER SHACK: It's a licensing basis. Right?

(Simultaneous speaking.)

MR. WASIK: It's a condition of license.

MEMBER BANERJEE: Okay, thank you.

MEMBER SHACK: It's part of the license.

MR. WASIK: That's correct.

MEMBER BANERJEE: Okay, thank you. Are you finished with everything? Can I turn this meeting back to --

CHAIRMAN ARMIJO: Professor Banerjee, are you going to ask for any comments from the public?

MR. ULSES: Yes, the staff is finished.

MEMBER BANERJEE: The staff is finished. May we ask for any comments from the public, if they're available?

MEMBER BLEY: We're checking.

MEMBER STETKAR: We're checking.

MEMBER BANERJEE: All right.

MR. WANG: The line is open.

MEMBER CORRADINI: The line is open.

MEMBER BANERJEE: The line is open?

MEMBER CORRADINI: Yes.

MEMBER BANERJEE: Okay. Are there any comments from the public? Anybody in the public with

comments?

CHAIRMAN ARMIJO: Anyone on the line?

MEMBER BANERJEE: The line is open. Right?

MEMBER CORRADINI: Yes.

MEMBER BANERJEE: Okay. All right. In that case, there's no comments.

MEMBER SIEBER: No questions.

MEMBER BANERJEE: No further questions, thank you very much. Thanks, FPL, very much, and I turn it back to you -- we're not that -- we started late.

CHAIRMAN ARMIJO: Yes, we started late.

MEMBER SHACK: All of 15 minutes.

CHAIRMAN ARMIJO: Okay. Well, I thank Florida Power & Light, AREVA, and the staff for an exhilarating afternoon. So, we're going to take a break now. What time is it now?

MEMBER BLEY: 5:20.--

MEMBER SIEBER: 8:30 tomorrow?

CHAIRMAN ARMIJO: No, no, we've got a bunch of stuff to do, so let's give ourselves 15 minutes. That's 20 of six, that's more than 15 minutes. We're off the record.

(Whereupon, the above-entitled matter went off the record at 5:20 p.m.)

Presentation to ACRS
U.S. EPR Design Certification
Chapters 3, 9, 14, 19

May 10, 2012

AREVA NP

Outline

- Introduction
- Overview of the U.S. EPR Design
  - EPR Development Objectives
  - Major Design Features
  - Main Safety Systems
  - Protection From External Hazards
  - Severe Accident Mitigation
- Overview of U.S. EPR Design Certification Application
  - Chapters 3, 9, 14, 19

EPR Development Objectives

- **Evolutionary design based on existing PWR operating experience, construction experience and Research & Development**
  - **Improved economics**
    - Reduce generation cost by at least 10%
    - Simplify operations and maintenance
    - 60-year design life
  - **Improved Safety**
    - Increase design margins
    - Increase redundancy and physical separation of safety trains
    - Reduce core damage frequency
    - Accommodate severe accidents and external hazards
    - Reduce occupational exposure and low level waste

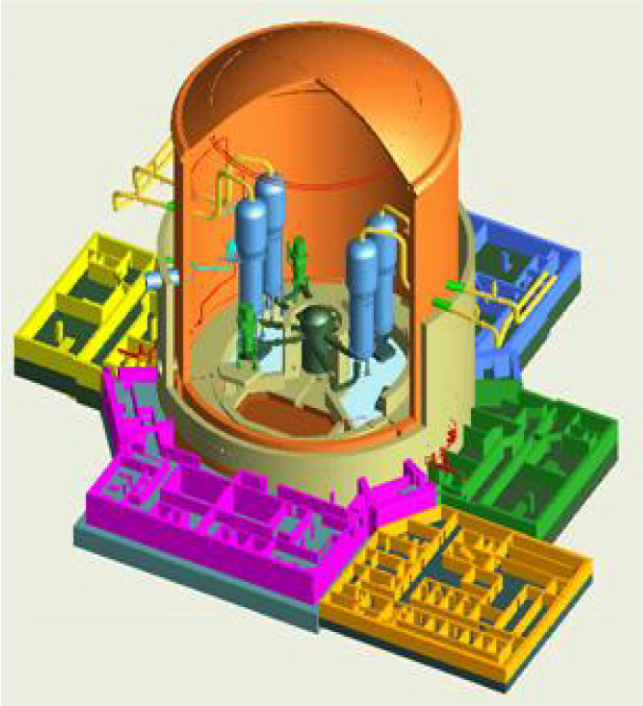

Major Design Features

- **Nuclear Island**
  - Proven Four-Loop RCS Design
  - Four-Train Safety Systems
  - Double Containment
  - In-Containment Refueling Water Storage
  - Severe Accident Mitigation
  - Separate Safety Buildings
  - Advanced 'Cockpit' Control Room
- **Electrical**
  - Shed Power to House Load
  - Four Emergency Diesel Generators
  - Two Smaller, Diverse Station Blackout Diesel Generators
- **Site Characteristics**
  - Airplane Crash Protection (military and commercial)
  - Explosion Pressure Wave

Reflects full benefit of operating experience and 21st century requirements

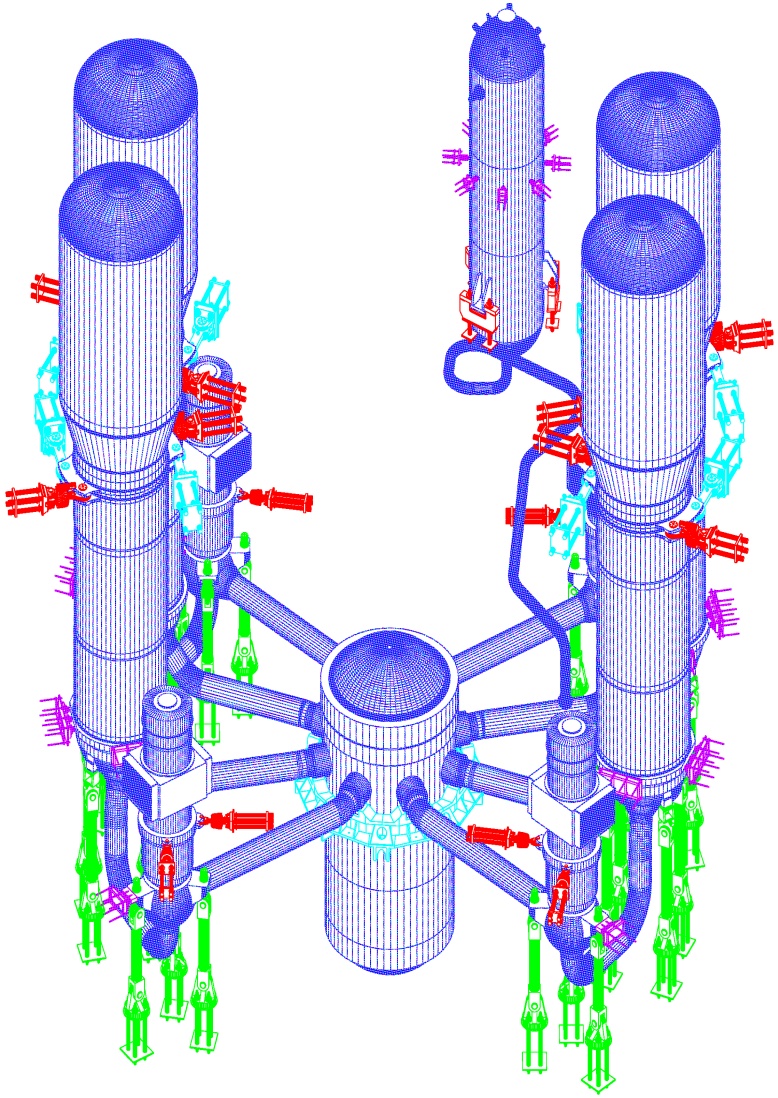

- Conventional 4-loop PWR design, proven by decades of design, licensing and operating experience
- NSSS component volumes increased compared to existing PWRs, increasing operator grace periods for many transients and accidents

A solid foundation of operating experience

The Four Train (N+2) Concept

Each safety train is independent and located within a physically separate building

Main Safety Systems

- Four train Safety Injection (SI) system
  - Medium head SI pumps
  - Combined Residual Heat Removal System / Low Head Safety Injection
  - Accumulators
- In-Containment Refueling Water Storage Tank
- Extra Borating System (two trains not shown)

- Non-safety containment spray for severe accident mitigation

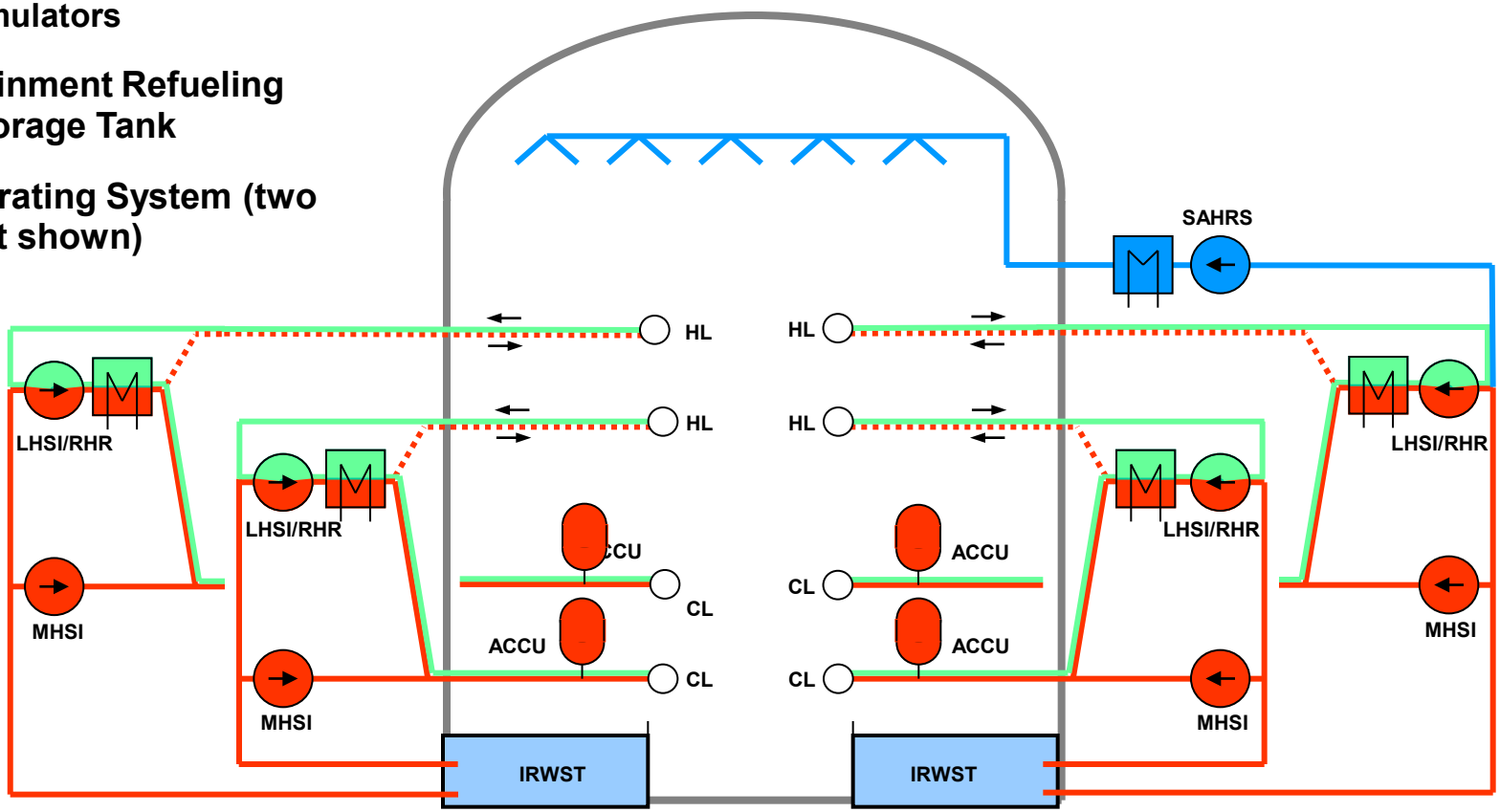

Main Safety Systems
Secondary Side

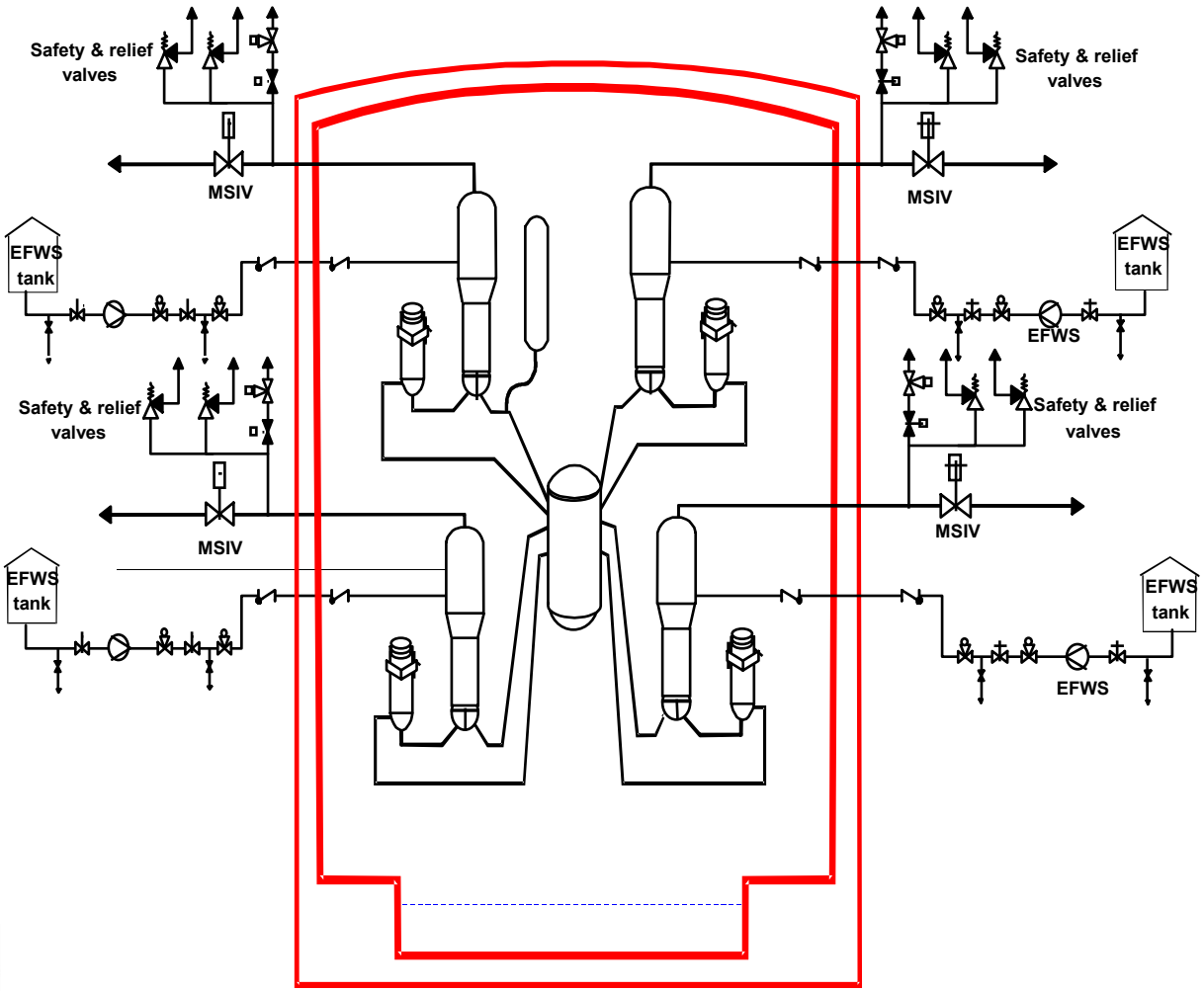

- Safety-related main steam relief train
- Four separate Emergency Feed Water Systems (EFWS)
- Separate power supply for each
- 2/4 EFWS also powered by Station Black Out (SBO) diesels
- Interconnecting headers at EFWS pump suction & discharge

Protection From External Hazards
Shielded Containment

- Inner wall post-tensioned concrete with steel liner
- Outer wall reinforced concrete
- Protection against airplane crash
- Protection against external explosions
- Annulus filtered to reduce radioisotope release

Protection From External Hazards

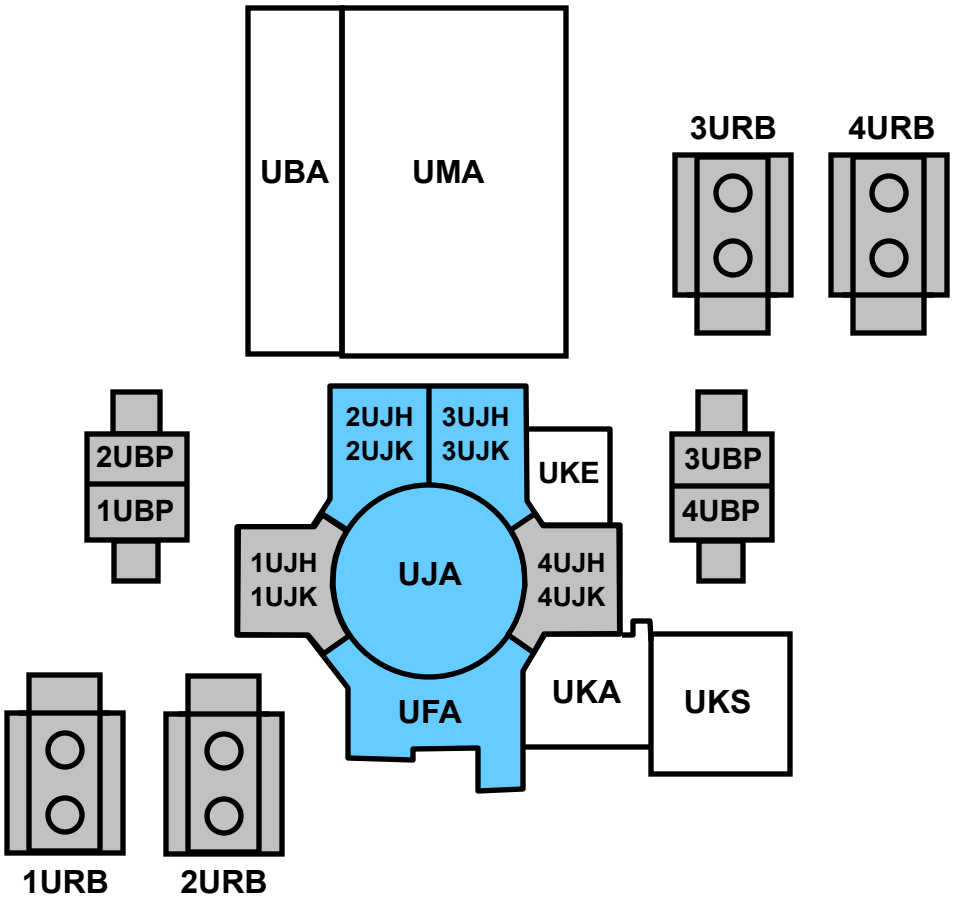

UBA	Switchgear Building
UBP	Emergency Power Generating Building
UFA	Fuel Building
UJA	Reactor Building
UJH	Safeguard Building Mechanical
UJK	Safeguard Building Electrical
UKA	Nuclear Auxiliary Building
UKE	Access Building
UKS	Radioactive Waste Processing Building
UMA	Turbine Building
URA	Cooling Tower Structure
URB	Essential Service Water Cooling Tower Structure

PROTECTED BY SHIELD BUILDING

PROTECTED BY PHYSICAL SEPARATION

NOT PROTECTED

Severe Accident Mitigation

- Prevention of high-pressure melt using Primary Depressurization System
- Ex-vessel melt stabilization, conditioning and cooling
- Long-term melt cooling and containment protection using active cooling system
- Control of H_2 concentration using passive autocatalytic recombiners

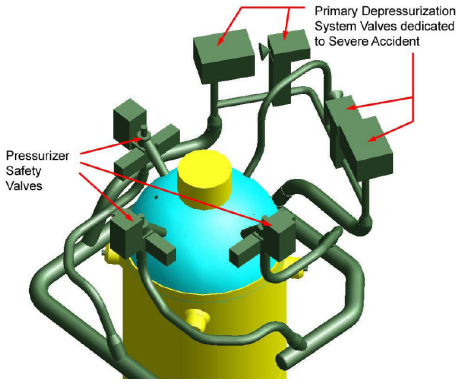

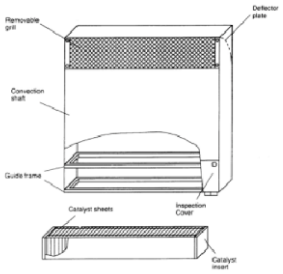

U.S. EPR Design Certification Application

- U.S. EPR design reflects an evolutionary, active plant design
- U.S. EPR applies proven analytical methodologies
- FSAR consistent with key NRC guidance documents
  - Regulatory Guide 1.206, “Combined License Applications for Nuclear Power Plants (Light Water Reactor Edition)”
  - NUREG-0800, "Standard Review Plan for the Review of Safety Analysis Reports for Nuclear Power Plants“
  - Exemptions and exceptions minimized
  - No RTNSS

Chapter 3: Design of Structures, Components, Equipment and Systems

Topics

- 3.1 - Compliance with NRC General Design Criteria.
- 3.2 - Classification of Structures, Systems, and Components
- 3.3 - Wind and Tornado Loadings
- 3.4 - Water Level (Flood) Design
- 3.5 - Missile Protection
- 3.6 - Protection Against Dynamic Effects Associated with Postulated Rupture of Piping
- 3.7 - Seismic Design
- 3.8 - Design of Category I Structures
- 3.9 - Mechanical Systems and Components Piping
- 3.10 - Seismic and Dynamic Qualification of Mechanical and Electrical Equipment
- 3.11 - Environmental Qualification of Mechanical and Electrical Equipment
- 3.12 - ASME Code Class 1, 2, and 3 Piping Systems, Piping Components, and their Associated Supports
- 3.13 - Threaded Fasteners (ASME Code Class 1, 2, and 3)

Chapter 3: Design of Structures, Components, Equipment and Systems

Items of interest:

- External Flood Protection
  - U.S. EPR uses a "Dry Site" concept → Site platform level (grade level) is arranged above the maximum level of the design basis flood
- Seismic Design Basis
  - Horizontal and vertical ground motion based on European Utility Requirements spectral shapes anchored to a peak ground acceleration (PGA) of 0.3g.
  - A high frequency control motion is also added, anchored at a 0.21g horizontal PGA and a 0.18g vertical PGA.
  - Range of soft, medium and hard rock sites
- The Reactor Building, Safeguard Building 2/3, and Fuel Building are shielded by a reinforced concrete shield building designed for protection against missiles, including a large commercial aircraft.

Chapter 3: Design of Structures, Components, Equipment and Systems

Items of interest:

Critical Sections identified to demonstrate essentially complete design per requirements of 10 CFR 52.47(c)

- Three-Tiered Selection Methodology for Critical Sections
  - Qualitative Criterion
    - SC I structures that perform a safety-critical function such as a barrier to radioactive release.
  - Quantitative Criterion
    - Selected through a thorough numerical analysis of the NI finite element analysis results
    - Intended to identify sections that are highly stressed, but not chosen under the qualitative criterion
  - Supplementary Criterion
    - Intended to capture critical sections not screened in by other two criteria
    - Based on engineering judgment
    - Necessary to obtain an adequate representation of typical structural elements

36 Critical Sections encompassing Category I Structures in U.S. EPR design

Chapter 3: Design of Structures, Components, Equipment and Systems

Items of interest:

- Leak Before Break is used to define pipe break and crack locations and configurations.
  - Applied to Reactor Coolant Loop, Pressurizer Surge Line, and Main Steam Line
- Evaluation of jet impingement and pipe whip effects
  - Addresses potential non-conservative assessments of the jet impingement loads due to inaccuracies and omissions in ANS 58.2
  - Technical Report ANP-10318P: AREVA NP proprietary methodology for calculating external loading effects on essential SSCs due to jet impingement, including unsteadiness, jet resonance and jet reflection effects
- In-service Testing Program is described in the U.S. EPR FSAR
  - Includes provisions for full-flow testing of pumps and check valves

Chapter 9: Auxiliary Systems

- **Topics**
  - 9.1 - Fuel Storage and Handling
  - 9.2 - Water Systems
  - 9.3 - Process Auxiliaries
  - 9.4 - Air Conditioning, Heating, Cooling and Ventilation Systems
  - 9.5 - Other Auxiliary Systems

Chapter 9: Cooling Chain

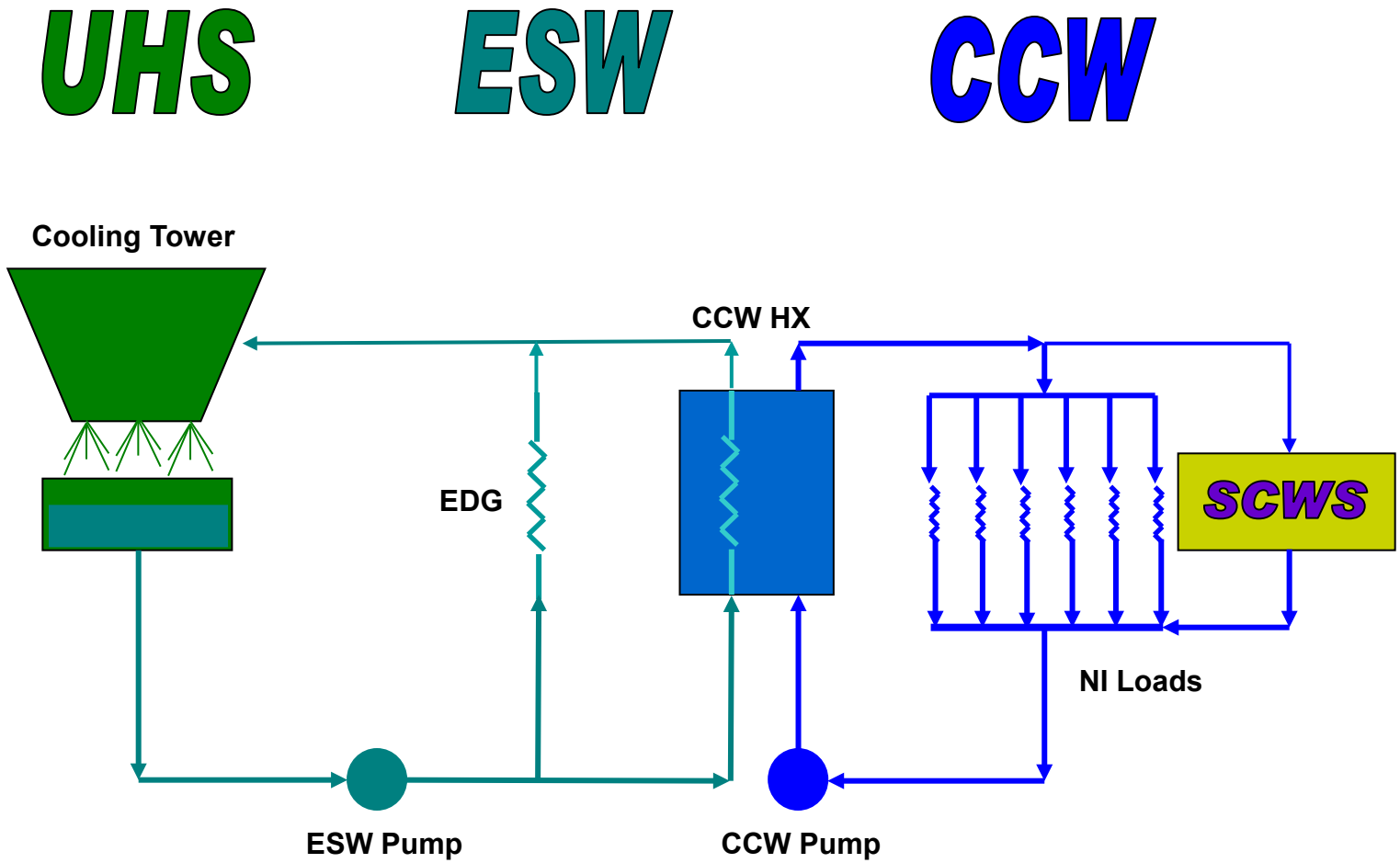

Chapter 9: Auxiliary Systems

Fuel Storage and Handling

- U.S. EPR Under Pit Spent Fuel Cask Transfer Facility design differs from cask loading facilities in U.S. operating fleet; however, the design has evolved from similar facilities in Europe (covered in separate presentation)
- Fuel rack modules are based on existing 10 CFR Part 71 transportation and 10 CFR Part 72 dry storage technology [Detailed description of rack modules and methodology are described in Technical Report TN-Rack.0101]
- Spent Fuel Pool Cooling and Makeup
  - Safety-related Fuel Pool Cooling System (FPCS) design to cool the spent fuel assemblies with water during all storage conditions.
  - EDG-backed Seismic Category I makeup pump with reliable backup (e.g., IRWST)

Chapter 14: Verification Programs

- Topics
  - 14.2 – Initial Plant Test Program For Safety Analysis Reports
  - 14.3 – Inspections, Tests, Analyses and Acceptance Criteria, and Tier 1

- Initial Test Program (ITP) For Safety Analysis Reports
  - Demonstrates structures, systems, and components (SSC) functionality prior to fuel load.
  - Exercise and evaluate emergency operating procedures and Technical Specification surveillance procedures.
  - Includes testing of unique EPR design features.
  - Includes transient tests that demonstrate the ability to handle significant plant perturbations.
  - Includes Pre-Operational (173 tests) and Startup (49 tests) testing
  - Conduct of test program is responsibility of COL Applicant

Chapter 14: Verification Programs

- Unique Features Testing in ITP
  - Fixed self-powered neutron detectors (SPNDs), fabricated from Cobalt-59
  - Movable incore neutron measurement "aeroball" system used to calibrate the SPNDs
  - Reactor coolant pump standstill seal, designed to isolate the reactor coolant pump seal in response to station blackout event
  - Measurement of U.S. EPR "heavy neutron reflector" reactor internals vibration (RG 1.20)
  - Natural circulation of the reactor coolant system
  - Partial trip feature to immediately reduce reactor power to ≤50% reactor power and turbine bypass/condenser capacity ≥50% reactor power
- ITAAC based on selection criteria in SRP 14.3, with DAC for piping design and human factors engineering

Chapter 19: PRA and Severe Accidents

- **Topics**
  - 19.1 – Probabilistic Risk Assessment
  - 19.2 – Severe Accident Evaluations

Chapter 19: PRA and Severe Accidents

- **Level 1 – Core Damage Frequency**
- **Level 2 – Large Release Frequency**
- **Level 3 – Offsite Dose Consequence (supports Environmental Report and SAMDA)**
- **Scope of initiating events for design certification**
  - **Internal events (at-power and low power/shutdown)**
  - **Internal hazards (Internal flood and internal fire events, at-power and at low power/shutdown)**
  - **External events**
    - PRA-based seismic margin assessment
    - Other external events – high level, qualitative evaluation

Chapter 19 PRA and Severe Accidents
Severe Accident Design Features

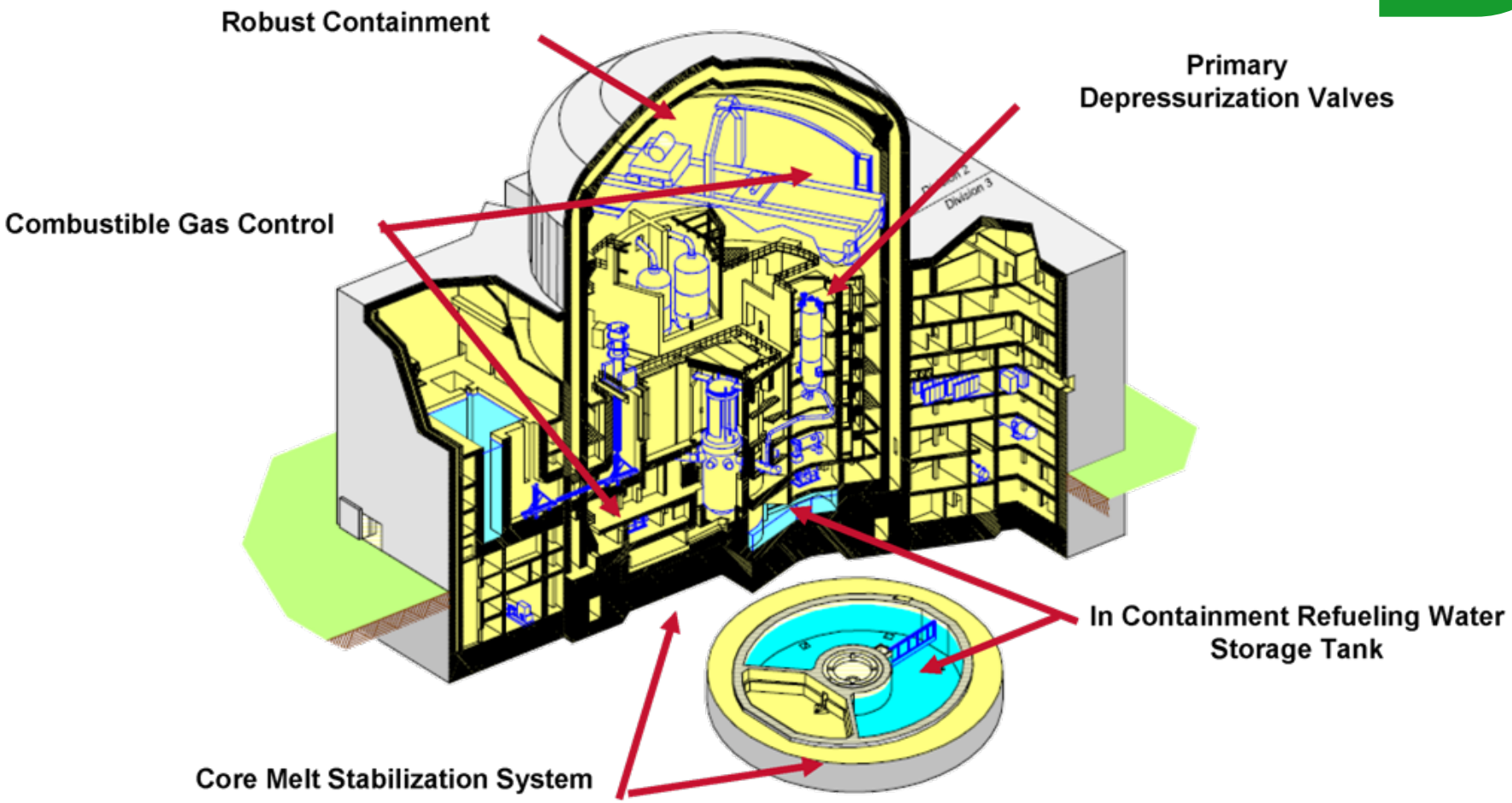

The U.S. EPR severe accident philosophy:
Maintain containment integrity by incorporating dedicated protection and event-mitigation design features addressing the relevant failure modes

Chapter 19: PRA and Severe Accidents

	At-Power	Shutdown	Total (At-power and Shutdown)	Safety Goal
CDF(yr)	5.3E-7	5.8E-8	5.8E-7	1E-4
LRF(yr)	2.6E-8	5.7E-9	3.1E-8	1E-6
CCFP	0.05	0.1	0.05	0.1

The U.S. EPR meets Commission's quantitative safety goals with margin

Acronyms and Abbreviations

Acronym	Definition
ACCU	Accumulator
ANS	American Nuclear Society
ASME	American Society of Mechanical Engineers
CCFP	Conditional Containment Failure Probability
CDF	Core Damage Frequency
CFR	Code of Federal Regulations
CL	Cold Leg
COL	Combined License
CCW	Component Cooling Water
DAC	Design Acceptance Criteria
EDG	Emergency Diesel Generator
EFWS	Emergency Feedwater System
ESW	Essential Service Water
FPCS	Fuel Pool Cooling System
FSAR	Final Safety Analysis Report
HL	Hot Leg
HX	Heat Exchanger
IRWST	In-Containment Refueling Water Storage Tank
ITAAC	Inspections, Tests, Analyses, and Acceptance Criteria
ITP	Initial Test Program
LHSI	Low Head Safety Injection
LRF	Large Release Frequency
MHSI	Medium Head Safety Injection
MSIV	Main Steam Isolation Valve

Acronyms and Abbreviations (Cont'd.)

Acronym	Definition
NI	Nuclear Island
NRC	Nuclear Regulatory Commission
NSSS	Nuclear Steam Supply System
PGA	Peak Ground Acceleration
PRA	Probabilistic Risk Assessment
PWR	Pressurized Water Reactor
RCS	Reactor Coolant System
RG	Regulatory Guide
RHR	Residual Heat Removal
RSS	Remote Shutdown Station
RTNSS	Regulatory Treatment of Non-Safety Systems
SAHRS	Severe Accident Heat Removal System
SAMDA	Severe Accident Mitigation Design Alternatives
SBO	Station Blackout
SC	Seismic Category
SCWS	Safety Chilled Water System
SI	Safety Injection
SPND	Self-Powered Neutron Detector
SRP	Standard Review Plan
SSC	Structures, Systems and Components
UHS	Ultimate Heat Sink

Presentation to ACRS
U.S. EPR Spent Fuel Cask Transfer Facility

May 10, 2012

EPR™ by AREVA

AREVA

Overview of the Fuel Storage and Handling System

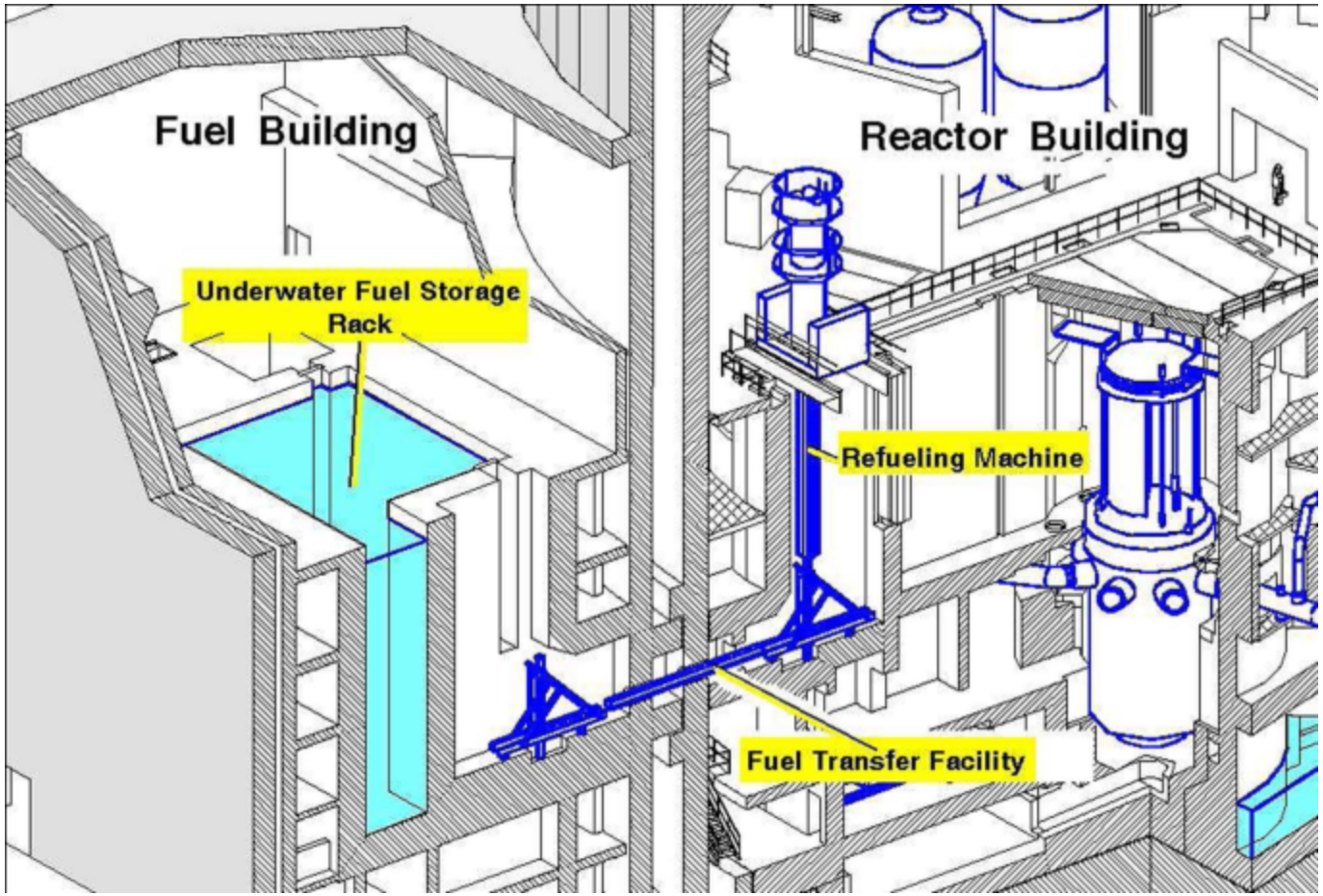

Similar to Current Operating (PWR) Plants

Overview of the Fuel Storage and Handling System

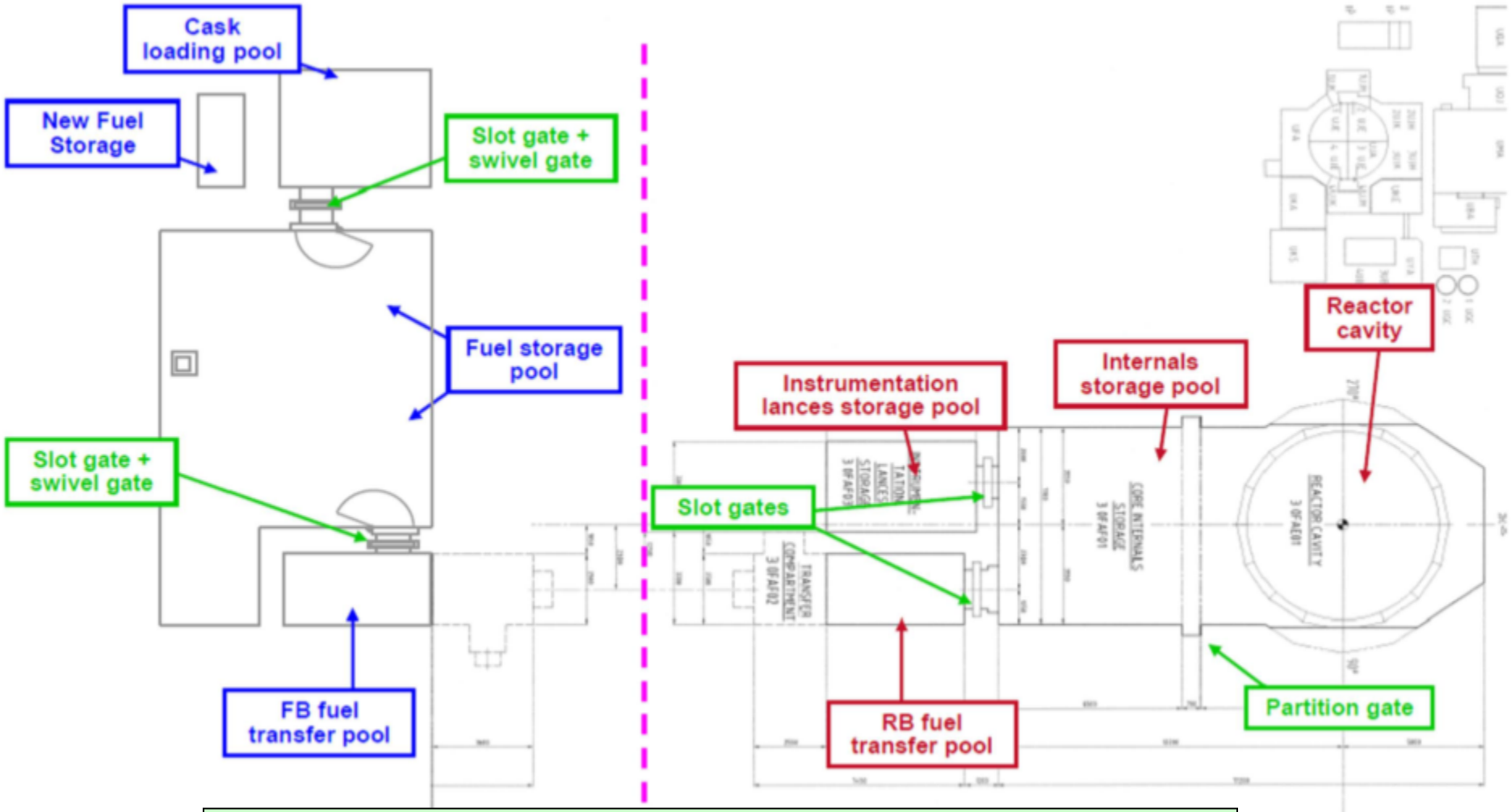

Similar to Current Operating (PWR) Plants

Under Pit Spent Fuel Cask Transfer Facility

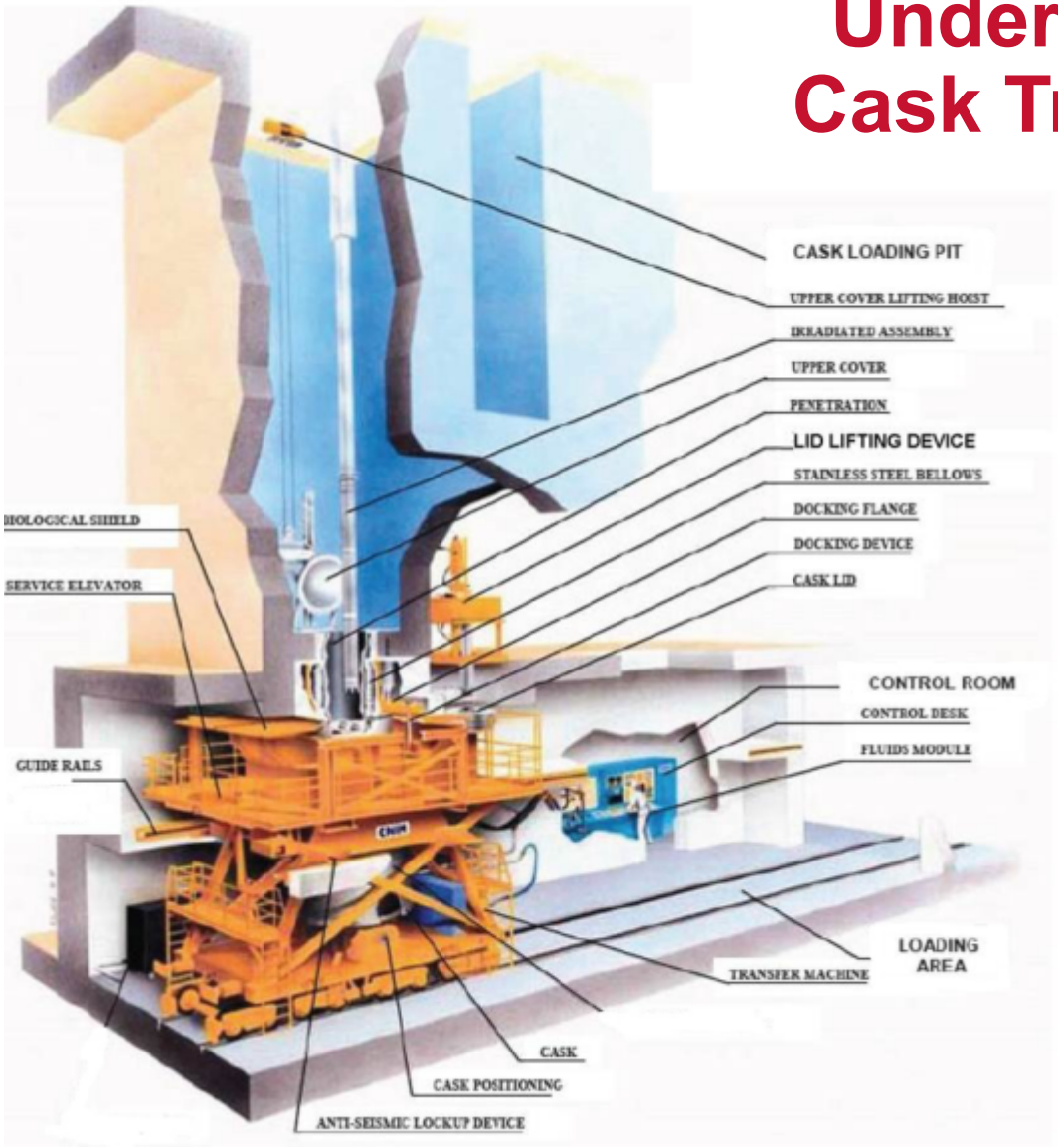

Design is First-of-a-kind in the U.S.

Fuel Building Layout

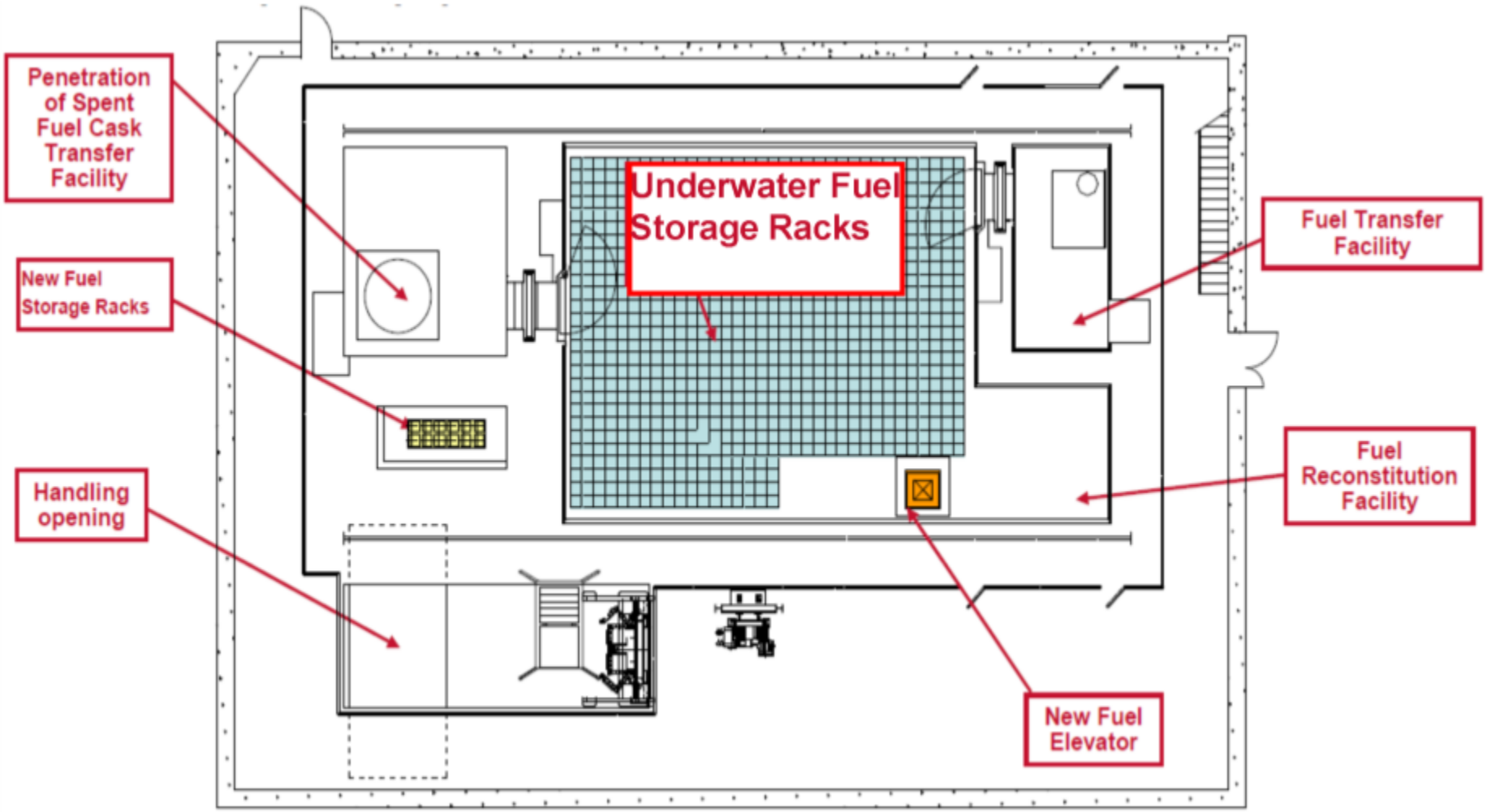

Fuel Building Section

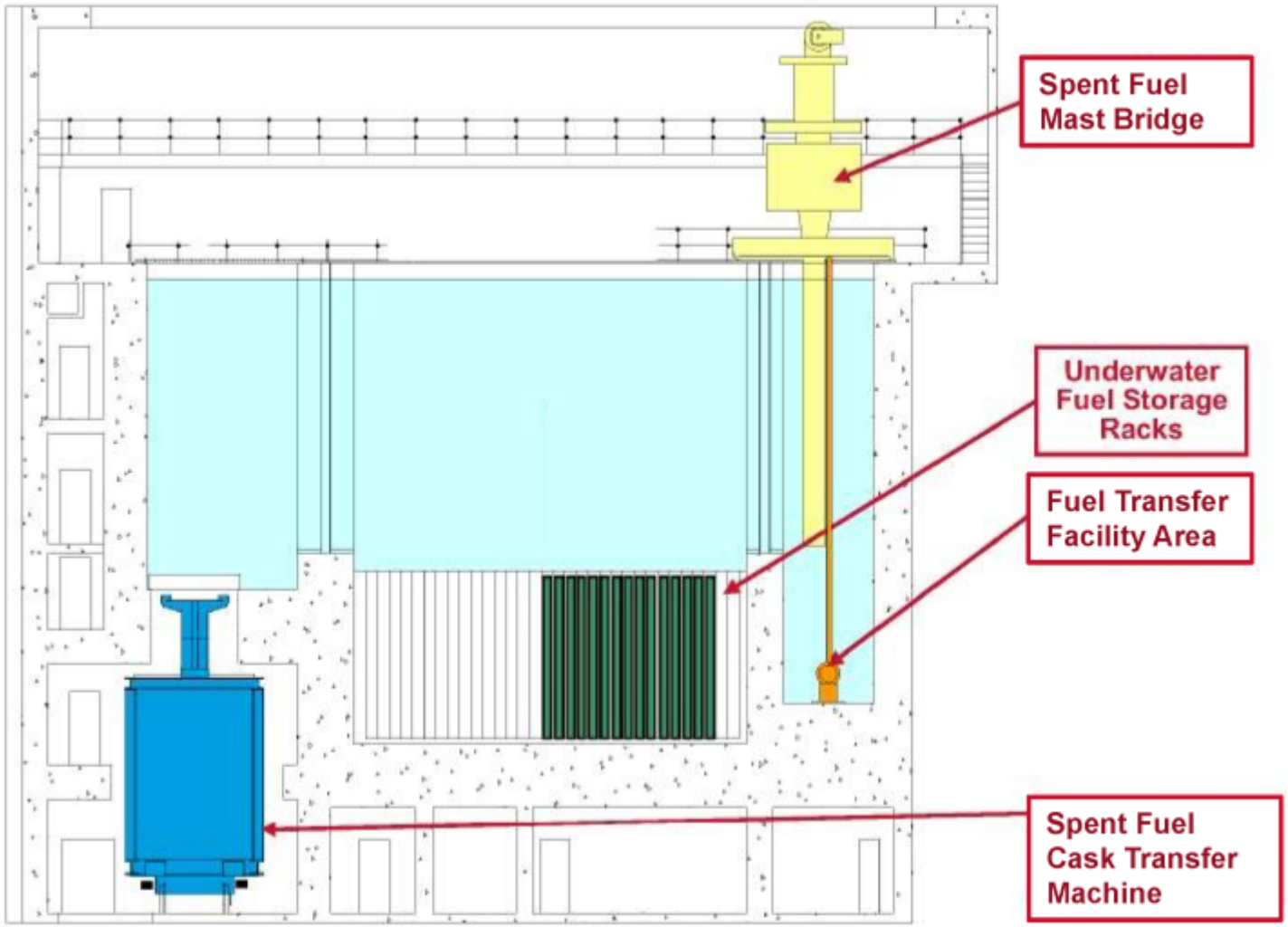

Spent Fuel Cask Transfer Facility Overview

- **The facility primarily consists of :**
  - **Spent Fuel Cask Transfer Machine (SFCTM)**
  - **Cask loading pit penetration assembly**
  - **SFCTF fluid and pneumatic systems**

- **Operations are conducted at the following stations:**
  - **Lifting station**
  - **Handling opening station**
  - **Biological lid handling station**
  - **Penetration station**

Spent Fuel Cask Transfer Machine

- **The SFCTM is a trolley which moves on rails**
  - **Main purpose is to carry the cask in vertical position between the lifting station and the three workstations in the loading hall.**
- **Safety-related function:**
  - **During cask loading, the SFCTM serves as part of the cask loading pit fluid boundary structural support when the cask is docked with the cask loading pit penetration to prevent draining the spent fuel pool (SFP), including during and following a Safe Shutdown Earthquake (SSE).**

SFCTM

Platform
Trolley on articulated carriage
Travelling rails

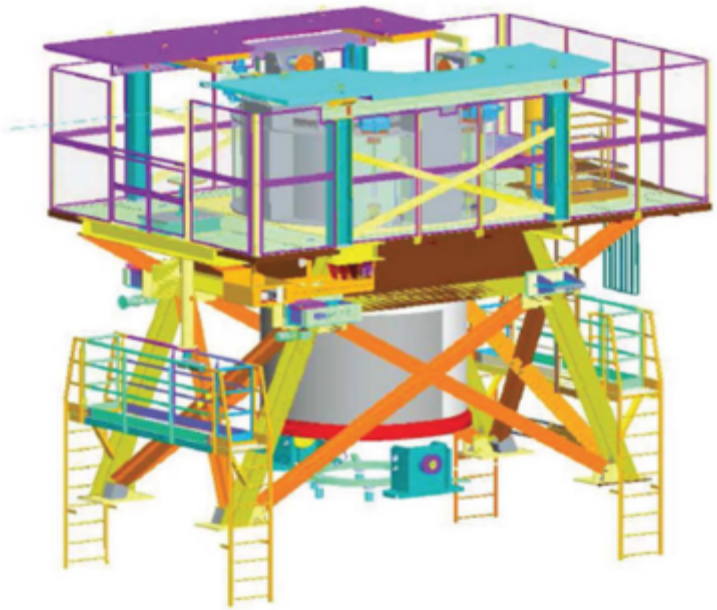

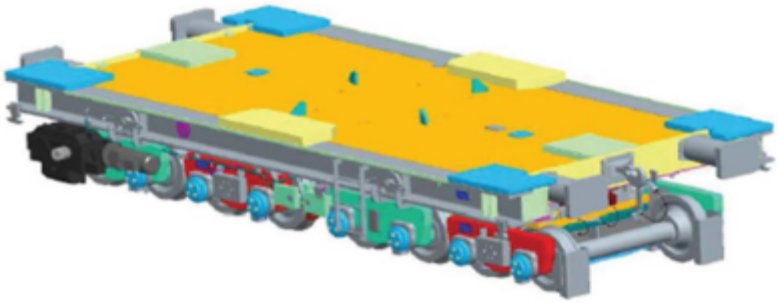

Penetration Assembly

- The penetration assembly is the opening in the cask loading pit floor that allows for cask loading
  - It consists of an upper cover at the bottom of the cask loading pit, the penetration, and a lower cover at the lower end of the penetration.
  - It's main purpose is to provide a leak-tight connection between the cask loading pit and the internal cavity of the cask.
- Safety-related function:
  - The penetration assembly serves as part of the cask loading pit fluid boundary to prevent draining the SFP, including during and following a Safe Shutdown Earthquake (SSE).

Penetration Assembly

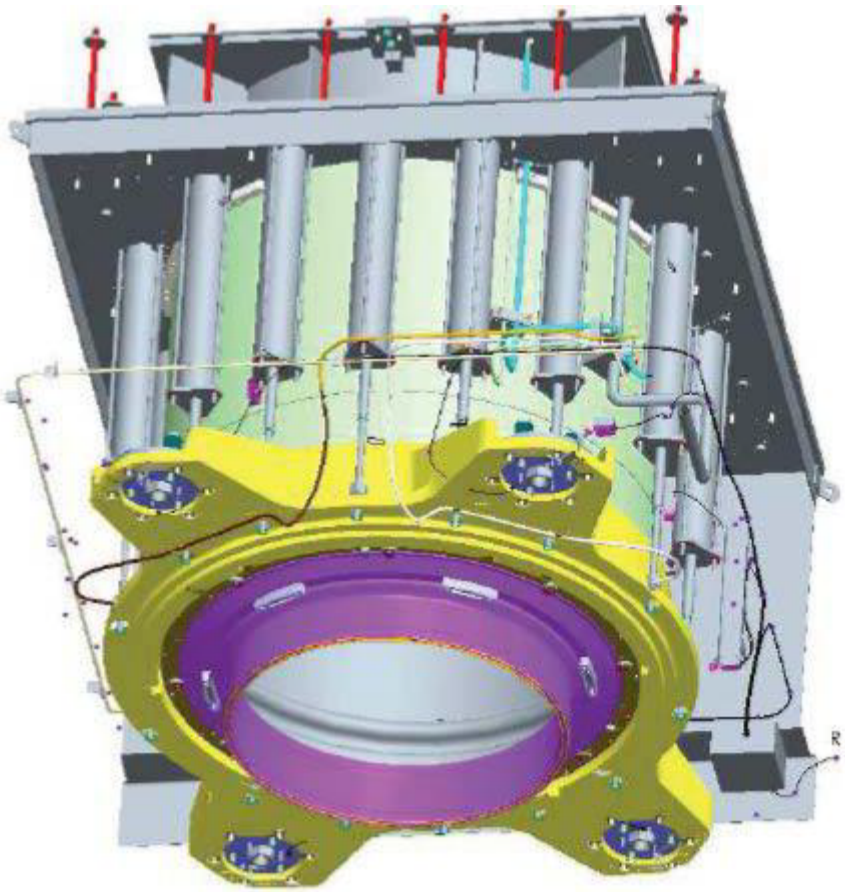

Cask docked with Penetration Assembly

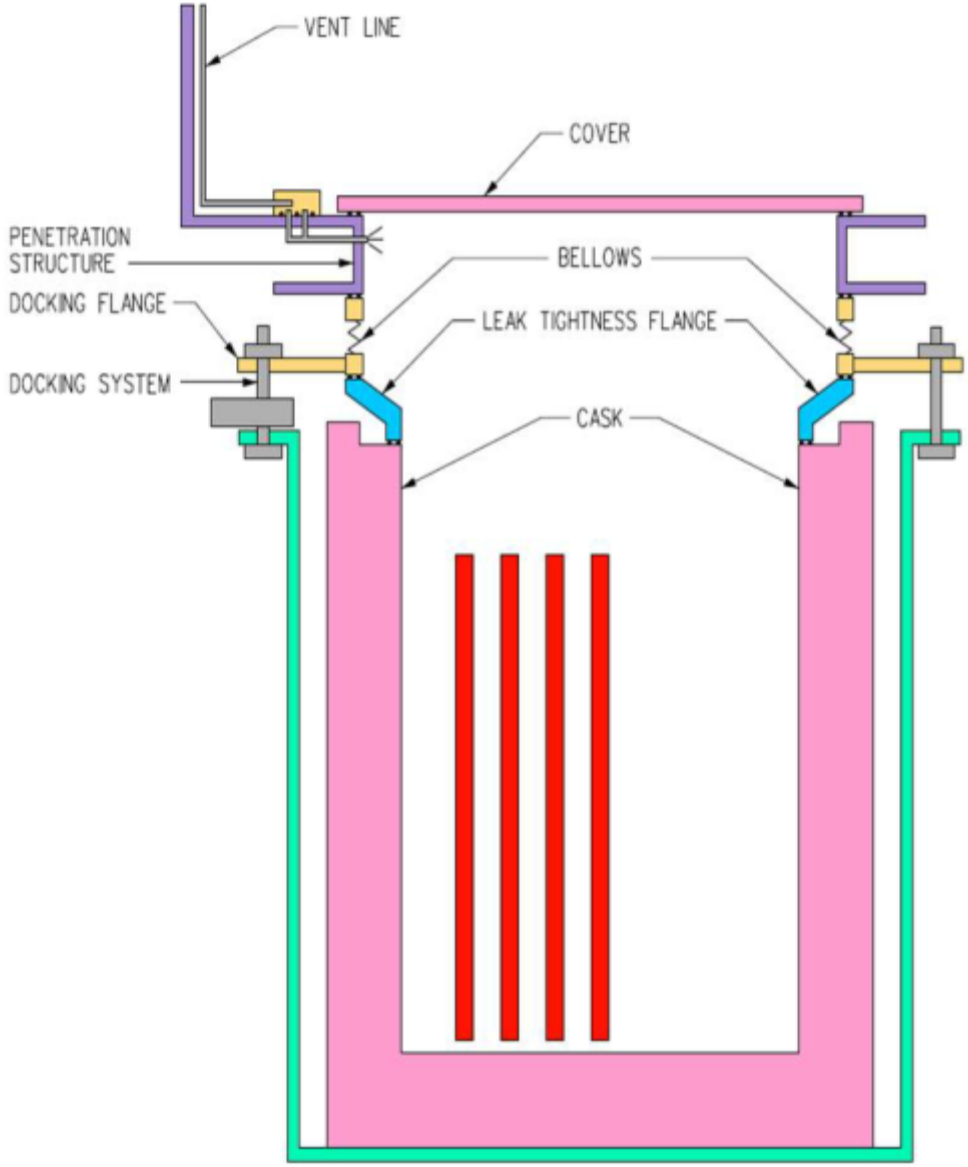

Placement of the Cask on the SFCTM

Lifting Station
(Outside Fuel Building)

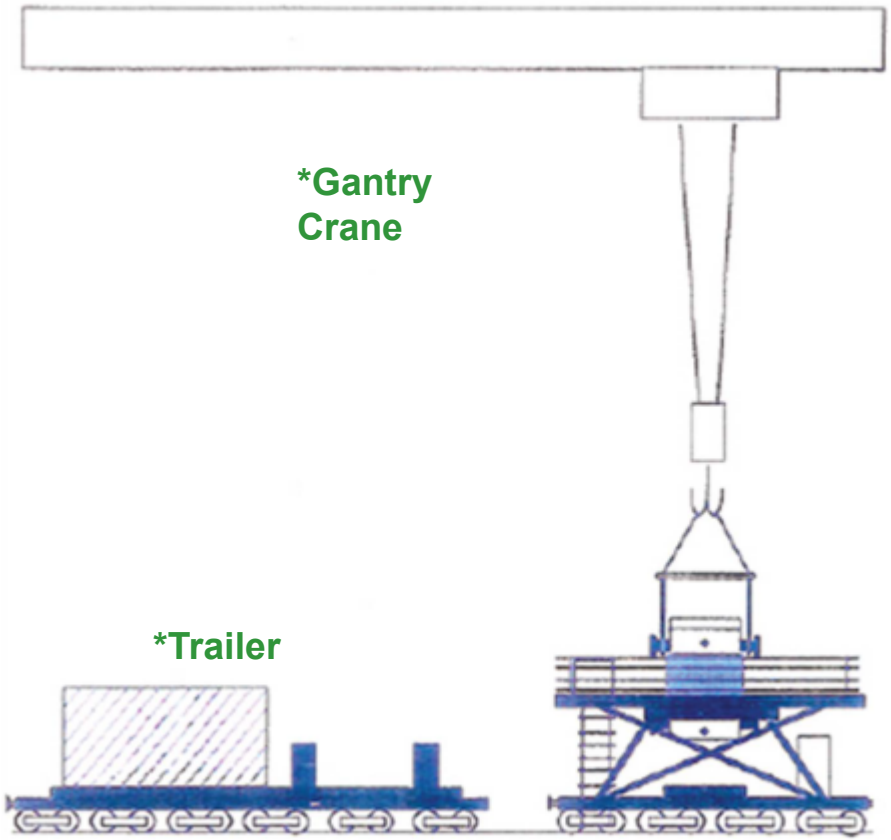

SFCTM

*Not in Design Certification Scope

Moving of SFCTM to Fuel Building Loading Hall

SFCTF Operations in the Fuel Building

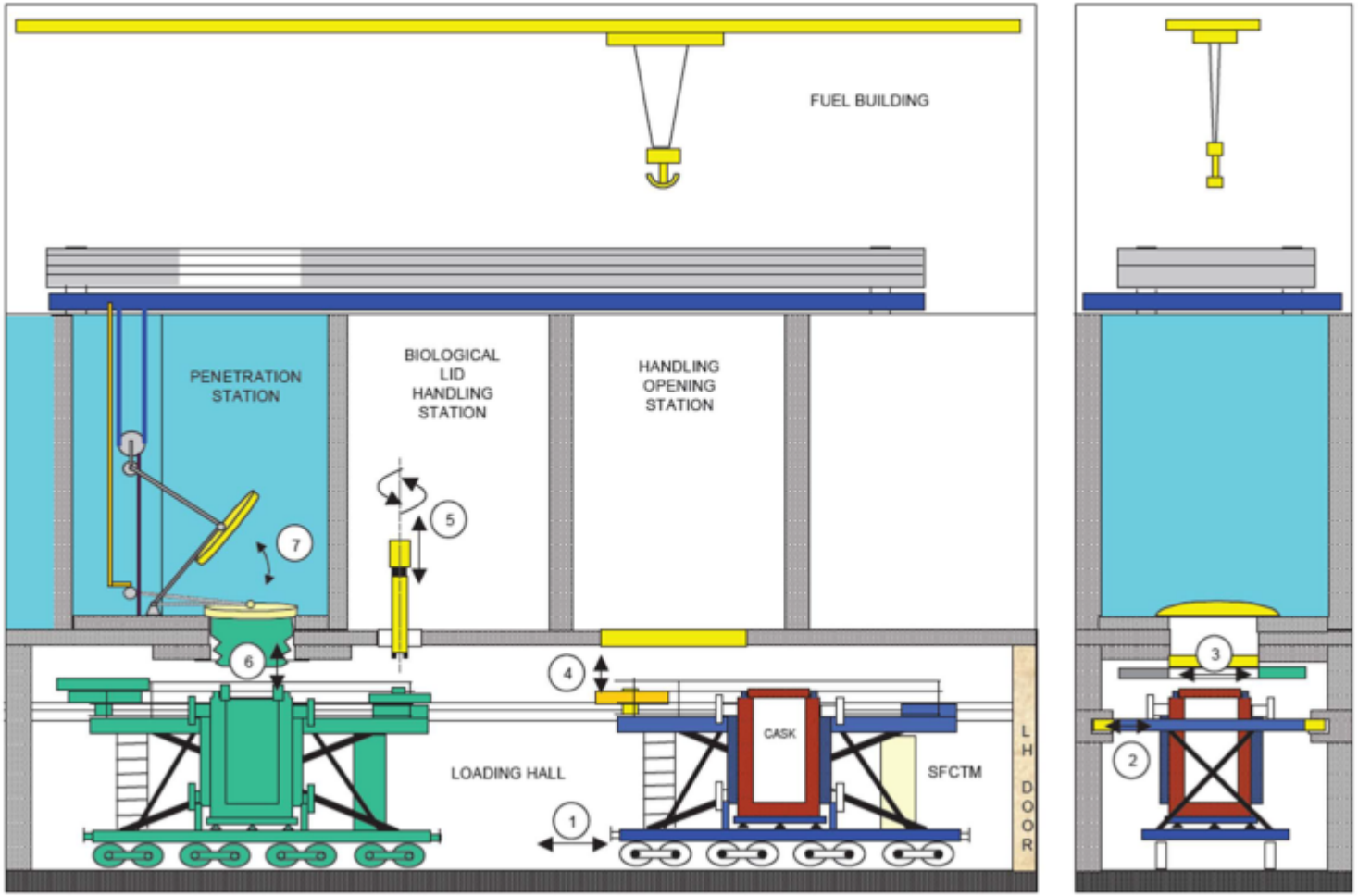

Drain Down Prevention

- **Drain Down Prevention Design Features**
  - **Tight tolerances between the SFCTM and the loading hall**
  - **Anti-seismic devices, guide rails and brakes**
  - **Seismic Category I fluid boundary components and support elements such as spent fuel pool liner/gates, penetration assembly, SFCTM, loading hall, anti-seismic devices, etc.**
  - **SFCTF Penetration Assembly piping/valves are Quality Group C and Seismic Category I**
    - To first normally closed valve
    - To second normally open valve
  - **Double barriers against leakage**
    - Double seals and double wall bellows
    - Upper and lower penetration covers
    - Spent fuel pool is isolated by two gates (swivel and slot)

Drain Down Detection

- **Drain Down Detection Features**
  - **Leakage monitoring/testing between double leakage barriers**
    - Between double seals
    - Between outer and inner walls of the bellows
  - **Level sensors provided in the pool compartment**
    - Spent fuel pool has Class 1E wide and narrow range level instrumentation which alarms in the Main Control Room
    - Cask loading pit have wide and narrow range indicators in the Main Control Room
  - **Cask loading pit drain isolation valves have position indication in the Main Control Room**

Beyond Design Basis Scenarios

- **Penetration Assembly Double Seal Failures**
- **Limiting Scenario**
  - **Both seals assumed to fail (two passive failures)**
  - **Cask loading pit gates open to the spent fuel pool**
  - **Fuel assembly in cask loading pit**
  - **No makeup water provided**
    - However, make-up water at 400 gpm is available via the IRWST and the SFP purification pump
  - **Leak flow rate is approximately 390 gpm**
  - **Cask loading pit swivel gate can be closed within 30 minutes**

  or
  - **Upper cover of the penetration assembly can be closed**
  - **Spent fuel pool level decrease is about 1 foot in 30 minutes**
  - **Loading hall floor drains (10”) convey water to the retention pit**
- **If leak is not isolated,**
  - **Maximum spent fuel pool drain down is to the bottom of gateway and takes 8 hours**
    - Bottom of gateway is 2.5 feet above top of fuel assemblies stored in the racks
    - Fuel building divided into 2 flood divisions and division under loading hall can accommodate entire SFP inventory loss without flooding the loading hall

SFCTF Operating Advantages and History

- The U.S. EPR's under pit cask loading approach differs from the current cask loading approach in U.S. operating fleet; however, the U.S. EPR design has evolved from similar facilities in Europe.
- The design was developed in Europe to achieve the following advantages:
  - Preclude a cask-drop accident during lifting that could damage the building, stored fuel, or safety-related equipment.
  - Limit ionizing radiation exposure to plant personnel during cask loading.
  - Limit contamination of exterior cask surfaces.
  - Reduce overall cask loading time.
  - Reduce effluent and low-level radioactive waste from the cask loading operation.
- Similar SFCTF installed in sixteen P4 and N4 series plants in France.
  - More than 200 cumulative years of operational history (oldest is 25 years old)
  - About 1,000 loading operations

Acronyms and Abbreviations

FB	Fuel Building
gpm	gallons per minute
PWR	Pressurized Water Reactor
RB	Reactor Building
SFCTF	Spent Fuel Cask Transfer Facility
SFCTM	Spent Fuel Cask Transfer Machine
SFP	Spent Fuel Pool
SSE	Safe Shutdown Earthquake

United States Nuclear Regulatory Commission

Protecting People and the Environment

Presentation to the ACRS Full Committee – 594th Meeting

Briefing on EPR Design Certification Application Safety Evaluation Report with Open Item for Chapters 3, 9, 14, and 19

Getachew Tesfaye
Project Manager

May 10, 2012

Additional Presenters:

- Eric Reichelt, Chapter 3
- David Jaffe, Chapter 14
- Anne-Marie Grady Chapter 19

Major Milestones Chronology

U.S.NRC
United States Nuclear Regulatory Commission
Protecting People and the Environment

12/02/2004	Pre-application activities began
12/11/2007	Design Certification Application submitted
02/25/2008	Application accepted for review (docketed)
03/26/2008	Original review scheduled published
01/29/2009	Phase 1 review completed
04/08/2010	ACRS full committee briefing on Chapters 2, 4, 5, 8, 10, 12, and 17
08/10/2011	U.S. EPR FSAR, Revision 3 submitted
02/09/2012	Phase 2 review completed
02/23/2012	Phase 3, ACRS Subcommittee presentation completed
03/08/2012	ACRS full committee briefing on Chapters 6, 7, 11, 13, 15, 16, and 18
05/10/2012	ACRS full committee briefing on Chapters 3, 9, 14, and 19

Review Schedule

Task	Target Date
Phase 1 - Preliminary Safety Evaluation Report (SER) and Request for Additional Information (RAI)	Completed
Phase 2 - SER with Open Items	Completed
Phase 3 – Advisory Committee on Reactor Safeguards (ACRS) Review of SER with Open Items	July 2012
Phase 4 - Advanced SER with No Open Items	Schedule under review
Phase 5 - ACRS Review of Advanced SER with No Open Items	Schedule under review
Phase 6 – Final SER with No Open Items	Schedule under review
Rulemaking	Schedule under review

Review Strategy

- Pre-application activities
- Frequent interaction with the applicant
  - Teleconferences
  - Audits
  - Public meetings
- Use of Electronic RAI System (eRAI)
- Phase discipline

Chapter 3 - Design of Structures, Components Equipment and Systems

U.S.NRC
United States Nuclear Regulatory Commission
Protecting People and the Environment

SRP Section/Application Section		Number of OI
3.2	Classification of Structures, Systems, and Components	8
3.3	Wind and Tornado Loadings	1
3.4	Water Level (Flood) Design	1
3.5	Missile Protection	0
3.6	Protection Against Dynamic Effects Associated with Postulated Rupture of Piping	3
3.7	Seismic Design	8
3.8	Design of Category I Structures	13
3.9	Mechanical Systems and Components	33
3.10	Seismic and Dynamic Qualification of Mechanical and Electrical Equipment	0
3.11	Environmental Qualification of Mechanical and Electrical Equipment	1
3.12	ASME Code Class 1, 2, and 3 Piping Systems, Piping Components, and their Associated Supports	0
3.13	Threaded Fasteners (ASME Code Class 1, 2, and 3)	0
Totals		68

Chapter 3 - Key Confirmatory Analysis Performed by the NRC staff

U.S.NRC
United States Nuclear Regulatory Commission
Protecting People and the Environment

Section 3.6.3 Leak-Before-Break (LBB) Design

Regulatory Requirements and Acceptance Criteria

- 10 CFR Part 50, Appendix A, GDC 4, "Environmental and dynamic effects design bases" states "….However, dynamic effects associated with postulated pipe ruptures in nuclear power units may be excluded from the design basis when analyses reviewed and approved by the Commission demonstrate that the probability of fluid system piping rupture is extremely low with the design basis for the piping…"

- Safety margins for LBB analysis procedure
  - 10 on leak rate
  - 2 on crack size

Chapter 3 - Key Confirmatory Analysis Performed by the NRC staff

U.S.NRC
United States Nuclear Regulatory Commission
Protecting People and the Environment

Staff's Review of EPR LBB Methodology

Allowable Load Limit (ALL) methodology was used to bound LBB criteria

- Water hammer, corrosion, creep, fatigue, erosion, environmental conditions, and indirect sources are extremely low causes of pipe rupture
- Deterministic fracture mechanics evaluation has been completed and approved by the staff
- Leak detection systems are sufficiently reliable, redundant, diverse and sensitive, and that margin exists to detect the through-wall flaw used in the deterministic fracture mechanics evaluation

Chapter 3 - Key Confirmatory Analysis Performed by the NRC staff

U.S.NRC
United States Nuclear Regulatory Commission
Protecting People and the Environment

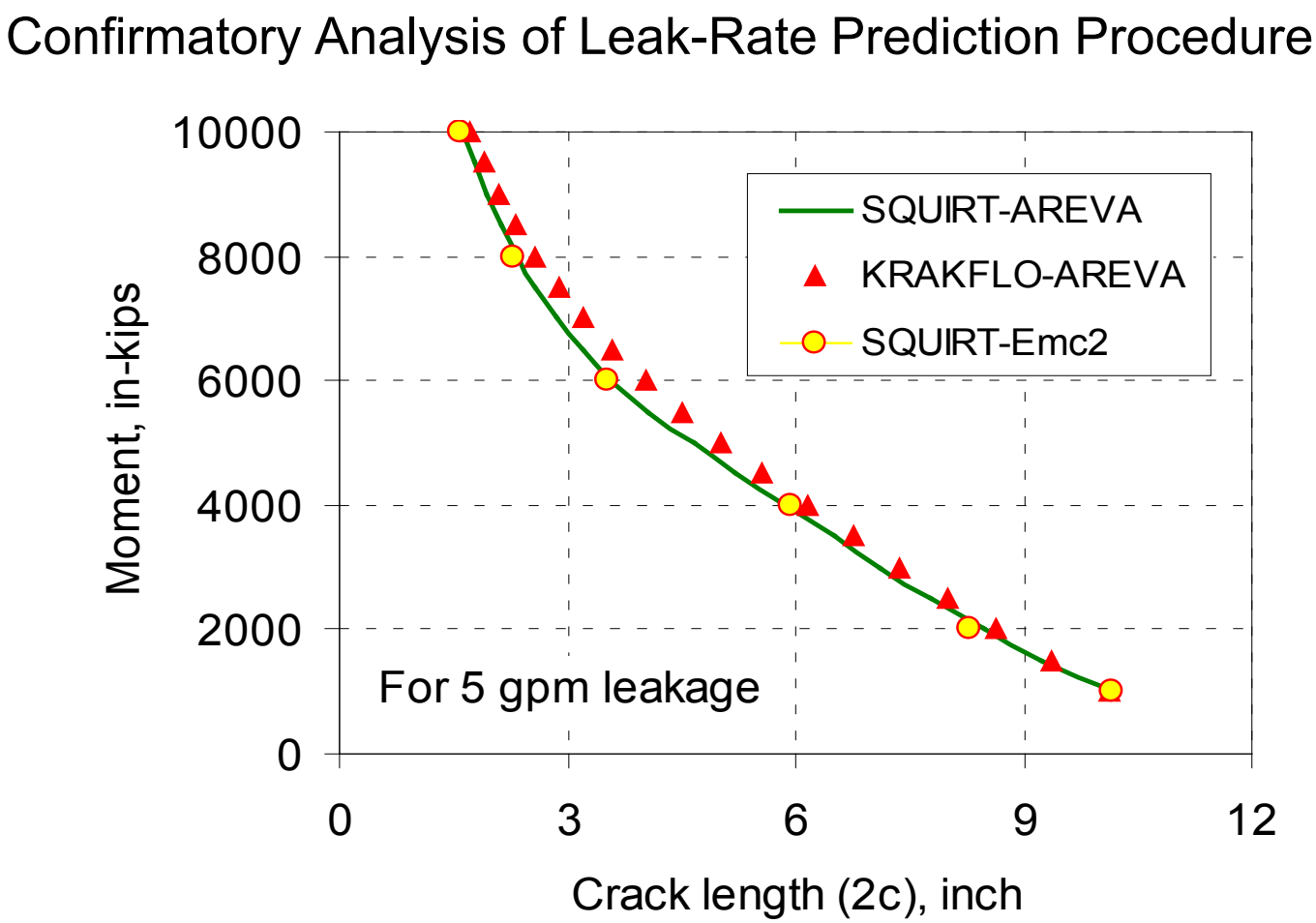

Chapter 3 - Key Confirmatory Analysis Performed by the NRC staff

U.S.NRC
United States Nuclear Regulatory Commission
Protecting People and the Environment

Confirmatory Analysis of ALL Diagram for Surge-Line Case

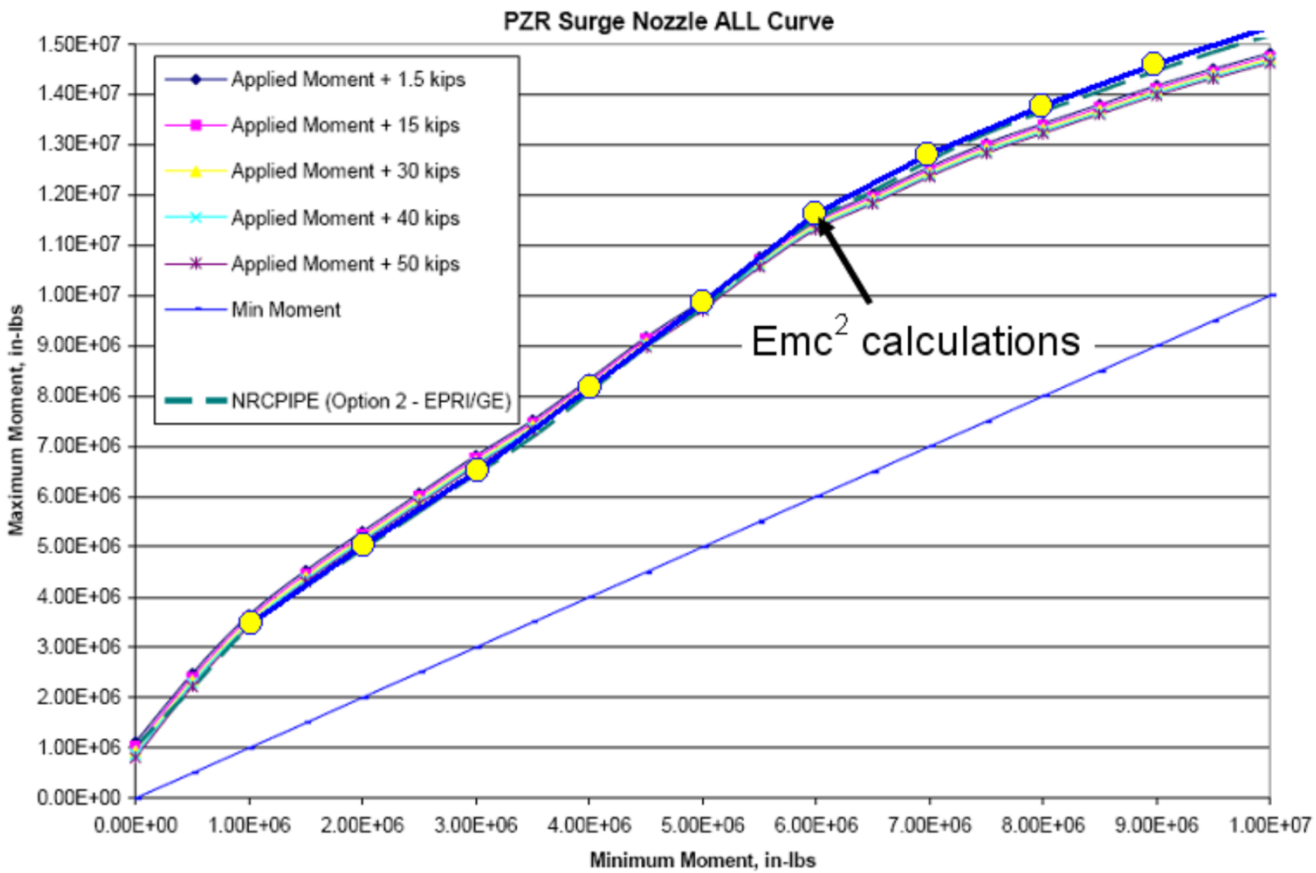

Chapter 3 - Key Confirmatory Analysis Performed by the NRC staff

U.S.NRC
United States Nuclear Regulatory Commission
Protecting People and the Environment

Overall Conclusions on LBB

- The staff evaluation concludes on a design specific and piping system specific basis that the acceptance criteria are satisfied, and, therefore, that dynamic effects of pipe rupture may be eliminated from design consideration
- There is one Open Item on Section 3.6.3 LBB Analyses - RAI 467, Question 03.06.02-28;

Chapter 9 – Auxiliary Systems

U.S.NRC
United States Nuclear Regulatory Commission
Protecting People and the Environment

SRP Section/Application Section		Number of OI
9.1.1	Criticality Safety of New and Spent Fuel Storage and Handling	10
9.1.2	New and Spent Fuel Storage	2
9.1.3	Fuel Pool Cooling and Purification System	2
9.1.4	Fuel Handling System	19
9.1.5	Overhead Heavy Load Handling System	1
9.2.1	Station Service Water System	0
9.2.2	Reactor Auxiliary Cooling Water Systems	0
9.2.4	Potable and Sanitary Water Systems	0
9.2.5	Ultimate Heat Sink	1
9.3.1	Compressed Air System	0

Chapter 9 – Auxiliary Systems (Continued)

U.S.NRC
United States Nuclear Regulatory Commission
Protecting People and the Environment

SRP Section/Application Section		Number of OI
9.3.2	Process and Post-accident Sampling Systems	2
9.3.3	Equipment and Floor Drainage System	4
9.3.4	Chemical and Volume Control System (PWR) (Including Boron Recovery System)	6
9.4.1	Control Room Area Ventilation System	6
9.4.2	Spent Fuel Pool Area Ventilation System	1
9.4.3	Auxiliary and Radwaste Area Ventilation System	4
9.4.4	Turbine Area Ventilation System	0
9.4.5	Engineered Safety Feature Ventilation System	2

Chapter 9 – Auxiliary Systems (Continued)

U.S.NRC
United States Nuclear Regulatory Commission
Protecting People and the Environment

SRP Section/Application Section		Number of OI
9.5.1	Fire Protection Program	3
9.5.2	Communications Systems	0
9.5.3	Lighting Systems	0
9.5.4	Emergency Diesel Engine Fuel Oil Storage and Transfer System	0
9.5.5	Emergency Diesel Engine Cooling Water System	0
9.5.6	Emergency Diesel Engine Starting System	0
9.5.7	Emergency Diesel Engine Lubrication System	0
9.5.8	Emergency Diesel Engine Combustion Air Intake and Exhaust System	0
Totals		**63**

Chapter 14 – Verification Programs

U.S.NRC
United States Nuclear Regulatory Commission
Protecting People and the Environment

SRP Section/Application Section		Status Number of OI
14.1	Specific Information for IPT	0
14.2	Initial Plant Test Program	7
14.3	Inspections, Tests, Analyses, and Acceptance Criteria	-
14.3.1	Selection Criteria	1
14.3.2	Structural and Systems Engineering	9
14.3.3	Piping Systems and Components	4

Chapter 14 – Verification Programs (Continued)

U.S.NRC
United States Nuclear Regulatory Commission
Protecting People and the Environment

SRP Section/Application Section		Number of OI
14.3.4	Reactor Systems	0
14.3.5	Instrumentation and Controls	5
14.3.6	Electrical Systems	0
14.3.7	Plant Systems	0
14.3.8	Radiation Protection	2
14.3.9	Human Factors Engineering	3
14.3.10	Emergency Planning (Plant-specific)	-
14.3.11	Containment Systems	1
14.3.12	Physical Security Hardware	1
	TOTAL	33

Chapter 14 – Clarification on Reactor Coolant Pump Seal Leakage Test Abstract

U.S.NRC
United States Nuclear Regulatory Commission
Protecting People and the Environment

- Question: Is the acceptance criteria for the reactor coolant pump (RCP) standstill seal performance in Test Abstract #161 consistent with the design basis described in Section 9.3.4.4.1 of the Staff's SER?
  - Acceptance Criterion in Test Abstract #161: The RCPs can be secured one at a time at HZP conditions and the RCP seal package, including the standstill seal, can be verified to limit RCS leakage within design limits.
  - In U.S. EPR FSAR Section 8.4, "Station Blackout" the design basis for the RCPs' "standstill seals" is stated as follows: Fifteen minutes into the event, the standstill seal system terminates RCP seal leakage. Standstill seal system leakage is 0.5 gpm per standstill seal. Total RCS leakage drops to 13 gpm or less; this leakage continues for the duration of the event.
- Conclusion: The RCP seal leakage is limited by the "standstill" seal during Test #161 and the design basis of 0.5 gpm per standstill seal is based upon the station blackout scenario as defined in Section 8.4.

Chapter 14 – Clarification on Severe Accident ITAAC

U.S.NRC
United States Nuclear Regulatory Commission
Protecting People and the Environment

- Question: Concerning severe accident ITAAC, is there a consistent process for developing the list of equipment to be addressed by ITAAC and how is the determination made as to what equipment should be on the list?

- Answer:
  - Process for determining the list is defined in SRP 14.3.
  - Use the guidance in the SRP Chapter 19 to determine the appropriate top-level design features for inclusion in Tier 1.
  - Important integrated plant safety analyses from Tier 2 should be considered, such as analyses of fires, floods, severe accidents, and shutdown risk.
  - The PRA for site-specific portions of the design should be evaluated during the COL review.

- As further stated in SRP 14.3, "These [design] features should be described in the design description, and the basic configuration ITAAC should verify that they exist. In general, the capabilities of the features need not be included in the ITAAC. Detailed analyses should be retained in Tier 2."

Chapter 19 - PRA and Severe Accident Evaluation

U.S.NRC
United States Nuclear Regulatory Commission
Protecting People and the Environment

Chapter 19.1 - Probabilistic Risk Assessment		
SE Section (Application Section)	**Subject**	**SE Open Items**
19.1.4.2 (19.1.2)	Quality of PRA	1
19.1.4.3 (19.1.3)	Special Design/Operational Features	0
19.1.4.4 (19.1.4)	Internal Events PRA At-Power	7
19.1.4.6.1 (19.1.5.1)	PRA-Based Seismic Margin Assessment	3
19.1.4.6.2 (19.1.5.2)	Internal Flooding PRA At-Power	0
19.1.4.6.3 (19.1.5.3)	Internal Fires PRA At-Power	1
19.1.4.6.4 (19.1.5.4)	Other External Events Risk Evaluation	0
19.1.4.7 (19.1.6)	PRA for Other Modes of Operation	0
19.1.4.5 (19.1.4.2)	Level 2 Internal Events PRA At-Power	2
19.1.4.6.2.9 & 19.1.4.6.3.8 (19.1.5.2.3 & 19.1.5.3.3)	Level 2 External Events PRA At-Power	0
19.1.4.7.2 (19.1.6.2)	Level 2 PRA for Other Modes of Operation	1
19.1.4.1 & 19.1.4.8 (19.1.1 & 19.1.7)	Uses and Applications of PRA	0
	Totals	**15**

Chapter 19 - PRA and Severe Accident Evaluation (continued)

U.S.NRC
United States Nuclear Regulatory Commission
Protecting People and the Environment

Chapter 19.2 - Severe Accident Evaluation		
SE Section (Application Section)	**Subject**	**Number of SE Open Items**
19.2.4.2 (19.2.2)	Severe Accident Prevention	0
19.2.4.3 (19.2.3)	Severe Accident Mitigation	2
19.2.4.4 (19.2.4)	Containment Performance Capability	2
19.2.4.5 (19.2.5)	Severe Accident Management	1
19.2.4.6 (19.2.6)	Consideration of Potential Design Improvements	0
	Totals	**5**

Chapter 19 - Key Confirmatory Analysis Performed by the NRC staff

U.S.NRC
United States Nuclear Regulatory Commission
Protecting People and the Environment

- AREVA analyzed Severe Accidents:
  - Used Modular Accident Analysis Program (MAAP) version 4.0.7
  - Modeled relevant scenarios, ie those with CDF > E-08
- NRC Confirmatory analysis
  - used MELCOR 1.8.6
  - modeled relevant and additional scenarios, similar nodalization
  - MAAP vs MELCOR comparison
- Confirms the adequacy of the SA mitigation features:
  - Combustible gas control (CGCS)
  - Core melt stabilization (CMSS)
  - Severe accident heat removal (SAHRS)

Chapter 19 - Key Confirmatory Analysis Performed by the NRC staff (Continued)

- Open Items
  - Confirmatory calculation identified potential for delayed relocation of core debris into the reactor pit
  - AREVA will model, addressing steam explosions
- AREVA has revised their SA analysis
  - Confirmatory calculation will reflect changes

U.S.NRC

United States Nuclear Regulatory Commission

Protecting People and the Environment

END

U.S.NRC

UNITED STATES NUCLEAR REGULATORY COMMISSION

Protecting People and the Environment

Overview of the State-of-the-Art Reactor Consequence Analyses (SOARCA)

Presentation to the ACRS

May 10, 2012

Objectives

SOARCA was initiated to develop a body of knowledge on the realistic outcomes of severe reactor accidents

- Update the quantification of offsite consequences
- Incorporate plant changes not reflected in earlier assessments
- Evaluate the benefits of security-related improvements
- Incorporate state-of-the-art modeling (MELCOR/MACCS2)
- Enable the NRC to communicate severe accident aspects of nuclear safety

Approach

- Focus on important severe accident scenarios
- Realistic assessments and detailed analyses
- Integrated analyses
- Incorporated recent physical experiments
- Treatment of seismic impacts on evacuation
- Range of health effects modeling

Conclusions for Pilot Plants

- When operators are successful in using available onsite equipment during the accidents analyzed in SOARCA, they can prevent the reactor from melting, or delay or reduce releases of radioactive material to the environment.
- SOARCA analyses indicate that all modeled accident scenarios, even if operators are unsuccessful in stopping the accident, progress more slowly and release much smaller amounts of radioactive material than calculated in earlier studies.

Conclusions for Pilot Plants (cont.)

Iodine release without 10CFR50.54(hh)

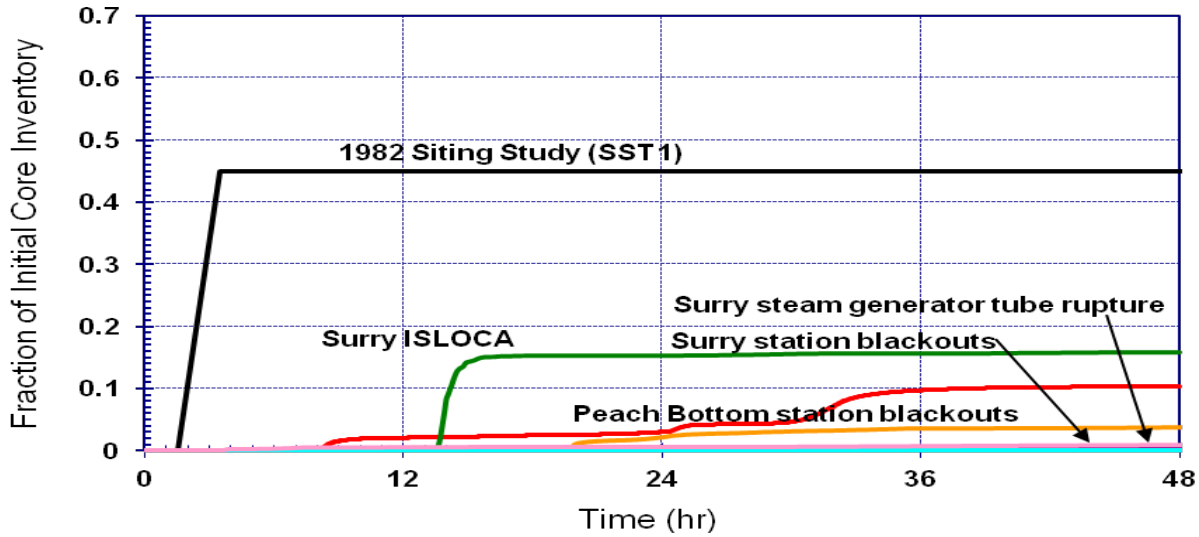

Cesium Release without 10CFR50.54(hh)

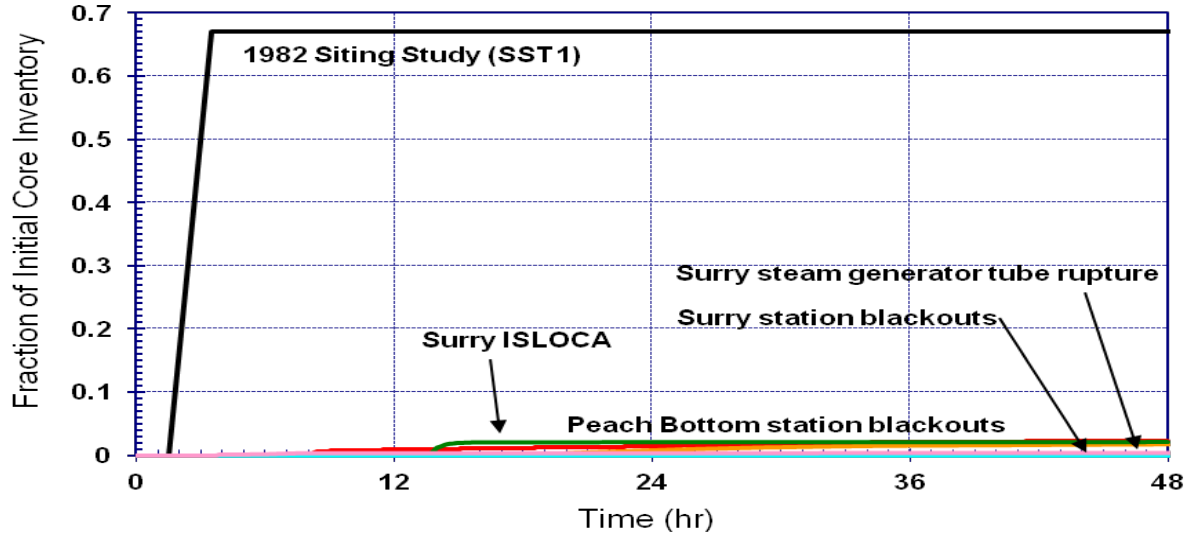

Conclusions for Pilot Plants (cont.)

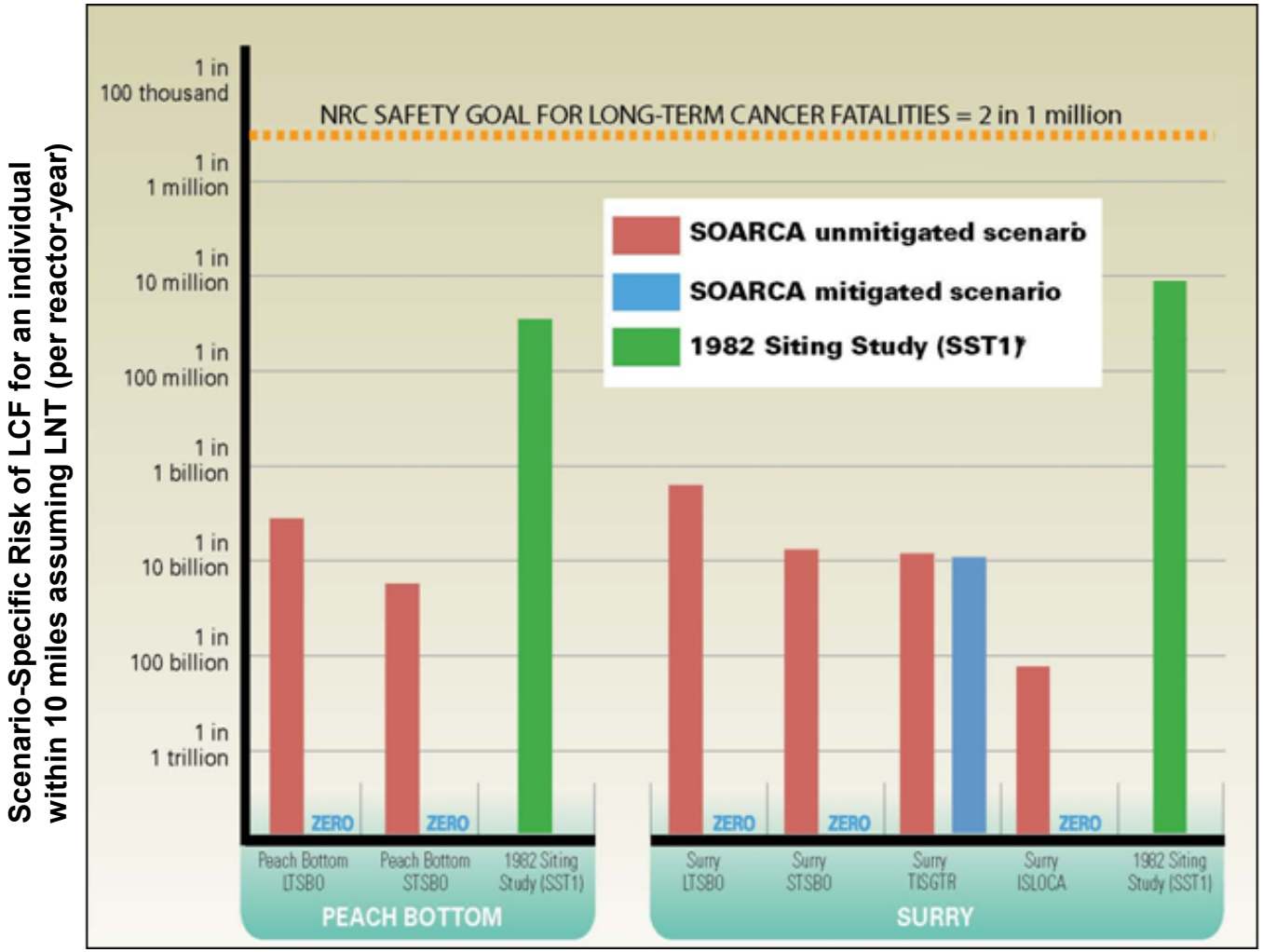

Note: Comparisons of SOARCA's calculated long-term cancer fatality risks to the NRC Safety Goal and the average annual U.S. cancer fatality risk from all causes are provided to give context. Relative to the safety goal comparison, the safety goal is intended to encompass all accident scenarios. SOARCA does not examine all scenarios typically considered in PRA. Additionally, estimated risks below 1 x 10^{-7} per reactor year should be viewed with caution because of the potential impact of events not studied in the analyses and the inherent uncertainty in very small calculated numbers.

* The 1982 Siting Study did not calculate the risk of long-term cancer deaths. Therefore, to compare the 1982 Siting Study SST1 results to SOARCA's results for risk of long-term cancer death, the SST1 release was put into the MACCS2 code files for Peach Bottom and Surry unmitigated STSBO calculations.

Peer Review

- Peer review by independent experts in the fields of risk analysis, severe accident research, emergency preparedness, and radiation health effects
- Reviewers examined the methods and results of the research and helped improve the work by identifying the project's strengths and weaknesses
- SOARCA team has incorporated the experts' feedback into the reports (e.g., SRV failure timing and mode)

SOARCA vs. Fukushima

- RCIC operation
- Hydrogen release and combustion
- 48 hour truncation
- Multiunit risk
- Spent fuel pool risk/consequences

Status

- Staff believes SOARCA-type analysis for all 8 plant types or 104 reactors as originally described (now 108 licensed reactors) is not necessary
  - Provided body of knowledge updating understanding of severe accident progression, mitigation, and consequences
    - Site Level 3 PRA will continue to add to this body of knowledge
  - Provided flexible and updated models and methods
  - SOARCA models and methods being used for other programs (Fukushima-related plant improvements, Spent Fuel Pool Scoping Study, Site Level 3 PRA)
- Staff recommends limited follow-on research
- Deliverables to EDO in mid-June
  - Commission memo transmitting SOARCA reports to the Commission
  - Notation-vote paper recommending analysis of an ice condenser plant

U.S.NRC

United States Nuclear Regulatory Commission

Protecting People and the Environment

SOARCA Uncertainty Analysis

Presented by: Tina Ghosh, PhD

ACRS Meeting
May 10, 2012

Outline

- Goals
- Approach
- Selected parameters
- Preliminary analyses
- Status and schedule

Goals of the Uncertainty Analysis

- Develop insight into overall sensitivity of SOARCA results to uncertainty in inputs
- Identify most influential input parameters for releases and consequences
- Demonstrate uncertainty analysis methodology

Approach

- Focus is on epistemic (state-of-knowledge) uncertainty in parameter values
  - Aleatory (random) uncertainty due to weather is handled in the same way as the SOARCA study
- Peach Bottom, unmitigated, long-term station blackout scenario chosen
- Scenario definition not changed after Fukushima
  - A separate qualitative discussion planned for an appendix
- Looking at uncertainty in key model inputs
  - MELCOR parameters
  - MACCS2 parameters

Approach (continued)

- Key uncertain input parameters were identified
- Uncertainty in these parameters propagated in two steps using Monte Carlo and Latin Hypercube (LHS) sampling:
  - A set of source terms generated using MELCOR model
  - A distribution of consequence results generated using MACCS2 model
- An epistemic sample set of 300 generated to complete a corresponding number of individual code runs (Monte Carlo “realizations”) to evaluate the influence of the uncertainty on the estimated outcome

Approach (continued)

- Results reported will include:
  - Analysis of source term releases including cesium and iodine release over time
  - Distribution of latent cancer fatality risk, with three dose threshold models
  - Description of most influential uncertain parameters in study
- Tools used to analyze results include statistical regression-based methods as well as scatter plots and phenomenological investigation of individual realizations of interest
- Guidance solicited from SOARCA peer reviewers on the uncertainty analysis plan documenting the approach, chosen parameters and distributions

Process for Choosing Parameters and Distributions

- Core team of staff from SNL and NRC with expertise in probability and statistics, uncertainty analysis, and MELCOR and MACCS2 modeling for SOARCA
- Approach used informal expert elicitation, based on a PIRT (phenomena identification, and ranking table) process
- Focus on confirming that the parameter representations appropriately reflect key sources of uncertainty, are reasonable, and have a defensible technical basis
- Attempt to obtain contribution from uncertainty across the spectrum of phenomena operative in the analyses, through a balanced depth and breadth of coverage

MELCOR Uncertain Parameters

Sequence Issues

- Battery duration
- SRV stochastic failure rate

In-Vessel Accident Progression

- SRV thermal seizure criteria, and open area fraction
- Main steam line (MSL) creep rupture open area fraction
- Zircaloy melt breakout temperature
- Molten clad drainage rate
- Fuel failure criterion
- Debris radial relocation time constants

Ex-vessel Accident Progression

- Debris lateral relocation time constants

Containment & building behavior

- Drywell liner failure flow area
- Drywell head flange leakage parameters
- Hydrogen ignition criteria (where flammable)
- Railroad doors open fraction

Fission Product release, transport, and deposition

- Cesium and iodine chemical forms
- Aerosol deposition parameters

MACCS2 Uncertain Parameters

Atmospheric Transport and Deposition

- Wet deposition model linear coefficient
- Dry deposition velocities
- Dispersion parameters

Emergency planning and response

- Shielding factors
- Hotspot and normal relocation
- Evacuation delay and speed

Health Effects

- Early health effects
- Latent health effects
  - Groundshine dose coefficients
  - Dose and dose rate effectiveness factors
  - Inhalation dose coefficients
  - Cancer mortality risk coefficients

Preliminary Analyses
Source Term/MELCOR

3 probabilistic cases:

- (1) Combined scenario probabilistic case using distributions as laid out in draft NUREG/CR, chapter 4, with SRV stochastic, SRV thermal, and MSL creep failures occurring.
- (2) SRV Thermal scenario case keeping the SRV thermal seizure open area constant at 1
- (3) SRV stochastic scenario case keeping the SRV stochastic failure rate constant, at the SOARCA estimate value

Preliminary Analyses
Consequence/MACCS2

- Source terms from combined scenario case
- Using LNT model
- Aleatory & epistemic uncertainty

Preliminary Analyses
Summary Results

- MELCOR: Cesium release timings are similar to SOARCA estimate, magnitude of release at 48 hours generally slightly higher than SOARCA estimate (but still far below Siting Study SST1 results)

- MACCS2: Distribution of risk results for latent cancer fatality risk similar to the SOARCA estimate, and early fatality risk essentially zero

UA Status – In Progress

- A few MELCOR parameter distributions under revision
- Uncertain parameter importance analyses
- Additional MELCOR phenomenological insights and additional MACCS2 results and analyses
- Separate sensitivity analyses, for example: (1) habitability criterion, (2) evaluation of the timing of two operator actions in the unmitigated LTSBO, (3) lower head penetration failure
- An appendix with discussion and qualitative comparison with Fukushima

Schedule

- Commission memorandum forwarding results of the SOARCA pilot plant study will contain short discussion on status of UA and interim conclusions (June 2012)
- Draft report documenting UA (September 2012)
- Present final results and updated insights to ACRS (October 2012)
  - Staff is seeking an ACRS letter on the final report
- Submit UA report for publication (November 2012)

U.S.NRC

UNITED STATES NUCLEAR REGULATORY COMMISSION

Protecting People and the Environment

Questions?

St. Lucie Unit 1
Extended Power Uprate (EPU)
ACRS Committee

May 10, 2012

Agenda

- **EPU Overview**
  - Introduction…… Rich Anderson
  - Plant Changes…… Jack Hoffman
- **Materials**
  - Steam Generators …….....……. Rudy Gil
- **Analyses**
  - Fuel and Core ……....…… Jay Kabadi
  - Safety Analysis …….…… Jay Kabadi
- **Acronyms**

St. Lucie Unit 1

- Located on Hutchinson Island, southeast of Fort Pierce, Florida
- Pressurized Water Reactor (PWR)
- Combustion Engineering Nuclear Steam Supply System (NSSS)
- Westinghouse Turbine Generator
- Architect Engineer – Ebasco
- Fuel supplier - AREVA
- Unit output 950 MWe gross

St. Lucie

- **Original operating license issued in 1976**
- **Steam Generators (SGs) replaced in 1998**
- **Renewed operating license issued in 2003**
- **Installation of a new single-failure proof crane to support spent fuel dry storage operations in 2003**
- **Reactor Vessel Head and Pressurizer were replaced in 2005**
- **Replaced 2 of 4 Reactor Coolant Pump motors in 2010 and 2012**
  - The remaining motor replacements planned for 2013 and 2015

St. Lucie

- **Licensed Core Power**
  - Original Licensed Core Power 2560 MWt
  - Current Licensed Core Power 2700 MWt
    - -- 5.5% Stretch Uprate (1981)
  - EPU Core Power 3020 MWt
    - -- Implement 2012

FPL

FPL is requesting approval for a 12% power level increase for St. Lucie Unit 1

- **12% increase in licensed core power level (3020 MWt)**
  - 10% Power Uprate
  - 1.7% Measurement Uncertainty Recapture
  - (2700 x 1.10) x 1.017 ~ 3020 MWt
- **Classic NPSH requirements for ECCS pumps are met without credit for containment overpressure**
- **Grid stability studies have been completed and approved for the EPU full power output**
- **Final modifications to support EPU operation are being implemented in 2012**
- **FPL has addressed action items from the ACRS Subcommittee Meeting on April 26, 2012**

FPL

St. Lucie Unit 1 is a Combustion Engineering NSSS design with two Steam Generators and four Reactor Coolant Pumps

Combustion Engineering NSSS

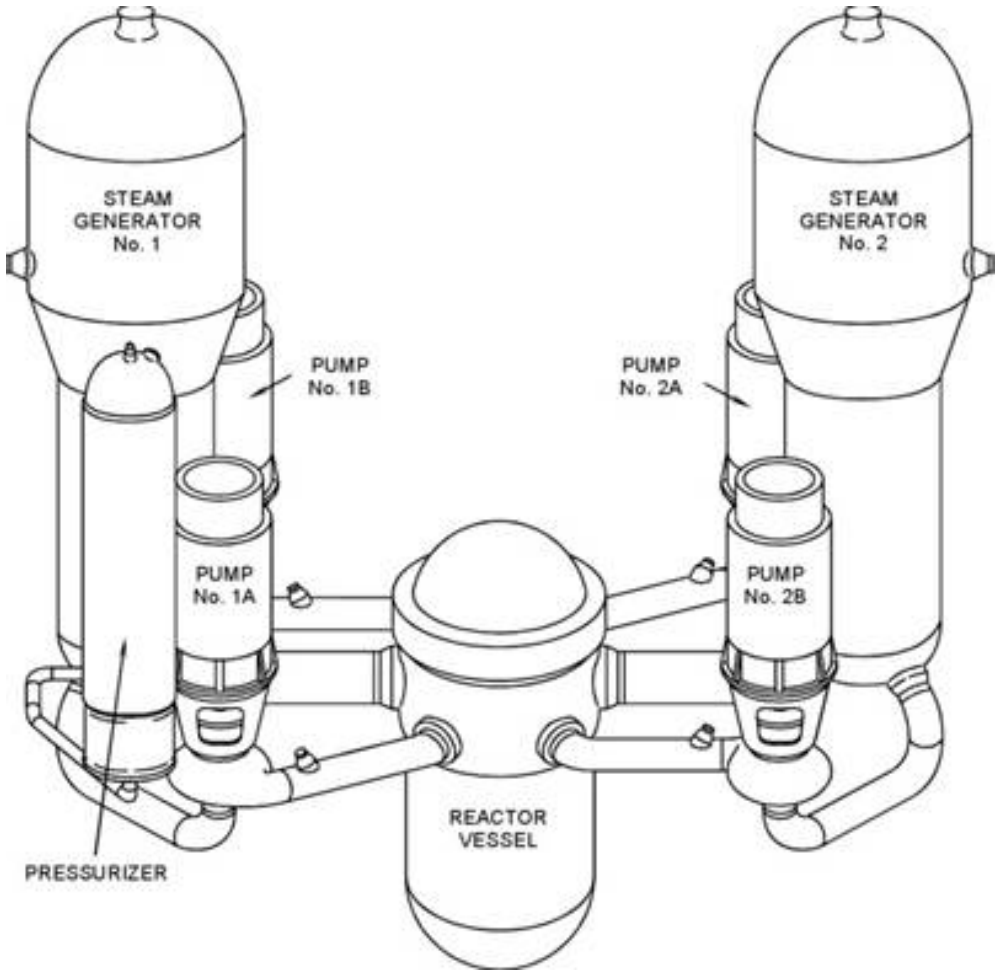

Analyses were performed to evaluate the changes in design parameters

Parameter	Original	Current	EPU	EPU Change
Core Power (MWt)	2560	2700	3020	+320
RCS Pressure (psia)	2250	2250	2250	0
Taverage (ºF)	565.6	574.2	578.5	+4.3
Vessel Inlet (ºF)	542.0	549.0	551.0	+2.0
Vessel Outlet (ºF)	589.2	599.4	606.0	+6.6
Delta T (ºF)	47.2	50.4	55.0	+4.6
Thermal Design Flow (gpm/loop)	185,000	182,500	187,500	+5,000
Core Bypass (%)	3.7	3.9	4.2	+0.3
Steam Pressure (psia)	848	896	890	-6
Moisture Carryover (maximum, %)	0.20	0.10	0.10	0
Steam Mass Flow (10^6 lb/hr)	11.18	11.80	13.42	+1.62

FPL

Modifications will be made in support of safety

- Increase Safety Injection Tank design pressure
- Increase Hot Leg Injection flow
- Add online Containment mini-purge capability
- Upgrade Main Steam Isolation Valves (MSIVs)
- Nuclear Steam Supply System (NSSS) setpoints
- Add neutron absorption material to Spent Fuel Pool storage racks
- Install Leading Edge Flow Measurement (LEFM) System
- Environmental Qualification (EQ) radiation shielding changes for electrical equipment
- Safety related piping support modifications
- Raise Reactor Protection System (RPS) Steam Generator low-level trip setpoint (plant risk profile enhancement)

FPL

Modifications will be made in support of power generation at the EPU power level

- **Steam Path**
  - Replace High and Low Pressure Turbine steam paths
  - Replace main turbine Electro Hydraulic Control (EHC) System
  - Replace Moisture Separator Reheaters (MSRs) and upgrade level controls
  - Increase Steam Bypass Control System capacity and upgrade control system
  - Upgrade steam and power conversion system instrumentation
  - Modify Main Steam piping supports
- **Condensate and Feedwater**
  - Replace Main Feedwater Pumps
  - Upgrade Main Feedwater Regulating Valves and controls
  - Replace #5 High Pressure Feedwater Heaters
  - Upgrade Main Condenser
  - Modify Main Feedwater piping supports

- Continued on next page -

FPL

Modifications will be made in support of power generation at the EPU power level (continued)

- **Heater Drains**
  - Replace Heater Drain pumps
  - Upgrade Heater Drain valves
- **Auxiliary Support Systems**
  - Replace Turbine Cooling Water heat exchangers
- **Other Balance of Plant items**
  - Balance of Plant (BOP) setpoints
  - Condensate piping supports

- Continued on next page -

Modifications will be made in support of power generation at the EPU power level (continued)

- **Electrical Modifications**
  - Generator upgrades including
    - -- Stator rewind
    - -- Rotor replacement
    - -- Replace bushings and current transformers
    - -- Replace hydrogen coolers
    - -- Increase hydrogen pressure
    - -- Replace exciter air coolers
  - Install Power System Stabilizer
  - Upgrade Iso-Phase Bus Duct cooling system
  - Increase margin on AC electrical buses
  - Upgrade Main Transformer cooling systems
  - Switchyard modifications

FPL

Agenda

- **EPU Overview**
  - Introduction…… Rich Anderson
  - Plant Changes…… Jack Hoffman
- **Materials**
  - Steam Generators …….....……. Rudy Gil
- **Analyses**
  - Fuel and Core ……....…… Jay Kabadi
  - Safety Analysis …….…… Jay Kabadi
- **Acronyms**

Analyses demonstrated acceptable Steam Generator tube wear at EPU conditions

Steam Generator Analysis Results

Parameter	Acceptance Criteria	Results
Maximum fluid-elastic instability velocity ratio	< 1.0	Met with Margin *
Maximum vortex shedding resonance amplitude	< 0.015 in.	Met with Margin *
Accumulated tube wear over the 40 year design life	< 40% nominal tube wall thickness	Met with Margin *

* Proprietary information, reference LAR Section 2.2.2.5.2.5.4

FPL

Based on excellent Steam Generator operating performance no tube wear issues are expected at EPU conditions

- **The maximum fluid-elastic instability velocity ratio is within the acceptance criteria and current experience base**
- **Many years of operating experience with no indication of tube vibration problems with Steam Generators comparable to St. Lucie Unit 1**
- **Periodic Steam Generator tube inspections at St. Lucie Unit 1 have provided no indication of unusual tube wear**
  - The Steam Generators have performed very well with only 14 tubes plugged in SG-1A and 1 tube in SG-1B
- **Although not anticipated by analysis, on-going Steam Generator tube inspections will provide early indication if problems were to occur**
  - Steam Generator inspections planned for first refueling outage after operation at EPU conditions

FPL

Agenda

- **EPU Overview**
  - Introduction…… Rich Anderson
  - Plant Changes…… Jack Hoffman
- **Materials**
  - Steam Generators …….....……. Rudy Gil
- **Analyses**
  - Fuel and Core ……....…… Jay Kabadi
  - Safety Analysis …….…… Jay Kabadi
- **Acronyms**

Margins to key safety parameters are maintained

Core Design

- **Representative core designs were used for EPU analyses**
- **Core design limits are reduced to offset effect of EPU and maintain margins to fuel design limits**
  - Total integrated Radial Peaking Factor (F_r^T) COLR limit reduced from 1.70 to 1.65
  - Linear heat rate COLR limit reduced from 15.0 kW/ft to 14.7 kW/ft
- **Normal incore fuel management methods utilized to meet reduced limits with increased energy needs**
  - Feed enrichment & feed batch size
    - -- Maximum enrichment changed from 4.5 to 4.6 wt% U-235 planar average
  - Burnable absorber placement
  - Core loading pattern

FPL

Margins to key safety parameters are maintained (continued)

Core Design (continued)

- **Moderator Temperature Coefficient limits are unchanged**
- **Shutdown Margin requirement is unchanged for at-power operation**
  - Larger doppler power defect at EPU conditions, but Shutdown Margin (SDM) remains acceptable
- **Boron requirements met**
  - Boron delivery capability improved by changes to boron requirements for the Boric Acid Makeup Tank (BAMT), Refueling Water Tank (RWT) and Safety Injection Tanks (SITs)
  - Minimum refueling boron increased to 1900 ppm

FPL

Approved methods used for safety analysis as supplemented by subsequent RAI responses

- **Codes and methodologies**
  - S-RELAP5: large & small break LOCA
  - S-RELAP5: Non-LOCA transients
  - XCOBRA-IIIC: DNB analysis of the nuclear fuel
- **Safety analyses include additional input parameters biasing beyond the requirements of approved methodology**

FPL

Conservative analysis methods applied for non-LOCA events with all results meeting acceptance criteria

	Event	Criteria	Result
Decrease in RCS Flow	Loss of Flow (AOO)	MDNBR ≥ 1.164	1.319
	Locked Rotor (PA)	Rods-in-DNB ≤ 19%	0%
RCS Overheating (Decrease in Secondary Heat Removal)	Loss of Load (AOO)	RCS Press. ≤ 2750 psia	2744 psia
		MSS Press. ≤ 1100 psia	1092 psia
	Loss of Load to one SG (AOO)	MDNBR ≥ 1.164	1.867
	Loss of Feedwater (AOO)	Liq. Vol. ≤ Pressurizer Vol.	~70% span
		RCS Subcooling ≥ 0°F	47°F
	FW Line Break (PA)	RCS Subcooling ≥ 0°F @ time when AFW heat removal matches core decay heat	9°F

FPL

Conservative analysis methods applied for non-LOCA events with all results meeting acceptance criteria (continued)

	Event	Criteria	Result
RCS Overcooling (Increase in Secondary Heat Removal)	Increase in Steam Flow (AOO)	MDNBR ≥ 1.164	1.385
	Inadvertent Opening of SG Safety Valve (AOO)	MDNBR ≥ 1.164 (No loss of SDM)	SDM > 0 pcm
	HFP Pre-scram MSLB (PA)	Rods-in-DNB ≤ 1.2% (OC) & ≤ 21% (IC)	0.46%
		Fuel Melt ≤ 0.29% (OC) & ≤ 4.5% (IC)	0%
	HZP/HFP Post-scram MSLB (PA)	Rods-in-DNB ≤ 1.2% (OC) & ≤ 21% (IC)	0%
		Fuel Melt ≤ 0.29% (OC) & ≤ 4.5% (IC)	0.02%

FPL

Conservative analysis methods applied for non-LOCA events with all results meeting acceptance criteria (continued)

	Event	Criteria	Result
Reactivity Addition	CEA Withdrawal @ HZP (AOO)	MDNBR ≥ 1.164	6.087
		Fuel CL Temp. ≤ 4908°F	2036°F
	CEA Withdrawal @ Power (AOO)	MDNBR ≥ 1.164	1.239
		RCS Press. ≤ 2750 psia	2657 psia Bounded by LOEL
	CEA Drop (AOO)	MDNBR ≥ 1.164	1.566
		Peak LHR ≤ 22.279 kW/ft	20.75 kW/ft
	CEA Ejection (PA)	RCS Press. ≤ 3000 psia	2696 psia Bounded by LOEL
		Fuel Enthalpy ≤ 200 cal/g	166.4 cal/g
		Rods-in-DNB ≤ 9.5%	0%
		Fuel Melt ≤ 0.5%	0%

FPL

Conservative analysis methods applied for non-LOCA events with all results meeting acceptance criteria (continued)

	Event	Criteria	Result
Reactivity Addition	Boron Dilution (AOO)	Time-to-Criticality ≥ 15 min. (Modes 1 – 5)	≥ 25.46 min.
		Time-to-Criticality ≥ 30 min. (Mode 6)	39.56 min.
RCS Mass Addition	Inadvertent ECCS/CVCS (AOO)	Liq. Vol. ≤ Pressurizer Vol.	~1423 ft^3 @ 10 min. after High Level Alarm
RCS Depressurization	Inadvertent Opening of a Pressurizer PORV (AOO)	MDNBR ≥ 1.164	1.350
		Liq. Vol. ≤ Pressurizer Vol.	~1399 ft^3 @ 7 min. after PORV opens

FPL

Small break LOCA analysis demonstrates acceptable results

- **Incorporates additional analysis from recent licensing experience**
- **Not impacted by thermal conductivity degradation**

	Pre – EPU (Appendix K)	EPU (Appendix K)	Limit
Limiting Break Size	4.28-inch	3.65-inch	-
PCT (°F)	1765	1807	2200
Maximum Transient Local Oxidation (%)	2.50	3.47	17.0
Maximum Core-Wide Oxidation (%)	< 1.0	0.04	1.0

FPL

Large Break LOCA analysis demonstrates acceptable results

- Incorporates additional analysis from recent licensing experience
- Includes provision for Thermal Conductivity Degradation (TCD)
- Analysis methodology and plant configuration for St. Lucie Unit 1 resulted in no significant impact due to TCD

10 CFR 50.46 Requirement	Appendix K Pre-EPU Value	RLBLOCA EPU Value	Acceptance Criteria
95/95 Peak Cladding Temperature (°F)	2079	1667	< 2200
50th Percentile Peak Cladding Temperature (°F)	N/A	1492	-----
95/95 Maximum Local Oxidation (%)	5.38	3.93	< 17.0
95/95 Core Wide Oxidation (%)	0.70	0.021	< 1.0
Coolable Geometry	Long term cooling is maintained via operator actions. No impact on coolable geometry.		
Long-Term Cooling			

FPL

Agenda

- **EPU Overview**
  - Introduction…… Rich Anderson
  - Plant Changes…… Jack Hoffman
- **Materials**
  - Steam Generators …….....……. Rudy Gil
- **Analyses**
  - Fuel and Core ……....…… Jay Kabadi
  - Safety Analysis …….…… Jay Kabadi
- **Acronyms**

Acronyms

AFW	Auxiliary Feedwater
AOO	Anticipated Operational Occurrences
BAMT	Boric Acid Makeup Tank
BOP	Balance of Plant
CHF	Critical Heat Flux
CL	Center Line
CLB	Current Licensing Basis
CVCS	Chemical and Volume Control System
DNB	Departure From Nucleate Boiling
ECCS	Emergency Core Cooling System
EHC	Electro Hydraulic Control
EPU	Extended Power Uprate
EQ	Environmental Qualification
FCM	Fuel Centerline Melt
F_r^T	Total Radial Peaking Factor
ft	Feet
GPM	Gallons per minute
HFP	Hot Full Power
HTP	High Thermal Performance
HZP	Hot Zero Power
IC	Inside Containment
Keff	K-effective
lb/hr	Pounds per hour
LEFM	Leading Edge Flow Meter
LHGR	Linear Heat Generation Rate
Liq	Liquid
LOCA	Loss of Coolant Accident
LOEL	Loss of Electrical Load
MDNBR	Minimum Departure From Nucleate Boiling Ratio
MSIV	Main Steam Isolation Valve
MSLB	Main Steam Line Break
MSR	Moisture Separator Reheater
MSS	Main Steam System
MWe	Megawatts electric
MWt	Megawatts thermal
NPSH	Net Positive Suction Head
NSSS	Nuclear Steam Supply System
OC	Outside Containment
OD	Outside Dimension
PA	Postulated Accident
PLHR	Peak Linear Heat Rate
PORV	Power Operated Relief Valve
PPM	Parts per Million
Pres	Pressure
PSIA	Pound per square inch - absolute
PWR	Pressurized Water Reactor
PZR	Pressurizer
RCS	Reactor Coolant System
RIS	Regulatory Issue Summary
RPS	Reactor Protection System
RTP	Rated Thermal Power
RWT	Refueling Water Tank
SIT	Safety Injection Tank
SDM	Shutdown Margin
Sec	Second
SG	Steam Generator
TCD	Thermal Conductivity Degradation
V	Velocity
Vol	Volume
ρ	Density

U.S.NRC
UNITED STATES NUCLEAR REGULATORY COMMISSION
Protecting People and the Environment

594th Meeting of the Advisory Committee on Reactor Safeguards

St. Lucie, Unit 1 Extended Power Uprate

May 10, 2012

U.S.NRC
UNITED STATES NUCLEAR REGULATORY COMMISSION
Protecting People and the Environment

Introduction

Allen G. Howe
Deputy Division Director
Division of Operating Reactor Licensing
Office of Nuclear Reactor Regulation

Tracy J. Orf
Project Manager
Division of Operating Reactor Licensing
Office of Nuclear Reactor Regulation

U.S.NRC
UNITED STATES NUCLEAR REGULATORY COMMISSION
Protecting People and the Environment

EPU Overview

- Background
  - ❖ St. Lucie 1 EPU Application – November 22, 2010
  - ❖ 2700 to 3020 MWt, 11.85 % increase (+320 MWt)
    - Includes a 10 % power uprate and a 1.7 % MUR
    - 18 % increase above original licensed thermal power
- EPU Review Schedule
  - ❖ Followed RS-001
  - ❖ Supplemental responses to NRC staff RAIs
  - ❖ January 2012 Audit

U.S.NRC
UNITED STATES NUCLEAR REGULATORY COMMISSION
Protecting People and the Environment

Disposition of Open Items

- U-bend holdup
- Audit reports on the staff's confirmatory analyses using FRAPCON
- Disposition of supplemental LOCA analyses

U.S.NRC
UNITED STATES NUCLEAR REGULATORY COMMISSION
Protecting People and the Environment

Topics for Full Committee

- EPU Overview
- Accident Analyses
- Thermal Conductivity Degradation

U.S.NRC
UNITED STATES NUCLEAR REGULATORY COMMISSION
Protecting People and the Environment

St. Lucie Unit 1 EPU Accident Analyses

Samuel Miranda and Jennifer Gall
Reactor Systems Branch
Office of Nuclear Reactor Regulation

U.S.NRC
UNITED STATES NUCLEAR REGULATORY COMMISSION
Protecting People and the Environment

Review of Accident Analyses

- Feedwater Line break
- Mass Addition Events
  - ❖Inadvertent ECCS actuation
  - ❖CVCS Malfunction
  - ❖Inadvertent opening of a PORV
- Loss of Coolant

U.S.NRC
UNITED STATES NUCLEAR REGULATORY COMMISSION
Protecting People and the Environment

Feedwater Line Break (FWLB)

- FPL defined FWLB as a cooldown event in the licensing basis
- FPL did not analyze FWLB, since the Main Steam Line Break analysis produces a more severe cooldown
- The staff did not accept this approach

U.S.NRC
UNITED STATES NUCLEAR REGULATORY COMMISSION
Protecting People and the Environment

FWLB

- FWLB is treated as a heatup event in RG 1.70 and SRP Section 15.2.8
- The staff requested an analysis of FWLB as a heatup event
- FWLB analysis results were audited on January 30-31
- Acceptable FWLB analysis results: RCS subcooling is maintained

U.S.NRC
UNITED STATES NUCLEAR REGULATORY COMMISSION
Protecting People and the Environment

Inadvertent Actuation of ECCS

- Inadvertent Actuation of ECCS can fill the pressurizer, and pass water through the PORVs.
- A small break LOCA is created if a PORV sticks open.
- AOOs are not permitted to develop into events of a more serious class.

U.S.NRC
UNITED STATES NUCLEAR REGULATORY COMMISSION
Protecting People and the Environment

Inadvertent Actuation of ECCS

- Inadvertent ECCS actuation is not in St. Lucie Unit 1's licensing basis
- Shutoff head of ECCS (SI pumps) is lower than RCS nominal pressure
- Analysis was not provided in the EPU application

U.S.NRC
UNITED STATES NUCLEAR REGULATORY COMMISSION
Protecting People and the Environment

Inadvertent Actuation of ECCS

- Charging pumps (PDPs) have been added to the ECCS since the FSAR
- Charging pumps can fill the pressurizer and cause water relief through the PORVs

U.S.NRC
UNITED STATES NUCLEAR REGULATORY COMMISSION
Protecting People and the Environment

Non-Escalation Criterion

- "By itself, a Condition II incident cannot generate a more serious incident of the Condition III or IV type without other incidents occurring independently."
- NRC reminded licensees that this criterion is in the plant licensing bases, and therefore must be met (RIS 2005-29).

U.S.NRC
UNITED STATES NUCLEAR REGULATORY COMMISSION
Protecting People and the Environment

Inadvertent Actuation of ECCS

- Conservative composite of Inadvertent Actuation of ECCS and CVCS Malfunction was analyzed
- It took almost 11 minutes, after the high pressurizer level alarm, to fill the pressurizer
- This is deemed to be sufficient for manual remedy

U.S.NRC
UNITED STATES NUCLEAR REGULATORY COMMISSION
Protecting People and the Environment

Inadvertent Opening of a PORV

- RG 1.70 classifies this AOO as a decrease in RCS inventory event
- RCS depressurization reduces thermal margin, which leads to trip
- RCS continues to depressurize and reaches low pressure SI setpoint
- Lower RCS pressure boosts ECCS delivery rate. Pressurizer can fill.

U.S.NRC
UNITED STATES NUCLEAR REGULATORY COMMISSION
Protecting People and the Environment

Inadvertent Opening of a PORV

- Operator can close the PORV very quickly after it opens (< 10 sec)
- With no operator action:
  - ❖SI signal is generated in < 2 min
  - ❖Pressurizer fills in < 7.5 min
  - ❖Charging pumps can cause PORVs to open and relieve water
  - ❖A PORV can stick open (SBLOCA)

Inadvertent Opening of a PORV

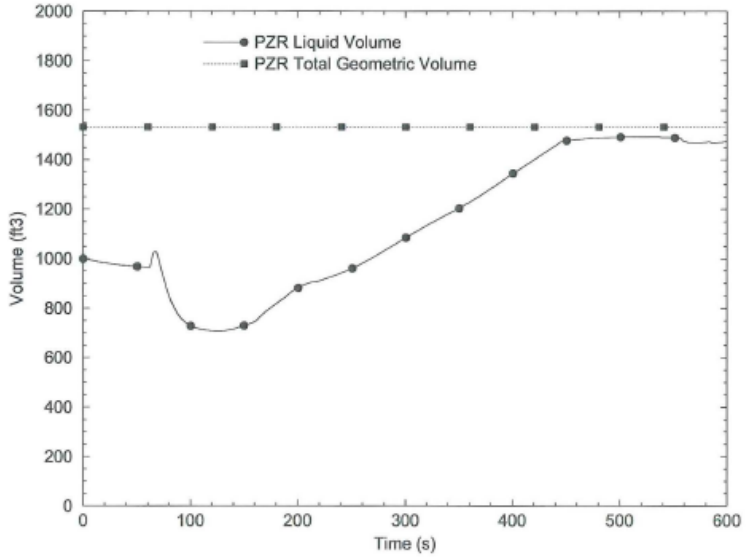

Figure 8 RCS Depressurization / Pressurizer Overfill – Pressurizer Liquid Volume

U.S.NRC
UNITED STATES NUCLEAR REGULATORY COMMISSION
Protecting People and the Environment

Audit (January 2012)

- Feedwater line break,
- Inadvertent opening of a power operated relief valve,
- Chemical and volume control system malfunction,
- Loss of electrical load, and
- Realistic large break loss of coolant accident.

U.S.NRC
UNITED STATES NUCLEAR REGULATORY COMMISSION
Protecting People and the Environment

Review of LOCA

- Realistic Large Break
  - ❖ Licensee implemented EMF-2103, “Realistic Large Break LOCA Methodology for Pressurized Water Reactors.”
  - ❖ Plant-specific analysis includes modeling assumptions that are more reflective of data than the NRC-approved model
- Small Break LOCA
  - ❖ Licensee implemented EMF-2328, “PWR Small Break LOCA Evaluation Model, S-RELAP5 Based.”
  - ❖ Plant-specific analysis includes modeling assumptions that are more reflective of data and plant phenomenology than NRC-approved model

U.S.NRC
UNITED STATES NUCLEAR REGULATORY COMMISSION
Protecting People and the Environment

LOCA Results

- Realistic Large Break

Parameters	Fresh UO2 Fuel	Once Burned UO2 Fuel	10 CFR 50.46 Limits
Peak Clad Temperature	1667 ^{o}F	1639 ^{o}F	2200 ^{o}F
Maximum Local Oxidation	2.5268	3.8793	17.0 %
Maximum Total Core-Wide Oxidation (All Fuel)	0.0209	NA	1.0 %

- Small Break

Parameters	EPU Analysis	10 CFR 50.46 Limits
Peak Clad Temperature	1807 ^{o}F	2200 ^{o}F
Maximum Local Oxidation	3.47 %	17.0 %
Maximum Total Core-Wide Oxidation (All Fuel)	0.04 %	1.0 %

U.S.NRC
UNITED STATES NUCLEAR REGULATORY COMMISSION
Protecting People and the Environment

Large Break LOCA Observations

- PCT occurs during blowdown
- Break size large factor in PCT
- Dispersed film boiling heat transfer coefficient was varied

U.S.NRC
UNITED STATES NUCLEAR REGULATORY COMMISSION
Protecting People and the Environment

Small Break Observations

- Accumulator injection optimization drives limiting result
- SBLOCA analysis in L-2011-206 dated May 27, 2011 will be AOR
- Loop seal clearing treatment provided main difference in PCT between original analysis and the new AOR

U.S.NRC
UNITED STATES NUCLEAR REGULATORY COMMISSION
Protecting People and the Environment

Conclusions

- EM's used were more reflective of data than the NRC-approved model
- Results demonstrate compliance with 50.46 requirements

U.S.NRC
UNITED STATES NUCLEAR REGULATORY COMMISSION
Protecting People and the Environment

Saint Lucie Unit 1 EPU LAR Review:

Fuel Thermal Conductivity Degradation

Mathew Panicker
Division of Safety Systems
Office of Nuclear Reactor Regulation

U.S.NRC
UNITED STATES NUCLEAR REGULATORY COMMISSION
Protecting People and the Environment

Fuel Mechanical Design

- SL1 TCD short-term solution involves application of RODEX2 augmentation factors.
  - Generic approval of RODEX2 augmentation factors, EMF-92-116(P)(A) Supplement 1, expected in 2012.
- FPL license commitment regarding approval of EMF-92-116(P)(A) Suppl. 1.
  - Demonstrate that the St Lucie Unit 1 safety analyses remain conservatively bounded in licensing basis analyses when compared to the NRC-approved generic supplement to the RODEX2 methodology, or
  - Provide a schedule for re-analysis using the NRC-approved generic supplement to the RODEX2 methodology for any of the affected licensing basis analyses.

U.S.NRC
UNITED STATES NUCLEAR REGULATORY COMMISSION
Protecting People and the Environment

Fuel Mechanical Design

- Staff conducted an audit of the AREVA calculations supporting SL1 EPU fuel mechanical design and completed independent FRAPCON-3.4 calculations.
- SL1 TCD long-term solution will be migration to a modern fuel performance code. AREVA is working on a replacement to RODEX2.

U.S.NRC
UNITED STATES NUCLEAR REGULATORY COMMISSION
Protecting People and the Environment

Questions?

U.S.NRC
UNITED STATES NUCLEAR REGULATORY COMMISSION
Protecting People and the Environment

Public Comments

U.S.NRC
UNITED STATES NUCLEAR REGULATORY COMMISSION
Protecting People and the Environment

Committee Guidance Comments

U.S.NRC
UNITED STATES NUCLEAR REGULATORY COMMISSION
Protecting People and the Environment

Adjourn