Posted
Am 5
R-108

Docket No. 50-264 May 8, 1989

Dr. Charles W. Kocher
Reactor Supervisor
1602 Building
Chemical Research Center
Dow Chemical Company
Midland, Michigan 48674

Dear Dr. Kocher:

SUBJECT: ISSUANCE OF AMENDMENT NO. 5 TO FACILITY OPERATING LICENSE NO. R-108 - DOW CHEMICAL COMPANY

The Nuclear Regulatory Commission has issued Amendment No. 5 for Facility Operating License No. R-108 for the TRIGA research reactor at the Dow Chemical Company in response to the application for renewal dated November 14, 1986 as supplemented on June 2, 1987, August 14, 1987, April 29, 1988 and January 10, 1989. This amendment renews the operating license for twenty years from its date of issuance and authorizes a power increase from 100 to 300 kilowatts (thermal).

In accordance with our practice, we have restated the license in its entirety, incorporating all the changes and amendments made since the issuance of the original license.

Enclosed with the amended license is a copy of the Notice of Renewal that is being sent to the Office of the Federal Register for publication, the Environmental Assessment, and the Safety Evaluation Report (NUREG-1312) associated with the renewal.

Sincerely,

M.J. Virgilio for

Gary M. Holahan, Acting Director
Division of Reactor Projects - III, IV, V and Special Projects
Office of Nuclear Reactor Regulation

Enclosures:
1. Amendment No. 5
2. Notice of Renewal
3. Environmental Assessment
4. Safety Evaluation Report (NUREG-1312) - 10
5. Environmental Considerations

cc w/enclosures:
See next page

DISTRIBUTION:	EButcher	GPA/PA	ARM/LFMB
Docket File	AAdams	EJordan	ACRS (10)
NRC & Local PDRs	LRubenstein	BGrimes	RDiggs/LTremper
PDSNP Reading	GHolahan	TBMeek (4)	DHagan
EHylton	OGC-ROCK	OPA	WJones

(LTR TO DR. CHARLES KOCHER)
*See Previous Concurrence

LA:PDSNP*	PM:PDSNP*	D:PDSNP*	OGC-ROCK*	ADR4	(A)DRSP
EHylton	AAdams:cw	CMiller		LRubenstein	GHolahan
03/28/89	03/28/89	03/30/89	04/06/89	04/ /89	04/17/89

UNITED STATES
NUCLEAR REGULATORY COMMISSION
WASHINGTON, D. C. 20555

May 8, 1989

Docket No. 50-264

Dr. Charles W. Kocher
Reactor Supervisor
1602 Building
Chemical Research Center
Dow Chemical Company
Midland, Michigan 48674

Dear Dr. Kocher:

SUBJECT: ISSUANCE OF AMENDMENT NO. 5 TO FACILITY OPERATING LICENSE NO. R-108 - DOW CHEMICAL COMPANY

The Nuclear Regulatory Commission has issued Amendment No. 5 for Facility Operating License No. R-108 for the TRIGA research reactor at the Dow Chemical Company in response to the application for renewal dated November 14, 1986 as supplemented on June 2, 1987, August 14, 1987, April 29, 1988 and January 10, 1989. This amendment renews the operating license for twenty years from its date of issuance and authorizes a power increase from 100 to 300 kilowatts (thermal).

In accordance with our practice, we have restated the license in its entirety, incorporating all the changes and amendments made since the issuance of the original license.

Enclosed with the amended license is a copy of the Notice of Renewal that is being sent to the Office of the Federal Register for publication, the Environmental Assessment, and the Safety Evaluation Report (NUREG-1312) associated with the renewal.

Sincerely,

Gary M. Holahan, Acting Director
Division of Reactor Projects - III, IV, V and Special Projects
Office of Nuclear Reactor Regulation

Enclosures:
1. Amendment No. 5
2. Notice of Renewal
3. Environmental Assessment
4. Safety Evaluation Report (NUREG-1312) - 10
5. Environmental Considerations

cc w/enclosures:
See next page

cc: Office of the Mayor
202 Ashman
Midland, Michigan 48640

Dr. J. M. Macki, Chairman
Reactor Operations Committee
Dow Chemical Company
1602 Building
Midland, Michigan 48640

Office of the Governor
Room 1 - Capitol Building
Lansing, Michigan 48913

I. The receipt, possession and use of the byproduct and special nuclear materials as authorized by this license will be in accordance with the Commission's regulations in 10 CFR Parts 30 and 70, including Sections 30.33, 70.23 and 70.31.

2. Facility Operating License No. R-108 is hereby amended in its entirety to read as follows:

A. The license applies to the TRIGA Mark I nuclear reactor (the facility) owned by the Dow Chemical Company. The facility is located on the licensee's site in Midland, Michigan, and is described in the licensee's application for renewal of the license dated November 14, 1986, as supplemented on June 2, 1987, August 14, 1987, April 29, 1988, and January 10, 1989.

B. Subject to the conditions and requirements incorporated herein, the Commission hereby licenses the Dow Chemical Company:

(1) Pursuant to Section 104c of the Act and 10 CFR Part 50, "Domestic Licensing of Production and Utilization Facilities", to possess, use, and operate the facility at the designated location in Midland, Michigan, in accordance with the procedures and limitations set forth in this license;

(2) Pursuant to the Act and 10 CFR Part 70 "Domestic Licensing of Special Nuclear Material", to receive, possess and use up to 3.4 kilograms of uranium-235 contained in uranium enriched in the isotope uranium-235 in connection with operation of the facility. Without exceeding the foregoing maximum possession limits, the specific categories of maximum limits are as follows:

	Maximum U-235	% Enrichment
(1)	3.4 kg.	less than 20%
(2)	0.01 kg.	up to and including 93%

(3) Pursuant to the Act and 10 CFR Part 30 "Rules of General Applicability to Domestic Licensing of Byproduct Material", to receive, possess and use a 2-curie sealed americium-241 beryllium neutron source in connection with operation of the facility.

(4) Pursuant to the Act and 10 CFR Parts 30 and 70, to possess, but not separate, such byproduct and special nuclear materials as may be produced by the operation of the facility.

UNITED STATES
NUCLEAR REGULATORY COMMISSION
WASHINGTON, D. C. 20555

RENEWAL OF FACILITY OPERATING LICENSE

DOCKET NO. 50-264

DOW CHEMICAL COMPANY

Amendment No. 5
License No. R-108

1. The Nuclear Regulatory Commission (the Commission) has found that:

   A. The application for renewal of Facility Operating License No. R-108 filed by the the Dow Chemical Company (the licensee) dated November 14, 1986, as supplemented on June 2, 1987, August 14, 1987, April 29, 1988, and January 10, 1989, complies with the standards and requirements of the Atomic Energy Act of 1954, as amended (the Act), and the Commission's regulations set forth in 10 CFR Chapter I;

   B. Construction of the facility was completed in substantial conformity with Construction Permit No. CPRR-94 dated December 20, 1966, the provisions of the Act, and the regulations of the Commission;

   C. The facility will operate in conformity with the application, the provisions of the Act, and the regulations of the Commission;

   D. There is reasonable assurance: (i) that the activities authorized by this license can be conducted without endangering the health and safety of the public, and (ii) that such activities will be conducted in compliance with the Commission's regulations;

   E. The licensee is technically and financially qualified to engage in the activities authorized by this operating license in accordance with the regulations of the Commission;

   F. The licensee has satisfied the applicable provisions of 10 CFR Part 140, "Financial Protection Requirements and Indemnity Agreements," of the Commission's regulations;

   G. The Dow Chemical Company is a United States corporation. The issuance of this license will not be inimical to the common defense and security or to the health and safety of the public;

   H. The issuance of this license is in accordance with 10 CFR Part 51 of the Commission's regulations and all applicable requirements have been satisfied; and

C. This license shall be deemed to contain and is subject to the conditions specified in Parts 20, 30, 50, 51, 55, 70 and 73 of 10 CFR Chapter I, to all applicable provisions of the Act, and to the rules, regulations and orders of the Commission now or hereafter in effect and to the additional conditions specified below:

(1) Maximum Power Level

The licensee is authorized to operate the facility at steady state power levels not in excess of 300 kilowatts (thermal).

(2) Technical Specifications

The Technical Specifications contained in Appendix A, as revised through Amendment No. 8 are, hereby, incorporated in the license. The licensee shall operate the facility in accordance with the Technical Specifications.

(3) Physical Security Plan

The licensee shall fully implement and maintain in effect all provisions of the Commission-approved physical security plan, including all amendments and revisions made pursuant to the authority of 10 CFR 50.90 and 10 CFR 50.54(p), which are part of the license. This plan, which contains information withheld from public disclosure under 10 CFR 2.790, is entitled "Dow TRIGA Research Reactor Security Plan" dated June 1987.

D. This license is effective as of the date of issuance and shall expire twenty years from its date of issuance.

FOR THE NUCLEAR REGULATORY COMMISSION

Gary M. Holahan, Acting Director
Division of Reactor Projects - III, IV,
V and Special Projects
Office of Nuclear Reactor Regulation

Enclosure:
Appendix A Technical
Specifications

DATE OF ISSUANCE: May 8, 1989

7590-01

UNITED STATES NUCLEAR REGULATORY COMMISSION

NOTICE OF RENEWAL OF FACILITY OPERATING LICENSE NO. R-108

DOW CHEMICAL COMPANY

DOCKET NO. 50-264

The U. S. Nuclear Regulatory Commission (the Commission) has issued Amendment No. 5 to Facility Operating License No. R-108 for the Dow Chemical Company (the licensee), which renews the license at an increased power level for operation of the TRIGA Mark I research reactor located on the licensee's site in Midland, Michigan.

The facility is a non-power reactor that has been operating at a power level not in excess of 100 kilowatts (thermal). The renewed Facility Operating License No. R-108 authorizes an increased power not in excess of 300 kilowatts (thermal) and will expire twenty years from its date of issuance.

The amended license complies with the standards and requirements of the Atomic Energy Act of 1954, as amended (the Act), and the Commission's regulations. The Commission has made appropriate findings as required by the Act and the Commission's regulations in 10 CFR Chapter I. Those findings are set forth in the license amendment. Opportunity for hearing was afforded in the notice of the proposed issuance of this renewal in the FEDERAL REGISTER on December 15, 1986 at 51 FR 44956. No request for a hearing or petition for leave to intervene was filed following notice of the proposed action.

Continued operation of the reactor at the increased power level will not require alteration of buildings or structures, will not lead to significant changes in effluents released from the facility to the environment, will not increase the probability or consequences of accidents, and will not involve any unresolved issues concerning alternative uses of available resources. Based on the foregoing and on the Environmental Assessment, the Commission concludes that renewal of the license will not result in any significant environmental impacts.

The Commission has prepared a Safety Evaluation Report (NUREG-1312) for the renewal of Facility Operating License No. R-108 and has, based on that report, concluded that the facility can continue to be operated by the licensee without endangering the health and safety of the public.

The Commission also prepared an Environmental Assessment which was published in the FEDERAL REGISTER on May 1, 1989 (54 FR 18614) for the renewal of Facility Operating License No. R-108 and has concluded that this action will not have a significant effect on the quality of the human environment.

For further details with respect to this action, see: (1) the application for amendment dated November 14, 1986, as supplemented on June 2, 1987, August 14, 1987, April 29, 1988, and January 10, 1989; (2) Amendment No. 5 to Facility Operating License No. R-108; (3) the related Safety Evaluation Report (NUREG-1312) and (4) the Environmental Assessment dated April 20, 1989. These items are available for public inspection at the Commission's Public Document Room, 2120 L Street, N.W., Washington, D.C. 20555.

Copies of NUREG-1312 may be purchased by calling (202) 275-2060 or (202) 275-2171 or write the Superintendent of Documents, U.S. Government Printing Office, Post Office Box 37082, Washington, D.C. 20013-7982.

Dated at Rockville, Maryland, this 8th day of May 1989.

FOR THE NUCLEAR REGULATORY COMMISSION

Charles L. Miller

Charles L. Miller, Director
Standardization and Non-Power
Reactor Project Directorate
Division of Reactor Projects - III, IV,
V and Special Projects
Office of Nuclear Reactor Regulation

NUREG--1312

TI89 011640

Safety Evaluation Report

related to the renewal of the facility license for the research reactor at the Dow Chemical Company

U.S. Nuclear Regulatory Commission

Office of Nuclear Reactor Regulation

April 1989

DISCLAIMER

ABSTRACT

This Safety Evaluation Report for the application filed by the Dow Chemical Company for renewal of Facility Operating License R-108 to continue to operate its research reactor at an increased operating power level has been prepared by the Office of Nuclear Reactor Regulation of the U.S. Nuclear Regulatory Commission. The facility is located on the grounds of the Michigan Division of the Dow Chemical Company in Midland, Michigan. The staff concludes that the Dow Chemical Company can continue to operate its reactor without endangering the health and safety of the public.

TABLE OF CONTENTS

TABLE OF CONTENTS (Continued)

TABLE OF CONTENTS (Continued)

TABLE OF CONTENTS (Continued)

TABLE OF CONTENTS (Continued)

FIGURES

TABLES

1 INTRODUCTION

By letter (with supporting documentation) dated November 14, 1986, as supplemented on June 2, 1987, August 14, 1987, April 29, 1988, and January 10, 1989, the Dow Chemical Company (Dow/licensee) submitted to the U.S. Nuclear Regulatory Commission (NRC/staff) a timely application for a 20-year renewal of the Class 104c Facility Operating License R-108 (NRC Docket No. 50-264) and an increase in operating power level, from the existing 100 kilowatts thermal [kW(t)] to 300 kW(t), for its TRIGA Mark I research reactor facility. The research reactor facility is located in the 1602 Building on the grounds of the Michigan Division of the Dow Chemical Company in Midland, Michigan. The licensee currently is permitted to operate the Dow TRIGA Research Reator (DTRR) within the conditions authorized in past amendments in accordance with Title 10 of the Code of Federal Regulations (10 CFR), Section 2.109, until NRC action on the renewal request is completed.

The staff's review, with respect to issuing a renewal operating license to Dow, was based on the information contained in the renewal application and supporting supplements plus responses to requests for additional information. The renewal application included financial statements, the Safety Analysis Report, an Environmental Report, the Operator Requalification Program, the Emergency Plan, and Technical Specifications. This material is available for review at the Commission's Public Document Room located at 2120 L Street, NW, Washington, DC 20555. The approved Physical Security Plan is protected from public disclosure under 10 CFR 2.790.

The purpose of this Safety Evaluation Report (SER) is to summarize the results of the safety review of the DTRR and to delineate the scope of the technical details considered in evaluating the radiological safety aspects of continued operation. This SER will serve as the basis for renewal of the license for operation of the DTRR at thermal power levels up to and including 300 kW. The facility was reviewed against the requirements of 10 CFR Parts 20, 30, 50, 51, 55, 70, and 73; applicable regulatory guides; and appropriate accepted industry standards [American National Standards Institute/American Nuclear Society (ANSI/ANS) 15 series]. Because there are no specific accident-related regulations for research reactors, the staff has compared calculated dose values with related standards in 10 CFR Part 20, the standards for protection against radiation, both for employees and the public.

This SER was prepared by Alexander Adams, Jr., Project Manager, Division of Reactor Projects III, IV, V, and Special Projects, Office of Nuclear Reactor Regulation, U.S. Nuclear Regulatory Commission. Major contributors to the technical review were the Project Manager and R. E. Carter, C. Cooper, and R. Carpenter of the Idaho National Engineering Laboratory under contract to the NRC.

1.1 Summary and Conclusions of Principal Safety Considerations

In its evaluation, the staff considered the information submitted by the licensee, inspection reports by NRC Region III personnel, and onsite observations. In addition, as part of its licensing review of several TRIGA reactors,

the staff examined laboratory studies and analyses of several accidents postulated for the TRIGA reactor. The staff's conclusions, based on evaluation and resolution of the principal issues reviewed for the DTRR, are as follows:

(1) The design, testing, and performance of the reactor structure and the systems and components important to safety during normal operation were adequately planned, and safe operation can reasonably be expected to continue.

(2) There has been no significant degradation of equipment, and the licensee's management organization will continue to maintain and operate the reactor so that there is no significant increase in the radiological risk to the employees or the public.

(3) The expected consequences of several postulated credible accidents have been considered, emphasizing those likely to cause loss of integrity of fuel-element cladding. The staff performed conservative analyses of the most serious, hypothetically credible accidents and determined that the calculated potential radiation doses outside the reactor site are not likely to exceed the guidelines of 10 CFR Part 20 for doses in unrestricted areas.

(4) The licensee's management organization, conduct of training and research activities, and security measures are adequate to ensure safe operation of the facility and protection of its special nuclear material.

(5) Releases of radioactive wastes from the facility are within the limits of the Commission's regulations and are as low as is reasonably achievable (ALARA).

(6) The licensee's Technical Specifications, which provide limits controlling operation of the facility, are such that there is a high degree of assurance that the facility will be operated safely and reliably.

(7) The financial data provided by the licensee are such that the staff has determined that the licensee has reasonable access to sufficient revenues to cover operating costs and eventually to decommission the reactor facility.

(8) The licensee's program for providing for the physical protection of the facility and its special nuclear material complies with the requirements of 10 CFR Part 73.

(9) The licensee's procedures for training its reactor operators and the plan for operator requalification are adequate; they give reasonable assurance that the DTRR will be operated competently.

(10) The licensee's approved Emergency Plan provides reasonable assurance that the licensee is prepared to assess and respond to potential emergency events.

1.2 History

Dow began installation of the General Atomic, Incorporated, TRIGA Mark I reactor in 1966. On July 3, 1967, the Atomic Energy Commission issued Operating License R-108 for the DTRR at power levels up to 100 kW(t). Criticality was first reached on July 6, 1967.

1.3 Reactor Description

The DTRR is a heterogeneous, pool-type reactor. The core is cooled by natural convection of light water, moderated by zirconium hydride and light water, and reflected by graphite and light water. It is located in a 5,000-gallon (~19,000-L), partially below-ground pool, which is, in turn, cooled and purified by external cooling and purification systems. Reactor experimental facilities include a rotary specimen rack, a pneumatic transfer tube, dummy fuel elements, and a core central thimble. Experiments can also be irradiated in the water volume that surrounds the core.

The reactor core consists of a mixture of aluminum-clad and stainless-steel-clad uranium zirconium hydride ($U\text{-}ZrH_x$) fuel elements containing 8 weight percent uranium. The uranium used is enriched to less than 20 percent in the uranium-235 isotope. The cylindrical elements [with a diameter of 1.47 in. (3.73 cm) and a length of 14 in. (35.5 cm) for aluminum-clad elements and a diameter of 1.47 in. (3.73 cm) and a length of 15 in. (38.1 cm) for stainless-steel-clad elements] are arranged in a right cylinder. Reactivity of the reactor core is changed by the operator by moving three control rods, which contain a mixture of boron carbide and aluminum oxide.

1.4 Shared Facilities and Equipment

The reactor area consists of the reactor room (which contains the reactor and associated experimental equipment), the reactor water treatment room, the reactor control room, a hot laboratory, and a sample preparation and counting room (see Figure 4.2). The hot laboratory is the laboratory terminus for the reactor pneumatic transfer tube and can also receive samples directly from the reactor room through a pass-through opening in a reactor room wall that leads into a hot laboratory fume hood. The reactor room and reactor water treatment room are additions to the 1602 Building. Electricity and water for the reactor area are provided from the 1602 Building. The reactor area has its own dedicated heating and cooling system, which supplies heated, cooled, filtered, and humidity-controlled air to the reactor area.

1.5 Comparison With Similar Facilities

The reactor fuel rods are similar to those in most of the 55 TRIGA-type reactors in operation throughout the world, 27 of which are in the United States. Of the 27 U.S. reactors, 25 are licensed by the NRC. The instruments and controls are typical of TRIGA reactors and similar in principle to most of the non-power reactors licensed by the NRC.

1.6 Nuclear Waste Policy Act of 1982

Section 302(b)(1)(B) of the Nuclear Waste Policy Act of 1982 provides that the NRC may require, as a precondition to issuing or renewing an operating license for a research or test reactor, that the applicant shall have entered into an agreement with the U.S. Department of Energy (DOE) for the disposal of high-level radioactive wastes and spent nuclear fuel. Dow has entered into a contract with DOE (Contract #DE-CR01-83-NE-44483) for the ultimate disposal of the fuel in the DTRR. Because Dow has entered into such a contract with DOE, the applicable requirements of the Waste Policy Act of 1982 have been satisfied for the DTRR.

2 SITE CHARACTERISTICS

2.1 Reactor Site

The DTRR is located in the city of Midland, Midland County, Michigan (see Figure 2.1). It is located within the security fence that surrounds the research facilities and manufacturing plant of the Dow Chemical U.S.A, Michigan Division (see Figure 2.2). The area immediately outside the fence is largely owned by Dow. East of the Michigan Division is an open, unpopulated, industrial-type area. To the west are industrial businesses and a few residences. The residential section of Midland is located to the north. To the south is the Midland Cogeneration Venture, a project to complete the former Consumers Power Midland Nuclear Power Plant by converting it to natural gas fuel.

Midland County is an area of flat or gently rolling farmland with a nominal elevation of 642 ft (196 m) above sea level. The Chippewa River joins with the Tittabawassee River in the city of Midland. The Tittabawassee River flows through the Michigan Division site.

2.2 Demography

The city of Midland has a population of approximately 37,000. The Michigan Division of Dow has a peak workforce on site of about 5000 people. The nearest Dow building is approximately 200 ft (61 m) away from the reactor facility. The closest residence is about 1600 ft (488 m) away from the facility. Bay City, with a population of about 80,000, is 20 mi (32 km) to the east of Midland on Lake Huron. The metropolitan area of Saginaw, with a population of about 100,000, is 25 mi (40 km) southeast of Midland.

2.3 Nearby Industrial, Transportation, and Military Facilities

The nearest industrial complex is the manufacturing area of the Dow Michigan Division located approximately 1200 ft (365 m) to the southwest of the 1602 Building. The possibility exists that a chemical release may occur that would require the evacuation of the 1602 Building. In the DTRR Emergency Plan this event is considered an unclassified emergency. Unclassified emergencies are covered by the independent 1602 Building Emergency Plan, which is referenced by the DTRR Emergency Plan.

There are no military installations, and the nearest airport is approximately 4 mi (6.4 km) from the reactor site. The nearest railroad line is 1700 ft (520 m) southwest of the site, and the nearest highway, US-10, is 1 mi (1.6 km) to the east.

In view of the safe operating history of the past 21 years, the DTRR Emergency Plan, the 1602 Building Emergency Plan, and the location of nearby transportation facilities, the staff concludes that these facilities pose no significant risk to the safe operation of the DTRR.

2.4 Meteorology

The climate of the city of Midland can be described as temperate continental with warm summers and cold snowy winters. Weather information is available from the National Weather Service station located at the Tri-City airport, 10 mi (16 km) southeast of the reactor site. The average annual precipitation for Midland is 30 in. (76 cm), and the average snow fall is 32 in. (81 cm). The wettest month is September with 3.2 in. (8 cm) of precipitation, and the driest month is February with 1.8 in. (4.5 cm) of precipitation. Thunderstorms occur an average of 33 days a year with most of these storms occurring from May through August.

The average annual temperature is 49°F (9.4°C). The average maximum monthly temperatures range from 73°F (22.8°C) in July to 23°F (-5.0°C) in February. The maximum daily temperature exceeds 90°F (32.2°C) an average of 9 days per year.

The prevailing winds are from the southwest at 4 to 12 mi/hr (6 to 19 km/hr). The history of tornadoes at the site indicates a very low probability of occurrence. During 1985, one tornado warning occurred at the site.

The staff concludes that there are no unique meteorological conditions that could produce or cause a significant risk to the safe operation of the DTRR.

2.5 Geology and Seismology

The Dow site is situated near the center of the Michigan Basin, a major regional structural basin that is part of the Central Stable Region tectonic province. The basin, which encompasses Michigan's lower peninsula, as well as parts of the upper peninsula and Canada, eastern Wisconsin, and northern portions of Illinois, Indiana, and Ohio, has an area of approximately 122,000 mi^2 (316,000 km^2).

The Michigan Basin has a long history as a stable structural basin. The last significant tectonic activity in the region appears to have occurred in early Pennsylvanian time approximately 300 million years ago. The basin is bounded on the north by the Canadian Shield, on the east and southeast by the Findlay Arch and Algonquin Axis, on the west and southwest by the Wisconsin and Kankakee Arches, and on the northwest by the Wisconsin Dome.

The site area is dominated by surface features of predominantly glacial origin. Glacial drift covers the area to depths ranging from a few feet to several hundred feet. Topographic relief is low to moderate, typical of a glaciated plain.

Different areas of the Central Stable Region tectonic province exhibit different levels of seismic activity. The Midland area displays a relatively low level of seismic activity compared with other areas of the tectonic province. In "Seismicity Map of the State of Michigan" (Stover, Reagor, and Algermissen, 1980), the U.S. Geological Survey lists approximately 85 historically reported earthquakes in Michigan. The closest of these to the site occurred on February 22, 1918. It had a maximum modified Mercalli intensity of IV and was located over 50 mi (80 km) from the city of Midland.

2.6 Hydrology

The 1602 Building is located about 4000 ft (1200 m) from the left bank (looking downstream) of the Tittabawassee River. Surface drainage for the area is provided by the Tittabawassee River, which is a source of cooling water for the Dow Chemical Company. The length of the Tittabawassee River from headwater to mouth is about 85 mi (136 km) and its fall is 700 ft (213 m). Principal tributaries upstream from Midland are the Molasses River from the east and the Tobacco, Salt, Chippewa, and Pine Rivers from the west. The fan-shaped drainage area above Midland encompasses about 2400 mi^2 (6200 km^2). The topography does not have pronounced relief and is characterized by many lakes and swampy areas. Less than half the drainage area is forested. There are numerous dams and reservoirs in the Tittabawassee Basin above Midland, but most are either of low head or very small storage capacity.

The drinking water for the city of Midland is supplied by a pipeline from Lake Huron. The Tittabawassee River empties into Saginaw Bay via the Saginaw River, about 40 mi (64 km) downstream of Midland, near which point Bay City extracts drinking water. Water used to cool the reactor is discharged to the Midland sewage system.

Ground surface in the area of the 1602 Building is about 630 ft (190 m) above mean sea level (msl). Normal flows in the Tittabawassee River would be about 600 ft (180 m) msl or less. Flooding occurred in Midland in September 1986, following extremely heavy rains. The Tittabawassee River crested at about elevation 614 ft (187 m) msl [about 70,000 ft^3/s (1,900 m^3/s)], which is almost 5 ft (1.5 m) higher than the previously recorded flood. Large areas of the city were flooded and subjected to backup of sewage. None of this affected the operation of the reactor, which is situated in an area well above the flood area.

The discharge capacity of the Tittabawassee River below elevation 630 ft (190 m) msl in the vicinity of the TRIGA site is about 250,000 ft^3/s (7,000 m^3/s). This is almost equivalent to the probable maximum flood (PMF) discharge for the river basin above Midland. Floods resulting from dam failure were investigated for the Midland Nuclear Power Plant; these investigations indicated that the domino failure of four upstream dams coincident with the PMF would produce a discharge of about 260,000 ft^3/s (7,300 m^3/s) at the TRIGA site. The degree of flood protection is acceptable for this type of reactor.

A shallow, unconfined aquifer is located in the surficial glacial deposits at the site. This aquifer is not generally used for potable water supplies. However, if radionuclides should leak from the reactor well into the unconfined aquifer, they would migrate to the Tittabawassee River.

There is sufficient dilution and retardation of radionuclides within 500 to 1000 ft (150 to 300 m) of the reactor so that the concentration would likely be reduced to small fractions of 10 CFR Part 20 requirements. This is in fact the case for all larger commercial nuclear power plants located in similar material. Thus, contamination of groundwater should not be a problem.

2.7 Conclusion

On the basis of the above considerations for both natural and man-made hazards, the staff concludes that there is no significant risk associated with the site that would make it unacceptable for the continued operation of the reactor.

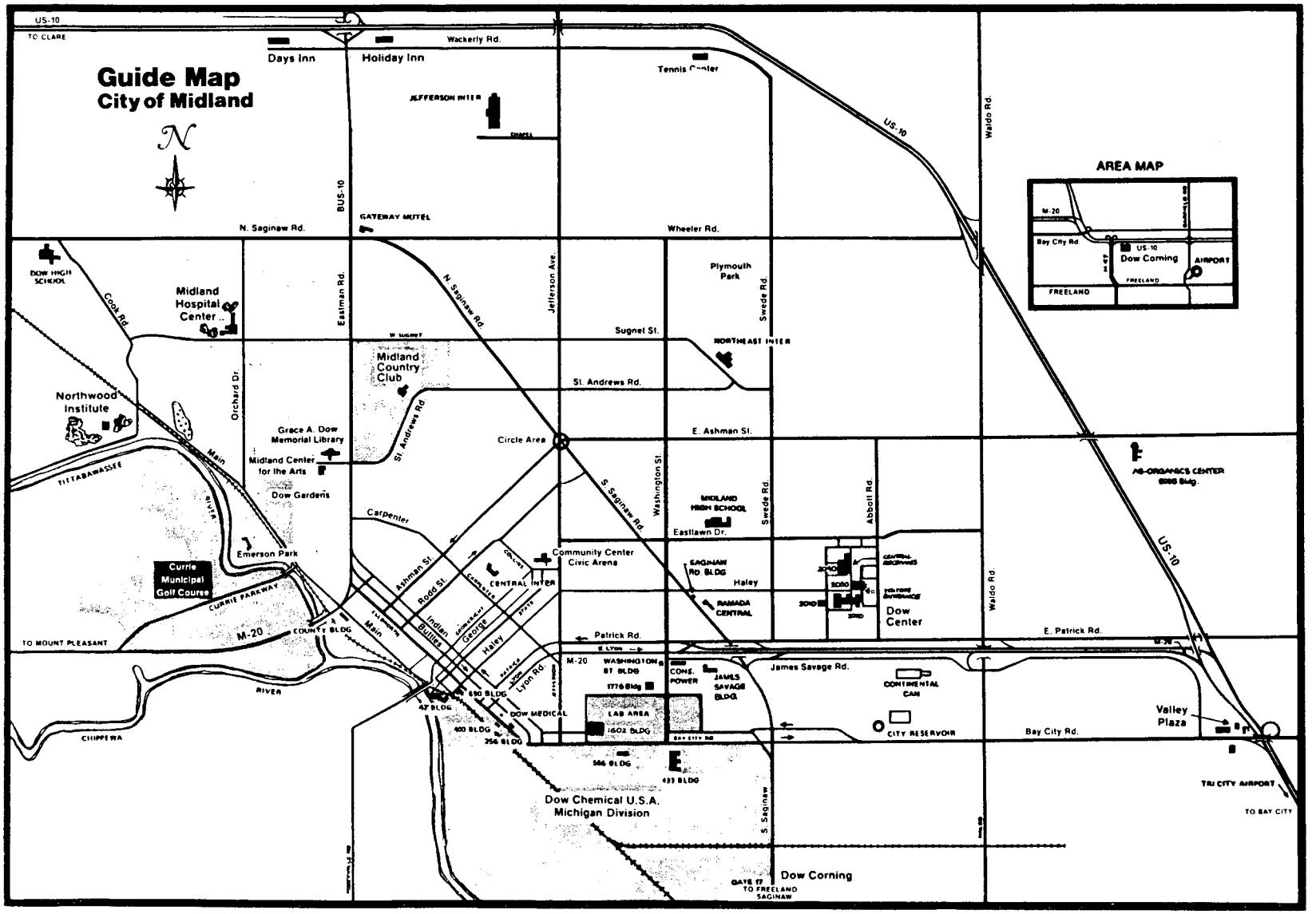

Figure 2.1 City of Midland, Midland County
Source: Dow Chemical Company

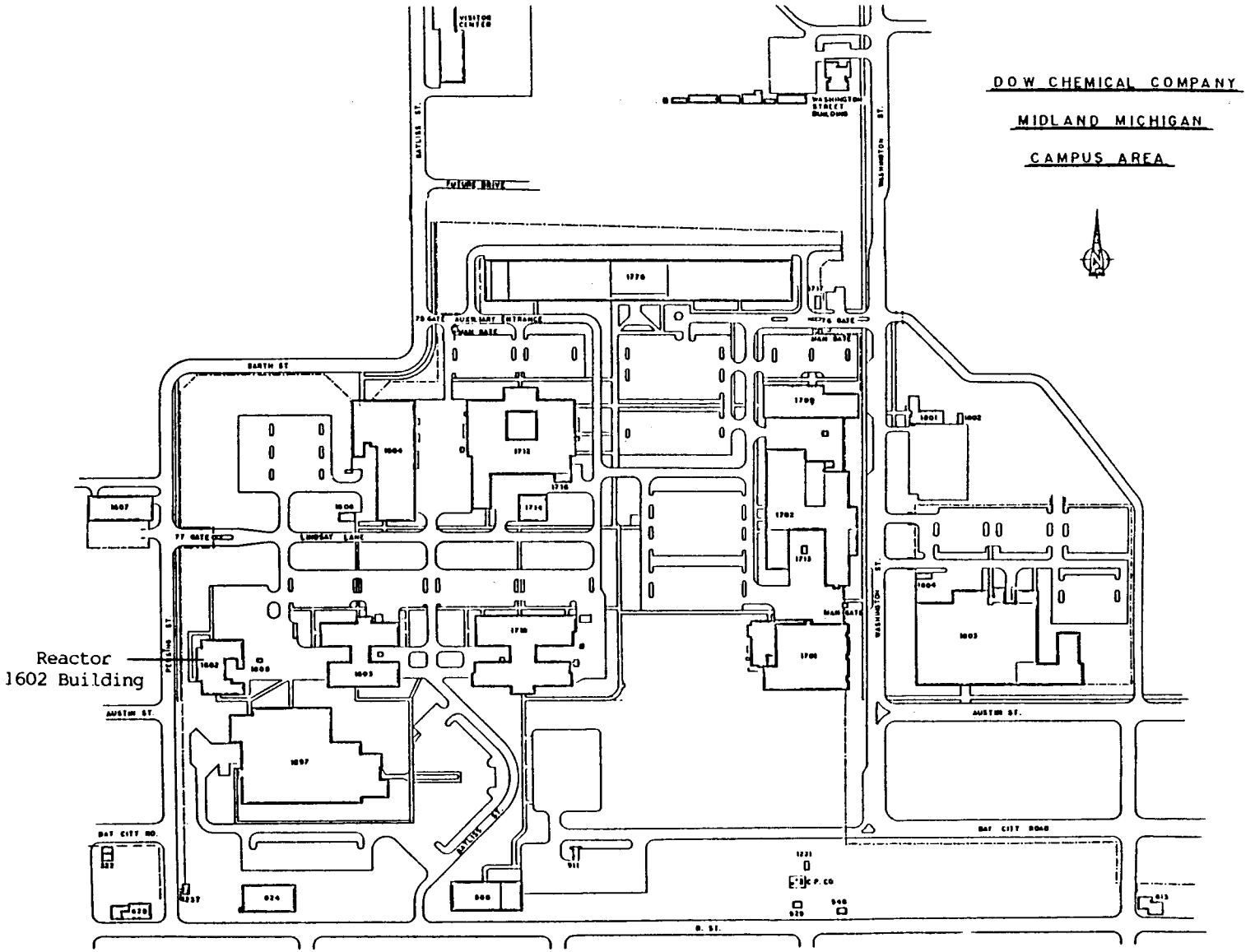

Figure 2.2 Map showing the 1602 Building and campus research area
Source: Dow Chemical Company

3 DESIGN OF STRUCTURES, SYSTEMS, AND COMPONENTS

3.1 Reactor Facility Description

The 1602 Building is a modern laboratory of fireproof construction with a steel frame, concrete panels, and concrete block walls. The reactor room is an addition to the 1602 Building constructed of a steel frame and non-load-bearing walls of concrete blocks. The roof is of poured gypsum with a 6-ft by 6-ft (1.8-m by 1.8-m) skylight equipped with a one-piece plastic dome centered over the reactor pool. In 1988 a new room was constructed off the reactor room to house the reactor water treatment system, which was relocated from the 1602 Building basement.

The reactor is contained in a tank that is installed in a well that is below ground level. This is typical of Mark I TRIGA reactors. Further details on the reactor tank can be found in Section 4.2.

3.2 Wind and Water Damage

The Midland area experiences few extreme wind conditions such as tornadoes. Furthermore, as described above, the reactor room is constructed of concrete blocks with a steel frame. The reactor itself is below ground level. Although record flooding occurred in Midland in 1986, reactor operations were not affected. The 1602 Building is situated well above the flood plain of the Tittabawassee River; therefore, wind or water damage to the DTRR facility is very unlikely.

3.3 Seismically Induced Reactor Damage

The information on past seismic activity and the likelihood of future earthquakes in the Midland area indicates that the DTRR is in a region where there is a low probability of severe seismic activity. The reactor core is contained in a tank system consisting of coaxial tanks resting on a large concrete pad, all surrounded by compacted soil. This structure is designed to shift, as necessary, to relieve stresses without rupture, if an earthquake were to occur.

In addition, as discussed in Section 14, even catastrophic damage that would cause total loss of coolant would not lead to core damage, and mechanical damage to fuel cladding would release only a small fraction of the fission product inventory.

3.4 Mechanical Systems and Components

The mechanical systems important to safety are the neutron-absorbing control rods suspended from the superstructure. The motors, gear boxes, switches, and wiring are all above the level of the tank water and readily accessible for visual inspection, testing, and maintenance. The staff has addressed the effects of aging on the continued performance of these components in Section 17 of this SER.

3.5 Conclusion

On the basis of the above considerations, the staff concludes that the DTRR was designed and built to adequately withstand all credible and likely wind, water, and seismic damage associated with the site. The design and performance of the safety systems have been verified by 21 years of operation. Accordingly, the staff concludes that the reactor systems and components are adequate to provide reasonable assurance that continued operation will not cause significant radiological risk to the health and safety of the public.

4 REACTOR

The DTRR is a General Atomics TRIGA Mark I reactor, currently licensed to operate at a maximum power level of 100 kW(t) with a maximum excess reactivity of 2.00$ (1.4% $\Delta k/k$). A cutaway view of the reactor is shown in Figure 4.1. With its license renewal application, however, Dow has requested and submitted documentation supporting an increase in the maximum licensed power level to 300 kW(t) and an increase in the maximum licensed excess reactivity to 3.00$ (2.1% $\Delta k/k$).

Solid uranium-zirconium-hydride fuel containing 8 weight percent uranium enriched to less than 20 percent uranium-235 is used in the DTRR. Except for one aluminum-clad fuel element, the DTRR core consists of stainless-steel-clad fuel elements. The reactor core is immersed in an open tank of light water that serves as the neutron moderator, coolant, and partial shield. Reactor power is regulated by inserting or withdrawing neutron-absorbing control rods. Many TRIGA reactors are designed and instrumented to operate in the pulse mode; however, the DTRR has no pulsing capabilities.

The DTRR is used in the Analytical Laboratories of the Michigan Division of the Dow Chemical Company as part of a research program involving neutron activation analysis, isotope production, neutron radiography, and irradiation studies. At a power level of 100 kW(t), the DTRR is operated at an average of 1.5 megawatt-days/yr. The principal design parameters for the DTRR are listed in Table 4.1.

The layout of the DTRR facility in the 1602 Building of the Dow Analytical Laboratories is shown in Figure 4.2. The location of the 1602 Building and the reactor in relation to the closest public unrestricted area is shown in Figure 4.3.

4.1 Reactor Core

The core, which is a right circular cylinder, consists of a lattice of cylindrical fuel-moderator elements, graphite dummy elements, control rods, a neutron source, and sample irradiation facilities, all of which are immersed in a pool of water. A cutaway view of the core region is shown in Figure 4.4.

The reactor core assembly forms a 14-in. (36-cm)-diameter by 15-in. (38-cm)-deep right cylinder and can contain up to 85 fuel elements. The fuel elements and three control rods are positioned by the upper and lower aluminum grid plates. Water occupies about one-third of the core volume. Calculations show that the resultant fuel-to-moderator ratio provides, very nearly, the minimum critical mass.

4.1.1 Fuel Elements

In the DTRR cylindrical aluminum-clad and stainless-steel-clad fuel-moderator elements are used in which the fuel is a solid homogeneous mixture of uranium-zirconium-hydride alloy containing uranium enriched to slightly less than 20 percent uranium-235 (U-235). The nominal weight of the U-235 in each of the

standard fuel elements is 35 g. When initially configured for 300-kW operation, 1 aluminum-clad fuel element and up to 77 stainless-steel-clad fuel elements are loaded in the DTRR core. The core position of the aluminum-clad fuel element and the core positions of the stainless-steel-clad fuel elements are shown in Figure 4.5. The nominal hydrogen-to-zirconium ratio of the moderator material incorporated into the fuel is 1:1 for the aluminum-clad elements and 1.6:1 for the stainless-steel-clad elements. The fuel section of the cylindrical element is 14 in. (35.6 cm) long with a diameter of 1.41 in. (3.58 cm) (aluminum-clad) or 15 in. (38.1 cm) long with a diameter of 1.43 in. (3.63 cm) (stainless-steel-clad). Graphite end plugs - 4.0 in. (10.2 cm) long (aluminum-clad) or 3.45 in. (8.8 cm) long (stainless-steel-clad) - at both ends of the fuel element serve as axial neutron reflectors. The fueled and graphite sections of the fuel elements are contained in 0.02-in. (0.05-cm)-thick stainless-steel-walled tubes or 0.03-in. (0.076-cm)-thick aluminum-walled tubes. Appropriate end fittings are welded to the ends of the cladding. A schematic view of a typical TRIGA stainless-steel-clad fuel element is shown in Figure 4.6.

4.1.2 Core Support Structure and Reflector

The fuel elements, graphite elements, control rods, and neutron source are accurately positioned into a lattice by means of two aluminum grid plates. The bottom plate is 0.75 in. (1.9 cm) thick with holes to receive the end fixtures of the elements that rest on the lower grid plate and are positioned by the pin on the lower end of the element. The top grid plate is also 0.75 in. (1.9 cm) thick and has holes that are 1.5 in. (3.8 cm) in diameter. The top plate does not support the weight of the elements but serves to position the elements and permit their withdrawal from the core. Because the core is cooled by natural convection of water that flows upward through the core, the lower grid plate has 36 holes for water passage. The water can pass through the top grid plate by means of the gap between the triangular section of the fuel element and the round grid hole.

The core lattice is surrounded by a ring of graphite 12 in. (30.5 cm) thick and 22 in. (56 cm) high with an inside diameter of 18 in (45.7 cm). This graphite reflector assembly is encased in a welded aluminum can to prevent the penetration of water. Top and bottom axial reflection is provided by graphite plugs incorporated into both ends of the individual fuel elements.

The reflector assembly rests on the reflector platform and provides the support for the two grid plates.

4.1.3 Control Rods

Three control rods are used to control and regulate the power levels in the DTRR: a shim rod, a regulating rod, and a safety rod. Each of the three rods operates within a perforated aluminum guide tube. The 19-in. (48-cm)-long neutron absorber section contained in the control rods is a mixture of boron carbide and aluminum oxide in a sealed aluminum tube. Each control rod is 20 in. (51 cm) long and has a vertical travel of 15 in. (38 cm). The regulating rod has a 0.88-in. (2.24-cm) outside diameter, and the shim and safety rods have 1.25-in. (3.18-cm) outside diameters. The maximum rate of withdrawal of the shim and safety rods corresponds to about 0.10$/s (0.07% $\Delta k/k/s$) and that of

the regulating rod corresponds to about 0.04$/s (0.03% $\Delta k/k/s$). The neutron-absorbing sections of the control rods are supported by electromagnets. If a power failure or scram occurs, the control rod magnets are de-energized and the rods fall into the core by gravity.

4.1.4 Neutron Source

In the DTRR a 2-Ci americium-beryllium (Am-Be) neutron source is used for reactor startup. The neutron source holder is fabricated of anodized aluminum and is of the same general size and dimensions as a fuel element and can thus be placed in any vacant location in the core. The source is located at the center line of the source holder element and the midplane of the core. During high-power operation, the source may be removed from the high-flux region of the core.

4.2 Reactor Tank and Biological Shield

The reactor is installed near the bottom of a cylindrical tank 21.5 ft (6.6 m) deep and 6.5 ft (2.0 m) in diameter. The tank is fabricated of aluminum 0.25 in. (0.64 cm) thick, which is wrapped on the outside with three layers of felt cloth and pitch to retard corrosion of the aluminum. This tank is contained in a poured concrete shell 3 ft (0.91 m) thick that itself is contained in a corrugated steel shell 24 ft (7.32 m) deep. This steel shell is placed on a concrete pad 3.5 ft (1.07 m) thick. The aluminum reactor tank is filled with deionized water to a minimum level of 15 ft (4.5 m) above the top of the core. This water serves as a biological shield, a moderator, and a coolant. There are no penetrations of the reactor tank; coolant pipes enter the tank from the top.

4.3 Reactor Instrumentation

The reactor instrumentation includes three neutron-detection channels; water radioactivity, temperature, and conductivity monitors; an area radiation monitor; and a control console. The neutron channels use one fission chamber and two ion chambers, mounted on the perimeter of the reflector, which provide power indication from 10^{-3} W to 300 kW. A detailed description of the reactor instrumentation is provided in Section 7.

4.4 Dynamic Design Evaluation

The DTRR is operated by manipulating control rods in response to changes in parameters such as temperature and neutron flux (power) as measured by the instrument channels. Interlocks prevent excessive reactivity additions, and a scram system initiates a rapid shutdown (reactor scram) if a preset power limit has been reached. In addition, the unique characteristics of the U-ZrH_x fuel-moderator material provide a large, prompt, negative temperature coefficient that reduces the reactivity of the reactor if there is a significant increase in fuel temperature. This provides additional operating stability and safety during any transient. The negative temperature coefficient results principally from the neutron spectrum hardening properties of ZrH_x at elevated temperatures, which increase the leakage of neutrons from the fuel-bearing material into the water moderator material, where they are absorbed preferentially. This reactivity decrease is a prompt effect because the fuel and ZrH_x are mixed

homogeneously; thus, the ZrH_x temperature rises essentially simultaneously with fuel temperature (reactor power). An additional contribution to the prompt, negative temperature coefficient is the Doppler broadening of U-238 resonances at high temperatures, which increases nonproductive neutron capture in these resonances (Simnad, 1980; Simnad et al., 1976).

4.4.1 Excess Reactivity and Shutdown Margin

The Technical Specifications require that the control rods provide a shutdown margin greater than 0.50$ (0.35% Δk/k) with the highest worth control rod fully withdrawn, the other control rods fully inserted, the xenon worth negligible [<0.30$ (0.21% Δk/k)], and the reactor core at ambient temperature (cold).

The Technical Specifications limit the core excess reactivity to less than 3.00$ (2.1% Δk/k) above cold, xenon negligible [<0.30$ (0.21% Δk/k)] conditions, as measured at zero power (<10 W). This 3.00$ (2.1% Δk/k) restriction applies with or without experiments in place. The Technical Specifications also limit experiment reactivity worth to a maximum of 1.00$ (0.7% Δk/k) for all experiments combined and a maximum of 0.75$ (0.53% Δk/k) for any single unsecured experiment.

The control rod worths for a typical core configuration are 3.00$ (2.10% Δk/k) for the safety rod, 3.00$ (2.10% Δk/k) for the shim rod, and 1.00$ (0.70% Δk/k) for the regulating rod. Assuming the DTRR is configured with 3.00$ (2.10% Δk/k) excess, the shutdown margin is 1.00$ (0.70% Δk/k). Therefore, the 300-kW core configuration meets both the shutdown and the excess reactivity requirements. With all rods fully inserted, the core is subcritical by 4.00$ (2.80% Δk/k).

4.4.2 Normal Operating Conditions

In its license renewal application, the licensee has requested an increase in the authorized maximum steady-state power from 100 to 300 kW and in the authorized maximum excess reactivity from 2.00$ to 3.00$ (1.4 to 2.1% Δk/k). To ensure safe reactor operations under these conditions, the Technical Specifications impose a limiting safety system setting (LSSS) of 300 kW (as measured by either of the two linear power level channels) to prevent the maximum fuel temperature from reaching the safety limit of 500°C. The location in the core of the aluminum-clad fuel element is restricted by the Technical Specifications to the E or F ring, where the lowest fuel temperature exists under all postulated normal operating and accident conditions. (See also Section 14.)

Calculations performed by General Atomic and confirmed by experiments indicate that no cladding damage occurs at peak fuel temperatures as high as approximately 530°C for low-hydride-type ($U\text{-}ZrH_{1.0}$), aluminum-clad elements (Simnad, 1980), and 1175°C for high-hydride-type ($U\text{-}ZrH_{1.6}$), stainless-steel-clad elements (Coffer et al., 1966; Simnad, 1980; Simnad et al., 1976). Cladding damage in the high-hydride-type, stainless-steel fuel is caused by a pressure buildup in the element as a result of the evolution of hydrogen produced by dehydriding of the fuel. Cladding damage in the low-hydride-type, aluminum-clad fuel is caused by a phase change that occurs at about 530°C. The 500°C safety limit for the reactor is determined by the cladding damage threshold temperature of the low-hydride-type, aluminum-clad fuel element.

The safety limit of 500°C for the hottest, B-ring, stainless-steel-clad fuel ensures that the maximum temperature of the single aluminum-clad fuel element will never approach 500°C, since its placement is restricted to the much cooler E or F rings. The DTRR Technical Specification LSSS of 300 kW ensures that a considerable margin of safety exists. This value is one-third of the 1-MW power level at which measurements have shown a maximum fuel temperature of 400°C. Scrams shut down the reactor whenever the reactor power reaches the LSSS of 300 kW. On the basis of radial, axial, and local power distributions, these requirements ensure that the above safety limit of 500°C maximum fuel temperature is not exceeded anywhere in the core.

4.4.3 Assessment

The staff concludes that the control and instrumentation systems (supplemented by the inherent, large, prompt, negative temperature coefficient of reactivity for the U-ZrH_x fuel moderator) provide the bases for the safe operation and controlled shutdown of the DTRR, during both normal operation and the insertion of all the excess reactivity [3.00$ (2.10% $\Delta k/k$)] authorized by the Technical Specifications. The inherent shutdown property of U-ZrH_x fuel has been the basis for designing the TRIGA reactors with a pulsing capability as a normal mode of operation. The automatic compensation provided by the prompt, negative temperature coefficient for excess reactivity insertions is capable of terminating resulting power excursions in the pulsing mode without using any mechanical or electrical safety systems or operator action. Even though the DTRR does not operate in the pulse mode, this feedback mechanism serves as a backup safety feature to the protective systems for mitigating the effects of accidental reactivity insertion and helping maintain constant power (temperature) during normal operations (Simnad, 1980; Simnad et al., 1976). (See also Section 14.2.)

The safety limits for the DTRR are based on theoretical and experimental investigations and are consistent with those used at other TRIGA-type reactors. Also, operating data at the maximum authorized reactor power level of other TRIGA reactors provide confidence that the maximum fuel element temperatures will be maintained far below the prescribed safety limits. TRIGA reactors using aluminum-clad fuel elements with a hydrogen-to-zirconium ratio of 1.0 have demonstrated safe and reliable routine operations at power levels up to 250 kW (Simnad et al., 1976). At 250 kW the maximum temperature rise in the B ring of these aluminum-clad fuel elements is about 180°C. At 300 kW, the proposed maximum power level for the DTRR, the maximum temperature rise in the E or F rings, the location of the single aluminum-clad fuel element in the DTRR, is estimated to be about 150°C. Increases in fuel temperature of this magnitude are supported by Merten et al. (1959), who show average rise in fuel temperature for aluminum-clad TRIGA fuel at 300 kW to be about 180°C. This is consistent with the above-quoted value of 150°C because fuel temperatures in the E and F rings are somewhat below average. These data indicate the temperature of the single aluminum-clad fuel element in the DTRR will remain significantly below the 530°C limiting temperature established by Simnad for aluminum cladding failure in low-hydride (U-$ZrH_{1.0}$) TRIGA fuel elements (Simnad, 1980).

TRIGA reactors using stainless-steel-clad fuel elements (>1.6 hydrogen-to-zirconium ratio) comprising all but one fuel element of the DTRR core have been

operated with the maximum fuel temperature well below the safety limit at power levels up to about 1.5 MW (Simnad, 1980; Simnad et al., 1976).

On the basis of the above considerations, the staff concludes that there is reasonable assurance that the DTRR can be operated safely at 300 kW, as limited by the current Technical Specification requirements.

4.5 Functional Design of Reactivity Control System

The power level in the DTRR is controlled by three control rods (one shim, one safety, and one regulating rod), all of which contain a mixture of boron carbide and aluminum oxide as the neutron poison. The core positions of the three control rods are shown in Figure 4.5. Individual rack-and-pinion electromechanical drives are used to move each control rod. Each control rod drive system is energized from the control console though its own independent electrical cables and circuits; this tends to minimize the probability of common cause malfunctions of the drives. Each control rod can be scrammed manually at the control console, or they can be scrammed as a group, either manually or automatically, by the safety circuits.

4.5.1 Control Rod Drive Assemblies

The control rod drive assemblies for the three control rods are mounted on a bridge assembly over the pool and consist of a motor and reduction gear driving a rack and pinion. A multiturn rheostat connected to the pinion generates the position-indication signal. Each control rod has an extension tube that extends to a dashpot below the surface of the water. The dashpot and control rod assembly are connected to the rack through an electromagnet and armature. If a power failure or scram occurs, the control rod magnet is de-energized and the rod falls into the core. The rod drive motor is nonsynchronous, single phase, and instantly reversible. It will insert or withdraw the control rod at a rate of about 20 in./min (51 cm/min). Electrical dynamics and static braking on the motor are used for fast stops.

Limit switches mounted on the drive assembly indicate the up and down positions of the magnets, the down position of the rod, and armature-magnet contact. The complete drive assembly is enclosed in an aluminum can.

4.5.2 Scram-Logic Circuitry and Interlocks

The scram-logic circuitry and interlocks ensure that several reactor core and operational conditions are satisfied in order that reactor operation may occur or continue.

The scram-logic circuitry functions by calling for the interruption of the current to the electromagnets holding the control rods, which causes the rods to drop into the core and shut down the reactor. A scram is initiated manually or on high reactor power, low reactor period, or loss of high voltage to the ion chambers. Interlocks are integrated into the control rod circuitry to provide additional safety; for example, interlocks prevent the simultaneous withdrawal of two control rods, which limits reactivity addition rates. Also, there must be an adequate neutron source signal available in the startup channel or

rod withdrawal is prohibited. This ensures that the instrumentation is monitoring the neutron flux and related conditions of reactivity. Additional details concerning the scram-logic circuitry and interlocks are provided in Section 7.

4.5.3 Assessment

The DTRR is equipped with safety and control systems, control rods, rod drives, scram-logic circuitry, and interlocks that have been maintained properly and have performed reliably and satisfactorily in the DTRR for over 21 years.

The control systems allow for an orderly approach to criticality and for safe shutdown of the reactor during normal and abnormal conditions. There is sufficient redundancy in the control rods to ensure safe reactor shutdown, even if the most reactive rod fails to insert on receiving a scram signal. Interlocks prevent inadvertent withdrawal of multiple rods and, thus, excessive positive reactivity changes. A manual scram button allows the operator to initiate a scram independently for any condition requiring a prompt shutdown. In addition to the active electromechanical control and safety systems, the large, prompt, negative temperature coefficient of reactivity inherent in the U-ZrH_x fuel moderator provides a backup safety feature. Additionally, since the DTRR is less than 20 percent enriched, 80 percent of the fuel is composed of U-238. U-238 exhibits strong absorption resonances in the epithermal neutron energy range, which widen as the fuel temperature increases (Doppler effect). This, in turn, increases the probability of neutron capture during slowdown, which reduces the available neutrons that can cause fission. This inherent shutdown feature enhances the prompt, negative temperature coefficient.

On the basis of the above discussion, the staff concludes that the reactivity control systems of the DTRR are designed adequately and will function to provide reasonable assurance of safety for the reactor as a whole as well as for the fuel elements for the period of this renewal. Additionally, inherent shutdown characteristics ensure the reactor will remain safe even in the extremely unlikely event the engineered reactivity control systems fail.

4.6 Operational Procedures

Dow Chemical Company has implemented administrative controls that require review, audit, and written procedures for all reactor safety-related activities. The Reactor Operations Committee (ROC) reviews all aspects of current reactor operation to ensure that the reactor facility is operated and used within the terms of the facility license consistent with the safety of the public as well as of the operating personnel. The responsibilities of this committee include review of operating procedures, experiments, and proposed changes to the facility or its Technical Specifications.

Written procedures reviewed by the ROC are established for safety-related activities, including reactor startup, operation, and shutdown; preventive or corrective maintenance; and periodic inspection, testing, and calibration of reactor equipment and instrumentation. The DTRR is operated by trained NRC-licensed personnel in accordance with these procedures.

4.7 Conclusion

The staff review of the DTRR has included a study of its design and installation and control and safety instrumentation. As noted previously, these features are similar to those typical of the research reactors of the TRIGA type operating in many countries of the world, 25 of which are licensed by the NRC. About 10 TRIGA reactors are operating at 1 MW or more with no apparent safety-related problems. On the basis of its review of the DTRR and because of the safe operating experience of these other facilities, the staff concludes that there is reasonable assurance that the DTRR is capable of safe operation as limited by its Technical Specifications.

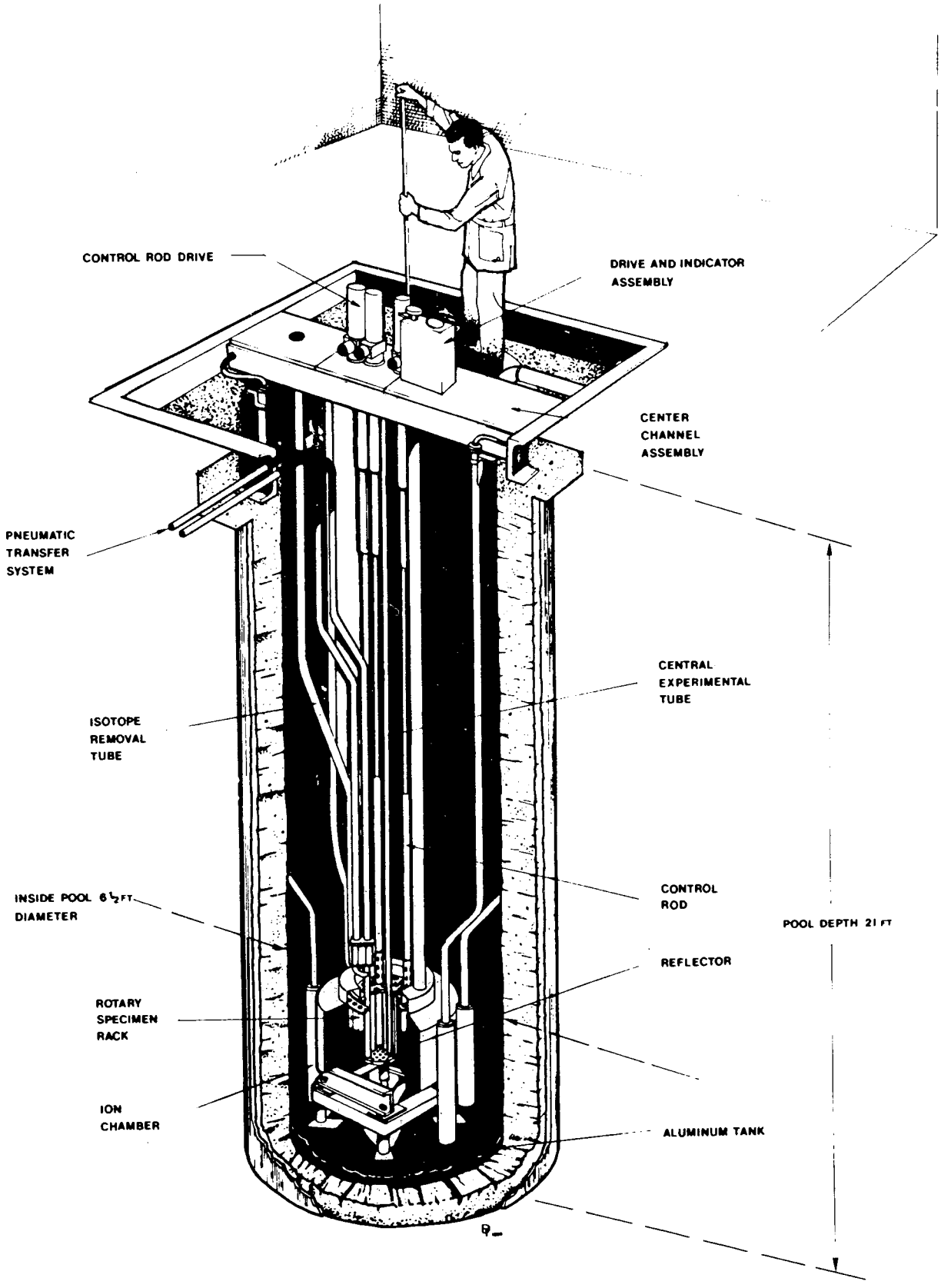

Figure 4.1 Cutaway view of DTRR
Source: Dow Chemical Co.

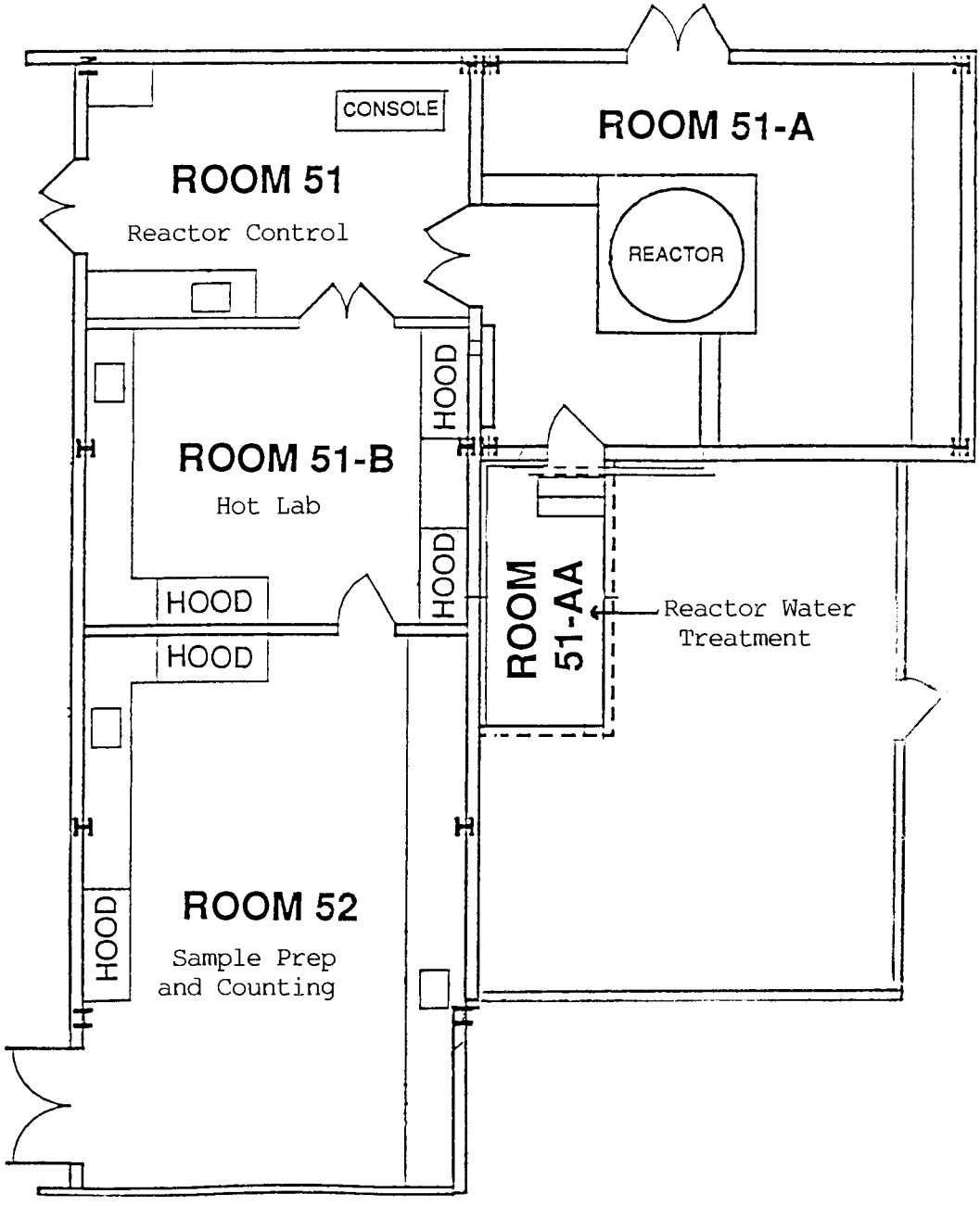

Figure 4.2 Layout of DTRR facility in the 1602 Building
Source: Dow Chemical Company

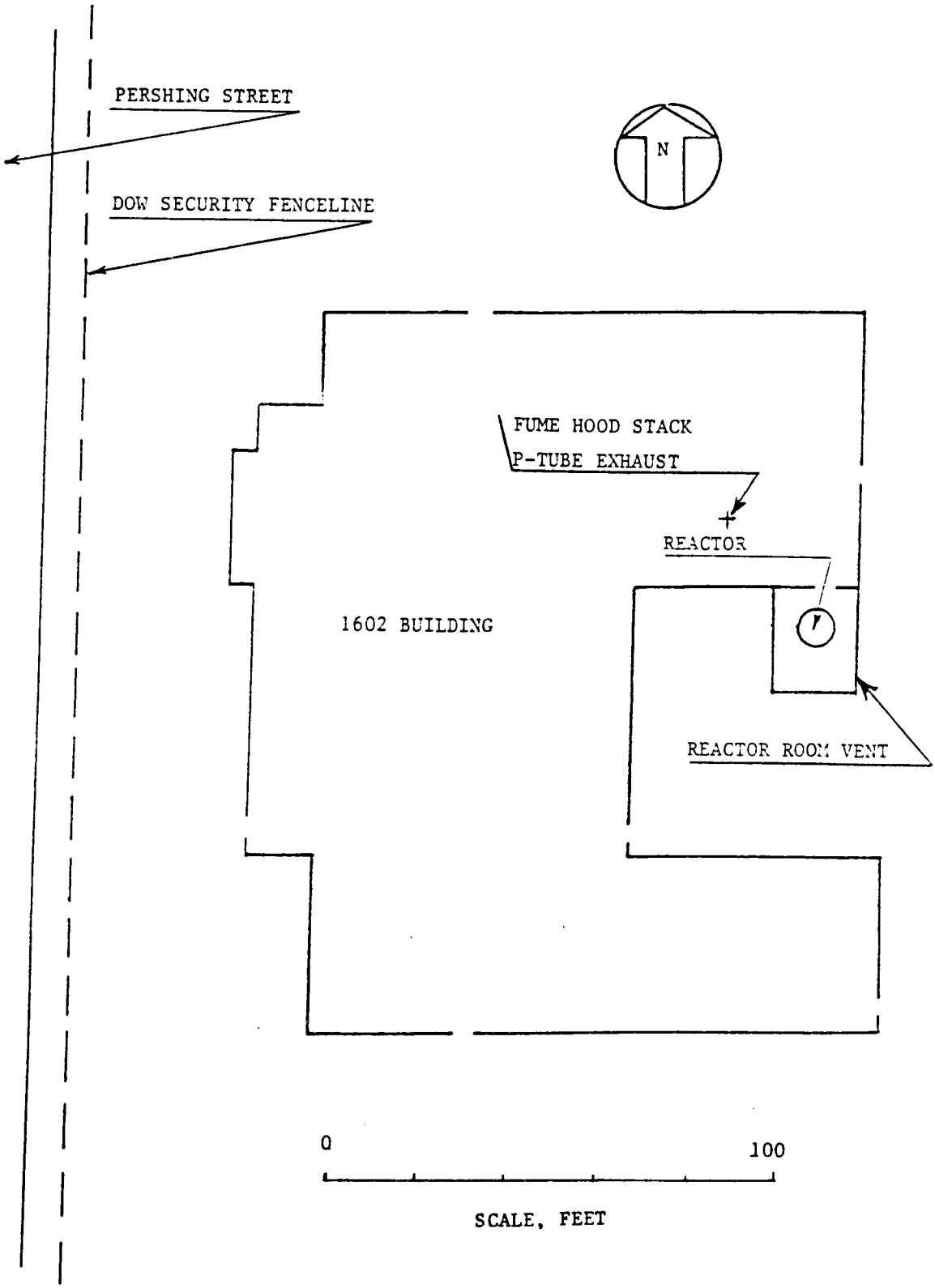

Figure 4.3 Location of the 1602 Building and reactor in relation to closest public unrestricted area
Source: Dow Chemical Company

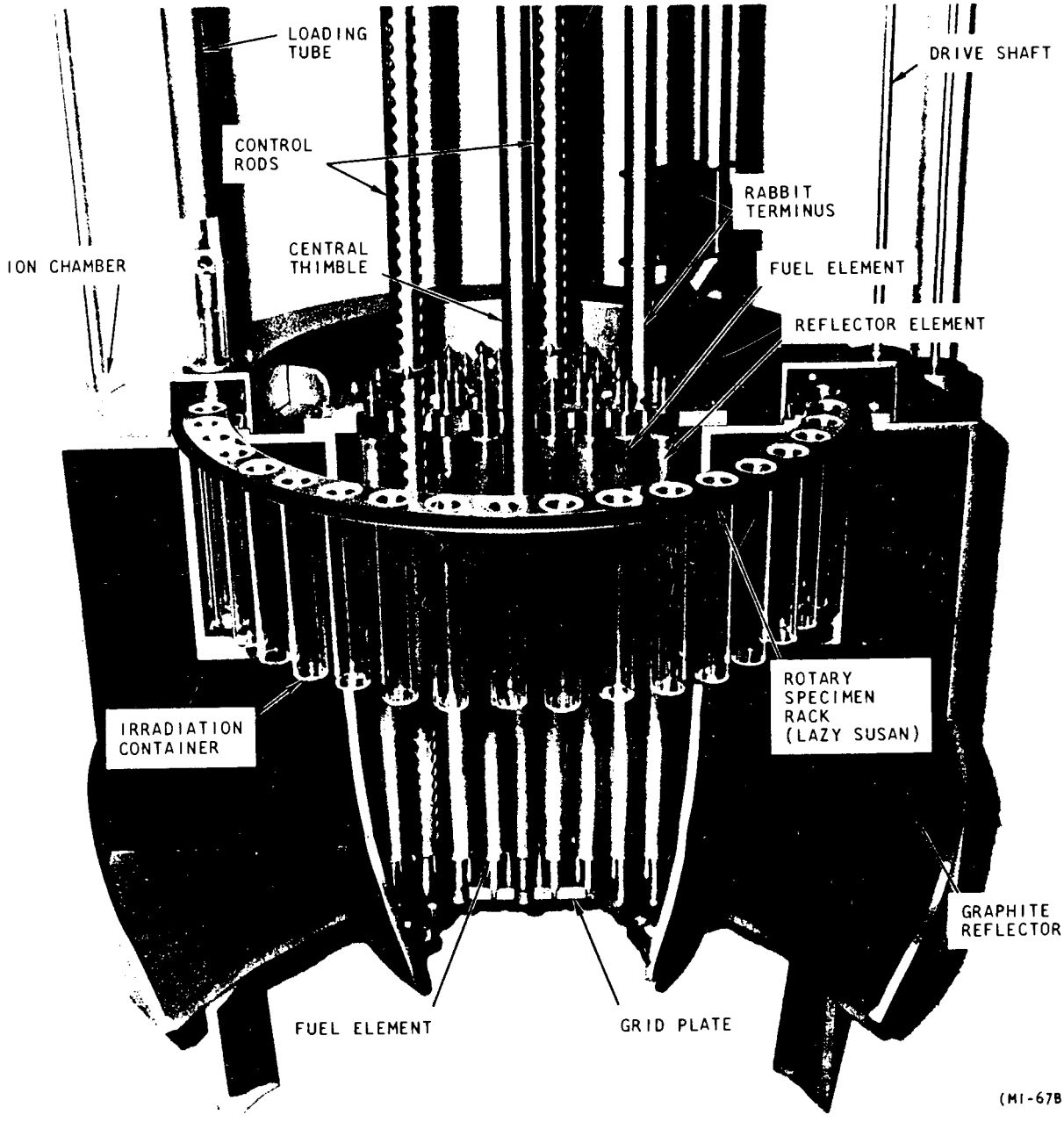

Figure 4.4 Cutaway view of DTRR core region
Source: General Atomics, used with permission

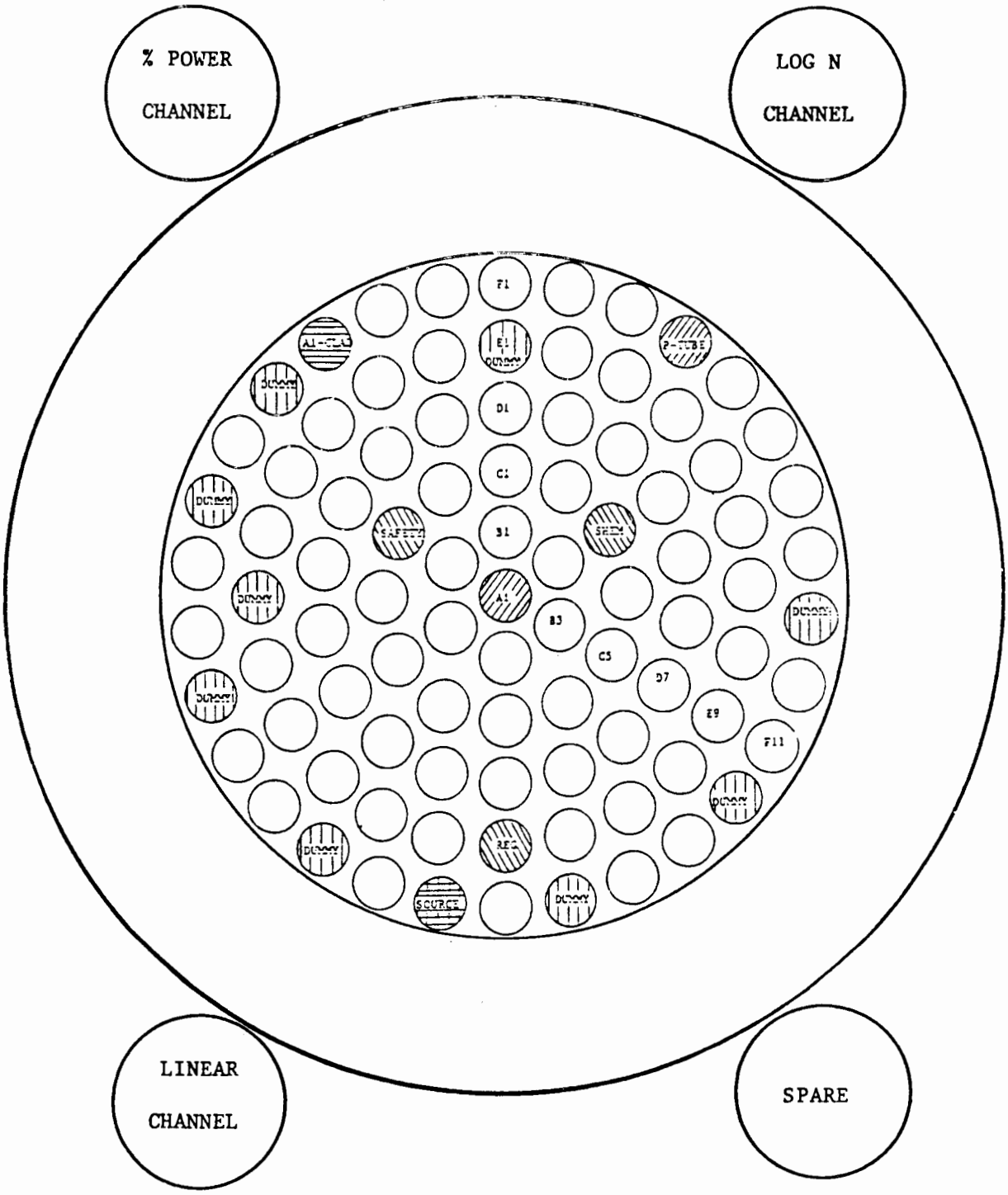

Safety Rod - C11; Shim Rod - C3; Regulating Rod - E13
Pneumatic Transfer System Terminus - F4; Central Thimble - A1
Source - F17; Aluminum-clad Fuel Element - F28
Graphite-loaded Dummy Elements - E1, E19, F9, F12, F15, F19, F22, F25, F27

Figure 4.5 DTRR core arrangement
Source: Dow Chemical Company

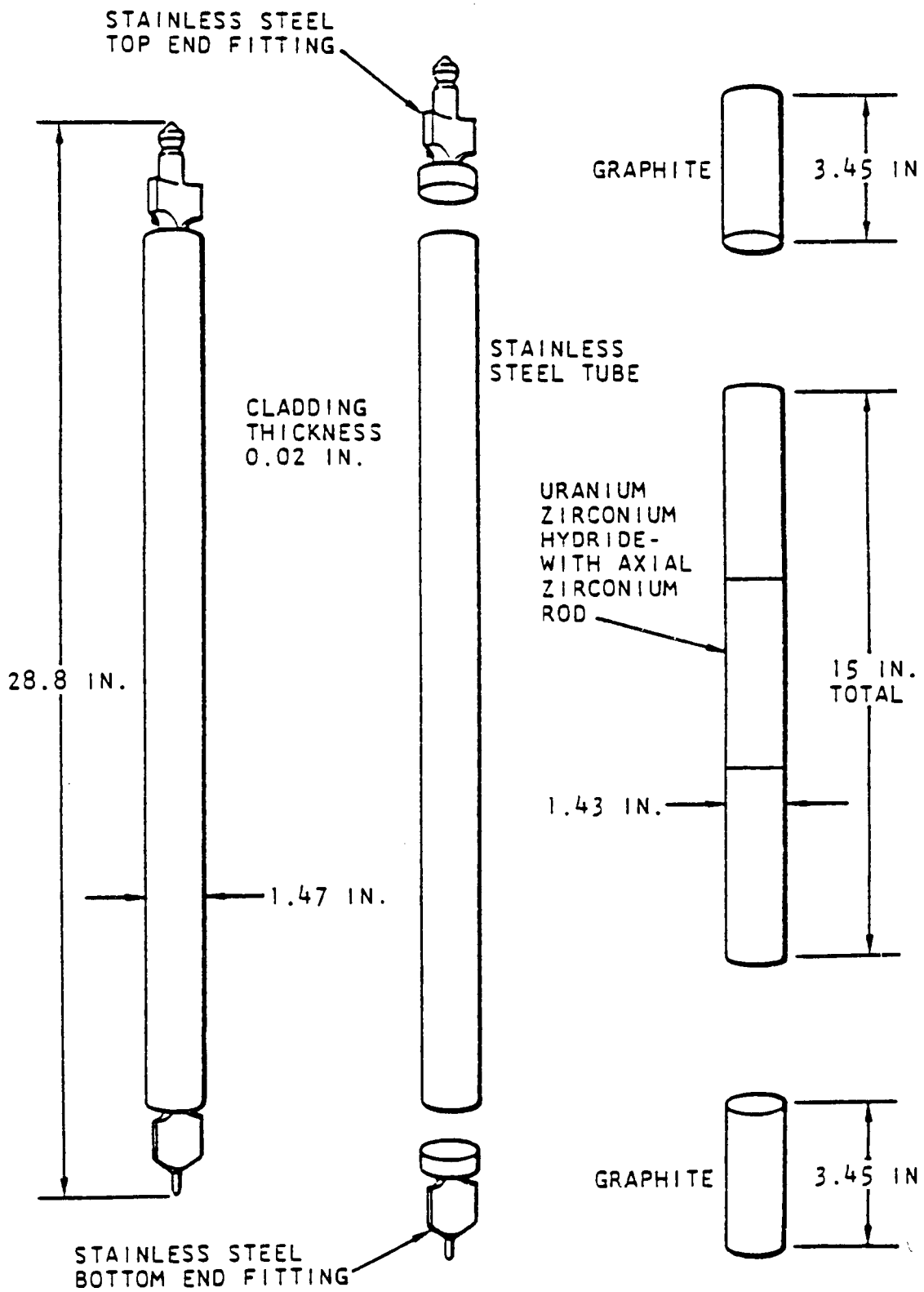

Figure 4.6 Typical TRIGA stainless-steel-clad fuel element
Source: Dow Chemical Company

Table 4.1 Principal design parameters for DTRR for proposed 300-kW operation

Parameter	Description
Reactor type	TRIGA Mark I
Maximum licensed power level	300 kW thermal
Fuel element design	
Fuel-moderator material	U-$ZrH_{1.6}$ and U-$ZrH_{1.0}$
Uranium inventory	2.73 kg U-235
Uranium content	8 wt% [both aluminum (Al)- and stainless-steel (SS)-clad elements]
Uranium enrichment	<20% U-235
Shape	Cylindrical
Length of fuel	14 in. (35.6 cm) - Al-clad element 15 in. (38.1 cm) - SS-clad element
Diameter of fuel	1.41 in. (3.58 cm) - Al-clad element 1.43 in. (3.63 cm) - SS-clad element
Cladding material and nominal thickness	Stainless steel [0.02 in. (0.05 cm) thick] or aluminum [0.03 in. (0.08 cm) thick]
Number of fuel elements	78
Weight U-235/fuel element	35g
Reactivity worths	
Excess reactivity	3.00$ (2.10% Δk/k) (Technical Specification maximum limit)
Safety rod (1)	~3.00$ (2.10% Δk/k)
Shim rod (1)	~3.00$ (2.10% Δk/k)
Regulating rod (1)	~1.00$ (0.70% Δk/k)
Total reactivity of rods	~7.00$ (4.90% Δk/k)
Reactor cooling	Natural convection of pool water
Reflector	Graphite, water
ß effective	0.007

5 REACTOR COOLING AND ASSOCIATED SYSTEMS

The DTRR core is cooled by the natural upward convection of water, which passes through holes in the grid plates and around the reactor fuel elements. The water in the reactor pool is purified and cooled, when necessary, at a water treatment center located in a room that is adjacent to the reactor room and is about 25 ft (8 m) west of the center of the core. A circulation of about 77 gpm (4.86 L/s) is maintained by a centrifugal pump; most of this flow, 70 gpm (4.42 L/s), is routed through a heat exchanger back into the reactor pool. To maintain the quality of the reactor coolant, the remainder of the flow [about 7 gpm (0.44 L/s)] is routed through a purification system. A schematic of the reactor cooling and purification system is given in Figure 5.1, and the cooling system instrumentation is described in Section 7.

5.1 Cooling System

The primary cooling system suction and return lines both enter the pool from the top. There are no penetrations of the reactor tank. The primary cooling system pump takes water from the pool, forces it through the shell side of the stainless steel tube and shell-type heat exchanger at the rate of 70 gpm (4.42 L/s), then sends it back to the pool. Secondary coolant is pumped from the Dow industrial water supply, through the tube side of the heat exchanger, then into the Midland municipal sewer system. The secondary cooling system is maintained at a higher pressure than the primary system to ensure that any heat exchanger leakage will be contained in the primary loop of the reactor facility. Any significant leakage would be detected by an increase of conductivity and by the pool water level monitor that has a low-level and high-level alarm.

Failure of primary system components or piping in the reactor water treatment room would lead to the loss of at most 1 ft (0.3 m) or 250 gal (946 L) of coolant, since antisiphon holes 1 ft (0.3 m) below the normal level of the coolant prevent any further loss. This presents no radiological risk to the public because the coolant would be retained in a pit located in the water treatment room. Radiological risk to Dow employees is considered negligible because the probability of this occurrence is very low (in the 21-year operating history, there has never been a piping failure) and, should one occur, the radioactivity of the pool water is very low (see Section 5.2). If a pipe failure were to occur, however, Dow Industrial Hygiene Department personnel would monitor and direct the cleanup operation.

5.2 Primary Coolant Purification System

Approximately 7 gpm (0.44 L/s) of primary coolant is routed through a monitor box that has probes to monitor conductivity and radioactivity of the water, then through a filter to remove particulate matter, a mixed-bed ion-exchange column to remove ionic material, another conductivity probe, and finally through a flowmeter back to the pool. The conductivity of the pool water as measured at the first probe is maintained at less than 5 μmhos/cm. In addition, the Technical Specifications limit primary coolant radioactivity to 0.1 μCi/ml or less.

5.3 Primary Coolant Makeup System

Makeup water to replace pool water lost as a result of evaporation ordinarily is supplied by the deionized steam condensate. Under emergency conditions, water from the secondary side can be rapidly added directly to the primary side (pool). Separation of this secondary water from the city water supply is maintained by (1) an antiflowback device in the line and (2) the building repressurizing system, which provides an air break between the city water system and the building water supply.

5.4 Conclusion

The staff concludes that the DTRR cooling system is of the proper size and design to ensure adequate cooling of the reactor under routine operating conditions at 100 kW as specified in the current DTRR operating license. The system has been maintained and is in acceptable condition to operate at 300 kW for the period of this renewal. Operating experience at 300 kW may indicate additional cooling capacity is needed. However, because of the large heat sink afforded by the pool water and the capacity of the present heat removal system, the staff concludes the DTRR can be operated safely at 300 kW. At 300 kW with the present (100-kW) heat exchanger operating at full-rated capacity, the adiabatic heatup rate of the pool water is about 9°C/hr. The reactor operating schedule will be controlled by the Technical Specification coolant bulk temperature limit of 60°C. The cooling and water purification systems at DTRR have the same design features as those used in many other operating TRIGA reactor facilities. There is no new or unproven technology involved in the system.

On the basis of the above observations, the staff concludes that the present natural convective cooling system and the purification system at the DTRR are adequate for safe operations at 300 kW. Increased operating schedules in the future may require the addition of increased cooling capacity.

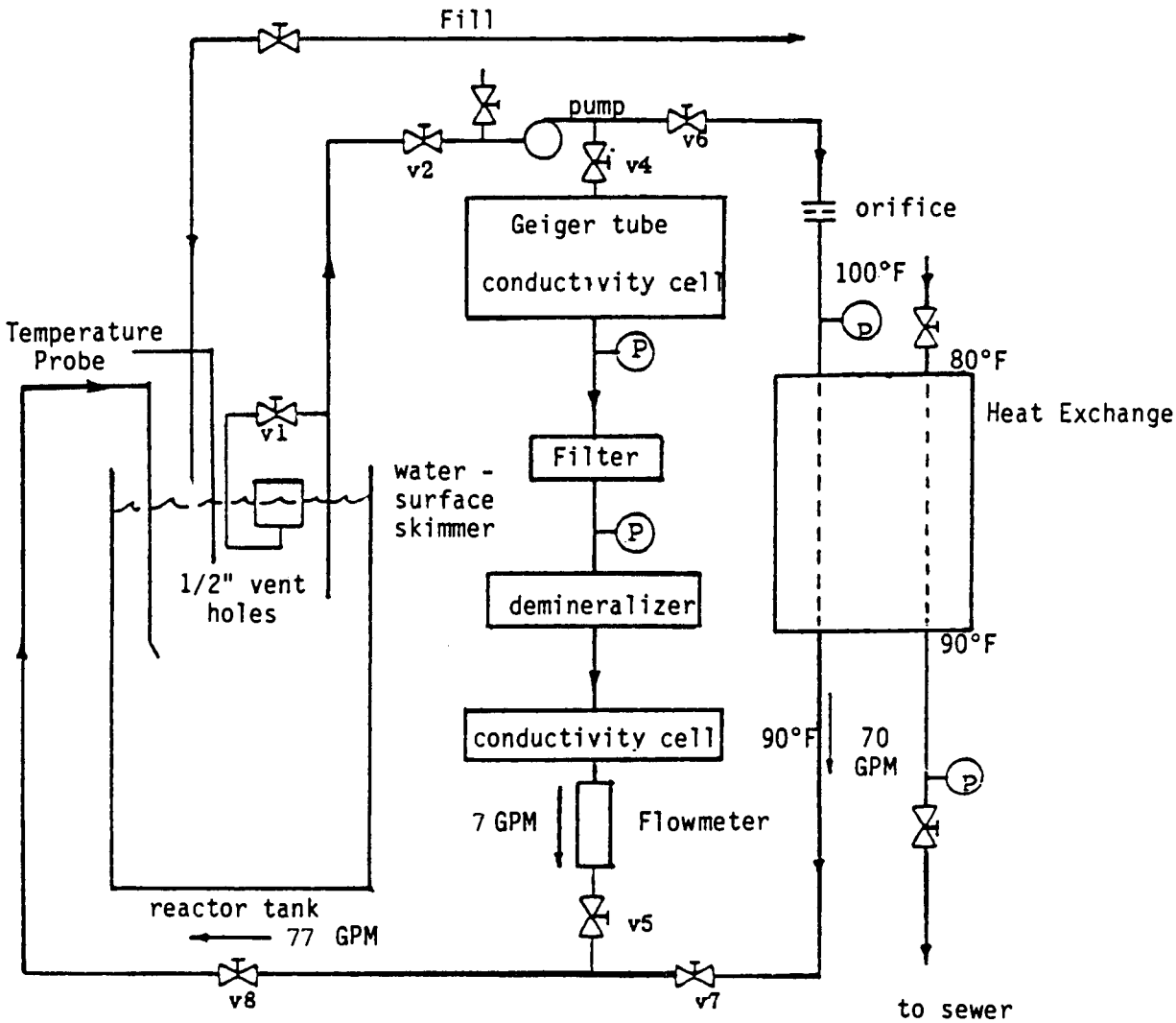

Figure 5.1 Reactor water cooling and purification system
Source: Dow Chemical Company

6 ENGINEERED SAFETY FEATURES

Engineered safety features are those features or systems that mitigate the potential consequences of accidents. The staff concludes that there are no engineered safety features required at the Dow TRIGA reactor.

7 CONTROL AND INSTRUMENTATION SYSTEMS

The reactor control and instrumentation systems are designed to provide the DTRR with safe reliable operation in both the manual and automatic operating modes. The control console, which is located in the control room, displays the reactor parameters, including power level, water temperature, and rod position.

7.1 Reactor Control System

The reactor control system consists of those components that control the operation of the reactor control rods as well as associated equipment appropriate for the reactor operating mode selected. The reactor control rods and rod drive mechanism are described in Section 4.

7.1.1 Control Console

The reactor control console contains the control, indicating, and recording instrumentation required for operation of the reactor. This instrumentation is located on either side of a dual-pen recorder and the operator's panel.

The operator's panel contains (1) rod-position indicators to show the position of the shim and regulating rods; (2) control rod switches to control the position of each rod and annunciator lights to indicate the up and down positions of each rod and rod magnet; (3) monitor alarm lights indicating the sources of scram signals; and (4) a locking switch that controls the power to the control rod electromagnet circuits, with its associated power-indicating light.

The dual-pen recorder provides a visible and permanent trace of the outputs of both the log power channel and linear channel #1. The log scale corresponds to the range of the log channel circuits, and the linear scale represents the switched output of linear channel #1.

7.1.2 Operating Modes

For the DTRR, two modes of operation are allowable: manual and automatic. The reactor is not configured for pulse operation.

7.1.2.1 Manual Mode

The reactor is always started up in the manual mode. The rods are controlled manually by the switches on the operator's panel. Should a scram signal occur, power to the electromagnets would be interrupted allowing the rods to insert into the core by gravity.

Two interlocks prevent operation in certain modes. The first of these prevents the withdrawal of two control rods simultaneously by manual actuation of the control rod drive motors. This prevents possible insertion of reactivity at an excessive rate. The second interlock prevents the withdrawal of control rods when the neutron count rate in the log channel is less than 2 counts/s (cps).

This interlock level was chosen because below this level the random nature of the neutron-induced counts would not provide a signal that could be relied on to provide secure control of the reactor.

7.1.2.2 Automatic Mode

The system that automatically maintains the reactor at a preset power level during long-term power runs consists of a servoamplifier that utilizes a signal from linear power channel #1, a power-demand signal set by the operator, and the derivative (rate) signal from the period circuit of the log power channel. The servoamplifier compares the reactor power with the power demand set by the operator and adjusts the in or out position of the regulating rod in accordance with the difference, thus controlling reactor power so that it is at the selected power level. It is also possible to use the servoamplifier control system for automatically changing power level within the limits of the regulating rod worth.

7.2 Instrumentation System

The instrumentation system consists of nuclear instrumentation and nonnuclear process instrumentation that provide the operator with the information necessary for the proper operation of the facility.

7.2.1 Nuclear Instrumentation

Three independent systems (one startup and two power-level) are used to process the input signals from the various nuclear detectors. Three detectors provide wide-range (from 10^{-3} W to 3×10^{5} W) indication from source range up to 100-percent power, with appropriate overlaps among the channels.

A fission chamber and associated circuitry that allows the use of a single channel from below the startup level to full power, without changing ranges, constitute the startup channel and the wide-range log N and period channel. The output from the fission chamber is fed to a poolside preamplifier and then to the main amplifier at the reactor control console. At this point the signal is applied to two amplifiers in parallel. One amplifier is used in the lower power ranges and utilizes the individual pulses from the detector; the second amplifier is used in the upper ranges and utilizes the ac component of the signal from the preamplifier. The outputs of these two amplifiers are appropriately biased, and the gains are set so that, when the signals are summed, the result is a smooth curve representing the power level of the reactor from below source level to the maximum. This signal is passed through a logarithmic amplifier and then on to the front-panel power level meter, the external recorder, and the source interlock circuit, which latches whenever the count rate from the detector becomes less than 2 cps. This signal is also differentiated, and the resultant signal is utilized in three ways: it is presented to the rate-of-power-increase (reactor period) meter on the front panel; it is presented to a circuit that interrupts the control rod electromagnet power whenever the rate of power increase reaches a set point; and it is presented to the automatic flux controller, where it is used in a feedback circuit that controls the automatic operating mode.

Power level channel #1 consists of a compensated ion chamber and a picoammeter with a range switch to give accurate power information from about source level to full power on the panel meter and on the linear recording unit of the dual-pen recorder. This channel is set to shut down the reactor by interrupting the current to the control rod electromagnets whenever the power level exceeds the limiting safety system setting (LSSS).

Power level channel #2 consists of an uncompensated ion chamber, a picoammeter, and a meter calibrated in percent of full power. This channel is set to shut down the reactor by interrupting the current to the control rod electromagnets whenever the power level exceeds a set point calculated to prevent operation of the reactor at levels greater than the LSSS.

Reactor Scram System

A reactor protective action will interrupt the magnet current and result in the immediate release of all rods when activated by a safety channel. The minimum required safety system channels and their set points are listed in Table 7.1.

7.2.2 Nonnuclear Process Instrumentation

The nonnuclear process instrumentation measures reactor coolant (water) temperature and water conductivity.

The water temperature monitor utilizes a thermocouple centered in the pool about 3 ft (0.9 m) below the surface of the water. The readout is a digital thermometer mounted on the reactor control console. A second thermocouple, installed in the cooling water supply for the heat exchanger for the pool water, can be selected by a switch on the console and read out on the same digital thermometer.

The water conductivity monitor consists of two conductivity probes and a detector with a digital readout. One probe is located upstream of the demineralizer, and the other is located downstream. Each conductivity probe consists of a platinum electrode conductivity cell that is shielded with glass. The cells are connected through a selector switch to the detection and readout circuit, which is mounted on the reactor control console.

7.3 Conclusion

The control and instrumentation systems at the DTRR, which are similar to those in other operating TRIGA reactors, are well designed, have been properly maintained, and will provide reliability and flexibility during the license renewal period. All power and instrumentation wiring is well identified and is protected from physical damage by conduits. There is redundancy and diversity in the nuclear power monitoring circuits. In particular, nuclear power measurements are overlapped in the ranges of the log-N, linear power, and percent power level channels. The control system is designed to shut down the reactor automatically if electrical power is lost or interrupted.

From the above analysis and the formal administrative controls required in the Technical Specifications for the operation of the DTRR, the staff concludes that both the control and instrumentation systems comply with the requirements

and performance objectives of the Technical Specifications and that they are acceptable to adequately ensure the continued safe operation of the reactor.

Table 7.1 Minimum required reactor safety system channels

Safety channel	Function	Set point
Manual scram	Scram	Manual
Linear power level	Scram	100% of maximum licensed power
Percent power level	Scram	100% of full scale
High power supply voltage	Scram	Loss of high power supply voltage
Magnet current	Scram	Loss of operating power
Minimum period	Scram	Not less than 7 seconds

8 ELECTRICAL POWER SYSTEM

The electrical power system at the DTRR facility is a standard electrical supply system designed and constructed to specifications similar to those at other research reactor facilities.

8.1 Normal Power

Electric power is supplied to the facility through a dedicated transformer located inside the Dow Chemical Company boundary fence. The power is supplied by Consumers Power Company.

8.2 Emergency Power

Emergency electrical power is supplied by trickle charged batteries that supply power to the security intrusion system and the smoke alarm system. Trickle charged batteries also are used to power emergency lighting at several locations in the DTRR facility. This ensures that each of these systems will continue to operate normally in case of a power failure.

8.3 Conclusion

The staff concludes that the electrical power system is a standard electrical supply system typical of research reactor facilities and is adequate for the proposed license renewal period. It also concludes that emergency power in addition to that currently available is unnecessary.

9 AUXILIARY SYSTEMS

9.1 Ventilation System

The reactor area has a dedicated 100-ton air conditioner, heater, and humidity control system, with associated filters. Fresh air for the reactor room is supplied from the outside by this dedicated system. Reactor room air is exhausted by a second fan to the outside. The air exhaust is furnished with a manual damper and the air intake with an automatic damper so the room can be sealed in the event of a release of radioactivity in the room. The air turnover rate is about 1700 ft^3/min (8×10^5 cm^3/s), corresponding to an air turnover time of about 3.5 minutes. The intake and exhaust systems are adjusted so that during operation the reactor room is kept at a negative pressure with respect to both the outside and the adjacent rooms. There are no seals on the doors from the reactor room or the pass-through from the reactor room into the hot laboratory other than those on the door to the outside to provide protection from the weather. Therefore, normal air flow is through the doors into the reactor room. This prevents backflow of materials from the reactor room to the adjacent rooms.

Air is supplied to the laboratory rooms adjacent to the reactor room by the dedicated ventilation system. The air for the hot laboratory and sample preparation and counting room is exhausted through the fume exhaust hoods. The exhaust rate of the hoods is about 4000 ft^3/min (1.8×10^6 cm^3/s); the hoods are normally run continuously for proper heating and air conditioning of the reactor area. The control room air is exhausted into the hallway next to the reactor area. In case of a spill of radioactivity in the hot laboratory, the doors can be closed, thus isolating the room and helping prevent contamination of the adjacent areas.

When the reactor ventilation systems are not powered, there is a net flow of air from the reactor room into the console/laboratory area; this flow is reduced but not cut off when the outside louvers of the reactor room ventilation system are both closed. This flow occurs because the air-handling system for the building produces a negative pressure within the building with respect to the outside.

The ventilation system in the reactor area can be shut down from the console by the operator. During such a shutdown a set of louvers on the inlet duct automatically closes.

9.2 Fire Protection System

The fire protection system for the DTRR consists of three portable fire extinguishers (two carbon dioxide and one Halon) at strategic locations in the reactor area and a smoke detector in the reactor console room. The smoke detector is powered by a noninterruptible power supply and is interfaced with the Dow Security Department console that is staffed at all times. The Dow Fire

Department, a part of the Security Department, is staffed at all times with professional firefighters, who, during test exercises, respond to the site within a few minutes of an alarm and who annually receive radiation training.

Additional fire protection to the reactor is provided by the Midland City Fire Department, which has a fire hydrant located outside the fence, about 80 ft (25 m) from the reactor building.

9.3 Communication System

An internal communication system and a commercial telephone are available to the control room operator. In addition, commercial phones are available in adjacent laboratories.

9.4 Air Conditioning System

The air in the reactor area is heated and cooled by the dedicated heating and cooling system.

9.5 Fuel Handling and Storage

Irradiated and new fuel elements are stored in the reactor room in three storage wells each about 11 ft (3.35 m) deep, which have shielding plugs and a locking mechanism at the top. Each well can store up to 19 TRIGA fuel elements while maintaining a safe geometry - dry or water flooded. These wells can be filled with water for shielding purposes. Also, fuel elements are manually rearranged in the core or moved to or from three additional storage racks in the reactor tank using specially designed long-handled tools. Each of these 3 reactor tank storage racks can hold up to 10 TRIGA fuel elements.

9.6 Conclusion

The staff concludes that the auxiliary systems at the DTRR facility are designed and maintained appropriately and are adequate for their intended purposes for the renewal period. The reactor area ventilation system and equipment are adequate to control the release of airborne radioactive effluents during normal operations in compliance with regulations. Fire protection at the reactor facility is adequate to provide protection against the types of fire hazards associated with the operation of a research laboratory, and the fuel-handling and storage capability is consistent with the DTRR requirements and is designed in accordance with good engineering practice. All of these auxiliary systems have performed adequately and reliably over the 21-year operating history of the DTRR.

10 EXPERIMENTAL PROGRAMS

The DTRR is used by the Dow Chemical Company as part of a research program involving neutron activation analysis, isotope production, neutron radiography, and irradiation studies. Specimens can be irradiated in the rotary specimen rack, a dummy fuel element, the pneumatic transfer tube, the central thimble, or the water volume near the core.

10.1 Experimental Facilities

10.1.1 Rotary Specimen Rack

The rotary specimen rack consists of an aluminum ring that can be rotated around the core. Forty aluminum cups are hung from the ring and serve as irradiation specimen holders. The ring is rotated from the reactor bridge at the top of the water tank so that any cup can be aligned with the single specimen tube that runs to the top of the well. The cups are positioned by an indexing and keying device. In a radial direction the cups are positioned about 4 in. (10 cm) from the inner edge of the reflector assembly. The cups extend down from the top grid plate to about 4 in. below the top of the active lattice.

10.1.2 Dummy Fuel Elements

The dummy fuel elements (made of stainless steel) can accommodate small samples for long periods of in-core irradiation. The units may replace any fuel element or graphite-filled reflector element in the core.

10.1.3 Pneumatic Transfer System

The pneumatic transfer system consists of two tubes connecting a sender-receiver station in the hot chemistry hood with a terminal station in the reactor core. The specimen runs in one tube, and a blower evacuates one side or the other of the specimen through the second tube to provide pressure difference for moving the specimen.

10.1.4 Central Thimble and Beam Port

The central thimble is provided to permit irradiation of experiments in the region of maximum neutron flux. It can also be used to provide a highly collimated beam of neutrons and gamma rays when it is emptied of water. The thimble is an aluminum tube with an inside diameter of 1.33 in. (3.38 cm). It extends from the top of the tank through the two grid plates and terminates in a plug at a point about 7.5 in. (19 cm) below the lower grid plate. The tube is normally filled with water but can also serve as a beam tube by voiding it to a point slightly above the upper grid plate, using a gas such as helium. Four 0.25-in. (0.64-cm)-diameter holes are drilled in the tube directly above the upper grid plate preventing the production of a void in the region of the core during its use as a beam tube.

10.1.5 Water Volume Near Core

Experiments involving irradiation in the water volume near the core are placed in closed, watertight plastic containers weighted with lead bricks and lowered to the surface of the core using redundant retrieval equipment.

Experiments involving such irradiations are classified as special experiments and must have the evaluation and approval of the Reactor Supervisor and the Reactor Operations Committee.

10.2 Experimental Review

Before any new experiment may be conducted using the reactor or the associated experimental facilities, it is reviewed by the Reactor Operations Committee (ROC). This committee consists of the Technical Manager (who is the chair), the Radiation Safety Officer, the Reactor Supervisor, and one or more persons who are competent in the field of reactor operations. The membership of the committee is designed to provide a spectrum of expertise for the review of the experiments and their potential hazards. The review and approval process for experiments also allows personnel experienced in reactor operations to consider and suggest restrictions and alternative operational conditions, such as different experimental facilities, power levels, and irradiation times, that might lead to decreased personnel exposure and/or decreased potential release of radioactive materials to the environment. Restrictions generally include requirements that the experiment remain sealed, that no materials be released to the pool if the experiment should be breached, and that the experiment and its components be monitored for the presence of radiation and of loose radioactive material as they are removed from the pool. Specific restrictions may also apply, depending on the nature of the experiment.

The review process also considers the effect of the experiment on the convective flow of water through the core of the reactor. Convective cooling flow at any power level must not be disturbed in a way that would lead to overheating of any part of the core. The size and position of the proposed experiments will determine the effect on the flow of water.

10.3 Experiment Reactivity Limitations

The Technical Specifications include a 0.75$ (0.53% $\Delta k/k$) limit of reactivity for each movable experiment and a maximum of 1.00$ (0.70% $\Delta k/k$) total reactivity insertion for all combined experiments in the reactor at any one time. In Section 14.2, the staff evaluates the consequences of inadvertent reactivity insertions higher than the above Technical Specification limitations. The staff concludes that the reactivity limitations in the Technical Specifications will ensure that increases in fuel and cladding temperature will remain well below the safety limit in the unlikely event that all of this reactivity is added to the DTRR in a stepwise fashion.

10.4 Conclusion

The staff concludes that the design of the experimental facilities combined with the detailed review and administrative procedures applied to all research activities is adequate to ensure that experiments (1) are unlikely to fail, (2) are

unlikely to release significant radioactivity to the environment directly, and (3) are unlikely to cause damage to the reactor systems or its fuel. Therefore, the staff believes that reasonable provisions have been made so that the experimental programs and facilities do not pose a significant risk of damage to the reactor or of an uncontrolled release of radioactive materials that would pose a significant radiological risk to the facility staff or the public.

11 RADIOACTIVE WASTE MANAGEMENT

The major radioactive waste generated by reactor operation is activated gases, principally argon-41 (Ar-41) and nitrogen-16 (N-16). Small volumes of liquid and solid radioactive waste are also generated, primarily in connection with the operation and experimental uses of the reactor.

11.1 As Low As Reasonably Achievable (ALARA)

11.1.1 ALARA Policy Statement

The following ALARA (as low as reasonably achiveable) policy statement was signed by the Vice President, Director of Applied Research and Development, Dow Chemical U.S.A., and was transmitted to the NRC by letter dated August 14, 1987.

> The principle of As Low As Reasonably Achievable (ALARA) forms the basis of the radiation protection program of Dow Chemical U.S.A.
>
> Close adherence to the principle of ALARA is of paramount importance to the achievement of the Dow goal of minimizing occupational exposures to radiation and releases of radioactive materials.

11.1.2 ALARA Commitment

All radioactive materials are handled and released and all exposure to ionizing radiation is controlled in accordance with the ALARA principle. The objectives of the ALARA principle are to minimize the exposure of individuals to ionizing radiation, to minimize the production of radioactive materials, and to minimize the release of radioactive materials to the uncontrolled environment. Training, planning, shielding, practice sessions, distance, special tools, monitoring, and design of experiments are used to achieve the goals of the ALARA program.

11.2 Waste-Generation and -Handling Procedures

11.2.1 Solid Waste

The disposal of spent fuel is not expected to occur during the term of this license renewal; however, should the reactor be decommissioned during the license period (which is not planned at this time), the Dow Chemical Company has entered into a contract with the U.S. Department of Energy (Contract #DE-CR01-83-NE-44483) for the ultimate disposal of the fuel. During normal operation, the largest volume expected of solid radioactive waste is slightly contaminated paper and plastic material. Most of the activity in the solid radioactive waste is found in activated samples, components, and equipment. Solidified spent ion exchange resin [about 2.8 ft^3 (0.08 m^3) every 3 or 4 years] is also treated as solid radioactive waste (see Section 11.2.2). The solid waste is collected in specially marked packages by the Dow Industrial Hygiene Group staff. The waste is held temporarily before being packaged and shipped to an approved disposal site in accordance with applicable regulations.

11.2.2 Liquid Waste

The largest volume of contaminated liquid is produced by the water purification system spent ion exchange resin. This liquid plus waste liquid from experiment solutions is collected in holding containers. This waste is subsequently dried and disposed of as long-lived low-level radioactive solid material.

11.2.3 Airborne Waste

Airborne discharges from the reactor facility include Ar-41 from the activation of air dissolved in the pool water and Ar-41 from the activation of air contained in the pneumatic sample transfer system. Small amounts of N-16 are also generated from the activation of oxygen in the pool water.

Ar-41 from the pool water is released into and diluted by the reactor room air, which is continuously exhausted by the ventilation system during reactor operation. The licensee calculates that the maximum release rate of Ar-41 from the pool water would be 0.21 μCi/s at a reactor power of 300 kW. The maximum equilibrium concentration of Ar-41 at a reactor power of 300 kW would be 2.6×10^{-7} μCi/ml, which is about one-tenth the value listed in 10 CFR Part 20, Appendix B, for occupational exposures in restricted areas.

Ar-41 at reactor room concentrations is exhausted from the building at a point 8 ft (2.44 m) above the ground level on the east side of the building, which is an area controlled by the licensee and only occasionally frequented by personnel.

Ar-41 is also produced in and released from the pneumatic sample transfer system when it is used during reactor operation. The licensee has estimated that the maximum amount of Ar-41 produced by this system is 1.6 μCi/s, and that the system is used approximately 10 percent of the reactor operating time. The Ar-41 formed in the pneumatic transfer system is exhausted from the building directly by way of a fume hood exhaust stack 9 ft (2.74 m) above the roof of the building at a rate of 1000 ft^3/min (4.7×10^5 cm^3/s). The resulting maximum concentration, in occasional puffs, is 3.4×10^{-6} μCi/ml, which is less than twice the concentration limit listed in 10 CFR Part 20, Appendix B, for continuous occupational occupancy in a restricted area.

Personnel access to the roof in the vicinity of the exhaust stack is very infrequent and is under the control of the licensee. It should also be noted that the operating schedule of the DTRR has averaged in the past, and is expected to average in the future, less than 10 percent of the available work schedule, so the total annual release of airborne Ar-41 will generally average only a small fraction of the amounts discussed above.

Significant quantities of N-16 are produced in the core of the reactor by the (n,p) reaction on oxygen-16. However, the short half-life of N-16 of 7 seconds along with a coolant transport time to the surface of the pool of about 42 seconds results in substantial decay. When the reactor cooling system is in operation, the interruption of the vertical convection current by the discharge of treated water downward further increases the transport time.

Only a small proportion of the N-16 atoms present near the pool surface are transferred into the air of the reactor room. When an N-16 atom is formed,

it appears as a recoil atom with various degrees of ionization. For high-purity water (approximately 2 μmhos), practically all of the N-16 combines with the oxygen and hydrogen atoms of the water. Most of it combines in an anion form, which has a tendency to remain in the water. Therefore, the primary hazard of N-16 is the radiation field at the surface of the pool, which is discussed in Section 12 of this SER. An insignificant amount of N-16 becomes airborne compared with Ar-14.

The nearest unrestricted area at the Dow facility is at the fence approximately 140 ft (40 m) from the fume hood exhaust stack. The nearest permanent residence is 1600 ft (490 m) from the stack. None of the sources of airborne radioactivity could lead to average annual concentrations at these locations that exceed the limits specified in 10 CFR Part 20, Appendix B, for unrestricted areas (see Section 12.6.1).

11.3 Conclusion

The staff concludes that the waste management activities at the DTRR facility have been conducted and are expected to be conducted in a manner consistent with 10 CFR Part 20 and the ALARA principle. Among other guidance, the staff in its review has followed the methods of ANSI/ANS 15.11, "Radiological Control at Research Reactor Facilities."

Because Ar-41 is the only significant radionuclide released by the reactor to the environment during normal operations, the staff has reviewed the history, current practices, and future expectations of reactor operations with respect to this radionuclide. Because of the extremely small amounts of Ar-41 released from the DTRR over the past 21 years at the maximum authorized power level of 100 kW and the maximum expected releases of Ar-41 at the increased power level of 300 kW, the staff concludes that the release of Ar-41 in the reactor restricted areas, areas under Dow control, and unrestricted areas outside the Dow boundary fence will be very small compared with the limits specified in 10 CFR Part 20 when averaged over a year.

12 RADIATION PROTECTION PROGRAM

Dow Chemical U.S.A. has a structured radiation safety program with a health physics staff to implement the program. The reactor facility has the equipment to detect, measure, and control area and personnel radiation exposures. Use of radioactive material and radiation sources is controlled carefully, and releases of radioactive material to the environment are kept to a minimum.

12.1 ALARA Commitment

The Dow radiation protection program is designed to be consistent with the policy of ALARA (as low as reasonably achievable).

Dow Chemical U.S.A., through the Radiation Safety Committee, has developed a training program that incorporates procedures and equipment to implement this policy. Personnel and environmental monitoring programs ensure that radiation exposures to Dow employees and the general public are kept ALARA.

12.2 Health Physics Program

12.2.1 Health Physics Staffing

The Dow corporate Industrial Hygiene Department is staffed by professional health physics and industrial hygiene specialists who monitor and oversee the radiation protection program and serve as resource persons for all the users of radiation and radioactive materials at the Midland location. The normal radiation safety function at the reactor facility is implemented by reactor personnel. One of the health physicists from the Industrial Hygiene Department is designated the Radiation Safety Officer and is on call at all times to respond to emergencies. He oversees the radiation protection program at the reactor facility and participates in the review and approval of experiments through his position on the Reactor Operations Committee (ROC). The reactor operations staff performs many health physics-type activities and is assisted by and can consult with the Industrial Hygiene Department.

12.2.2 Procedures

The licensee has prepared detailed written procedures that address the radiation safety support that is expected to be provided to the routine operation of the DTRR facility. These procedures identify the interactions between the operational and experimental personnel and also specify numerous administrative limits and action points, as well as appropriate responses and corrective actions if these limits or action points are reached or exceeded. Requests for authorization to use radioactive materials are reviewed by the health physicist and the Radiation Safety Committee.

12.2.3 Instrumentation

Dow has a variety of detecting and measuring instruments for monitoring potentially hazardous ionizing radiation at the Midland site. The instrument calibration procedures and techniques ensure that any credible type of radiation and any significant intensities can be detected promptly and measured correctly.

12.2.4 Training

The health physics training for reactor operations personnel is provided during an initial 3-hour training session by certified health physics personnel of the Dow Industrial Hygiene Department; by a lengthy classroom and hands-on program conducted by the training coordinator and other persons experienced in the handling of radioactive materials during reactor operator license training; and by an annual requalification program conducted by both health physics personnel and the training coordinator.

The health physics training for reactor users includes both the initial health physics/industrial hygiene training and hands-on training by experienced persons on the reactor staff; annual retraining/review is provided by the health physics/industrial hygiene personnel.

12.3 Radiation Sources

12.3.1 Reactor

Sources of radiation directly related to reactor operations include the reactor core, the ion exchange column in the cooling water cleanup system, and radioactive gases, primarily Ar-41.

The fission products are contained within the fuel's stainless steel or aluminum cladding. Radiation exposures from the reactor core are reduced to acceptable levels by water and concrete shielding. The ion exhange resins are changed routinely before high levels of radioactive materials have accumulated, thus limiting personnel exposure.

The radiation level at the grating over the pool at 100 kW with the primary cooling system in operation is about 10 mR/hr. The radiation field increases to about 13 mR/hr when the reactor cooling system is off. This radiation field is caused by a combination of direct shine from the reactor core and from N-16. Personnel exposure from production of N-16 (7-second half-life) is limited by the decay that occurs during the approximately 40 seconds required for transport of the coolant from the core to the surface of the pool. This transport time is further increased when the primary cooling system is in operation. Personnel exposure is also limited by restricting the amount of time that is spent working over the pool when the reactor is in operation.

At the increased operating power of 300 kW, it is estimated that the radiation field will increase to about 30 mR/hr with the primary cooling system in operation. The radiation level will be confirmed and evaluated as part of the testing program involved with power ascension. Work over the pool with the reactor in operation will be planned and carried out using the ALARA principle.

Personnel exposure to the radiation from chemically inert Ar-41 is limited by dilution and prompt removal of this gas from the reactor area and its discharge to the atmosphere, where it diffuses further before reaching unrestricted areas.

12.3.2 Extraneous Sources

Sources of radiation that may be considered as incidental to the normal reactor operation but associated with reactor use include radioactive isotopes produced for research, activated components of experiments, and activated samples or specimens.

Personnel exposure to radiation from intentionally produced radioactive material as well as from the required manipulation of activated experimental components is controlled by extensively developed and reviewed operating procedures that use the normal protective measures of time, distance, and shielding.

12.4 Routine Monitoring

12.4.1 Fixed Radiation Monitoring System

Fixed radiation monitors are located in three places: in the water monitor vessel, in the reactor room over the door leading to Lab 51, and at the south wall of the reactor room.

The unit in the water monitor vessel at the water purification and cooling skid consists of a Geiger tube in the reentrant tube of the water monitor box and associated electronics at the reactor control console. When the radioactivity in the water induces a signal greater than the adjustable set point, an audible signal is generated at the reactor control console.

The unit in the reactor room over the door leading to Lab 51 is a Geiger tube. This unit has two readout positions: one at the site of the detector and one at the reactor console. The readout at the reactor console is equipped with an adjustable latching set point and both audible and visual alarms. This unit monitors the general level of radioactivity in the reactor room and will respond both to airborne radioactive materials and to radioactive sources exposed in the room.

The unit at the south wall of the reactor room is a continuous air monitor that continuously pumps air from the reactor room through a filter placed near the window of a Geiger tube. When the radioactive materials trapped on the filter generate a signal above the adjustable latching set point, the circuits activate a loud bell, a bright flashing red light, and a signal to the Dow Security Department dispatcher's desk, which is staffed at all times. Power failures generate a separate signal to the dispatcher's desk. The set point for this system is approximately three times the maximum natural background level.

In addition to the three fixed radiation monitors, portable survey meters are available for routine use in the laboratories and for checking the radioactivity of samples removed from the core of the reactor. Thin-window Geiger-tube detectors are used in the laboratories to monitor equipment and people for traces of radioactive contamination.

12.4.2 Experimental Support

The health physics staff of the Industrial Hygiene Department participates in the planning of experiments through its membership in the Reactor Operations Committee by reviewing all proposed procedures for methods of minimizing personnel exposures and limiting the generation of radioactive waste. Approved procedures specify the type and degree of radiation safety support required by each activity.

12.5 Occupational Radiation Exposures

12.5.1 Personnel Monitoring Program

The DTRR staff and other users of the DTRR facility are issued film badges and thermoluminescence dosimeters by the health physics personnel of the Industrial Hygiene Department to monitor their radiation exposure. Visitors are normally issued film badges.

12.5.2 Personnel Exposure

The annual exposure history of DTRR personnel for the years 1982-1986 is given in Table 12.1. The results indicate that the management of potential radiation exposure at the DTRR facility is acceptable and well within 10 CFR Part 20 guidelines. These results are not expected to be affected by the increase in maximum licensed power level from 100 kW to 300 kW.

12.6 Effluent Monitoring

12.6.1 Airborne Effluents

As discussed in Section 11, airborne radioactive effluents from the reactor facility consist principally of low concentrations of Ar-41 in the reactor room from activation of air dissolved in the pool water and in the pneumatic sample transfer system from neutron activation of air. The 0.21 μCi/s of Ar-41 released into the reactor room from the pool with the reactor operating at 300 kW would be diluted by the 4600 ft^3 (1.3×10^8 cm^3) volume of air in the reactor room and then exhausted by the ventilation system to the outside of the building. The Ar-41 released when the pneumatic transfer system is actuated is exhausted above the roof by way of a fume hood exhaust stack.

Both of these sources release the radioactive material to the air outside the reactor building, which then may diffuse toward the nearest barrier to the unrestricted environment, a fence about 140 ft (43 m) away. Assuming that the Ar-41 is further diluted by at least 10^{-2} during this diffusion path, the concentrations of Ar-41 would be reduced to at most 6×10^{-9} μCi/ml. Table B-1, Appendix B of Regulatory Guide 1.109 (Revision 1, October 1977) shows that for a semi-infinite cloud, the projected upper limit to the whole-body dose would be 53 mrad/yr assuming the reactor is in constant operation.

When accounting for the fact that only a small finite cloud is possible for such a reactor and at such close distances, and that the assumed schedule (continuous) is unrealistic at such a reactor, the maximum projected dose in the unrestricted environment due to Ar-41 would be about 1 mrem/yr.

12.6.2 Liquid Effluents

The reactor generates no radioactive liquid waste during routine operations. If small quantities of liquid waste are generated by some cleaning of contaminated equipment or replacement of ion exchange resin from the water purification system, they are collected and solidified by the Industrial Hygiene Department staff and disposed of off site in accordance with applicable regulations.

12.6.3 Environmental Monitoring

The environmental monitoring program at the Dow Midland site consists of performing routine radiation surveys at selected locations by the Industrial Hygiene Department. Typical results of this program indicate that the contribution from the reactor to radiation levels in the surrounding areas is negligible.

12.6.4 Potential Dose Assessment

Natural background radiation levels in the central Michigan area result in an exposure of about 120 mrem/yr to each resident in the area. At least an additional 7 percent, about 8 mrem/yr, will be received by those living in a brick or masonry structure. Any x-ray examination will add to the natural background radiation, increasing the total accumulative annual exposure.

Conservative calculations based on the effluents from the facility and the results of the environmental monitoring program indicate that reactor operations do not contribute significantly to the annual exposures in unrestricted areas.

12.7 Conclusion

The staff concludes that the radiation protection program at the DTRR facility receives appropriate support from the Dow Chemical Company. The staff further concludes that (1) the staff and equipment to implement the program are adequate, (2) the reactor health physics staff has adequate authority and lines of communication, (3) the procedures are integrated correctly into the research plans, and (4) surveys verify that operations and procedures follow the ALARA principle.

Additionally, the staff concludes that the DTRR radiation protection program is adequate on the basis of the results of personnel monitoring and the environmental monitoring programs. Furthermore, there is reasonable assurance that personnel and procedures will continue to protect the health and safety of the public during routine operations.

Table 12.1 Number of individuals monitored for whole-body exposure

Whole-body exposure (rem)	Number of individuals				
	1982	1983	1984	1985	1986
No measurable exposure	8	7	13	9	6
0.01	-	1	-	2	-
0.02	-	1	-	1	1
0.03	1	-	-	-	-
Number of individuals monitored	9	9	13	12	7

13 CONDUCT OF OPERATIONS

13.1 Overall Organization

Responsibility for the safe operation of the reactor facility is vested within the chain of command shown in Figure 13.1. The Reactor Supervisor is delegated responsibility for overall day-to-day facility operation.

13.2 Training

Reactor operators are trained by Dow personnel. The licensee's Operator Requalification Program was revised in August 1987 in conjunction with this license renewal application, and the staff concludes that it meets the applicable regulations [10 CFR 50.54(i-1) and 10 CFR 55] and is consistent with the guidance of ANSI/ANS 15.4.

13.3 Operational Review and Audits

The Dow Reactor Operations Committee (ROC) provides independent review and audit of facility activities. The Technical Specifications outline the qualifications that members must possess. The ROC must review and approve plans for modifications to the reactor, new and certain classes of experiments, and proposed changes to the license or procedures. The ROC also is responsible for directing audits of reactor facility operations and management and for reporting the results thereof to the facility administration.

13.4 Emergency Planning

10 CFR 50.54(q) and (r) require that a licensee authorized to possess and/or operate a research reactor follow and maintain in effect an emergency plan that meets the requirements of Appendix E of 10 CFR Part 50. A revised Emergency Plan dated 1986 was submitted by the licensee in conjunction with this license renewal application. The staff concludes that the revisions do not decrease the effectiveness of the Emergency Plan, and that the Emergency Plan is in compliance with the regulations.

13.5 Physical Security Plan

The licensee has established and maintains a program to protect the reactor and its fuel and to ensure its security. The NRC staff has reviewed the revised Physical Security Plan in conjunction with this license renewal application and concludes that it meets the requirements of 10 CFR 73.67 for special nuclear material of low strategic significance. The DTRR inventory of special nuclear material for reactor operation falls within that category.

Both the Physical Security Plan dated June 1987 and the staff's evaluation are withheld from public disclosure under 10 CFR 2.790(d)(1). The amendment renewing Facility Operating License R-108 incorporates the Physical Security Plan as a condition of the license.

13.6 Conclusion

On the basis of the above discussions, the staff concludes that the licensee has sufficient experience, management structure, and procedures to provide reasonable assurance that the DTRR will continue to be managed in a way that will cause no significant radiological risk to the health and safety of the public.

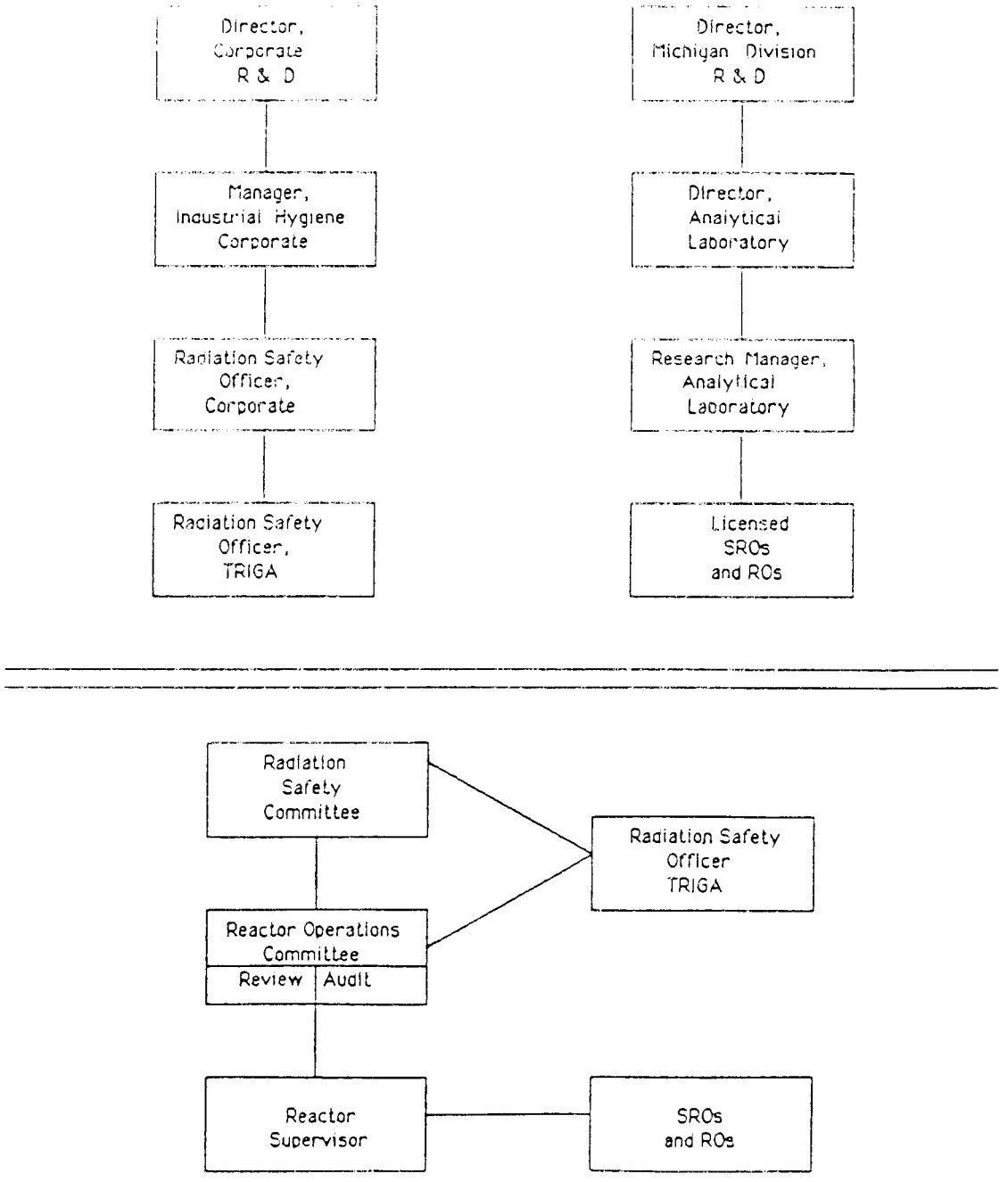

Figure 13.1 Organizational structure for DTRR operations
Source: Dow Chemical Company

14 ACCIDENT ANALYSIS

The staff has evaluated the documentation and analyses of potential site-specific events submitted by Dow Chemical Company. These analyses included the various types of possible accidents and the potential consequences to the public resulting from operation of the DTRR.

The following potential accidents or effects were considered sufficiently credible and were evaluated and analyzed:

(1) fuel-handling accident
(2) rapid insertion of reactivity (nuclear excursion)
(3) loss-of-coolant accident
(4) misplaced experiments
(5) mechanical rearrangement of the fuel
(6) effects of fuel aging

Of these potential events, the fuel-handling accident with the loss of cladding integrity of one irradiated fuel element in air in the reactor room would have the potential of releasing the highest level of radioactivity to the environment both inside and outside the DTRR facility. Thus, the fuel-handling accident will be designated as the maximum hypothetical accident (MHA). The results of the analyses of the other credible accidents with less severe consequences than those of the MHA are also addressed in the following sections.

14.1 Fuel-Handling Accident

This potential accident, designated as the MHA, includes various incidents involving one or more irradiated fuel elements in which the fuel cladding might be breached or ruptured. To remain conservative the staff did not try to develop a detailed scenario, but assumed the limiting scenario to be the complete cladding failure of one fuel element outside the reactor pool that instantly releases the volatile fission products that accumulated in the free volume (gap) between the fuel and the cladding.

Several series of experiments by the fuel vendor [GA Technologies, Incorporated (GA)] have provided data on the species and fractions of fission products released from U-ZrH_x under various conditions (Baldwin et al., 1980; Foushee, 1968; Foushee and Peters, 1971; Simnad, 1980; Simnad et al., 1976). The noble gases were the principal species found to be released. When the fuel specimens were irradiated at temperatures below 350°C, the fraction released could be summarized as a constant equal to 1.5×10^{-5}, independent of the temperature or operating history. GA accepts as reasonable the interpretation of these low-temperature results and concludes that the 1.5×10^{-5} release fraction reasonably could be applied to TRIGA reactors operating up to at least 800 kW. This release fraction is, thus, applicable to the 300-kW DTRR.

On the basis of the above discussion, the staff assumed a fission product release fraction of 1.5×10^{-5} of the total noble gas and halogen inventories for the

fuel-handling accident. On the basis of the GA analysis, this fraction is a conservative estimate of the potential release following prolonged operation at 300 kW with a maximum local fuel temperature of 260°C. Because the GA analysis assumes infinite operating time, this approach gives a conservatively high release value.

Since the noble gases do not condense or combine chemically, it is assumed that any noble gases released from the cladding will diffuse in air until radioactive decay has reduced the concentration to an insignificant value. Conversely, the iodines are chemically active but are not volatile at temperatures below approximately 180°C. Some of these radionuclides will be trapped by materials with which they come in contact, such as water and structures. Evidence indicates that most of the iodines either will not become or will not remain airborne under many accident scenarios that are applicable to non-power reactors (NUREG-0771; NUREG/CR-2079; Regulatory Guide 3.34). However, to be certain that the scenario involving the failure of fuel cladding leads to upper-limit dose estimates for all possible events, the staff assumed that 100 percent of the iodines in the gap became airborne. This assumption leads to computed thyroid doses that may be unrealistically high in many scenarios; for example, those in which the cladding failure occurs under water.

14.1.1 Scenario

The licensee and the staff analyzed similar scenarios that assumed that the cladding failure occurred in air and calculated subsequent doses to an individual in the reactor room and in the unrestricted area at the nearest fence line. It was assumed that the cladding failure occurred in a B-ring fuel element following an extended run at the authorized maximum power (300 kW) so that all fission products had reached their saturated activity levels. This is a conservative assumption considering the typical operating history at the DTRR facility. Normally, a significant amount of time elapses between reactor shutdown and the removal of any fuel from the reactor; however, it was assumed that all fission-product radionuclides were still at saturated activity levels at the time of release from the cladding. All the noble gases and halogens in the fuel cladding gap are assumed to be released instantaneously from the fuel element and distributed uniformly in the reactor room. Using the conservative estimate of the release fraction of 1.5×10^{-5}, this release is 21 μCi iodines, 27 μCi halogens, and 36 μCi noble gases. Scenarios incorporating more realistic estimates of the above conservative assumptions would reduce the computed doses significantly. However, using this scenario as a basis, the whole-body immersion dose (gamma-ray) and the potential thyroid dose from iodine inhalation were calculated for an individual in the reactor room (occupational) and in the unrestricted area immediately outside the nearest fence (public).

For the occupational exposure, it was assumed that the total release fraction of the maximum expected inventory of radioactive materials from one B-ring fuel element was instantly released and instantly mixed with the air in the 4600-ft^3 (1.3×10^8 cm^3) reactor room. It was also assumed that the ventilation system was in operation at the time of the accident, the core contained 78 elements, and the failed element developed a power level about 1.4 times as high as that of an average element. Because there is no credible way that the postulated maximum hypothetical accident could occur without operating personnel being alerted immediately, orderly evacuation of the reactor room would be accomplished within

1 minute. For the outside exposure, it was assumed that the unfiltered ventilation system was operating at its rated capacity of 1700 ft^3/min (8×10^5 cm^3/s). For the whole-body dose calculations, immersion in a semi-infinite cloud in both the reactor room and the unrestricted area outside the fence was assumed.

14.1.2 Assessment

The calculated doses for the above assumptions and locations are presented in Table 14.1. As a result of the extremely conservative calculational assumptions, the calculated operational and public doses shown in Table 14.1 are higher than those that could occur realistically.

On the basis of the above discussions and analysis, the staff concludes that if the maximally irradiated fuel rod from the DTRR were to release all of its noble gaseous and halogen fission products accumulated in the fuel cladding gap, radiation doses to both occupational personnel and to the public in unrestricted areas would be below the guideline values forming the bases of 10 CFR Part 20, Appendix B. Accordingly, the staff concludes that there is reasonable assurance that the postulated accident poses no significant radiological risk to the health and safety of the public or to the operational staff.

14.2 Rapid Insertion of Reactivity (Nuclear Excursion)

The U-ZrH_x fuel in the DTRR exhibits a strong, prompt, negative temperature coefficient of reactivity, as discussed in Section 4.5. This temperature coefficient acts to terminate a pulse or nuclear excursion by decreasing the reactivity as the temperature of the fuel increases. These results have been verified at many operating TRIGA reactors. Although it may be theoretically possible to rapidly insert sufficient excess reactivity to create an excursion where fuel damage would occur before the excursion could be terminated, the reactivity limits imposed by the Technical Specifications of the DTRR are intended to preclude such an event.

14.2.1 Scenario

The DTRR is not licensed or configured for pulse operation. However, since it is possible to induce a reactivity transient through failure of an experiment, the maximum postulated power excursion is the instantaneous insertion of the total available excess reactivity. However, the staff has not been able to identify a credible method for instantaneously inserting all of the available excess reactivity. The DTRR is limited by the Technical Specifications to 3.00$ (2.1% $\Delta k/k$) excess reactivity above a cold critical condition.

The staff has considered the scenario of the reactor operating at some power level between 0 and 300 kW, at which time all the remaining excess reactivity not compensated by the temperature coefficient is inserted rapidly into the core. The analysis neglected the reactivity loss as a result of xenon buildup. The staff determined that the worst case would be initiation of a maximum step insertion with the core at ambient temperature and essentially zero initial power. The licensee has reached a similar conclusion. The potential consequences of a reactivity insertion accident that were considered by the staff are melting of the fuel or cladding material, failure of the cladding as a result of high internal gas pressures, and phase changes in the fuel matrix.

The effects of fuel temperature may vary greatly depending on the type of moderator. For $ZrH_{1.1}$, a phase change great enough to cause cladding failure occurs at about 535°C (Simnad, 1980). $ZrH_{1.6-1.7}$, however, does not undergo a phase change even at temperatures above 2000°C. The limiting temperature for the higher hydride fuel elements is about 1175°C and is based on pressure build-up from the evolution of hydrogen.

Calculations performed by General Atomic and confirmed by experiments indicate that no fuel damage occurs at transient peak fuel temperatures as high as about 530°C for low-hydride-type ($U\text{-}Zrh_{1.0}$), aluminum-clad elements (Simnad, 1980) and 1175°C for high-hydride-type ($U\text{-}ZrH_{1.7}$), stainless-steel-clad fuel elements (Coffer et al., 1966; Simnad, 1980; Simnad et al., 1976).

The most limiting scenario for any TRIGA reactor containing aluminum-clad fuel is based on a core configuration with aluminum-clad elements loaded in the innermost (B) ring. If any excess reactivity were inserted, the maximum fuel temperature reached would be in the B-ring core positions. Although the licensee's analysis would support placement of the single aluminum-clad fuel element in the B ring, its placement is restricted by the Technical Specifications to the E or F rings to provide for extra safety margin.

The staff has reviewed the literature for large reactivity insertions into cores containing low-hydride, aluminum-clad elements and found that GA has performed experiments with 3.00$ step reactivity insertions in a TRIGA reactor core containing about 90 fuel elements. This amount of reactivity insertion yielded a reactor period of 4 ms, a peak power of about 700 MW, a total energy of 14 megawatt-seconds, and a measured peak fuel temperature of 475°C. The fuel temperature in the hottest core position was measured, and the fuel elements were examined after each step reactivity insertion (Hopkins et al., 1961). There was no indication of fuel or cladding melt or other distortion that might result from excessive internal gas pressure, and the maximum temperature never reached the phase transition value (about 530°C) for the low-hydride, aluminum-clad fuel elements (Simnad, 1980). Since the DTRR Technical Specifications will restrict placement of the single aluminum-clad fuel element to the E or F rings, the maximum temperature increase in this element in the extremely unlikely event of a 3.00$ reactivity insertion will be significantly below the above cited 475°C.

14.2.2 Assessment

Because of the design specifications for standard low-enriched $U\text{-}ZrH_x$ TRIGA fuel, the power and temperature characteristics are essentially independent of the hydride content. However, the low-hydride matrix exhibits phase transition at about 530°C, whereas the high-hydride matrix exhibited no phase transition in TRIGA tests at a temperature of about 1200°C. Therefore, in a mixed core, as long as the low-hydride, aluminum-clad fuel is operated in a temperature range of no damage, there will be a very large margin of safety against damage in the high-hydride, stainless-steel-clad fuel.

The analysis presented in Section 14.2.1 shows that, for the particular situation of a stepwise reactivity insertion accident of 3.00$ in the DTRR, the single

low-hydride, aluminum-clad fuel element could safely be placed in any core location, including the B ring. As stated above, the maximum observed (B-ring) fuel temperature for a 3.00$ insertion is 475°C, which is 55°C below the phase transition value of 530°C. Restricting the placement of this fuel element to the much cooler E or F rings, coupled with the fact that no credible mechanism has been identified to add the 3.00$ in a stepwise fashion to this nonpulsing TRIGA, provides reasonable assurance that operation of the DTRR with 3.00$ excess reactivity will not lead to any reactor condition that could result in a loss of cladding integrity or mechanical damage to the fuel.

On the basis of these considerations, the staff concludes that the rapid insertion into the DTRR core of the 3.00$ (2.10% $\Delta k/k$) available excess reactivity, even though a very unlikely occurrence, will not result in fuel melting or a cladding failure as a result of high temperature or high internal gas pressure. Therefore, there is reasonable assurance that the fission products contained in the fuel will not be released to the environment as a result of the rapid insertion of reactivity.

14.3 Loss-of-Coolant Accident

The rapid loss of shielding and cooling water immediately following reactor operation is a potential accident that would result in the increase of fuel and cladding temperatures. Because the water is required for moderation of neutrons, the loss of coolant in the reactor would terminate the neutron chain reaction and, thus, terminate the production of fission power. However, the residual radioactivity resulting from fission product decay would continue to deposit heat energy in the fuel and would constitute an unshielded radiation source in the bottom of the tank. Loss of water at the DTRR can occur through one of two possible mechanisms: the water may be pumped or siphoned from the tank, or a tank failure may allow the water to drain away.

Each pipe through which the water is pumped to the water treatment system and back into the pool is equipped with holes drilled through the piping at a level about 12 in. (30 cm) below the normal level of the water, or about 15 ft (4.6 m) above the top of the core. These holes serve to break any siphon action so that the pool cannot be drained below this level accidentally because of a malfunction in this system.

The aluminum tank liner was designed and thoroughly tested to ensure tightness against leakage. However, a large break in this tank and the associated concrete liner surrounding it, no matter how induced, could lead to leakage of water from the pool. The level of water in the pool would descend to the level of water in the surrounding soil (the water table). This would leave 6 ft or more (about 2 m) of water covering the core.

14.3.1 Scenario

The licensee analyzed the case of complete and instantaneous loss of coolant water at the DTRR as the limiting loss-of-coolant-accident event. It assumed the reactor had operated at a power of 300 kW for a time period sufficient to build up the maximum inventory of radioactive fission products, then the tank has lost all water instantly. The loss of moderator terminated the neutron

chain reaction, but fission product decay continued to heat the fuel. The licensee assumed that only the natural thermal convection of air up through the core would remove this decay heat.

Dose levels were calculated for two positions inside the reactor building: one directly over the tank about 18 ft (5.5 m) over the uncovered core and the other at the shielded top edge of the tank, which was shielded from the core by concrete but subject to scattered radiation. Time was measured from the cessation of 300-kW operation. The results of this study are presented in Table 14.2.

For persons outside the one-story reactor laboratory building, the radiation from the unshielded core could be collimated upward by the tank and shield structure and would not give rise to a public hazard.

Using very conservative assumptions, the licensee calculated a maximum fuel temperature of about 307°C that was reached in about an hour. At this fuel temperature, the changes in pressure inside the fuel cladding are caused by thermal expansion of any confined air and are small compared with the pressures at the temperatures discussed in Section 14.2.

14.3.2 Assessment

The staff has reviewed the licensee's analysis and concurs in the assumptions and methods. On the basis of the above considerations, the staff concludes that loss of coolant at the DTRR facility is a very unlikely event. However, should a loss-of-coolant accident occur, it would lead to no fuel damage or consequent release of radioactivity to the environment or undue radiation exposure of the public.

14.4 Misplaced Experiments

This type of potential accident is one in which an experimental sample or device inadvertently is located in an experimental facility where the irradiation conditions could exceed the design specifications. In that case, the sample might become overheated or develop pressures that could cause a failure of the experiment container. As discussed in Sections 10 and 13, all new experiments at the DTRR facility are reviewed before they are inserted, and all experiments in the region of the core are separated from the fuel cladding by at least one barrier, such as the pneumatic transfer and irradiation tubes, the central thimble, or the dummy fuel elements. Additionally, experiments that contain materials that could damage components of the reactor are required by the Technical Specifications to be doubly encapsulated.

The staff concludes that the experimental facilities and the procedures for review of experiments at the DTRR facility are adequate to provide reasonable assurance that failure of experiments is not likely, and even if failure occurred, breaching of the reactor fuel cladding would not occur. Furthermore, if an experiment should fail and release radioactivity within an experimental facility, there is reasonable assurance that the amount of radioactivity released to the environment would not be more than that of the proposed maximum hypothetical accident.

14.5 Mechanical Rearrangement of the Fuel

This type of potential accident would involve the failure of some reactor system, such as the support structure, or could involve an externally originated event that would result in damage to the fuel and in so doing would cause breaches of the cladding of one or more fuel elements and the release of fission products.

The staff has not developed an operational scenario for such accidents. However, it is conceivable that a heavy weight, such as a lead transfer cask, could be dropped on the reactor core from above and could smash the core in such a way as to cause breaches of the cladding of one or more fuel elements with consequent release of radioactive materials. Because of the dissolution of the halogens in the pool water, the staff concludes that the quantity of fission products released to the room air as a result of this accident would be lower than those released as a result of the fuel-handling accident (maximum hypothetical accident, MHA) evaluated in Section 14.1, even if more than a single fuel element should become damaged. Therefore, the staff concludes that there is reasonable assurance that no credible inadvertent mechanical rearrangement of fuel would result in an accident with more severe consequences to the public than the MHA.

14.6 Effects of Fuel Aging

The staff has included a discussion on the phenomenon of fuel aging for the purpose of addressing all credible effects that might contribute to the release of airborne radioactivity to unrestricted areas. However, fuel aging should be considered normal with reactor operation and is, in fact, expected to occur gradually. Reactions internal to the fuel cladding are discussed below.

There is evidence that the U-ZrH_x fuel tends to fragment with use, probably because of the stresses caused by high temperature gradients and the high heating rates during pulsing operations (Simnad, 1980; Simnad et al., 1976; West, 1970). Possible consequences of fragmentation include (1) a decrease in thermal conductivity across cracks leading to higher central fuel temperatures during operation and (2) an increase in the amount of fission product released into the cracks in the fuel. However, because the DTRR is not pulsed, the effects of fuel aging in the U-ZrH_x matrix associated with the thermal stresses resulting from pulsing are not expected to occur during normal operations.

Because pulsing is not allowed and because no known deterioration of the matrix occurs at the low operating temperatures at 300 kW, the detrimental effects of aging of the U-ZrH_x fuel moderator likely to occur in pulsing and/or higher powered TRIGA reactors will not have a significant effect on the operating temperature of the fuel or on the release of gaseous fission products in the DTRR. Therefore, the staff concludes that there is reasonable assurance that fuel aging will not significantly change the safety margins associated with continued use of the DTRR fuel.

14.7 Conclusion

The staff has evaluated the credible accidents for the DTRR based on an increase in the authorized maximum power from 100 to 300 kW and an increase in maximum excess reactivity from 2.00 to 3.00$ (1.4 to 2.1% $\Delta k/k$) and concludes that the

postulated accident with the greatest potential effect on the environment (the maximum hypothetical accident or MHA) is the fuel-handling accident that postulates the loss of cladding integrity of an irradiated fuel element in air in the reactor room. The analysis of this accident shows that if the cladding of one or more of the hottest fuel rods failed simultaneously instantly releasing all of the available fission products at their highest possible level into the air of the reactor room, the potential dose equivalents in unrestricted areas still would be below the guideline values of 10 CFR Part 20. Raising the core excess from 2.00 to 3.00$ (1.4 to 2.1% $\Delta k/k$) increases the severity of the consequences of adding this entire core excess in a stepwise fashion. However, as shown in Section 14.2, these higher consequences still pose no threat to fuel integrity. In fact, by restricting the placement of the single aluminum-clad fuel element to the E or F rings, the element would actually experience no more adverse consequences during a 3.00$ step than it would during the previously analyzed 2.00$ step, which allowed it to be located in the B ring. Even if the nearly incredible event were to occur and the aluminum-clad fuel element failed, the radiological consequences are enveloped by the MHA, which postulates the catastrophic cladding failure of a fuel element operating at a much higher power density and equilibrium fission product inventory.

Of the other accidents analyzed, the only one affected by the increased power and excess reactivity is the loss-of-coolant accident. As shown in Section 14.3, the probability of a loss-of-coolant accident is extremely remote and even if the accident should occur under the most pessimistic assumptions, the maximum fuel temperature reached would not lead to damage of the fuel cladding.

Therefore, the staff concludes that the design of the facility and the Technical Specifications provide reasonable assurance that the DTRR can be operated with a low probability of accidents and that even the maximum hypothetical accident will pose no significant risk to the health and safety of the public.

Table 14.1 Doses resulting from postulated fuel-handling accident

Exposure and location	Whole-body immersion dose (mrem)	Thyroid committed dose (mrem)
1-min (occupational) exposure in reactor room	1.65	750
1-hr (public) exposure immediately outside the restricted area	0.06	23.0

Table 14.2 Radiation doses from uncovered core at DTRR following the maximum loss-of-coolant accident

Time	Direct radiation - 18 ft directly over the core (R/h)	Indirect radiation - shield top edge of tank (R/h)
10 seconds	3000	0.78
1 day	360	0.090
1 week	130	0.042
1 month	35	0.012

15 TECHNICAL SPECIFICATIONS

The staff has evaluated the licensee's Technical Specifications in this licensing action. These Technical Specifications define certain features, characteristics, and conditions governing the operation of the DTRR facility and are explicitly included in the renewal license as Appendix A. The staff has reviewed the format and contents of the Technical Specifications using ANSI/ANS 15.1-1982, "Standard for the Development of Technical Specifications for Research Reactors," as a guide.

On the basis of its review, the staff finds the Technical Specifications acceptable and concludes that normal plant operation within the limits of the Technical Specifications will not result in offsite radiation exposures in excess of 10 CFR Part 20 guidelines. Furthermore, the limiting conditions for operation and surveillance requirements will limit the likelihood of malfunctions and mitigate the consequences to the public of off-normal or accident events.

16 FINANCIAL QUALIFICATIONS

Financial information for the Dow Chemical Company was provided in the renewal application of November 14, 1986.

The Dow Chemical Company is a multibillion-dollar diversified manufacturer of basic chemicals and plastics and specialty products and services.

The staff reviewed the financial status of the Dow Chemical Company and concludes that funds will be made available to support continued operations and, when necessary, to shut down the facility and carry out decommissioning activities. The financial status is in accordance with the requirements of 10 CFR 50.33(f). Therefore, the staff concludes that the Dow Chemical Company's financial qualifications are acceptable.

17 OTHER LICENSE CONSIDERATIONS

17.1 Prior Reactor Utilization

In the previous sections of this SER, the staff concluded that the risk of radiation exposure to the public as a result of the normal operation of the reactor is insignificant and that only an off-normal or accident event could cause some measurable exposure. The maximum hypothetical accident (MHA) was shown to result in potential radiation exposures within the applicable guideline values of 10 CFR Part 20.

The staff concluded that the reactor was initially designed and constructed to operate safely. During the review for license renewal, the staff considered whether prior operation would cause significant degradation of the capability of components and systems to continue to perform their safety functions. Because fuel cladding is the component most responsible for preventing release of fission products to the environment, possible mechanisms that could lead to detrimental changes in its integrity were considered. Prominent among the considerations were the following: (1) radiation degradation of cladding integrity, (2) high fuel temperature or temperature cycling leading to changes in the mechanical properties of the cladding, (3) corrosion or erosion of the cladding leading to thinning or other weakening, (4) mechanical damage resulting from handling or experimental use, and (5) degradation of safety components or systems. The effects of fuel aging are discussed in Section 14.6 of this SER.

The staff's conclusions regarding these parameters, in the order in which they were identified above, are:

(1) Nearly identical fuel has been laboratory tested elsewhere and has been exposed in similar irradiations to higher total radiation doses in operating reactors, such as at General Atomics and the University of Illinois. No significant degradation of cladding has resulted in any of these reactors.

(2) The power density, coolant flow rates, and maximum temperatures reached in the DTRR fuel are below similar parameters in some other non-power reactors using similar fuel. No damage has occurred during normal operations in any of these reactors.

(3) Water flow through the core is obtained by natural thermal convection. Therefore, erosion effects that might result from high flow velocity will be negligible. Corrosion is kept to a minimum by careful control of the conductivity of the primary coolant.

(4) The fuel is handled as infrequently as possible, consistent with required surveillance and experimental program requirements. Any indications of possible damage or degradation are investigated promptly, and damaged fuel will be removed from service in accordance with the Technical Specifications. All experiments placed near the core are isolated from the fuel cladding by a water gap and at least one barrier of encapsulation.

(5) The DTRR staff performs regular preventive and corrective maintenance and replaces components as necessary. Nevertheless, some malfunctions of equipment have occurred. The staff review, however, indicates that most of these malfunctions have been one-of-a-kind incidents. There is no indication of significant degradation of the instrumentation, and there is strong evidence that any future degradation will lead to prompt remedial action by the DTRR staff. Therefore, there is reasonable assurance that there will be no significant increase in the likelihood of a reactor accident occurring as a result of component malfunction.

17.2 Conclusion

In addition to the considerations above, the staff has reviewed event reports from the licensee and inspection reports and informal comments from the NRC regional office. On the basis of this review, the staff concludes that there has been no significant degradation of equipment and that facility management will continue to maintain and operate the reactor so that there is no significant increase in the radiological risk to the employees or the public.

18 CONCLUSIONS

On the basis of its evaluation of the application as set forth in the previous sections, the staff has determined the following:

(1) The application for renewal at an increased operating power level of Operating License R-108 for its research reactor filed by the Dow Chemical Company, dated November 14, 1986, as supplemented, complies with the requirements of the Atomic Energy Act of 1954, as amended (the Act), and the Commission's regulations set forth in 10 CFR Chapter I.

(2) The facility will operate in conformity with the application as amended, the provisions of the Act, and the rules and regulations of the Commission.

(3) There is reasonable assurance (a) that the activities authorized by the operating license can be conducted without endangering the health and safety of the public and (b) that such activities will be conducted in compliance with the regulations of the Commission set forth in 10 CFR Chapter I.

(4) The licensee is technically and financially qualified to engage in the activities authorized by the license in accordance with the regulations of the Commission set forth in 10 CFR Chapter I.

(5) The renewal of this license will not be inimical to the common defense and security or to the health and safety of the public.

19 BIBLIOGRAPHY

American National Standards Institute/American Nuclear Society, ANSI/ANS 15.1, "Standard for the Development of Technical Specifications for Research Reactors," La Grange Park, Illinois, 1982.

---, ANSI/ANS 15.11, "Radiological Control at Research Reactor Facilities," La Grange Park, Illinois, 1987.

---, ANSI/ANS 15.4, "Selection and Training of Personnel for Research Reactors," La Grange Park, Illinois, 1977.

Baldwin, N. L., F. C. Foushee, and J. S. Greenwood, "Fission Product Release From TRIGA-LEU Reactor Fuels," Seventh Biennial TRIGA User's Conference, San Diego, California, March 2-5, 1980.

Code of Federal Regulations, Title 10, "Energy," U.S. Government Printing Office, Washington, D.C., revised annually.

Coffer, C. O., J. R. Shoptaugh, Jr., and W. L. Whittemore, "Stability of U-ZrH TRIGA Fuel Subjected to Large Reactivity Insertion," General Atomic Report GA-6874, San Diego, California, January 1966 [transmitted by letter dated July 25, 1967 (Docket 50-163)].

Dow Chemical Company, "SAR for the Dow TRIGA Research Reactor," Docket 50-264, 1986.

---, "Technical Specifications for the Dow TRIGA Research Reactor," Docket 50-264, 1988.

Foushee, F. C., "Release of Rare Gas Fission Products From U-ZrH Fuel Material," Gulf General Atomic Incorporated Report GA-8597, San Diego, California, March 1968.

---, and R. H. Peters, "Summary of TRIGA Fuel Fission Product Release Experiments," Gulf Energy and Environmental Systems, Inc. Report Gulf-EES-A10801, San Diego, California, September 1971.

Hopkins, G. R., et al., "TRIGA Fuel-Element Development Tests," General Atomic Company Report GA-1966, San Diego, California, March 10, 1961.

Merten, U., R. S. Stone, and W. P. Wallace, "Uranium-Zirconium Hydride Fuel Elements," in Nuclear Fuel Elements, H. H. Housner and J. F. Schuman, Eds., Reinhold Publishing Co., New York, 1959.

Simnad, M. T., "The U-ZrH_x Alloy: Its Properties and Use in TRIGA Fuel," General Atomic Report GA-4314, E-117-833, San Diego, California, February 1980.

---, F. C. Foushee, and G. B. West, "Fuel Elements for Pulsed TRIGA Research Reactors," Nuclear Technology, 28: 31-56, 1976.

Stover, C. W., B. G. Reagor, and S. T. Algermissen, "Seismicity Map of the State of Michigan," U.S. Geological Survey, Reston, Virginia, 1980.

U. S. Nuclear Regulatory Commission, NUREG-0771, "Regulatory Impact of Nuclear Reactor Accident Source Term Assumptions," for comment, June 1981.

---, NUREG/CR-2079, "Analysis of Credible Accidents for Argonaut Reactors," S. C. Hawley, R. L. Kathren, and M. A. Robkin, Battelle Pacific Northwest Laboratories, 1981.

---, NUREG/CR-2387, "General Credible Accident Analysis for TRIGA Fueled Reactors," S. C. Hawley and R. L. Kathren, Battelle Pacific Northwest Laboratories, 1982.

---, Regulatory Guide 1.109, "Calculation of Annual Doses to Man From Routine Releases of Reactor Effluents for the Purpose of Evaluating Compliance With 10 CFR Part 50, Appendix I," Revision 1, October 1977.

---, Regulatory Guide 3.34, "Assumptions Used for Evaluating the Potential Radiological Consequences of Accidental Nuclear Criticality in a Uranium Fuel Fabrication Plant," Revision 1, July 1979.

West, G. B., "Safety Analysis Report for the Torrey Pines TRIGA Mark III Reactor," General Atomic Report GA-9064, San Diego, California, January 5, 1970 [transmitted by letter dated January 29, 1970 (Docket 50-227)].