Facility: Hope Creek

Vendor: GE

Exam Date: 2012

Exam Type: RO

Examination Outline Cross-reference:	Level	RO	SRO
	Tier #	2	
	Group #	1	
	K/A #	264000 K1.05	
	Importance Rating	3.2	

Knowledge of the physical connections and/or cause- effect relationships between EMERGENCY GENERATORS (DIESEL/JET) and the following: Emergency generator fuel oil supply system

Question: RO #1

While monitoring the monthly surveillance run of the A EDG on 102', you discover a significant leak on the discharge piping of the fuel oil supply header, spraying onto the engine.

What action must be taken to shut down the EDG AND MINIMIZE the fuel oil leak to prevent a possible fire/explosion?

A. Have the Control Room unload the EDG and perform normal 10 minute cooldown and then open power supply breaker to the Standby Fuel Oil (AP402) Pump.

B. Push the STOP pushbutton on the 1AC421 Panel and then open the power supply breaker to the Standby Fuel Oil (AP402) Pump.

C. Push either one of the Emergency STOP pushbuttons on the 1AC421 Panel.

D. Push both of the Emergency STOP pushbuttons on the 1AC421 Panel.

Proposed Answer: D

Explanation (Optional):

A: Have the Control Room unload the EDG and perform normal 10 minute cooldown and then open power supply breaker to the Standby Fuel Oil (AP402) Pump. **INCORRECT:** This will NOT immediately stop the standby fuel oil pump and will allow additional fuel oil to be deposited on the engine/floor. To open the breaker will require exiting the engine room and going up to 130' to MCC 52-411

B: Push the STOP pushbutton on the 1AC421 Panel and then open the power supply breaker to the Standby Fuel Oil (AP402) Pump. **INCORRECT:** This will stop the engine but will NOT immediately stop the standby fuel oil pump and will allow additional fuel oil to be deposited on the engine/floor. To open the breaker will require exiting the engine room and going up to 130' to MCC 52-411

C: Push either one of the Emergency STOP pushbuttons on the 1AC421 Panel. **INCORRECT:** Depressing either Emergency STOP pushbutton will have no effect on the shutdown of the standbyfuel oil pump, BOTH buttons are required to be depressed simultaneously

D: Push both of the Emergency STOP pushbuttons on the 1AC421 Panel **CORRECT:** Depressing both Emergency STOP pushbuttons simultaneously will shutdown (lockout) all of the engine mounted equipment, including the standby fuel oil pump (AP402) which discharges to the fuel oil header, limiting fuel oil discharge from the header

Technical Reference(s): NOH04EDG000C, page 55 rev 02 (Attach if not previously provided)

Proposed References to be provided to applicants during examination: none

Learning Objective: EDG000E016, Given plant conditions resulting in a diesel engine shutdown, summarize/identify the automatic actions which occur when diesel speed decreases below 125 rpm.

Question Source: Bank #

Modified Bank # (Note changes or attach parent)

New X

Question History:

Question Cognitive Level: Memory or Fundamental Knowledge

Comprehension or Analysis X

10 CFR Part 55 Content: 55.41 7

55.43

Comments:

Facility: Hope Creek

Vendor: GE

Exam Date: 2012

Exam Type: RO

Examination Outline Cross-reference:	Level	RO	SRO
	Tier #	2	
	Group #	1	
	K/A #	211000 K1.01	
	Importance Rating	3.0	

Knowledge of the physical connections and/or cause- effect relationships between STANDBY LIQUID CONTROL SYSTEM and the following: Core spray line break detection: Plant-Specific

Question: RO #2

An ATWS has been in progress for roughly ten (10) minutes

Then:

OHA B3-B5 CORE SPRAY LINE BREAK is received;

A control panel walk-down reveals:

- Core Spray Loop A flow is 0 gpm
- Core Spray Loop B flow is 0 gpm
- HPCI Injection flow is 0 gpm
- RCIC Injection flow is 600 gpm

What caused the overhead alarm to be received?

A. RCIC Injection

B. SLC Injection

C. Core Spray Loop A Inboard Injection valve (F005A) leakage

D. Core Spray Loop B Inboard Injection valve (F005B) leakage

Proposed Answer: B

Explanation (Optional):

A: RCIC Injection, **INCORRECT:** RCIC has no direct interface with the Core Spray system

B: SLC Injection, **CORRECT:** The SLC system injects into the "A" Core Spray sparger and due to the arrangement of the Δp cell for the leak detection instrumentation, the OHA B3-B5 will be received during a SLC initiation.

C: Core Spray Loop Inboard Injection valve (F005A) leakage, **INCORRECT:** Due to the arrangement of the Δp cell for the leak detection instrumentation only a leak downstream of the F006A/B check valves would be detected. The F005A is upstream prior to reaching the check valve.

D: Core Spray Loop Inboard Injection valve (F005B) leakage **INCORRECT:** Due to the arrangement of the Δp cell for the leak detection instrumentation only a leak downstream of the F006A/B check valves would be detected. The F005B is upstream prior to reaching the check valve.

Technical Reference(s): NOH01SLCYSC (Attach if not previously provided)
NOH01CSSYS0C page 14/22/23

Proposed References to be provided to applicants during examination: none

Learning Objective: SLCSYSE004 Given plant conditions, summarize/identify the interrelationship between the following Systems and the Standby Liquid Control System.
b. Core Spray (As available)

Question Source: Bank #

Modified Bank # (Note changes or attach parent)

New X

Question History:

Question Cognitive Level: Memory or Fundamental Knowledge

Comprehension or Analysis X

10 CFR Part 55 Content: 55.41 6

55.43

Comments:

Facility: Hope Creek

Vendor: GE

Exam Date: 2012

Exam Type: RO

Examination Outline Cross-reference:	Level	RO	SRO
	Tier #	2	
	Group #	1	
	K/A #	239002 K2.01	
	Importance Rating	2.8	

Knowledge of electrical power supplies to the following: SRV solenoids

Question: RO #3

The plant is at rated power when several overhead alarms are received in the main Control Room.

A field report from the Aux Building Equipment Operator is that the 10D440 125 VDC bus has been damaged and de-energized.

How does this affect (if any) the ability to use the ADS SRVs?

A. "A" (B logic) pilot solenoids ONLY will lose actuator power

B. "B" (D logic) pilot solenoids ONLY will lose actuator power

C. Both "A" AND "B" (B AND D logic) pilot solenoids will lose actuator power

D. Neither "A" NOR "B" (B NOR D logic) pilot solenoids will lose actuator power

Proposed Answer: B

Explanation (Optional):

A: "A" pilot solenoids ONLY will lose actuator power, **INCORRECT**; ADS valves "A" only, pilot solenoids are powered from "B" channel 125 VDC 1BD417, which is fed from 10D420 125 VDC Unit Sub-Station.

B: "B" pilot solenoids ONLY will lose actuator power, **CORRECT**; ADS valves "B" only, pilot solenoids are powered from D channel 125 VDC 1DD417, which is fed from 10D440 125 VDC Unit Sub-Station.

C: Both "A" AND "B" pilot solenoids will lose actuator power **,INCORRECT**; ADS valves "B" only, pilot solenoids are powered from D channel 125 VDC 1DD417, which is fed from 10D440 125 VDC Unit Sub-Station. ADS valves "A" only, pilot solenoids are powered from "B" channel 125 VDC 1BD417, which is fed from 10D420 125 VDC Unit Sub-Station.

D: Neither "A" NOR "B" pilot solenoids will lose actuator power **, INCORRECT**; ADS valves "B" only, pilot solenoids are powered from D channel 125 VDC 1DD417, which is fed from 10D440 125 VDC Unit Sub-Station. ADS valves "A" only, pilot solenoids are powered from "B" channel 125 VDC 1BD417, which is fed from 10D420 125 VDC Unit Sub-Station.

Technical Reference(s): NOH04ADSSYSC (Attach if not previously provided)

Proposed References to be provided to applicants during examination: none

Learning Objective: ADSSYSE07, From memory, evaluate the interrelationship between the Automatic Depressurization System and the following, IAW available Control Room references: 125 VDC Class 1E Distribution System (As available)

Question Source: Bank # 56198

Modified Bank # (Note changes or attach parent)

New

Question History: Audit 1999

Question Cognitive Level: Memory or Fundamental Knowledge

Comprehension or Analysis X

10 CFR Part 55 Content: 55.41 7

55.43

Comments:

Facility: Hope Creek

Vendor: GE

Exam Date: 2012

Exam Type: RO

Examination Outline Cross-reference:	Level	RO	SRO
	Tier #	2	
	Group #	1	
	K/A #	218000 K3.02	
	Importance Rating	4.5	

Knowledge of the effect that a loss or malfunction of the AUTOMATIC DEPRESSURIZATION SYSTEM will have on the following: Ability to rapidly depressurize the reactor

Question: RO #4

An Emergency Depressurization is required per EOP-101.

Due a malfunction with the SRV control logic, all of the SRVs are NOT available to be opened.

Which of the following is the MINIMUM number of Safety Relief Valves (SRV) that must be opened during an Emergency Depressurization and the reason for that minimum number?

A. 4 SRVs will remove all decay heat from the core at a pressure sufficiently low that the ECCS with the lowest head will be capable of making up the SRV steam flow.

B. 4 SRVs provide the minimum depressurization rate required to ensure the low pressure ECCS systems inject soon enough to minimize the amount of time water level is below the top of active fuel.

C. 5 SRVs will remove all decay heat from the core at a pressure sufficiently low that the ECCS with the lowest head will be capable of making up the SRV steam flow.

D. 5 SRVs provide the minimum depressurization rate required to ensure the low pressure ECCS systems inject soon enough to minimize the amount of time water level is below the top of active fuel.

Proposed Answer: C

Explanation (Optional):

A: 4 SRVs will remove all decay heat from the core at a pressure sufficiently low that the ECCS with the lowest head will be capable of making up the SRV steam flow. **INCORRECT,** not sufficient IAW EPG/SAG calculations for Hope Creek Station

B: 4 SRVs provide the minimum depressurization rate required to ensure the low pressure ECCS systems inject soon enough to minimize the amount of time water level is below the top of active

fuel. **INCORRECT,** not sufficient IAW EPG/SAG calculations for Hope Creek Station

C: 5 SRVs will remove all decay heat from the core at a pressure sufficiently low that the ECCS with the lowest head will be capable of making up the SRV steam flow. **CORRECT** HC.OP-EO.ZZ-0202, Step ED-9 Bases, Minimum Number of SRVs required for ED - [Reference EPG/SAG Appendix B section 17.22] - The Minimum Number of SRVs Required for Emergency Depressurization (MNSRED) is the least number of SRVs which corresponds to a Minimum Steam Cooling Pressure (MSCP) sufficiently low that the ECCS with the lowest head will be capable of making up the SRV steam flow at the corresponding MSCP. The MNSRED is utilized to ensure the RPV will depressurize and remain depressurized when emergency depressurization is required.

D: 5 SRVs provide the minimum depressurization rate required to ensure the low pressure ECCS systems inject soon enough to minimize the amount of time water level is below the top of active fuel. **INCORRECT,** not sufficient IAW EPG/SAG calculations for Hope Creek Station

Technical Reference(s): EOP-202, ED-9 Bases, Minimum Number of SRVs required for ED - [Reference EPG/SAG Appendix B section 17.22] (Attach if not previously provided)

Proposed References to be provided to applicants during examination: none

Learning Objective: EOP202E003, Given any step of the procedure, describe the reason for performance of that step and/or expected system response to control manipulations prescribed by that step. (As available)

Question Source: Bank # 53392

Modified Bank # (Note changes or attach parent)

New

Question History:

Question Cognitive Level: Memory or Fundamental Knowledge X

Comprehension or Analysis

10 CFR Part 55 Content: 55.41 7

55.43

Comments:

Facility: Hope Creek

Vendor: GE

Exam Date: 2012

Exam Type: RO

Examination Outline Cross-reference:	Level	RO	SRO
	Tier #	2	
	Group #	1	
	K/A #	262001 K3.01	
	Importance Rating	3.5	

Knowledge of the effect that a loss or malfunction of the A.C. ELECTRICAL DISTRIBUTION will have on following: Major System Loads

Question: RO #5

Given:

- All Circulating Water pumps are running
- All Circulation Water pump discharge valves (HV-2152A-D) are OPEN FULL

THEN, power is lost to Bus 10A502

Subsequently, power to 10A502 is restored.

One minute later, what is the Circulating Water system configuration?
(Assume NO operator actions are performed on the circulating water system)

A. AP501 and CP501 are running, HV-2152A and HV-2152C are in the OPEN FULL position

B. AP501 and CP501 are running, HV-2152A and HV-2152C are in the OPEN/CL MID position

C. BP501 and DP501 are running, HV-2152B and HV-2152D are in the OPEN FULL position

D. BP501 and DP501 are running, HV-2152B and HV-2152D are in the OPEN/CL MID position

Proposed Answer: B

Explanation (Optional):

A: AP501 and CP501 are running, HV-2152A and HV-2152C are in the fully OPEN position, **INCORRECT**, In the event of a loss of a 10A502 bus power failure, power is lost to all of the circulating water pump HPUs and circulating water pumps B & D. B & D circulating water pump discharge valves fully shut and initially the A & C discharge valves remain as is. When power is subsequently restored A &C discharge valves move to the OPEN MID position.

B: AP501 and CP501 are running, HV-2152A and HV-2152C are in the OPEN MID position, **CORRECT,** In the event of a loss of a 10A502 bus power failure, power is lost to all of the circulating water pump HPUs and circulating water pumps B & D. B & D circulating water pump discharge valves fully shut and initially the A & C discharge valves remain as is. When power is subsequently restored A &C discharge valves move to the OPEN MID position.

C: BP501 and DP501 are running, HV-2152B and HV-2152D are in the fully OPEN position, **INCORRECT,** In the event of a loss of a 10A502 bus power failure, power is lost to all of the circulating water pump HPUs and circulating water pumps B & D. B & D circulating water pump discharge valves fully shut and initially the A & C discharge valves remain as is. When power is subsequently restored A &C discharge valves move to the OPEN MID position.

D: BP501 and DP501 are running, HV-2152B and HV-2152D are in the OPEN MID position, **INCORRECT,** In the event of a loss of a 10A502 bus power failure, power is lost to all of the circulating water pump HPUs and circulating water pumps B & D. B & D circulating water pump discharge valves fully shut and initially the A & C discharge valves remain as is. When power is subsequently restored A &C discharge valves move to the OPEN MID position.

Technical Reference(s): OP-SO.DA-0001 Sect 3.3.9 (Attach if not previously provided)

Proposed References to be provided to applicants during examination: none

Learning Objective: CIRCWAE005, Given procedure HC.OP-SO.DA-0001, Circulating Water System Operation, explain the bases for the precautions and limitations IAW HC.OP-SO.DA-0001. (As available)

Question Source: Bank # 56919

Modified Bank # (Note changes or attach parent)

New

Question History:

Question Cognitive Level: Memory or Fundamental Knowledge

Comprehension or Analysis X

10 CFR Part 55 Content: 55.41 7

55.43

Comments:

Facility: Hope Creek

Vendor: GE

Exam Date: 2012

Exam Type: RO

Examination Outline Cross-reference:	Level	RO	SRO
	Tier #	2	
	Group #	1	
	K/A #	206000 K3.01	
	Importance Rating	4.0	

Knowledge of the effect that a loss or malfunction of the HIGH PRESSURE COOLANT INJECTION SYSTEM will have on following: Reactor water level control: BWR-2,3,4

Question: RO #6

A reactor level transient occurs scramming the plant:

- HPCI starts to allow for injection to the vessel
- RCIC is C/T for maintenance
- RPV level starts to increase
- The HPCI Aux Oil Pump seizes as the HPCI turbine nears rated speed
- RPV level swells up to 58"

Subsequently, RPV level then drops to -40"

With NO operator action, what is the response of HPCI and reactor vessel water level?

A. HPCI will trip when the Aux Oil Pump seizes and will NOT restart and vessel level will lower.

B. HPCI will trip on High Level and will restart on low level to restore vessel level.

C. HPCI will trip on High Level and will NOT restart and vessel level will lower.

D. HPCI will remain running throughout these events and vessel level will be restored.

Proposed Answer: C

Explanation (Optional):

A: HPCI will trip when the Aux Oil Pump trips and will not restart and vessel level will lower. **INCORRECT**, when sufficient oil pressure has been developed by the shaft driven oil pump, the Aux oil pump would normally be cycled off, as speed reaches 1450-1650 rpm. At rated speed (≈ 4150 rpm) the Aux oil pump will not be running

B: HPCI will trip on High Level and will restart on low level to restore vessel level. **INCORRECT,** level 8 (+54") will cause HPCI to trip, however the Aux Oil pump is needed to allow pump to initially come up to speed until the shaft driven oil pump takes over (1450-1650 rpm). With a seized Aux Oil pump there is no oil pressure to get the turbine steam supply valves (FV-4879 and FV-4880) opened.

C: HPCI will trip on High Level and will not restart and vessel level will lower. **CORRECT,** level 8 (+54") will cause HPCI to trip and the Aux Oil pump is needed to allow pump to initially come up to speed until the shaft driven oil pump takes over (1450-1650 rpm). With a seized Aux Oil pump there is no oil pressure to get the turbine steam supply valves (FV-4879 and FV-4880) opened.

D: HPCI will remain running throughout these events and vessel level will be restored. **INCORRECT,** level 8 (+54") will cause HPCI to trip and the Aux Oil pump is needed to allow pump to initially come up to speed until the shaft driven oil pump takes over (1450-1650 rpm). With a seized Aux Oil pump there is no oil pressure to get the turbine steam supply valves (FV-4879 and FV-4880) opened.

Technical Reference(s): OP-SO.BJ-0001, pages 11, 15 (Attach if not previously provided)

Proposed References to be provided to applicants during examination: none

Learning Objective: HPCI00E010, Given plant conditions, determine the sequence of events following receipt of a HPCI turbine trip signal IAW control room references (As available)

Question Source: Bank #

Modified Bank # 55744 (Note changes or attach parent)

New

Question History: NRC 10/99

Question Cognitive Level: Memory or Fundamental Knowledge

Comprehension or Analysis X

10 CFR Part 55 Content: 55.41 8

55.43

Comments:

Facility: Hope Creek

Vendor: GE

Exam Date: 2012

Exam Type: RO

Examination Outline Cross-reference:	Level	RO	SRO
	Tier #	2	
	Group #	1	
	K/A #	205000 K4.03	
	Importance Rating	3.8	

Knowledge of SHUTDOWN COOLING SYSTEM (RHR SHUTDOWN COOLING MODE) design feature(s) and/or interlocks which provide for the following: Low reactor water level: Plant-Specific

Question: RO #7

The plant is shutdown and preparing to place "B" Loop of RHR in Shutdown Cooling.

While placing Shutdown Cooling in service, which one of the lists below contains ONLY valves that have interlocks to prevent draining the Reactor Vessel?

A. HV-F004B (RHR pump torus suction - LPCI mode) and HV-F007B (RHR pump Minimum Flow Valve)

B. HV-F008 (RHR Shutdown Cooling Suction Valve) and HV-F017B (RHR LPCI Injection Valve)

C. HV-F016B (RHR Containment Spray Outboard Valve) and HV-F021B (RHR Containment Spray Inboard Valve)

D. HV-F024B (RHR Loop B Test Return Valve) and BC-HV-F027B (Torus Spray Valve)

Proposed Answer: D

Explanation (Optional):

A: BC-HV-F004B (RHR pump torus suction - LPCI mode) BC-HV-F007B (RHR pump Minimum Flow Valve) **INCORRECT**, while the F004 is interlocked to prevent being opened simultaneously with the F006, the F007 is not interlocked to prevent vessel drain down during SDC operations

B: BC-HV-F008B (RHR Shutdown Cooling Suction Valve) BC-HV-F017B (RHR LPCI Injection Valve) **INCORRECT,** while the F008 is NOT interlocked to prevent a drain down, however it will isolate on a low RPV level @ 12.5", the F017 is not interlocked to prevent vessel drain down, but interlocked to prevent opening above RPV pressure of 450 psig and an LPCI initiation signal present

C: BC-HV-F016B (RHR Containment Spray Outboard Valve) BC-HV-F021B (RHR Containment Spray Inboard Valve) **INCORRECT**, the F016 and F021 are not interlocked to prevent vessel

drain down, but interlocked to allow both valves to be opened only with: a LPCI initiation signal present and High drywell pressure and its respective LPCI injection valve HV-F017A(B) 100% CLOSED.

D: BC-HV-F024B (RHR Loop B Test Return Valve) BC-HV-F027B (Torus Spray Valve) **CORRECT,** both the F024 and 27 as well as the F004 all must be closed to allow for the HV-F006 to be opened for Shutdown Cooling, this prevents a vessel drain down.

Technical Reference(s): OP.SO.BC-001/002 (Attach if not previously provided)

Proposed References to be provided to applicants during examination: none

Learning Objective: RHRSYSE006, Concerning the interlocks associated with the shutdown cooling suction valves (F006A/B) and the Torus suction (F004A/B), pump test return (F024A/B), and Torus spray isolation (F027A/B) valves. a. Summarize the bases for the interlocks, IAW available control room references. (As available)

Question Source: Bank # 53709

Modified Bank # (Note changes or attach parent)

New

Question History:

Question Cognitive Level: Memory or Fundamental Knowledge X

Comprehension or Analysis

10 CFR Part 55 Content: 55.41 7

55.43

Comments:

Facility: Hope Creek

Vendor: GE

Exam Date: 2012

Exam Type: RO

Examination Outline Cross-reference:	Level	RO	SRO
	Tier #	2	
	Group #	1	
	K/A #	262002 K4.01	
	Importance Rating	3.1	

Knowledge of UNINTERRUPTABLE POWER SUPPLY (A.C./D.C.) design feature(s) and/or interlocks which provide for the following: Transfer from preferred power to alternate power supplies

Question: RO #8

Given:

- A refueling outage is in progress
- 10A401 4KV 1E bus is de-energized for pre-planned maintenance.
- The operator places the 1AD481 inverter Manual Bypass Control Switch from "NORM" to the "ISOLATE ALTERNATE" position.

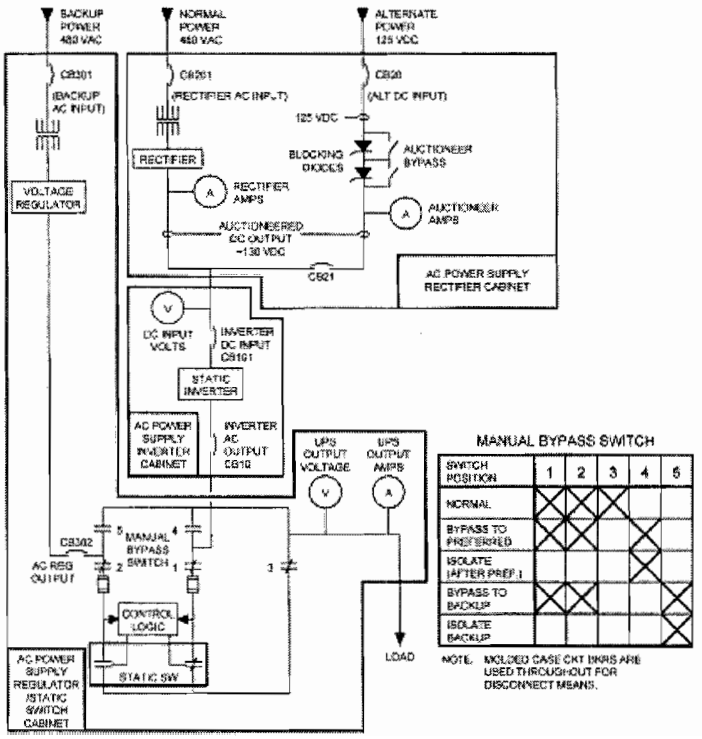

SELECT the effect this will have on the power supply to the load (1AJ481).

A. Normal power 480 VAC will supply power to the load.

B. Alternate power 125 VDC will supply power to the load.

C. Backup power 480 VAC will supply power to the load.

D. NO power will be supplied to the load.

Proposed Answer: D

Explanation (Optional):

A: Normal power 480 VAC will supply power to the load. **INCORRECT,** Normal 480 VAC is not available because 10A401 is de-energized and contacts 3 and 4 are open.

B: Alternate power 125 VDC will supply power to the load. **INCORRECT,** Contacts 1, 2, 3, and 4 are open. No possible way to provide output from the inverter.

C: Backup power 480 VAC will supply power to the load. **INCORRECT,** 10A401 bus is de-energized which is the source of Back-up AC.

D: NO power will be supplied to the load. **CORRECT,** Exhibit 2 of SO-PN-0001 shows that in Isolate after Alt, that the static switch output will be disconnected from the load (contact 3 open), and the supply from Backup 480 will be connected to the load (contact 5 closed and 4 is open) However with 10A401>10B411-33, Backup 480 for AJ481 is de-energized.

Technical Reference(s): NOH01EAC00 (Attach if not previously provided)

Proposed References to be provided to applicants during examination: none

Learning Objective: 1EAC00E024 Provided a drawing of the UPS: (Figs. 6,7,8) c. Predict the response caused by operating the manual bypass switch IAW Att. 2 of the Lesson Plan. (As available)

Question Source: Bank # 53942

Modified Bank # (Note changes or attach parent)

New

Question History:

Question Cognitive Level: Memory or Fundamental Knowledge

	Comprehension or Analysis		X
10 CFR Part 55 Content:	55.41	7	
	55.43		

Comments:

Facility: Hope Creek

Vendor: GE

Exam Date: 2012

Exam Type: RO

Examination Outline Cross-reference:	Level	RO	SRO
	Tier #	2	
	Group #	1	
	K/A #	300000 K5.01	
	Importance Rating	2.5	

Knowledge of the operational implications of the following concepts as they apply to the INSTRUMENT AIR SYSTEM: Air compressors

Question: RO #9

Given:

- A loss of coolant accident has occurred.
- The Reactor Auxiliaries Cooling System (RACS) has been restored.

Which of the following describes the availability/response of the Emergency Instrument Air Compressor (EIAC) for these conditions should instrument air header pressure drop to 83 psig?

A. The EIAC will automatically start if the LOCA signal is cleared.

B. The EIAC is NOT available until the Non-1E breaker is closed.

C. The EIAC will NOT automatically start but can be started locally after relieving intercooler pressure.

D. The EIAC is NOT available until the LOCA signal is cleared, PCIS reset, and the 1E breaker is closed.

Proposed Answer: D

Explanation (Optional):

A: The EIAC will automatically start if the LOCA signal is cleared. **INCORRECT**: 1E breaker must be reset and manually closed first.

B: The EIAC is NOT available until the Non-1E breaker is closed. **INCORRECT**: Not until 1E breaker is reset (LOCA signal) manually .

C: The EIAC will NOT automatically start but can be started locally after relieving intercooler pressure. **INCORRECT**: The EIAC is not available until the 1E breaker is reset (LOCA signal) and closed and instrument air pressure is less than 85 psig.

D: The EIAC is NOT available until the LOCA signal is cleared, PCIS reset, and the 1E breaker is closed. **CORRECT**: The EIAC is not available until the LOCA signal is cleared, PCIS reset, and the 1E breaker closed manually.

Technical Reference(s): OP-SO.KB-0001, Interlocks 3.3.5 (Attach if not previously provided)

Proposed References to be provided to applicants during examination: none

Learning Objective: INSAIRE015, From memory, determine the response of the emergency instrument air compressor to the following conditions. (As available)
a. Loss of Offsite Power (LOP)
b. Loss of Coolant Accident (LOCA)
c. Compressor intercooler pressure > 5 psig and a start signal received

Question Source: Bank # 56532

Modified Bank # (Note changes or attach parent)

New

Question History: NRC 2010

Question Cognitive Level: Memory or Fundamental Knowledge

Comprehension or Analysis X

10 CFR Part 55 Content: 55.41 7

55.43

Comments:

Facility: Hope Creek

Vendor: GE

Exam Date: 2012

Exam Type: RO

Examination Outline Cross-reference:	Level	RO	SRO
	Tier #	2	
	Group #	1	
	K/A #	263000 K1.04	
	Importance Rating	2.6	

Knowledge of the operational implications of the following concepts as they apply to D.C. ELECTRICAL DISTRIBUTION: Ground Detection

Question: RO #10

The plant is at rated power.

125VDC Distribution Panel 1AD417 Ground Indicator switch is in REMOTE.

Which of the following correctly describes the indication of a direct negative short to ground on one of the 125VDC class 1E power supplies (10D410)?

A. A negative ground current will be indicated on Control Room panel 10650D.

B. Both white lights on panel 10D410 will be brighter than normal.

C. One white light on panel 10D410 will be dimmer, the other extinguished.

D. Both white lights on panel 10D410 will be dimmer than normal.

Proposed Answer: A

Explanation (Optional):

A: With the 1AD417 Ground Indicator switch in REMOTE, negative ground current will be indicated on Control Room panel 10650D. **CORRECT**, When the LOCAL/REMOTE switch is in REMOTE, any current, positive or negative, due to a ground will indicate on Control Room Ground Detection Ammeters on Panel 10C650D.

B: Both white lights on panel 10D410 will be bright to indicate the magnitude of the ground. **INCORRECT**, When a ground exists, one light will be bright and the other will be dim.

C: One white light on panel 10D410 will be dimmer, the other extinguished if a hard ground exists.

INCORRECT, When a ground exists, one light will be bright and the other will be dim or extinguished depending on the magnitude of the ground.

D: Both white lights on panel 10D410 will be dimmer than normal. **INCORRECT**, Local indications of a ground are different indications.

Technical Reference(s): NOH01DCELEC (Attach if not previously provided)

Proposed References to be provided to applicants during examination: none

Learning Objective: DCELECE016, Given a set of plant conditions evaluate those conditions and determine if a D.C. ground exists. IAW Available Control Room References (As available)

Question Source: Bank # 61687

Modified Bank # (Note changes or attach parent)

New

Question History: NRC1998

Question Cognitive Level: Memory or Fundamental Knowledge X

Comprehension or Analysis

10 CFR Part 55 Content: 55.41 7

55.43

Comments:

Facility: Hope Creek

Vendor: GE

Exam Date: 2012

Exam Type: RO

Examination Outline Cross-reference:	Level	RO	SRO
	Tier #	2	
	Group #	1	
	K/A #	261000 K6.01	
	Importance Rating	2.9	

Knowledge of the effect that a loss or malfunction of the following will have on the STANDBY GAS TREATMENT SYSTEM : A.C. electrical distribution

Question: RO #11

Given:

- The plant is operating at 100% power
- A Loss of Offsite power occurs
- Drywell pressure is 5 psig and rising
- "A" Emergency Diesel Generator fails to start

Which one of the following describes the effect on FRVS after 3 minutes? (Assume NO operator action)

A. Only 3 Recirc Fans and NO Vent Fan started

B. Only 3 Recirc Fans and one (1) Vent Fan started

C. Only 4 Recirc Fans and NO Vent Fan started

D. Only 4 Recirc Fans and one (1) Vent Fan started

Proposed Answer: D

Explanation (Optional):

A: Only 3 Recirc Fans and NO Vent Fan started, **INCORRECT,** A vital bus (AG400-EDG) powers A/EVH213 FRVS Recirc and AV206 Vent fan. The B/C/DVH213 Recirc Fans will start as well as the AUTO start of FVH213 Recirc fan and BV206 Vent Fan after Low Flow from AVH213/AV206 Fans

B: Only 3 Recirc Fans and one (1) Vent Fan started, **INCORRECT,** A vital bus (AG400-EDG) powers A/EVH213 FRVS Recirc and AV206 Vent fan. The B/C/DVH213 Recirc Fans will start as well as the AUTO start of FVH213 Recirc fan and BV206 Vent Fan after Low Flow from

AVH213/AV206 Fans

C: Only 4 Recirc Fans and NO Vent Fan started, **INCORRECT,** A vital bus (AG400-EDG) powers A/EVH213 FRVS Recirc and AV206 Vent fan. The B/C/DVH213 Recirc Fans will start as well as the AUTO start of FVH213 Recirc fan and BV206 Vent Fan after Low Flow from AVH213/AV206 Fans

D: Only 4 Recirc Fans and one (1) Vent Fan started, **CORRECT,** A vital bus (AG400-EDG) powers A/EVH213 FRVS Recirc and AV206 Vent fan. The B/C/DVH213 Recirc Fans will start as well as the AUTO start of FVH213 Recirc fan and BV206 Vent Fan after Low Flow from AVH213/AV206 Fans

Technical Reference(s): OP-SO.GU-001, OP-AB.ZZ-135 (Attach if not previously provided)

Proposed References to be provided to applicants during examination: none

Learning Objective: SECCONE012, Given a set of conditions and a drawing of the controls, instrumentation and/or alarms located in the main control room, identify the status of the Secondary Containment by evaluation of the controls/ instrumentation/alarms. (As available)

Question Source: Bank # 68889

Modified Bank # (Note changes or attach parent)

New

Question History: NRC 2002

Question Cognitive Level: Memory or Fundamental Knowledge

Comprehension or Analysis X

10 CFR Part 55 Content: 55.41 7, 8

55.43

Comments:

Facility: Hope Creek

Vendor: GE

Exam Date: 2012

Exam Type: RO

Examination Outline Cross-reference:	Level	RO	SRO
	Tier #	2	
	Group #	1	
	K/A #	217000 K6.04	
	Importance Rating	3.5	

Knowledge of the effect that a loss or malfunction of the following will have on the REACTOR CORE ISOLATION COOLING SYSTEM (RCIC): Condensate storage and transfer system

Question: RO #12

Given:

- The Reactor Core Isolation Cooling (RCIC) is operating in Full Flow Recirc
- The RCIC flow controller is in "Automatic"
- RCIC turbine speed is 2450 rpm

Which of the following describes the response of RCIC turbine speed and system flow if the operator throttles the RCIC Test Bypass To CST Isolation Valve (F022) in the "open" direction for the given conditions?

(Compare the conditions after they stabilize to before the valve was throttled.)

A. RCIC turbine speed lowers, System flow remains unchanged.

B. RCIC turbine speed lowers, System flow goes down.

C. RCIC turbine speed rises, System flow remains unchanged.

D. RCIC turbine speed rises, System flow goes up.

Proposed Answer: A

Explanation (Optional):

A: RCIC turbine speed lowers, System flow remains unchanged **CORRECT,** With flow controller in Auto, opening the CST valve reduces the resistance to flow (system flow initially increases for that given turbine speed), flow controller reduces turbine speed to return back to the selected flow setpoint.

B: RCIC turbine speed lowers, System flow goes down **INCORRECT,** With flow controller in Auto, opening the CST valve reduces the resistance to flow (system flow initially increases for that

given turbine speed), flow controller reduces turbine speed to return back to the selected flow setpoint.

C: RCIC turbine speed rises, System flow remains unchanged **INCORRECT,** With flow controller in Auto, opening the CST valve reduces the resistance to flow (system flow initially increases for that given turbine speed), flow controller reduces turbine speed to return back to the selected flow setpoint.

D: RCIC turbine speed rises, System flow goes up **INCORRECT,** With flow controller in Auto, opening the CST valve reduces the resistance to flow (system flow initially increases for that given turbine speed), flow controller reduces turbine speed to return back to the selected flow setpoint.

Technical Reference(s): NOH04RCIC00 (Attach if not previously provided)

Proposed References to be provided to applicants during examination: none

Learning Objective: RCIC000E023, Given any of the following and appropriate control room reference material, evaluate and determine the effect on the RCIC system of the following IAW the RCIC System Lesson Plan: (As available)

a. A given valve opening or closure

Question Source: Bank # 55683

Modified Bank # (Note changes or attach parent)

New

Question History: NRC 1999

Question Cognitive Level: Memory or Fundamental Knowledge

Comprehension or Analysis X

10 CFR Part 55 Content: 55.41 7, 14

55.43

Comments:

Facility: Hope Creek

Vendor: GE

Exam Date: 2012

Exam Type: RO

Examination Outline Cross-reference:	Level	RO	SRO
	Tier #	2	
	Group #	1	
	K/A #	215005 A1.07	
	Importance Rating	3.0	

Ability to predict and/or monitor changes in parameters associated with operating the AVERAGE POWER RANGE MONITOR/LOCAL POWER RANGE MONITOR SYSTEM controls including: APRM (gain adjustment factor)

Question: RO #13

Given:

- The Mode Switch is in the STARTUP/HOT STANDBY position.
- All APRMs are indicating ≈ 1%.
- Reactor power is ≈ mid-scale on Range 7 of the IRMs.
- Reactor Recirc Pump speeds are at minimum.
- The "A" APRM is in bypass for an I & C surveillance

Then:

- During the surveillance the Tech inadvertently fails the APRM "C" upscale.

What is the response from RPS?

A. Half scram when "C" APRM indicates 14%.

B. Half scram when "C" APRM indicates 69%.

C. Full scram when "C" APRM indicates 14%.

D. Full scram when "C" APRM indicates 69%.

Proposed Answer: A

Explanation (Optional):

A: Half scram when "C" APRM indicates 14%. **CORRECT**, Scram setpoint is 14% with the Mode Switch in Startup. APRM Scram setpoints are always active. ½ Scram will occur on RPS A2.

B: Half scram when "C" APRM indicates 69% **INCORRECT,** Scram setpoint is 14% with the Mode Switch in Startup. APRM Scram setpoints are always active. ½ Scram will occur on RPS A2. The Upscale Thermal trip is 0.57(W-Δw) + 58% and would not be reached prior to half scram from the 14% setpoint. Min flow 20% x .57 resulting in 11 + 58% = 69%

C: Full scram when "C" APRM indicates 14% **INCORRECT,** Scram setpoint is 14% with the Mode Switch in Startup. APRM Scram setpoints are always active. ½ Scram will occur on RPS A2 .

D: Full scram when "C" APRM indicates 69% **INCORRECT,** Scram setpoint is 14% with the Mode Switch in Startup. APRM Scram setpoints are always active. ½ Scram will occur on RPS A2. The Upscale Thermal trip is 0.57(W-Δw) + 58% and would not be reached prior to half scram from the 14% setpoint. Min flow 20% x .57 resulting in 11 + 58% = 69%

Technical Reference(s): OP-SO.SE-0001 (Attach if not previously provided)

Proposed References to be provided to applicants during examination: none

Learning Objective: APRM00E009, From memory, IAW Technical Specifications, determine the rod blocks and/or scrams initiated by the APRM System, IAW available references. (As available)

Question Source: Bank # 80586

Modified Bank # (Note changes or attach parent)

New

Question History:

Question Cognitive Level: Memory or Fundamental Knowledge

Comprehension or Analysis X

10 CFR Part 55 Content: 55.41 2, 6

55.43

Comments:

Facility: Hope Creek

Vendor: GE

Exam Date: 2012

Exam Type: RO

Examination Outline Cross-reference:	Level	RO	SRO
	Tier #	2	
	Group #	1	
	K/A #	209001 A1.03	
	Importance Rating	3.8	

Ability to predict and/or monitor changes in parameters associated with operating the LOW PRESSURE CORE SPRAY SYSTEM controls including: Reactor water level

Question: RO #14

Given:

- A LOCA has occurred
- Reactor water level reached -130" and dropping
- Reactor pressure is 350 psig and slowly lowering
- Core Spray is the ONLY system available for injection

(1) Which of the following describes the capabilities for the Core Spray System (CS) Inboard Injection Valves (F005A & B) and the Outboard Injection Valves (F004A & B)?

AND

(2) How will vessel level restoration be affected?

A. (1) None of the four F004A/B OR F005A/B valves may be overridden open
(2) Vessel level will continue to lower.

B. (1) ONLY the F005A/B valves may be overridden open.
(2) Vessel injection from Core Spray will ONLY be available when overridden open.

C. (1) Core Spray is presently injecting because all four F004A/B OR F005A/B valves are open
(2) Vessel level restoration is available.

D. (1) Core Spray is NOT presently injecting because all four F004A/B OR F005A/B valves are closed.
(2) Vessel level will continue to lower.

Proposed Answer: C

Explanation (Optional):

A: None of the four F004A/B OR F005A/B valves may be overridden closed AND vessel level will continue to lower. **INCORRECT,** The F005 valves may be overridden closed with initiation signal present by the Auto Open Ovrd pushbuttons.

B: ONLY the F005A/B valves may be overridden open AND vessel injection from Core Spray will ONLY be available when overridden open. **INCORRECT,** The F005 valves may be overridden closed with initiation signal present by the Auto Open Ovrd pushbuttons.

C: Core Spray is presently injecting because all four F004A/B OR F005A/B valves are open AND vessel level restoration is available. **CORRECT,** With reactor pressure 350 psig and dropping and shutoff head ≈ 385 psig, the injection valves would be open and pumps would be injecting . Normal lineup for the F005A/B is closed and the F004A/B is open

D: Core Spray is NOT presently injecting because all four F004A/B OR F005A/B valves are closed AND vessel level will continue to lower. **INCORRECT,** With reactor pressure 350 psig and dropping and shutoff head ≈ 385 psig, the injection valves would be open and pumps would be injecting . Normal lineup for the F005A/B is closed and the F004A/B is open

Technical Reference(s): OP-SO.BE-0001, M-52-0 (Attach if not previously provided)

Proposed References to be provided to applicants during examination: none

Learning Objective: CSSYS0E013, Given a set of conditions and a drawing of the controls, instrumentation and/or alarms located in the Control Room, assess the status of the Core Spray System or its components by evaluation of the controls/instrumentation/alarms. (As available)

Question Source: Bank #

Modified Bank # (Note changes or attach parent)

New X

Question History:

Question Cognitive Level: Memory or Fundamental Knowledge

Comprehension or Analysis X

10 CFR Part 55 Content: 55.41 7, 8

55.43

Comments:

Facility: Hope Creek

Vendor: GE

Exam Date: 2012

Exam Type: RO

Examination Outline Cross-reference:	Level	RO	SRO
	Tier #	2	
	Group #	1	
	K/A #	215003 A2.06	
	Importance Rating	3.0	

Ability to (a) predict the impacts of the following on the INTERMEDIATE RANGE MONITOR (IRM) SYSTEM ; and (b) based on those predictions, use procedures to correct, control, or mitigate the consequences of those abnormal conditions or operations: Faulty Range Switch

Question: RO #15

A reactor startup is in progress:

IRM channel "C" chart recorder is presently indicating “35” on Range 4 and continues to read “35”, even after the range switch is moved to Range 5.

What should the chart recorder show when the Range switch for the IRM channel "C" is taken to Range 5 AND what actions are required for this condition?

A. The indication should have dropped down to “3.5” on the 0-40 range. Terminate control rod withdrawal, bypass the “C” IRM AND verify the rod block has reset.

B. The indication should be off-scale high on the 0-125 range. Terminate control rod withdrawal, bypass the “C” IRM AND reset the half-scram.

C. The indication should have dropped down to “1.12” on the 0-40 range. Terminate control rod withdrawal, bypass the “C” IRM AND verify the rod block has reset.

D. The indication should have jumped up to “112” on the 0-125 range. Terminate control rod withdrawal, bypass the “C” IRM AND reset the half-scram.

Proposed Answer: A

Explanation (Optional):

A: The indication should have dropped down to “3.5” on the 0-40 range, as an additional attenuator {x .1} is placed in service in the circuitry for the new range of indication. **CORRECT,** When ranged up to range 5 the percentage is 35/125 (from range 4) When converting the denominator

to 40ths it becomes 1.12/40 of the scale.

B: The indication should be off-scale high on the 0-125 range, as an additional attenuator {x 10} is placed in service in the circuitry for the new range of indication. **INCORRECT,** When ranged up to range 5 the percentage is 35/125 (from range 4) When converting the denominator to 40ths it becomes 1.12/40 of the scale.

C: The indication should have dropped down to "1.12" on the 0-40 range, as an additional attenuator {x .1} is placed in service in the circuitry for the new range of indication. **INCORRECT,** When ranged up to range 5 the percentage is 35/125 (from range 4) When converting the denominator to 40ths it becomes 1.12/40 of the scale.

D: The indication should have jumped up to "112" on the 0-125 range, as an additional attenuator {x 10} is placed in service in the circuitry for the new range of indication. **INCORRECT,** When ranged up to range 5 the percentage is 35/125 (from range 4) When converting the denominator to 40ths it becomes 1.12/40 of the scale.

Technical Reference(s): NOH01IRMSYS, page 11 (Attach if not previously provided)

Proposed References to be provided to applicants during examination: none

Learning Objective: IRMSYSE005, Given a scenario of applicable operating conditions, determine the parameter setpoint, and bypass conditions for each IRM signal which will initiate a rod block and/or reactor scram, IAW control room procedures. (As available)

Question Source: Bank #

Modified Bank # (Note changes or attach parent)

New X

Question History:

Question Cognitive Level: Memory or Fundamental Knowledge

Comprehension or Analysis X

10 CFR Part 55 Content: 55.41 2, 6

55.43

Comments:

Facility: Hope Creek

Vendor: GE

Exam Date: 2012

Exam Type: RO

Examination Outline Cross-reference:	Level	RO	SRO
	Tier #	2	
	Group #	1	
	K/A #	215004 A2.01	
	Importance Rating	2.7	

Ability to (a) predict the impacts of the following on the SOURCE RANGE MONITOR (SRM) SYSTEM ; and (b) based on those predictions, use procedures to correct, control, or mitigate the consequences of those abnormal conditions or operations: Power supply degraded

Question: RO #16

Given:

- Special low power nuclear testing is in progress
- Shorting Links have been removed
- The 'C' SRM high Voltage power supply fails.
- 'C' SRM counts drop to zero.

What is the plant response?

A. A withdraw rod block (only) exists.

B. An insert AND withdraw rod block exist.

C. A withdraw rod block AND a trip of RPS channel A2 exist.

D. A withdraw rod block AND a full scram exist.

Proposed Answer: A

Explanation (Optional):

A: A withdraw rod block (only) exists. **CORRECT,** SO.SE-0001 SRM downscale and SRM INOP do not input into RPS, Limitations step 3.2.2 and 3.2.3.

B: An insert AND withdraw rod block exist. **INCORRECT,** Only the RWM inputs a insert block, SO.SE-0001 SRM downscale and SRM INOP do not input into RPS, Limitations step 3.2.2 and 3.2.3.

C: A withdraw rod block AND a trip of RPS channel A2 exist. **INCORRECT,** No input to RPS from SRM downscale and/or SRM INOP, SO.SE-0001 SRM downscale and SRM INOP do not input into RPS, Limitations step 3.2.2 and 3.2.3.

D: A withdraw rod block AND a full scram exist. **INCORRECT,** No input to RPS from SRM downscale and/or SRM INOP, SO.SE-0001 SRM downscale and SRM INOP do not input into RPS, Limitations step 3.2.2 and 3.2.3.

Technical Reference(s): OP-SO.SE-0001 (Attach if not previously provided)

Proposed References to be provided to applicants during examination: none

Learning Objective: ABIC04E004, Explain the reasons for how plant/system parameters respond when implementing Neutron Monitoring. (As available)

Question Source: Bank #

Modified Bank # (Note changes or attach parent)

New X

Question History:

Question Cognitive Level: Memory or Fundamental Knowledge

Comprehension or Analysis X

10 CFR Part 55 Content: 55.41 2, 7

55.43

Comments:

Facility: Hope Creek

Vendor: GE

Exam Date: 2012

Exam Type: RO

Examination Outline Cross-reference:	Level	RO	SRO
	Tier #	2	
	Group #	1	
	K/A #	203000 A3.06	
	Importance Rating	3.7	

Ability to monitor automatic operations of the RHR/LPCI: INJECTION MODE (PLANT SPECIFIC) including: Indicating lights and alarms

Question: RO #17

Given:

- The reactor is shutdown
- All control rods fully inserted.
- Reactor pressure is 385 psig and stable
- RPV level is being held relatively constant
- Preparation for entry into Mode 4 is on-going

Then, 'C' RHR Loop receives a spurious LOCA level 1 signal and the OHA A6-A4 RHR LPCI LOOP C INITIATED is received.

Which of the following describes the status of "C" RHR?

A. BC-HV F017C (LPCI Injection valve) indicates open and the 'C' RHR minimum flow control valve (HV-F007C) will indicate open.

B. BC-HV F017C (LPCI Injection valve) indicates open and the 'C' RHR minimum flow control valve (HV-F007C) will indicate closed.

C. BC-HV F017C (LPCI Injection valve) indicates closed and the 'C' RHR minimum flow control valve (HV-F007C) will indicate open.

D. BC-HV F017C (LPCI Injection valve) indicates closed and the 'C' RHR minimum flow control valve (HV-F007C) will indicate closed.

Proposed Answer: A

Explanation (Optional):

A: BC-HV F017C (LPCI Injection valve) indicates open and the 'C' RHR minimum flow control valve (HV-F007C) will indicate open. **CORRECT,** The F017C will be open as the reactor pressure permissive of < 450 psig is satisfied with an injection signal present. The F007C will still be open as system flow is < 1270 gpm, because reactor pressure is above the shutoff head of the pump (366 psig) and will not be injecting to the vessel.

B: BC-HV F017C (LPCI Injection valve) indicates open and the 'C' RHR minimum flow control valve (HV-F007C) will indicate closed. **INCORRECT,** The F017C will be open as the reactor pressure permissive of < 450 psig is satisfied with an injection signal present. The F007C will still be open as system flow is < 1270 gpm, because reactor pressure is above the shutoff head of the pump (366 psig) and will not be injecting to the vessel.

C: BC-HV F017C (LPCI Injection valve) indicates closed and the 'C' RHR minimum flow control valve (HV-F007C) will indicate open. **INCORRECT,** The F017C will be open as the reactor pressure permissive of < 450 psig is satisfied with an injection signal present. The F007C will still be open as system flow is < 1270 gpm, because reactor pressure is above the shutoff head of the pump (366 psig) and will not be injecting to the vessel.

D: BC-HV F017C (LPCI Injection valve) indicates closed and the 'C' RHR minimum flow control valve (HV-F007C) will indicate closed. **INCORRECT,** The F017C will be open as the reactor pressure permissive of < 450 psig is satisfied with an injection signal present. The F007C will still be open as system flow is < 1270 gpm, because reactor pressure is above the shutoff head of the pump (366 psig) and will not be injecting to the vessel.

Technical Reference(s): NOH01RHRSYSC,pages 14,24, 35 (Attach if not previously provided)

Proposed References to be provided to applicants during examination: none

Learning Objective: RHRSYSE011, Given a labeled drawing of, or access to the Residual Heat Removal System controls/indication on 10C650: a. Explain the function of each indicator IAW available control room references. b. Assess plant conditions which will cause the indicators to light or extinguish IAW available control room references. c. Determine the effect of each control on the RHR System IAW available control room references. d. Assess plant conditions or permissives required for the control switches / pushbuttons to perform their intended functions IAW available control room references. (As available)

Question Source: Bank #

Modified Bank # (Note changes or attach parent)

New X

Question History:

Question Cognitive Level:	Memory or Fundamental Knowledge		
	Comprehension or Analysis		X
10 CFR Part 55 Content:	55.41	7, 8	
	55.43		

Comments:

Facility: Hope Creek

Vendor: GE

Exam Date: 2012

Exam Type: RO

Examination Outline Cross-reference:	Level	RO	SRO
	Tier #	2	
	Group #	1	
	K/A #	400000 A3.01	
	Importance Rating	3.0	

Ability to monitor automatic operations of the CCWS including: Setpoints on instrument signal levels for normal operations, warnings, and trips that are applicable to the CCWS

Question: RO #18

Given:

- The plant is operating at rated power.
- TACS return accumulator (AT-412) develops a leak in its instrument tubing
- Sensed pressure in the transmitters drops to 20 psig.

Which one of the following describes the plant response?
(Assume NO operator actions are successful).

A. TACS valves HV-2522E/F CLOSE. TACS supply and return valves (HV-2522/2496) from both SACS loops will be open.

B. TACS valves HV-2522E/F CLOSE. TACS supply and return valves (HV-2522/2496) from both SACS loops will be closed.

C. TACS valves HV-2522E/F remain OPEN. TACS supply and return valves (HV-2522/2496) from both SACS loops will be closed.

D. TACS valves HV-2522E/F remain OPEN. TACS supply and return valves (HV-2522/2496) from both SACS loops will be open.

Proposed Answer: A

Explanation (Optional):

A: TACS valves HV-2522E/F CLOSE. TACS supply and return valves (HV-2522/2496) from both SACS loops will be open. If the TACS loss is sustained, reduce Reactor Recirculation pumps to

minimum speed and lock the mode switch in shutdown. **CORRECT,** AB.COOL-002, Retainment Override Condition - Complete and Sustained Loss of TACS, Action – Ia. Reduce Reactor Recirculation Pumps to Minimum Speed. Ib. LOCK the Reactor Mode Switch in SHUTDOWN. Interlocks section: Low TACS pressure at supply OR return accumulators (22 psig) causes TACS HV-2522E/F to close. Low SACS to TACS flow from In-Service loop (9,900 gpm) In-service loop SACS pumps transfer to MAN. Standby Loop SACS Pumps Start IF in AUTO. TACS supply and return valves on standby SACS loop open IF respective pump AND valve control is in AUTO.

B: TACS valves HV-2522E/F CLOSE. TACS supply and return valves (HV-2522/2496) from both SACS loops will be closed. If the TACS loss is sustained, lock the mode switch in shutdown and then trip both Reactor Recirculation pumps. **INCORRECT**

C: TACS valves HV-2522E/F remain OPEN. TACS supply and return valves (HV-2522/2496) from both SACS loops will be closed. If the TACS loss is sustained, lock the mode switch in shutdown and then trip both Reactor Recirculation pumps. **INCORRECT**

D: TACS valves HV-2522E/F remain OPEN. TACS supply and return valves (HV-2522/2496) from both SACS loops will be open. If the TACS loss is sustained, reduce Reactor Recirculation pumps to minimum speed and lock the mode switch in shutdown. **INCORRECT**

Technical Reference(s): OP-AB.COOL-002, AR.ZZ-0029 page 99, OP-SO.EG-001 (Attach if not previously provided)

Proposed References to be provided to applicants during examination: none

Learning Objective: ABCOL2E004, Explain the reasons for how plant/system parameters respond when implementing Safety Auxiliaries Cooling System. (As available)

Question Source: Bank #

Modified Bank # 119057 (Note changes or attach parent)

New

Question History:

Question Cognitive Level: Memory or Fundamental Knowledge

Comprehension or Analysis X

10 CFR Part 55 Content: 55.41 4, 7

55.43

Comments:

Facility: Hope Creek

Vendor: GE

Exam Date: 2012

Exam Type: RO

Examination Outline Cross-reference:	Level	RO	SRO
	Tier #	2	
	Group #	1	
	K/A #	223002 A4.02	
	Importance Rating	3.9	

Ability to manually operate and/or monitor in the control room: Manually initiate the system (PCIS)

Question: RO #19

The plant is in OPCON 4:

- Primary Containment has been de-inerted
- Containment Atmosphere Control System (CACS) is aligned to purge the drywell and suppression chamber
- The 'B' and 'C' Reactor Building Ventilation Supply and Exhaust Fans are running
- The 'A' Reactor Building Ventilation Supply and Exhaust Fans are in AUTO

Then,

- An operator arms and depresses the 'D' Channel PCIS Manual Initiation pushbutton on 10C651C for a surveillance test.

Two minutes later AND after plant condition(s) stabilize, what is the change (if any) in the containment purge lineup AND the Reactor Building Ventilation System (RBVS)?

A. There is NO change.

B. There is NO change in the containment purge lineup. All RBVS fans will be tripped.

C. Drywell and Suppression Chamber purge supply and exhaust lines will be isolated. All RBVS fans will be tripped.

D. Drywell and Suppression Chamber purge supply and exhaust lines will be isolated. The running RBVS fans will remain in service.

Proposed Answer: C

Explanation (Optional):

A: There is NO change. **INCORRECT**, Manual initiation of the 'D' Channel PCIS closes the GS-HV-4950, 4962, 4979, and 4980. These valves isolate the purge supply and exhaust lines. While the 'D' channel does not directly trip the running RBVS supply and exhaust fans, it will isolate the Reactor Building Ventilation System supply and exhaust lines, which will result in all running fans tripping on low flow after a 90 second time delay.

B: There is NO change in the containment purge lineup. All RBVS fans will be tripped. **INCORRECT**. Manual initiation of the 'D' Channel PCIS closes the GS-HV-4950, 4962, 4979, and 4980. These valves isolate the purge supply and exhaust lines.

C: Drywell and Suppression Chamber purge supply and exhaust lines will be isolated. All RBVS fans will be tripped. **CORRECT.** Manual initiation of the 'D' Channel PCIS closes the GS-HV-4950, 4962, 4979, and 4980. These valves isolate the purge supply and exhaust lines. While the 'D' channel does not directly trip the running RBVS supply and exhaust fans, it will close the GU-HD-9414B and 9370B. These valves isolate the Reactor Building Ventilation System supply and exhaust lines, which will result in all running fans tripping on low flow after a 90 second time delay. The 'A' RBVS supply and exhaust fans are directly tripped (load shed) by the 'D' Channel PCIS signal.

D: Drywell and Suppression Chamber purge supply and exhaust lines will be isolated. The running RBVS fans will remain in service. **INCORRECT,** While the 'D' channel does not directly trip the running RBVS supply and exhaust fans, it will isolate the Reactor Building Ventilation System supply and exhaust lines, which will result in all running fans tripping on low flow after a 90 second time delay.

Technical Reference(s): OP-SO.GS-0001,OP-SO.SM-0001 (Attach if not previously provided)
OP-ST.SM-0001, M-57/76

Proposed References to be provided to applicants during examination: M-57-1, M-76-1

Learning Objective: INERT0E012, Given plant parameters, analyze plant parameters for conditions that will automatically isolate the Containment inerting and makeup flowpaths. (As available)

Question Source: Bank #

Modified Bank # 62574 (Note changes or attach parent)

New

Question History: NRC 2009

Question Cognitive Level: Memory or Fundamental Knowledge

Comprehension or Analysis X

10 CFR Part 55 Content: 55.41 7, 8

55.43

Comments:

Facility: Hope Creek

Vendor: GE

Exam Date: 2012

Exam Type: RO

Examination Outline Cross-reference:	Level	RO	SRO
	Tier #	2	
	Group #	1	
	K/A #	212000 A4.01	
	Importance Rating	4.6	

Ability to manually operate and/or monitor in the control room: Provide manual SCRAM signal(s)

Question: RO #20

The CRS directs a manual scram from 56% power. The RO places the Mode Switch in the SHUTDOWN position.

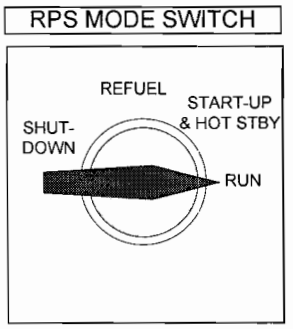

Of the following, what was the first scram signal seen by the RPS logic?

A. 120/125 on Range 5 of the IRMs.

B. > 14% power as sensed by the APRMs.

C. > 2 x 10^5 CPS as sensed by the SRMs.

D. Rx Mode switch in the shutdown position.

Proposed Answer: B

Explanation (Optional):

A: 120/125 on Range 5 of the IRMs. **INCORRECT,** IRMs are taken to Range 3 after mode switch is taken to run, per procedure IO-003, on range 5, readings would be downscale.

B: > 14% power as sensed by the APRMs. **CORRECT,** > 14% power as sensed by the APRMs-Mode switch placed in STARTUP/HOT STBY with power greater than 14%.

C: > 2 x 10^5 CPS as sensed by the SRMs. **INCORRECT,** SRMs are withdrawn and less than the scram setpoint.

D: Rx Mode switch in the shutdown position. **INCORRECT,** 14% power as sensed by the APRMs-Mode switch placed in STARTUP/HOT STBY with power greater than 14%. Even though a back-up scram signal would be generated in the Shutdown position the Up-scale (>14%) signal would generated first.0

Technical Reference(s): OP-SO.SE-0001 (Attach if not previously provided)

Proposed References to be provided to applicants during examination: none

Learning Objective: RPS000E004, From memory, identify the parameters which initiate a Reactor Scram, list the scram initiation setpoints for each identified parameter, and determine when the parameter is bypassed. (As available)

Question Source: Bank # 56367

Modified Bank # (Note changes or attach parent)

New

Question History:

Question Cognitive Level: Memory or Fundamental Knowledge X

Comprehension or Analysis

10 CFR Part 55 Content: 55.41 6, 7

55.43

Comments:

Facility: Hope Creek

Vendor: GE

Exam Date: 2012

Exam Type: RO

Examination Outline Cross-reference:	Level	RO	SRO
	Tier #	2	
	Group #	1	
	K/A #	259002 2.1.30	
	Importance Rating	4.4	

Conduct of Operations: Ability to locate and operate components, including local controls. (Reactor Water Level Control)

Question: RO #21

Given:

- Reactor power is 98%
- Plant conditions are normal
- All three feed pumps are in service
- OHA B3-F3 'RFP TURBINE AUTO XFR TO MANUAL' has alarmed
- The overhead alarm (B3-F3) is associated with the 1AP101 'A' RFPT
- The 1AP101 'A' RFPT has had a complete control signal failure

'A' RFPT speed can be controlled...

A. locally at panel 1AC-132, ONLY.

B. immediately in Manual using the PDS.

C. using the INC SPEED and DEC SPEED buttons.

D. manually using the PDS following a 30 second time delay.

Proposed Answer: C

Explanation (Optional):

A: Locally (1AC-132) ONLY. **INCORRECT,** the INC SPEED and DEC SPEED pushbuttons on 10C651B allow speed control from the Main Control Room.

B: immediately in Manual using the PDS. **INCORRECT,** the PDS is not available with a Control Signal Failure condition.

C: using the INC SPEED and DEC SPEED buttons. **CORRECT**, RFP TURBINE AUTO XFER TO MANUAL occurs if a RFP experiences a Control Signal Failure, or following an RRCS Runback (ATWS). Since plant conditions are normal (given conditions), an ATWS/RRCS Runback can be ruled out. In the case of a Control Signal Failure, the affected RFP can only be controlled using the INC SPEED and DEC SPEED pushbuttons.

D: manually using the PDS following a 30 second time delay. **INCORRECT,** the PDS is not available with a Control Signal Failure condition.

Technical Reference(s): OP-AB.RPV-004; OP-AR.ZZ-0007, Attachment F3. (Attach if not previously provided)

Proposed References to be provided to applicants during examination: none

Learning Objective: FWCONTE011, From memory, describe the response of the respective RFPT if it senses a Control Signal Failure, IAW Available Control Room References. (As available)

Question Source: Bank # 53564

Modified Bank # (Note changes or attach parent)

New

Question History:

Question Cognitive Level: Memory or Fundamental Knowledge

Comprehension or Analysis X

10 CFR Part 55 Content: 55.41 7

55.43

Comments:

Facility: Hope Creek

Vendor: GE

Exam Date: 2012

Exam Type: RO

Examination Outline Cross-reference:	Level	RO	SRO
	Tier #	2	
	Group #	1	
	K/A #	211000 2.1.32	
	Importance Rating	3.8	

Ability to explain and apply system limits and precautions. (SLC)

Question: RO #22

IAW HC.OP-IS.BH-0001, SLC Pump AP208 Inservice Test, which of the following is a procedural precaution and why?

The improper sequence of valve operations when flushing the pump can…

A. result in dilution of the boron concentration in the SLC test tank.

B. introduce air into the suction piping and result in pump air binding.

C. result in dilution of the boron concentration in the pump discharge piping.

D. introduce air into the pump discharge piping resulting in possible relief valve lifting

Proposed Answer: B

Explanation (Optional):

A: result in dilution of the boron concentration in the SLC test tank. **INCORRECT**, IAW OP-IS.BH-001, step 3.1.6. "The sequence of valve operations when flushing the SLC Pump suction piping is important. They are in this order to preclude introducing air into the SLC Pump suction." The SLC test tank is normally only filled with demin water and dilution is not a concern.

B: introduce air into the suction piping and result in pump air binding. **CORRECT**, IAW OP-IS.BH-001, step 3.1.6. "The sequence of valve operations when flushing the SLC Pump suction piping is important. They are in this order to preclude introducing air into the SLC Pump suction."

C: result in dilution of the boron concentration in the pump discharge piping. **INCORRECT,** IAW OP-IS.BH-001, step 3.1.6. "The sequence of valve operations when flushing the SLC Pump suction piping is important. They are in this order to preclude introducing air into the SLC Pump suction." The discharge piping is normally filled with demin water and would only have boron solution if the pumps had been in-service drawing suction from the main SLC tank.

D: introduce air into the pump discharge piping resulting in possible relief valve lifting. **INCORRECT**, IAW OP-IS.BH-001, step 3.1.6. "The sequence of valve operations when flushing

the SLC Pump suction piping is important. They are in this order to preclude introducing air into the SLC Pump suction." The SLC pumps are positive displacement pumps and would pump the air out of the discharge piping and into the RPV. The relief valves would not open as the air would be compressed by the pumps and not cause the relief valves to lift.

Technical Reference(s): OP-IS.BH-0001 (Attach if not previously provided)

Proposed References to be provided to applicants during examination: none

Learning Objective: SLCSYSE003, Given P&ID's determine the following flowpaths for the Standby Liquid Control System. a. Standby Liquid Control System Injection flowpath, b. Standby lineup c. Standby Liquid Control System testing flowpath (As available)

Question Source: Bank #

Modified Bank # (Note changes or attach parent)

New X

Question History:

Question Cognitive Level: Memory or Fundamental Knowledge

Comprehension or Analysis X

10 CFR Part 55 Content: 55.41 1, 5

55.43

Comments:

Facility: Hope Creek

Vendor: GE

Exam Date: 2012

Exam Type: RO

Examination Outline Cross-reference:	Level	RO	SRO
	Tier #	2	
	Group #	1	
	K/A #	212000 2.4.11	
	Importance Rating	4.0	

Emergency Procedures / Plan: Knowledge of abnormal condition procedures. (RPS)

Question: RO #23

Given:

- The Reactor is operating at 20% power
- Main Generator output is ≈ 256 MWe
- Main Turbine 1st Stage Pressure is 75.8 psig
- RPS Bus 'B' is de-energized due to a ground fault
- Crew has entered OP-AB.IC-003, Reactor Protection System

Then:

- The main turbine trips due to failed reactor level 8 logic inputs.

Which of the following describes the plant's response and the required actions?

A. Both Reactor Recirc Pumps trip, Lock the Mode Switch in shutdown and enter EOP-101, RPV Control.

B. ONLY the 'B' Reactor Recirc Pump trips, enter OP-AB.RPV-003, Recirculation System/Power Oscillations.

C. Main Turbine bypass valves cycle open on the initial pressure transient, enter EOP-101A, ATWS RPV Control on the failure to scram.

D. ONLY the reactor scrams, Lock the Mode Switch in shutdown enter EOP-101 RPV Control.

Proposed Answer: A

Explanation (Optional):

A: Both Reactor Recirc Pumps trip, Lock the Mode Switch in shutdown and enter EOP-101,

RPV Control. **CORRECT,** A precaution in HC.OP-SO.SB-0001 warns that transfer of an RPS power supply will result in EOC-RPT actuation and a recirc pump trip if the Turbine Stop valves are closed. This is due to the momentary loss of power to the RPS bus during the transfer. The only way to prevent this is to bypass the EOC-RPT trip with the Recirc Pump Trip System Disable switches. IAW OP-IO.ZZ-0003, the Recirc Pump Trip System Disable switches are placed in NORMAL immediately after synchronizing and loading the Main Turbine, and prior to placing feedwater in Single Element control on the Master level controller. The initial conditions for this question have the plant at a point where the switches would already be in NORMAL. EOP-101 entry is required after LOCKING the mode switch in shutdown due to having NO Rx Recirc pumps running and the reactor is critical, per immediate operator action of OP-AB.RPV-003

B: ONLY the 'B' Reactor Recirc Pump trips, enter OP-AB.RPV-003, Recirculation System/Power Oscillations. **INCORRECT,** A precaution in HC.OP-SO.SB-0001 warns that transfer of an RPS power supply will result in EOC-RPT actuation and a recirc pump trip if the Turbine Stop valves are closed. This is due to the momentary loss of power to the RPS bus during the transfer. The only way to prevent this is to bypass the EOC-RPT trip with the Recirc Pump Trip System Disable switches. IAW HC.OP-IO.ZZ-0003, the Recirc Pump Trip System Disable switches are placed in NORMAL immediately after synchronizing and loading the Main Turbine, and prior to placing feedwater in Single Element control on the Master level controller. The initial conditions for this question have the plant at a point where the switches would already be in NORMAL.

C: Main Turbine bypass valves cycle open on the initial pressure transient, enter EOP-101A, ATWS RPV Control on the failure to scram. **INCORRECT,** While the main turbine bypass valves will initially cycle open on the trip of the turbine to maintain reactor pressure stable, the reactor will not scram, this is because there is NO scram signal present. No need to enter the ATWS EOP for a failure to scram, there was no scram signal to fail.

D: Only the reactor scrams, Lock the Mode Switch in shutdown enter EOP-101 RPV Control, **INCORRECT,** the reactor will not scram, this is because there is NO scram signal present. EOP-101 entry is required after LOCKING the mode switch in shutdown due to having No Recirc pumps running and the reactor is critical, per immediate operator action of OP-AB.RPV-003

Technical Reference(s): HC.OP-SO.SB-001, PN1-C71-1020-006 Shts 9/11/13/15 OP-IO.ZZ-003, OP-AB.RPV-003 (Attach if not previously provided)

Proposed References to be provided to applicants during examination: none

Learning Objective: RPS000E014, Given labeled diagrams/drawings of the RPS trip logics, explain the coincidence requirements necessary to generate a reactor scram. (As available)

Question Source: Bank #

Modified Bank # (Note changes or attach parent)

New X

Question History:

Question Cognitive Level:	Memory or Fundamental Knowledge		
	Comprehension or Analysis		X
10 CFR Part 55 Content:	55.41	6, 7	
	55.43		

Comments:

Facility: Hope Creek

Vendor: GE

Exam Date: 2012

Exam Type: RO

Examination Outline Cross-reference:	Level	RO	SRO
	Tier #	2	
	Group #	1	
	K/A #	264000 A4.04	
	Importance Rating	3.7	

Ability to manually operate and/or monitor in the Control Room: Manual start, loading, and stopping of emergency generator: Plant Specific

Question: RO #24

Given:

- An NCO attempts to manually start the B (1BG400) Emergency Diesel Generator (EDG) from the 10C651E panel.
- Ten (10) seconds after the pushbutton on 10C651E was depressed the EDG speed is 100 rpm.
- DIESEL ENG PNL A/B/C/D C423 alarm is received.

Which of the following describes the current status of the B EDG?

The B EDG starting air solenoid valves are _____.

A. closed and the B EDG has successfully started.

B. closed and the B EDG will continue to roll down and stop.

C. open because the start signal is still present and speed has NOT exceeded 125 rpm.

D. open and the B EDG will continue to roll for another 5 seconds unless its speed reaches 125 rpm.

Proposed Answer: B

Explanation (Optional):

A: closed and the B EDG has successfully started. **INCORRECT,** The Start Failure Relay will have actuated. The EDG will stop. The start failure circuit will close the air start valves 7 seconds after the start signal. With the engine running >40 RPM but less than 125, the Start Failure Crankshaft

Rotating alarm will be in. The air start circuits are disabled until the Engine Shutdown relays are reset.

B: closed and the B EDG will continue to roll down and stop. **CORRECT,** The start failure circuit will close the air start valves 7 seconds after the start signal. With the engine running >40 RPM but less than 125, the Start Failure Crankshaft Rotating alarm will be in. The air start circuits are disabled until the Engine Shutdown relays are reset.

C: open because the start signal is still present and speed has NOT exceeded 125 rpm. **INCORRECT,** The Start Failure Relay will have actuated. The start valves will be closed until the SFR is manually reset. The start failure circuit will close the air start valves 7 seconds after the start signal. With the engine running >40 RPM but less than 125, the Start Failure Crankshaft Rotating alarm will be in. The air start circuits are disabled until the Engine Shutdown relays are reset.

D: open and the B EDG will continue to roll for another 5 seconds unless its speed reaches 125 rpm. **INCORRECT**, The start valves will be closed until the SFR is manually reset. The Start Failure Relay will have actuated 7 seconds after the start signal if rpm not >125.

Technical Reference(s): NOH04EDG000C (Attach if not previously provided)

Proposed References to be provided to applicants during examination: none

Learning Objective: EDG000E007, Given plant conditions, determine if the Diesel Generator will trip under manual and/or automatic start conditions. (As available)

Question Source: Bank #

Modified Bank # (Note changes or attach parent)

New X

Question History:

Question Cognitive Level: Memory or Fundamental Knowledge X

Comprehension or Analysis

10 CFR Part 55 Content: 55.41 7, 8

55.43

Comments:

Facility: Hope Creek

Vendor: GE

Exam Date: 2012

Exam Type: RO

Examination Outline Cross-reference:	Level	RO	SRO
	Tier #	2	
	Group #	1	
	K/A #	239002 A3.01	
	Importance Rating	3.8	

Ability to monitor automatic operations of the RELIEF/SAFETY VALVES including: SRV operation after ADS actuation

Question: RO #25

Given:

During the post-transient panel walk-down, how can the operator validate which of the ADS SRVs did and did NOT open?

A. Its Acoustic Monitor is placed in the "T" mode.

B. Its Acoustic Monitor is placed in the "C" mode.

C. The Tailpipe Temperature recorder is placed in "DATA" mode.

D. The Tailpipe Temperature recorder is placed in "COUNT" mode.

Proposed Answer: B

Explanation (Optional):

A: Its Acoustic Monitor is placed in the "T" mode, **INCORRECT,** this switch position will display in the LED window, the current setpoint in decibels (Threshold) at which the Acoustic Monitor would indicate that the chosen SRV is open.

B: Its Acoustic Monitor is placed in the "C" mode, **CORRECT,** this switch position will display in the LED window, the number of times (Counts) the Acoustic Monitor would indicate that the chosen SRV has exceeded the threshold value, since the last time the counter was reset.

C: The Tailpipe Temperature recorder is placed in "DATA" mode, **INCORRECT,** the temperature recorder will display/record the temperature of each SRV tailpipe. Because it takes time for the tailpipe temperature to lower once an SRV has closed, the recorder is not suitable to display opening/closing cycles

D: The Tailpipe Temperature recorder is placed in "COUNT" mode, **INCORRECT,** the temperature recorder will display/record the temperature of each SRV tailpipe. Because it takes time for the tailpipe temperature to lower once an SRV has closed, the recorder is not suitable to display

opening/closing cycles

Technical Reference(s): NOH01ADSSYSC (Attach if not previously provided)

Proposed References to be provided to applicants during examination: none

Learning Objective: ADSSYSE004, Given a labeled diagram/drawing of, or access to, the Automatic Depressurization System controls/indication bezel, IAW available Control Room references: a. Explain the function of each indicator. b. Assess plant conditions which will cause the indicator to light or extinguish. (As available)

Question Source: Bank #

Modified Bank # 55821 (Note changes or attach parent)

New

Question History:

Question Cognitive Level: Memory or Fundamental Knowledge X

Comprehension or Analysis

10 CFR Part 55 Content: 55.41 7, 8

55.43

Comments:

Facility: Hope Creek

Vendor: GE

Exam Date: 2012

Exam Type: RO

Examination Outline Cross-reference:	Level	RO	SRO
	Tier #	2	
	Group #	1	
	K/A #	217000 K3.04	
	Importance Rating	3.6	

Knowledge of the effect that a loss or malfunction of the REACTOR CORE ISOLATION COOLING SYSTEM (RCIC) will have on following: Adequate core cooling

Question: RO #26

The Unit has experienced a trip of all feed pumps from 100% power.

- HPCI is inoperable
- RCIC and CRD are in operation to establish core cooling
- Reactor water level is -150 inches and slowly lowering

RCIC is operating in AUTOMATIC with the following control board indications:

- Pump Suction Pressure 15 psig
- Pump Discharge Pressure 225 psig
- Turbine Inlet Pressure 910 psig
- Turbine Exhaust Pressure 10 psig
- Turbine Speed 2200 rpm
- Flow controller setting 600 gpm

Given these plant conditions, which ONE of these actions is required for RCIC, including the reason?

A. IMMEDIATELY secure RCIC. RCIC is not injecting into the Rx Vessel.

B. Continue to run RCIC. Raise discharge pressure by throttling the discharge valve to restore RPV level.

C. Continue to run RCIC. Raise turbine speed by placing the flow controller in MANUAL and adjusting the flow controller to restore RPV level.

D. IMMEDIATELY secure RCIC. The low suction pressure trip failed.

Proposed Answer: C

Explanation (Optional):

A: IMMEDIATELY secure RCIC. RCIC is not injecting into the Rx Vessel. **INCORRECT**, Discharge pressure is not sufficient to overcome reactor pressure, however the ability to take manual control of the system to raise discharge pressure still exists. No immediate need to secure RCIC as pump speed is above the minimum for oil pressure and exhaust line check valve concerns.

B: Continue to run RCIC. Raise discharge pressure by throttling the discharge valve to restore RPV level. **INCORRECT,** Discharge pressure is not sufficient to overcome reactor pressure, however the ability to take manual control of the system to raise discharge pressure still exists. If the discharge valve is throttled, normally the system in auto will raise speed to compensate for the reduced flow rate, however, flow setting is set at 600, so the flow controller in automatic is not functioning correctly and manual control is required to raise discharge flow.

C: Continue to run RCIC. Raise turbine speed by placing the flow controller in MANUAL and adjusting the flow controller to restore RPV level. **CORRECT,** Discharge pressure is not sufficient to overcome reactor pressure, however the ability to take manual control of the system to raise discharge pressure still exists. If the discharge valve is throttled, normally the system in auto will raise speed to compensate for the reduced flow rate, however, flow setting is set at 600, so the flow controller in automatic is not functioning correctly and manual control is required to raise discharge flow. With vessel level lowering and HPCI and feed water not available, every reasonable attempt to inject with RCIC should be taken.

D: IMMEDIATELY secure RCIC. The low suction pressure trip failed. **INCORRECT,** no indication of a system trip exists, also suction pressure is 15 psig, well above the trip setpoint of < 20" Hg VAC 2 second td

Technical Reference(s): OP-SO.BD-001, Section 3.0 (Attach if not previously provided)

Proposed References to be provided to applicants during examination: none

Learning Objective: RCIC00E022, Given RCIC turbine control system failures, evaluate and determine the effect on the RCIC system. (As available)

Question Source: Bank #

Modified Bank # (Note changes or attach parent)

New X

Question History:

Question Cognitive Level: Memory or Fundamental Knowledge

Comprehension or Analysis X

10 CFR Part 55 Content: 55.41 7, 8

55.43

Comments:

Facility: Hope Creek

Vendor: GE

Exam Date: 2012

Exam Type: RO

Examination Outline Cross-reference:	Level	RO	SRO
	Tier #	2	
	Group #	2	
	K/A #	215001 K1.08	
	Importance Rating	2.5	

Knowledge of the physical connections and/or cause- effect relationships between TRAVERSING IN-CORE PROBE and the following: Reactor pressure vessel: (Not-BWR1)

Question: RO #27

- A TIP System trace is being performed by the On-duty Reactor Engineer
- An 'A' Channel NSSSS manual isolation signal is received

In an attempt to isolate the related RPV penetrations, what is the automatic TIP system response (if any)?

A. No automatic actions occur when only an 'A' Channel NSSSS isolation signal is received.

B. The TIP Shear Valve automatically fires to cut the detector cable and seal the guide tube.

C. The TIP Guide Tube Ball Valve automatically closes, cutting the detector cable and sealing the guide tube.

D. The TIP detectors not in the "in-shield" position will automatically withdraw to their "in-shield" position and the TIP Guide Tube Ball Valves automatically close.

Proposed Answer: D

Explanation (Optional):

A: No automatic actions occur when only an 'A' Channel NSSSS isolation signal is received. **INCORRECT,** manual initiation of NSSSS Channel "A" will cause isolation of affected systems, including TIP. Per OP-SO.SM-001

B: The TIP Shear Valve automatically fires to cut the detector cable and seal the guide tube. **INCORRECT,** the Shear Valves must be manually initiated.

C: The TIP Guide Tube Ball Valve automatically closes, cutting the detector cable and sealing the guide tube. **INCORRECT -** the Ball Valve will not close with the cable inside the valve.

D: The TIP detectors not in the "in-shield" position will automatically withdraw to their "in-shield" position and the TIP Guide Tube Ball Valves automatically close. **CORRECT,** manual initiation of

NSSSS Channel "A" will cause isolation of affected systems, including TIP.

Technical Reference(s): NOH01TIPS00. OP-SO.SM-001 (Attach if not previously provided)

Proposed References to be provided to applicants during examination: none

Learning Objective: TIPS00E006, From memory explain the response of the TIP System following the receipt of an isolation signal from the Nuclear Steam Supply Shutoff System. (As available)

Question Source: Bank # 53710

Modified Bank # (Note changes or attach parent)

New

Question History:

Question Cognitive Level: Memory or Fundamental Knowledge X

Comprehension or Analysis

10 CFR Part 55 Content: 55.41 2, 6

55.43

Comments:

Facility: Hope Creek

Vendor: GE

Exam Date: 2012

Exam Type: RO

Examination Outline Cross-reference:	Level	RO	SRO
	Tier #	2	
	Group #	2	
	K/A #	286000 K2.02	
	Importance Rating	2.9	

Knowledge of electrical power supplies to the following: Pumps (Fire Protection)

Question: RO #28

Given:

- The plant is operating at 100% power
- A loss of MCC 00B590 occurs
- There is no fire

Based on this, it will be necessary to:

A. secure the motor driven fire pump to prevent pumping down the fire water storage tank.

B. secure the diesel driven fire pump to prevent pumping down the fire water storage tank.

C. manually start the motor driven fire pump due to a loss of the diesel driven fire pump battery chargers, in the event of a fire.

D. manually start the diesel fire pump due to a loss of the motor driven fire pump power supply, in the event of a fire.

Proposed Answer: B

Explanation (Optional):

A: secure the motor driven fire pump to prevent pumping down the fire water storage tank, **INCORRECT,** with the loss of the 00B590 MCC the motor driven fire pump has no power supply

B: secure the diesel driven fire pump to prevent pumping down the fire water storage tank, **CORRECT,** -The diesel driven fire pump auto starts on a loss of power to the motor driven fire pump. Since there is no fire, the fire water storage tank is being pumped down due to the discharge relief valve lifting with no system flow demand.

C: manually start the electric fire pump due to a loss of the diesel driven fire pump battery chargers, **INCORRECT,** The battery chargers for the diesel driven fire pump are powered from 1AJ483

D: manually start the diesel fire pump due to a loss of the motor driven fire pump power supply, **INCORRECT,** - The diesel driven fire pump auto starts on a loss of power to the motor driven fire pump.

Technical Reference(s): E-0013 sht 2, OP-AR.QK-0002 (Attach if not previously provided)

Proposed References to be provided to applicants during examination: none

Learning Objective: FIRPROE008, Summarize the effect that a loss of power would have on the following: Electric Motor Driven Fire Pump. Diesel Driven Fire Pump. (As available)

Question Source: Bank # 111405

Modified Bank # (Note changes or attach parent)

New

Question History:

Question Cognitive Level: Memory or Fundamental Knowledge

Comprehension or Analysis X

10 CFR Part 55 Content: 55.41 8

55.43

Comments:

Facility: Hope Creek

Vendor: GE

Exam Date: 2012

Exam Type: RO

Examination Outline Cross-reference:	Level	RO	SRO
	Tier #	2	
	Group #	2	
	K/A #	204000 K3.02	
	Importance Rating	3.1	

Knowledge of the effect that a loss or malfunction of the REACTOR WATER CLEANUP SYSTEM will have on following: Reactor water level

Question: RO #29

Given:

- Core Alterations are in progress
- RHR Loop "A" is in Shutdown Cooling
- RPV Coolant Temperature is 100° F
- RHR Loop "B" is in Fuel Pool Cooling Assist
- Both Fuel Pool Cooling Pumps are C/T for repairs
- RWCU is in service with blowdown flow at 25 gpm for level control

Then:

- A controller malfunction causes blowdown valve (BG-HV-F033) to stroke full open.

With NO Operation action taken, what will be the effect from the conditions above?

A. Cavity level will continue to lower until RWCU isolates when level reaches -38".

B. Cavity level will continue to lower until RWCU isolates when level reaches -129".

C. Cavity level will lower until the weirs are uncovered, then will remain at the level of the weirs.

D. Skimmer Surge Tank level will lower until the weirs are uncovered then will remain at the level of the weirs.

Proposed Answer: A

Explanation (Optional):

A: Cavity level will continue to lower until RWCU isolates when level reaches -38". **CORRECT,** RWCU takes a suction from the bottom head and receives an isolation signal at -38". This isolation is not part of the SDC NSSSS isolations that are defeated per IO-5.

B: Cavity level will continue to lower until RWCU isolates when level reaches -129". **INCORRECT,** RWCU takes a suction from the bottom head and receives an isolation signal at -38". This isolation is not part of the SDC NSSSS isolations that are defeated per IO-5.

C: Cavity level will lower until the weirs are uncovered, then will remain at the level of the weirs. **INCORRECT,** The mass loss is from the RPV. Cavity weirs only direct water to the Skimmer Surge Tank.

D: Skimmer Surge Tank level will lower until the weirs are uncovered then will remain at the level of the weirs. **INCORRECT,** The Skimmer Surge Tank receives water from the weirs. When level drops below the weirs, tank level will continue to lower and be maintained by makeup from CST.

Technical Reference(s): OP-SO.BG-001, OP-IO.ZZ-005, OP-GP.SM-001, M-44-1 Sht 1 (Attach if not previously provided)

Proposed References to be provided to applicants during examination: none

Learning Objective: RWCU00E018, Given a set of plant conditions evaluate the effects of RWCU System blowdown operation on the RHX and NRHX's IAW the RWCU System Lesson Plan. (As available)

Question Source: Bank # 56398

Modified Bank # (Note changes or attach parent)

New

Question History:

Question Cognitive Level: Memory or Fundamental Knowledge

Comprehension or Analysis X

10 CFR Part 55 Content: 55.41 3, 7

55.43

Comments:

Facility: Hope Creek

Vendor: GE

Exam Date: 2012

Exam Type: RO

Examination Outline Cross-reference:	Level	RO	SRO
	Tier #	2	
	Group #	2	
	K/A #	202002 K4.06	
	Importance Rating	3.1	

Knowledge of RECIRCULATION FLOW CONTROL SYSTEM design feature(s) and/or interlocks which provide for the following: Recirculation pump adequate NPSH: Plant-Specific

Question: RO #30

Given :

- The plant was operating at 98% power when a pressure transient occurred, causing RPV pressure to peak at 1050 psig.
- Reactor pressure is now under control with H SRV cycling.
- RPV level reached -20 inches and is recovering to normal.
- NO operator actions have been taken.

Which of the following correctly describes the status of the Reactor Recirculation Pumps for the current conditions?

Both Recirculation Pumps:

A. have tripped off.

B. are running at 30 % speed.

C. are running at 45 % speed.

D. are running at the electrical low speed stops.

Proposed Answer: B

Explanation (Optional):

A: have tripped off. **INCORRECT,** RPV pressure reached 1050 psig NOT 1071 psig. RPV level reached -20 inches NOT -38". Recirc pump RPT Breakers trip at 1071 psig/ -38".

B: are running at 30 % speed. **CORRECT,** 1050 psig will cause reactor scram but not ATWS-RPT actuation at 1071. 30 % speed limiter (full runback) is sealed-in.

C: are running at 45 % speed. **INCORRECT,** 1050 psig will cause reactor scram but not ATWS-RPT actuation at 1071. 30 % speed limiter (full runback) is sealed-in.

D: are running at the electrical low speed stops. **INCORRECT,** 1050 psig will cause reactor scram but not ATWS-RPT actuation at 1071. 30 % speed limiter (full runback) is sealed-in. Manual operator action needed to reduce to minimum speed.

Technical Reference(s): NOH01RECCON, OP-SO.BB-002 (Attach if not previously provided)

Proposed References to be provided to applicants during examination: none

Learning Objective: RECCONE015 , Explain the purpose of each recirc pump runback and list the signals that will generate each runback IAW available control room references (As available)

Question Source: Bank # 55914

Modified Bank # (Note changes or attach parent)

New

Question History:

Question Cognitive Level: Memory or Fundamental Knowledge X

Comprehension or Analysis

10 CFR Part 55 Content: 55.41 6, 7

55.43

Comments:

Facility: Hope Creek

Vendor: GE

Exam Date: 2012

Exam Type: RO

Examination Outline Cross-reference:	Level	RO	SRO
	Tier #	2	
	Group #	2	
	K/A #	241000 K5.04	
	Importance Rating	3.3	

Knowledge of the operational Implications of the following concepts as they apply to REACTOR/TURBINE PRESSURE REGULATING SYSTEM : Turbine inlet pressure vs. reactor pressure

Question: RO #31

Which one of the following describes the pressure rise at the Main Turbine inlet and reactor steam dome as power is increased from main generator synchronization to full rated thermal power?

Assume turbine loading is at a constant ramp rate.

Main Turbine inlet pressure rise is _____ and reactor steam dome pressure rise is _____.

A. Linear; Linear.

B. Linear; Non-Linear.

C. Non-Linear; Linear.

D. Non-Linear; Non-Linear.

Proposed Answer: B

Explanation (Optional):

A: Linear; Linear. **INCORRECT,** Main turbine inlet pressure rise is linear. Reactor pressure rise is not a direct linear correlation, it is non-linear.

B: Linear; Non-Linear. **CORRECT,** Linear; Non-Linear. Correct. Main turbine inlet pressure rises from 905 to 935 psig at 3.33% steam flow to 1psig rise. Rx pressure rises from 905 to 1005 psig. Reactor pressure rises higher due to the increased differential pressure caused by steam line flow increases.

C: Non-Linear; Linear. **INCORRECT,** Main turbine inlet pressure rise is linear. Reactor pressure rise is not a direct linear correlation, it is non-linear.

D: Non-Linear; Non-Linear. **INCORRECT,** Main turbine inlet pressure rise is linear. Reactor pressure rise is not a direct linear correlation, it is non-linear.

Technical Reference(s): NOH01EHCLOG (Attach if not previously provided)

Proposed References to be provided to applicants during examination: none

Learning Objective: EHCLOGE002, Given plant conditions evaluate the cause-effect relationship between the pressure regulating system and the following: Reactor Power, Reactor Pressure, Steam Flow, Reactor Water Level (As available)

Question Source: Bank # 80590

Modified Bank # (Note changes or attach parent)

New

Question History: NRC 2003

Question Cognitive Level: Memory or Fundamental Knowledge

Comprehension or Analysis X

10 CFR Part 55 Content: 55.41 5, 7,14

55.43

Comments:

Facility: Hope Creek

Vendor: GE

Exam Date: 2012

Exam Type: RO

Examination Outline Cross-reference:	Level	RO	SRO
	Tier #	2	
	Group #	2	
	K/A #	201002 K6.01	
	Importance Rating	2.5	

Knowledge of the effect that a loss or malfunction of the following will have on the REACTOR MANUAL CONTROL SYSTEM : Select matrix power

Question: RO #32

Given:

- The plant is performing the control rod exercise surveillance
- The Nuclear Control Operator (RO) selects control rod 34-19 on the rod select matrix
- Only one half of the selected rod push button illuminates when depressed
- The 'ACTIVITY CONTROLS DISAGREE" light is illuminated

Which of the following describes what has failed and how that affects the ability to move control rods?

A. The selected control rod activity control card is in the scan mode and rod motion is allowed.

B. The selected control rod activity control card is in the scan mode and rod motion is NOT allowed.

C. Only one of the two RMCS transmitter cards has successfully selected the control rod and rod motion is allowed.

D. Only one of the two RMCS transmitter cards has successfully selected the control rod and rod motion is NOT allowed.

Proposed Answer: D

Explanation (Optional):

A: The selected control rod activity control card is in the scan mode and rod motion is allowed. **INCORRECT**, this is a transmitter card failure

B: The selected control rod activity control card is in the scan mode and rod motion is NOT allowed. **INCORRECT**, this is a transmitter card failure

C: Only one of the two RMCS transmitter cards has successfully selected the control rod and rod motion is allowed. **INCORRECT**, this is a transmitter card failure

D: Only one of the two RMCS transmitter cards has successfully selected the control rod and rod motion is NOT allowed. **CORRECT**, this is a transmitter card failure, the ACTIVITY CONTROLS DISAGREE will prevent rod motion. Only one of the two RMCS transmitter cards has successfully selected the control rod and rod motion is not allowed.

Technical Reference(s): OP-SO.SF-001 (Attach if not previously provided)

Proposed References to be provided to applicants during examination: none

Learning Objective: MANCONE003, Given a labeled diagram/drawing of, or access to, the Reactor Manual Control System controls/indication bezel, summarize the following: The function of each indicator. The condition which will cause the indicator to light or extinguish. The effect of each control on the Reactor Manual Control System. The conditions or permissives required for the control switches to perform their intended function. (As available)

Question Source: Bank # 53362

Modified Bank # (Note changes or attach parent)

New

Question History:

Question Cognitive Level: Memory or Fundamental Knowledge

Comprehension or Analysis X

10 CFR Part 55 Content: 55.41 2, 6

55.43

Comments:

Facility: Hope Creek

Vendor: GE

Exam Date: 2012

Exam Type: RO

Examination Outline Cross-reference:	Level	RO	SRO
	Tier #	2	
	Group #	2	
	K/A #	239001 A1.08	
	Importance Rating	3.8	

Ability to predict and/or monitor changes in parameters associated with operating the MAIN AND REHEAT STEAM SYSTEM controls including: Reactor pressure

Question: RO #33

During a reactor plant startup Main Turbine Sealing Steam will automatically transfer from Auxiliary Steam at approximately 60 psig reactor pressure and rising.

This transfer is accomplished by:

A. 4th stage extraction becoming available to the Steam Seal Evaporator.

B. The Auxiliary Steam Header PCV (PV-2038) closing as the Steam Seal Evaporator feeds the sealing header.

C. Flow from the turbine valve stem leak-off (MSV, TCV, CIV, and Bypass Valves) becoming sufficient to supply the seal header.

D. Turbine seals being supplied by Main Steam via H. P. turbine seal leak-off as the HP Turbine Shell pressurizes during shell warming (60-100 psig).

Proposed Answer: B

Explanation (Optional):

A: 4th stage extraction becoming available to the Steam Seal Evaporator. **INCORRECT,** extraction steam comes from the #4 feed water heater which gets supplied from the 8th stage low pressure steam as shown on P&IDS M-01/M-02/M-29

B: The Auxiliary Steam Header PCV (PV-2038) closing as the Steam Seal Evaporator feeds the sealing header. **CORRECT**, Per IOP-003 step 5.3.22, "Main Turbine Sealing Steam will automatically transfer from Auxiliary Steam to Main Steam at approximately 60 psig."

C: Flow from the turbine valve stem leak-off (MSV, TCV, CIV, and Bypass Valves) becoming sufficient to supply the seal header. **INCORRECT,** steam seal leak-off is directed back to the main condenser as shown on P&IDS M-01/M-29

D: Turbine seals being supplied by Main Steam via H. P. turbine seal leak-off as the HP Turbine Shell pressurizes during shell warming (60-100 psig) **INCORRECT,** seal leak-off is directed either back to the main condenser, to the #3 feed water heaters, or the steam packing exhauster NOT to the sealing steam header as shown on P&ID M-29

Technical Reference(s): OP-IO.ZZ-003, NOH01SEALSTC, (Attach if not previously provided)

P&IDS M-01/M-02/M-29

Proposed References to be provided to applicants during examination: none

Learning Objective: SEALSTE006, Given plant conditions, explain the sources of evaporator heating steam. (As available)

Question Source: Bank # 55017

Modified Bank # (Note changes or attach parent)

New

Question History:

Question Cognitive Level: Memory or Fundamental Knowledge X

Comprehension or Analysis

10 CFR Part 55 Content: 55.41 7

55.43

Comments:

Facility: Hope Creek

Vendor: GE

Exam Date: 2012

Exam Type: RO

Examination Outline Cross-reference:	Level	RO	SRO
	Tier #	2	
	Group #	2	
	K/A #	288000 A2.05	
	Importance Rating	2.6	

Ability to (a) predict the impacts of the following on the PLANT VENTILATION SYSTEMS ; and (b) based on those predictions, use procedures to correct, control, or mitigate the consequences of those abnormal conditions or operations: Extreme outside weather conditions: Plant-Specific

Question: RO #34

Given:

- The plant is operating at 100% power
- RCIC has just been placed in service for a quarterly surveillance
- Outside air temperature is 5°F

Then:

- Boiler operator reports a trip of the Auxiliary Boiler
- Heating steam header pressure is dropping rapidly

Roughly 10 minutes later, the Plant operator reports:

- OHA B1A1 RCIC Turbine Trip in alarm
- FC-HV-F007 Inboard Steam Supply Isolation valve going closed
- FC-HV-F008 Outboard Steam Supply Isolation valve going closed

What is the cause of the present RCIC condition?

A. Torus Room High Temperature.

B. RCIC Pump Room High Temperature.

C. RCIC Steam Pipe Area High High Temperature.

D. RCIC Room Ventilation Duct High Differential Temperature.

Proposed Answer: D

Explanation (Optional):

A: Torus Room High Temperature. **INCORRECT**, No OHAs are in that support this condition. During boiler trips and subsequent loss of heating steam to RBVS the reactor building supply temperatures will lower. The reduction in supply temperature may cause the differential temperature isolations for HPCI and RCIC to be challenged. RCIC system trips on any isolation signal and high differential temperature for RCIC room ventilation can/does occur with low outside air temperature and elevated room temperatures (RCIC in service for surveillance), Also requires entry into AB.MISC-003 Loss of Auxiliary Steam, Condition A for temperature < 40°F. The actions listed are for Condition B for temperatures above 40°F.

B: RCIC Pump Room High Temperature. **INCORRECT,** No other OHAs are in that support this condition. During boiler trips and subsequent loss of heating steam to RBVS the reactor building supply temperatures will lower. The reduction in supply temperature may cause the differential temperature isolations for HPCI and RCIC to be challenged. RCIC system trips on any isolation signal and high differential temperature for RCIC room ventilation can/does occur with low outside air temperature and elevated room temperatures (RCIC in service for surveillance), Also requires entry into AB.MISC-003 Loss of Auxiliary Steam, Condition A for temperature < 40°F. The actions listed are for Condition B for temperatures above 40°F.

C: RCIC Steam Pipe Area High High Temperature. **INCORRECT,** During boiler trips and subsequent loss of heating steam to RBVS the reactor building supply temperatures will lower. The reduction in supply temperature may cause the differential temperature isolations for HPCI and RCIC to be challenged. RCIC system trips on any isolation signal and high differential temperature for RCIC room ventilation can/does occur with low outside air temperature and elevated room temperatures (RCIC in service for surveillance), Also requires entry into AB.MISC-003 Loss of Auxiliary Steam, Condition A for temperature < 40°F. The actions listed are for Condition B for temperatures above 40°F.

D: RCIC Room Ventilation Duct High Differential temperature. **CORRECT,** During boiler trips and subsequent loss of heating steam to RBVS the reactor building supply temperatures will lower. The reduction in supply temperature may cause the differential temperature isolations for HPCI and RCIC to be challenged. RCIC system trips on any isolation signal and high differential temperature for RCIC room ventilation can/does occur with low outside air temperature and elevated room temperatures (RCIC in service for surveillance), requires entry into AB.MISC-003 Loss of Auxiliary Steam, Condition A, for temperature < 40°F.

Technical Reference(s): HC.OP-AB.MISC-003, Note 3. NOH04RCIC00, (Attach if not previously provided)

Proposed References to be provided to applicants during examination: none

Learning Objective: ABMSC3E004, Explain the reasons for how plant/system parameters respond when implementing Loss of Auxiliary Steam. (As available)

Question Source: Bank # 118792

Modified Bank # (Note changes or attach parent)

New

Question History:

Question Cognitive Level:	Memory or Fundamental Knowledge		
	Comprehension or Analysis		X
10 CFR Part 55 Content:	55.41	7, 10	
	55.43		

Comments:

Facility: Hope Creek

Vendor: GE

Exam Date: 2012

Exam Type: RO

Examination Outline Cross-reference:	Level	RO	SRO
	Tier #	2	
	Group #	2	
	K/A #	201001 A3.03	
	Importance Rating	2.7	

Ability to monitor automatic operations of the CONTROL ROD DRIVE HYDRAULIC SYSTEM including: System pressure

Question: RO #35

The CRD system is in operation with the reactor operating at 43% power. The CRD flow control valve is in automatic. The RO takes the Drive Water Pressure Control Throttle Valve (HV-F003) to open for two seconds.

Which one of the following describes how parameters will stabilize when the transient is over?

A. Drive water Δp will rise; Cooling water flow will lower.

B. Drive water Δp will rise; Cooling water flow will remain the same.

C. Drive water Δp will lower; Cooling water flow will lower.

D. Drive water Δp will lower; Cooling water flow will remain the same.

Proposed Answer: D

Explanation (Optional):

A: Drive water Δp will rise; Cooling water flow will lower. **INCORRECT**, Δp will lower as the F003 (PCV) is opened and the FCV will restore flow to same value system flow should remain constant

B: Drive water Δp will rise; Cooling water flow will remain the same. **INCORRECT,** Δp will lower as the F003 (PCV) is opened

C: Drive water Δp will lower; Cooling water flow will lower. **INCORRECT,** the FCV will restore flow to same value system flow should remain constant

D: Drive water Δp will lower; Cooling water flow will remain the same. **CORRECT,** as the F003 (PCV) will lower Δp, and initially raise flow. The FCV will respond and restore normal flow to the system.

Technical Reference(s): NOH04CRDYD (Attach if not previously provided)

Proposed References to be provided to applicants during examination: none

Learning Objective: CRDHYDE007, Given a drawing, explain how drive/cooling water differential pressure is controlled. (As available)

Question Source: Bank # 53508

Modified Bank # (Note changes or attach parent)

New

Question History:

Question Cognitive Level: Memory or Fundamental Knowledge

Comprehension or Analysis X

10 CFR Part 55 Content: 55.41 2, 6

55.43

Comments:

Facility: Hope Creek

Vendor: GE

Exam Date: 2012

Exam Type: RO

Examination Outline Cross-reference:	Level	RO	SRO
	Tier #	2	
	Group #	2	
	K/A #	226001 A4.15	
	Importance Rating	3.6	

Ability to manually operate and/or monitor in the control room: Suppression chamber pressure: Mark-I-II (RHR/LPCI: Containment Spray Mode)

Question: RO #36

During a transient, Suppression Chamber Spray was initiated due to:

- Suppression Chamber Pressure 9.0 psig
- Suppression Pool Level 102"
- Drywell Pressure 7 psig
- Drywell Temperature 228°F

Conditions degrade and the order to place Drywell Spray in service has been given to the RO.

(1) What valves must be realigned to get into Drywell Spray

AND

(2) When is Drywell Spray required to be secured?

A. (1) Close the HV-F024 Loop Test Return valve AND HV-F027 Suppression Chamber Spray valve, then open HV-F016 Outboard Containment Spray valve AND HV-F021 Inboard Containment Spray valve.
(2) Secure Drywell Spray when drywell pressure approaches 0 psig.

B. (1) Close the HV-F024 Loop Test Return valve OR HV-F027 Suppression Chamber Spray valve, then open HV-F016 Outboard Containment Spray valve OR HV-F021 Inboard Containment Spray valve.
(2) Secure Drywell Spray when drywell pressure approaches 0 psig.

C. (1) Close the HV-F024 Loop Test Return valve AND HV-F027 Suppression Chamber Spray valve, then open HV-F016 Outboard Containment Spray valve AND HV-F021 Inboard Containment Spray valve.
(2) Secure Drywell Spray when suppression chamber pressure approaches 0 psig.

D. (1) Close the HV-F024 Loop Test Return valve OR HV-F027 Suppression Chamber Spray valve, then open HV-F016 Outboard Containment Spray valve OR HV-F021 Inboard Containment Spray valve.
(2) Secure Drywell Spray when suppression chamber pressure approaches 0 psig.

Proposed Answer: A

Explanation (Optional):

A: Close the HV-F024 Loop Test Return valve AND HV-F027 Suppression Chamber Spray valve, then open HV-F016 Outboard Containment Spray valve AND HV-F021 Outboard Containment Spray valve. When drywell pressure approaches 0 psig. **CORRECT,** per OP-AB.ZZ-0001 Att 2. to get into drywell spray would require ensuring F024 and F027 are closed and then open both the F016 and F021, per EOP-102 retainment override PCC-1, IF: Drywell sprays have been initiated, THEN BEFORE drywell pressure reaches 0 psig, TERMINATE drywell sprays.

B: Close the HV-F024 Loop Test Return valve OR HV-F027 Suppression Chamber Spray valve, then open HV-F016 Outboard Containment Spray valve OR HV-F021 Outboard Containment Spray valve. When drywell pressure approaches 0 psig. **INCORRECT,** per OP-AB.ZZ-0001 Att 2. to get into drywell spray would require ensuring F024 and F027 are closed and then open BOTH the F016 and F021, per EOP-102 retainment override PCC-1, IF: Drywell sprays have been initiated, THEN BEFORE drywell pressure reaches 0 psig, TERMINATE drywell sprays.

C: Close the HV-F024 Loop Test Return valve AND HV-F027 Suppression Chamber Spray valve, then open HV-F016 Outboard Containment Spray valve AND HV-F021 Outboard Containment Spray valve. When suppression chamber pressure approaches 0 psig. **INCORRECT**, per OP-AB.ZZ-0001 Att 2. to get into drywell spray would require ensuring F024 and F027 are closed and then open both the F016 and F021, per EOP-102 retainment override PCC-1, IF: Drywell sprays have been initiated, THEN BEFORE drywell pressure reaches 0 psig, TERMINATE drywell sprays. If suppression chamber sprays were still in service, then would terminate on suppression chamber pressure before 0 psig.

D: Close the HV-F024 Loop Test Return valve OR HV-F027 Suppression Chamber Spray valve, then open HV-F016 Outboard Containment Spray valve OR HV-F021 Outboard Containment Spray valve. When suppression chamber pressure approaches 0 psig. **INCORRECT,** per OP-AB.ZZ-0001 Att 2. to get into drywell spray would require ensuring F024 and F027 are closed and then open BOTH the F016 and F021, per EOP-102 retainment override PCC-1, IF: Drywell sprays have been initiated, THEN BEFORE drywell pressure reaches 0 psig, TERMINATE drywell sprays. If suppression chamber sprays were still in service, then would terminate on suppression chamber pressure before 0 psig.

Technical Reference(s): EOP-102, OP-AB.ZZ-001 Att. 2/3 (Attach if not previously provided)

Proposed References to be provided to applicants during examination: none

Learning Objective: RHRSYSE014, Given a copy/mimic of the RHR System controls on 10C650A, predict proper RHR System response during the LPCI mode of operation to include the following, IAW available control room references: (As available)

f. Determine the operator actions required to initiate Torus/containment spray during LPCI mode of operation, IAW available control room references.

Question Source: Bank #

Modified Bank # (Note changes or attach parent)

New X

Question History:

Question Cognitive Level: Memory or Fundamental Knowledge

Comprehension or Analysis X

10 CFR Part 55 Content: 55.41 7, 8

55.43

Comments:

Facility: Hope Creek

Vendor: GE

Exam Date: 2012

Exam Type: RO

Examination Outline Cross-reference:	Level	RO	SRO
	Tier #	2	
	Group #	2	
	K/A #	259001 2.4.2	
	Importance Rating	4.5	

Emergency Procedures / Plan: Knowledge of system set points, interlocks and automatic actions associated with EOP entry conditions.

Question: RO #37

Given:

- The plant is starting up following a refueling outage IAW HC.OP-IO.ZZ-003
- Reactor Power is 13%
- The Mode Switch is in RUN
- Preparations are being made to synchronize the Main Generator
- A RFPT is in service feeding the vessel and B RFPT is on min flow, per OP-SO.AE-001
- A & B PCPs are in service
- A & B SCPs are in service
- The Main Turbine is @ 1800 rpm

A Bailey card malfunction causes AB-HV-1006 RFPT HP STM SPLY ISLN MOV to fail shut.

Since HV-1006 can NOT be reopened what actions (if any) will be required?

A. NO additional actions are required because reactor vessel level lowers and returns to normal as feedwater flow is restored.

B. LOCK the mode switch in Shutdown and enter EOP-101 RPV Control ONLY.

C. LOCK the mode switch in Shutdown and enter AB.ZZ-000 Reactor Scram ONLY.

D. LOCK the mode switch in Shutdown and enter EOP-101 RPV Control and AB.ZZ-000 Reactor Scram, with EOP-101 taking priority.

Proposed Answer: D

Explanation (Optional):

A: NO additional actions are required because reactor vessel level lowers and returns to normal as feedwater flow is restored. **INCORRECT,** The 'A' RFPT governor valve ramps open in an attempt to maintain RFPT speed. Since no steam is available to the RFPT, feedwater flow is lost, and the Reactor scrams on low level.

B: LOCK the mode switch in Shutdown and enter EOP-101 RPV Control ONLY. **INCORRECT**, Since no steam is available to the RFPT, feedwater flow is lost, and the Reactor scrams on low level. Will also require entry into AB.ZZ-000 for the reactor scram, however EOP-101 takes precedent/priority

C: LOCK the mode switch in Shutdown and enter AB.ZZ-000 Reactor Scram ONLY. **INCORRECT,** The 'A' RFPT governor valve ramps open in an attempt to maintain RFPT speed. Since no steam is available to the RFPT, feedwater flow is lost, and the Reactor scrams on low level. Requires entry into AB.ZZ-000 for the reactor scram, and EOP-101, with EOP-101 taking priority.

D: LOCK the mode switch in Shutdown and enter EOP-101 RPV Control and AB.ZZ-000 Reactor Scram. **CORRECT,** The 'A' RFPT governor valve ramps open in an attempt to maintain RFPT speed. Since no steam is available to the RFPT, feedwater flow is lost, and the reactor is scrammed on low level. Requires entry into AB.ZZ-000 for the reactor scram, and EOP-101, with EOP-101 taking priority.

Technical Reference(s): EOP-101, AB.ZZ-000 (Attach if not previously provided)

Proposed References to be provided to applicants during examination: none

Learning Objective: FEED00E018, From memory, summarize/identify the sources of steam to the RFPT's and when each source is used, IAW available Control Room References. EO101PE002, State the three entry conditions for the Reactor/Pressure Vessel (RPV) Control Emergency Operating Procedure. (As available)

Question Source: Bank #

Modified Bank # (Note changes or attach parent)

New X

Question History:

Question Cognitive Level: Memory or Fundamental Knowledge

Comprehension or Analysis X

10 CFR Part 55 Content: 55.41 7, 10

55.43

Comments:

Facility: Hope Creek

Vendor: GE

Exam Date: 2012

Exam Type: RO

Examination Outline Cross-reference:	Level	RO	SRO
	Tier #	2	
	Group #	2	
	K/A #	216000 A1.04	
	Importance Rating	2.6	

Ability to predict and/or monitor changes in parameters associated with operating the NUCLEAR BOILER INSTRUMENTATION controls including: System venting

Question: RO #38

A Reactor cooldown/depressurization from normal operations is in progress.

Which RPV level indication below will have the LEAST accurate direct reading when the reactor depressurization is complete and why? (actual level –vs- indicated level)

A. Narrow Range, because it is calibrated hot and as the reactor depressurizes the disparity to actual level is greater when compared to the disparity of wide range.

B. Wide Range, because it is calibrated hot and as the reactor depressurizes the disparity to actual level is greater when compared to the disparity of narrow range.

C. Upset Range, because it is calibrated hot and as the reactor depressurizes the disparity to actual level is greater when compared to the disparity of narrow AND wide range.

D. Shutdown Range, because it is calibrated cold and as the reactor depressurizes the disparity to actual level is greater when compared to hot conditions.

Proposed Answer: B

Explanation (Optional):

A: Narrow Range, because it is calibrated hot and as the reactor depressurizes the disparity to actual level is greater when compared to the disparity of wide range. **INCORRECT,** Narrow Range is calibrated for saturated conditions at 1000 psig and as reactor pressure/temperature are reduced the disparity of actual level to indicated level widens, but not as much as Wide Range. See temperature compensation curves from IOP-0004, Att 7.

B: Wide Range, because it is calibrated hot and as the reactor depressurizes the disparity to actual level is greater when compared to the disparity of narrow range. **CORRECT**, Wide Range is calibrated for saturated conditions at 1000 psig and as reactor pressure/temperature are reduced

the disparity of actual level to indicated level widens much further than Narrow Range. See temperature compensation curves from IOP-0004, Att 7.

C: Upset Range, because it is calibrated hot and as the reactor depressurizes the disparity to actual level is greater when compared to the disparity of narrow AND wide range. **INCORRECT,** Upset Range is calibrated for saturated conditions at 1000 psig, however, due to it's scale 0-180", the disparity of actual level to indicated level during cooldown/depressurization is negligible. See temperature compensation curves from IOP-0004, Att 7.

D: Shutdown Range, because it is calibrated cold and as the reactor depressurizes the disparity to actual level is greater when compared to hot conditions. **INCORRECT,** Shutdown Range is calibrated for 120ºF, 0 psig, whereas Wide Range is calibrated for saturated conditions at 1000 psig. See temperature compensation curves from IOP-0004, Att 7.

Technical Reference(s): NOH04RXINSTC, IOP-0004 (Attach if not previously provided)

Proposed References to be provided to applicants during examination: none

Learning Objective: RXINSTE018, Given changes in the following parameters, evaluate the affect on each RPV level indication: a. Reactor Pressure, b. Drywell Temperature, c. Steam Flow (As available)

Question Source: Bank #

Modified Bank # (Note changes or attach parent)

New X

Question History:

Question Cognitive Level: Memory or Fundamental Knowledge

Comprehension or Analysis X

10 CFR Part 55 Content: 55.41 7, 14

55.43

Comments:

Facility: Hope Creek

Vendor: GE

Exam Date: 2012

Exam Type: RO

Examination Outline Cross-reference:	Level	RO	SRO
	Tier #	1	
	Group #	1	
	K/A #	600000 AK2.03	
	Importance Rating	2.5	

Knowledge of the operation applications of the following concepts as they apply to Plant Fire On Site and the following: Motors

Question: RO #39

Given:

- The plant is operating at 100%
- A fire breaks out in the switchgear of the 10A110 bus in the Turbine Building

Which fire suppression systems can be activated from the Main Control Room in response to this fire?

1. The 4 ton CO_2 System
2. The Motor-Driven Fire Water Pump
3. The HALON System
4. The Diesel-Driven Fire Water Pump

A. 1 and 3

B. 3 and 4

C. 1 and 2

D. 2 and 4

Proposed Answer: D

Explanation (Optional):

A: 1 AND 3, (CO_2 and HALON System) **INCORRECT**, The 4 Ton Cardox system alarms in the Main Control Room via the 10C671 panel and the Fire Computer and can not be activated (activated) from the Main Control Room. The HALON system can be activated from the Main Control Room, however the HALON system is for fire suppression in the Main Control Room only and has no affect on the fire in the Turbine Building.

B: 3 AND 4, (HALON System and Diesel-Driven Fire Water Pump) **INCORRECT**, The HALON system can be activated from the Main Control Room, however the HALON system is for fire suppression in the Main Control Room only and has no affect on the fire in the Turbine Building. Per HC.OP-AR.QK-0002 Attach 15 and 18, Both the Motor-Driven and Diesel-Driven Fire Water pumps have Start controls on the 10C671 panel located behind 10C650A panel.

C: 1 AND 2, (CO_2 and Motor-Driven Fire Water Pump) **INCORRECT**, The 4 Ton Cardox system alarms in the Main Control Room via the 10C671 panel and the Fire Computer and can not be activated (discharged) from the Main Control Room. Per OP-AR.QK-002 Attach 15 and 18, Both the Motor-Driven and Diesel-Driven Fire Water pumps have Start controls on the 10C671 panel located behind 10C650A panel.

D: 2 AND 4, (Motor-Driven and Diesel Driven Fire Water Pumps, **CORRECT**, Per OP-AR.QK-002 Attach 15 and 18, Both pumps have Start controls on the 10C671 panel located behind 10C650A panel.

Technical Reference(s): NOH01FIRPRO (Attach if not previously provided)

Proposed References to be provided to applicants during examination: none

Learning Objective: FIRPROE021, Summarize fire protection systems/equipment that can be operated from the Main Control Room (As available)

Question Source: Bank #

Modified Bank # (Note changes or attach parent)

New X

Question History:

Question Cognitive Level: Memory or Fundamental Knowledge X

Comprehension or Analysis

10 CFR Part 55 Content: 55.41 8

55.43

Comments:

Facility: Hope Creek

Vendor: GE

Exam Date: 2012

Exam Type: RO

Examination Outline Cross-reference:	Level	RO	SRO
	Tier #	1	
	Group #	1	
	K/A #	295006 AK1.02	
	Importance Rating	3.4	

Knowledge of the operational implications of the following concepts as they apply to SCRAM : Shutdown margin

Question: RO #40

Following a reactor scram all rods are at position "00" except one that is at position "24."

Which of the following describes whether the reactor will remain shutdown?

A. Design basis shutdown margin is met, therefore the reactor will remain shutdown under all conditions.

B. Design basis shutdown margin is NOT met, therefore it CANNOT be assured that the reactor will remain shutdown under all conditions.

C. Control rods are inserted to or beyond the Maximum Sub-critical Banked Withdrawal limit, therefore the reactor will remain shutdown under all conditions.

D. Control rods are NOT inserted to or beyond the Maximum Sub-critical Banked Withdrawal limit, therefore it CANNOT be assured the reactor will remain shutdown under all conditions.

Proposed Answer: A

Explanation (Optional):

A: Design basis shutdown margin is met, therefore the reactor will remain shutdown under all conditions. **CORRECT**, Design basis shutdown margin is met, therefore the reactor will remain shutdown under all conditions. IAW Tech Specs definition, "SHUTDOWN MARGIN shall be the amount of reactivity by which the reactor is subcritical or would be subcritical assuming all control rods are fully inserted except for the single control rod of highest reactivity worth is assumed to be fully withdrawn and the reactor is in the shutdown condition; cold, i.e. 68°F and xenon free" and HC.OP-EO.ZZ-0101 Bases step RC-1 retention Override page 3.

B: Design basis shutdown margin is NOT met, therefore it CANNOT be assured that the reactor will remain shutdown under all conditions. **INCORRECT**, Design basis shutdown margin is met, therefore the reactor will remain shutdown under all conditions. IAW Tech Specs definition and

HC.OP-EO.ZZ-0101 Bases step RC-1 retention Override page 3.

C: Control rods are inserted to or beyond the Maximum Sub-critical Banked Withdrawal limit, therefore the reactor will remain shutdown under all conditions. **INCORRECT,** Maximum Sub-critical Banked Withdrawal Position is defined as: "All control rods are inserted to or beyond position 02." One rod is withdrawn past position 24. The reactor will remain shutdown under all conditions as Shutdown Margin is met.

D: Control rods are NOT inserted to or beyond the Maximum Sub-critical Banked Withdrawal limit, therefore it CANNOT be assured the reactor will remain shutdown under all conditions. **INCORRECT,** Maximum Sub-critical Banked Withdrawal Position is defined as: "All control rods are inserted to or beyond position 02." One rod is withdrawn past position 24. The reactor will remain shutdown under all conditions as Shutdown Margin is met.

Technical Reference(s): EOP-101 Bases, Tech Specs definitions 1.40 (Attach if not previously provided)

Proposed References to be provided to applicants during examination: none

Learning Objective: AB0000E003, State five (5) methods by which the operator can verify a successful scram action. (As available)

Question Source: Bank # 61270

Modified Bank # (Note changes or attach parent)

New

Question History: NRC 1998

Question Cognitive Level: Memory or Fundamental Knowledge X

Comprehension or Analysis

10 CFR Part 55 Content: 55.41 1, 2

55.43

Comments:

Facility: Hope Creek

Vendor: GE

Exam Date: 2012

Exam Type: RO

Examination Outline Cross-reference:	Level	RO	SRO
	Tier #	1	
	Group #	1	
	K/A #	295023 AK3.02	
	Importance Rating	3.4	

Knowledge of the operational implications of the following concepts as they apply to REFUELING ACCIDENTS : Interlocks associated with fuel handling equipment

Question: RO #41

Per the FSAR, when handling fuel assemblies or control rod blades, the Main Hoist Normal Up Stop interlock ensures…

A. a lowering level in the spent fuel pool will NOT result in an automatic start of FRVS.

B. heat loading on the in-service secondary containment ventilation system is minimized.

C. airborne contamination levels will not exceed the filtration capability of the FRVS system.

D. the core internals are protected from a fuel bundle or control rod drop with more impact energy than that assumed in the accident analysis.

Proposed Answer: D

Explanation (Optional):

A: a lowering level in the spent fuel pool will NOT result in an automatic start of FRVS. **INCORRECT**, – this is a concern but not the reason per the UFSAR. Interlocks on the refuel bridge do not interface with the start signals of FRVS.

B: heat loading on the in-service secondary containment ventilation system is minimized. **INCORRECT**, – this is a concern but not the reason per the UFSAR

C: airborne contamination levels will not exceed the filtration capability of the FRVS system. **INCORRECT**, – this is a concern but not the reason per the UFSAR.

D: the core internals are protected from a fuel bundle or control rod drop with more impact energy that that assumed in the accident analysis. **CORRECT**, per HC.OP-SO.KE-0001 Rev 43. Caution at step 5.2.14

Technical Reference(s): HC.OP-SO.KE-0001 Rev 43. (Attach if not previously provided)

Proposed References to be provided to applicants during examination: none

Learning Objective: IOP009E003 Explain the basis for all Precautions, Limitations and Notes listed in the REFUELING OPERATIONS Integrated Operating Procedure, IAW this Lesson Plan (As available)

Question Source: Bank # 77485

Modified Bank # (Note changes or attach parent)

New

Question History:

Question Cognitive Level: Memory or Fundamental Knowledge X

Comprehension or Analysis

10 CFR Part 55 Content: 55.41 3, 6

55.43

Comments:

Facility: Hope Creek

Vendor: GE

Exam Date: 2012

Exam Type: RO

Examination Outline Cross-reference:	Level	RO	SRO
	Tier #	1	
	Group #	1	
	K/A #	295019 AK2.14	
	Importance Rating	3.2	

Knowledge of the interrelations between PARTIAL OR COMPLETE LOSS OF INSTRUMENT AIR and the following: Plant air systems

Question: RO #42

Given:

- A complete loss of service and instrument air has occurred
- Service and Instrument Air receivers are depressurized
- Reactor level and pressure are being maintained by HPCI and RCIC
- The temporary diesel driven air compressor is NOT available

Then:

- Maintenance has reported that the 10K107 Service Air Compressor is now ready to be placed back in service
- The Coast-Down Timer has been reset
- The Post-Lube Timer has been reset

Will the Reactor Operator in the Control Room be able to place the 10K107 back in service with the present plant conditions and why?

A. NO. There is NO instrument air available to run the Auxiliary Oil pump to start the Service Air Compressor and the start-up oil pressure interlock can NOT be satisfied.

B. NO. There is NO service air available to run the Auxiliary Oil pump to start the Service Air Compressor and the start-up oil pressure interlock can NOT be satisfied.

C. YES. The Auxiliary Oil pump is motor driven and the start-up oil pressure interlock will be satisfied.

D. YES. The Auxiliary Oil pump is NOT needed to start the Service Air Compressor.

Proposed Answer: D

Explanation (Optional):

A: NO. There is NO instrument air available to run the Auxiliary Oil pump to start the Service Air Compressor and the start-up oil pressure interlock can NOT be satisfied. **INCORRECT**, the Auxiliary Oil pump is driven by instrument air, there is no air to drive the pump and the main oil pump will start without the aux oil pump being in service prior to the start.

B: NO. There is NO service air available to run the Auxiliary Oil pump to start the Service Air Compressor and the start-up oil pressure interlock can NOT be satisfied. **INCORRECT,** the Auxiliary Oil pump is driven by instrument air, there is no air to drive the pump and the main oil pump will start without the aux oil pump being in service prior to the start.

C: YES. The Auxiliary Oil pump is motor driven and the start-up oil pressure interlock will be satisfied. **INCORRECT,** the Auxiliary Oil pump is driven by instrument air, there is no air to drive the pump and the main oil pump will start without the aux oil pump being in service prior to the start.

D: YES. The Auxiliary Oil pump is NOT needed to start the Service Air Compressor. **CORRECT,** the Auxiliary Oil pump is driven by instrument air, there is no air to drive the pump and the main oil pump will start without the aux oil pump being in service prior to the start.

Technical Reference(s): OP-SO.KA-001, NOH01SERAIR (Attach if not previously provided)

Proposed References to be provided to applicants during examination: none

Learning Objective: SERAIRE009, Concerning the Main and Auxiliary Oil Pumps: Discuss their type, capacity, and purpose IAW available references. Given a system diagram, determine the lube oil flowpath IAW available references. (As available)

Question Source: Bank #

Modified Bank # (Note changes or attach parent)

New X

Question History:

Question Cognitive Level: Memory or Fundamental Knowledge X

Comprehension or Analysis

10 CFR Part 55 Content: 55.41 7

55.43

Comments:

Facility: Hope Creek

Vendor: GE

Exam Date: 2012

Exam Type: RO

Examination Outline Cross-reference:	Level	RO	SRO
	Tier #	1	
	Group #	1	
	K/A #	295004 AK2.02	
	Importance Rating	3.0	

Knowledge of the interrelations between PARTIAL OR COMPLETE LOSS OF D.C. POWER and the following: Batteries

Question: RO #43

Regarding the battery chargers for the following DC Busses:

- RCIC 250 VDC bus 10D460
- 125 VDC bus 10D420

Which one of the following describes how their respective bus power is affected following the loss of their respective charger(s)?

IAW OP-ZZ.AB-135 Station Blackout, EDG Malfunction:

_____(1)_____ batteries are designed to supply their loads for _(2)_____ .

	(1)	(2)
A.	250 VDC 125 VDC	Four hours Four hours
B.	250 VDC 125 VDC	Two hours Two hours
C.	250 VDC 125 VDC	Two hours Four hours
D.	250 VDC 125 VDC	Four hours Two hours

Proposed Answer: A

Explanation (Optional):

A: 250 VDC - 4 hours, 125 VDC - 4 hours, **CORRECT**, Per Table 5.3 of AB.ZZ-0135, each battery bus is designed for a 4 hour capacity (1885 AH @ 8 hours 10D420) (330 AH @ 8 hours 10D460)

B: 250 VDC - 2 hours, 125 VDC - 2 hours, **INCORRECT**, Per Table 5.3 of AB.ZZ-0135, each battery bus is designed for a 4 hour capacity (1885 AH @ 8 hours 10D420) (330 AH @ 8 hours 10D460)

C: 250 VDC - 2 hours, 125 VDC - 4 hours, **INCORRECT,** Per Table 5.3 of AB.ZZ-0135, each battery bus is designed for a 4 hour capacity (1885 AH @ 8 hours 10D420) (330 AH @ 8 hours 10D460)

D: 250 VDC - 4 hours, 125 VDC - 2 hours, **INCORRECT,** Per Table 5.3 of AB.ZZ-0135, each battery bus is designed for a 4 hour capacity (1885 AH @ 8 hours 10D420) (330 AH @ 8 hours 10D460)

Technical Reference(s): OP-AB.ZZ-0135 Table 5.3 Battery Bank Capacities (Attach if not previously provided)

Proposed References to be provided to applicants during examination: none

Learning Objective: 0AB135E004, Explain the reasons for how plant/system parameters respond when implementing, Station Blackout/Loss Of Offsite Power Diesel Generator Malfunction, Abnormal Operating Procedure. (As available)

Question Source: Bank #

Modified Bank # (Note changes or attach parent)

New X

Question History:

Question Cognitive Level: Memory or Fundamental Knowledge X

Comprehension or Analysis

10 CFR Part 55 Content: 55.41 7

55.43

Comments:

Facility: Hope Creek

Vendor: GE

Exam Date: 2012

Exam Type: RO

Examination Outline Cross-reference:	Level	RO	SRO
	Tier #	1	
	Group #	1	
	K/A #	295031 EK2.14	
	Importance Rating	3.9	

Knowledge of the interrelations between REACTOR LOW WATER LEVEL and the following: Emergency generators

Question: RO #44

A plant transient has occurred:

- HPCI and RCIC started automatically to restore level
- Reactor level is presently being held @ 35" by RCIC
- HPCI was secured by the operator
- Reactor pressure is being controlled by SRVs
- 10C650E upper section LOCA load shed breakers are OPEN
- 10C650E lower section LOCA load shed breakers are CLOSED

(Assume NO additional operator actions)

With the above conditions, what is the status of the emergency diesel generators?

A. Due to the 10C650E upper section breaker status, the diesels are running unloaded.

B. Due to the 10C650E lower section breaker status, the diesels are running unloaded.

C. Due to the 10C650E upper section breaker status, the diesels are running loaded.

D. Due to the 10C650E lower section breaker status, the diesels are NOT running.

Proposed Answer: D

Explanation (Optional):

A: Due to the 10C650E upper section breaker status, the diesels are running unloaded. **INCORRECT**, The emergency diesel generators will NOT be running, either loaded/unloaded. Because reactor vessel level only dropped to $\leq$ -38", the upper section breakers have LOCA load shed and the lower section breakers remain closed.

B: Due to the 10C650E lower section breaker status, the diesels are running unloaded. **INCORRECT**, The emergency diesel generators will NOT be running, either loaded/unloaded. Because reactor vessel level only dropped to ≤ -38", the upper section breakers have LOCA load shed and the lower section breakers remain closed.

C: Due to the 10C650E upper section breaker status, the diesels are running loaded. **INCORRECT**, The emergency diesel generators will NOT be running, either loaded/unloaded. Because reactor vessel level only dropped to ≤ -38", the upper section breakers have LOCA load shed and the lower section breakers remain closed.

D: Due to the 10C650E lower section breaker status, the diesels are NOT running. **CORRECT,** The emergency diesel generators will NOT be running, either loaded/unloaded. Because reactor vessel level only dropped to ≤ -38", the upper section breakers have LOCA load shed and the lower section breakers remain closed.

Technical Reference(s): OP-SO.SM-0001 tables 19/20, OP-SO.KJ-0001 (Attach if not previously provided)

Proposed References to be provided to applicants during examination: AV2460J, (10C650E section drawing-color)

Learning Objective: EDG000E006, From memory, recall the auto start signals associated with the Diesel Generators, including: a. Setpoints for LOP and Degraded Voltage signals. b. Setpoints for LOCA signals. (As available)

Question Source: Bank #

Modified Bank # (Note changes or attach parent)

New X

Question History:

Question Cognitive Level: Memory or Fundamental Knowledge

Comprehension or Analysis X

10 CFR Part 55 Content: 55.41 7, 8

55.43

Comments:

Facility: Hope Creek

Vendor: GE

Exam Date: 2012

Exam Type: RO

Examination Outline Cross-reference:	Level	RO	SRO
	Tier #	1	
	Group #	1	
	K/A #	295003 AK3.01	
	Importance Rating	3.3	

Knowledge of the reasons for the following responses as they apply to PARTIAL OR COMPLETE LOSS OF A.C. POWER : Manual and auto bus transfer

Question: RO #45

The 10A401 bus is being supplied by its normal infeed breaker (52-40108) when an undervoltage condition occurs on that infeed.

An AUTOMATIC TRANSFER to the alternate power supply can still occur if the…

A. alternate infeed (52-40101) voltage is <92% of nominal.

B. alternate infeed (52-40101) "Auto Close Block" control is illuminated.

C. associated DG test lockout exists due to reverse power.

D. associated bus lockout (overcurrent or differential overcurrent) exists.

Proposed Answer: C

Explanation (Optional):

A: Alternate infeed voltage is <92% of nominal. **INCORRECT**, This condition would signify an undervoltage condition on the alternate infeed breaker and a bus transfer would not occur. The infeed to be transferred to must be above the 94% nominal voltage.

B: Alternate infeed "Auto Close Block" control is illuminated. **INCORRECT**, Once the bus voltage is < 70% undervoltage, undervoltage relays trip. IF bus voltage decreases to < 70%, regardless of the feeder voltage conditions, the alternate supply breaker will close following a 0.7 second time delay, provided: Auto Close Block is NOT selected. And Associated feeder voltage is ≥ 94%.

C: Associated DG test lockout exists due to reverse power. **CORRECT**, While in TEST, an Emergency Diesel Generator trips upon receipt of any of the following signals: Bus Overcurrent EDG Reverse Power, EDG Low Field Current, EDG Over Excitation. Only the EDG Output breaker would be tripped and a transfer to the alternate infeed breaker could occur.

D: Associated bus lockout (overcurrent or differential overcurrent) exists. **INCORRECT**, Switchgear Bus Overcurrent condition: Trips the supplying breaker AND blocks closing of the alternate breaker. Trips AND locks out load/motor feeder breakers. Initiates breaker failure protection.

Technical Reference(s): OP-SO.PB-0001, OP-SO.KJ-001 Interlocks 3.3.4. (Attach if not previously provided)

Proposed References to be provided to applicants during examination: none

Learning Objective: 1EAC00E025, Given a labeled diagram/drawing (Figs. 2,3,4) of, or access to, the 1E AC Power System controls/indication bezels, a. Predict when each indicator will light. b. Assess plant conditions that will cause the indicators to light or extinguish. c. Predict the effect of each control switch on the 1E AC Power System. d. Assess the plant conditions or permissives required for the control switches to perform their intended function IAW the Lesson Plan. (As available)

Question Source: Bank # 54043

Modified Bank # (Note changes or attach parent)

New

Question History:

Question Cognitive Level: Memory or Fundamental Knowledge X

Comprehension or Analysis

10 CFR Part 55 Content: 55.41 7, 10

55.43

Comments:

Facility: Hope Creek

Vendor: GE

Exam Date: 2012

Exam Type: RO

Examination Outline Cross-reference:	Level	RO	SRO
	Tier #	1	
	Group #	1	
	K/A #	295026 EK3.05	
	Importance Rating	3.9	

Knowledge of the reasons for the following responses as they apply to SUPPRESSION POOL HIGH WATER TEMPERATURE: Reactor SCRAM

Question: RO #46

Step SP/T-5 and SP/T-6 of the Suppression Pool Temperature Control section of HC.OP-EO.ZZ-102, Primary Containment Control, directs the initiation of a Reactor scram prior to reaching 110°F in the Suppression Pool.

Which of the following describes the reason for initiating a Reactor scram at this suppression pool temperature?

A reactor scram is required prior to reaching 110°F...

A. to prevent exceeding the Suppression Pool design temperature.

B. to ensure enough time is available to inject the Hot Shutdown Boron Weight of boron into the RPV before Suppression Pool temperature exceeds the Heat Capacity Temperature Limit.

C. to limit the heat input into the Primary Containment as much as possible, since the heat capacity of the Suppression Pool is lost with Suppression Pool temperature above 110°F.

D. to ensure enough time is available to inject the Hot Shutdown Boron Weight of boron into the RPV before Suppression Pool temperature exceeds the Pressure Suppression Pressure Limit.

Proposed Answer: B

Explanation (Optional):

A: To prevent exceeding the Suppression Pool design temperature. **INCORRECT**, The design temperature of the Torus is 310°F which is not in jeopardy at 110°F.

B: This is the Suppression Pool temperature at which the initiation of a Reactor scram is required by Technical Specifications. CORRECT, Tech Specs 3.6.2.1 action b.2. states "With Suppression Pool average temperature greater than 110°F, place the Reactor Mode switch in

the shutdown position...". Per EOP Limits Conv. The Boron Injection Initiation Temperature (BIIT) is the greater of: The highest suppression pool temperature at which initiation of boron injection will permit injection of the Hot Shutdown Boron Weight of boron before suppression pool temperature exceeds the Heat Capacity Temperature Limit. The suppression pool temperature at which a reactor scram is required by plant Technical Specifications.

C: To limit the heat input into the Primary Containment as much as possible, since the heat capacity of the Suppression Pool is lost with Suppression Pool temperature above 110°F. **INCORRECT,** The heat capacity of the SP is reduced at 110°F but not lost until 212°F.

D: To ensure enough time is available to inject the Hot Shutdown Boron Weight of boron into the RPV before Suppression Pool temperature exceeds the Pressure Suppression Pressure Limit. **INCORRECT,** The requirement is to inject the HSBW before SP temperature reaches the HCTL.

Technical Reference(s): HC.OP-EO.ZZ-0102, Steps SP/T-5 & SP/T-6, Tech Spec 3.6.2.1.a.2)b) OP-EO.ZZ-Limits-Conv 5/56 (Attach if not previously provided)

Proposed References to be provided to applicants during examination: none

Learning Objective: EOP102E009, Given any step of the procedure, determine the reason for performance of that step and/or predict expected system response to control manipulations prescribed by that step IAW available control room references. (As available)

Question Source: Bank # 55982

Modified Bank # (Note changes or attach parent)

New

Question History:

Question Cognitive Level: Memory or Fundamental Knowledge X

Comprehension or Analysis

10 CFR Part 55 Content: 55.41 10

55.43

Comments:

Facility: Hope Creek

Vendor: GE

Exam Date: 2012

Exam Type: RO

Examination Outline Cross-reference:	Level	RO	SRO
	Tier #	1	
	Group #	1	
	K/A #	295037 EK3.03	
	Importance Rating	4.1	

Knowledge of the reasons for the following responses as they apply to SCRAM CONDITION PRESENT AND REACTOR POWER ABOVE APRM DOWNSCALE OR UNKNOWN : Lowering reactor water level

Question: RO #47

What describes why and to what RPV level is lowered to during performance of OP-EO.ZZ-0101A, ATWS - RPV Control?

A. The level is lowered to below the level of the feedwater spargers to maximize Core Inlet Sub-cooling.

B. The level is lowered to a few inches above the level of the feedwater spargers to maximize Core Inlet Sub-cooling.

C. The level is lowered to below the level of the feedwater spargers to minimize Core Inlet Sub-cooling.

D. The level is lowered to a few inches above the level of the feedwater spargers to minimize Core Inlet Sub-cooling.

Proposed Answer: C

Explanation (Optional):

A: The level is lowered to below the level of the feedwater spargers to maximize Core Inlet Sub-cooling. **INCORRECT**, the reason is to reduce core inlet sub-cooling

B: The level is lowered to a few inches above the level of the feedwater spargers to maximize Core Inlet Sub-cooling. **INCORRECT**, the reason is to reduce core inlet sub-cooling and it is lowered below the spargers

C: The level is lowered to below the level of the feedwater spargers to minimize Core Inlet Sub-cooling, **CORRECT**, IAW EOP-101A bases, If the reactor is not shutdown, RPV water level must be controlled to minimize core inlet subcooling, thereby preventing or mitigating the consequences of any large irregular neutron flux oscillations induced by neutronic/thermal-hydraulic instabilities.

D: The level is lowered to a few inches above the level of the feedwater spargers to minimize Core Inlet Sub-cooling, **INCORRECT**, level is lowered to below the spargers, not above them, If the reactor is not shutdown, RPV water level must be controlled to minimize core inlet subcooling,

thereby preventing or mitigating the consequences of any large irregular neutron flux oscillations induced by neutronic/thermal-hydraulic instabilities.

Technical Reference(s): EOP 101A Bases (Attach if not previously provided)

Proposed References to be provided to applicants during examination: none

Learning Objective: EO101AE006, Given any step of the procedure, explain the reason for performance of that step and/or evaluate the expected system response to control manipulations prescribed by that step. (As available)

Question Source: Bank # 120300

Modified Bank # (Note changes or attach parent)

New

Question History:

Question Cognitive Level: Memory or Fundamental Knowledge X

Comprehension or Analysis

10 CFR Part 55 Content: 55.41 10

55.43

Comments:

Facility: Hope Creek

Vendor: GE

Exam Date: 2012

Exam Type: RO

Examination Outline Cross-reference:	Level	RO	SRO
	Tier #	1	
	Group #	1	
	K/A #	295021 AA1.04	
	Importance Rating	3.7	

Ability to operate and/or monitor the following as they apply to LOSS OF SHUTDOWN COOLING : Alternate heat removal methods

Question: RO #48

The plant was operating at 100% power when a Loss of Offsite Power occurred.
Shortly thereafter, Control Room abandonment was required and control was transferred to the Remote Shutdown Panel.

Which of the following describes the alignment for Alternate Shutdown Cooling from the Remote Shutdown Panel (10C399) under these conditions?

A. Injection is from 'B' RHR through the LPCI line, maintaining at least two SRVs open with reactor pressure at least 50 psig above suppression chamber pressure.

B. Injection is from 'A' RHR through the LPCI line, maintaining at least two SRVs open with reactor pressure at least 50 psig above suppression chamber pressure.

C. Injection is from 'B' RHR through the LPCI line, maintaining at least one SRV open with reactor pressure at least 50 psig above suppression chamber pressure.

D. Injection is from 'A' RHR through the LPCI line, maintaining at least one SRV open with reactor pressure at least 50 psig above suppression chamber pressure.

Proposed Answer: A

Explanation (Optional):

A: Injection is from 'B' RHR through the LPCI line, maintaining at least two SRVs open with reactor pressure at least 50 psig above suppression chamber pressure. **CORRECT,** OP-IO.ZZ-008 Attachment 10 directs opening two SRVs and injecting with 'B' RHR through the F017 as necessary to maintain reactor pressure at least 50 psig above suppression pool pressure

B: Injection is from 'A' RHR through the LPCI line, maintaining at least two SRVs open with reactor pressure at least 50 psig above suppression chamber pressure. **INCORRECT,** OP-IO.ZZ-008

Attachment 10, 'A' RHR is placed in suppression pool cooling and injection is with 'B' RHR. ('A' RHR has no controls for the HV-F003 or F048 at the RSP, so controlling injection and cooldown rate would be difficult).

C: Injection is from 'B' RHR through the LPCI line, maintaining at least one SRV open with reactor pressure at least 50 psig above suppression chamber pressure. **INCORRECT,** OP-IO.ZZ-008 Attachment 10 directs opening two SRVs and injecting with 'B' RHR through the F017 as necessary to maintain reactor pressure at least 50 psig above suppression pool pressure. OP-IO.ZZ-008 Attachment 10, additionally a third SRV would be opened if reactor pressure stabilized more than 160 psig above suppression pool pressure.

D: Injection is from 'A' RHR through the LPCI line, maintaining at least one SRV open with reactor pressure at least 50 psig above suppression chamber pressure. **INCORRECT,** OP-IO.ZZ-008 Attachment 10 directs opening two SRVs and injecting with 'B' RHR through the F017 as necessary to maintain reactor pressure at least 50 psig above suppression pool pressure. OP-IO.ZZ-008 Attachment 10, 'A' RHR is placed in suppression pool cooling and injection is with 'B' RHR. ('A' RHR has no controls for the HV-F003 or F048 at the RSP, so controlling injection and cooldown rate would be difficult). Additionally, a third SRV would be opened if reactor pressure stabilized more than 160 psig above suppression pool pressure.

Technical Reference(s): OP-IO.ZZ-008 (Attach if not previously provided)

Proposed References to be provided to applicants during examination: none

Learning Objective: IOP008E006, Analyze plant conditions and parameters to determine if plant operation is in accordance with the SHUTDOWN FROM OUTSIDE THE CONTROL ROOM Integrated Operating Procedure, supporting System Operating Procedures and Technical Specifications. (As available)

Question Source: Bank #

Modified Bank # 62226 (Note changes or attach parent)

New

Question History:

Question Cognitive Level: Memory or Fundamental Knowledge X

Comprehension or Analysis

10 CFR Part 55 Content: 55.41 8, 10

55.43

Comments:

Facility: Hope Creek

Vendor: GE

Exam Date: 2012

Exam Type: RO

Examination Outline Cross-reference:	Level	RO	SRO
	Tier #	1	
	Group #	1	
	K/A #	295001 AA1.07	
	Importance Rating	3.1	

Ability to operate and/or monitor the following as they apply to PARTIAL OR COMPLETE LOSS OF FORCED CORE FLOW CIRCULATION : Nuclear boiler instrumentation system

Question: RO #49

Given:

- The reactor is operating on the 100% rod line
- "B" Reactor Recirc pump just tripped
- "A" Reactor Recirc receives a FULL runback

Conditions now are:

- Reactor power is 57%
- "B" Recirc Loop flow is 1.1 Kgpm/Hr (R614-B31)
- "A" Recirc Loop flow is 15.4 Kgpm/Hr (R614-B31)
- Core Flow is 24.6 x 10^6 lbsm/Hr (FR-R613-B21)
- Jet Pump Loop B flow 9.8 x 10^6 lbsm/Hr (FL-R611B-B21)
- Jet Pump Loop A flow 32.3 x 10^6 lbsm/Hr (FL-R611A-B21)
- Observed APRM noise is stable at 3% peak to peak
- OPRMs are operable

What operator action is required?

A. Lock the Mode switch in SHUTDOWN.

B. Perform actions IAW Enhanced Stability Guidelines (ESG).

C. Perform actions IAW Standard Power Reduction Instructions (SPRI).

D. Enter IO-006 Power Changes During Operation ONLY for Single Loop Operations.

Proposed Answer: B

Explanation (Optional):

A: Lock the Mode switch in SHUTDOWN, **INCORRECT**, From AB.RPV-003 Immediate Operator actions: OPRM's INOPERABLE AND in REGION 1 of Figure 1, Plant is in Region 1 of the power to flow map, however OPRMs are operable and exiting the region is permissible/required IAW the Enhanced Stability Guidance (ESG) per RE-AB.ZZ-001

B: Perform actions IAW Enhanced Stability Guidelines (ESG), **CORRECT,** Per AB.RPV-003, Condition B3. IF OPRM's are OPERABLE, THEN **PERFORM** the following: A. IF in REGION 1 of Figure 2 THEN **EXIT** REGION 1 IAW Enhanced Stability Guidance.(ESG) (RE.ZZ-0001)

C: Perform actions IAW Standard Power Reduction Instructions (SPRI), **INCORRECT,** these actions would be taken if both reactor recirc pumps were in service. Per AB.RPV-003, Condition B3. IF OPRM's are OPERABLE, THEN **PERFORM** the following: A. IF in REGION 1 of Figure 2 THEN **EXIT** REGION 1 IAW Enhanced Stability Guidance.(ESG) (RE.ZZ-0001)

D: Enter IO-006 ONLY for Single Loop Operations, **INCORRECT,** this procedure will be entered, however other actions are required to exit Region 1 of the power to flow map.

Technical Reference(s): AB.RPV-003, RE-AB.ZZ-001 (Attach if not previously provided)

Proposed References to be provided to applicants during examination: AB.RPV-003, power to flow maps

Learning Objective: RECIRCE011, Given a set of conditions and a drawing of, or access to, the controls, instrumentation and/or alarms located in the Main Control Room, assess the status of the Recirc System or its components by evaluation of the controls/instrumentation/alarms (As available)

Question Source: Bank #

Modified Bank # (Note changes or attach parent)

New X

Question History:

Question Cognitive Level: Memory or Fundamental Knowledge

Comprehension or Analysis X

10 CFR Part 55 Content: 55.41 2, 10

55.43

Comments:

Facility: Hope Creek

Vendor: GE

Exam Date: 2012

Exam Type: RO

Examination Outline Cross-reference:	Level	RO	SRO
	Tier #	1	
	Group #	1	
	K/A #	295016 AA1.02	
	Importance Rating	2.9	

Ability to operate and/or monitor the following as they apply to CONTROL ROOM ABANDONMENT : Reactor/turbine pressure regulating system

Question: RO #50

Given:

- The plant was operating at 90% power
- Toxic gas concerns have required the Main Control Room to be evacuated
- HC.OP-AB.HVAC-002 Condition C has been completed for all control room actions
- The transfer of controls to the Remote Shutdown Panel (10C399) have been completed

Which of the following systems are available for reactor vessel pressure control from the Remote Shutdown Panel (10C399)?

A. SRV's F, H & M AND RHR Shutdown Cooling

B. Reactor Feed Pumps AND Reactor Recirculation

C. High Pressure Coolant Injection AND LO-LO SET SRVs

D. SRV's A and E and Reactor Core Isolation Cooling

Proposed Answer: A

Explanation (Optional):

A: SRV's F, H & M and RHR Shutdown Cooling, **CORRECT**, IO-8 initiates RPV cooldown with SRV's F,H, & M until Shutdown Cooling can be established.

B: Reactor Feed Pumps and Reactor Recirculation, **INCORRECT**, Subsequent action C of HVAC-002 Trips the main turbine and closes the MSIVs. Recirc pumps are manually tripped and discharge valves closed.

C: High Pressure Coolant Injection and LO-LO SET SRVs, **INCORRECT,** HPCI cannot be controlled from the Remote Shutdown Panel (10C399). LO LO SET SRVs are only controlled

from the Control Room.

D: SRV's A and E and Reactor Core Isolation Cooling, **INCORRECT,** SRV's A and E are only available in the lower relay room on 102' and are not available from the RSP (10C399)

Technical Reference(s): IO.ZZ-008 AB.HVAC-002 (Attach if not previously provided)

Proposed References to be provided to applicants during examination: none

Learning Objective: IOP008E006, Analyze plant conditions and parameters to determine if plant operation is in accordance with the SHUTDOWN FROM OUTSIDE THE CONTROL ROOM Integrated Operating Procedure, supporting System Operating Procedures and Technical Specifications. (As available)

Question Source: Bank # 68860

Modified Bank # (Note changes or attach parent)

New

Question History: NRC 2002

Question Cognitive Level: Memory or Fundamental Knowledge X

Comprehension or Analysis

10 CFR Part 55 Content: 55.41 8, 10

55.43

Comments:

Facility: Hope Creek

Vendor: GE

Exam Date: 2012

Exam Type: RO

Examination Outline Cross-reference:	Level	RO	SRO
	Tier #	1	
	Group #	1	
	K/A #	295024 EA2.01	
	Importance Rating	4.2	

Ability to determine and/or interpret the following as they apply to HIGH DRYWELL PRESSURE: Drywell pressure

Question: RO #51

Given:

- The reactor has scrammed (all control rods are at position 00) on high drywell pressure
- Reactor pressure is 35 psig
- Reactor level is -90 inches and rising
- Suppression pool level is 75 inches
- Suppression pool temp is 120°F
- Suppression chamber temp is 100°F
- Suppression chamber press is 15 psig
- Drywell temp is 280°F
- Drywell pressure is 17 psig

To control the primary containment under these conditions the operator should monitor and control hydrogen concentration in the Supp Chamber and the Drywell and:

A. place one loop of RHR in drywell spray and the other loop of RHR in drywell and suppression chamber spray.

B. place one loop of RHR in suppression pool cooling and the other loop of RHR in drywell and suppression chamber spray.

C. place one loop of RHR in suppression pool cooling and suppression chamber spray and the other loop of RHR in drywell spray.

D. place one loop of RHR in suppression pool cooling and the other loop of RHR in drywell spray, and vent the suppression chamber.

Proposed Answer: C

Explanation (Optional):

A: place one loop of RHR in drywell spray and the other loop of RHR in drywell and suppression chamber spray. **INCORRECT**, Drywell Spray is always on a loop by itself, if available the second loop is placed in Suppression Pool Cooling/spray to prevent inadvertent bypass of the containment on the operating pump trip. Never place both loops in Drywell Spray this may exceed the makeup capacity of the vacuum breakers and draw the containment negative.

B: place one loop of RHR in suppression pool cooling and the other loop of RHR in drywell and suppression chamber spray. **INCORRECT,** Drywell Spray is always on a loop by itself, if available the second loop is placed in Suppression Pool Cooling/spray to prevent inadvertent bypass of the containment on the operating pump trip.

C: place one loop of RHR in suppression pool cooling and suppression chamber spray and the other loop of RHR in Drywell Spray. **CORRECT,** adequate core cooling is assured, Suppression Pool temperature requires Suppression Pool Cooling/spray, DWSIL curve is satisfied Drywell Spray is appropriate.

D: place one loop of RHR in suppression pool cooling and the other loop of RHR in drywell spray, and vent the suppression chamber. **INCORRECT,** venting the containment is only requires if pressure cannot be maintained below the design limit of 65 psig, and only after attempts to lower pressure with Drywell Spray.

Technical Reference(s): EOP-102 (Attach if not previously provided)

Proposed References to be provided to applicants during examination: EOP-102 DW/P leg and DW/T leg

Learning Objective: EO102PE007, Given any step of the procedure, determine the reason for performance of that step and/or predict expected system response to control manipulations prescribed by that step IAW available control room references. (As available)

Question Source: Bank # 80609

Modified Bank # (Note changes or attach parent)

New

Question History: NRC 2003

Question Cognitive Level: Memory or Fundamental Knowledge

Comprehension or Analysis X

10 CFR Part 55 Content: 55.41 9, 10

55.43

Comments:

Facility: Hope Creek

Vendor: GE

Exam Date: 2012

Exam Type: RO

Examination Outline Cross-reference:	Level	RO	SRO
	Tier #	1	
	Group #	1	
	K/A #	295038 EA2.04	
	Importance Rating	4.1	

Ability to determine and/or interpret the following as they apply to HIGH OFF-SITE RELEASE RATE : Source of off-site release

Question: RO #52

Given:

- A plant shutdown is in progress
- North Plant Vent RMS is in HIGH alarm
- South Plant Vent RMS is reading 4.5 e^{+2} µCi/sec
- FRVS Vent RMS is reading 6.5e^{-2} µCi/sec
- FRVS is NOT in service

Which of the following is the source of the high alarm?

A. Service Area Exhaust System

B. Solid Radwaste Exhaust System

C. Radwaste Area Exhaust System

D. Turbine Building Exhaust System

Proposed Answer: B

Explanation (Optional):

A: Service Area Exhaust System, **INCORRECT**, Discharges to South Plant Vent Stack, See AB.CONT-004, Condition C.

B: Solid Radwaste Exhaust System, **CORRECT,** Discharges to North Plant Vent Stack, See AB.CONT-004, Condition D.

C: Radwaste Area Exhaust System, **INCORRECT,** Discharges to South Plant Vent Stack, See AB.CONT-004, Condition C.

D: Turbine Building Exhaust System, **INCORRECT,** Discharges to South Plant Vent Stack, See AB.CONT-004, Condition C.

Technical Reference(s): AB.CONT-004 (Attach if not previously provided)

Proposed References to be provided to applicants during examination: none

Learning Objective: ABCNT4E001, Recognize abnormal indications/alarms and/or procedural requirements for implementing Radioactive Gaseous Release. (As available)

Question Source: Bank # 55868

Modified Bank # (Note changes or attach parent)

New

Question History:

Question Cognitive Level: Memory or Fundamental Knowledge X

Comprehension or Analysis

10 CFR Part 55 Content: 55.41 10, 11

55.43

Comments:

Facility: Hope Creek

Vendor: GE

Exam Date: 2012

Exam Type: RO

Examination Outline Cross-reference:	Level	RO	SRO
	Tier #	1	
	Group #	1	
	K/A #	700000 AA2.02	
	Importance Rating	3.5	

Ability to determine and/or interpret the following as they apply to GENERATOR VOLTAGE AND ELECTRIC GRID DISTURBANCES: Voltage outside the generator capability curve.

Question: RO #53

Given:

- The plant is operating at 100% power
- Generator load is 1290 MWe
- Generator H_2 pressure is 73 psi

Following a transient on the grid:

- Generator MVARs are 40
- Generator load remains 1290 MWe

What actions (if any) are required?

A. No actions are required

B. Raise generator MWe

C. Raise generator H_2 pressure

D. Raise MVARs above the current value

Proposed Answer: D

Explanation (Optional):

A: No actions are required, **INCORRECT**, IAW Att 1 of OP-SO.MA-001, presently below the minimum excitation line of the generator capability curve, if megawatts electric were raised would put the generator further away from the minimum curve. Requires that megavar load be raised to get within the curve, at least to 80 megavars

B: Raise generator MWe **INCORRECT**, IAW Att 1 of OP-SO.MA-001, presently below the minimum excitation line of the generator capability curve, if megawatts electric were raised would put the generator further away from the minimum curve. Requires that megavar load be raised to get within the curve, at least to 80 megavars

C: Raise generator H_2 pressure, **INCORRECT**, IAW Att 1 of OP-SO.MA-001, presently below the minimum excitation line of the generator capability curve, if hydrogen pressure was raised would more affect the generators megawatt maximum versus megavar minimum. Also present generator hydrogen pressure is 73 psig which is normal at this power level. Requires that megavar load be raised to get within the curve, at least to 80 megavars

D: Raise MVARs above the current value, **CORRECT**, IAW Att 1 of OP-SO.MA-001, presently below the minimum excitation line of the generator capability curve. Requires that megavar load be raised to get within the curve, at least to 80 megavars

Technical Reference(s): OP-AR.ZZ-015 , D2038 - Generator electrical malfunction
OP-SO.MA-001 Main Generator & Exciter Operation & Switching (Attach if not previously provided)

Proposed References to be provided to applicants during examination: Generator capability curve

Learning Objective: ABBOP4E005, Interpret and apply charts, graphs and tables contained within Grid Disturbances. (As available)

Question Source: Bank #

Modified Bank # (Note changes or attach parent)

New X

Question History:

Question Cognitive Level: Memory or Fundamental Knowledge

Comprehension or Analysis X

10 CFR Part 55 Content: 55.41 5, 10

55.43

Comments:

Facility: Hope Creek

Vendor: GE

Exam Date: 2012

Exam Type: RO

Examination Outline Cross-reference:	Level	RO	SRO
	Tier #	1	
	Group #	1	
	K/A #	295005 2.1.2	
	Importance Rating	4.1	

Knowledge of operator responsibilities during all modes of plant operation. (Main Turbine Generator Trip)

Question: RO #54

While operating with a generator load of 110 MWe, a manual turbine trip is performed.

(1) Which of the following describes when the operator is REQUIRED to open the generator output breakers IAW OP-SO.AC-001 for the given conditions

AND

(2) What will be the 500KV switchyard alignment immediately after the main generator has been taken off-line? (Assume the generator has not already tripped on reverse power.)

A. (1) 15 seconds after the turbine trip.
(2) 500 KV breakers Sect. 2-6 and 5-6 are open.

B. (1) 45 seconds after the turbine trip.
(2) 500 KV breakers Sect. 2-6 and 5-6 are open.

C. (1) 15 seconds after the turbine trip.
(2) 500 KV breakers Sect. 2-6 and 5-6 are closed.

D. (1) 45 seconds after the turbine trip.
(2) 500 KV breakers Sect. 2-6 and 5-6 are closed.

Proposed Answer: A

Explanation (Optional):

A: 1) 15 seconds after the turbine trip. (2) 500 KV breakers Sect. 2-6 and 5-6 are open. **CORRECT** - IAW OP-SO.AC-001, step 3.1.15, procedure caution calls for operator actions 15 seconds after the turbine trip at low power. Low power is considered below 150 Mwe. Step 5.4.12 has the operator trip open the 500KV 2-6 and 5-6 breakers.

B: 1) 45 seconds after the turbine trip. (2) 500 KV breakers Sect. 2-6 and 5-6 are open.
INCORRECT - IAW OP-SO.AC-001, step 3.1.15, procedure caution calls for operator actions 15 seconds after the turbine trip at low power. Low power is considered below 150 Mwe. Step 5.4.12 has the operator trip open the 500KV 2-6 and 5-6 breakers.

C: 1)15 seconds after the turbine trip. (2) 500 KV breakers Sect. 2-6 and 5-6 are closed.
INCORRECT - IAW OP-SO.AC-001, step 3.1.15, procedure caution calls for operator actions 15 seconds after the turbine trip at low power. Low power is considered below 150 Mwe. Step 5.4.12 has the operator trip open the 500KV 2-6 and 5-6 breakers. The generator output breakers are NOT reclosed until the main generator disconnect is opened which requires manual switching in the 500 KV switchyard.

D: (1) 45 seconds after the turbine trip. (2) 500 KV breakers Sect. 2-6 and 5-6 are closed.
INCORRECT - IAW OP-SO.AC-001, step 3.1.15, procedure caution calls for operator actions 15 seconds after the turbine trip at low power. Low power is considered below 150 Mwe. Step 5.4.12 has the operator trip open the 500KV 2-6 and 5-6 breakers. The generator output breakers are NOT reclosed until the main generator disconnect is opened which requires manual switching in the 500 KV switchyard.

Technical Reference(s): OP-SO.AC-001 (Attach if not previously provided)

Proposed References to be provided to applicants during examination: none

Learning Objective: MNTURBE017, Explain how the Main Turbine interrelates with each of the following: a. Nuclear Boiler, b. Main Steam System, c. Steam Sealing System, d. Extraction Steam System, e. Main Turbine Lube Oil System, f. Reactor Feedwater System, g. Condensate System, h. EHC Control Logic System, i. EHC Control Oil System, j. Instrument Air System, k. Nuclear Boiler Instrumentation, l. Non-1E AC Power System, m. Bently TSI Vibration Monitoring System, n. Main Generator, o. Reactor Protection System, p. Reactor Recirculation System, q. Stator Water Cooling System (As available)

Question Source: Bank #

Modified Bank # (Note changes or attach parent)

New X

Question History:

Question Cognitive Level: Memory or Fundamental Knowledge X

Comprehension or Analysis

10 CFR Part 55 Content:	55.41	8, 10
	55.43	

Comments:

Facility: Hope Creek

Vendor: GE

Exam Date: 2012

Exam Type: RO

Examination Outline Cross-reference:	Level	RO	SRO
	Tier #	1	
	Group #	1	
	K/A #	295030 2.2.12	
	Importance Rating	3.7	

Equipment Control: Knowledge of surveillance procedures. (Low suppression pool water level)

Question: RO #55

Per Technical Specifications, the Minimum Suppression Chamber Water Volume in Operation Conditions 1, 2, and 3 is to ____(1)_____ AND this level is documented in ____(2)____ .

A. (1) ensure that a sufficient supply of water is available in the event of a LOCA to maintain downcomer submergence
(2) OP-DL.ZZ-026, Surveillance Log

B. (1) ensure adequate SRV T-Quencher submergence during Emergency Depressurization
(2) OP-DL.ZZ-026, Surveillance Log

C. (1) ensure that a sufficient supply of water is available in the event of a LOCA to maintain downcomer submergence
(2) OP-DL.ZZ-003, Control Room Console Log

D. (1) ensure adequate SRV T-Quencher submergence during Emergency Depressurization
(2) OP-DL.ZZ-003, Control Room Console Log

Proposed Answer: A

Explanation (Optional):

A: (1) ensure that a sufficient supply of water is available in the event of a LOCA to maintain downcomer submergence. (2) OP-DL.ZZ-026, Surveillance Log. **CORRECT,** See Tech Spec Bases 4.6.2, OP-DL.ZZ-0026 Attach 1a, torus level is taken on the midnight shift once a day in Modes 1, 2 and 3. Allows for a full power blowdown of the reactor contents and then reflood capability with LPCI/Core Spray

B: (1) This limit ensures adequate SRV T-Quencher submergence during Emergency Depressurization. (2) OP-DL.ZZ-026, Surveillance Log. **INCORRECT,** See Tech Spec Bases 4.6.2, OP-DL.ZZ-0026 Attach 1a, torus level is taken on the midnight shift once a day in Modes 1, 2 and 3. While maintaining level will keep the HCTL intact, the CST is NOT mentioned in the

bases as a concern for torus water level.

C: (1) ensure that a sufficient supply of water is available in the event of a LOCA to maintain downcomer submergence. (2) OP-DL.ZZ-003, Control Room Console Log. **INCORRECT,** See Tech Spec Bases 4.6.2, OP-DL.ZZ-026 Attach 1a, torus level is taken on the midnight shift once a day in Modes 1, 2 and 3. Allows for a full power blowdown of the reactor contents and then reflood capability with LPCI/Core Spray

D: (1) This limit ensures adequate SRV T-Quencher submergence during Emergency Depressurization. (2) OP-DL.ZZ-003, Control Room Console Log. **INCORRECT,** See Tech Spec Bases 4.6.2, OP-DL.ZZ-026 Attach 1a, torus level is taken on the midnight shift once a day in Modes 1, 2 and 3. While maintaining level will keep the HCTL intact, the CST is NOT mentioned in the bases as a concern for torus water level.

Technical Reference(s): Tech Spec Bases 4.6.2, OP-DL.ZZ-0026 Att 1a. LS-HC-1000-1001 SFCP 3/4 6-1 (Attach if not previously provided)

Proposed References to be provided to applicants during examination: none

Learning Objective: TECSPCE008, Given specific plant operating conditions, and a copy of the Hope Creek Generating Station Technical Specifications, determine the following: a. If a Limiting Condition for Operation has been exceeded. b. If a Limiting Safety System Setting has been reached and/or exceeded. c. If a Safety Limit has been violated. (As available)

Question Source: Bank #

Modified Bank # (Note changes or attach parent)

New X

Question History:

Question Cognitive Level: Memory or Fundamental Knowledge X

Comprehension or Analysis

10 CFR Part 55 Content: 55.41 3, 8, 10

55.43

Comments:

Facility: Hope Creek

Vendor: GE

Exam Date: 2012

Exam Type: RO

Examination Outline Cross-reference:	Level	RO	SRO
	Tier #	1	
	Group #	1	
	K/A #	295028 2.2.42	
	Importance Rating	3.9	

Equipment Control: Ability to recognize system parameters that are entry-level conditions for Technical Specifications. (High drywell temperature)

Question: RO #56

Which one of the following identifies the bases for the Drywell Average Air Temperature Limiting Condition for Operation (LCO)?

In the event of a DBA, initial drywell average air temperature is assumed to be less than or equal to:

A. 150°F so that the resultant peak accident temperature is maintained below 310°F during main steam line break conditions and is consistent with the safety analysis.

B. 150°F so that the containment peak air temperature does NOT exceed the design temperature of 340°F during LOCA conditions and is consistent with the safety analysis.

C. 135°F so that the resultant peak accident temperature is maintained below 310°F during main steam line break conditions and is consistent with the safety analysis.

D. 135°F, so that the containment peak air temperature does NOT exceed the design temperature of 340°F during LOCA conditions and is consistent with the safety analysis.

Proposed Answer: D

Explanation (Optional):

A: 150° F so that the resultant peak accident temperature is maintained below 310° F during main steam line break conditions and is consistent with the safety analysis. **INCORRECT**, See answer "D"

B: 150° degrees F so that the containment peak air temperature does NOT exceed the design temperature of 340° F during LOCA conditions and is consistent with the safety analysis. **INCORRECT**, See answer "D"

C: 135° F so that the resultant peak accident temperature is maintained below 310° F during main steam line break conditions and is consistent with the safety analysis. **INCORRECT**, See answer "D"

D: 135° F, so that the containment peak air temperature does NOT exceed the design temperature of 340° F during LOCA conditions and is consistent with the safety analysis. **CORRECT**, Per T/S 3/4.6.1.7 DRYWELL AVERAGE AIR TEMPERATURE, The limitation on drywell average air temperature ensures that the containment peak air temperature does not exceed the design temperature of 340°F during LOCA conditions and is consistent with the safety analysis. The 135°F average temperature is conducive to normal and long term operation.

Technical Reference(s): Tech Spec Bases 3/4.6.1.7 (Attach if not previously provided)

Proposed References to be provided to applicants during examination: none

Learning Objective: PRICONE009, Given a Scenario of applicable operating conditions and access to Technical Specifications: a. Select those sections that are applicable to the Primary Containment Structure IAW HCGS Technical Specifications. b. Evaluate Primary Containment Structure operability and determine required actions based upon system operability IAW HCGS Technical Specifications. (SRO/STA ONLY) c. Explain the bases for those technical specification items associated with the Primary Containment Structure IAW HCGS technical specifications. (As available)

Question Source: Bank # 115528

Modified Bank # (Note changes or attach parent)

New

Question History: NRC 2005

Question Cognitive Level: Memory or Fundamental Knowledge X

Comprehension or Analysis

10 CFR Part 55 Content: 55.41 9, 10

55.43

Comments:

Facility: Hope Creek

Vendor: GE

Exam Date: 2012

Exam Type: RO

Examination Outline Cross-reference:	Level	RO	SRO
	Tier #	1	
	Group #	1	
	K/A #	295018 AA2.03	
	Importance Rating	3.2	

Ability to determine and/or interpret the following as they apply to PARTIAL OR COMPLETE LOSS OF COMPONENT COOLING WATER : Cause for partial or complete loss

Question: RO #57

Given:

The Unit is in OPCON 1 at 100% power.
Multiple CRIDS high temperature alarms are in for both 'A' and 'B' Reactor Recirculation Pumps

These computer points are trending up on both 'A' and 'B' Recirc pumps:

- Pump Motor oil temperature
- Upper Motor bearing temperature
- Lower Motor bearing temperature
- #1 Seal Cavity temperature
- #2 Seal Cavity temperature

Which one of the following malfunctions could explain this combination of indications, and under these circumstances, what is the MAXIMUM amount of time that plant procedures permit continued Recirculation Pump operations?

A. Inadvertent isolation of RACS cooling water flow to the Recirculation Pumps. Restore cooling within 10 minutes, or trip both Recirculation Pumps.

B. Inadvertent isolation of Chilled Water flow to the Recirculation Pumps. Restore cooling within 10 minutes, or trip both Recirculation Pumps.

C. Inadvertent isolation of RACS cooling water flow to the Recirculation Pumps. Restore cooling within 20 minutes, or trip both Recirculation Pumps.

D. Inadvertent isolation of Chilled Water flow to the Recirculation Pumps. Restore cooling within 20 minutes, or trip both Recirculation Pumps.

Proposed Answer: A

Explanation (Optional):

A: Inadvertent isolation of RACS cooling water flow to the Recirculation Pumps. Restore cooling within 10 minutes, or trip both Recirculation Pumps. **CORRECT**, RACS cooling supplies cooling water to the specified loads. HC.OP-AB.COOL-003 "RACS" requires that the recirc pumps be tripped if RACS cooling Cannot be restored within 10 minutes.

B: Inadvertent isolation of Chilled Water flow to the Recirculation Pumps. Restore cooling within 10 minutes, or trip both Recirculation Pumps. **INCORRECT** - Chilled Water normally supplies cooling to the Recirc Pump Motor AIR coolers. A loss of chilled water would result in Motor WINDING high temperature indications and alarms, NOT the indicated alarms.

C: Inadvertent isolation of RACS cooling water flow to the Recirculation Pumps. Restore cooling within 20 minutes, or trip both Recirculation Pumps. **INCORRECT**, RACS cooling supplies cooling water to the specified loads. HC.OP-AB.COOL-003 "RACS" requires that the recirc pumps be tripped if RACS cooling Cannot be restored within 10 minutes.

D: Inadvertent isolation of Chilled Water flow to the Recirculation Pumps. Restore cooling within 20 minutes, or trip both Recirculation Pumps. **INCORRECT** - Chilled Water normally supplies cooling to the Recirc Pump Motor AIR coolers. A loss of chilled water would result in Motor WINDING high temperature indications and alarms, NOT the indicated alarms.

Technical Reference(s): M-13-0, AB.COOL-003 (Attach if not previously provided)

NOH01RACS00C

Proposed References to be provided to applicants during examination: none

Learning Objective: RECIRCE011, Given a set of conditions and a drawing of, or access to, the controls, instrumentation and/or alarms located in the Main Control Room, assess the status of the Recirc System or its components by evaluation of the controls/instrumentation/alarms IAW available control room references (As available)

Question Source: Bank # 84247

Modified Bank # (Note changes or attach parent)

New

Question History: NRC 2007

Question Cognitive Level: Memory or Fundamental Knowledge

Comprehension or Analysis X

10 CFR Part 55 Content: 55.41 7, 14

55.43

Comments:

Facility: Hope Creek

Vendor: GE

Exam Date: 2012

Exam Type: RO

Examination Outline Cross-reference:	Level	RO	SRO
	Tier #	1	
	Group #	1	
	K/A #	295025 EK3.02	
	Importance Rating	3.9	

Knowledge of the reasons for the following responses as they apply to HIGH REACTOR PRESSURE : Recirculation pump trip: Plant-Specific

Question: RO #58

Given:

- It is near the end of a fuel cycle
- Main Turbine Stop Valves (TSVs) are being tested to validate the EOC-RPT setpoints
- Two TSVs initiate an EOC-RPT signal at 10% closed
- Two TSVs initiate an EOC-RPT signal at 5% closed

Which of the following is a safety implication (if any) of this condition if reactor pressure were to exceed 1100 psig?

A. There are no safety implications because the TSV EOC-RPT trip is a 1-out-of-2 logic.

B. Reactor safety has been enhanced by the overly conservative trip value for TSV closure.

C. Void reactivity feedback may exceed control rod reactivity if these TSVs close at power.

D. There will be an excessive thermal margin upon EOC-RPT actuation if these TSVs close at power.

Proposed Answer: C

Explanation (Optional):

A: There are no safety implications because the TSV EOC-RPT trip is a 1-out-of-2 logic.
INCORRECT, The TSV closure uses various combinations, not 1 of 2 twice.

B: Reactor safety has been enhanced by the overly conservative trip value for TSV closure.
INCORRECT, setpoint is 5% +2% not 10%

C: Void reactivity feedback may exceed control rod reactivity if these TSVs close at power.
CORRECT, If the TSVs generate an EOC-RPT signal at 10% closed vice the nominal 5% closed (7% allowable) then an excess positive reactivity will be added due to delayed recirc pump trip

D: There will be an excessive thermal margin upon EOC-RPT actuation if these TSVs close at power. **INCORRECT,** If the TSVs generate an EOC-RPT signal at 10% closed vice the nominal _ 5% closed (7% allowable) then an excess positive reactivity will be added upon TSV closure.

Technical Reference(s): Technical Specification 3.3.4.2 and Table 3.3.4.2-2 T/S Bases 3 / 4.3.4, TS 3.3.4.2 & Table 3.3.4.2-2 (Attach if not previously provided)

Proposed References to be provided to applicants during examination: none

Learning Objective: MNTURBE018, Given a scenario of applicable operating conditions and access to Technical Specifications: a. Select those sections applicable to the Main Turbine. b. Evaluate Main Turbine operability and determine required action(s) based upon inoperability. c. Explain the bases for those technical specification items associated with the Main Turbine. (As available)

Question Source: Bank # 80657

Modified Bank # (Note changes or attach parent)

New

Question History: NRC 2003

Question Cognitive Level: Memory or Fundamental Knowledge X

Comprehension or Analysis

10 CFR Part 55 Content: 55.41 5, 10

55.43

Comments:

Facility: Hope Creek

Vendor: GE

Exam Date: 2012

Exam Type: RO

Examination Outline Cross-reference:	Level	RO	SRO
	Tier #	1	
	Group #	2	
	K/A #	295010 AK1.03	
	Importance Rating	3.2	

Knowledge of the operational implications of the following concepts as they apply to HIGH DRYWELL PRESSURE : Temperature increases

Question: RO #59

Given:

- The plant was operating at 100%
- An electrical malfunction caused a loss of ALL the #2 Drywell Cooling fans (A2V212-H2V212)
- Power is still available to the #1 Drywell Cooling fans (A1V212-H1V212)
- Drywell pressure is 1.0 psig and rising 0.1 psig every five minutes
- There is NO evidence of elevated coolant system leakage in the drywell
- Turbine Building Chilled Water is in service with a supply temperature of 44°F and steady.

Which of these actions is NOT appropriate for the listed conditions?

A. VENT the Drywell.

B. ALIGN RACS to the Chilled Water System for Drywell Cooling.

C. ENSURE all of the 'A' AND 'B' Drywell Fan Cooling Coils are Open.

D. ENSURE all of the #1 Drywell Cooling Fans (A1V212-H1V212) are running in Fast Speed.

Proposed Answer: B

Explanation (Optional):

A: VENT the Drywell. **INCORRECT**, HC.OP-AB.CONT-0001 directs venting the drywell if drywell pressure is >0.75 psig. This would be an appropriate action.

B: ALIGN RACS to the Chilled Water System for Drywell Cooling. **CORRECT,** Turbine Building chilled water has NOT been lost to the drywell. RACS supply temperature is typically 70°F and procedurally limited to a low of 45°F. Aligning RACS to cool the drywell would cause drywell pressure to rise more and thus is NOT an appropriate action.

C: ENSURE all of the 'A' AND 'B' Drywell Fan Cooling Coils are Open. **INCORRECT,** With limited air flow due to the loss of ½ of the drywell cooling fans, it is critical to ensure all drywell cooling coils are open. The 'A' and 'B' coils are in series with air flow and are not associated with a particular fan, so both sets of cooling coils are still effectively capable of cooling the drywell. This would be an appropriate action.

D: ENSURE all of the #1 Drywell Cooling Fans (A1V212-H1V212) are running in Fast Speed. **INCORRECT,** With the loss of all the #2 Drywell Cooling Fans, it is critical to ensure all remaining fans are in service, this would be an appropriate action.

Technical Reference(s): OP-AB.CONT-0001 (Attach if not previously provided)

Proposed References to be provided to applicants during examination: none

Learning Objective: DWVENTE009, Regarding HC.OP-AB.CONT-0001, Drywell Pressure, be able to discuss the following items: a. Given the procedure, state the subsequent operator actions and Retainment Override including the reason for each action. b. Given a set of conditions determine if a high drywell pressure conditions exists. (As available)

Question Source: Bank # 113596

Modified Bank # (Note changes or attach parent)

New

Question History:

Question Cognitive Level: Memory or Fundamental Knowledge

Comprehension or Analysis x

10 CFR Part 55 Content: 55.41 9,10

55.43

Comments:

Facility: Hope Creek

Vendor: GE

Exam Date: 2012

Exam Type: RO

Examination Outline Cross-reference:	Level	RO	SRO
	Tier #	1	
	Group #	2	
	K/A #	295009 AK2.02	
	Importance Rating	3.9	

Knowledge of the interrelations between LOW REACTOR WATER LEVEL and the following: Reactor water level control

Question: RO #60

Following a reactor scram, setpoint setdown logic is designed to _____.

A. automatically lower the DFCS Master Level Controller setpoint to prevent a vessel overfeed when vessel level is ≤ 12.5" for at least one second

B. remove the level signal from DFCS so feed flow will match steam flow to prevent vessel overfeed when vessel level is ≤ 12.5" for at least one second

C. automatically lower the DFCS Startup Level Controller setpoint to prevent vessel overfeed when vessel level is ≤ 15" for at least one second

D. remove the total steam flow signal so feed flow will vary due to any deviation between actual and desired level only, to quickly restore level to normal when vessel level is ≤ 15" for at least one second

Proposed Answer: A

Explanation (Optional):

A: Automatically lower the DFCS Master Level Controller setpoint to prevent a vessel overfeed when vessel level is ≤ 12.5" for at least one second. **CORRECT -** The Master Controller Setpoint is electrically lowered to +14" when vessel level is below 12.5" for at least one second.

B: Remove the level signal from DFCS so feed flow will match steam flow to prevent vessel overfeed when vessel level is ≤ 12.5" for at least one second. **INCORRECT -** The level input remains so water level will be controlled automatically by DFCS. The Master Controller Setpoint is electrically lowered to +14" when vessel level is below 12.5" for at least one second.

C: Automatically lower the DFCS Startup Level Controller setpoint to prevent vessel overfeed when vessel level is ≤ 15" for at least one second. **INCORRECT -** The Master Controller Setpoint is electrically lowered to +14" when vessel level is below 12.5" for at least one second.

D: Remove the total steam flow signal so feed flow will vary due to any deviation between actual and desired level only, to quickly restore level to normal when vessel level is ≤ 15" for at least one second. **INCORRECT -** The Master Controller Setpoint is electrically lowered to +14" when vessel level is below 12.5" for at least one second.

Technical Reference(s): NOH04FWCONTC, H-1-AE-ECS-0128-03C/X (Attach if not previously provided)

Proposed References to be provided to applicants during examination: none

Learning Objective: FWCONTE004, From memory, state the purpose of the setpoint setdown unit and describe how it accomplishes its purpose, IAW Available Control Room References (As available)

Question Source: Bank #

Modified Bank # (Note changes or attach parent)

New X

Question History:

Question Cognitive Level: Memory or Fundamental Knowledge X

Comprehension or Analysis

10 CFR Part 55 Content: 55.41 7

55.43

Comments:

Facility: Hope Creek

Vendor: GE

Exam Date: 2012

Exam Type: RO

Examination Outline Cross-reference:	Level	RO	SRO
	Tier #	1	
	Group #	2	
	K/A #	295034 EK3.03	
	Importance Rating	4.0	

Knowledge of the reasons for the following responses as they apply to SECONDARY CONTAINMENT VENTILATION HIGH RADIATION : Personnel evacuation

Question: RO #61

The Unit is in OPCON 1 with irradiated fuel moves in progress on the refueling floor. Ventilation systems are lined up in the normal lineup to support plant conditions.

Then:

- An irradiated fuel bundle is dropped from the full up position
- The bundle impacts other irradiated bundles in the fuel pool
- A large amount of bubbles are observed rising from the dropped and impacted bundles
- The NEW FUEL CRITICALITY RAD HI OHA E6-A4 is in alarm
- The Filtration and Recirculation Ventilation System (FRVS) has initiated
- The Reactor Building Ventilation System (RBVS) has isolated
- The Refuel Floor evacuation alarm is sounding

Why is the Refuel Floor required to be evacuated for the above conditions?

A. The release from the damaged fuel contains O^{19} (Oxygen) AND H^{3} (Hydrogen-Tritium) and eventually enough of it will saturate the Refuel Floor and create an explosive atmosphere.

B. The release from the damaged fuel contains H^{3} (Hydrogen-Tritium) AND Kr^{90} (Krypton) and eventually enough of it will saturate the Refuel Floor and create an explosive and highly radioactive airborne atmosphere.

C. The release from the damaged fuel contains O^{19} (Oxygen) AND Xe^{135} (Xenon) and eventually enough of it will saturate the Refuel Floor and create a highly radioactive airborne atmosphere.

D. The release from the damaged fuel contains Kr^{90} (Krypton) AND Xe^{135} (Xenon) and eventually enough of it will saturate the Refuel Floor and create a highly radioactive airborne atmosphere.

Proposed Answer: D

Explanation (Optional):

A: The release from the damaged fuel contains O^{19} (Oxygen) AND H^3 (Hydrogen-Tritium) and eventually enough of it will saturate the Refuel Floor and create an explosive atmosphere. **INCORRECT**, Oxygen and Hydrogen are by-products of the radiolytic decomposition of water and would be expected in the steam carryover during power operation in the reactor. They would not be expected from damaged fuel bundles, which would carry fission product gases. With FRVS in service enough air mixing and exhaust would prohibit sufficient Oxygen to accumulate to present an explosion hazard.

B: The release from the damaged fuel contains H^3 (Hydrogen-Tritium) AND Kr^{90} (Krypton) and eventually enough of it will saturate the Refuel Floor and create an explosive and highly radioactive airborne atmosphere. **INCORRECT,** Hydrogen is a by-product of the radiolytic decomposition of water and would be expected in the steam carryover during power operation in the reactor. It would not be expected from damaged fuel bundles, which would carry fission product gases, which would be both Xenon and Krypton. With FRVS in service enough air mixing and exhaust would prohibit sufficient Hydrogen to accumulate to present an explosion hazard.

C: The release from the damaged fuel contains O^{19} (Oxygen) AND Xe^{135} (Xenon) and eventually enough of it will saturate the Refuel Floor and create a highly radioactive airborne atmosphere. **INCORRECT,** Oxygen is a by-product of radiolytic decomposition of water and would be expected in the steam carryover during power operation in the reactor. It would not be expected from damaged fuel bundles, which would carry fission product gases, which would be both Krypton and Xenon. With FRVS in service enough air mixing and exhaust would prohibit sufficient Oxygen to accumulate to present an explosion hazard.

D: The release from the damaged fuel contains Kr^{90} (Krypton) AND Xe^{135} (Xenon) and eventually enough of it will saturate the Refuel Floor and create a highly radioactive airborne atmosphere. **CORRECT,** damaged fuel bundles carry fission product gases, which would be both Krypton and Xenon and when released due to damaged cladding/fuel bundles would create a radioactive airborne atmosphere on the refuel floor.

Technical Reference(s): NOH01CHEMREC (Attach if not previously provided)

Proposed References to be provided to applicants during examination: none

Learning Objective: CHEMREE005, Given plant conditions involving fuel damage, appraise the radiological concerns associated with the following, IAW the Student Handout: a. Post accident sampling, b. Access to plant buildings, c. Transport of radioactive fluids SRO ONLY (As available)

Question Source: Bank #

Modified Bank # (Note changes or attach parent)

New X

Question History:

Question Cognitive Level:	Memory or Fundamental Knowledge		X
	Comprehension or Analysis		
10 CFR Part 55 Content:	55.41	11, 12	
	55.43		

Comments:

Facility: Hope Creek

Vendor: GE

Exam Date: 2012

Exam Type: RO

Examination Outline Cross-reference:	Level	RO	SRO
	Tier #	1	
	Group #	2	
	K/A #	295035 EA1.02	
	Importance Rating	3.8	

Ability to operate and/or monitor the following as they apply to SECONDARY CONTAINMENT HIGH DIFFERENTIAL PRESSURE: SBGT/FRVS

Question: RO #62

Given:

The plant is operating at 100%.

OHA E6-A3 "REFUEL FLR EXH RAD ALARM/TRBL" alarms
OHA E6-A5 "RB EXH RADIATION ALARM/TRBL" alarms
OHA E6-C5 "RBVS & WING AREA HVAC PNL 10C382" alarms

The Reactor Operator reports these readings from the RM11:

1SP-RE-4856A 1.9E-3 µCi/cc Refuel Flr Exh Channel "A"
1SP-RE-4856B 1.0E-3 µCi/cc Refuel Flr Exh Channel "B"
1SP-RE-4856C 1.1E-3 µCi/cc Refuel Flr Exh Channel "C"

1SP-RE-4857A 9.90E-4 µCi/cc Rx Bldg Exh Channel "A"
1SP-RE-4857B 1.05E-3 µCi/cc Rx Bldg Exh Channel "B"
1SP-RE-4857C 1.11E-3 µCi/cc Rx Bldg Exh Channel "C"

What is Reactor Building Δp and what is controlling it?

A. -.25" WG, Maintained by RBVS

B. -.25" WG, Maintained by FRVS

C. -.55" WG, Maintained by RBVS

D. -.55" WG, Maintained by FRVS

Proposed Answer: D

Explanation (Optional):

A: -.25" WG, Maintained by RBVS (Reactor Building Ventilation System), **INCORRECT**, RBVS would be isolated due to the hi radiation signal from RB Exh rad monitors B/C channels and FRVS would be maintaining the building Δp @-.55 WG. The -.25 WG is the Tech Spec limit for secondary containment operability.

B: -.25" WG, Maintained by FRVS (Filtration, Recirculation Ventilation System), **INCORRECT,** RBVS would be isolated due to the hi radiation signal from RB Exh rad monitors B/C channels and FRVS would be maintaining the building Δp @-.55 WG. The -.25 WG is the Tech Spec limit for secondary containment operability.

C: -.55" WG, Maintained by RBVS (Reactor Building Ventilation System), **INCORRECT,** RBVS would be isolated due to the hi radiation signal from RB Exh rad monitors B/C channels and FRVS would be maintaining the building Δp @-.55 WG. The -.25 WG is the Tech Spec limit for secondary containment operability.

D: -.55" WG, Maintained by FRVS (Filtration, Recirculation Ventilation System), **CORRECT**, RBVS would be isolated due to the hi radiation signal from RB Exh rad monitors B/C channels and FRVS would be maintaining the building Δp @-.55 WG. The -.25 WG is the Tech Spec limit for secondary containment operability.

Technical Reference(s): OP-SO.GR-001, OP-AR.ZZ-019 (Attach if not previously provided)

Proposed References to be provided to applicants during examination: none

Learning Objective: SECCONE007, From memory, briefly describe how a slight negative pressure is maintained in the reactor building during abnormal (accident) conditions and state the value at which it is maintained. (As available)

Question Source: Bank #

Modified Bank # (Note changes or attach parent)

New X

Question History:

Question Cognitive Level: Memory or Fundamental Knowledge X

Comprehension or Analysis

10 CFR Part 55 Content: 55.41 7, 9

55.43

Comments:

Facility: Hope Creek

Vendor: GE

Exam Date: 2012

Exam Type: RO

Examination Outline Cross-reference:	Level	RO	SRO
	Tier #	1	
	Group #	2	
	K/A #	295036 EA2.02	
	Importance Rating	3.1	

Ability to determine and/or interpret the following as they apply to SECONDARY CONTAINMENT HIGH SUMP/AREA WATER LEVEL : Water level in the affected area

Question: RO #63

Given:

- The plant has reduced power to 95%
- The Reactor Building Operator (RBEO) reports that when they open the water-tight door into the RACS room, water spills over the lip of the door
- OHA A2-D2 RACS PUMP ROOM FLOODED has alarmed

Investigation reveals that ALL systems remain normally aligned.

Which of the following describes action(s) to be taken for the above conditions?

A. Enter EO.ZZ-103/4, Reactor Building & Rad Release Control AND Runback Recirc to minimum AND LOCK the mode switch in SHUTDOWN.

B. Enter EO.ZZ-103/4, Reactor Building & Rad Release Control AND commence a normal plant shutdown AND enter IO.ZZ-004, Shutdown From Rated Power To Cold Shutdown.

C. Ensure isolation of EA-HV-2203 LOOP A RACS HX HDR SUP AND EA-HV-2204 LOOP B RACS HX HDR AND enter AB.COOL-003 Reactor Auxiliary Cooling.

D. Ensure isolation of EA-HV-2207 RACS HX HDR INLET VLV AND EA-HV-2346 RACS HX HDR OUTLET VLV AND enter AB.COOL-005 Total Loss of Station Service Water.

Proposed Answer: C

Explanation (Optional):

A: Enter EO.ZZ-0103/4, Reactor Building & Rad Release Control AND Runback Recirc to minimum AND LOCK the mode switch in SHUTDOWN. **INCORRECT**, the RACS room is not one the

areas listed on Table 2 of EOP-103/4 and no actions from EOP-103/4 should be taken.

B: Enter EO.ZZ-0103/4, Reactor Building & Rad Release Control AND commence a normal plant shutdown AND enter IO.ZZ-0004, Shutdown From Rated Power To Cold Shutdown. **INCORRECT,** the RACS room is not one the areas listed on Table 2 of EOP-103/4 and no actions from EOP-103/4 should be taken.

C: Ensure EA-HV-2203 LOOP A RACS HX HDR SUP AND EA-HV-2204 LOOP B RACS HX HDR AND enter AB.COOL-003 Reactor Auxiliary Cooling. **CORRECT,** IAW OP-SO.ED-001, Service Water valves EA-HV-2203/4 isolate on RACS room flooded, as activated from LSH-2365A/B. Either level switch will cause RACS Pump Room flooded OHA. Room flooded is an entry condition for AB.COOL-003

D: Ensure EA-HV-2207 RACS HX HDR INLET VLV AND EA-HV-2346 RACS HX HDR OUTLET VLV AND enter AB.COOL-0001 Station Service Water. **INCORRECT,** IAW OP-SO.ED-001, Service Water valves EA-HV-2203/4 isolate on RACS room flooded, as activated from LSH-2365A/B. Either level switch will cause RACS Pump Room flooded OHA. The EA-HV-2207/2346 are isolated from LSH-2365C which does NOT cause the OHA. Room flooded is an entry condition for AB.COOL-003 not AB.COOL-005.

Technical Reference(s): AB.COOL-001 AB.COOL-003, OP-AR.ZZ-002, EOP-103/4 (Attach if not previously provided)

Proposed References to be provided to applicants during examination: none

Learning Objective: SERWATE006, Give a brief description of what happens to the Station Service Water System on the following plant conditions: a. LOCA, b. LOP, c. Pipe Break - In RACS HX Room - Safety-related piping. (As available)

Question Source: Bank #

Modified Bank # (Note changes or attach parent)

New X

Question History:

Question Cognitive Level: Memory or Fundamental Knowledge

Comprehension or Analysis X

10 CFR Part 55 Content: 55.41 7, 10

55.43

Comments:

Facility: Hope Creek

Vendor: GE

Exam Date: 2012

Exam Type: RO

Examination Outline Cross-reference:	Level	RO	SRO
	Tier #	1	
	Group #	2	
	K/A #	295008 2.1.27	
	Importance Rating	3.9	

Conduct of Operations: Knowledge of system purpose and / or function. (High Reactor Water Level)

Question: RO #64

The Reactor Feedwater Pumps are automatically tripped on a high reactor water level signal to prevent…

A. main steam line piping and hanger damage due to filling the main steam lines.

B. feedwater line damage due to increasing pump discharge flow rate and head.

C. feed pump turbine damage due to water erosion of feed pump turbine nozzles.

D. damage to main steam drain lines from potential two phase flow.

Proposed Answer: A

Explanation (Optional):

A: main steam line piping and hanger damage due to filling the main steam lines. **CORRECT**, Feed pumps are tripped on level 8 (+54") to prevent overfilling the reactor and flooding the main steam lines which could cause damage to the main turbine.

B: feedwater line damage due to increasing pump discharge flow rate and head. **INCORRECT,** discharge pressure exceeding design limits is prohibited by a high discharge pressure (1700 psi) trip of the RFPT, reactor vessel level has no effect on discharge pressure of the feed pump

C: feed pump turbine damage due to water erosion of turbine nozzles. **INCORRECT,** the RFPT are not a susceptible to water erosion as the main turbine due to path LP and HP steam must take to get to the feed pump turbine. Turbine nozzle erosion is a concern for the main turbine.

D: damage to main steam drain lines from potential two phase flow. **INCORRECT**, due to recent events, two-phase flow is a concern on main steam line drains, however this is not dependent on reactor vessel level and can occur at any vessel level.

Technical Reference(s): NOH04RXINSTC (Attach if not previously provided)

Proposed References to be provided to applicants during examination: none

Learning Objective: RXINSTE010, Given a list of reactor vessel pressure and/or level setpoints, determine the automatic action that occurs (As available)

Question Source: Bank # 68855

Modified Bank # (Note changes or attach parent)

New

Question History: NRC 2002

Question Cognitive Level: Memory or Fundamental Knowledge X

Comprehension or Analysis

10 CFR Part 55 Content: 55.41 7, 10

55.43

Comments:

Facility: Hope Creek

Vendor: GE

Exam Date: 2012

Exam Type: RO

Examination Outline Cross-reference:	Level	RO	SRO
	Tier #	1	
	Group #	2	
	K/A #	295020 AK3.06	
	Importance Rating	3.3	

Knowledge of the reasons for the following responses as they apply to INADVERTENT CONTAINMENT ISOLATION: Suppression pool water level response.

Question: RO #65

Given:

HPCI is presently running on min flow with its injection valves closed.

Then:

A spurious isolation signal is received and the BJ-HV-F042 Torus Suction valve, strokes full closed after the BJ-HV-F004 CST Suction valve strokes full open. All other containment parameters are normal.

What are the consequences (if any) of BJ-HV-F042 stroking closed with the above conditions?

A. NO consequences, system will continue to run on min flow until secured.

B. Torus level will start to rise because CST water is now being diverted to the torus.

C. Torus level will start to lower because torus water is now being diverted to the CST.

D. HPCI will trip on low suction pressure after 15 minutes.

Proposed Answer: B

Explanation (Optional):

A: NO consequences, system will continue to run on min flow until secured. **INCORRECT**, With suction on the CST and min flow discharging to the Torus, Torus level will begin to rise and actions must be taken to maintain level within the Tech Spec limits 74.5" – 78.5".

B: Torus level will start to rise because CST water is now being diverted to the torus. **CORRECT**, With suction on the CST and min flow discharging to the Torus, Torus level will begin to rise and

actions must be taken to maintain level within the Tech Spec limits 74.5" – 78.5".

C: Torus level will start to lower because torus water is now being diverted to the CST. **INCORRECT**, With suction on the CST and min flow discharging to the Torus, Torus level will begin to rise and actions must be taken to maintain level within the Tech Spec limits 74.5" – 78.5".

D: System will trip on low suction pressure. **INCORRECT**, With suction on the CST and min flow discharging to the Torus, Torus level will begin to rise and actions must be taken to maintain level within the Tech Spec limits 74.5" – 78.5". With CST suction valve open there will be adequate suction pressure and system will not trip.

Technical Reference(s): OP-SO.BJ-001, NOH01HPCI00 (Attach if not previously provided)

Proposed References to be provided to applicants during examination: none

Learning Objective: HPCI00E012, Given plant conditions, determine the HPCI System response to any of the following IAW control room references: a. Low CST level (HPCI in operation) b. High Suppression Pool level (HPCI in operation) c. Loss of 250 VDC d. Loss of 480 VAC e. Loss of 125 VDC (As available)

Question Source: Bank #

Modified Bank # (Note changes or attach parent)

New X

Question History:

Question Cognitive Level: Memory or Fundamental Knowledge

Comprehension or Analysis X

10 CFR Part 55 Content: 55.41 8, 10

55.43

Comments:

Facility: Hope Creek

Vendor: GE

Exam Date: 2012

Exam Type: RO

Examination Outline Cross-reference:	Level	RO	SRO
	Tier #	3	
	Group #		
	K/A #	2.1.4	
	Importance Rating	3.3	

Knowledge of individual licensed operator responsibilities related to shift staffing, such as medical requirements, “no-solo” operation, maintenance of active license status, 10CFR55, etc.

Question: RO #66

A licensed Reactor Operator has worked the following schedule over the past quarter (April thru June)
April 1 - Off
April 2 - 12 hour day shift as RO
April 3 - 12 hour day shift as RO
April 4 - 12 hour day shift as RO
April 5 - Off
April 6 - Off
April 7 - Off
April 8 - 12 hour night shift as RO
April 9 - 8 hour night shift as RO, (went home sick)
April 10 Through June 30 – Off Shift due to illness

All licensed operator training is up to date.
You've received medical clearance to stand watch.

Which one of the following describes the status of your license and an additional reactivation requirement, if any, to stand watch on July 1st IAW OP-AA-105-102 "NRC ACTIVE LICENSE MAINTENANCE?

A. The license is Active because they stood the required minimum watch standing hours for the previous quarter. NO additional requirements are needed to stand watch on 7/1.

B. The license is Inactive. They must perform shift functions under the sole direct supervision of an active licensed RO for at least 40 hours as part of the reactivation.

C. The license is Inactive. They must perform shift functions under the sole direct supervision of ONLY an active licensed SRO for at least 40 hours as part of the reactivation.

D. The license is Inactive. They are required to perform shift functions under the sole direct supervision of an active licensed RO for seven (7) eight hour shifts OR five (5) 12 hour shifts as part of the reactivation.

Proposed Answer: B

Explanation (Optional):

A: Your license is Active because you stood the required minimum watch standing hours for the previous quarter. NO additional requirements are needed to stand watch on 7/1. **INCORRECT**. License is inactive. Per OP-AA-105-102 4.1.1.1, previous quarter requirements not met, requires seven 8-hour or five 12-hour shifts to maintain an active RO license. Total hours on shift is only 4 12-hour shifts for 48 hours and an 8-hour incomplete shift for a total of 56 hours, which does not satisfy the requirements.

B: Your license is Inactive. You must perform shift functions under the sole direct supervision of an active licensed RO for at least 40 hours as part of the reactivation. **CORRECT**. Your license is Inactive. Per OP-AA-105-102 4.1.1.1, previous quarter requirements not met, requires seven 8-hour or five 12-hour shifts to maintain an active RO license. Total hours on shift is only 4 12-hour shifts for 48 hours and an 8-hour incomplete shift for a total of 56 hours, which does not satisfy the requirements.

C: Your license is Inactive. You must perform shift functions under the sole direct supervision of ONLY an active licensed SRO for at least 40 hours as part of the reactivation. **INCORRECT** Per

OP-AA-105-102, 4.2.1 an RO should be used as appropriate, but an SRO is NOT the only qualifying watch-stander position. REACTIVATE an RO or SRO license to an "active status" by performing 40 hours of shift functions in the presence and under the sole direct supervision of an active RO or SRO, as appropriate and in the position to which the individual will be assigned.

D: Your license is Inactive. You are required to perform shift functions under the sole direct supervision of an active licensed RO for seven (7) eight hour shifts OR five (5) 12 hour shifts as part of the reactivation. **INCORRECT,** These are the requirements for maintaining an active license. Per OP-A-105-102, 4.2.1 REACTIVATE an RO or SRO license to an "active status" by performing 40 hours of shift functions in the presence and under the sole direct supervision of an active RO or SRO, as appropriate and in the position to which the individual will be assigned.

Technical Reference(s): OP-AA-105-102 NRC Active License Maintenance (Attach if not previously provided)

Proposed References to be provided to applicants during examination: none

Learning Objective: NOH04ADM0, Provided access to control room references, determine the requirements for maintaining an operator license active, IAW OP-AA-105-102 (As available)

Question Source: Bank # 119575

Modified Bank # (Note changes or attach parent)

New

Question History: NRC 2009

Question Cognitive Level: Memory or Fundamental Knowledge X

Comprehension or Analysis

10 CFR Part 55 Content: 55.41 10

55.43

Comments:

Facility: Hope Creek

Vendor: GE

Exam Date: 2012

Exam Type: RO

Examination Outline Cross-reference:	Level	RO	SRO
	Tier #	3	
	Group #		
	K/A #		2.1.29
	Importance Rating	4.1	

Knowledge of how to conduct system lineups, such as valves, breakers, switches, etc.

Question: RO #67

The Unit is at 100% power. After a system outage, untagging of the HPCI system is being performed to restore HPCI operability.

The breaker for the Lube Oil Cooling Wtr Valve, BJ-HV-F059, must be closed during performance of the untagging.

IAW OP-AA-109-115, Which ONE of the following describes the required verification activities which must be completed before the system can be considered operable?

A. Independent verification is required and must be performed by a licensed operator and be documented.

B. Independent verification is required and can be performed by any qualified operator and must be documented.

C. Only concurrent verification is required and must be performed by a licensed operator and be documented.

D. Only concurrent verification is required and can be performed by any qualified operator and must be documented.

Proposed Answer: B

Explanation (Optional):

A: Independent verification is required and must be performed by a licensed operator and be documented. **INCORRECT,** ANY qualified operator can perform the independent verification, per OP-AA-109-115, step 4.7.5.

B: Independent verification is required and can be performed by any qualified operator and must be documented. **CORRECT,** per OP-AA-109-115, step 4.7.5., perform Independent Verification,

Qualified Operator, WCCS • When releasing Safety Tags, perform independent verifications on systems listed in OP-AA-108-101-1002 Att 12, HPCI is one of the systems listed on Att 12

C: Only concurrent verification is required and must be performed by a licensed operator and be documented. **INCORRECT,** OP-AA-109-115, step 4.7.5., perform Independent Verification, Qualified Operator, WCCS • When releasing Safety Tags, perform independent verifications on systems listed in OP-AA-108-101-1002 Att 12, HPCI is one of the systems listed on Att 12

D: Only concurrent verification is required and can be performed by any qualified operator and must be documented. **INCORRECT,** OP-AA-109-115, step 4.7.5., perform Independent Verification, Qualified Operator, WCCS • When releasing Safety Tags, perform independent verifications on systems listed in OP-AA-108-101-1002 Att 12, HPCI is one of the systems listed on Att 12

Technical Reference(s): OP-AA-109-115, OP-AA-108-101-1002 (Attach if not previously provided)

Proposed References to be provided to applicants during examination: none

Learning Objective: NA0015E006, Identify tagging rules and conditions IAW the Safety Tagging Procedure, OP-AA-109 and the SAP/WCM Tagging Operations Procedure, OP-AA-109-115. (As available)

Question Source: Bank # 116310

Modified Bank # (Note changes or attach parent)

New

Question History:

Question Cognitive Level: Memory or Fundamental Knowledge X

Comprehension or Analysis

10 CFR Part 55 Content: 55.41 10

55.43

Comments:

Facility: Hope Creek

Vendor: GE

Exam Date: 2012

Exam Type: RO

Examination Outline Cross-reference:	Level	RO	SRO
	Tier #	3	
	Group #		
	K/A #	2.2.6	
	Importance Rating	3.0	

Knowledge of the process for making changes to procedures.

Question: RO #68

Given:

- It is August and the plant has been de-rated (95%) due to environmental conditions
- The A SJAE is stalling and must be swapped
- Condenser vacuum is degrading very slowly

While briefing the SJAE swap, the crew notes that a critical step in the procedure is missing.

IAW OP-AA-101, which of the following describes the requirement to continue this evolution?

A. Obtain verbal concurrence from the CRS to change the sequence of steps.

B. A procedure change request is required and an on-the-spot-change can be made.

C. A procedure change request is required and an on-the-spot change CAN NOT be made.

D. Complete the evolution as written then perform a permanent revision change after the evolution is complete.

Proposed Answer: B

Explanation (Optional):

A: Obtain verbal concurrence from the CRS to change the sequence of steps. **INCORRECT,** Written documentation is required (On-the-spot change) See step 4.1.5 of OP-AA-101-111-1003.

B: A procedure change request is required and an on-the-spot-change can be made. **CORRECT,** An on-the-spot-change (OTSC) may used. See step 4.1.5 of OP-AA-101-111-1003.

C: A procedure change request is required and an on-the-spot change CAN NOT be made. **INCORRECT,** An on-the-spot change may be used. See step 4.1.5 of OP-AA-101-111-1003.

D: Complete the evolution as written then perform a permanent revision change after the evolution is complete. **INCORRECT,** If an error is found in the procedure actions must be taken to correct the issue before proceeding. See step 4.1.5 of OP-AA-101-111-1003.

Technical Reference(s): OP-AA-101-111-1003, HU-AA-104-101, AD-AA-101-101 (Attach if not previously provided)

Proposed References to be provided to applicants during examination: none

Learning Objective: ADMPROE003, From Memory Describe the conditions under which performance of a procedure should be stopped, and the necessary subsequent actions IAW OP-AA-101-111-1003, and HU-AA-104-101 (As available)

Question Source: Bank #

Modified Bank # (Note changes or attach parent)

New X

Question History:

Question Cognitive Level: Memory or Fundamental Knowledge X

Comprehension or Analysis

10 CFR Part 55 Content: 55.41 10

55.43

Comments:

Facility: Hope Creek

Vendor: GE

Exam Date: 2012

Exam Type: RO

Examination Outline Cross-reference:	Level	RO	SRO
	Tier #	3	
	Group #		
	K/A #	2.2.39	
	Importance Rating	3.9	

Knowledge of less than or equal to one hour Technical Specification action statements for systems.

Question: RO #69

The plant is operating at 75% power
It is 06:17 and you note while taking logs:

- Drywell average temperature is 137° F
- Drywell Pressure is 1.2 psig
- Suppression Pool water level is 74"

From the readings above what actions are required to satisfy Technical Specifications?

A. Restore suppression pool level within normal band by 07:17.

B. Restore drywell pressure within normal band by 07:17.

C. Restore both drywell average temperature AND suppression pool level by 18:17.

D. Restore both drywell average temperature AND drywell pressure by 18:17.

Proposed Answer: A

Explanation (Optional):

A: Suppression Pool Level ONLY. (2) 07:17, **CORRECT,** per T/S 3.6.2.1, "a. With the suppression chamber water level outside the above limits, restore the water level to within the limits within 1 hour or be in at least HOT SHUTDOWN within the next 12 hours and in COLD SHUTDOWN within the following 24 hours."

B: Drywell Pressure ONLY. (2) 07:17, **INCORRECT**, per T/S 3.6.1.6, "With the drywell and/or suppression chamber internal pressure outside of the specified limits, restore the internal pressure to within the limit within 1 hour or be in at least HOT SHUTDOWN within the next 12 hours and in COLD SHUTDOWN within the following 24 hours." Action is required within 1 hour

if DW pressure exceeds 1.5 psig

C: (1) Drywell Average Temperature AND Suppression Pool Level. (2) 18:17, **INCORRECT,** per T/S 3.6.1.7, "With the drywell average air temperature greater than 135°F, reduce the average air temperature to within the limit within 8 hours or be in at least HOT SHUTDOWN within the next 12 hours and in COLD SHUTDOWN within the following 24 hours." Per T/S 3.6.2.1, "a. With the suppression chamber water level outside the above limits, restore the water level to within the limits within 1 hour or be in at least HOT SHUTDOWN within the next 12 hours and in COLD SHUTDOWN within the following 24 hours."

D: (1) Drywell Average Temperature AND Drywell Pressure. (2) 18:17, **INCORRECT**, per T/S 3.6.1.7, "With the drywell average air temperature greater than 135°F, reduce the average air temperature to within the limit within 8 hours or be in at least HOT SHUTDOWN within the next 12 hours and in COLD SHUTDOWN within the following 24 hours. Per T/S 3.6.1.6, "With the drywell and/or suppression chamber internal pressure outside of the specified limits, restore the internal pressure to within the limit within 1 hour or be in at least HOT SHUTDOWN within the next 12 hours and in COLD SHUTDOWN within the following 24 hours." Action is required within 1 hour if DW pressure exceeds 1.5 psig.

Technical Reference(s): Tech Specs, 3.6.1.6, 3.6.1.7, and 3.6.2.1 (Attach if not previously provided)

Proposed References to be provided to applicants during examination: none

Learning Objective: TECSPCE013, Given specific plant operating conditions which require operator actions within 1 hour From Memory select the correct Technical Specification action(s). (As available)

Question Source: Bank #

Modified Bank # (Note changes or attach parent)

New X

Question History:

Question Cognitive Level: Memory or Fundamental Knowledge X

Comprehension or Analysis

10 CFR Part 55 Content: 55.41 10

55.43

Comments:

Facility: Hope Creek

Vendor: GE

Exam Date: 2012

Exam Type: RO

Examination Outline Cross-reference:

Level	RO	SRO
Tier #	3	
Group #		
K/A #	2.3.11	
Importance Rating	3.8	

Ability to control radiation releases.

Question: RO #70

During a declared ALERT due to high offsite release rate following a plant transient, the Turbine Building Equipment Operator reports that he has discovered that the Turbine Building Ventilation System is shutdown.

Under these conditions, Turbine Building Ventilation will…

A. remain shutdown to minimize the potential for release from the plant.

B. be restarted to provide an elevated, monitored release point for radioactive material.

C. be restarted, but only if it will result in no additional release of radioactive material.

D. be restarted or left shutdown based on area temperatures AND the potential for additional release.

Proposed Answer: B

Explanation (Optional):

A: remain shutdown to minimize the potential for release from the plant. **INCORRECT**, this may cause an unmonitored ground level release

B: be restarted to provide an elevated, monitored release point for radioactive material. **CORRECT,** per EOP-104 bases, RR-4, "Operating HVAC preserves building accessibility and discharges radioactivity through an elevated monitored release point.

C: be restarted, but only if it will result in no additional release of radioactive material. **INCORRECT,** not restarting could cause an unmonitored release

D: may be restarted or left shutdown based on area temperatures and the potential for additional release. **INCORRECT,** not restarting could cause an unmonitored release

Technical Reference(s): EOP-103/4 Bases (Attach if not previously provided)

Proposed References to be provided to applicants during examination: none

Learning Objective: EOP103E006, Given any step in the procedure, describe the reason for performance of that step and/or expected system response to control manipulations prescribed by the step. (As available)

Question Source: Bank # 56131

Modified Bank # (Note changes or attach parent)

New

Question History:

Question Cognitive Level: Memory or Fundamental Knowledge X

Comprehension or Analysis

10 CFR Part 55 Content: 55.41 10, 11, 12

55.43

Comments:

Facility: Hope Creek

Vendor: GE

Exam Date: 2012

Exam Type: RO

Examination Outline Cross-reference:	Level	RO	SRO
	Tier #	3	
	Group #		
	K/A #	2.3.12	
	Importance Rating	3.2	

Knowledge of Radiological Safety Principles pertaining to licensed operator duties, such as containment entry requirements, fuel handling responsibilities, access to locked high-radiation areas, aligning filters, etc.

Question: RO #71

Radiation Protection technicians have surveyed the Refuel Floor Reactor Head Laydown Area during an outage and obtained the following results:

Area Dose Rates one foot from the source: 72 mR/Hr
Airborne Concentration: 0.15 DAC
Smear Results: 750 Dpm/100 Cm^2 gamma

Based on these results the area will be posted as a:

I. Radiation Area
II. High Radiation Area
III. Contaminated Area
IV. Airborne Radioactivity Area

A. I and IV

B. II and IV

C. II and III

D. I and III

Proposed Answer: A

Explanation (Optional):

A: I, and IV, **CORRECT**, Radiation area = >5 mRem/hr to 80 mRem/hr. Airborne Radioactivity area = >10% or .10 DAC.

B: II, and IV, **INCORRECT**, Not a High radiation area = >80 mRem/hr.

C: II, and III, **INCORRECT**, Not a Contaminated Area; Contamination Area= >1000 dpm/100cm2

D: I, and III, **INCORRECT**, Not a Contaminated Area; Contamination Area= >1000 dpm/100cm2

Technical Reference(s): RP-AA-460 (Attach if not previously provided)

Proposed References to be provided to applicants during examination: none

Learning Objective: NOH04ADM024E002, From Memory (As available)
State the definition of the following terms: Contaminated Area, High Contamination Area, High Radiation Area, Locked High Radiation Area, Radiation Area Restricted Area, Very High Radiation Area, Airborne Radioactivity Area, Declared Pregnant Woman (DPW), Total Effective Dose Equivalent (TEDE) IAW RP-AA-203, Exposure Control and Authorization, RP-AA-270, Prenatal Radiation Exposure, RP-AA-376, Radiological Postings, Labeling and Marking

Question Source: Bank # 76884

Modified Bank # (Note changes or attach parent)

New

Question History:

Question Cognitive Level: Memory or Fundamental Knowledge X

Comprehension or Analysis

10 CFR Part 55 Content: 55.41 10, 11, 12

55.43

Comments:

Facility: Hope Creek

Vendor: GE

Exam Date: 2012

Exam Type: RO

Examination Outline Cross-reference:	Level	RO	SRO
	Tier #	3	
	Group #		
	K/A #	2.4.22	
	Importance Rating	3.6	

Knowledge of the bases for prioritizing safety functions during abnormal/emergency operations.

Question: RO #72

You are required to inhibit the automatic initiation of ADS during an ATWS to prevent…

A. large irregular neutron flux oscillations.

B. causing brittle fracture of the reactor vessel.

C. a power excursion due to low pressure ECCS injection.

D. exceeding 110° F Suppression Pool Temperature before boron injection is required.

Proposed Answer: C

Explanation (Optional):

A: large irregular neutron flux oscillations, **INCORRECT**, during an ATWS oscillations of neutron flux would be expected, however this is not the concern with uncontrolled injection from RHR and Core Spray.

B: causing brittle fracture of the reactor vessel, **INCORRECT,** with the reactor not shutdown, the overriding concern for uncontrolled injection from RHR and Core Spray is the power excursion caused by the relatively cool water being injected onto a critical core. Brittle fracture of the fuel cladding is more of a concern for this condition.

C: a power excursion due to low pressure ECCS injection, **CORRECT,** ADS is required to be inhibited when either reactor vessel level drops below -129" or during an ATWS. This action will prohibit the uncontrolled injection of large amounts of water from RHR and Core Spray post-blowdown, which during an ATWS would cause a power excursion fro the injection of relatively cool water on a critical reactor core.

D: exceeding 110° F Suppression Pool Temperature before boron injection is required **INCORRECT,** this concern is addressed at step LP-11, for when to lower reactor vessel level in an attempt to lower reactor power. Inhibiting ADS has no initial effect on torus temperature.

Technical Reference(s): EOP-101A Bases (Attach if not previously provided)

Proposed References to be provided to applicants during examination: none

Learning Objective: EO101AE006, Given any step of the procedure, explain the reason for performance of that step and/or evaluate the expected system response to control manipulations prescribed by that step. (As available)

Question Source: Bank #

Modified Bank # 30560 (Note changes or attach parent)

New

Question History: NRC 2005

Question Cognitive Level: Memory or Fundamental Knowledge X

Comprehension or Analysis

10 CFR Part 55 Content: 55.41 1, 10

55.43

Comments:

Facility: Hope Creek

Vendor: GE

Exam Date: 2012

Exam Type: RO

Examination Outline Cross-reference:	Level	RO	SRO
	Tier #	3	
	Group #		
	K/A #	2.4.28	
	Importance Rating	3.2	

Knowledge of procedures relating to a security event.

Question: RO #73

IAW OP-HC-108-101-1002, Key Control, security keys can only be used with the permission of the ____(1)_____ AND they are located _____(2)_____ ?

A. (1) Security Supervisor
(2) in the Shift Manager's Office

B. (1) Security Supervisor
(2) in the Remote Shutdown Panel

C. (1) SM/CRS
(2) on the Equipment Operator Building Watch key rings

D. (1) SM/CRS
(2) in the Shift Manager's Office AND Remote Shutdown Panel

Proposed Answer: D

Explanation (Optional):

A: (1) Security Supervisor; (2) in the Shift Manager's Office, **INCORRECT**, IAW OP-HC-108-101-1002, 4.3.2. Some key rings are designated to have sensitive keys such as a security key to open card reader doors. These keys are to be used for job related activities only. 1. Security keys should be used only with the permission of the SM/CRS. 2. Per attachment 2, the Shift Manager has six security keys in the SM key locker.

B: (1) Security Supervisor; (2) in the Remote Shutdown Panel, **INCORRECT**, IAW OP-HC-108-101-1002, 4.3.2. Some key rings are designated to have sensitive keys such as a security key to open card reader doors. These keys are to be used for job related activities only. 1. Security keys should be used only with the permission of the SM/CRS. 2. 2. Per attachment 4, there are five security keys in the Remote Shutdown Panel key locker

C: (1) SM/CRS; (2) on the Equipment Operator Building Watch key rings, **INCORRECT**, IAW OP-HC-108-101-1002, 4.3.2. Some key rings are designated to have sensitive keys such as a

security key to open card reader doors. These keys are to be used for job related activities only. 1. Security keys should be used only with the permission of the SM/CRS. 2. Security keys are no longer contained on the building watch key rings, however they can be assigned to the building watches as needed for specific job-related activities per step 4.3.2.

D: (1) SM/CRS; (2) in the Shift Manager's Office AND Remote Shutdown Panel, **CORRECT**, IAW OP-HC-108-101-1002, 4.3.2. Some key rings are designated to have sensitive keys such as a security key to open card reader doors. These keys are to be used for job related activities only. 1. Security keys should be used only with the permission of the SM/CRS. 2. Per attachment 2, the Shift Manager has six security keys in the SM key locker and attachment 4, there are five security keys in the Remote Shutdown Panel key locker.

Technical Reference(s): OP-HC-108-101-1002 (Attach if not previously provided)

Proposed References to be provided to applicants during examination: none

Learning Objective: NOH04ADM065E002, From memory State when a security key can be used and what needs to be done if a security key is lost. OP-HC-108-101-1002. (As available)

Question Source: Bank #

Modified Bank # (Note changes or attach parent)

New X

Question History:

Question Cognitive Level: Memory or Fundamental Knowledge X

Comprehension or Analysis

10 CFR Part 55 Content: 55.41 10

55.43

Comments:

Facility: Hope Creek

Vendor: GE

Exam Date: 2012

Exam Type: RO

Examination Outline Cross-reference:	Level	RO	SRO
	Tier #	3	
	Group #		
	K/A #	2.2.22	
	Importance Rating	4.0	

Knowledge of limiting conditions for operations and safety limits.

Question: RO #74

Given:

- Reactor power is 40%

Then,

- ALL Turbine Bypass Valves fail OPEN
- MSIVs FAIL to automatically close.

Operators close the MSIVs manually

PRIOR to MSIV closure, which of the following would indicate a safety limit violation had occurred?

A. Reactor power is 25% and RPV pressure is 775 psig.

B. Reactor power is 25% and RPV pressure is 800 psig.

C. Reactor power is 20% and RPV pressure is 775 psig.

D. Reactor power is 20% and RPV pressure is 800 psig.

Proposed Answer: A

Explanation (Optional):

A: Reactor power is 25% and RPV pressure is 775 psig. **CORRECT** – Tech Spec safety limit 2.1.1, 2.1.1, THERMAL POWER shall not exceed 24% of RATED THERMAL POWER with the reactor vessel steam dome pressure less than 785 psig or core flow less than 10% of rated flow. Applies in modes 1 and 2. Power at 40% is only possible in mode 1.

B: Reactor power is 25% and RPV pressure is 800 psig. **INCORRECT** – Tech Spec safety limit 2.1.1, 2.1.1, THERMAL POWER shall not exceed 24% of RATED THERMAL POWER with the reactor vessel steam dome pressure less than 785 psig or core flow less than 10% of rated flow. Applies in modes 1 and 2. Power at 40% is only possible in mode 1. If pressure was 800 PSIA would equate to 785 PSIG.

C: Reactor power is 20% and RPV pressure is 775 psig. **INCORRECT** – Tech Spec safety limit 2.1.1, 2.1.1, THERMAL POWER shall not exceed 24% of RATED THERMAL POWER with the reactor vessel steam dome pressure less than 785 psig or core flow less than 10% of rated flow. Applies in modes 1 and 2. Power at 40% is only possible in mode 1.

D: Reactor power is 20% and RPV pressure is 800 psig. **INCORRECT** – Tech Spec safety limit 2.1.1, 2.1.1, THERMAL POWER shall not exceed 24% of RATED THERMAL POWER with the reactor vessel steam dome pressure less than 785 psig or core flow less than 10% of rated flow. Applies in modes 1 and 2. Power at 40% is only possible in mode 1. If pressure was 800 PSIA would equate to 785 PSIG.

Technical Reference(s): Tech Spec 2.1.1 Amendment No. 174 (Attach if not previously provided)

Proposed References to be provided to applicants during examination: none

Learning Objective: TECSPCE001 State the four (4) Safety Limits in terms of conditions. (As available)

Question Source: Bank # 56697

Modified Bank # (Note changes or attach parent)

New

Question History:

Question Cognitive Level: Memory or Fundamental Knowledge X

Comprehension or Analysis

10 CFR Part 55 Content: 55.41 10

55.43

Comments:

Facility: Hope Creek

Vendor: GE

Exam Date: 2012

Exam Type: RO

Examination Outline Cross-reference:	Level	RO	SRO
	Tier #	3	
	Group #		
	K/A #	2.4.18	
	Importance Rating	3.3	

Knowledge of the specific bases for EOPs.

Question: RO #75

Following a reactor scram with a Station Blackout, the plant is being depressurized using the Safety Relief Valves (SRV).

Why is a depressurization accomplished with "sustained" SRV openings?

A. Due to the loss of 1E bus power, this reduces probability of a RCIC isolation on high exhaust pressure.

B. Due to the loss of 1E bus power, this avoids high local temperatures which may result from insufficient suppression pool cooling.

C. Due to pneumatic supply (PCIG and instrument air) being lost to the SRVs, sustained SRV opening should be utilized to maximize cooldown rate, including exceeding 100°F/hr before valve operation is lost.

D. Due to pneumatic supply (PCIG and instrument air) being lost to the SRVs, this ensures the SRV accumulator pneumatic supply is available and adequate for later use if the Emergency Operating Procedures require SRVs be opened for rapid depressurization of the RPV (e.g. Emergency Depressurization).

Proposed Answer: D

Explanation (Optional):

A: Due to the loss of 1E bus power, this reduces probability of a RCIC isolation on high exhaust pressure. **INCORRECT**, While torus pressure and temperature is expected to rise, it should not be high enough to exceed the high exhaust pressure trip of RCIC

B: Due to the loss of 1E bus power, this avoids high local temperatures which may result from insufficient suppression pool cooling. **INCORRECT**, This is the reason why a opening sequence

is followed and a label of the location of the SRVs is installed just above the controls for the SRVs.

C: Due to pneumatic supply (PCIG and instrument air) being lost to the SRVs, sustained SRV opening should be utilized to maximize cooldown rate, including exceeding 100°F/hr before valve operation is lost. **INCORRECT** , OP-EO.ZZ-0101, StepRC/P-6 Bases "Sustained SRV opening, instead of permitting the valves to cycle, conserves accumulator pressure when the source of pressure to the SRV pneumatic supply is isolated or otherwise out of service. Such action to reduce the number of cycles on the SRVs prolongs SRV availability should more degraded conditions later required SRVs be opened for rapid depressurization of the RPV. However, the SRVs are operated so that the cooldown rate LCO (typically 100°F/hr) is not exceeded."

D: Due to pneumatic supply (PCIG and instrument air) being lost to the SRVs, this ensures the SRV accumulator pneumatic supply is available and adequate for later use if the Emergency Operating Procedures require SRVs be opened for rapid depressurization of the RPV (e.g. Emergency Depressurization). **CORRECT**, OP-EO.ZZ-0101, StepRC/P-6 Bases Sustained SRV opening, instead of permitting the valves to cycle, conserves accumulator pressure when the source of pressure to the SRV pneumatic supply is isolated or otherwise out of service. Such action to reduce the number of cycles on the SRVs prolongs SRV availability should more degraded conditions later required SRVs be opened for rapid depressurization of the RPV.

Technical Reference(s): EOP-101 Bases (Attach if not previously provided)

Proposed References to be provided to applicants during examination: none

Learning Objective: EO101PE005, Given any step of the procedure, describe the reason for performance of that step and/or expected system response to control manipulations prescribed by that step. (As available)

Question Source: Bank # 53437

Modified Bank # (Note changes or attach parent)

New

Question History:

Question Cognitive Level: Memory or Fundamental Knowledge

Comprehension or Analysis X

10 CFR Part 55 Content: 55.41 7, 10

55.43

Comments:

Facility: Hope Creek

Vendor: GE

Exam Date: 2012

Exam Type: SRO

Examination Outline Cross-reference:	Level	RO	SRO
	Tier #		1
	Group #		1
	K/A #	295005 AA2.07	
	Importance Rating		3.6

Ability to determine and/or interpret the following as they apply to MAIN TURBINE GENERATOR TRIP : Reactor water level

Question: SRO #76

Given:

The plant was operating at 100% reactor power when a transient occurred,

The Crew reports the following indications:

- OHA A7-A5, RPV LEVEL 8
- OHA A7-B5, RPV LEVEL 7
- Reactor Narrow Range Level indicators:
  R606A-C32 @ 58"
  R606B-C32 @ 57.5"
  R606C-C32 @ 58.5"
- Main Generator output is ≈ 1275 MWe

What actions do you direct?

A. Lock the Mode Switch in Shutdown and enter AB.ZZ-000, Reactor Scram.

B. Manually trip the Main Turbine and enter EOP-101A, ATWS RPV Control.

C. Lock the Mode Switch in Shutdown and enter EOP-101A, ATWS RPV Control.

D. Take manual control of feedwater flow and lower reactor water level to its normal band using AB-RPV-004 RPV Level Control.

Proposed Answer: A

Explanation (Optional):

A: Lock the Mode Switch in Shutdown and enter AB-0000 Reactor Scram, (because the turbine remains on line above its trip setpoint.) **CORRECT** Retainment override of RPV -0004 requires locking the Mode Switch in Shutdown >50 inches RPV Level. Since level is above this value, the retainment action applies. After the scram EOP-101 entry not expected on +12.5 entry and AB-0000 Scram actions after tripping the turbine. Automatic Main turbine trip did not occur. Per OP-AA-101-111-1003 section 4.5.5, trip the main turbine upon failure of the automatic action. However the reactor must be scrammed first as directed by AB-RPV-0004 at >+50 inches.

B: Manually trip the Main Turbine and enter EOP-101A ATWS, (because the turbine remains on line above its trip setpoint and a scram should have occurred). **INCORRECT**, Not a failure to scram condition. The ECG tech bases 5.1.2.a / 5.1.2.b describes a failure for RPS to actuate or Failure of CRD to insert rods. RPS is not challenged if the turbine has not tripped.

C: Lock the Mode Switch in Shutdown and enter EOP-101A, ATWS,(because the turbine remains on line above its trip setpoint and a scram should have occurred.) **INCORRECT**, Not a failure to scram condition. The ECG tech bases 5.1.2.a / 5.1.2.b describes a failure for RPS to actuate or Failure of CRD to insert rods. RPS is not challenged if the turbine has not tripped.

D: Take manual control of feedwater flow and slowly lower reactor water level to its normal band using AB-RPV-0004 RPV Level Control, (because digital feedwater level control is malfunctioning and not controlling reactor level at the 35" setpoint.) **INCORRECT**, Retainment override of RPV -0004 requires locking the Mode Switch in Shutdown >50 inches RPV Level. Since level is above this value, the retainment action applies.

Technical Reference(s): AR.ZZ-0005 Att, A5 and B5, AB.RPV-0004, OP-AA-101-111-1003 (Attach if not previously provided)

Proposed References to be provided to applicants during examination: none

Learning Objective: ABBOP2E001, Recognize abnormal indications/alarms and/or procedural requirements for implementing Main Turbine. ABRPV4E001, Recognize abnormal indications/alarms and/or procedural requirements for implementing Reactor Level Control. (As available)

Question Source: Bank #

Modified Bank # (Note changes or attach parent)

New X

Question History:

Question Cognitive Level: Memory or Fundamental Knowledge

Comprehension or Analysis X

10 CFR Part 55 Content: 55.41

55.43 5

Comments:

Facility: Hope Creek

Vendor: GE

Exam Date: 2012

Exam Type: SRO

Examination Outline Cross-reference:	Level	RO	SRO
	Tier #		1
	Group #		1
	K/A #	295030 EA2.01	
	Importance Rating		4.2

Ability to determine and/or interpret the following as they apply to LOW SUPPRESSION POOL WATER LEVEL : Suppression pool level

Question: SRO #77

The plant is operating at 100% power when,

The Crew reports:

Torus level is 75" and dropping rapidly ≈1"/minute.

What are your actions and by what torus level are you required to order these actions?

A. Scram the reactor then emergency depressurize the RPV IAW EOP-202, Emergency Depressurization when torus level can NOT be maintained above 55".

B. Runback Recirc to minimum then scram the reactor IAW EOP-102, Primary Containment Control. when torus level can NOT be maintained above 55".

C. Runback Recirc to intermediate AND scram the reactor IAW EOP-102, Primary Containment Control. when torus level can NOT be maintained above 38.5".

D. Secure RCIC regardless of adequate core coverage IAW OP-SO.BD-0001, RCIC System Operating procedure when torus level can NOT be maintained above 30".

Proposed Answer: B

Explanation (Optional):

A: Scram the reactor and emergency depressurize the RPV when torus level is ≤ 55". **INCORRECT**, the action to emergency depressurize the RPV comes from EOP-102 step SP/L-7 and is required at 38.5" torus level NOT 55". Scramming the reactor is appropriate at 55" per step SP/L-6.

B: Runback Recirc to minimum and scram the reactor when torus level is ≤ 55". **CORRECT**, Running reactor Recirc to minimum and scramming the reactor is appropriate at 55" per step SP/L-6 EOP-102.

C: Runback Recirc to intermediate and scram the reactor when torus level is ≤ 38.5". **INCORRECT**, The action to emergency depressurize the RPV comes from EOP-102 step SP/L-7 and is required at 38.5" torus level NOT running Recirc back to intermediate. Running reactor Recirc to minimum and scramming the reactor is appropriate at 55" per step SP/L-6 EOP-102.

D: Isolate RCIC regardless on adequate core coverage when torus level is ≤ 30". **INCORRECT**, the action taken at torus level of 30" or less is to isolate HPCI regardless of adequate core cooling is assured, step SP/L-11 of EOP-102.

Technical Reference(s): EOP-102 (Attach if not previously provided)

Proposed References to be provided to applicants during examination: none

Learning Objective: PRICONE009, Given a Scenario of applicable operating conditions and access to Technical Specifications: a. Select those sections that are applicable to the Primary Containment Structure IAW HCGS Technical Specifications. b. Evaluate Primary Containment Structure operability and determine required actions based upon system operability IAW HCGS Technical Specifications. (SRO/STA ONLY) c. Explain the bases for those technical specification items associated with the Primary Containment Structure IAW HCGS technical specifications. (As available)

Bank #

Modified Bank # (Note changes or attach parent)

New X

Question History:

Question Cognitive Level: Memory or Fundamental Knowledge

Comprehension or Analysis X

10 CFR Part 55 Content: 55.41

55.43 5

Comments:

Facility: Hope Creek

Vendor: GE

Exam Date: 2012

Exam Type: SRO

Examination Outline Cross-reference:	Level	RO	SRO
	Tier #		1
	Group #		1
	K/A #	295006 AA2.02	
	Importance Rating		4.4

Ability to determine and/or interpret the following as they apply to SCRAM : Control rod position

Question: SRO #78

The plant was operating at rated conditions.

THEN, a manual scram was inserted due to a sudden degradation in condenser vacuum.

The Mode Switch was LOCKED in SHUTDOWN.

- Two rods remain FULL OUT
- RPV Level is +15 inches and rising slowly
- Suppression Pool temperature is 106°F and going up slowly
- ALL APRM DOWNSCALE lights are illuminated

Based on the above, the MAXIMUM allowed level band is…

A. +12.5" and +54" IAW EOP-101, RPV Control

B. +12.5" to +54" IAW EOP-101A, ATWS RPV Control

C. -129" to +54" IAW EOP-101A, ATWS RPV Control

D. -185" to +54" IAW EOP-101A, ATWS RPV Control

Proposed Answer: D

Explanation (Optional):

A: +12.5" and +54" IAW EOP-101, RPV Control **INCORRECT**, EOP-101A is implemented because the reactor is NOT considered Shutdown under all conditions without boron. The level band is incorrect IAW EOP-101A

B: +12.5" to +54" IAW EOP-101A, ATWS RPV Control, **INCORRECT,** The level band is incorrect IAW EOP-101A.

C: -129" and +54" IAW EOP-101A, ATWS RPV Control, **INCORRECT,** EOP-101A is implemented because the reactor is NOT considered Shutdown under all conditions without boron. The level band is incorrect IAW EOP-101A.

D: -185" to +54" IAW EOP-101A, ATWS RPV Control, **CORRECT,** Downscale lights on APRMs indicate power is ≤ 4%. The level band required is -185" to +54" IAW EOP-101A step LP-10.

Technical Reference(s): AB.ZZ-0000, EOP-101A Bases (Attach if not previously provided)

Proposed References to be provided to applicants during examination: none

Learning Objective: EO101AE006, Given any step of the procedure, explain the reason for performance of that step and/or evaluate the expected system response to control manipulations prescribed by that step. (As available)

Question Source: Bank # 125071

Modified Bank # (Note changes or attach parent)

New

Question History:

Question Cognitive Level: Memory or Fundamental Knowledge

Comprehension or Analysis X

10 CFR Part 55 Content: 55.41

55.43 5

Comments:

Facility: Hope Creek

Vendor: GE

Exam Date: 2012

Exam Type: SRO

Examination Outline Cross-reference:	Level	RO	SRO
	Tier #		1
	Group #		1
	K/A #	295021 2.4.34	
	Importance Rating		4.1

Emergency Procedures / Plan: Knowledge of RO tasks performed outside the main control room during an emergency and the resultant operational effects. (Loss of Shutdown Cooling)

Question: SRO #79

Given:

- The plant is operating at 100% power
- All systems are aligned for normal operations
- A fire started under Control Room console 10C651 causing a reactor scram
- The Control Room has been evacuated because of extreme smoke conditions
- The reactor has been depressurized to less than 80 psig with SRV's and RCIC
- "B" RHR was in Suppression Pool Cooling prior to the pump tripping due to failed control power circuit in the Remote Shutdown Panel (10C399)

What describes the system to be used to achieve Cold Shutdown, and what is the maximum cooldown rate that is permitted?

A. IAW HC.OP-SO.BC-003, RHR Alternate Cooling Modes, place Alternate Decay Heat Removal in service using "C" RHR from the field with a cooldown rate NOT to exceed 100°F/Hour.

B. IAW HC.OP-SO.BC-003, RHR Alternate Cooling Modes, place Alternate Decay Heat Removal in service using "D" RHR from the field with a cooldown rate NOT to exceed 100°F/Hour.

C. IAW HC.OP-IO.ZZ-008, Shutdown from Outside the Control Room, place Shutdown Cooling in-service using "A" RHR from the field with a cooldown rate NOT to exceed 90°F/Hour.

D. IAW HC.OP-IO.ZZ-008, Shutdown from Outside the Control Room, place Shutdown Cooling in-service using "B" RHR from the field with a cooldown rate NOT to exceed 90°F/Hour.

Proposed Answer: C

Explanation (Optional):

A: IAW HC.OP-SO.BC-0003, RHR Alternate Cooling Modes, place Alternate Decay Heat Removal in service using "C" RHR from the field with a cooldown rate NOT to exceed 90°F/Hour. **INCORRECT**, Alternate Decay Heat Removal is not available to be placed in service using IO.ZZ-0008, guidance exists in AB.RPV-0009, but not all equipment can be manipulated from the field and require access to the main control room to complete. Cooldown rate is set @ ≤ 90°F/Hour per step 5.10.7 of IO.ZZ-0008. Guidance in IO-008 is following a loss of power, that condition is not mentioned in the stem of the question.

B: IAW HC.OP-SO.BC-0003, RHR Alternate Cooling Modes, place Alternate Decay Heat Removal in service using "D" RHR from the field with a cooldown rate NOT to exceed 90°F/Hour. **INCORRECT,** Alternate Decay Heat Removal is not available to be placed in service using IO.ZZ-0008, guidance exists in AB.RPV-0009, but not all equipment can be manipulated from the field and require access to the main control room to complete. Cooldown rate is set @ ≤ 90°F/Hour per step 5.10.7 of IO.ZZ-0008. Guidance in IO-008 is following a loss of power, that condition is not mentioned in the stem of the question.

C: IAW HC.OP-IO.ZZ-0008, Shutdown from Outside the Control Room, place Shutdown Cooling in-service using "A" RHR from the field with a cooldown rate NOT to exceed 100°F/Hour. **CORRECT,** A RHR is available to be placed in service using IO.ZZ-0008, all necessary equipment can be manipulated from the field and requires NO access to the main control room to complete. Cooldown rate is set @ ≤ 90°F/Hour per step 5.10.7 of IO.ZZ-0008

D: IAW HC.OP-IO.ZZ-0008, Shutdown from Outside the Control Room, place Shutdown Cooling in-service using "B" RHR from the field with a cooldown rate NOT to exceed 100°F/Hour. **INCORRECT,** Cooldown rate is set @ ≤ 90°F/Hour per step 5.10.7 of IO.ZZ-0008 also not guidance to place in service from the breaker contained in procedure.

Technical Reference(s): IO.ZZ-008 (Attach if not previously provided)

Proposed References to be provided to applicants during examination: none

Learning Objective: IOP008E004, Apply Precautions, Limitations and Notes while executing the SHUTDOWN FROM OUTSIDE THE CONTROL ROOM Integrated Operating Procedure. (As available)

Question Source: Bank #

Modified Bank # (Note changes or attach parent)

New X

Question History:

Question Cognitive Level: Memory or Fundamental Knowledge

Comprehension or Analysis X

10 CFR Part 55 Content:	55.41	
	55.43	5

Comments:

Facility: Hope Creek

Vendor: GE

Exam Date: 2012

Exam Type: SRO

Examination Outline Cross-reference:	Level	RO	SRO
	Tier #		1
	Group #		1
	K/A #	295004 2.1.23	
	Importance Rating		4.4

Ability to perform specific system and integrated plant procedures during all modes of plant operation (Partial or Complete Loss of DC power)

Question: SRO #80

Given:

- At 07:30 Main generator output reached 1280 MWe.
- At 09:00 a common mode failure has disabled both chargers supplying the 1AD411 battery.
- Applicable Abnormal procedures have been entered.
- At 10:00 12 hr Maintenance has reported the battery chargers cannot be restored for at least 24 hours.

What crew actions are required by plant procedures?

A. Immediately Declare HPCI Inoperable and enter a 72 hour LCO.

B. Immediately Declare HPCI Inoperable and enter a 14 day LCO.

C. Commence a reactor shutdown at 11:00 and contact Station Duty Manager to make applicable notifications IAW Significant Event Reporting, OP-AA-106-101.

D. Commence a reactor shutdown at 23:00 and contact Station Duty Manager to make applicable notifications IAW Significant Event Reporting, OP-AA-106-101.

Proposed Answer: C

Explanation (Optional):

A: Immediately Declare HPCI Inoperable and enter a 72 hour LCO. **INCORRECT,** HPCI is a 250 VDC battery 10D421 and is not required to be declared INOP. This spec would only apply if one LPCI subsystem or Core Spray subsystem was also INOP.

B: Immediately Declare HPCI Inoperable and enter a 14 day LCO. **INCORRECT,** HPCI is a 250 VDC battery 10D421 and is not required to be declared INOP. Battery spec is more limiting and takes into account the other systems that are impacted by its loss.

C: Commence a reactor shutdown at 11:00 and contact Station Duty Manager to make applicable notifications IAW Significant Event Reporting - OP-AA-106-101. **CORRECT,** Tech Spec 3.8.2.1.a "With any 125 v battery and/or al associated chargers of the above required D.C. electrical power sources inoperable, restore the inoperable channel to OPERABLE status within 2 hours or be in at least HOT SHUTDOWN within the next 12 hours and in COLD SHUTDOWN within the following 24 hours". The 2 hour spec ends at 11:00. Per OP-AA-106-101, Significant Event Reporting, the Station Duty Manager (SDM) is required make notifications IAW Attachment 1, for a forced entry into a shutdown LCO of 72 hours or less.

D: Commence a reactor shutdown at 23:00 and contact Station Duty Manager to make applicable notifications IAW Significant Event Reporting - OP-AA-106-101. **INCORRECT,** Tech Spec 3.8.2.1.a "With any 125 v battery and/or al associated chargers of the above required D.C. electrical power sources inoperable, restore the inoperable channel to OPERABLE status within 2 hours or be in at least HOT SHUTDOWN within the next 12 hours and in COLD SHUTDOWN within the following 24 hours". The 2 hour spec ends at 11:00. Per OP-AA-106-101, Significant Event Reporting, the Station Duty Manager (SDM) is required make notifications IAW Attachment 1, for a forced entry into a shutdown LCO of 72 hours or less.

Technical Reference(s): Tech Specs 3.8.2.1, OP-AA-106-101 (Attach if not previously provided)

Proposed References to be provided to applicants during examination: Tech Spec 3.8.2.1 and 3.8.2.2, + bluff spec

Learning Objective: EO101LE006, Given any step of the procedure, describe the reason for performance of that step and/or expected system response to control manipulation prescribed by that step. (As available)

Question Source: Bank #

Modified Bank # 116202 (Note changes or attach parent)

New

Question History:

Question Cognitive Level: Memory or Fundamental Knowledge

Comprehension or Analysis X

10 CFR Part 55 Content: 55.41

55.43 2, 5

Comments:

Facility: Hope Creek

Vendor: GE

Exam Date: 2012

Exam Type: SRO

Examination Outline Cross-reference:	Level	RO	SRO
	Tier #		1
	Group #		1
	K/A #	295024 2.4.41	
	Importance Rating		4.6

Emergency Procedures / Plan: Knowledge of the emergency action level thresholds and classifications. (High Drywell Pressure)

Question: SRO #81

The plant is operating at 100% power

Then:

- A station blackout occurs and HPCI and RCIC are NOT available

Five (5) minutes post scram conditions are:

- Reactor Scram Complete
- Reactor Pressure 650 psig and stable
- Reactor level -165" dropping 2"/Hr
- Drywell pressure 2.5 psig rising 0.1psi/min
- Drywell temperature 190°F rising 1°/30 min
- Suppression pool level 80" rising 0.05"/Hr
- Suppression chamber temperature 140°F rising 1°F/Hr

What is the ECG classification at this time?

A. Unusual Event

B. Alert

C. Site Area Emergency

D. General Emergency

Proposed Answer: C

Explanation (Optional):

A: Unusual Event **INCORRECT**, See SAE explanation

B: Alert, **INCORRECT,** See SAE explanation

C: Site Area Emergency **CORRECT,** With reactor vessel level less than 161" (-165") and NO available feed requires a declaration of a SAE, per Fission Product Barrier table EAL 3.1.1a [3 points], EAL 3.2.1.b or 3.2.2.b [4 points] total of 7 points

D: General Emergency **INCORRECT,** see SAE explanation

Technical Reference(s): ECG Section 3.0 Barrier Table (Attach if not previously provided)

Proposed References to be provided to applicants during examination: Barrier table Sect 3.0 ECG

Learning Objective: SOB200, ECG/E-Plan/Fire & Medical Questions (As available)

Question Source: Bank #

Modified Bank # 56171 (Note changes or attach parent)

New

Question History:

Question Cognitive Level: Memory or Fundamental Knowledge

Comprehension or Analysis X

10 CFR Part 55 Content: 55.41

55.43 5

Comments:

Facility: Hope Creek

Vendor: GE

Exam Date: 2012

Exam Type: SRO

Examination Outline Cross-reference:	Level	RO	SRO
	Tier #		1
	Group #		1
	K/A #	295031 EA2.04	
	Importance Rating		4.8

Ability to determine and/or interpret the following as they apply to REACTOR LOW WATER LEVEL : Adequate core cooling

Question: SRO #82

A LOCA has occurred resulting in:

- All control rods are fully inserted
- Reactor pressure is 50 psig
- Drywell pressure is 3.5 psig
- Compensated Reactor Water level is -140" and steady
- A RHR is injecting into the reactor vessel at 10,000 gpm
- Remaining Low Pressure ECCS pumps are now available
- NO other pumps are injecting

What additional actions (if any) are required?

A. NONE, continue to inject with A RHR.

B. Inject to the vessel with B RHR at full flow IAW EOP-101 RPV Control.

C. Inject to the vessel with B, C and D RHR pumps at full flow along with one loop of Core Spray IAW EOP-206 RPV Flooding.

D. Inject to the vessel with B, C and D RHR pumps at full flow along with both loops of Core Spray IAW EOP-206 RPV Flooding.

Proposed Answer: B

Explanation (Optional):

A: NONE, continue to inject with A RHR. **INCORRECT**, Per EOP-101 step RC/L-5, "Restore AND Maintain RPV level above -129 in. RPV level control may be augmented by 1 or more Alternate Injection Systems (Table 3)" With level at -140" an additional injection system is required and B RHR is a Table 2 subsystem and should be used to restore level.

B: Inject to the vessel with B RHR at full flow IAW EOP-101 RPV Control. **CORRECT,** Per EOP-101 step RC/L-5, "Restore AND Maintain RPV level above -129 in. RPV level control may be augmented by 1 or more Alternate Injection Systems (Table 3)" With level at -140" an additional injection system is required and B RHR is a Table 2 subsystem and should be used to restore level.

C: Inject to the vessel with B, C and D RHR pumps at full flow along with one loop of Core Spray IAW EOP-206 RPV Flooding. **INCORRECT,** NO entry exists into EOP-206. Accurate level indication is available as stated in the stem, "compensated level is -140". No actions are to be performed IAW EOP-206.

D: Inject to the vessel with B, C and D RHR pumps at full flow along with both loops of Core Spray IAW EOP-206 RPV Flooding. **INCORRECT,** NO entry exists into EOP-206. Accurate level indication is available as stated in the stem, "compensated level is -140". No actions are to be performed IAW EOP-206.

Technical Reference(s): EOP-101, EOP-206 (Attach if not previously provided)

Proposed References to be provided to applicants during examination: none

Learning Objective: INADCCE006, Given a set of plant conditions, evaluate the capability of existing emergency core cooling systems to maintain adequate core cooling IAW the Student Handout. (As available)

Question Source: Bank #

Modified Bank # (Note changes or attach parent)

New X

Question History:

Question Cognitive Level: Memory or Fundamental Knowledge

Comprehension or Analysis X

10 CFR Part 55 Content: 55.41

55.43 5

Comments:

Facility: Hope Creek

Vendor: GE

Exam Date: 2012

Exam Type: SRO

Examination Outline Cross-reference:	Level	RO	SRO
	Tier #		1
	Group #		2
	K/A #	295013 AA2.01	
	Importance Rating		4.0

Ability to determine and/or interpret the following as they apply to HIGH SUPPRESSION POOL TEMPERATURE: Suppression Pool Temperature.

Question: SRO #83

The plant is operating at 100% power with HPCI pump testing in progress.

(1) Which one of the following requires HPCI to be shutdown

AND

(2) What actions are required at that temperature to satisfy Tech Specs?

A. (1) Average Suppression Pool Temp reaches 95°F.
(2) Restore average temperature to ≤ 95°F within 24 hours.

B. (1) Average Suppression Pool Temp reaches 105°F.
(2) Restore average temperature to ≤ 95°F within 24 hours.

C. (1) Any one Suppression Pool Temp sensor reaches 110°F.
(2) LOCK the mode switch in shutdown and place a loop of RHR in torus cooling.

D. (1) Any one Suppression Pool Temp sensor reaches 120°F.
(2) Depressurize the RPV to < 200 psig within 12 hours.

Proposed Answer: B

Explanation (Optional):

A: Average Suppression Pool Temp reaches 95°. Restore average temperature to ≤ 95°F within 24 hours. **INCORRECT,** IAW T/S 3.6.2.1.a.2, Maximum average temperature of 95°F during OPERATIONAL CONDITION 1 or 2, except that the maximum average temperature may be permitted to increase to: a) 105°F during testing which adds heat to the suppression chamber. b) 110°F with THERMAL POWER less than or equal to 1% of RATED THERMAL POWER. With the suppression chamber average water temperature greater than 105°F during testing which

adds heat to the suppression chamber, stop all testing which adds heat to the suppression chamber and restore the average temperature to less than 95° within 24 hours or be in at least HOT SHUTDOWN within the next 12 hours and in COLD SHUTDOWN within the following 24 hours.

B: Average Suppression Pool Temp reaches 105°F. Restore average temperature to ≤ 95°F within 24 hours. **CORRECT**, IAW T/S 3.6.2.1.a.2, Maximum average temperature of 95°F during OPERATIONAL CONDITION 1 or 2, except that the maximum average temperature may be permitted to increase to: a) 105°F during testing which adds heat to the suppression chamber. b) 110°F with THERMAL POWER less than or equal to 1% of RATED THERMAL POWER. With the suppression chamber average water temperature greater than 105°F during testing which adds heat to the suppression chamber, stop all testing which adds heat to the suppression chamber and restore the average temperature to less than 95° within 24 hours or be in at least HOT SHUTDOWN within the next 12 hours and in COLD SHUTDOWN within the following 24 hours.

C: Any one Suppression Pool Temp sensor reaches 110°F. LOCK the mode switch in shutdown and place a loop of RHR in torus cooling. **INCORRECT,** IAW T/S 3.6.2.1.a.2, Maximum average temperature of 95°F during OPERATIONAL CONDITION 1 or 2, except that the maximum average temperature may be permitted to increase to: a) 105°F during testing which adds heat to the suppression chamber. b) 110°F with THERMAL POWER less than or equal to 1% of RATED THERMAL POWER. With the suppression chamber average water temperature greater than 110°F, place the reactor mode switch in the Shutdown position and operate at least one residual heat removal loop in the suppression pool cooling mode.

D: Any one Suppression Pool Temp sensor reaches 120°F. Depressurize the RPV to < 200 psig within 12 hours. **INCORRECT,** IAW T/S 3.6.2.1.a.2, Maximum average temperature of 95°F during OPERATIONAL CONDITION 1 or 2, except that the maximum average temperature may be permitted to increase to: a) 105°F during testing which adds heat to the suppression chamber. b) 110°F with THERMAL POWER less than or equal to 1% of RATED THERMAL POWER. 3.Maximum average temperature of 95°F during OPERATIONAL CONDITION 3, except that the maximum average temperature may be permitted to increase to 120°F with the main steam line isolation valves closed following a scram. With the suppression chamber average water temperature greater than 120°F, depressurize the reactor pressure vessel to less than 200 psig within 12 hours.

Technical Reference(s): Tech Spec 3.6.2.1.a.2 (Attach if not previously provided)

Proposed References to be provided to applicants during examination: none

Learning Objective: EOP102E004, From memory, recall the reason why average suppression pool temperature is used for determining the entry condition and subsequent actions IAW available control room references. (As available)

Question Source: Bank #

Modified Bank # (Note changes or attach parent)

New X

Question History:

Question Cognitive Level:	Memory or Fundamental Knowledge	
	Comprehension or Analysis	X
10 CFR Part 55 Content:	55.41	
	55.43	2

Comments:

Facility: Hope Creek

Vendor: GE

Exam Date: 2012

Exam Type: SRO

Examination Outline Cross-reference:	Level	RO	SRO
	Tier #		1
	Group #		2
	K/A #	295032 2.1.20	
	Importance Rating		4.6

Conduct of Operations: Ability to interpret and execute procedure steps. (High Secondary Containment Area Temperature)

Question: SRO #84

Given:

- The reactor is operating at rated power
- RCIC is in service for its quarterly surveillance test
- RCIC room temperature rises to 125° F
- The RCIC room cooler fans have both seized

The operators complete the RCIC surveillance and secure RCIC.
All surveillance data is satisfactory, however, RCIC room temperature is still ≈ 123 °F.

Then:

- Annunciator B1-A3 (HPCI PUMP ROOM FLOODED) alarms
- The Reactor Building Operator reports the leak is coming from the HPCI CST suction line between the isolation valve (BJ-HV-F004) and check valve 1-BJ-V006
- HPCI Room 4111 water level is 1.5 inches
- Operators close the CST suction valve to HPCI, BJ-HV-F004- HPCI CST SUCTION VALVE isolating the leak
- The Torus suction valve to HPCI, BJ-HV-F042- HPCI TORUS SUCTION VALVE CAN NOT be opened

What actions are required?

A. Enter TS LCO for HPCI AND plant operation may continue for 14 days.

B. Enter TS LCO for RCIC AND plant operation may continue for 14 days.

C. Enter TS LCO for HPCI and RCIC AND a plant shutdown is required.

D. Enter the TS LCO for RCIC and HPCI being inoperable AND per EOP 103/4-Reactor Building and Rad Release Control, Runback reactor recirculation, manually scram the reactor.

Proposed Answer: C

Explanation (Optional):

A: Enter TS LCO for HPCI AND plant operation may continue for 14 days. **INCORRECT** - RCIC surveillance was satisfactory, however 2 room coolers INOPERABLE and IAW OP-HC-108-115-1001 Exhibit 2, RCIC must be declared INOP. HPCI has NO suction available, therefore a TS LCO is also required.

B: Enter TS LCO for RCIC AND plant operation may continue for 14 days. **INCORRECT** - RCIC surveillance was satisfactory, however 2 room coolers INOPERABLE and IAW OP-HC-108-115-1001 Exhibit 2, RCIC must be declared INOP. HPCI has NO suction available, therefore a TS LCO is also required.

C: Enter TS LCO for HPCI and RCIC AND a plant shutdown is required. **CORRECT** - RCIC surveillance was satisfactory, however 2 room coolers INOPERABLE and IAW OP-HC-108-115-1001 Exhibit 2, RCIC must be declared INOP. HPCI has NO torus suction and must be declared INOP and a normal plant shutdown per Tech Specs (3.0.3) is required.

D: Enter the TS LCO for RCIC and HPCI being inoperable AND per EOP 103/4-Reactor Building and Rad Release Control, Runback reactor recirculation, manually scram the reactor. **INCORRECT -** 2 areas are not above max safe, immediate shutdown NOT required. Primary system not discharging into containment. RCIC surveillance was satisfactory, however 2 room coolers INOPERABLE and IAW OP-HC-108-115-1001 Exhibit 2, RCIC must be declared INOP. HPCI has NO torus suction and must be declared INOP and a normal plant shutdown per Tech

Specs (3.0.3) is required.

Technical Reference(s): EOP-103/4 Tech Spec 3.5 (Attach if not previously provided)

Proposed References to be provided to applicants during examination: none

Learning Objective: (As available)

Question Source: Bank #

Modified Bank # 119525 (Note changes or attach parent)

New

Question History: NRC 2010

Question Cognitive Level: Memory or Fundamental Knowledge

Comprehension or Analysis X

10 CFR Part 55 Content: 55.41

55.43 2, 5

Comments:

Facility: Hope Creek

Vendor: GE

Exam Date: 2012

Exam Type: SRO

Examination Outline Cross-reference:	Level	RO	SRO
	Tier #		1
	Group #		2
	K/A #	295017 2.4.30	
	Importance Rating		4.1

Emergency Procedures / Plan; Knowledge of events related to system operation / status that must be reported to internal organizations or external agencies, such as the state, the NRC, or the transmission system operator. (High Off-site Release Rates)

Question: SRO #85

Given:

- The plant is operating at 100%.
- A NPV Noble gas high alarm was received at 09:45.
- HC.OP-AB.CONT-004, Radioactive Gaseous Release has been entered.
- Due to the unplanned release of gaseous radioactivity to the environment, you have declared an ALERT at 10:23.

At a MINIMUM and per the ECG, what agencies are REQUIRED to be notified by 11:00?

A. The states of New Jersey and Delaware and LAC Township.

B. The state of Delaware, LAC Township, and the NRC Ops Center.

C. The state of New Jersey, LAC Township, and the NRC Ops Center.

D. The states of New Jersey and Delaware and the NRC Ops Center.

Proposed Answer: A

Explanation (Optional):

A: The states of New Jersey and Delaware and LAC Township, **CORRECT**, IAW ECG Attach. 6, the states of New Jersey and Delaware are required to be notified within 15 minutes of the declaration of the ALERT, which would be 10:38. LAC Township is required to be notified to notified with 30 minutes of the declaration, which would be 10:53. The NRC Ops Center is required to be notified within 60 minutes of the declaration, which would be 11:23.

B: The state of Delaware, LAC Township, and the NRC Ops Center, **INCORRECT**, IAW ECG Attach. 6, the states of New Jersey and Delaware are required to be notified within 15 minutes of the declaration of the ALERT, which would be 10:38. LAC Township is required to be notified to notified with 30 minutes of the declaration, which would be 10:53. The NRC Ops Center is required to be notified within 60 minutes of the declaration, which would be 11:23.

C: The state of New Jersey, LAC Township, and the NRC Ops Center, **INCORRECT**, IAW ECG Attach. 6, the states of New Jersey and Delaware are required to be notified within 15 minutes of the declaration of the ALERT, which would be 10:38. LAC Township is required to be notified to notified with 30 minutes of the declaration, which would be 10:53. The NRC Ops Center is required to be notified within 60 minutes of the declaration, which would be 11:23.

D: The states of New Jersey and Delaware and the NRC Ops Center, **INCORRECT**, IAW ECG Attach. 6, the states of New Jersey and Delaware are required to be notified within 15 minutes of the declaration of the ALERT, which would be 10:38. LAC Township is required to be notified to notified with 30 minutes of the declaration, which would be 10:53. The NRC Ops Center is required to be notified within 60 minutes of the declaration, which would be 11:23.

Technical Reference(s): ECG Attachment 6, EAL 6.0 (Attach if not previously provided)

Proposed References to be provided to applicants during examination: none

Learning Objective: RMSYS0E009, Given a scenario of plant conditions, utilize HC.OP-AB.CONT-004, Radioactive Gaseous Release, and evaluate plant parameters to determine the release point/source. (As available)

Question Source: Bank #

Modified Bank # (Note changes or attach parent)

New X

Question History:

Question Cognitive Level: Memory or Fundamental Knowledge

Comprehension or Analysis X

10 CFR Part 55 Content: 55.41

55.43 2, 5

Comments:

Facility: Hope Creek

Vendor: GE

Exam Date: 2012

Exam Type: SRO

Examination Outline Cross-reference:	Level	RO	SRO
	Tier #		2
	Group #		1
	K/A #	206000 A2.04	
	Importance Rating		3.0

Ability to (a) predict the impacts of the following on the HIGH PRESSURE COOLANT INJECTION SYSTEM ; and (b) based on those predictions, use procedures to correct, control, or mitigate the consequences of those abnormal conditions or operations: A.C. failures: BWR-2,3,4

Question: SRO #86

The plant is at 100% power:

The Reactor Building Equipment Operator investigates an inadvertent trip of the 52-212053 for the FD-HV-F003 Steam Supply Outboard Isolation valve.

30 minutes later,

The on-shift electrician reports that the motor overloads are damaged and must be replaced.

Replacement and retest of the motor overloads will take two hours.

HPCI ___(1)____ AND _____(2)_____ ?

A. (1) is operable
(2) NO Tech Spec action is required

B. (1) will NOT function to inject to the vessel
(2)) T/S 3.5.1 ECCS must be entered

C. (1) will function to inject to the vessel
(2) T/S 3.6.3 Primary Containment must be entered

D. (1) will NOT function to inject to the vessel
(2) T/S 3.5.1 ECCS AND 3.6.3 Primary Containment must be entered

Proposed Answer: C

Explanation (Optional):

A: NO affect on the system, HPCI is operable AND NO Tech Spec action is required. **INCORRECT**, the system is affected in as much as the steam isolation valve FD-HV-F003 is powered from 10B212 and will not isolate on any isolation signal. T/S for containment isolation 3.6.3, must be entered as the penetration must be isolated within 4 hours or restore power back to the F003 valve.

B: HPCI will NOT function to inject to the vessel AND must be declared inoperable per T/S 3.5.1 ECCS AND the FD-HV-F003 can be manually operated. **INCORRECT,** the system will still initiate and inject to the RPV. Steam isolation valve FD-HV-F003 is powered from 10B212 and will not isolate on any isolation signal. T/S for containment isolation 3.6.3, must be entered as the penetration must be isolated within 4 hours or restore power back to the F003 valve.

C: HPCI will function to inject to the vessel, T/S 3.6.3 Primary Containment must be entered and the FD-HV-F003 can be manually operated. **CORRECT,** the system will still initiate and inject to the RPV. Steam isolation valve FD-HV-F003 is powered from 10B212 and will not isolate on any isolation signal. T/S for containment isolation 3.6.3, must be entered as the penetration must be isolated within 4 hours or restore power back to the F003 valve.

D: HPCI will NOT function to inject to the vessel, AND T/S 3.5.1 AND 3.6.3 must be entered because the equipment powered from 10B212 can NOT function automatically. **INCORRECT,** the system will still initiate and inject to the RPV. Steam isolation valve FD-HV-F003 is powered from 10B212 and will not isolate on any isolation signal. T/S for containment isolation 3.6.3, must be entered as the penetration must be isolated within 4 hours or restore power back to the F003 valve.

Technical Reference(s): Tech Spec 3.5.1, 3.6.3 (Attach if not previously provided)

Proposed References to be provided to applicants during examination: none

Learning Objective: HPCI00 E018, Given plant conditions and access to Technical Specifications: a. Select those sections, which are applicable to the HPCI System IAW HCGS technical specifications. b. Evaluate HPCI System operability and required actions based upon system operability IAW HCGS technical specifications. **(SRO Only).** c. Explain the bases for those technical specification items associated with the HPCI System IAW HCGS technical specifications. **(SRO Only)**>> (As available)

Question Source: Bank #

Modified Bank # (Note changes or attach parent)

New X

Question History:

Question Cognitive Level:	Memory or Fundamental Knowledge	
	Comprehension or Analysis	X
10 CFR Part 55 Content:	55.41	
	55.43	2, 5

Comments:

Facility: Hope Creek

Vendor: GE

Exam Date: 2012

Exam Type: SRO

Examination Outline Cross-reference:	Level	RO	SRO
	Tier #		2
	Group #		2
	K/A #	262001 A2.04	
	Importance Rating		4.2

Ability to (a) predict the impacts of the following on the A.C. ELECTRICAL DISTRIBUTION; and (b) based on those predictions, use procedures to correct, control, or mitigate the consequences of those abnormal conditions or operations: Types of loads that, if de-energized, would hinder plant operation.

Question: SRO #87

Given:

- The plant has sustained a station blackout.
- A Reactor Coolant System leak inside the drywell has reduced reactor pressure to 150 psig.
- Reactor water level has dropped to -120 inches and continues to lower at ~ 2"/minute.

Maintenance reports that they can restore the "A" EDG in ~ 20 minutes and the "C" EDG in ~ 10 minutes, but they only have enough people to work on one EDG at a time.

For the stated systems, which EDG do you direct them to restore and why?

A. Core Spray injection is required per EOP-101 in 5 minutes, restore "A" EDG first.

B. Core Spray injection is required per EOP-101 in 5 minutes, restore "C" EDG first.

C. Emergency depressurization is required per EOP-202 in 35 minutes, restore "A" EDG first to make the SRVs available.

D. Emergency depressurization is required per EOP-202 in 35 minutes, restore "C" EDG first to make the SRVs available.

Proposed Answer: A

Explanation (Optional):

A: Restore "A" EDG first because in 5 minutes Core Spray injection is required per EOP-101. **CORRECT**, In 5 minutes RPV level will be -130" and per EOP-101 step ALC-2 "Restore and maintain RPV level above -129" with 1 or more preferred injection systems (Table 1)". For injection from A Core Spray pump to be possible it is necessary to have power available to the

HV-F005A Injection valve, which is powered from the 10A401 bus, which is restored via the A EDG

B: Restore "C" EDG first because in 5 minutes Core Spray injection is required per EOP-101. **INCORRECT –** In 5 minutes RPV level will be -130" and per EOP-101 step ALC-2 "Restore and maintain RPV level above -129" with 1 or more preferred injection systems (Table 1)". For injection from C Core Spray pump to be possible it is necessary to have power available to the HV-F005A Injection valve, which is powered from the 10A401 bus, which is restored via the A EDG, not the C EDG.

C: Restore "A" EDG first to make the SRVs available, because in 35 minutes an emergency depressurization is required per EOP-202. **INCORRECT-** In 35 minutes RPV level will be -190" and per EOP-101 step ALC-10 "Before RPV level reaches -185" and ALC-11 Emergency RPV Depressurization is required" The ADS SRVs are powered from B and D channels and by not having either A or C EDG to power their respective busses, has no effect on the operation of the SRVs ability to depressurize the RPV.

D: Restore "C" EDG first to make the SRVs available, because in 35 minutes an emergency depressurization is required per EOP-202. **INCORRECT-** In 35 minutes RPV level will be -190" and per EOP-101 step ALC-10 "Before RPV level reaches -185" and ALC-11 Emergency RPV Depressurization is required" The ADS SRVs are powered from B and D channels and by not having either A or C EDG to power their respective busses, has no effect on the operation of the SRVs ability to depressurize the RPV.

Technical Reference(s): EOP-101, NOH01CSSYS0 (Attach if not previously provided)

Proposed References to be provided to applicants during examination: EOP-101, step ALC-2 thru ALC-18 only

Learning Objective: 1EAC00E003, Given a list of electrical loads (motor/unit substations), choose which are powered from the 1E 4.16KV switchgear. (As available)

Question Source: Bank #

Modified Bank # 110606 (Note changes or attach parent)

New

Question History:

Question Cognitive Level: Memory or Fundamental Knowledge X

Comprehension or Analysis

10 CFR Part 55 Content: 55.41

55.43 5

Comments:

Facility: Hope Creek

Vendor: GE

Exam Date: 2012

Exam Type: SRO

Examination Outline Cross-reference:	Level	RO	SRO
	Tier #		2
	Group #		2
	K/A #	261000 2.2.44	
	Importance Rating		4.4

Ability to interpret control room indications to verify the status and operation of a system, and understand how operator actions and directives affect plant and system conditions. (SGTS)

Question: SRO #88

While operating at 100% power, a loss of both EHC pumps required a manual scram.

- HPCI and RCIC received an auto start signal during the transient
- HC.OP-EO.ZZ-0101 has been entered
- The reactor is confirmed shutdown
- All RPV parameters are now stable

Regarding the ventilation systems in the reactor building, what actions (if any) do you direct?

A. There is no affect on the RBVS due to this transient. Continue monitoring reactor building Δp IAW OP-SO.GR-001, Reactor Building Ventilation System.

B. Verify FRVS Auto Initiation IAW OP-AB.ZZ-001, Transient Plant Conditions, and secure both A and B FRVS Vent fans per OP-SO.GR-001, Reactor Building Ventilation Operation.

C. Verify RBVS Isolation IAW the OP-SO.GR-001, Reactor Building Ventilation System and place FRVS in-service IAW OP-SO.GU-001, Filtration, Recirculation and Ventilation Operation.

D. Verify RBVS Isolation and FRVS Auto Initiation IAW OP-SO.SM-001, Isolation System Operation and secure E/F FRVS Recirc fans per OP-SO.GU-001, Filtration, Recirculation and Ventilation Operation.

Proposed Answer: D

Explanation (Optional):

A: There is no affect on the RBVS due to this transient, continue monitoring reactor building Δp IAW OP-SO.GR-001, Reactor Building Ventilation System. **INCORRECT,** All RBVS supply and exhaust fans trip and inlet and outlet dampers close due to LOCA level 2 (-38") OP-SO.SM-001

shows the isolation/start signals for both RBVS and FRVS. The OP-SO.GU-001 has guidance to secure recirc fans E/F post isolation/initiation.
Verify FRVS Auto Initiation IAW OP-AB.ZZ-001, Transient Plant Conditions, and secure both A and B FRVS Vent fans per OP-SO.GR-001, Reactor Building Ventilation Operation.

B: **INCORRECT,** All RBVS supply and exhaust fans trip and inlet and outlet dampers close due to LOCA level 2 (-38") OP-SO.SM-001 shows the isolation/start signals for both RBVS and FRVS. The OP-SO.GU-001 has guidance to secure recirc fans post isolation/initiation not the vent fans.

C: Verify RBVS Isolation IAW the OP-SO.GR-001, Reactor Building Ventilation System and place FRVS in-service IAW OP-SO.GU-001, Filtration, Recirculation and Ventilation Operation. **INCORRECT,** All RBVS supply and exhaust fans trip and inlet and outlet dampers close due to LOCA level 2 (-38") OP-SO.SM-001 shows the isolation/start signals for both RBVS and FRVS. The OP-SO.GU-001 has guidance to secure recirc fans E/F post isolation/initiation. Placing FRVS in-service would be redundant as the system has already initiated on the level 2.

D: Verify RBVS Isolation and FRVS Auto Initiation IAW OP-SO.SM-001, Isolation System Operation and secure E/F FRVS Recirc fans per OP-SO.GU-001, Filtration, Recirculation and Ventilation Operation **CORRECT,** All RBVS supply and exhaust fans trip and inlet and outlet dampers close due to LOCA level 2 (-38") OP-SO.SM-001 shows the isolation/start signals for both RBVS and FRVS. The OP-SO.GU-001 has guidance to secure recirc fans E/F post isolation/initiation.

Technical Reference(s): OP-SO.GR-001, OP-SO.GU-001 (Attach if not previously provided)

OP-AB.ZZ-001, OP-SO.SM-001

Proposed References to be provided to applicants during examination: none

Learning Objective: RBVENTE011, Given plant conditions, summarize/identify how the Reactor Building Ventilation System responds to a LOP and/or LOCA. (As available)

Question Source: Bank #

Modified Bank # (Note changes or attach parent)

New X

Question History:

Question Cognitive Level: Memory or Fundamental Knowledge X

Comprehension or Analysis

10 CFR Part 55 Content: 55.41

55.43 5

Comments:

Facility: Hope Creek

Vendor: GE

Exam Date: 2012

Exam Type: SRO

Examination Outline Cross-reference:	Level	RO	SRO
	Tier #		2
	Group #		1
	K/A #	215004 2.2.38	
	Importance Rating		4.5

Knowledge of the conditions and limitations in the facility license (SRM)

Question: SRO #89

Given:

- Refueling is in progress with 550 fuel bundles remaining in the vessel
- The reactor mode switch is locked in REFUEL
- Source Range Monitors (SRMs) A, B, and C are operable
- SRM D is inoperable and bypassed
- Shutdown margin has been verified
- All control rods are at position 00

With the refueling platform unloaded over the vessel, the count rate on SRM B drops to 1.5 cps

Per Tech Specs, core alterations…

A. are permitted in quadrants A and C ONLY.

B. can continue if NO fuel movement occurs.

C. must be formally suspended.

D. can continue with NO restrictions.

Proposed Answer: C

Explanation (Optional):

A: Are permitted in quadrants A and C ONLY, **INCORRECT**, The T/S limits (3.9.2.b) for minimum operable SRMs is NOT met. Requires an SRM in the quadrant being loaded and the adjacent quadrant. With both B and D SRM inoperable, NO operable adjacent SRM exists and core

alterations must be formally suspended,

B: can continue if NO fuel movement occurs, **INCORRECT**, The T/S limits (3.9.2.b) for minimum operable SRMs is NOT met. Requires an SRM in the quadrant being loaded and the adjacent quadrant. With both B and D SRM inoperable, NO operable adjacent SRM exists and core alterations must be formally suspended,

C: must be formally suspended, **CORRECT**, The T/S limits (3.9.2.b) for minimum operable SRMs is NOT met. Requires an SRM in the quadrant being loaded and the adjacent quadrant. With both B and D SRM inoperable, NO operable adjacent SRM exists and core alterations must be formally suspended,

D: can continue with NO restrictions, **INCORRECT**, The T/S limits (3.9.2.b) for minimum operable SRMs is NOT met. Requires an SRM in the quadrant being loaded and the adjacent quadrant. With both B and D SRM inoperable, NO operable adjacent SRM exists and core alterations must be formally suspended,

Technical Reference(s): IO-009, Tech Spec 3.9.2.b (Attach if not previously provided)

Proposed References to be provided to applicants during examination: none

Learning Objective: TECSPCE010, Given specific plant operating conditions and a copy of the Hope Creek Generating Station Technical Specifications, evaluate plant/system operability and determine required actions (if any) to be taken. (As available)

Question Source: Bank #

Modified Bank # 54838 (Note changes or attach parent)

New

Question History: NRC 2009

Question Cognitive Level: Memory or Fundamental Knowledge X

Comprehension or Analysis

10 CFR Part 55 Content: 55.41

55.43 2, 7

Comments:

Facility: Hope Creek

Vendor: GE

Exam Date: 2012

Exam Type: SRO

Examination Outline Cross-reference:	Level	RO	SRO
	Tier #		2
	Group #		1
	K/A #	223002 A2.09	
	Importance Rating		3.7

Ability to (a) predict the impacts of the following on the PRIMARY CONTAINMENT ISOLATION SYSTEM/NUCLEAR STEAM SUPPLY SHUT-OFF ; and (b) based on those predictions, use procedures to correct, control, or mitigate the consequences of those abnormal conditions or operations: System initiation.

Question: SRO #90

Given:

- The plant is in Refuel and preparing to transition to Cold Shutdown.
- OP-IO.ZZ-001 Refueling to Cold Shutdown has just been entered.
- NO actions from OP-IO.ZZ-001 have been performed yet.
- B RHR is in Shutdown Cooling.

Then:

- The BB-PT-N078A Rx Pressure transmitter fails upscale
- OHA C8-A5 NSSSS INBD ISLN SYS OUT OF SVCE alarms
- OHA C8-C5 NSSSS TRIP UNIT TROUBLE alarms

What are the required actions for the failed transmitter and why?

A. Enter AB.RPV-009, for the loss of Shutdown Cooling and place A RHR in Shutdown Cooling.

B. Enter AB.RPV-009, for the loss of Shutdown Cooling and restore B RHR in Shutdown Cooling.

C. Enter AB.CONT-002, due to the containment isolation and restore/reset isolated equipment.

D. Enter AR.ZZ-012, due to the transmitter failure and refer to Tech Spec 3.3.2., Isolation Actuation Instrumentation.

Proposed Answer: D

Explanation (Optional):

A: Enter AB.RPV-009 Shutdown Cooling, for the loss of Shutdown Cooling and place A RHR in Shutdown Cooling. **INCORRECT,** OP-GP.SM-001 is still active when exiting IOP-009, the procedure was performed per IOP-005 step 5.4.44 which is the prerequisite procedure for IOP-009 and RHR valves F008/9/15A-B will NOT isolate.

B: Enter AB.RPV-009 Shutdown Cooling, for the loss of Shutdown Cooling and restore B RHR in Shutdown Cooling. **INCORRECT,** OP-GP.SM-001 is still active when exiting IOP-009, the procedure was performed per IOP-005 step 5.4.44 which is the prerequisite procedure for IOP-009 and RHR valves F008/9/15A-B will NOT isolate.

C: Enter AB.CONT-002 Primary Containment, due to the containment isolation and restore/reset isolated equipment. **INCORRECT,** OP-GP.SM-001 is still active when exiting IOP-009, the procedure was performed per IOP-005 step 5.4.44 which is the prerequisite procedure for IOP-009 and RHR valves F008/9/15A-B will NOT isolate.

D: Enter AR.ZZ-0012 Overhead Alarm Response, due to the transmitter failure and enter Tech Spec 3.3.2., **CORRECT,** OP-GP.SM-001 is still active when exiting IOP-009, the procedure was performed per IOP-005 step 5.4.44 which is the prerequisite procedure for IOP-009 and RHR valves F008/9/15A-B will NOT isolate. Alarm response has direction to enter the applicable Tech Spec for the failed transmitter.

Technical Reference(s): OP-IO.ZZ-001, OP-IO.ZZ-005, OP-IO.ZZ-009 and OP.GP-SM-001, OP.AB-RPV-009 (Attach if not previously provided)

Proposed References to be provided to applicants during examination: OP-IO.ZZ-001 sect 5.2 ONLY

Learning Objective: NSSSS0E004, Given a list of NSSSS isolation signals, explain the plant conditions and/or operator actions necessary for automatic and/or manual bypass of the isolation signal. (As available)

Question Source: Bank #

Modified Bank # (Note changes or attach parent)

New X

Question History:

Question Cognitive Level: Memory or Fundamental Knowledge

Comprehension or Analysis X

10 CFR Part 55 Content: 55.41

55.43 2,5

Comments:

Facility: Hope Creek

Vendor: GE

Exam Date: 2012

Exam Type: SRO

Examination Outline Cross-reference:	Level	RO	SRO
	Tier #		2
	Group #		2
	K/A #	259001 A2.03	
	Importance Rating		3.6

Ability to (a) predict the impacts of the following on the REACTOR FEEDWATER SYSTEM ; and (b) based on those predictions, use procedures to correct, control, or mitigate the consequences of those abnormal conditions or operations: Loss of condensate pump(s)

Question: SRO #91

Given:

- The reactor is operating at 3400 MWt
- A RFPT is C/T due to pump coupling replacement
- B and C RFPT are feeding the RPV in 3 element control
- All primary condensate pumps are running
- All secondary condensate pumps are running
- OPRMs are INOP
- Feedwater flow ≈ 89%
- Core Flow is ≈ 90%

Then

- The C Secondary Condensate pump trips
- B and C RFPT remain in AUTO
- Intermittent APRM upscale alarms are received
- Core flow is now 48%

What are the required actions for present plant conditions?

A. IAW AB.RPV-004 Reactor Level Control, direct the Reactor Operator to take manual control of feedwater.

B. IAW EOP-101 RPV Control, direct the Reactor Operator to LOCK the mode in SHUTDOWN.

C. IAW RPV-001, Reactor Power, direct the Reactor Operator to insert control rods.

D. IAW RPV-003, Recirculation System/Power Oscillations, direct the Reactor Operator to LOCK the mode switch in SHUTDOWN.

Proposed Answer: C

Explanation (Optional):

A: IAW AB.RPV-004 Reactor Level Control, order the Reactor Operator to take manual control of feedwater and control reactor water level between level 4 and level 7. **INCORRECT**, with feedwater flow > 75% a trip of a Secondary Condensate pump will cause an intermediate runback (45%) of the reactor recirculation pumps. While the operators may take manual control of feedwater, because the failure listed in the stem is not a failure of automatic feed water control, there is no requirement to take manual control.

B: IAW EOP-101 RPV Control, order the Reactor Operator to LOCK the mode in SHUTDOWN when reactor water level drops ≤ 12.5". **INCORRECT,** reactor water level should not reach 12.5" as an intermediate runback on reactor recirculation is initiated by the C Secondary Condensate pump tripping with feed water flow >75%. NO requirement to scram the reactor on low level.

C: IAW RPV-001, Reactor Power, when APRM Upscale alarms are received, order the Reactor Operator to insert control rods to clear the upscale alarms. **CORRECT,** with feedwater flow >75% a trip of a Secondary Condensate pump will cause an intermediate runback (45%) of the reactor recirculation pumps. If APRM upscale alarms come in, per RPV-001, the requirement is to insert control rods to clear the upscale alarms.

D: IAW RPV-003, Recirculation System/Power Oscillations, order the Reactor Operator to LOCK the mode switch in SHUTDOWN, for entering region 1 of the power to flow map. **INCORRECT,** with feedwater flow > 75% a trip of a Secondary Condensate pump will cause an intermediate runback (45%) of the reactor recirculation pumps. Power is expected to drop to ≈60-65% and

would not enter into region 1 of the power to flow map. No requirement to lock the mode switch in shutdown.

Technical Reference(s): AB.RPV-001, AB.RPV-003, AB.RPV-004 and EOP-101 (Attach if not previously provided)

Proposed References to be provided to applicants during examination: none

Learning Objective: FEED00E026, From memory, given plant conditions, summarize/identify the three (3) possible RFPT runback signals. IAW available Control Room References. (As available)

Question Source: Bank #

Modified Bank # (Note changes or attach parent)

New X

Question History:

Question Cognitive Level: Memory or Fundamental Knowledge

Comprehension or Analysis X

10 CFR Part 55 Content: 55.41

55.43 5

Comments:

Facility: Hope Creek

Vendor: GE

Exam Date: 2012

Exam Type: SRO

Examination Outline Cross-reference:	Level	RO	SRO
	Tier #		2
	Group #		2
	K/A #	226001 2.2.42	
	Importance Rating		4.6

Equipment Control: Ability to recognize system parameters that are entry-level conditions for Technical Specifications. (RHR/LPCI: CTMT Spray Mode)

Question: SRO #92

Given:

- The plant is operating at 100% power.
- OP-IS.BC-0101 RESIDUAL HEAT REMOVAL SUBSYSTEM A VALVES - INSERVICE TEST surveillance is being performed.
- While stroke timing the BC-HV-F048A RHR Heat Exchanger Bypass, the valve is stroked full open and CAN NOT be reclosed.
- A local investigation and attempt to stroke the valve reveals the valve is mechanically bound in place and will NOT move.

Which one of the following Technical Specification actions is applicable as a result of this condition?

A. Declare the LPCI mode of A RHR INOP AND provided that at least one CORE SPRAY subsystem is OPERABLE, restore the inoperable LPCI subsystem to OPERABLE status within 30 days or be in at least HOT SHUTDOWN within the next 12 hours and in COLD SHUTDOWN within the following 24 hours.

B. Declare ONLY the Suppression Pool Cooling mode of A RHR INOP AND restore the inoperable loop to OPERABLE status within 72 hours or be in at least HOT SHUTDOWN within the next 12 hours and in COLD SHUTDOWN within the following 24 hours.

C. Declare ONLY the Suppression Pool Spray mode of A RHR INOP AND restore the inoperable loop to OPERABLE status within 7 days or be in at least HOT SHUTDOWN within the next 12 hours and in COLD SHUTDOWN within the following 24 hours.

D. Declare BOTH the Suppression Pool Cooling and Spray modes of A RHR INOP AND restore the inoperable loop of Suppression Pool Cooling to OPERABLE status within 72 hours AND Suppression Pool Spray within 7 days OR be in at least HOT SHUTDOWN within the next 12 hours and in COLD SHUTDOWN within the following 24 hours.

Proposed Answer: D

Explanation (Optional):

A: Declare the LPCI mode of A RHR INOP AND provided that at least one CORE SPRAY subsystem is OPERABLE, restore the inoperable LPCI subsystem to OPERABLE status within 30 days or be in at least HOT SHUTDOWN within the next 12 hours and in COLD SHUTDOWN within the following 24 hours. **INCORRECT**, With the heat exchanger valve failed open LPCI is not INOP. Valve gets an open signal on an initiation signal for LPCI.

B: Declare ONLY the Suppression Pool Cooling mode of A RHR INOP AND restore the inoperable loop to OPERABLE status within 72 hours or be in at least HOT SHUTDOWN within the next 12 hours and in COLD SHUTDOWN within the following 24 hours. **INCORRECT**, With the heat exchanger valve failed open Suppression Pool Cooling AND Spray are both INOP. See T/S 3.6.2.2 and 3.6.2.3. For operability, flow through the heat exchanger (bypass closed) is required.

C: Declare ONLY the Suppression Pool Spray mode of A RHR INOP AND restore the inoperable loop to OPERABLE status within 7 days or be in at least HOT SHUTDOWN within the next 12 hours and in COLD SHUTDOWN within the following 24 hours. **INCORRECT**, With the heat exchanger valve failed open Suppression Pool Cooling AND Spray are both INOP. See T/S 3.6.2.2 and 3.6.2.3. For operability, flow through the heat exchanger (bypass closed) is required.

D: Declare BOTH the Suppression Pool Cooling and Spray modes of A RHR INOP AND restore the inoperable loop of Suppression Pool Cooling to OPERABLE status within 72 hours AND Suppression Pool Spray with 7 days OR be in at least HOT SHUTDOWN within the next 12 hours and in COLD SHUTDOWN within the following 24 hours. **CORRECT**, With the heat exchanger valve failed open Suppression Pool Cooling AND Spray are both INOP. See T/S 3.6.2.2 and 3.6.2.3. For operability, flow through the heat exchanger (bypass closed) is required.

Technical Reference(s): Tech Specs 3.5.1, 3.6.2.2 and 3.6.2.3 (Attach if not previously provided)

Proposed References to be provided to applicants during examination: Tech Spec sections 3.5.1-3.5.2 only, 3.6.2.2 – 3.6.4.2 only, see Q#69 & #93

Learning Objective: RHRSYSE013, Given Plant Conditions and access to Technical Specifications: Select those sections which are applicable to the Residual Heat Removal System IAW HCGS Technical Specifications. Evaluate Residual Heat Removal System operability and determine required actions based upon system operability IAW HCGS Technical Specifications. (SRO Only) Explain the bases for those Technical Specifications associated with the Residual Heat Removal System IAW HCGS Technical Specifications. (SRO Only) (As available)

Question Source: Bank #

Modified Bank # (Note changes or attach parent)

New X

Question History:

Question Cognitive Level: Memory or Fundamental Knowledge

Comprehension or Analysis X

10 CFR Part 55 Content: 55.41

55.43 2

Comments:

Facility: Hope Creek

Vendor: GE

Exam Date: 2012

Exam Type: SRO

Examination Outline Cross-reference:	Level	RO	SRO
	Tier #		2
	Group #		2
	K/A #	223001	2.2.37
	Importance Rating		4.6

Equipment Control: Ability to determine operability and / or availability of safety related equipment. (Primary Containment System and Auxiliaries)

Question: SRO #93

While investigating the source of excessive N^2 makeup to the Drywell,

- Operators discover that Drywell Purge Isolation Valve GS-HV-4952 was wired wrong during the last refuel outage.
- The GS-HV-4952 has been open since startup 35 days ago.

In addition,

- Maintenance reports that Drywell Purge Exhaust valve GS-HV-4950 limit switches were set incorrectly and the valve is partially open.

Maintenance has closed both valves and restored them to operable status in 3 hours.

What impact will this have on plant operation?

A. The Drywell can NOT be de-inerted until Op Cond 4.

B. The Drywell can ONLY be de-inerted in Op Cond 2 or 3.

C. The Isolation Valve GS-HV-4952 can ONLY be used for purging.

D. The Exhaust Valve GS-HV-4950 can now be used for pressure control.

Proposed Answer: A

Explanation (Optional):

A: The Drywell cannot be de-inerted until Op Cond 4, **CORRECT**, T/S 3.6.1.8 limit open time on the DW purge valves to 500 hours per 365 days. The time allowed has expired 35 days x 24

hours/day = 840 hours. Therefore, valve opening is not allowed in Op Cond 1, 2 or 3 unless for the purpose of pressure control thru the 2 inch bypass valve.

B: The Drywell can only be de-inerted in Op Cond 2 or 3, **INCORRECT,** T/S 3.6.1.8 limit open time on the DW purge valves to 500 hours per 365 days. The time allowed has expired 35 days x 24 hours/day = 840 hours. Therefore, valve opening is not allowed in Op Cond 1, 2,or 3 unless for the purpose of pressure control thru the 2 inch bypass valve.

C: The Isolation Valve GS-HV-4952 can only be used for purging, **INCORRECT,** T/S 3.6.1.8 limit open time on the DW purge valves to 500 hours per 365 days. The time allowed has expired 35 days x 24 hours/day = 840 hours. Therefore, valve opening is not allowed in Op Cond 1, 2,or 3 unless for the purpose of pressure control thru the 2 inch bypass valve, purging in NOT allowed in the present condition.

D: The Bypass Valve GS-HV-4950 can now be used for pressure control, **INCORRECT,** T/S 3.6.1.8 limit open time on the DW purge valves to 500 hours per 365 days. The time allowed has expired 35 days x 24 hours/day = 840 hours. Therefore, valve opening is not allowed in Op Cond 1, 2,or 3 unless for the purpose of pressure control thru the 2 inch bypass valve, purging in NOT allowed in the present condition. Pressure control is permitted " Valves open for pressure control are not subject to the 500 hours per 365 day limit, provided the 2 inch bypass lines are being utilized" the GS-HV-4950 is NOT the 2 inch bypass line.

Technical Reference(s): M-57-1 sheet 1, Tech Spec 3.6.1.8 (Attach if not previously provided)

Proposed References to be provided to applicants during examination: T/S 3.6.1.8

Learning Objective: INERT0E015, Given a scenario of applicable operating conditions and access to Technical Specifications: a. Select those sections which are applicable to the Containment Inerting and Purge System. b. Evaluate Containment Inerting and Purge System operability and determine required actions based upon system inoperability. (SRO Only) c. Explain the bases for those Technical Specification sections associated with the Containment Inerting a Purge System. (As available)

Question Source: Bank # 56386

Modified Bank # (Note changes or attach parent)

New

Question History:

Question Cognitive Level: Memory or Fundamental Knowledge

Comprehension or Analysis X

10 CFR Part 55 Content: 55.41

55.43 2

Comments:

Facility: Hope Creek

Vendor: GE

Exam Date: 2012

Exam Type: SRO

Examination Outline Cross-reference:	Level	RO	SRO
	Tier #		3
	Group #		
	K/A #		2.1.43
	Importance Rating		4.3

Ability to use procedures to determine the effects on reactivity of plant changes, such as RCS temperature, secondary plant, fuel depletion, etc.

Question: SRO #94

Given:

- The turbine had been operating for 183 days when it was inadvertently tripped by an I/C surveillance.
- The reactor has been scrammed for 5 hours.
- All other plant equipment responded as required.
- No start-up restraints exist and a quick turn around has been approved IAW OP-AA-108-114 Post Transient Review.
- You are the Reactivity Management SRO (RMSRO) for the restart.
- The Reactor Operator, who performed the previous cold startup, reports to you that control rods 26-27, 26-35, 34-27 and 34-35 are less reactive than expected and has stopped the startup awaiting your decision.

As the Reactivity Management SRO (RMSRO),
you should direct the startup be (1), because (2)

A. (1) continued
(2) the center of the core is less reactive due to the buildup of xenon.

B. (1) suspended
(2) the center of the core is more reactive due to the depletion of xenon.

C. (1) continued
(2) the center of the core is less reactive due to the depletion of xenon.

D. (1) suspended
(2) the center of the core is more reactive due to starting up at a higher temperature.

Proposed Answer: A

Explanation (Optional):

A: continued. The center of the core is less reactive due to the buildup of xenon. **CORRECT**, Since the production of xenon-135 and its precursor, iodine-135, is dependent on the thermal neutron flux, the production at any local point in the reactor core depends on the thermal neutron flux at that core location. Since the neutron flux is not uniform over the core volume, the production and removal rates, and the isotopic concentrations, xenon-135 and iodine-135 are also not uniform over the core volume. Thus, xenon-135 has a local reactivity effect, which tends to change the thermal neutron flux shape. Where local xenon concentration is relatively high, the flux is depressed, and where local xenon concentration is relatively low, flux tends to be greater. These effects are due to the poisoning effect of Xe-135 on the neutron life cycle. As normal flux distribution tends to be highest at the center and bottom or the core, Xe concentration will also be highest there following a shutdown.

B: suspended. The center of the core is more reactive due to the depletion of xenon. **INCORRECT**, Since the production of xenon-135 and its precursor, iodine-135, is dependent on the thermal neutron flux, the production at any local point in the reactor core depends on the thermal neutron flux at that core location. Since the neutron flux is not uniform over the core volume, the production and removal rates, and the isotopic concentrations, xenon-135 and iodine-135 are also not uniform over the core volume. Thus, xenon-135 has a local reactivity effect, which tends to change the thermal neutron flux shape. Where local xenon concentration is relatively high, the flux is depressed, and where local xenon concentration is relatively low, flux tends to be greater. These effects are due to the poisoning effect of Xe-135 on the neutron life cycle. As normal flux distribution tends to be highest at the center and bottom or the core, Xe concentration will also be highest there following a shutdown.

C: continued. The center of the core is less reactive due to depletion of xenon. **INCORRECT,** Since the production of xenon-135 and its precursor, iodine-135, is dependent on the thermal neutron flux, the production at any local point in the reactor core depends on the thermal neutron flux at that core location. Since the neutron flux is not uniform over the core volume, the production and removal rates, and the isotopic concentrations, xenon-135 and iodine-135 are also not uniform over the core volume. Thus, xenon-135 has a local reactivity effect, which tends to change the thermal neutron flux shape. Where local xenon concentration is relatively high, the flux is depressed, and where local xenon concentration is relatively low, flux tends to be greater. These effects are due to the poisoning effect of Xe-135 on the neutron life cycle. As normal flux distribution tends to be highest at the center and bottom or the core, Xe concentration will also be highest there following a shutdown. Moderator temperature s an overall effect on the core not localized such as xenon.

D: suspended. The center of the core is more reactive due to starting up at a higher temperature. **INCORRECT,** Since the production of xenon-135 and its precursor, iodine-135, is dependent on the thermal neutron flux, the production at any local point in the reactor core depends on the thermal neutron flux at that core location. Since the neutron flux is not uniform over the core volume, the production and removal rates, and the isotopic concentrations, xenon-135 and iodine-135 are also not uniform over the core volume. Thus, xenon-135 has a local reactivity effect, which tends to change the thermal neutron flux shape. Where local xenon concentration is relatively high, the flux is depressed, and where local xenon concentration is relatively low, flux tends to be greater. These effects are due to the poisoning effect of Xe-135 on the neutron life cycle. As normal flux distribution tends to be highest at the center and bottom or the core, Xe concentration will also be highest there following a shutdown. Moderator temperature s an overall effect on the core not localized such as xenon.

Technical Reference(s): OP-AB-300-1003 (Attach if not previously provided)

Proposed References to be provided to applicants during examination: none

Learning Objective: NOH01OPSSTDE001, Following classroom/simulator training, and provided access to the Operations Standards, the student will determine actions needed to meet standards in the following areas: Reactivity Management, Industrial Safety Practices, Radiation Worker Practices Self-Assessment/ Corrective Action, Housekeeping/Cleanliness Control/Fme Briefs, Accessing Equipment Radiological Contamination Of Clean Systems, Post Accident Use Of Valve And Breaker Overrides, Electromagnetic Interference (Emi) & Radio Frequency Interference (Rfi), Operator Appearance (As available)

Question Source: Bank #

Modified Bank # 111245 (Note changes or attach parent)

New

Question History:

Question Cognitive Level: Memory or Fundamental Knowledge X

Comprehension or Analysis

10 CFR Part 55 Content: 55.41

55.43 6

Comments:

Facility: Hope Creek

Vendor: GE

Exam Date: 2012

Exam Type: SRO

Examination Outline Cross-reference:	Level	RO	SRO
	Tier #		3
	Group #		
	K/A #	2.2.17	
	Importance Rating		3.8

Knowledge of the process for managing maintenance activities during power operations, such as risk assessments, work prioritization, coordination with the transmission system operator.

Question: SRO #95

The plant is operating at 100% power.

When:

The Electric System Operator (ESO) contacts the Operations Shift Manager (SM) and has informed him that T & D (Transmission and Distribution) work has found a substantial SF_6 gas leak on 500KV breaker, BS 2-6. The 500KV switchyard is in normal alignment. A notification from the Maintenance Department has been generated to address the leaking breaker.

In accordance with LS-AA-120, Issue Identification and Screening, which of the following are responsibilities of the Operations Shift Management Reviewer concerning the notification written by the Maintenance Department?

A. Determine if there are any operability concerns AND ensure the area is quarantined.

B. Quarantine the area AND ensure Licensing has initiated required NRC reports.

C. Determine reportability requirements AND perform a Quick Human Performance Investigation.

D. Initiate required field work AND ensure all responsible personnel are documented by name in the notification.

Proposed Answer: A

Explanation (Optional):

A: Determine if there are any operability concerns and ensure areas, materials and procedures are quarantined. **CORRECT**, LS-AA-120, sect 3.10, "Operations Shift Management Reviewer:

Ensure immediate actions are taken including: Quarantine areas, equipment, or records to preserve physical evidence, Initiate a Prompt Investigation per OP-AA-106-101-1001, Event Response Guidelines, Initiate required field work, Determine operability and reportability."

B: Quarantine areas, materials and procedures and ensure licensing has initiated required NRC reports. **INCORRECT**, Operations is required to initiate reportability.

C: Determine reportability requirements and Quick Human Performance Investigation has been initiated. **INCORRECT,** Operations is required ensure a prompt investigation has been initiated, NOT perform a QHPI.

D: Initiate required field work and ensure all responsible personnel are documented by name in the notification. **INCORRECT,** Supervisor is required to ensure personnel responsibilities are documented but names are not used. Per LS-AA-120 sect 3.9, "Document issues with individual personnel performance with statements such as "performance management should be implemented by the appropriate manager/supervisor". Specific information, such as individual names, disciplinary actions take, etc., should not be included in notifications."

Technical Reference(s): LS-AA-120 (Attach if not previously provided)

Proposed References to be provided to applicants during examination: none

Learning Objective: NOH04ADA120E003, From memory describe the actions for Operations Shift Management Review of a issue to determine the following: a. If operability is required, b. Determine Operability c. Reportability requirements IAW LS-AA-120. (As available)

Question Source: Bank #

Modified Bank # (Note changes or attach parent)

New X

Question History:

Question Cognitive Level: Memory or Fundamental Knowledge X

Comprehension or Analysis

10 CFR Part 55 Content: 55.41

55.43 1

Comments:

Facility: Hope Creek

Vendor: GE

Exam Date: 2012

Exam Type: SRO

Examination Outline Cross-reference:	Level	RO	SRO
	Tier #		3
	Group #		
	K/A #	2.3.14	
	Importance Rating		3.8

Knowledge of radiation or containment hazards that may arise during normal, abnormal, or emergency conditions or activities.

Question: SRO #96

Following a large LOCA with drywell pressure 36 psig and rising…

(1) which containment vent path would result in an unscrubbed, unmonitored and untreated radioactive release to the environment

AND

(2) what EOP gives this direction?

A. (1) Via the drywell supply and ILRT piping.
(2) EOP-101, RPV Control.

B. (1) Via the suppression chamber supply and ILRT piping.
(2) EOP-101, RPV Control.

C. (1) Via the drywell supply and ILRT piping.
(2) EOP-102, Primary Containment Control.

D. (1) Via the suppression chamber supply and ILRT piping.
(2) EOP-102, Primary Containment Control.

Proposed Answer: C

Explanation (Optional):

A: IAW EOP-101, RPV Control, vent the containment via the drywell supply and ILRT piping. **INCORRECT**, EOP-101 does have an entry condition for high drywell pressure, however there is no guidance for containment venting contained in the flowchart. IAW HC.OP-EO.ZZ-0318 step 5.1.3, Caution: "Section 5.1.3 provides a hard-piped vent path that does not communicate with blowout panels or back draft dampers. However, the use of this vent path will result in an unmonitored, unscrubbed and untreated radioactive release to the environment and requires local operations to be performed under potentially adverse radiological and/or environmental conditions."

B: IAW EOP-101, RPV Control, vent the containment via the suppression chamber supply and ILRT piping. **INCORRECT**, EOP-101 does have an entry condition for high drywell pressure, however there is no guidance for containment venting contained in the flowchart. IAW HC.OP-EO.ZZ-0318 step 5.1.2, "Section 5.1.2 provides a hard-piped vent path that does not communicate with blowout panels or back draft dampers and is scrubbed by the Suppression Pool. However, the use of this vent path will result in an unmonitored release to the environment and requires local operations to be performed under potentially adverse radiological and/or environmental conditions."

C: IAW EOP-102, Primary Containment Control, vent the containment via the drywell supply and ILRT piping. **CORRECT**, Per EOP-102 step(s) DW/P-17 and DW/P-20, when drywell pressure can not be maintained below 65 psig vent containment per OP-EO.ZZ-0318, step 5.1.3, Caution: "Section 5.1.3 provides a hard-piped vent path that does not communicate with blowout panels or back draft dampers. However, the use of this vent path will result in an unmonitored, unscrubbed and untreated radioactive release to the environment and requires local operations to be performed under potentially adverse radiological and/or environmental conditions."

D: IAW EOP-102, Primary Containment Control, vent the containment via the suppression chamber supply and ILRT piping. **INCORRECT**, Per EOP-102 step(s) DW/P-17 and DW/P-20, when drywell pressure can not be maintained below 65 psig vent containment per OP-EO.ZZ-0318, step 5.1.2, "Section 5.1.2 provides a hard-piped vent path that does not communicate with blowout panels or back draft dampers and is scrubbed by the Suppression Pool. However, the use of this vent path will result in an unmonitored release to the environment and requires local operations to be performed under potentially adverse radiological and/or environmental conditions."

Technical Reference(s): EOP-102, EOP-318 (Attach if not previously provided)

Proposed References to be provided to applicants during examination: none

Learning Objective: EOP300E004, From memory, describe any/all flow paths established by the performance of each of the 300 series Emergency Operating procedures. (As available)

Question Source: Bank #

Modified Bank # (Note changes or attach parent)

New X

Question History:

Question Cognitive Level:	Memory or Fundamental Knowledge	X
	Comprehension or Analysis	
10 CFR Part 55 Content:	55.41	
	55.43	4, 5

Comments:

Facility: Hope Creek

Vendor: GE

Exam Date: 2012

Exam Type: SRO

Examination Outline Cross-reference:	Level	RO	SRO
	Tier #		3
	Group #		
	K/A #	2.4.34	
	Importance Rating		4.1

Knowledge of RO tasks performed outside the main control room during an emergency and the resultant operational effects.

Question: SRO #97

Due to a fire in the Control Room console (10C651C), you ordered the Control Room evacuated immediately.

The reactor was scrammed remotely from the RPS distribution panels.

How is the scram verified?

A. IAW OP-SO.SA-001, Redundant Reactivity Control, verify ARI valves are open on the 10C601 and 10C602 Panels.

B. IAW OP-SO.SB-001, Reactor Protection, verify with SPDS/CRIDS display terminal in the TSC.

C. IAW OP-SO.BF-001, CRD Hydraulic, verify RPS Backup Scram Air Solenoids are de-energized.

D. IAW OP-SO.BF-002, Individual CRD Operation, verify HCU accumulator pressure is 950 - 1000 psig at each HCU.

Proposed Answer: B

Explanation (Optional):

A: IAW OP-SO.SA-001, Redundant Reactivity Control, verify ARI valves are open on the 10C601 and 10C602 Panels. **INCORRECT,** The RO would not normally go to the 10C601/602. The status of the ARI valves is displayed on the 10C601 and 10C602 panels, however actual rod positions are not available here

B: IAW OP-SO.SB-001, Reactor Protection, verify with SPDS/CRIDS display terminal in the TSC. **CORRECT,** 5.2.2 ENSURE that all 185 Control Rods have fully inserted by one (OR more) of the following: SELECT CONTROL ROD POSITIONS on CRIDS AND OBSERVE Rod positions. SPDS ALL RODS INSERTED reads "YES". The TSC is physically "next" to the RSP and is used for indications displayed on either SPDS/CRIDS

C: IAW OP-SO.BF-001, CRD Hydraulic, verify RPS Backup Scram Air Solenoids are de-energized. **INCORRECT,** Back-up scram valves are energized to function and only an indication that the scram air header was depressurized and not an indication of control rod position.

D: IAW OP-SO.BF-002, Individual CRD Operation, verify HCU accumulator pressure is 950 - 1000 psig at each HCU. **INCORRECT,** while lowered HCU accumulator pressure would be an indication of the control rod being scrammed does not indicate control rod final position.

Technical Reference(s): OP-IO.ZZ-008, OP-SO.SA-001, (Attach if not previously provided)

OP-SO.SB-001, OP-SO.BF-001

OP-SO.BF-002

Proposed References to be provided to applicants during examination: none

Learning Objective: IOP008E002, Determine if all Prerequisites have been met prior to implementation of the SHUTDOWN FROM OUTSIDE THE CONTROL ROOM Integrated Operating Procedure. (As available)

Question Source: Bank #

Modified Bank # (Note changes or attach parent)

New X

Question History:

Question Cognitive Level: Memory or Fundamental Knowledge X

Comprehension or Analysis

10 CFR Part 55 Content: 55.41

55.43 5

Comments:

Facility: Hope Creek

Vendor: GE

Exam Date: 2012

Exam Type: SRO

Examination Outline Cross-reference:	Level	RO	SRO
	Tier #		3
	Group #		
	K/A #	2.1.35	
	Importance Rating		3.9

Knowledge of the fuel-handling responsibilities of SRO's.

Question: SRO #98

Plant conditions:

- A Spiral Fuel offload is in progress per HC.RE-FR.ZZ-0001.
- 12 Control Rod blades and a drive mechanism have been removed.
- While a fuel bundle is being moved, a problem with the refuel bridge occurs and the fuel bundle must immediately be lowered back into the core.

Then:

The Refueling SRO reports that the fuel bundle was mistakenly placed into a fuel cell with a removed control rod blade.

The Refuel Bridge has been relocated over the Fuel Pool and declared INOPERABLE

Per Tech Specs and OP-SO.KE-001, what actions are required by the Refueling SRO?

A. Stop fuel handling in the fuel pool and reinstall a Control Rod Blade in the now fueled cell.

B. Stop fuel handling in the fuel pool and reinstall a Control Rod Mechanism in the now fueled cell.

C. Stop Control Rod Blade removal from the reactor vessel. All fuel handling must stop. Once the refuel bridge is operable the misplaced fuel bundle must be removed and placed into its correct storage location.

D. Stop Control Rod Blade removal from the reactor vessel. Fuel handling in the fuel pool may continue. Once the refuel bridge is operable the misplaced fuel bundle must be removed and placed into its correct storage location.

Proposed Answer: C

Explanation (Optional):

A: Stop fuel handling in the fuel pool and reinstall a Control Rod Blade in the now fueled cell. **INCORRECT**, It is physically impossible to reinstall a control rod in a fuel cell with a fuel bundle in place. The fuel bundle must be removed prior to reinstalling the control rod. With the refuel bridge INOP, no fuel can be moved.

B: Stop fuel handling in the fuel pool and reinstall a Control Rod Mechanism in the now fueled cell. **INCORRECT,** The control rod mechanism can be reinstalled, however for the Tech Spec 3.9.10.2 to be satisfied, the control rod associated with the mechanism must be relatched and with a fuel bundle into the cell a control rod can not be reinstalled. With the refuel bridge INOP, no fuel can be moved.

C: Stop Control Rod Blade removal from the reactor vessel. All fuel loading must stop. The misplaced fuel bundle must be removed and placed into its correct storage location immediately upon the refuel bridge being operable. **CORRECT,** With the refuel bridge INOP, no fuel can be moved. Per SO.KE-001, step 2.2.3 and 2.3.3 - FSAR 9.1.4.2.12.3 As soon as the refuel bridge has been repaired and declared operable, the misplaced fuel bundle must be removed and placed into its proper storage location.

D: Stop Control Rod Blade removal from the reactor vessel. Fuel handling in the fuel pool may continue. The misplaced fuel bundle must be removed and placed into its correct storage location immediately upon the refuel bridge being operable. **INCORRECT,** With the refuel bridge INOP, no fuel can be moved. Per SO.KE-001, step 2.2.3 and 2.3.3 - FSAR 9.1.4.2.12.3 As soon as the refuel bridge has been repaired and declared operable, the misplaced fuel bundle must be removed and placed into its proper storage location.

Technical Reference(s): Tech Spec 3.9.10.1, 3.9.10.2 (Attach if not previously provided)

OP-SO.KE-001, FSAR 9.1.4.2.12.3

Proposed References to be provided to applicants during examination: Tech Spec 3.9.10.1 and 3.9.10.2 only

Learning Objective: IOP009E006, Analyze plant conditions and parameters to determine if plant operation is in accordance with the REFUELING OPERATIONS Integrated Operating Procedure, supporting System Operating Procedures and Technical Specifications (As available)

Question Source: Bank #

Modified Bank # (Note changes or attach parent)

New X

Question History:

Question Cognitive Level: Memory or Fundamental Knowledge

	Comprehension or Analysis		X
10 CFR Part 55 Content:	55.41		
	55.43	2, 6, 7	

Comments:

Facility: Hope Creek

Vendor: GE

Exam Date: 2012

Exam Type: SRO

Examination Outline Cross-reference:	Level	RO	SRO
	Tier #		3
	Group #		
	K/A #	2.4.38	
	Importance Rating		4.4

Ability to take actions called for in the facility emergency plan, including supporting or acting as emergency coordinator if required.

Question: SRO #99

Given:

- A Site Area Emergency was just declared 20 minutes ago due to a leak.
- The leak is discharging to the environment and can NOT be isolated from the Control Room.
- The TSC and EOF are being staffed and are NOT activated at this time.
- The Radiological Assessment Coordinator (RAC) is on station in the TSC.
- The OSC has a plan to manually isolate the leak to terminate the release.
- An Emergency Dose Authorization is required to isolate the line.
- The Emergency Duty Officer (EDO) is NOT in the TSC, and can NOT be reached.

Per NC.EP-EP.ZZ-0304 OSC Radiation Protection Response, the ____(1)____ can authorize the dose extension exposure up to _____(2)_____?

A. (1) RAC
(2) 25 REM

B. (1) RAC
(2) 75 REM

C. (1) Shift Manager
(2) 25 REM

D. (1) Shift Manager
(2) 75 REM

Proposed Answer: C

Explanation (Optional):

A: The RAC can authorize the dose extension exposure up to 25 REM. **INCORRECT**, EP-EP.ZZ-0304 states that the shift manager has the responsibility to authorize emergency exposes until the EDO assumes his or her responsibilities. The planned emergency exposure limit is 25 REM for accident mitigation and isolating the line in this case is an accident mitigating action.

B: The RAC can authorize the dose extension exposure up to 75 REM. **INCORRECT**, EP-EP.ZZ-0304 states that the shift manager has the responsibility to authorize emergency exposes until the EDO assumes his or her responsibilities. The planned emergency exposure limit is 25 REM for accident mitigation and isolating the line in this case is an accident mitigating action.

C: The Shift Manager can authorize the dose extension exposure up to 25 REM. **CORRECT**, EP-EP.ZZ-0304 states that the shift manager has the responsibility to authorize emergency exposures until the EDO assumes his or her responsibilities. The planned emergency exposure limit is 25 REM for accident mitigation and isolating the line in this case is an accident mitigating action.

D: The Shift Manager can authorize the dose extension exposure up to 75 REM. **INCORRECT**, EP-EP.ZZ-0304 states that the shift manager has the responsibility to authorize emergency exposures until the EDO assumes his or her responsibilities. The planned emergency exposure limit is 25 REM for accident mitigation and isolating the line in this case is an accident mitigating action.

Technical Reference(s): EP-EP.ZZ-0304 (Attach if not previously provided)

Proposed References to be provided to applicants during examination: none

Learning Objective: SOB200, ECG/E-Plan/Fire & Medical Questions (As available)

Question Source: Bank #

Modified Bank # 84355 (Note changes or attach parent)

New

Question History: NRC 2007

Question Cognitive Level: Memory or Fundamental Knowledge X

Comprehension or Analysis

10 CFR Part 55 Content: 55.41

55.43 4, 5

Comments:

Facility: Hope Creek

Vendor: GE

Exam Date: 2012

Exam Type: SRO

Examination Outline Cross-reference:	Level	RO	SRO
	Tier #		3
	Group #		
	K/A #	2.3.15	
	Importance Rating		3.1

Knowledge of radiation monitoring systems, such as fixed radiation monitors and alarms, portable survey instruments, personnel monitoring equipment, etc.

Question: SRO #100

Given:

- A plant startup is in progress.
- The 'A' RPS MG Set Voltage Regulator fails causing generator output voltage to drop to approximately 100VAC.
- All other plant equipment functioned as expected.

What's the status of Main Steam Line (MSL) Radiation Monitors?

A. MSL Radiation Monitors RE-N006A and RE-N006C are INOPERABLE.

B. MSL Radiation Monitors RE-N006A and RE-N006B are INOPERABLE.

C. MSL Radiation Monitors RE-N006A and RE-N006C are OPERABLE but degraded.

D. MSL Radiation Monitors RE-N006A and RE-N006B are OPERABLE but degraded.

Proposed Answer: A

Explanation (Optional):

A: MSL Radiation Monitors RE-N006A and RE-N006C are INOPERABLE. **CORRECT**, Main steam line radiation monitor drawers are power from RPS, with A and C rad monitors powered from the A side of RPS and B and D powered from B side of RPS. Loss of power to the radiation monitor causes an INOP trip of the drawer, this is due to the EPA breaker(s) having an under-voltage trip set at < 108 volts AC per T/S 3.8.4.4

B: MSL Radiation Monitors RE-N006A and RE-N006B are INOPERABLE. **INCORRECT**, Main steam line radiation monitor drawers are power from RPS, with A and C rad monitors powered

from the A side of RPS and B and D powered from B side of RPS. Loss of power to the radiation monitor causes an INOP trip of the drawer, this is due to the EPA breaker(s) having an under-voltage trip set at < 108 volts AC per T/S 3.8.4.4

C: MSL Radiation Monitors RE-N006A and RE-N006C are OPERABLE but degraded.
INCORRECT, Main steam line radiation monitor drawers are power from RPS, with A and C rad monitors powered from the A side of RPS and B and D powered from B side of RPS. Loss of power to the radiation monitor causes an INOP trip of the drawer, this is due to the EPA breaker(s) having an under-voltage trip set at < 108 volts AC per T/S 3.8.4.4

D: MSL Radiation Monitors RE-N006A and RE-N006B are OPERABLE but degraded.
INCORRECT, Main steam line radiation monitor drawers are power from RPS, with A and C rad monitors powered from the A side of RPS and B and D powered from B side of RPS. Loss of power to the radiation monitor causes an INOP trip of the drawer, this is due to the EPA breaker(s) having an under-voltage trip set at < 108 volts AC per T/S 3.8.4.4

Technical Reference(s): Tech Spec 3.8.4.4 , 3.3.1 (Attach if not previously provided)

Proposed References to be provided to applicants during examination: none

Learning Objective: RMSYS0E002, Regarding the main steam line Radiation Monitoring System: From memory, explain the setpoints / conditions associated with a high-high radiation or inoperative trip IAW the Radiation Monitoring System Lesson Plan. Given normal Control Room references, determine the automatic plant actuations / trips which occur as a result of a high-high radiation or inoperative trip. From memory, evaluate the effect of a loss of RPS power IAW the Radiation Monitoring System Lesson Plan. (As available)

Question Source: Bank #

Modified Bank # (Note changes or attach parent)

New X

Question History:

Question Cognitive Level: Memory or Fundamental Knowledge X

Comprehension or Analysis

10 CFR Part 55 Content: 55.41

55.43 4, 5

Comments: