# STAFF ASSESSMENT OF AREVA CODES AND METHODS WITH REGARDS TO THERMAL CONDUCTIVITY DEGRADATION EXPERIMENTAL DATA

## 1 INTRODUCTION

NUREG/CR-6534, Volume 1, provides a description of relevant experimental data indicating degradation of fuel thermal conductivity with exposure. This NUREG/CR-6534, Volume 1, provides a discussion of the revisions to the FRAPCON-3 fuel thermal conductivity model based on more recent test data collected for irradiated fuel. Relevant excerpts from NUREG/CR-6534 are provided in this section for completeness.

## 2 RELEVANT EXPERIMENTAL DATA

It has long been known that irradiation damage and the progressive buildup of fission products (rare earths, gases, and volatiles) with increasing fuel burnup in sintered urania and urania-plutonia fuel pellets will progressively reduce their thermal conductivity. The effect is stronger at temperatures less than 800K where the phonon-phonon form of heat transfer dominates. See, for example, the early work on this subject by Daniel and Cohen (1964) and the review by Lokken and Courtwright (1977) that suggested that irradiation damage was the primary mechanism at low temperatures. Until relatively recently, however, this reduction in conductivity with increasing burnup has not been included in fuel performance codes because evidence was inconclusive that the effect was significant. The effect was considered insignificant because previously typical end-of-life burnup levels were low for light water reactor (LWR) applications (less than 4 atom percent), and the pellet operating temperatures were relatively high: 700K or higher at the pellet surface, and 1300K and higher at the pellet center.

Computer code predictions of pellet operating temperatures are typically benchmarked against steady state fuel centerline thermocouple measurements from instrumented test fuel rods. These data are combined with the test coolant calorimetry and neutron detector data to yield the total thermal resistance from coolant to pellet center, i.e. the increase in center temperature per unit increase in the local linear heat generation rate (LHGR).

This resistance can then be correlated to fuel pellet type, fuel rod design and dimensions, and burnup. However these data are not definitive regarding the partition of the total thermal resistance between the pellet and the fuel-cladding gap. Thus, an increase in the measured (total) thermal resistance with increasing burnup, which may in part be due to thermal conductivity degradation due to burnup and fuel cracking, has been typically explained as solely due to an increase in the thermal resistance of the pellet-cladding gap. The gap resistance can certainly increase because of pellet densification (which increases the gap size) and/or degradation of the helium-gap gas conductivity by the addition of noble fission gases (xenon and krypton) released from the fuel pellets. Fuel swelling and cladding creepdown decrease the thermal resistance with increasing burnup. Fuel center temperature data also fail to define the partition of thermal resistance within the fuel pellet (e.g., the low and high temperature regions).

Thus, fuel performance codes have typically been benchmarked by retaining fuel thermal conductivity applicable to uncracked pellets and then, tuning the gap closure mechanisms to achieve agreement with in-reactor measurements of pellet center temperature. This approach yields conservative (high) estimates for the pellet surface and average temperatures, and hence for the stored energy associated with a given combination of LHGR and center temperature (see Lanning 1982). One major use of code-calculated fuel temperatures is to estimate the fuel-stored energy and gap conductance as initial conditions for analyzing loss-of-coolant accidents (LOCAs). Furthermore, the limiting LOCA initial conditions generally occur at very low burnup for pressurized water reactors (PWRs) and within 10- to 20-GWd/MTU burnup for boiling water reactors (BWRs). Thus, for this important code application, the error produced by ignoring burnup-induced degradation from fuel thermal conductivity was deemed both small and acceptable.

In the past 20 years, however, requests to NRC have been made for commercial fuel operation to ever higher uranium burnup levels, exceeding 7 atom percent, and this has resulted in renewed interest in the degree and nature of burnup-induced degradation from pellet thermal conductivity. At the same time, better experimental evidence, both in-reactor and ex-reactor, has been obtained to define the conductivity degradation as a function of burnup and temperature.

An instrumented assembly referred to as the Halden Ultra-High-Burnup Experiment has indicated a steady degradation in urania fuel thermal conductivity (averaged over the temperature range from ~750 to 1200K) of ~5 to 7 percent relative per 10 GWd/MTU, for burnups up to 88 GWd/MTU (Wiesenack 1997). These measurements are described in the open literature (see Kolstad 1992; Kolstad et al. 1991; Wiesenack 1995). These data are supplemented by results from other Halden instrumented tests involving small-gap rods operated to significant burnup with surviving centerline thermocouples. The degradation rate initially reported (Kolstad et al. 1991) is qualitatively consistent with the results of laser-flash diffusivity measurements on unirradiated simulated high-burnup fuel performed at Chalk River National Laboratory (CRNL), Ontario, Canada (Lucuta et al. 1991; Lucuta et al. 1992).

Following scrutiny of temperature data trends with burnup in small-gap xenon-filled rods, Halden now proposes that the thermal gap resistance becomes very small (smaller than previously thought) when fuel swelling and cladding creepdown closes the gap and that, therefore, the observed trend in the Ultra-High-Burnup fuel temperatures indicates even stronger pellet conductivity degradation.

## 3 REFERENCES

1. Daniel, R. C. and I. Cohen. 1964. *In-Pile Effective Thermal Conductivity of Oxide Fuel Elements to High Fission Depletion*. BAPL Report WAPD-246. Bettis Atomic Power Laboratory/Westinghouse Advanced Products Division, U.S. Department of Energy, Washington, D.C.

2. Kolstad, E. 1992. “Fuel Rod and Core Materials Investigations Related to LWR Extended Burn up Operation,” *J. of Nucl. Mater.*, Vol. 188, pp. 104-113.

3. Kolstad, E. H. Devold, and V. Tossi. 1991. “High Burn up Fuel Behavior Studies by In-Pile Measurements,” *ANS/ENS International Topical Meeting on LWR Fuel Performance*, Avignon, France, pp. 838-849.

4. Lanning, D. D. 1982. “The Possible Impact of Fuel Pellet Cracking on Inferred Gap Conductance and Stored Energy,” *Nuclear Technology*, Vol. 56, pp. 565-574.

*5.* Lokken, R. O., and E. L. Courtwright. 1977. *A Review of the Effects of Burnup on the Thermal Conductivity of UO2*, BNWL-2270, Pacific Northwest Laboratory, Richland, Washington.

6. Lucuta, P. G., H. J. Matzke, R. A. Verrall, and H. A. Tasman. 1992. “Thermal Conductivity of SIMFUEL,” *J. of Nucl. Mater.*, Vol. 188, pp. 198-204.

7. Lucuta, P.G., R. A. Verrall, H. J. Matzke, and H. A. Tasman. 1991. “Microstructural Features of SIMFUEL - Simulated High-Burnup UO2-Based Nuclear Fuel,” *J. of Nucl. Mater.,* Vol. 178, p. 48-60.

8. Wiesenack, W. 1995. “High Burn up Phenomena - Results from Experiments in the Halden Reactor,” presented at the *CSNI Specialists' Meeting on Transient Behavior of High Burn up Fuel,* September 12 to 14, 1995, at Cadarache, France, OCDE/GD(96) 197, NEA/CSNI/R(95)22, pp. 405-416.

9. Wiesenack, W. 1997. “Assessment of UO2 Conductivity Degradation Based on In-Pile Temperature Data,” in *Proceedings of the ANS/ENS International Topical Meeting on Light Water Reactor Fuel Performance,* Portland, Oregon, March 2-6, 1997, pp. 507-511.

# SURVEY OF AREVA BOILING WATER REACTOR

# SAFETY ANALYSIS METHODS

## 4 INTRODUCTION

The U.S. Nuclear Regulatory Commission (NRC) requires that the safety of nuclear power plants be evaluated in accordance with the requirements of Title 10 of the *Code of Federal Regulations* (10 CFR) 50.34, “Contents of Applications; Technical Information”; 10 CFR 50.36, “Technical Specifications”; and 10 CFR 50.46, “Acceptance Criteria for Emergency Core Cooling Systems for Light-Water Nuclear Power Reactors.” To demonstrate compliance with the Commission’s regulations, licensees use a series of computer codes to perform safety analyses. Generally, either licensees or vendor organizations develop these computer codes, which are then generically approved by the NRC.

An essential element in the computational approach is the modeling of various physical processes important to the prediction of transient and accident events. These models are used in a concerted approach to simulate reactor conditions for postulated events and to assess particular figures of merit for comparison against applicable regulatory criteria.

Current licensing evaluations are performed using legacy fuel thermal performance models. These models simulate the heat transfer aspects of nuclear fuel elements under conditions of normal operation and accident conditions. The legacy fuel thermal performance models are specifically those models that the NRC staff developed and approved based on historical qualification data. These data were limited in terms of the range of exposure to levels far below those levels of exposure representative of modern day fuel designs and operating strategies.

Beginning in 1999, several vendor organizations submitted improved fuel thermal models to the NRC for review and approval. These new models incorporate more recent test data which indicate that exposure has a significant impact on the thermal-physical properties of the fuel. In particular, recent experience and experimental data indicate significant degradation of fuel pellet thermal conductivity with exposure. The NRC analysis of these newer, modern fuel models and recent data have led the staff to conclude that the use of the older legacy fuel models will result in predicted fuel pellet conductivities that are higher than the expected values.

Additionally, cycle fuel reloads for power reactors require safety analyses to be performed to ensure adequate protection by establishing operational and safety limits that cannot be exceeded during normal operation. The bases for these limits are cycle-specific safety analyses performed using a suite of NRC-approved computer methods. The NRC staff is concerned that the use of legacy fuel thermal performance models, at multiple points within the body of the safety analyses, may result in the downstream effect of calculated safety limit margins that are less conservative than previously understood.

Most NRC regulatory actions require some form of analysis and supporting documentation, the exact nature of which is determined by the type of action. In general, all of the mechanisms the NRC proposes to use to establish or communicate generic requirements, guidance, requests, or staff positions that would effect a change in the use of resources by NRC licensees include an accompanying regulatory analysis. A regulatory analysis is an integral part of NRC decision making. Many regulatory analyses can be classified as either backfit regulatory analyses or Committee to Review Generic Requirements regulatory analyses or both.

In accordance with these documentation requirements, the staff has considered the impact of fuel thermal conductivity errors on the body of safety analyses provided by AREVA to boiling water reactor (BWR) licensees. This document reports the results of the NRC staff evaluation.

## 5 BACKGROUND

To perform safety analyses, all code systems must include a calculational methodology for evaluating fuel thermal and mechanical performance. AREVA uses the RODEX2 and RODEX2A codes to perform fuel thermal-mechanical (T-M) analyses to support licensing safety analysis.

The NRC approved the RODEX2 and RODEX2A codes in the early and mid-1980s, respectively (References 21 and 25). At this time, validation data for calibrating and qualifying fuel T-M methods had not conclusively shown the effects of exposure on conductivity degradation. These methods considered a variety of mechanisms that impacted the fuel conductivity, for instance the treatment of fuel pellet cracking during irradiation. Subsequent to the NRC approval of RODEX2A, in the late 1990s, the staff approved an extension of the burnup limit of RODEX2A for application to boiling-water reactors (BWRs) (Reference 27).

Subsequent to the NRC approval of these codes, however, additional validation data were collected. The development of the RODEX4 best-estimate T-M method considered the additional validation data. The NRC staff approved RODEX4 in 2008 (Reference 5). A major difference between the RODEX2/2A and RODEX4 methods relates to the treatment of the fuel thermal conductivity degradation caused by exposure.

During a meeting with AREVA on April 21, 2009, the NRC staff requested and AREVA discussed the impact that fuel thermal conductivity may potentially have on various licensing analyses if the models were biased relative to the expanded validation database. To address this issue, AREVA provided two technical white papers to the staff on July 14, 2009, that provide the basis of an internal review of AREVA's codes against the defect determination criteria found in 10 CFR Part 21, "Reporting of Defects and Noncompliance." AREVA's review considered RODEX2, RODEX2A, and RODEX3.

During this review, AREVA determined that the TACO3 code may also be susceptible to errors introduced by the modeling of the fuel thermal conductivity. AREVA has entered an evaluation of TACO3 into its Corrective Action Program and is currently conducting Part 21 evaluations of TACO3.

## 6 CODE SYSTEM OVERVIEW AND INTERFACES

The NRC staff has reviewed the individual methodologies comprising the AREVA suite of codes used to evaluate BWR transients. The staff has also conducted a review of these code interfaces. This section provides an overview of the individual codes and their purposes and describes the connections between the individual methodologies in the code suite.

### 6.1 CASMO-4

At the onset of core analysis, calculations are performed to generate cross-sections for use in the core simulator code MICROBURN-B2. These cross sections are generated using the CASMO-4 lattice physics code (References 10 and 16). CASMO-4 is a neutron and gamma transport code based on the method of characteristics (MoC) approach. CASMO-4 is used to

generate two-group microscopic cross sections based on depletion and branch calculations employing two-dimensional detailed lattices.

These calculations are used to parameterize the microscopic cross sections for relevant nuclides as a function of the fuel temperature, coolant density, spectral index, spectral history, control density, channel bow, and burnup. In effect, CASMO-4 homogenizes and condenses the cross sections for use in a nodal core simulator. These cross sections are used in downstream analyses to generate the two-group macroscopic cross sections required for three-dimensional nodal calculations.

CASMO-4 is also used to generate several other parameters required for full-core analysis. CASMO-4 generates the detailed two-dimensional flux shapes used to characterize the subnodal flux shape and power distribution. These data are captured in the form of parameterized edge and corner discontinuity factors and infinite lattice pin power peaking factors.

CASMO-4 is also used to generate detector response kernels based on detailed transport calculations. These detector response kernels can then be used to determine instrument neutron or gamma flux based on the detailed pin power distributions, gamma sources, and two-dimensional geometry.

### 6.2 MICROBURN-B2

Nuclear design analyses are performed using MICROBURN-B2. MICROBURN-B2 is a two-group, three-dimensional nodal diffusion code (References 7 and 10). MIRCOBURN-B2 uses the microscopic cross sections and discontinuity factors to solve the steady-state neutron balance equation based on diffusion theory. The results of the MICROBURN-B2 calculation determine the distribution of neutron flux within the core on a nodal level.

The nodal neutron flux distribution is used to determine the nodal powers. Lattice information is used to construct the detailed subnodal pin powers, channel wall fluxes, and detector response. The fluxes and microscopic cross sections are used to explicitly track the accrual and depletion of relevant nuclides during irradiation. This allows the core simulator to model cycle exposure.

The core simulator includes a thermal-hydraulic model to predict the core flow, enthalpy, and void distributions. These calculations allow for the evaluation of steady-state critical power ratio. The core simulator also allows for modeling core maneuvers, such as control blade swaps, to perform cycle step through. It also has the capability to model quasi-steady-state analyses, such as control rod withdrawal analysis.

The core simulator provides input to downstream transient analyses and T-M performance evaluations. These data are provided in the form of rod power histories, macroscopic cross sections, eigenvalues, rod positions, core geometry, and power distributions. The data allow for the initialization of transient codes and for the parameterization of the macroscopic cross sections to nodal parameters.

### 6.3 RODEX2

Fuel rod parameters include the thermal and mechanical properties of the fuel rod. The most relevant of these parameters to the transient analysis are the fuel conductivity and the gas gap

conductance. These parameters affect the transient coupling between the neutronic response and the fluid response during anticipated operational occurrences (AOOs) or other transients.

The RODEX2 code incorporates models to describe the thermal-hydraulic condition of the fuel rod in a flow channel; the gas release, swelling, densification, and cracking in the pellet; the gap conductance; the radial thermal conduction; the free volume and gas pressure internal to the fuel rod; the fuel and cladding deformations; and the cladding corrosion. The calculations are performed on a time-incremental basis with conditions being updated at each calculated increment.

RODEX2 is used to evaluate the fuel T-M performance and provides input to downstream analysis codes to characterize the fuel thermal properties (conductivity and gap conductance) (References 21, 24, 25, and 26). To perform these analyses, the RODEX2 code requires power history information from the core simulator.

The power history information, the rod geometry, and empirical models are used to model the fuel pellet changes, the fuel temperature, and fission gas release. These models allow for the characterization of the fuel thermal conductivity as a function of exposure and temperature and the gap conductance as a function of the gas composition.

RODEX2 is used for a variety of calculations and provides input data for most downstream transient and accident analysis codes in the AREVA BWR methods suite. Table 1, taken from Reference 21, summarizes the inputs that are supplied to RODEX2 to perform several of these calculations. These include the initial conditions of a loss-of-coolant accident (LOCA), rod internal pressure, steady-state strain, transient stress and strain, and cladding collapse calculations. In the case of transients, RODEX2 calculations are coupled with the RAMPEX code. In the case of cladding collapse calculations, RODEX2 calculations are coupled with the COLAPX code.

### 6.4 RODEX2A

RODEX2A is a modified version of RODEX2 that incorporates improvements to the fission gas release model. This modified version of RODEX2 was approved by the NRC for use in a limited number of T-M evaluations for BWR applications (Reference 27). This document refers to both RODEX2 and RODEX2A as RODEX2; however, for the following analyses, RODEX2A has replaced RODEX2 for BWR steady-state applications:

- fuel rod internal pressure
- cladding strain
- corrosion
- hydrogen absorption

- cladding temperature
- initial conditions for fuel rod collapse analyses

The NRC staff notes that RODEX2A calculations are not used in downstream transient or accident analysis applications.

### 6.5 RAMPEX

RAMPEX is a code that is used in conjunction with RODEX2 to perform transient fuel T-M analyses. This code is specifically used to analyze the transient fuel rod behavior under overpower transient conditions to assess the ability of the steady-state LHGR limit to preclude the possibility of exceeding the fuel centerline melt and cladding strain criteria specified in Reference 30.

### 6.6 COLAPX

The RODEX2 and COLAPX codes are used to evaluate the potential for cladding creep collapse. The calculations are performed to ensure that no significant axial gaps can form in the fuel column during fuel densification (Reference 23).

### 6.7 RODEX4

In 2008, the NRC approved RODEX4 as a standalone licensing evaluation methodology that could be used to perform several safety analyses that were previously performed using the RODEX2 code. These calculations are limited to the fuel T-M calculations. In the current survey, the staff notes specific features of the improved RODEX4 thermal conductivity model.

The RODEX4 thermal conductivity model is a function of temperature, burnup, gadolinia, and plutonium content, similar to the thermal conductivity model in FRAPCON-3. The NRC audit code, FRAPCON-3, currently utilizes a urania fuel thermal conductivity model proposed by Nuclear Fuel Industries (NFI) of Japan. Pacific Northwest National Laboratory (PNNL) has modified the NFI model to better fit the current data. The modified NFI model is based on recent high burnup and high temperature thermal conductivity data and provides a good comparison to both in-reactor fuel temperature and ex-reactor diffusivity data at high burnups. The RODEX4 model is based on the thermal conductivity data at intermediate to high temperatures of unirradiated urania using measurements of thermal diffusivity and heat capacity taken by a specialized laser-flash method.

Comparison of these two models for unirradiated urania shows that the RODEX4 model predicts slightly higher thermal conductivity than the FRAPCON-3 model with increasing temperature. Based on results consistent with FRAPCON-3, the NRC staff considers the RODEX4 model acceptable.

For urania-gadolinia fuel, the RODEX4 thermal conductivity model contains a degradation function that is proportional to the weight fraction of gadolinia contained in the burnable absorber rods. To assess the thermal conductivity penalty applied in RODEX4 for gadolinia additions, the RODEX4 model was compared to the similar correction for gadolinia addition in FRAPCON-3. At high temperature, the FRAPCON-3 thermal conductivity model under-predicts these data, while the RODEX4 model provides a best-estimate prediction of these data. Based on the best-estimate predictions, the NRC staff finds the RODEX4 gadolinia modification to fuel thermal conductivity acceptable.

### 6.8 COTRANSA2

The transient analysis process utilizes COTRANSA2. COTRANSA2 is a systems analysis code with a core model capability for evaluating neutron kinetics (References 9 and 3). The core

model is based on the COTRAN model with supporting models for the other vessel internals and the main steamline.

COTRANSA2 is a 1.5-group, one-dimensional nodal diffusion kinetics code with a thermal-hydraulic model. The thermal-hydraulic model is a three-equation model with corresponding empirical closure relationships. The thermal-hydraulic model is a single-fluid model which presumes that the phases are in thermal equilibrium but allows phasic velocity differences through the use of a void quality correlation.

### 6.8.1 System Initialization

System initialization refers to the process whereby steady-state analysis data from the core simulator and fuel rod performance methods are used in establishing the steady-state conditions for transient calculations. In the AREVA code system, the key parameters affecting the transient initialization process are the core power shape and pressure drop.

#### 6.8.1.1 Axial Power Shape

The initialization process in COTRANSA2 requires core power shape information and cross-section data from MICROBURN-B2. In the initialization, the two-group, three-dimensional MICROBURN-B2 cross sections are collapsed to 1.5-group, one-dimensional cross sections for use in COTRAN. The COTRANSA2 input is normalized in such a manner that the axial power shape and total core power predicted by the core simulator are maintained in the transient calculation.

#### 6.8.1.2 Pressure Drop

MICROBURN-B2 and COTRANSA2 use different thermal-hydraulic models. Thus, the two codes will predict different core flow rates and pressure drops for the same core power level. To correct the steady-state initial conditions predicted by COTRANSA2, an adjustment is made in the initialization to bring the core pressure drop calculated by COTRANSA2 into agreement with the core pressure drop calculated by MICROBURN-B2.

### 6.8.2 Transient System Response

Transients are modeled with the COTRANSA2 code using input from MICROBURN-B2 and RODEX2. The transient analyses are performed to determine the core power history and pressure response to changing core conditions.

COTRANSA2 has sufficient capability in the treatment of the upstream MICROBURN-B2 cross sections to model reactivity changes resulting from changing coolant conditions, fuel temperature, and scram bank position. COTRANSA2 includes a six-group, delayed neutron precursor model and an 11-group decay heat model.

However, the transient evaluation requires additional information in terms of the transient heat deposition and thermal conductive properties. COTRANSA2 is used to output power and pressure boundary conditions that are employed in the transient critical power methodology, XCOBRA-T.

#### 6.8.2.1 Gap Conductance

The gap conductance is a function of the fission gas composition and gas gap thickness. These data are determined for the average fuel rod, based on upstream RODEX2 calculations, and are used in COTRANSA2 for the transient evaluation. COTRANSA2 includes an internal model for the fuel thermal conductivity and heat capacity. The COTRANSA2 internal fuel thermal conductivity model is identical to the RODEX2 model.

#### 6.8.2.2 Heat Deposition Rate

To evaluate the transient, the heat released by fission will be allocated amongst the core internals and the coolant. The deposition of this heat will determine the transient rate of deposition to the coolant relative to the coolant flow. Therefore, COTRANSA2 requires user input to characterize the fraction of fission heat that is instantly deposited in the coolant, the bypass, the fuel pellet, and the fuel cladding. Deposition in these different volumes will dictate the coupling between the neutron power and the fluid response.

COTRANSA2 allows the user to enter specific values for these parameters or to allow PRECOT2 to determine these values based on the MICROBURN-B2 analysis. In all cases, these parameters are core average values that are applied in every axial node in the transient analysis. In the current standard production method, CASMO-4 was used to generate generic heat deposition fractions for use in the transient analysis.

## 6.9 XCOBRA-T

The transient critical power is evaluated using XCOBRA-T. XCOBRA-T is a purely thermal-hydraulic analysis code. XCOBRA-T shares the same one-fluid thermal-hydraulic models that COTRANSA2 uses. XCOBRA-T, however, is only a core analysis tool and does not consider the reactor pressure vessel (RPV) internals or coolant system (Reference 22).

XCOBRA-T retrieves radial power distribution information from MICROBURN-B2. This information is provided in the form of a radial power map and subbundle pin powers in the form of the $F_{eff}$. $F_{eff}$ characterizes the coolant-averaged pin power peaking factors and is an important term in the evaluation of the critical heat flux.

To determine the transient change in critical power ratio (ΔCPR), XCOBRA-T is run iteratively with different initial conditions in terms of initial bundle powers. These iterative calculations are performed until the transient minimum critical power ratio (MCPR) is predicted to be unity.

While performing the transient CPR calculation, the results from XCOBRA-T are also used to determine the transient fuel T-M performance to demonstrate acceptable margin to relevant T-M limits on strain and fuel centerline temperature (see Section 6.9.4 of this report).
To assess the critical power performance, XCOBRA-T requires core boundary conditions in terms of absolute core power, axial power distribution, and radial power distribution. XCOBRA-T also requires core inlet and outlet pressure boundary conditions to determine the core flow distribution. XCOBRA-T similarly requires the core flow and inlet subcooling. These parameters are provided by COTRANSA2 except for the radial power distribution, which comes from MICROBURN-B2.

In addition, XCOBRA-T requires information regarding the hot rod transient thermal conduction to evaluate the hot rod transient heat flux for use with the critical heat flux correlation to

determine the onset of rod dryout. Because XCOBRA-T is run iteratively, it also requires information regarding the change in channel mass flow rate with increasing power.

### 6.9.1 Hot Channel Flow Rate

The hot channel flow rate is determined according to a hydraulic demand curve. The hydraulic demand curve correlates the initial bundle power with the initial channel flow rate. These curves are generated and entered into XCOBRA-T based on XCOBRA calculations.

As XCOBRA is not normalized to the MICROBURN-B2 core pressure drop, an adjustment is made to the XCOBRA-T hot channel inlet loss coefficient to ensure that XCOBRA-T converges to the XCOBRA predicted mass flow rate for a given bundle power when the COTRANSA2 predicted core pressure drop is imposed as a boundary condition.

XCOBRA and MICROBURN-B2 have different two-phase friction multiplier models. The XCOBRA two-phase friction multipliers are based on the Martinelli-Nelson correlation. MICROBURN-B2 uses a more sophisticated modified Chisholm correlation that explicitly accounts for the mass velocity effect. Both XCOBRA and MICROBURN-B2 incorporate the improved quality-dependent, two-phase local loss multiplier.

While this calculational process would appear to yield a mismatch between the XCOBRA mass flow rate and the COTRANSA2 pressure drop, the MICROBURN-B2 channel seal loss coefficient is determined based on a combination of XCOBRA-predicted flow rates to match measured active in-channel flow rates. The ATRIUM-10 seal loss coefficient in MICROBURN-B2 is, therefore, tuned using XCOBRA analyses to match experimental channel flow rates. In this way, the XCOBRA flow rates and the MICROBURN-B2 flow rates are normalized.

The use of the hydraulic demand curve to match XCOBRA-T in-channel flows to XCOBRA in-channel flows ensures consistency with MICROBURN-B2. The normalization of the spacer grid loss coefficients in COTRANSA2 ensures consistency in the core pressure drop in XCOBRA-T with the MICROBURN-B2 core pressure drop. Therefore, the normalization processes are imposed to ensure that the XCOBRA-T core pressure drop, as well as the channel mass flow rates, is consistent with the steady-state MICROBURN-B2 code.

### 6.9.2 Hot Channel Rod Peaking

Hot channel rod peaking factors are determined according to the MICROBURN-B2 pin power reconstruction model. The MICROBURN-B2 pin powers are then converted to $F_{eff}$ values based on the critical power methodology using the bundle geometry information and the appropriate additive constants. Each nodal location is then assigned the maximum pin $F_{eff}$ as the nodal $F_{eff}$. Because COTRANSA2 is a one-dimensional code, the radial power distribution is assumed to be fixed during the transient critical power assessment.

### 6.9.3 Hot Rod Gap Conductance

The hot rod gap conductance is determined using RODEX2 calculations. The transient thermal conduction in XCOBRA-T is based on the same models as the RODEX2 code. The hot rod gap conductance, however, is conservatively determined by closing the gas gap to minimize the rod thermal resistance. This has the effect of conservatively increasing the transient rod heat flux during the critical power assessment.

### 6.9.4 Transient Fuel Rod Thermal-Mechanical Performance

Transient fuel rod T-M performance is evaluated on a cycle-specific basis. XCOBRA-T is used to determine the effect of the transient on the transient LHGR. XCOBRA-T transient analyses are used to establish the ratio of the peak transient heat flux (PHF) to the initial heat flux (IHF), ΔPHF/IHF. The ΔPHF/IHF is combined with the steady-state LHGR operating limit to determine the maximum transient change in LHGR. The maximum change in LHGR is compared to transient limits established by RODEX2 to ensure that plastic cladding strain and fuel centerline melt limits are met.

For instances in which specific rods are set to the LHGR operating limit in the steady state, the methodology allows for forcing a rod to the steady-state LHGR limit in effect by using the ΔPHF/IHF with the operating limit LHGR without explicit MICROBURN-B2 and COTRANSA2 calculations. As a one-dimensional model, COTRANSA2 captures the planar average change in rod power at each nodal level. Forcing higher radial peaking in any of the MICROBURN-B2 bundles would not increase the accuracy in the analysis.

## 6.10 STAIF

STAIF is a frequency domain code that simulates the dynamics of a BWR. STAIF's main output is a series of transfer functions that define the linear dynamic behavior of (1) the channel thermal hydraulics, (2) the fundamental-mode-coupled neutronics and thermal hydraulics, and (3) the subcritical-mode-coupled neutronics and thermal hydraulics. STAIF estimates the decay ratios for the above three modes of oscillation using a mathematical procedure that is applied to the computed transfer functions.

The current production version of STAIF includes model refinements to couple the previously approved STAIF code with MICROBURN-B2. MICROBURN-B2 provides initial conditions and cross-section data to STAIF. The refinements to STAIF include the selection of hydraulic correlations that improve the consistency between the steady-state core simulator and STAIF, add refined fuel pin heat conduction models, and utilize full modal kinetics for the regional mode (Ref. 41).

### 6.10.1 Thermal Hydraulics

The thermal-hydraulic model in STAIF was modified to be more consistent with the thermal-hydraulic model in MICROBURN-B2. Specifically, the following models were updated:

- The two-phase friction multiplier was updated from the **[ ]**
- The two-phase local loss multiplier was updated from the **[ ]**
- The single-phase friction factor was updated from a **[ ]**
- The spatial acceleration pressure drop model was updated from a **[ ]**

- The subcooled boiling energy distribution model was updated from the Zuber-Staub model to the Lahey Mechanistic model.

### 6.10.2 Fuel Pin Heat Conduction Models

The STAIF fuel pin heat conduction models implemented several improvements. Specifically, the following models were updated as described below:

- The fission energy deposition in the pellets had been assumed to be radially uniform. This assumption neglected the self-shielding effect. The uniform assumption was replaced with tabulated radial functions at several pin diameters and exposures. The energy deposition distribution is interpolated for each channel based on the exposure and pellet diameter.

- The density of urania was assumed to be constant and equal to the theoretical density. The fuel density as a percent of the maximum theoretical density was added to the code input to modify the urania density.

- The thermal conductivity of the fuel pellet was modified to be a function not only of the fuel temperature but also of the density, gadolinia concentration, and exposure. These inputs were added to the automatic code input from MICROBURN-B2.

- The pellet-clad gap conductance was input as a function of fuel type. This was replaced with a model that accounts for fuel pin geometry and the exposure and power levels. This replacement allows an effective means of producing nodal values of gap conductance for the stability calculation. In this way, each axial node has a representative gap conductance for the local fuel design, exposure, and LHGR.

The staff notes that RODEX 2 is the primary methodology used to assess changes in the fuel thermal parameters. In this case, information from MICROBURN-B2 is combined with RODEX2 calculations to provide the parameters for use in the stability calculation. The stability analyses are particularly sensitive to the fuel thermal resistance which directly affects the coupling between the dynamic thermal-hydraulic conditions and the neutron flux response.

In response to Request for Additional Information (RAI) 6 regarding the model updates to STAIF (hereafter referred to as STAIF RAI 6), Siemens Power Corporation (SPC, which is now AREVA) stated that RODEX2 underestimates the gap conductance to conservatively estimate fuel centerline temperature and stored energy for LOCA applications. To better match stability measurement qualification data, STAIF incorporates a bias correction to the gas gap conductance at all conditions (such as exposure and LHGR) of 600 BTU/ht/ft$^2$/°F.

The staff notes that biasing the gas gap conductance to lower values is conservative for stability analyses. In the STAIF application, the gas gap conductance bias was determined as a best-estimate correction to match qualification measurements.

### 6.10.3 Modal Kinetics

A fully modal treatment of the neutron kinetics is developed and applied in STAIF to replace the hybrid one-dimensional nodal/modal method for the regional mode calculation. This model

improvement allows for the calculation of regional mode flux oscillations on the basis of linearized perturbation theory with first flux harmonic weighting.

### 6.11 RAMONA5-FA

RAMONA5-FA is the transient system code used for the AREVA DIVOM methodology. RAMONA5-FA is a complete three-dimensional transient system code, and it is based on the Brookhaven National Laboratory's RAMONA3 code, which Studsvik-Scandpower later modified to become RAMONA5 V2.4. AREVA's RAMONA5-FA is based on the Studsvik version (Reference 15).

As with the earlier versions of the code, RAMONA5-FA uses a four-equation, nonhomogeneous, nonequilibrium, one-dimensional, two-phase flow model. The momentum equation is integrated through the vessel flow loop to predict the individual velocities for each vessel component and core channel inlet for each time step. The core model consists of parallel hydraulic channels allowing each individual fuel channel to be modeled separately.

AREVA's RAMONA5-FA code includes the following improvements:

- The neutron cross-section data and hydraulic core data are prepared automatically by coupling to the core simulator MICROBURN-B2. The differences in initial steady-state power distribution have been eliminated by applying an adaptive three-dimensional coupling method.

- A new modal neutron kinetics module has been installed in RAMONA5-FA to allow better user control over the oscillation mode.

- The fuel pin model in RAMONA was improved by incorporating models from the frequency domain stability code STAIF, including: (1) the fuel pellet conductivity dependence on temperature and exposure, (2) the detailed gap conductance model, and (3) the neutron self-shielding effects on power deposition distribution in pellets.

- AREVA's hydraulic and dryout correlations have been installed.

Section 4 of Reference 6 documents these modifications. In all likelihood, the most far-reaching modification made in RAMONA5-FA was the inclusion of the option to use modal kinetics expansion to allow three-dimensional neutronic equations to be solved. When this option is selected, RAMONA5-FA solves the three-dimensional neutronic equations based on an expansion in modes, which are calculated automatically from the power distributions from the steady state core simulator MICROBURN-B2.

### 6.12 EXEM

The EXEM BWR emergency core cooling system (ECCS) model is a combination of codes used to analyze predicted plant response to LOCA events. Reference 20 describes the original EXEM model. Advanced Nuclear Fuels (ANF, which is now AREVA) subsequently revised and submitted EXEM for NRC review and approval, as documented in Reference 2. Most recently, EXEM underwent substantial update and requalification and Framatome ANP (which is now AREVA) provided it for NRC review and approval as EXEM BWR-2000, as documented in Reference 13.

### 6.12.1 Original EXEM

The EXEM inputs for the core power distribution, initial core thermal-hydraulic conditions, and hot and average fuel rod conditions are calculated by upstream steady-state analyses performed using MICROBURN-B2, XCOBRA, and RODEX2. EXEM begins with the RODEX2 code calculating the parameter specifications. The RELAX code then calculates the blowdown until the low-pressure core spray reaches its rated value. RELAX then performs another calculation that defines the hot channel conditions, including the conditions determining the heat transfer coefficients. The FLEX code calculates the hydraulic characteristics of the reflood phase, and the HUXY code calculates the increase in temperature for the entire LOCA. These four codes in EXEM are coupled as shown in Figure 2 to perform the BWR LOCA analysis.

The blowdown phase of the LOCA computed by RELAX is an outgrowth of the RELAP4 code used for pressurized-water reactor (PWR) blowdown, and the refill/reflood phase computed by FLEX was developed from the REFLEX code used for PWR reflood calculations. The GAPEX code, which was replaced by RODEX2, was used for computing long-term burnup effects on fuels, and the HUXY/BULGEX codes used for computing transient clad heatup and deformation in the PWR models are incorporated in EXEM unchanged from their previously approved versions.

The basic equations of motion in RELAX are substantially similar to the equations in RELAP4 with the exception of a refinement in the definition of convective energy in the integrated energy equation. Additionally, RELAX incorporates a void-quality correlation to model phase slip.

The core heat up is calculated using HUXY. HUXY is a generalized geometry code and includes models for rod radiative heat transfer, quench, rod geometry changes for ballooning, and metal water reaction. HUXY receives boundary condition information from RELAX (or FLEX) in the form of pressure, flow, and transient heat transfer coefficient (Reference 11).

In HUXY the heat transfer coefficients are specified as a function of time to address the transition from nucleate boiling to film boiling to steam cooling during the blowdown phase. During blowdown, heat removal is calculated by applying the RELAX calculated heat transfer coefficients and fluid temperatures as convection boundary conditions on the HUXY calculation. During the spray cooling period, HUXY calculates cooling by radiation among rods within the assembly, to the internal assembly structure such as water rods or internal channels, and to the assembly channel. Convection heat transfer also is calculated based on conservative spray cooling heat transfer coefficients applied to the rods in the assembly according to position. Once the low pressure core spray reaches rated flow in the analysis, the heat transfer coefficients in HUXY switch to the spray heat transfer coefficients specified in 10 CFR 50 Appendix K.

HUXY calculates the rod-to-rod radiation heat transfer coefficients for generalized geometry using a view factor methodology. The view factors are corrected on-line to account for geometry changes associated with significant geometry changes, such as cladding ballooning.

The RELAX code is not required to calculate system behavior beyond the initial reflood, and the system calculation can be terminated after the time of hot plane reflood. The HUXY calculation continues through reflood by applying the Appendix K reflood heat transfer coefficient. The conservatism of the Appendix K spray heat transfer coefficients is confirmed through full-scale testing at the Fuel Cooling Test Facility (FCTF) (Reference 12).

The point of reflood is determined according to approved reflood criteria. These criteria are defined based on the results of FCTF tests that show a level of entrained liquid mass flux sufficient to cool the fuel. There are three reflood time criteria:

- A specified liquid mass flux **[** **]** The specified mass flux is called the threshold mass flux.
- The threshold mass flux must be sustained or exceeded **[** **]**
- The direction of the flux must be upward consistent with FCTF tests. This is called the reflood bias.

The data are smoothed to reduce the effects of numeric flow spikes and to provide assurance that the trend of the liquid entrainment meets the criteria. The time over which the smoothing is applied is **[** **]**

### 6.12.2 Revised EXEM

The EXEM evaluation model has undergone substantial revisions since NRC's initial review and approval. In the first revision, described in Reference 2, Advanced Nuclear Fuels (ANF, which is now AREVA) modified the RELAX code to improve convergence, eliminate discontinuities, and replace the Dougall-Rohsenow heat transfer correlation with the modified Dougall-Rohsenow correlation. The numerical modifications were based on an iterative hydraulics solution method proposed by Porshing and based on finite-difference solutions of the linear differential equations representing conservation of energy, mass, and momentum. ANF added logic to measure the degree of convergence and determine an optimal time step. ANF also improved (1) the critical flow model to prevent calculated flow from being reversed at critical flow junctions, (2) the bubble mass integration model by solving a quadratic equation instead of two linear approximations to determine mass and density, and (3) the drift flux model to provide a smoother transition between differing flow regimes.
The update to the RELAX drift flux model changed the pump model to represent the pump head and pump flow by two linear approximations solved simultaneously, corrected a discontinuity in the jet pump model, and modified the Dougall-Rohsenow heat transfer correlation. The modified form of this heat transfer correlation provides agreement with, or slightly conservative predictions relative to, pertinent experimental data.

ANF modified the FLEX code to alleviate numerical calculational difficulties that arose from the semi-explicit solution technique used in the code. The specific changes include (1) correcting the criteria for the core bypass flow balance convergence by modifying the core inlet pressure drop calculation to properly account for two-phase core inlet conditions and (2) improving the low pressure coding logic and editing code to smooth the transition in core inlet density as the lower plenum mixture reaches the core. ANF made other changes to FLEX to address calculated negative pressure values during pressure drops caused by a break and by smoothing in the density at the lower plenum outlet. The drift flux model changes at the beginning of the reflood stage cause rapid (computed) oscillations in the plenum mixture level and the midplane entrainment. ANF made other minor changes in FLEX to correct known discrepancies and to modify the format for the input to the code.

ANF modified the HUXY code to correct an overly conservative coefficient in the decay heat model. The corrected decay heat meets the requirements of Appendix K, “ECCS Evaluation Models,” to 10 CFR Part 50, “Domestic Licensing of Production and Utilization Facilities.” The applicant made no other changes to HUXY.

Figure 3 provides an updated process diagram for performing ECCS-LOCA analyses using the revised EXEM methodology.

### 6.12.3 EXEM BWR-2000

The EXEM BWR-2000 model is the current standard production method (Reference 13). The EXEM BWR-2000 model consists of a series of computer codes (RODEX2, RELAX, and HUXY) linked together to perform a LOCA analysis to demonstrate plant and fuel design conformance to the criteria of 10 CFR 50.46 and the requirements of Appendix K to 10 CFR Part 50. Overall, the methodology analyzes the transient chronologically in phases consisting of (1) initialization, (2) blowdown, (3) refill or spray cooling, and (4) reflood. System calculations are performed for each phase of the transient. The results of these calculations are used to provide boundary conditions for fuel assembly heatup calculations that yield fuel rod temperatures and metal-water reaction results at the lance of interest for a single fuel assembly throughout the LOCA. Figure 4 depicts the calculational process.

The revisions made to the EXEM BWR ECCS methodology to create EXEM BWR-2000 include a number of changes. In particular, the system blowdown code (RELAX) in the methodology was upgraded and the core reflood code (FLEX) was eliminated. The revision and additional qualification was performed to address the NRC core performance inspection findings documented in Inspection Report 99900081/97-01 (Reference 37).

Additional improvements to the RELAX code were also implemented in the development of EXEM BWR-2000. These changes include the following:

- replacement of the Ishii drift flux model by extending the Ohkawa-Lahey correlation for the full range of void fractions
- inclusion of appropriate critical heat flux (CHF) correlations for new fuel designs
- upgrade of the two-phase pump degradation model based on Combustion Engineering-Electric Power Research Institute data
- increased core, hot channel, and jet pump nodalization
- modification of other application options to improve code performance during refill and reflood, including reflood criteria
- inclusion of an enthalpy injection model to ameliorate exaggerated condensation of subcooled core spray

RODEX2 and HUXY were not upgraded as part of the methodology upgrades embodied in the approved EXEM BWR-2000 model.

## 6.13 Special Analyses

Special analyses refer to the calculations of special events, primarily anticipated transient without scram (ATWS) and station blackout (SBO), which are considered beyond the design basis. To perform these evaluations, AREVA relies on computer codes to simulate the expected plant behavior in response to these events.

### 6.13.1 Anticipated Transients without Scram

An ATWS event is a postulated transient with a common-mode failure of the reactor protection system (RPS), such that the scram function of the RPS is not fulfilled. The NRC has previously concluded that the likelihood of an inability to scram was exceedingly low; therefore, the agency has classified ATWS as a beyond design-basis accident. In 1984, the NRC issued 10 CFR 50.62, "Requirements for Reduction of Risk from Anticipated Transients without Scram (ATWS) Events for Light-Water-Cooled Nuclear Power Plants" (known as the ATWS rule), requiring that plants incorporate mitigating measures, including plant modifications, to ensure that the consequences from a postulated ATWS event were acceptable.

AREVA does not have a generically approved method for analyzing ATWS events, with one exception. The NRC has approved AREVA's COTRANSA2 code for the purpose of analyzing ATWS overpressure events up to the time of peak vessel pressure (Reference 3).

Historically, AREVA reload licensing evaluations and analyses supporting license amendment requests provide justification for the continued applicability of ATWS analyses performed for the plant by another fuel vendor. These justifications are varied based on the plant-specific application. The reactivity characteristics of the fuel analyzed and the AREVA fuel are compared to gauge relative plant behavior expected during the initial pressurization and boration stages of the ATWS (Reference 14). Additional calculations may be performed to assess comparative safety/relief valve (SRV) flow during the natural circulation stage of the ATWS using AREVA standard production codes to gauge the relative containment behavior (Reference 38).

Alternatively, licensees may request that another fuel vendor provide an ATWS analysis using an approved methodology with input parameters representative of the AREVA fuel loaded in the core. References 39 and 40 provide a representative staff evaluation of this situation.

### 6.13.2 Anticipated Transient without Scram with Instability

As a result of large power oscillations experienced at LaSalle Unit 2 following an inadvertent ATWS recirculation pump trip on March 19, 1988, the staff initiated a reexamination of the characteristics and consequences of BWR instability under ATWS conditions (Reference 53). Limiting ATWS instability events are characterized by pressurization, failure of the control rods to insert, and large bypass capacity. Under these conditions, large power oscillations are expected to develop, and the staff was concerned that thermal-hydraulic instability may exacerbate the consequences of a postulated ATWS.

#### 6.13.2.1 Generic Assessment

The Boiling Water Reactor Owners Group (BWROG) submitted licensing topical reports (LTRs) NEDO-32047, "ATWS Rule Issues Relative to BWR Core Thermal-Hydraulic Stability," issued

June 1995, and NEDO-32164, “Mitigation of BWR Core Thermal-Hydraulic Instabilities in ATWS,” issued December 1992 (References. 53 and 54, respectively), to provide a basis for appropriate mitigating actions to eliminate ATWS instability as an operational or regulatory concern. The BWROG contracted with GE Nuclear Energy (GE) to evaluate the characteristics and consequences of large power oscillations under ATWS conditions using the TRACG code. The staff reviewed the proposed changes to the emergency procedure guidelines (EPGs) that were proposed in the LTRs based on the TRACG studies.

The staff approved these LTRs in 1994 on the basis of its acceptance of the TRACG code as an adequate tool for estimating qualitatively the global behavior of operating reactors during transients that may result in large power oscillations. The staff also based its conclusions regarding the applicability and acceptability of the revised EPGs on the analyses that were performed for limiting ATWS conditions. These conditions were determined to occur for pressurization ATWS events (such as turbine trip) at a high power-to-flow ratio (such as points in an expanded operating domain above the rated power rod control line) with a large bypass capacity (100 percent).

The staff approval of these LTRs, therefore, constitutes its acceptance of TRACG as a means to qualitatively evaluate the consequences of ATWS instability and to assess the effectiveness of mitigating actions in accordance with the EPGs. The analyses provided in the LTRs formed the basis for the generic staff conclusions regarding the revised EPGs; however, the staff notes that, subsequent to the staff approval of NEDO-32407 and NEDO-32164, several plants have adopted yet further expanded operating domains, such as extended power uprate (EPU). During its review of certain license amendment requests to implement EPU, the staff has asked that licensees demonstrate the continued applicability of the generic TRACG evaluations to their specific EPU core and plant configuration in order to assure the staff of the continued effectiveness of the mitigating actions in the EPGs.

Generally speaking these mitigating actions remain appropriate and applicable because the highest rod line for EPU operation remains identical to the highest rod line for the maximum extended load line limit analysis (MELLLA) operation. Therefore, TRACG ATWS instability analyses are rarely required. However, the staff has raised concerns regarding ATWS instability for the proposed MELLLA+ expanded operating domain in which the core power-to-flow ratio at the onset of an ATWS event may be even higher.

6.13.2.2 Plant-Specific Assessment

AREVA does not have a generically approved method for the analysis of ATWS events. In so far as ATWS instability is dispositioned in AREVA’s reload licensing evaluations or license amendment request analyses, the approach is to justify the continued applicability of the BWROG analyses to the plant-specific application. AREVA has, historically, provided either qualitative justification for the continued applicability (see References 39, 40, and 14) or has provided additional calculations performed using a modified version of the RAMONA5-FA code (see Reference 38).

### 6.13.3 Station Blackout

The term “station blackout” refers to the complete loss of alternating current (ac) electric power to the essential and nonessential switchgear buses in a nuclear power plant. SBO, therefore, involves the loss of offsite power concurrent with turbine trip and failure of the onsite emergency ac power system, but not the loss of available ac power to buses fed by station batteries

through inverters or the loss of power from “alternate ac sources.” Based on 10 CFR 50.63, “Loss of All Alternating Current Power,” all licensees and applicants are required to assess the capability of their plants to maintain adequate core cooling and appropriate containment integrity during an SBO and to have procedures to cope with such an event.

The specific regulatory criterion in 10 CFR 50.63 states that the reactor core and associated coolant, control, and protection systems, including station batteries and any other necessary support systems, must provide sufficient capacity and capability to ensure that the core is cooled and appropriate containment integrity is maintained in the event of an SBO for the specified duration.

The postulated SBO event for a BWR results in scram, feedwater trip, turbine trip, and main steam isolation valve (MSIV) closure. The progression of the event results in automatic initiation of the high-pressure coolant injection (HPCI) system to regulate the RPV water level. During the coping period, steam is relieved to the suppression pool through the SRVs. Analyses are performed to ensure adequate core cooling and acceptable containment pressure and temperature relative to design limits.

During its review of the constant pressure power uprate licensing topical report (CLTR), the staff considered the potential for operation at EPU conditions to affect the plant response during an SBO. The higher licensed power level will result in a higher decay heat load relative to those present at lower pre-EPU power levels. Therefore, EPU applicants are required to reanalyze the SBO event on a plant-specific basis.

AREVA does not have a generically approved method for the analysis of SBO events. In so far as SBO is dispositioned in AREVA’s reload licensing evaluations or license amendment request analyses, the approach is to justify the applicability of analyses performed by other reactor fuel vendors to core reloads of AREVA fuel or to provide calculations performed using the modular accident analysis program code (see References 39, 40, and 14).

# 7 SAFETY ANALYSIS IMPLICATIONS

## 7.1 Steady State

The steady-state core analysis codes include RODEX2 and CASMO-4/MICROBURN-B2. These codes are used to assess the performance of any given core design against applicable T-M and nuclear acceptance criteria established in the staff’s standard review plan (see NUREG-0800, “Standard Review Plan for the Review of Safety Analysis Reports for Nuclear Power Plants” (hereafter referred to as the SRP), References 30, 31, 32, and 33). In this section, the staff evaluated the impact of fuel thermal conductivity biases on the efficacy of these steady-state codes to evaluate reactor performance relative to the acceptance criteria.

### 7.1.1 Thermal-Mechanical Criteria

General Design Criterion (GDC) 10, “Reactor Design,” requires that specified acceptable fuel design limits (SAFDLs) are not exceeded during any condition of normal operation. To demonstrate compliance with GDC 10, fuel rod T-M design limits are established to ensure fuel rod integrity in its core lifetime along the licensed power/flow domain during normal steady-state operation and in the event of an AOO. The LHGR limit is an exposure-dependent limit placed on the rod peak pin nodal power that ensures the integrity of the fuel cladding during normal steady-state operation and limits the initial heat generation rate during transient thermal and

mechanical overpower conditions. The internal rod pressures during steady-state operation, the maximum fuel temperature, and the cladding strain during transients (e.g., AOOs) all affect the fuel integrity.

The analyses performed in support of a reload batch establish the limitations on the LHGR for BWR fuel. These limitations take the form of safety limits, which protect directly against the violation of an SAFDL, and operational limits, which preserve the applicability of the design analyses which, in turn, protect against fuel failures. The LHGR limits are established to protect against fuel failure resulting from transient or steady-state overstress of the cladding and from transient or steady-state overheating of the fuel pellet.

Appendix B to Reference 19 describes an approach for control of operation within the LHGR safety limit. The design LHGR limit and the maximum average planar linear heat-generation rate (MAPLHGR) limit have been combined, based on predicted local power peaking factors, to establish a single nodal power limit as a function of burnup for technical specification purposes. This limit, which is expressed as maximum planar LHGR versus burnup, bounds both the LHGR and the MAPLHGR, and replaces existing technical specification limits on design LHGR, peaking factor, and MAPLHGR.

Under some conditions of control rod insertion, it is possible that temporary high local peaking factors in the vicinity of inserted control blades could result in a violation of the LHGR design safety limit without exceeding the proposed technical specification limit curve. Although the probability of such a condition is expected to be very small, the POWERPLEX core monitoring system monitors local LHGR independently of MAPLHGR to ensure that the condition is identified and can be avoided using procedural controls. The staff concludes that the technical specification simplification of combined safety limits, in conjunction with procedural controls based on POWERPLEX monitoring, does not significantly increase the probability of exceeding the SAFDL.

The design LHGR limit, which the POWERPLEX system refers to as the fuel design limit ratio, Exxon (FDLRX), is established to ensure that operation of the fuel remains consistent with the power distributions assumed in the fuel design analysis for pellet-cladding interaction. A second limit, which the POWERPLEX system refers to as the fuel design limit ratio, centerline melt (FDLRC), is established as an operational LHGR limit to protect against fuel failure from pellet overheating during AOOs and to limit the radial peaking distribution during operation at off-rated conditions. The FDLRC is an operational limit which protects against the occurrence of calculated fuel centerline melting during hypothetical conditions.

#### 7.1.1.1 Internal Rod Pressure

SRP Section 4.2 (Reference 33) identifies excessive fuel rod internal pressure as a potential fuel system damage mechanism. AREVA utilizes an internal rod pressure limit which is greater than the system pressure. In addition, AREVA has imposed a second limit that requires that the fuel-cladding gap remain closed during constant and increasing rod power operation under normal reactor operating conditions whenever the rod internal pressure exceeds the nominal system pressure.

Generic LHGR limit curves were provided to the NRC for review and approval for Exxon Nuclear Company 8x8 and 9x9 fuel designs, as described in Reference 23. These curves considered conservative LHGR histories relative to operating experience. However, RODEX2 analyses may be performed using cycle-specific LHGR histories to assess rod internal pressure in

accordance with Reference 21. The staff mentions these generic curves in the scope of this survey to provide a concrete example of the exercise of the RODEX2 methodology to assess conformance with the internal rod pressure limits.

The rod internal pressure limit is specified by two conditions: (1) the rod internal pressure cannot exceed the reactor system pressure by more than **[ ]** pounds per square inch (psi) and (2) when the rod internal pressure exceeds the system pressure, the pellet and cladding gap does not reopen during steady-state or increasing power operation (Reference 23). By limiting the internal pressure and ensuring that the gap does not reopen, the limits provided ensure that the cladding will not fail as a result of cladding liftoff.

RODEX2 calculations for rod internal pressure are performed using a burnup dependent LHGR history either on a cycle-specific or generic basis. The power history on a cycle-specific basis is defined by the most limiting radial power peaking, enhanced with appropriate uncertainties, and utilizes the calculated axial peaking (Reference 21). Calculations are carried out to the end of life using the rod power histories, and the results are compared against the rod internal pressure limit criteria.

AREVA provided additional benchmarking of the RODEX2A code against more recent fission gas release data and rod internal volume measurements in Reference 42 (hereafter referred to as the BWR white paper). The results indicate that, up to exposures of 62 megawatt days per kilogram of uranium (MWd/kgU), the predictions of RODEX2A are consistent with the data and could be considered to be a best estimate. The BWR white paper also clarifies that an additional **[ ]** conservatism is applied to the rod internal pressure analysis. On these bases, the staff concludes that the rod internal pressure calculations performed specifically using the RODEX2A code are acceptable despite biases in the prediction of the fuel conductivity with exposure.

7.1.1.2 Fuel Melting

SRP Section 4.2 specifies fuel centerline melting as a potential fuel damage mechanism. Therefore, calculations are performed to ensure that fuel centerline melting does not occur as a consequence of normal operation.

Fuel rod centerline temperatures are determined at steady-state, 120-percent overpower conditions as a check against the occurrence of calculated centerline melting during AOOs. This analysis is performed with RODEX2 as part of the fuel mechanical design analysis. The operating temperature, the overpower temperature, and the fuel melting temperature are calculated for the expected operating lifetime and representative expected power history for the fuel. If the operating power history is not bounded by the analytical operating history used in the generic mechanical design report, then the fuel centerline temperature analysis is performed on a plant-specific basis (Reference 19).

Reference 23 specifies that the procedure for evaluating steady-state fuel centerline melting margin is assessed similarly to the rod internal pressure margin. That is, the power histories may be either generic or cycle specific. According to Reference 21, when cycle-specific calculations are performed, the power history assumed is based on limiting radial and axial peaking factors, including margin, to account for uncertainties. The resultant steady-state fuel centerline temperatures are compared to the fuel melting temperature to determine the fuel thermal margin.

The BWR white paper provides requalification of the RODEX2 and RODEX2A codes against fuel centerline temperature measurements, including the expanded database used in the development and qualification of RODEX4 (Reference 5). These data include the high burnup Halden data that was used by PNNL in the development of the FRAPCON-3.2 thermal conductivity relationship. The comparison of the RODEX2 calculations to the database indicates that the RODEX2 predictions of the fuel temperature steadily begin to underestimate the measurements of the centerline temperature with increasing exposure. The trend is slightly less evident in the RODEX2A comparison, where the predicted and measured temperatures are in greater agreement. However, the staff attributes this enhanced agreement to the compensating effect of the RODEX2A fission gas release model and the subsequently more aggressive degradation in gap conductivity present in RODEX2A calculations when compared to RODEX2.

On the basis of the expanded qualification, the BWR white paper presents a method for assessing the nonconservatism of not treating the thermal conductivity degradation with exposure for centerline fuel melt (CFM) analyses. Specifically, a polynomial fit was used to quantify the bias in the predicted CFM using both the qualification data in one approach and the direct RODEX4 comparisons in the second approach. Both approaches generated similar results. This is to be expected since the expanded qualification database was used to tune the RODEX4 empirical relationships to provide a best-estimate fit of the available data.
To demonstrate the magnitude of the nonconservatism, the bias in the CFM calculations was applied to the CFM limit instead of the calculated temperature. The revised 95/95 CFM limit was plotted and shown to coincide with the previous limit for low exposures, but then decreased more rapidly with higher exposure. AOO calculations were performed to demonstrate that margin exists to these revised limits. AOO calculations will bound the steady-state calculations because these analyses account for increased LHGR under limiting transient conditions. Section 7.2 of this document discusses the staff review of the transient analysis method impact.

The staff finds that the impact of biases in the fuel thermal conductivity model in the legacy codes results in biases in the prediction of margin to the CFM. While the calculations show that limits continue to be met, the legacy methods do not provide an acceptable basis for quantifying the margin without consideration of these biases. The staff anticipates that the impact of accounting for the bias would be further exaggerated for calculations performed using RODEX2, especially since RODEX2 does not have the same FGR model as RODEX2A and, therefore, would continue to predict very low overall fuel rod thermal resistance relative to expectations based on the most recent available test data. However, noting that the transient calculations will always bound the steady-state calculations, analyses to demonstrate margin to the limit for AOOs will ensure that the fuel design limits protect against CFM during steady-state operation.

#### 7.1.1.3 Cladding Strain

Under steady-state conditions, RODEX2 is used to evaluate the extent of pellet/cladding interaction (PCI) characterized by the contact force exerted by the fuel on the cladding and the deformation of the cladding caused by the applied forces. Table 1 from Reference 21 provides details regarding the assumptions for the RODEX2 calculational inputs used to perform steady-state strain.

For the steady-state strain calculations, each individual stress is calculated inside and outside the cladding and at both the midspan and spacer level. The applicable stresses at each level are then combined to get the maximum stress intensities. The analysis is performed at beginning and end of life and at hot and cold conditions. The stress analysis assumes

maximum fuel rod power, minimum fill gas pressure, and the most conservative fuel rod geometry (Reference 23).

The BWR white paper presented an approach to quantifying the sensitivity of the strain calculations performed using legacy methods to the fuel thermal conductivity bias. This sensitivity was then used to determine the impact on margin to the 1-percent strain limit.

RODEX4 calculations were performed to determine the sensitivity. This factor relates the strain to the rise in fuel temperature for a particular exposure (20 MWd/kgU). This exposure is the limiting exposure because it represents the point in exposure where expansion results in partial or full gap closure and the LHGR FDL is still high. Beyond this exposure, the LHGR decrease compensates greater biases in the prediction of the fuel temperature and its effect on the strain.

The quantified change in temperature resulting from the fuel thermal conductivity degradation at 20 MWd/kgU at the highest LHGR was calculated to be approximately **[ ]** ºF. Using the RODEX4 relationship, the predicted nonconservatism in the calculated cladding strain is **[ ]** percent. While **[ ]** percent seems small, the staff notes that this bias is substantial relative to the limit of 1 percent. The nonconservatism in the legacy code RODEX2A has been determined to be approximately **[ ]** percent at the typically limiting exposure point. Given that this occurs at a relatively low exposure, the staff anticipates that the RODEX2 nonconservatism will be substantially similar.

### 7.1.2 Nuclear Criteria

SRP Section 4.3 specifies the nuclear design acceptance criteria, which are based on meeting the following requirements from Appendix A to 10 CFR Part 50:

- GDC 10, “Reactor Design,” requiring the reactor design (reactor core and associated reactor coolant, control, and protection systems) to ensure that the SAFDLs are not exceeded during any condition of normal operation, including AOOs

- GDC 11, “Reactor Inherent Protection,” requiring a net negative prompt feedback coefficient in the power operating range

- GDC 12, “Suppression of Reactor Power Oscillations,” requiring that power oscillations that can result in conditions exceeding SAFDLs not be possible or be reliably and readily detected and suppressed

- GDC 13, “Instrumentation and Control,” requiring a control and monitoring system to monitor variables and systems over their anticipated ranges for normal operation, AOOs, and accident conditions

- GDC 20, “Protection System Functions,” requiring, in part, a protection system that automatically initiates a rapid control rod insertion to ensure that SAFDLs are not exceeded as a result of AOOs

- GDC 25, “Protection System Requirements for Reactivity Control Malfunctions,” requiring protection systems designed to ensure that SAFDLs are not exceeded for any single malfunction of the reactivity control systems

- GDC 26, “Reactivity Control System Redundancy and Capability,” requiring, in part, a two independent reactivity control systems of different design principles that are capable of holding the reactor subcritical under cold conditions

- GDC 27, “Combined Reactivity Control Systems Capability,” requiring, in part, a control system designed to control reactivity changes during accident conditions in conjunction with poison addition by the ECCS

- GDC 28, “Reactivity Limits,” requiring, in part, that the reactivity control systems be designed to limit reactivity accidents so that the reactor coolant system boundary is not damaged beyond limited local yielding

AREVA performs steady-state calculations using the nuclear design methods to demonstrate compliance with several of the GDC specified in SRP Section 4.3. The staff reviewed the CASMO-4/MICROBURN-B2 methods used to perform these steady-state calculations for evaluating compliance with the relevant GDC.

This section of the survey deals specifically with steady-state calculations. Therefore, this section does not address all of the nuclear design GDC.

Compliance with GDC 10 and 20 is demonstrated by performing transient evaluations to ensure that SAFDLs are not exceeded as a result of AOOs. Steady-state calculations are also performed to demonstrate that normal operation does not result in the SAFDLs being exceeded; however, transient conditions are generally most limiting in terms of the relevant SAFDLs. Section 7.2 of this survey addresses these calculations.

Compliance with GDC 12 is demonstrated by performing stability analyses. Section 7.3 of this survey addresses these calculations.

Compliance with GDC 28 is demonstrated by analysis of the consequences of a postulated control rod drop accident (CRDA), which is also a reactivity initiated accident (RIA). Section 7.4.2 of this survey addresses these calculations.

7.1.2.1 Inherent Negative Reactivity Feedback

To demonstrate compliance with the requirements of GDC 11, calculations are performed to determine the magnitude and nature of the reactivity feedback coefficients. These include the Doppler, moderator temperature, and void reactivity coefficients. These calculations are performed to demonstrate that the reactivity coefficients ensure inherent negative feedback.

The void reactivity coefficient is the strongest contributor to the power reactivity coefficient for BWRs. The void reactivity coefficient is generally orders of magnitude stronger than either the Doppler coefficient or moderator temperature coefficient. Additionally, the void reactivity coefficient is generally insensitive to the fuel temperature because of the strong influence of the water density on the neutron spectrum. Therefore, while the calculation of the fuel temperature may impact the calculated Doppler reactivity coefficient, compliance with this GDC is generally demonstrated by calculating the magnitude of the much stronger, negative void reactivity coefficient. Therefore, the staff considers the use of legacy methods to demonstrate compliance with GDC 11 to be acceptable.

7.1.2.2 Shutdown Margin

GDC 25 requires that the reactivity control system be capable of maintaining the reactor in a subcritical condition, assuming a single malfunction of the system. GDC 26 requires a secondary control system capable of shutting down the reactor. GDC 27 requires that these combined systems have sufficient capability to shut down the core under accident conditions. Several MICROBURN-B2 eigenvalue calculations demonstrate compliance with GDC 25, 26, and 27. The purpose of these calculations is to demonstrate sufficient capability of the reactivity control systems to ensure shutdown.

The calculations performed to demonstrate compliance with these GDC are cold shutdown margin calculations. CASMO-4/MICROBURN-B2 methods are used to determine the core eigenvalue under various control states (e.g., all rods in, all rods except the strongest rod in, or borated conditions). As the core reactivity increases with decreasing temperature and increased water density, these calculations are performed at limiting cold conditions. Therefore, the model used to determine the fuel temperature at power conditions is not necessary to assess the cold shutdown margin. Thus, the staff finds that the fuel thermal conductivity model does not affect the calculations used to demonstrate compliance with these GDC. Consequently, the staff finds the use of legacy methods to perform these calculations to be acceptable.

### 7.1.3 Conclusions Regarding Steady-State Calculations

The staff has reviewed the nature of the AREVA safety analysis methodology and the use of the RODEX codes to calculate steady-state figures of merit for comparison against applicable steady-state criteria.

Three thermal-mechanical criteria were evaluated: rod internal pressure, fuel centerline temperature, and cladding strain. The staff found that the rod internal pressure calculations performed specifically using the RODEX2A code are acceptable despite biases in the prediction of the fuel conductivity with exposure. However, this conclusion may not be applicable to equivalent analyses performed using RODEX2. In terms of the fuel centerline temperature analysis, the staff finds that the impact of biases in the fuel thermal conductivity model in the legacy codes results in biases in the prediction of margin to the CFM. For cladding strain, the nonconservatism in the legacy code RODEX2A has been determined to be approximately **[ ]** percent at the typically limiting exposure point.

The staff also evaluated the steady state calculations performed to assess compliance with nuclear criteria. In particular the staff found that the use of legacy methods to assess inherent negative reactivity feedback and shutdown margin was acceptable.

## 7.2 Transients

Transients refer to those analyses performed to assess the impact of AOOs, as well as analyses performed to demonstrate compliance with overpressure criteria, particularly the American Society of Mechanical Engineers (ASME) overpressure and ATWS overpressure criteria. ATWS overpressure refers to a specific transient analysis in which scram is not modeled; however, the transient analysis is performed for the period of time before boration.

These calculations are performed to determine the impact of transient conditions on thermal margin and are used to establish operating limits such that AOOs do not challenge fuel rod

integrity. The analysis codes used to do these calculations include CASMO-4, MICROBURN-B2, RODEX2, COTRANSA2, XCOBRA, and XCOBRA-T.

### 7.2.1 Reload Safety Analysis Insights

AOOs involving the entire core and the recirculation system are evaluated at full power and flow conditions to determine the nominal MCPR limit. The limiting transient event (or events) is evaluated using the plant transient methodology embodied by COTRANSA2 and XCOBRA-T.

The evaluation of AOOS at rated conditions considers events in the following classifications:

- rapid vessel pressurization
- decrease in recirculation flow rate
- increase in recirculation flow rate
- decrease in core inlet subcooling
- increase in core inlet subcooling
- decrease in vessel coolant inventory
- increase in vessel coolant inventory
- combination events

Events under the classifications of decrease in vessel coolant inventory, decrease in recirculation flow rate, and decrease in core inlet subcooling are inherently self-limiting by virtue of the physical phenomena governing the event. Thus, these events need not be analyzed. Events under the classifications of rapid vessel pressurization, increase in recirculation flow rate, and increase in core inlet subcooling are potentially limiting events. Events in the categories of increase in vessel coolant inventory and combination events are evaluated on a generic basis for each major BWR plant type (Reference 19).

The following cycle-specific transient events are generally evaluated as part of reload licensing evaluations using COTRANSA2 and XCOBRA-T (References 17 and 22):

- load rejection without bypass
- turbine trip without bypass
- feedwater controller failure
- steam isolation valve closure without direct scram (ASME overpressure)
- loss of feedwater heating or inadvertent HPCI actuation
- flow increase transients from low power and low flow operation

### 7.2.2 Critical Power Criterion

GDC 10 requires that SAFDLs are not exceeded during any condition of normal operation, including the effects of AOOs. To demonstrate compliance with GDC 10, CPR safety and operating limits are established to preclude fuel cladding failure as a result of boiling transition.

Transient calculations are performed in the safety analysis to demonstrate margin to boiling transition. For these calculations, the figure of merit is the change in CPR (ΔCPR). The ΔCPR is calculated using the transient code suite described in Figure 1. The steady-state calculations provide initial conditions and feedback parameters to the COTRANSA2 systems analysis code, which in turn, provides boundary conditions to the XCOBRA-T analysis code. XCOBRA-T includes correlations for the CHF that allow the prediction of the transient bundle CPR. The

ΔCPR, specifically, is defined by adjusting the initial hot bundle power until the MCPR encountered during the transient is unity. The difference between the initial CPR of the hot bundle and unity is defined as the transient ΔCPR.

The effect of fuel thermal conductivity degradation with exposure has a competing effect when considered in the calculation of the transient CPR. First, biases in the overall fuel thermal time constant affects the prediction of the corewide power response, as well as having an effect on the calculation of the local LHGR in the limiting bundle. The effects can be discussed as the global effect (core power response) and the local effect (local LHGR). The currently approved analysis codes, COTRANSA2 and XCOBRA-T, do not consider fuel thermal conductivity degradation with exposure.

COTRANSA2 is used to calculate the system performance under transient conditions and provides total core power response and appropriate system boundary conditions to XCOBRA-T. XCOBRA-T is used to calculate the CPR response for particular bundles to determine the limiting transient CPR. Since the calculation is divided into these two stages, the competing effect of biases in the thermal time constant may be treated separately for the global (COTRANSA2) analysis and the local (XCOBRA-T) analysis.

It is conservative to treat the fuel thermal time constant at the local level to be biased low. This has the effect of increasing the transient cladding heat flux as power deposited in the fuel pellet during the AOO power increase is more rapidly delivered to the coolant, thereby increasing the peak cladding heat flux and providing a more limiting condition in terms of assessing the margin to the CHF. When fuel thermal conductivity degradation is not considered, the fuel heat resistance is biased in the low direction; consequently, the analysis assumes an artificially low biased thermal time constant. Therefore, the staff agrees with the assertion in the BWR white paper (Reference 42) that the XCOBRA-T calculations will remain conservative without taking into account the fuel thermal conductivity degradation with exposure.

The COTRANSA2 calculation, however, may be adversely impacted by biases in the fuel thermal conductivity. When the fuel thermal time constant is biased low, heat deposited in the pellet is more rapidly released from the pellet and delivered to the coolant. Under pressurization conditions (typically the limiting AOO events are pressurization events; however, this is determined on a plant- and cycle-specific basis), more rapid heat transfer between the pellet and cladding will serve to dampen the core power response, since, during the pressurization, enhanced heat conduction serves to more rapidly generate void in the core and provide a more prompt negative reactivity feedback to reduce the height and width of a power pulse in response to the pressurization event. Together, this reduces the value of the integral thermal power deposited to the fuel during the event. Therefore, the impact of a fuel thermal conductivity bias is likely to be nonconservative for COTRANSA2.

The BWR white paper argues that COTRANSA2 contains numerous conservative assumptions. In particular, the integral thermal power is increased using a conservative 110-percent integral thermal power multiplier to ensure that the results of COTRANSA2 calculations are conservative relative to the qualification database (Peach Bottom turbine trip tests). The combination of the conservatism inherent in the methodology and the 110-percent multiplier result results in a substantial—nearly 130 percent—degree of conservatism in the predicted thermal power response on average.

Therefore, biases in the thermal conductivity model contribute to competing effects in the overall analysis method. To better assess the integral effect of the thermal conductivity, calculations were performed using the developmental AURORA-B code. AURORA-B, while not approved by the NRC, is built from previous NRC-approved methods. These methods include RODEX4, MICROBURN-B2, and S-RELAP5. Therefore, the staff accepts the use of this code to perform sensitivity calculations for the current purpose. The AURORA-B sensitivity studies show that the overall effect of the treatment of fuel thermal conductivity degradation with exposure results in changes in the ΔCPR of 0.4 percent and the LHGR of 0.5 percent. The biases that would be introduced into the analysis figures of merit with or without the treatment of fuel thermal conductivity degradation with exposure have been demonstrated to be negligible. The staff finds that this result is not altogether unexpected given the nature of the competing effects present in the transient system and core analyses. Therefore, the staff concludes that the continued use of these legacy methods (COTRANSA2 and XCOBRA-T) to assess transient critical power margin is acceptable.

### 7.2.3 Thermal-Mechanical Criteria

GDC 10 requires that SAFDLs are not exceeded during any condition of normal operation. To demonstrate compliance with GDC 10, fuel rod T-M design limits are established to ensure fuel rod integrity in its core lifetime along the licensed power/flow domain during normal steady-state operation and in the event of an AOO. The fuel T-M design criteria requires, in part, that, while the LHGR limits for a given fuel product are not cycle specific, the power- and flow-dependent LHGR multipliers are established each cycle since they are affected by the core response during a transient. The cycle-specific core operating limits report documents the LHGR operating limits and the power- and flow-dependent multipliers.

#### 7.2.3.1 Thermal Overpower

The steady-state LHGR limit is established on the basis that increasing the LHGR to the steady-state maximum LHGR allowed by the RPS without an ensuing scram does not result in incipient centerline melting. It is postulated that steady operation at the scram setpoint represents the most limiting condition in terms of fuel centerline melting under all transient conditions in which the RPS is assumed to function (Reference 19).

Because RODEX2 steady-state calculations treat transient thermal overpower conditions conservatively, considering the average power range monitor (APRM) trip setpoints, the steady-state LHGR limits inherently protect against fuel centerline melt resulting from AOOs.

However, cycle-specific analyses may be performed to determine the limiting increase in peak heat flux during the limiting transient events. This overpower may also be utilized, instead of the APRM setpoint, to determine the margin to fuel centerline melt during AOOs by combining the increase in LHGR associated with the limiting transient with the LHGR operating limit and evaluating the resultant fuel temperature using RODEX2.

The BWR white paper sensitivity analyses (Reference 42) considered the effect of AOOs. To address CFM during AOOs, AREVA employs the protection against power transients (PAPT) approach. In the PAPT approach, a margin to relevant limits must be demonstrated for a **[ ]** overpower condition. The calculations of transient fuel centerline temperature were performed using RODEX2A and compared against revised CFM limits. The CFM limits were adjusted to reflect nonconservatism in the prediction of the centerline temperature. The calculations performed demonstrate that adequate margin to these revised limits exists.

The staff notes that AREVA has quantified the nonconservatism of the continued use of the legacy thermal conductivity model, which it has acceptably applied to determine more conservative acceptance criteria that address the nonconservatism. The effect of burnup degradation on fuel temperature prediction scales essentially linearly with exposure and with increasing LHGR.

Figures 3.4 and 3.7 of the BWR white paper, while demonstrating that the CFM limits are still met once the biases in fuel temperature are taken into account using the RODEX2A code, show significant reduction in the analysis margin. This minimum margin tends to occur relatively early in exposure (at approximately 10 MWD/kgU), where the bias in the temperature calculations are small. However, these biases do represent a significant change in the available margin on a relative basis. The margins to CFM tend to increase with exposure as the LHGR fuel design limit decreases with exposure above 19 MWD/kgU.

7.2.3.2 Mechanical Overpower

The RAMPEX code is used to determine cladding transient strain. The RODEX2 output at a particular exposure serves as the input for each RAMPEX case. This RAMPEX input includes gas release, fuel densification, fuel swelling, and the fuel relocation caused by pellet cracking, all of which depend on the prior fuel operating history (Reference 23).

When using RODEX2 to supply analysis input for RAMPEX for transient stress and strain analysis, Table 1 from Reference 21, states that the power history assumed in the RODEX2 calculations must consider the history for the maximum power change. This specification specifically mentions maneuvering and conditioning criteria. However, in practice, cycle-specific calculations may be performed by employing the RAMPEX code and using the LHGR design limit for a particular fuel design with the cycle-specific limiting increase in relative peak heat flux predicted by a systems analysis code, such as the coupled COTRANSA2/XCOBRA-T calculations for thermal margin. The RAMPEX code is then used to compute the transient stress and strain on the cladding resulting from a power ramp consistent with the limiting LHGR increase associated with the limiting transient analysis. The results are compared against the applicable criteria in SRP Section 4.2, specifically, the 1 percent strain limit.

AOO strain calculations were performed for normal and gadolinia bearing rods and demonstrate that the predicted strain using the legacy methods may be as high as **[ ]** (Reference 42). These calculations were performed using the RODEX2A code with a standard PAPT factor of **[ ]** percent). When the calculated bias is applied at the limiting exposure (20 MWD/kgU), the margin to the acceptance criterion is very small, approximately **[ ]** percent. Given the significance of the analysis bias (**[ ]** percent) relative to typical strain margins (**[ ]** percent) at the limiting exposure point, the staff concludes that continued reliance on the RODEX legacy T-M analysis methods does not provide reliable quantification of margin to the acceptance criteria.

### 7.2.4 Overpressure Criteria

GDC 14 requires that the reactor coolant pressure boundary be designed, fabricated, erected, and tested so as to have an extremely low probability of abnormal leakage, of rapidly propagating failure, and of gross rupture. To demonstrate compliance with GDC 14, transient calculations are performed to ensure that the vessel meets ASME pressure limits.

These analyses include ATWS and ASME overpressure analyses. These calculations are very similar to pressurization AOO analyses.

An overpressure analysis is performed to ensure that the vessel pressure requirements of the ASME Code are satisfied. COTRANSA2 calculations are performed for a postulated MSIV closure event with a failure of the MSIV position switch scram signal, which is considered a limiting active component failure. The MSIV with failure of direct scram results in a severe vessel pressurization relative to AOO pressurization events. This analysis is referred to as the ASME overpressure evaluation and is performed on a cycle-specific basis to demonstrate compliance with GDC 14.

The ATWS overpressure analysis is performed using COTRANSA2, however, the analysis assumes a common-mode failure of the RPS such that the pressurization is not mitigated by a scram. This is the only ATWS event for which the NRC has accepted the use of the COTRANSA2 code for analysis.

The BWR white paper describes sensitivity calculations that were performed using COTRANSA2 and AURORA-B to determine the sensitivity of the peak vessel pressure to the thermal conductivity (Reference 42). In the first analysis, AURORA-B was used with and without the thermal conductivity degradation model active. The calculated vessel pressure increase (peak pressure minus initial pressure) was shown to increase by approximately 0.8 percent. A secondary sensitivity analysis was performed using COTRANSA2. COTRANSA2 is a one-dimensional code system; therefore, only the average fuel rod is considered. In these calculations, the thermal conductivity was reduced by 30 percent to conservatively estimate the effects of conductivity degradation. The results of the COTRANSA2 calculations indicate a nonconservatism in the predicted pressure increase of 1.25 percent.

The magnitude of the peak pressure increase bias introduced by the bias in the fuel thermal conductivity appears small (approximately 1 percent). However, the staff notes that the margin to the ASME overpressure limits is generally small. The staff has reviewed recent EPU applications in which the margin to the ASME overpressure limit has been small and noted other sources of bias in the calculation of the peak vessel pressure. These include the effect of biases in the void quality correlation (an impact of approximately 7 psi) and biases in the calculated Doppler reactivity worth (an impact of approximately 3 psi) (Reference 38). When considered with this 1 percent, which the same estimates to be approximately 3 psi, the integral summation may show that plants have minimal margin to the ASME overpressure limit under EPU conditions or other limiting conditions allowable by technical specifications on a plant-specific basis, such as SRV out-of-service allowances or increased core flow operating domains.

Therefore, the staff cannot reach a safety determination regarding the AREVA transient overpressure analysis methods without the following information:

- A comprehensive list of the identified nonconservative biases in the AREVA overpressure analysis methods, and
- Verification that the nonconservative biases are considered in an integral sense in the safety analyses.

### 7.2.5 Conclusions Regarding Transients

The staff has reviewed the impact of fuel thermal conductivity degradation on the analysis of critical power transients, thermal overpower transients, mechanical overpower transients, and overpressure transients. The staff has determined that, because of competing effects, the specific modeling of the fuel thermal conductivity over the variation experienced during normal discharge exposures results in negligible effects on the analysis of critical power transients.

In the space of thermal and mechanical overpower transients, the staff has found that calculations demonstrate nonconservatism in the current analysis methods. While consideration of these nonconservatisms has shown that acceptance criteria are still satisfied, the staff finds that the methods used to perform these calculations do not provide reliable quantification of margin available to the acceptance criteria.

In the overpressure analyses, the staff reviewed the calculation of the sensitivity of the results to the thermal conductivity degradation. These calculations have quantified the impact (approximately 1 percent). Nominally, this appears to be a negligible nonconservatism. However, when considered with other identified nonconservatisms in the ASME overpressure analysis, it becomes significant relative to the available margin to the ASME limits. Therefore, the use of the legacy codes to demonstrate compliance with the ASME limits does not provide reliable quantification of the available margin to the acceptance criteria.

## 7.3 Stability

GDC 12 requires that the reactor design ensures that power oscillations that may result in the fuel exceeding SAFDLs are not possible or can be readily detected and suppressed. GDC 10 requires that the fuel does not exceed SAFDLs. Demonstration of compliance with these GDC may require various analyses.

The analyses are either decay ratio calculations (performed with STAIF) or DIVOM ($\Delta$CPR per initial CPR versus oscillation magnitude) calculations (performed with RAMONA5-FA). These calculations are highly sensitive to the fuel thermal time constant because of the coupling effect of the neutronic power to the fluid response. These codes, however, incorporate models that directly account for the fuel thermal conductivity degradation with burnup. The staff has previously reviewed and approved these codes to perform the relevant stability calculations. Because these codes already capture the effect of fuel thermal conductivity degradation with exposure, the staff has not considered these codes as part of its AREVA BWR methods survey.

## 7.4 Design-Basis Accidents

The staff's survey of AREVA methods considered two design-basis accidents. The first is an ECCS LOCA and the second is an RIA. To analyze postulated LOCA events, AREVA uses the EXEM methodology.

### 7.4.1 Loss-of-Coolant-Accident

#### 7.4.1.1 Regulatory Criteria

As specified in 10 CFR 50.46, the following acceptance criteria apply to ECCS-LOCA evaluations: (1) the peak cladding temperature (PCT) remains below 2200 °F, (2) the maximum

oxide thickness does not exceed 17 percent of the cladding thickness anywhere in the core, (3) the total hydrogen formed does not exceed 1 percent of the hypothetical amount if the entire cladding inventory (excluding plena) were reacted, (4) the core retains a coolable geometry, and (5) long-term cooling is maintained. For the operating reactor fleet, GESTR/SAFER analyses are performed to calculate the PCT, oxide thickness, and core volume oxidized.

7.4.1.2 Large Break Loss-of-Coolant-Accident

The BWR white paper discusses the effect of fuel thermal conductivity degradation on LOCA analysis (Reference 42). The BWR white paper states that the limiting fuel bundles in terms of PCT and metal-water reaction are fresh fuel bundles and are therefore insensitive to changes in fuel thermal conductivity with exposure. However, the effect of degradation may result in other conditions becoming more limiting for partially exposed fuel bundles. To this end, AREVA considered the two phases of LOCA and the potential impact of fuel thermal conductivity degradation.

In the blowdown phase, according to the BWR white paper, good cooling exists and is sufficient to remove the initial stored energy from the core without challenging the PCT. While this may true in the case of a small-break loss-of-coolant accident (SBLOCA), the potential exists to enter the conditions of boiling transition during the blowdown phase of a LOCA. Under these dryout conditions, the PCT response is expected to be a function of the initial stored energy. The initial stored energy, in turn, is expected to be greater the smaller the fuel thermal conductivity because, at normal operating conditions, the fuel temperature must be higher to drive the same steady-state LHGR. AREVA has calculated the exposure and LHGR-dependent fuel temperature bias, which is provided in Figure 3.6 of the white paper. However, the method appears to ignore the potential for boiling transition during blowdown. Therefore, the staff cannot conclude that the discussion is complete in terms of assessing the impact of fuel thermal conductivity degradation on PCT.

It is general practice to perform bounding ECCS-LOCA analyses to simplify the cycle-specific safety analysis process. These analyses are initialized such that the limiting bundle attains a critical power ratio that is at or below the operating limit. A judicious selection of the initial MCPR for LOCA analysis that is below a typical operating limit, yet is high enough to preclude the analyzed bundle from entering dryout may be selected on a plant-specific basis. For BWR/6 plants, the OLMCPR is generally low due to rapid SCRAM. Additionally, advanced ECCS design features of newer BWR plant designs mitigate the cladding temperature rise during the refill LOCA phase. The BWR white paper does not address the potentiality for early boiling transition during blowdown.

The NRC staff is concerned that the occurrence of boiling transition during the early stages of LOCA (flow coast down/blow down) may be sensitive to the initial stored energy. As heat transfer is greatly impaired by BT, the longer term response may be sensitive due to heat holdup during this stage of LOCA. For BWR plants where the plants are potentially limited by early peak PCT, the white paper analysis would not apply. Since the longer term PCT may be sensitive to the holdup of heat during the BT period during blowdown, the staff requires the following information to make a safety determination regarding the AREVA BWR LOCA analysis methods:

- A detailed explanation of the source of the heat transfer coefficients utilized in the HUXY calculation,

- A description of how LOCA analyses are initialized in terms of power distribution; specifically, how thermal limits (such as MLHGR or OLMCPR) are considered in the initialization, and
- A characterization of the PCT sensitivity to fuel conductivity for plants where early boiling transition is predicted to occur during the early stages of LOCA.

The white paper also considers the refill/reflood phase of a LOCA. The white paper presents the results of sensitivity studies performed using HUXY with modified input parameters that were calculated based on RODEX4 calculations. The results of these analyses demonstrated a very small effect on the calculated PCT during refill/reflood. These results indicate changes in the PCT between 1 and 4 °F. However, these calculations were performed at 15 MWD/kgU to exacerbate the effect of the conductivity degradation while maintaining a high average planar LHGR (APLHGR), as given by the APLHGR limit.

Another sensitivity calculation was performed for a plant with a limiting PCT that occurred at a higher exposure. This calculation was performed at the limiting exposure point, and the PCT was increased by 18 °F when the adjusted input parameters were used in HUXY.

The staff notes that PCT sensitivities of this magnitude are not considered significant. The staff's criterion for significance is 50 °F, as provided in 10 CFR 50.46. However, the staff notes that licensees must track errors of any magnitude for annual reporting, in accordance with the 10 CFR 50.46 requirements for LOCA evaluation models.

#### 7.4.1.3 Small-Break Loss-of-Coolant Accident

For SBLOCA evaluations, the core remains cooled during the blowdown phase because the inventory loss during this phase is small. Therefore, the PCT is expected to occur late in the LOCA transient once core uncovery occurs (i.e., under SBLOCA conditions, early dryout of the fuel bundles is not expected to occur). The long-term behavior of SBLOCA calculations tends to match large-break loss-of-coolant accident (LBLOCA) calculations following actuation of the automatic depressurization system. Therefore, conclusions drawn from the previously mentioned calculations would apply to SBLOCA evaluations.

#### 7.4.1.4 Conclusions Regarding the Design-Basis Loss-of-Coolant Accident

The staff concludes that predictions of PCT following core uncovery using the EXEM-2000 methodology are unlikely to be significantly impacted by the effect of fuel thermal conductivity degradation with exposure. This is because the primary variable that the conductivity affects is the initial stored energy in the core, which is largely removed during the blowdown stage of the LOCA. However, in particular cases in which the limiting bundles in the core are, in terms of predicted PCT, exposed bundles (as opposed to fresh bundles), the PCT impact may still be substantial. The results calculated by AREVA have indicated a case in which the PCT would increase by 18 °F.

However, RELAX does not appear to calculate the onset of boiling transition during the early stages of a LOCA. During the blowdown stage, the critical power response of the bundles is likely to be a stronger function of the initial stored energy. Therefore, the sensitivity calculations performed by AREVA do not fully address the potential that exposed bundles may be the LOCA limited bundles, if the LOCA analyses considered the effect of stored energy on early boiling transition. Therefore, the staff cannot conclude that the AREVA BWR white paper fully

demonstrates that the LOCA PCT analysis sensitivity to the fuel thermal conductivity degradation is below the significance threshold of 50 °F.

### 7.4.2 Reactivity Initiated Accident

The design-basis RIA for a BWR is a CRDA, in which it is postulated that, during any point in the operation of the reactor, a control blade becomes stuck in the fully inserted position and becomes decoupled from the associated drive mechanism. At a later point in time, the drive is withdrawn leaving the control blade in the fully inserted position. An RIA occurs when the control blade is postulated to become free and drop to the position of the decoupled drive. Analysis of the CRDA must consider all possible control rod configurations and operating conditions to determine the consequences from a limiting control blade drop.

Typically, the consequences of a CRDA are greatest under cold zero-power conditions. Under these conditions, the control blade incremental worth is highest, the core is loosely coupled, and the RPV inventory is predominantly liquid water, which is potentially subcooled such that moderator voiding does not contribute negative reactivity feedback.

The control rod drop occurs when the dropped rod falls to the last position of the drive mechanism at a rate determined by the design of the velocity limiter at the bottom of the blade. When a control rod drops under cold conditions, the local power around the control rod increases rapidly and dramatically—typically on the order of a decade every 25 milliseconds. The rapid power increase results in an increase in the fuel temperature, which results in a negative reactivity addition due to the Doppler effect. The Doppler reactivity limits the peak transient power, and the event is terminated by a 120-percent APRM scram.

During the CRDA, the potential exists for the local power to increase substantially and result in the formation of voids around the fuel pins in nucleation locations. The formation of these voids, while generally not credited in CRDA analyses, provides additional negative reactivity feedback to help limit the peak and integrated local power before the scram.

The power increase from the reactivity addition is terminated by prompt negative feedback from the Doppler effect and the heatup of the fuel surrounding the dropped blade. The nuclear dynamic response and the thermal-hydraulic models are used to determine the energy deposition in the fuel during the power increase in the early phase of the transient and through the termination after scram. These values are then compared to the fuel enthalpy limits provided in SRP Section 4.2.

The limiting CRDA is determined on a plant-specific basis considering the particular plant hardware and technical specifications. For banked position withdrawal sequence (BPWS) plants, the rod worth minimizer (RWM) issues rod blocks to limit the incremental reactivity worth of any potential dropped rod. Additionally, the analysis must account for the minimum scram times based on the allowable limits provided in the plant technical specifications.

In determining the limiting control rod, consideration is given to the maximum rod worth based on achievable rod motion deviations from the BPWS allowed by the technical specifications, plant hardware (including the ability to bypass rod blocks issued by the RWM), and the worst single failure or operator error.

The staff identified the CRDA as being potentially sensitive to the error in the fuel thermal conductivity because of the sensitivity of the power increase to the magnitude of the Doppler

reactivity coefficient and, possibly, the sensitivity of the analysis to the heat conduction from the fuel pellet to the surrounding coolant.

#### 7.4.2.1 Regulatory Criteria

GDC 28 is the applicable regulatory criterion for CRDA. GDC 28 requires, in part, that the reactivity control systems be designed to limit reactivity accidents so that the reactor coolant system boundary is not damaged beyond limited local yielding.

Compliance with GDC 28 is demonstrated by performing CRDA analyses for limiting control blades to ensure that the fuel integrity is not challenged by the worst possible CRDA. Specifically, compliance is demonstrated by analyzing the consequences of the CRDA and comparing the fuel enthalpy rise against the criteria for the cladding failure, specific energy design, and prompt fuel dispersal enthalpy limits.

#### 7.4.2.2 Analysis Methodology

Reference 18 discusses the analysis of the postulated CRDA on a generic basis. Because the behavior of the fuel and core during such an event is not dependent upon system response, a single generic CRDA analysis can be applied to all BWR types. The applicability of the generic CRDA analysis is verified for each application.

The results of the generic CRDA analysis consist of deposited fuel enthalpy values parameterized as a function of effective delayed neutron fraction, Doppler coefficient, maximum (dropped) control rod worth, and four-bundle local peaking factor. Each application of the generic analysis includes the values for each of the parameters and the resulting deposited fuel enthalpy. These parameters are all nuclear parameters generated by the core simulator, MICROBURN-B2.

This generic CRDA is analyzed with a one-group, time-space neutron diffusion theory calculation in (r-z) geometry using the COTRAN (predecessor to COTRANSA2) program to account for fuel temperature (Doppler) feedback. The cross sections are calculated using XTGBWR (predecessor to MICROBURN-B2); the accident may be terminated assuming a scram. At first, the cross sections are input and the initial control rod pattern (including exposure and void history effects) is calculated. Temperature distribution for the Doppler feedback is derived from XFYRE (predecessor to CASMO-4) and used to model the feedback for the rod drop accident. The core is divided into three radial zones—one for the central dropped rod (four-element module) and two outer zones for the partially controlled regions of the scram rods. The control fractions of the outer regions are varied to obtain different control rod worths and an eigenvalue of unity with a fully controlled central region. The reactivity input curve for the central control rod is calculated with COTRAN from a series of static calculations at different insertion lengths. The peaking factors (axial and radial) are then determined for a fully withdrawn central rod and variable rod worth.

Adiabatic boundary conditions are assumed at the fuel pellet-gap interface (i.e., no heat transfer to the coolant is allowed, which is a conservative assumption). The rod drop analysis is performed for a spectrum of startup conditions with respect to coolant temperature, core size, composition, and exposure. Scram is assumed when the power reaches the scram level. The total transient time is about 6 seconds. The maximum fuel enthalpy is calculated from the peaking factors for each transient. The maximum reactor pressure is calculated from the total energy generated during the transient.

#### 7.4.2.3 Conclusions Regarding Reactivity Initiated Accidents

The staff has found that the treatment of the effect of thermal conduction within the fuel is not required to analyze hypothetical CRDA events for BWRs. Additionally, the adiabatic approach to these licensing evaluations is conservative. On these bases, the staff finds the continued application of this methodology acceptable.

### 7.5 Beyond Design-Basis Accidents

For the most part, beyond design-basis accidents, including ATWS and SBO, are not analyzed using AREVA computational methods. One exception is the analysis of the ATWS overpressure transient that is analyzed with COTRANSA2. The staff, however, provided a separate discussion of this particular event in Section 7.2 of this report.

The staff reviews, on a case-by-case basis, license amendment requests or licensing evaluations supplied by AREVA that address beyond design-basis accidents. Historically, AREVA has taken a variety of approaches to justifying compliance with regulatory criteria for ATWS and SBO on a plant-specific basis. Therefore, this survey does not consider any ramifications of the AREVA-specific fuel rod thermal conductivity modeling approach on the results of beyond design-basis event analyses.

## 8 SUMMARY OF CONCLUSIONS

At the conclusion of the staff survey of the AREVA BWR safety analysis methods, the staff determined that the information was insufficient to reach a quantitative safety determination in terms of the impact of the fuel thermal conductivity bias on all of the different safety analyses. To this end, the staff has identified the type of information that would be required for the staff to reach a conclusion on the matter. Two cases were identified, in particular, overpressure transients and LOCA.

The staff cannot reach a safety determination regarding the AREVA transient overpressure analysis methods without the following information:

- A comprehensive list of the identified nonconservative biases in the AREVA overpressure analysis methods, and
- Verification that the nonconservative biases are considered in an integral sense in the safety analyses.

The staff requires the following information to make a safety determination regarding the AREVA BWR LOCA analysis methods:

- A detailed explanation of the source of the heat transfer coefficients utilized in the HUXY calculation,
- A description of how LOCA analyses are initialized in terms of power distribution; specifically, how thermal limits (such as MLHGR or OLMCPR) are considered in the initialization, and
- A characterization of the PCT sensitivity to fuel conductivity for plants where early boiling transition is predicted to occur during the early stages of LOCA.

In either of these cases, the staff expects that correction of biases in the thermal conductivity modeling would yield analytical results that show degraded margins to safety limits.

## 9 References


1. ANF-1125(P)(A), “ANFB Critical Power Correlation,” Advanced Nuclear Fuels, April 1990 (Agencywide Document Access and Management System (ADAMS) Accession No. ML081690764).

2. ANF-91-048(P)(A), “Advanced Nuclear Fuels Corporation Methodology for Boiling Water Reactors EXEM BWR Evaluation Model,” Advanced Nuclear Fuels, January 1993 (ADAMS Accession No. ML0813402180).

3. ANF-913(P)(A), Rev. 1, “COTRANSA2: A Computer Program for Boiling Water Reactor Transient Analyses,” Vol. 1, Supplements 2, 3, and 4, Advanced Nuclear Fuels, Corporation August 1990 (ADAMS Accession Nos. ML0813402290, ML0813402230, ML0813402240, ML0813402270, ML0813402280).

4. ANP-2638(P), Revision 0, “Applicability of AREVA BWR Methods to Extended Power Uprate Conditions,” AREVA NP, July 2007 (ADAMS Accession No. ML072180378 (proprietary)).

5. BAW-10247(P)(A), Revision 0, “Realistic Thermal-Mechanical Fuel Rod Methodology for Boiling Water Reactors,” AREVA NP, May 2008 (ADAMS Accession No. ML081340220).

6. BAW-10255(P)(A), Revision 2, “Cycle-Specific DIVOM Methodology Using the RAMONA5-FA Code,” Framatome ANP, May 2008 (ADAMS Accession No. ML082820002).

7. EMF-1833(P), Revision 2, “MICROBURN-B2: Steady State BWR Core Physics Method,” Siemens Power Corporation, September 1998 (ADAMS Accession No. ML072980096 (proprietary)).

8. EMF-1997(P), “ANFB-10 Critical Power Correlation,” Siemens Power Corporation, October 1997.

9. EMF-2157(P), Revision 0, “Boiling Water Reactor Licensing Methodology Compendium,” Siemens Power Corporation, December 1999.

10. EMF-2158(P)(A), Revision 0, “Siemens Power Corporation Methodology for Boiling Water Reactors: Evaluation and Validation of CASMO 4/MICROBURN-B2,” Siemens Power Corporation, October 1999.

11. XN-CC-33(A), Revision 1, “HUXY: A Generalized Multirod Heatup Code with 10CFR50 Appendix K Heatup Option User’s Manual,” Exxon Nuclear Company, December 1975.

12. ANF-CC-33(P), Supplement 2, “HUXY: A Generalized Multirod Heatup Code with 10 CFR 50 Appendix K Heatup Option,” Advanced Nuclear Fuels, December 1990.

13. EMF-2361(P)(A), Revision 0, “EXEM BWR-2000 ECCS Evaluation Model,” Framatome ANP, May 2001 (ADAMS Accession No. ML0120504505).

14. EMF-2982(P), Revision 0, “Browns Ferry Units 2 and 3 Safety Analysis Report for Extended Power Uprate ATRIUM-10 Fuel Supplement,” Framatome ANP, June 2004 (ADAMS Accession No. ML0418404170).

15. Final Safety Evaluation, Topical Report (TR) BAW-10255(P), Rev. 2, “A Cycle Specific DIVOM Methodology Using the RAMONA5-FA Code,” Office of Nuclear Reactor Regulation, U.S. Nuclear Regulation Commission (ADAMS Accession No. ML0814100942).

16. STUDSVIK/SOA-95/2, “CASMO-4, A Fuel Assembly Burnup Program Methodology,” Studsvik Proprietary, September 1995 (ADAMS Accession No. ML072980097 (proprietary)).

17. XN-NF-80-19(P)(A), Revision 2, “Exxon Nuclear Methodology for Boiling Water Reactors THERMEX: Thermal Limits Methodology Summary Description,” Volume 3, Exxon Nuclear Company, January 1987 (ADAMS Accession No. ML0813403050).

18. XN-NF-80-19(P)(A), “Exxon Nuclear Methodology for Boiling Water Reactors Neutronic Methods for Design and Analysis,” Volume 1, Exxon Nuclear Company, March 1983 (ADAMS Accession No. ML081850204)

19. XN-NF-80-19(P)(A), Revision 1, “Exxon Nuclear Methodology Boiling Water Reactors: Application of the ENC Methodology to BWR Reloads,” Volume 4, Exxon Nuclear Company, June 1986 (ADAMS Accession No. ML081700491).

20. XN-NF-80-19(P)(A), “Exxon Nuclear Methodology for Boiling Water Reactors: EXEM BWR ECCS Evaluation Model,” Volumes 2, 2A, 2B, and 2C, Exxon Nuclear Company, September 1982 (ADAMS Accession No. ML091210171).

21. XN-NF-81-58(P)(A), “RODEX2 Fuel Rod Thermal-Mechanical Response Evaluation Model,” Exxon Nuclear Company, March 1984 (ADAMS Accession No. ML081340725).

22. XN-NF-84-105(P)(A), “XCOBRA-T: A Computer Code for BWR Transient Thermal-Hydraulic Core Analysis,” Advanced Nuclear Fuels, February 1987 (ADAMS Accession No. ML081340188).

23. XN-NF-85-67(P)(A), Rev. 1, “Generic Mechanical Design for Exxon Nuclear Jet Pump BWR Reload Fuel,” Exxon Nuclear Company, November 1986 (ADAMS Accession No. ML081760201).

24. XN-NF-82-06(P), Rev. 1, Supplement 2, “Qualification of Exxon Nuclear Fuel for Extended Burnup Supplement 2 Response to USNRC Questions,” Exxon Nuclear Company, June 1984 (ADAMS Accession No. ML081710802).

25. XN-NF-85-74(P)(A), “RODEX2A (BWR) Fuel Rod Thermal-Mechanical Evaluation Model,” Exxon Nuclear Company, August 1986 (ADAMS Accession No. ML081760203).

26. XN-NF-85-92(P)(A), “Exxon Nuclear Uranium Dioxide/Gadolinia Irradiation Examination and Thermal Conductivity Results,” Exxon Nuclear Company, August 1986.

27. EMF-85-74(P), Supplement 1(P)(A) and Supplement 2 (P)(A), “RODEX2A (BWR) Fuel Rod Thermal-Mechanical Evaluation Model,” Siemens Power Corporation, February 1998.

28. NEDC-33004P (CLTR), “Constant Pressure Power Uprate,” General Electric Nuclear Energy, March 2001 (ADAMS Accession No. ML010870309).

29. Final Safety Evaluation of NEDC-33004P, “Constant Pressure Power Uprate,” U.S. Nuclear Regulatory Commission, March 31, 2003 (ADAMS Accession No. ML031190163).

30. NUREG-0800, “Standard Review Plan for the Review of Safety Analysis Reports for Nuclear Power Plants,” Section 15.8, “Anticipated Transients Without SCRAM,” U.S. Nuclear Regulatory Commission, March 2007 (ADAMS Accession No. ML070570008).

31. NUREG-0800, “Standard Review Plan for the Review of Safety Analysis Reports for Nuclear Power Plants,” Section 8.4, “Station Blackout,” U.S. Nuclear Regulatory Commission, March 2007 (ADAMS Accession No. ML070550061).

32. NUREG-0800, “Standard Review Plan for the Review of Safety Analysis Reports for Nuclear Power Plants,” Section 4.3, “Nuclear Design,” U.S. Nuclear Regulatory Commission, March 2007 (ADAMS Accession No. ML070740003).

33. NUREG-0800, “Standard Review Plan for the Review of Safety Analysis Reports for Nuclear Power Plants,” Section 4.2, “Fuel System Design,” U.S. Nuclear Regulatory Commission, March 2007 (ADAMS Accession No. ML070740002).

34. NEDO-32407-A, “ATWS Rule Issues Relative to BWR Core Thermal-Hydraulic Stability,” General Electric Nuclear Energy, June 1995 (ADAMS Accession No. ML091760804).

35. NEDO-32164, “Mitigation of BWR Core Thermal-Hydraulic Instabilities in ATWS,” General Electric Nuclear Energy, December 1992 (ADAMS Accession No. ML091760804).

36. Regulatory Guide 1.155, “Station Blackout,” U.S. Nuclear Regulatory Commission, August 1988.

37. Letter, J.H. Nordahl (SPC) to Direactor, Office of Environment (NRC), “Siemens Power Corporation-Nuclear Division Responses to the Demand for Information, Notice of Nonconformance and Unresolved Items (Inspection Report 99900081/97-01),” February 14, 1998.

38. Letter, D. Langley to NRC, “Browns Ferry Nuclear Plant (BFN)-Units 2 and 3-Technical Specifications (TS) Change TS-418-Extended Power Uprate (EPU)-Supplemental Response to Request for Additional Information (RAI) Rounds 3 and 18 and Response to Round 20 Fuels Methods RAIs (TAC Nos. MD5263 and MD5264),” September 19, 2008 (ADAMS Accession No. ML0826900161).

39. Final Safety Evaluation Related to Extended Power Uprate at Susquehanna Steam Electric Station, Units 1 and 2, U.S. Nuclear Regulatory Commission, December 24, 2007 (ADAMS Accession No. ML073521556 (proprietary)).

40. Letter, B.T. McKinney (PPL) to NRC, “Susquehanna Steam Electric Station Proposed License Amendment Numbers 285 for Unit 1 Operating License No. NPF-14 and 253 for Unit 2 Operating License No. NPF-22 Constant Pressure Power Uprate, PLA-6076,” October 11, 2006 (ADAMS Accession No. ML062900160 (nonproprietary)).

a. Attachment 1, “Proposed Technical Specification Pages (Mark-up)” (ADAMS Accession No. ML062900160 (nonproprietary))
b. Attachment 2, “Changes to Technical Specifications Bases Pages (Mark-up, Provided for Information)” (ADAMS Accession No.ML062900160 (nonproprietary))
c. Attachment 3, “Supplemental Environmental Report” (ADAMS Accession No. ML062900161 (nonproprietary))
d. Attachment 4, “Susquehanna Steam Electric Station Units 1 and 2 Safety Analysis Report for Constant Power Pressure Uprate,” October 2006 (ADAMS Accession No. ML062900405 (proprietary))
e. Attachment 5, “General Electric and Framatome ANP, Inc Affidavits” (ADAMS Accession No. ML062900161 (nonproprietary))
f. Attachment 6, “Susquehanna Steam Electric Station Units 1 and 2 Safety Analysis Report for Constant Power Pressure Uprate,” October 2006 (ADAMS Accession No. ML062900401 (non-proprietary))
g. Attachment 7, “List of Planned Modifications” (ADAMS Accession No. ML062900401 (non-proprietary))
h. Attachment 8, “Startup Testing” (ADAMS Accession No. ML062900306 (nonproprietary))
i. Attachment 9, “Flow Induced Vibration Piping/Components Evaluation” (ADAMS Accession No. ML062900306 (nonproprietary))
j. Attachment 10, “Steam Dryer Structural Evaluation,” October 2006 (ADAMS Accession No. ML062900361 (proprietary))
k. Attachment 11, “Grid Stability and Evaluation” (ADAMS Accession No. ML062900306 (nonproprietary))
l. Attachment 12, “RS-001—Standard Review Plan Correlation Matrices” (ADAMS Accession No. ML062900306 (nonproprietary))
m. Attachment 13, “RS-001—Safety Evaluation Template” (ADAMS Accession No. ML062900306 (nonproprietary))
n. Attachment 14, “Steam Dryer Structural Evaluation,” October 2006 (ADAMS Accession No. ML062900162 (nonproprietary))
o. Attachment 15, “General Electric and Continuum Dynamics Inc. Affidavits” (ADAMS Accession No. ML062900162 (nonproprietary))

41. EMF-CC-074(P)(A), “BWR Stability Analysis: Assessment of STAIF with Input from MICROBURN-B2,” Volume 4, Siemens Power Corporation, August 2000 (ADAMS Accession No. ML090750216).

42. AREVA Letter, Gardner, R., to NRC, “Informational Transmittal Regarding Requested White Papers on the Treatment of Exposure Dependent Fuel Thermal Conductivity Degradation in Legacy Fuel Performance Codes and Methods,” July 14, 2009 (ADAMS Accession No. ML092010160).

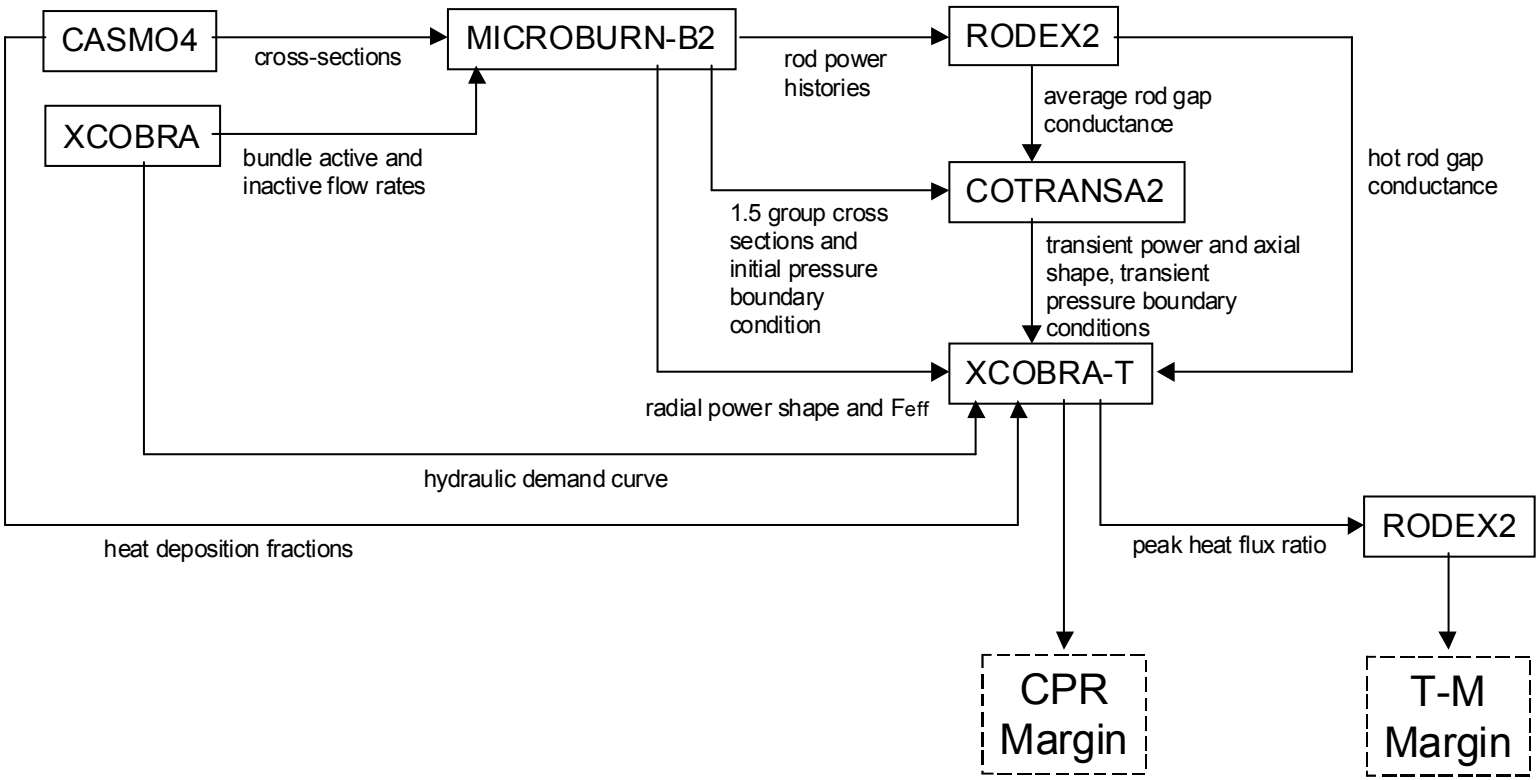


**Figure 1 AREVA transient code system process diagram**

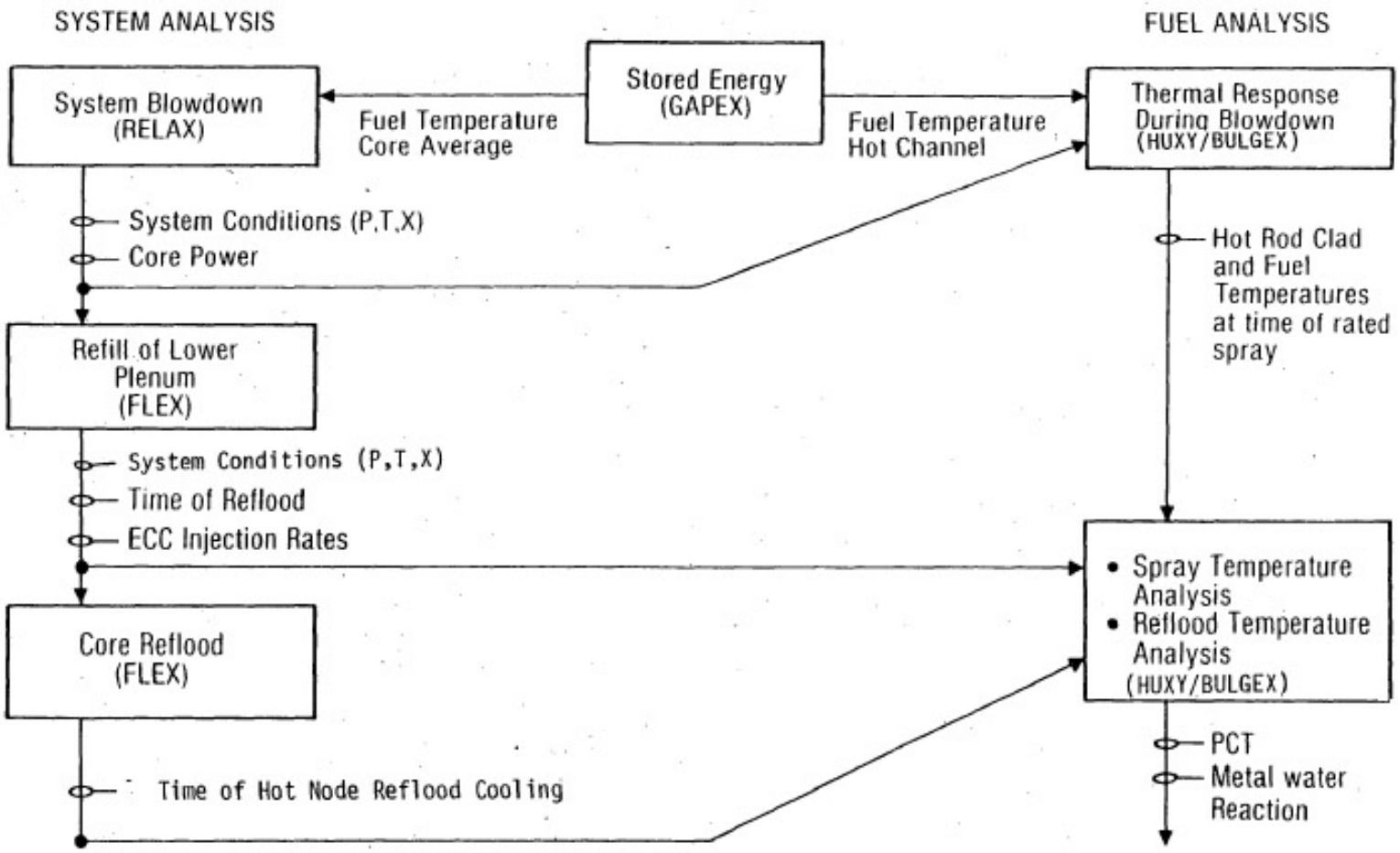


**Figure 2 AREVA EXEM ECCS evaluation model process diagram (XN-NF-80-19(P)(A), Volume 2)**

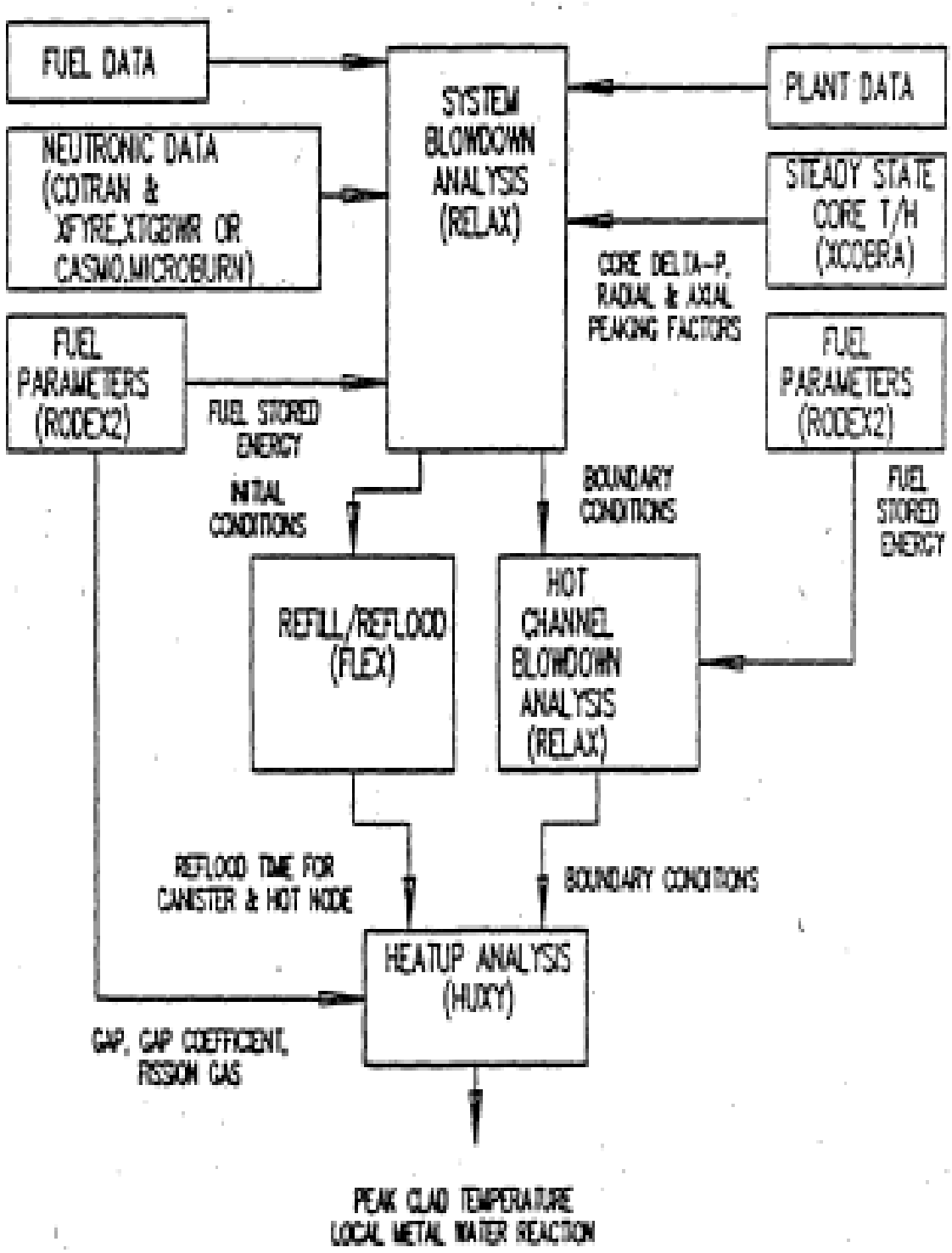


**Figure 3 AREVA EXEM ECCS evaluation model process diagram (ANF-91-048(P)(A))**

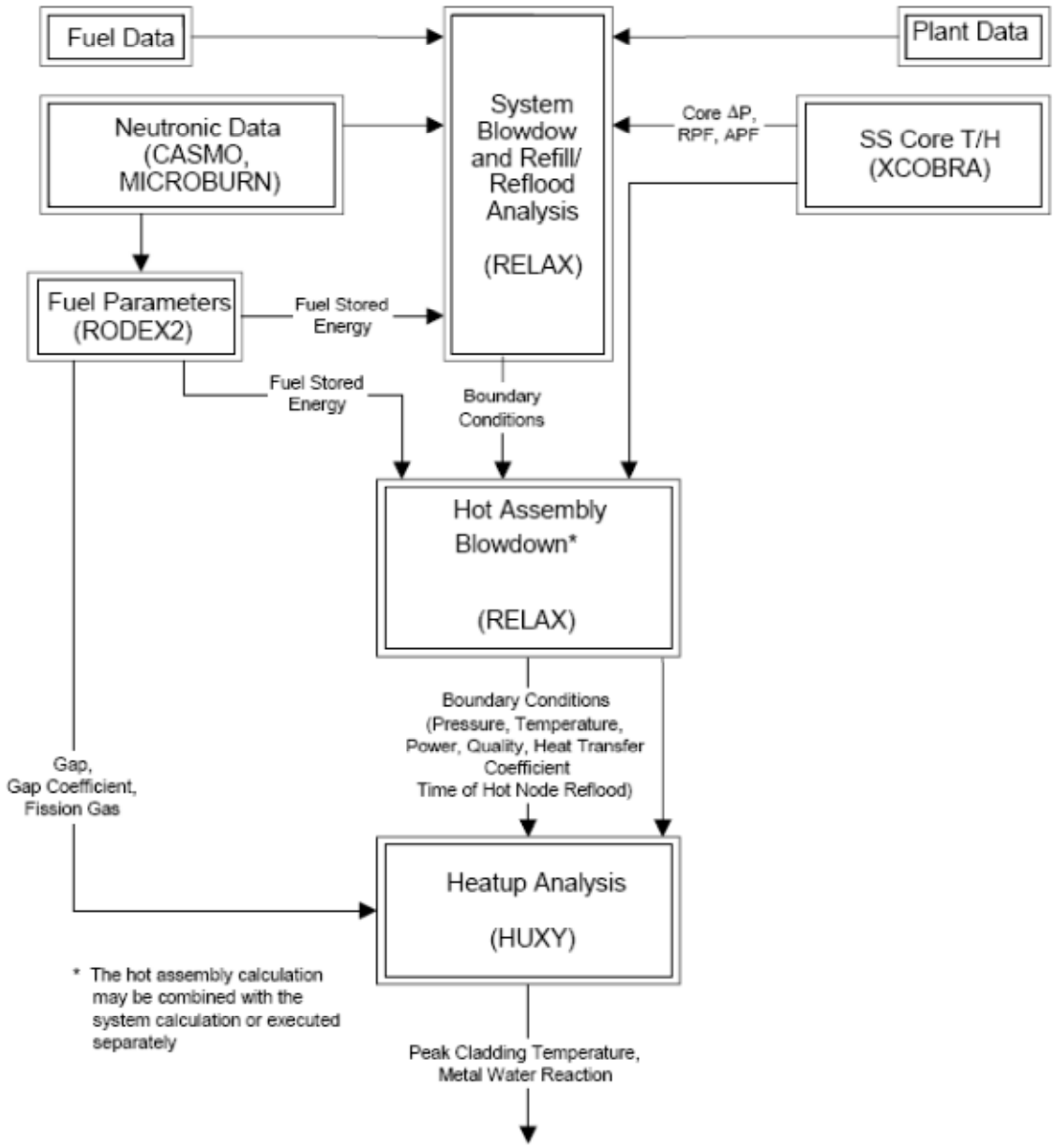


**Figure 4 AREVA EXEM BWR-2000 methodology process diagram (EMF-2361(P)(A))**

**Table 1 RODEX2 Input Specifications (XN-NF-81-58(P)(A))**

[

]

# SURVEY OF AREVA PRESSURIZED WATER REACTOR SAFETY ANALYSIS METHODS

## 1 INTRODUCTION

The Commission requires that the safety of nuclear power plants be evaluated pursuant to 10 CFR 50.34, 10 CFR 50.36, and 10 CFR 50.46. In order for licensees to perform safety analyses to demonstrate compliance with the Commission's regulations a series of computer codes are used. Generally, these computer codes are developed by licensees or vendor organizations and are generically approved by the NRC.

An essential element in the computational approach is the modeling of various physical processes that are important in the prediction of transient and accident events. These models are used in a concerted approach to simulate reactor conditions for postulated events and are used to assess particular figures of merit for comparison against applicable regulatory criteria.

Current licensing evaluations are performed using legacy fuel thermal performance models. These are models that intend to simulate the heat transfer aspects of nuclear fuel elements under conditions of normal operation and accident conditions. The legacy fuel thermal performance models are specifically those models that were developed and approved by the NRC staff based on historical qualification data. These data were limited in the range of exposure to levels far below those levels of exposure representative of modern day fuel designs and operating strategies.

Beginning in 1999, several vendor organizations submitted improved fuel thermal models to the NRC for review and approval. These new models incorporate more recent test data that indicates exposure has a significant impact on the thermal-physical properties of the fuel. Specifically, recent experience and experimental data indicate significant degradation of fuel pellet thermal conductivity with exposure. NRC analysis of these newer, modern fuel models and the recent data has led the staff to conclude that the use of the older, legacy fuel models will result in predicted fuel pellet conductivities that are higher than the expected values.

Additionally, cycle fuel reloads for power reactors require that safety analyses be performed to ensure adequate protection by establishing operational and safety limits that cannot be exceeded during normal operation. The bases for these limits are cycle specific safety analyses performed using a suite of NRC-approved computer methods. The NRC staff is concerned that the usage of legacy fuel thermal performance models, at multiple points within the body of the safety analyses, may result in the downstream effect of calculated safety limit margins that are less conservative than previously understood.

# 2 BACKGROUND

In order to perform safety analyses, all code systems must include a calculational methodology for evaluating fuel thermal and mechanical performance. In the AREVA suite of codes this methodology is the TACO3, RODEX, and COPERNIC codes. These codes are characterized by a system of physical and empirical models that are exercised in a coupled numerical framework to predict the fuel rod behavior under postulated operational and transient or accident conditions. Several of the models used to model fuel behavior from RODEX2/3/4 are replicated in other AREVA calculational methods where the prediction of the fuel rod thermal and/or mechanical behavior is an essential part of the overall system analysis.

This section provides a description of the background of the RODEX2/3/4 and COPERNIC thermal-mechanical methodologies, specifically the submittal of the Licensing Topical Report (LTR) and approval through the issuance of a Safety Evaluation (SE) by the NRC staff.

## 2.1 RODEX2 Development and Approval

Exxon Nuclear Company (ENC, now AREVA) submitted the RODEX2 Revision 2 LTR for review and approval on September 2, 1981. This LTR describes the basic models and calculational framework that represent the RODEX2 methodology. The staff reviewed the RODEX2 code consistent with the applicable regulatory guidance and issued its safety evaluation on November 16, 1983. ENC submitted the RODEX2 method as an updated method to the previously approved GAPEXX fuel rod model approved in November 1973.

## 2.2 RODEX3 Development and Approval

Siemens Power Corporation (SPC, now AREVA) submitted the RODEX3 Volume I, II, and Supplement 1 LTR for review and approval in March 1991. This LTR describes the basic models and calculational framework that represent the RODEX3 methodology. The staff reviewed the RODEX3 code consistent with the applicable regulatory guidance and issued its safety evaluation on February 23, 1996. SPC submitted the RODEX3 method as an updated method to the previously approved RODEX2 fuel rod model.

## 2.3 RODEX4 Development and Approval

Framatome ANP (now AREVA) submitted the RODEX4, Revision 0, LTR for review and approval on August 19, 2004. This LTR describes the basic models and calculational framework that represent the RODEX4 methodology. The staff reviewed the RODEX4 code consistent with the applicable regulatory guidance and issued its safety evaluation on February 12, 2008. Framatome ANP submitted the RODEX4 method as an updated method to the previously approved RODEX3 fuel rod model.

## 2.4 COPERNIC Development and Approval

Framatome ANP (now AREVA) submitted the COPERNIC Revision 0 LTR for review and approval on September 16, 1999. This LTR describes the basic models and calculational framework that represent the COPERNIC methodology and the licensing application in the US. The staff reviewed COPERNIC consistent with the applicable regulatory guidance and issued its final safety evaluation on June 14, 2002. Framatome Cogema Fuels (FCF) submitted an

extension of the COPERNIC code to mixed oxide (MOX) applications on July 31, 2000. The staff reviewed this extension of the COPERNIC code to MOX and approved the application on January 14, 2004.

### 2.5 PWR White Paper

During a meeting with AREVA on April 21, 2009, the staff requested and AREVA discussed the impact that fuel thermal conductivity may potentially have on various licensing analyses if the models were biased relative to the expanded validation database. To this end, AREVA provided two technical white papers to the staff on July 14, 2009, that provide the basis of an internal review of AREVA's codes against the 10 CFR 21 defect determination criteria (Reference 11). AREVA's review considered RODEX2, RODEX2A, and RODEX3.

**[**

**]**

## 3 Code System Overview and Interfaces

The staff has reviewed the individual codes that comprise the AREVA suite of safety analysis methods. This section provides an overview of the individual codes and the interfaces between codes in the overall system used to evaluate steady state, transients, and accidents for PWRs. The codes used for AREVA's transient analysis methodology described in this section are RODEX2/3/4, COPERNIC, S-RELAP5, and NEMO.

### 3.1 RODEX2

RODEX2 is an interactive thermal-mechanical computer code that takes into account thermal-hydraulic conditions, power distributions, power history, and the irradiation environment (Reference 3). The RODEX2 computer code performs these interactive calculations for a fuel rod under normal operational conditions. This code can be used to determine initial conditions for specialized analyses, such as power ramping studies, transient analyses, and accident analyses. Physical processes are realistically modeled, although empirically adjusted parameters are used to correlate predictions of fuel centerline temperatures, fission gas release, internal rod pressure and cladding deformations with measured values of these quantities.

RODEX2 provides an integrated evaluation procedure for considering the effect of varying temporal and spatial power histories on the temperature distribution, inert fission gas release and deformation distribution (mechanical stress-strain and density state) within the fuel rod. The surface conditions for the fuel rod are calculated with a thermal-hydraulic model of a rod in a flow channel. The gap conductance model includes the effects of fill gas conduction, gap size, amount of fuel cracking and the fuel-cladding contact pressure. It is an expansion of the model used in the GAPEX code. The fill gas pressure model, the displacement definitions, and fuel region specification are generalizations of those used in the GASPRX code. The cladding deformation model is a generalization of the COLAPX model which considers biaxial loading and anisotropic creep response.

The RODEX2 code incorporates models to describe the thermal-hydraulic condition of the fuel rod in a flow channel; the gas release, swelling, densification, and cracking in the pellet; the gap conductance; the radial thermal conduction; the free volume and gas pressure internal to the

fuel rod; the fuel and cladding deformations; and the cladding corrosion. The calculations are performed on a time incremental basis with conditions being updated at each calculated increment.

The time incremental procedure allows the power history and path dependent processes to be modeled. The axial dependence of the spatial power and burnup distributions are handled by dividing the fuel rod into a number of fuel segments which are modeled as radially dependent regions whose axial deformations and gas releases are summed. Power distributions can be changed at any desired time and the coolant and cladding temperatures are readjusted at all axial nodes. Deformation of the fuel and cladding and gas release are calculated using shorter time increments than those used to define the power generation. Gap conductance calculations are made for each of these incremental calculations based on gas released throughout the rod and the accumulated deformation at the midpoint of each axial region within the fueled region of the rod. The deformation calculations include consideration of densification, swelling, instantaneous plastic flow, creep, cracking and thermal expansion for the pellet, and of creep, irradiation induced growth and thermal expansion for the cladding. Corrosion and hydrogen pickup for the cladding can also be evaluated. With the intensive variables of temperature and stress state estimated, pseudo steady state models are used to estimate rates of gas release, corrosion, mechanical deformation and fuel restructuring.

The general calculational methodology used in RODEX has been retained in RODEX2, but more inclusive material response models have been incorporated into the new version. The fuel swelling, gap conductance and gas release models have been revised and a grain growth model has been added. More complete modulization of the coding has been incorporated into the programming. A generalization of the axial region description has been made to include varying length axial regions. A capability to use two pellet geometries is also included so that blanket fuel designs can be evaluated. The pellet mechanical response models have also been generalized to include both annular and solid pellets. The material property models for mixed oxides of both gadolinia-urania and plutonia-urania have been updated. The modeling assumptions and evaluation procedures are for Light Water Reactor fuel (BWR and PWR) rod design evaluations. The coding includes prescribed material behavior models and empirical correlations so that evaluations for light water reactor fuels can be made by prescribing only geometry, fabrication, flow and power distribution histories. RODEX2 has incorporated the expanded evaluation capabilities developed in applying RODEX to meet an increased number of design options with consistent evaluation procedures.

The RODEX2 code evaluates fuel burnup and fast flux at every time step and includes the calculation of the rod average burnup, axial burnup (evaluated at every axial section), radial burnup (evaluated at every radial fuel region for each axial section), and fast flux for each axial section. RODEX2 uses a correlation between each period of constant power generation or a multiple of the linear heat generation rate to determine the fast flux. The axial distribution of the fast flux can be defined as proportional to the axial distribution of power. The correlations used in RODEX2 are based on a fast flux with energy greater than 1 MeV. However, the thermal conductivity model **[**

**]** Information from PNNL, at the time the SE was issued, indicated that irradiation effects on the thermal conductivity of UO2 were limited to temperatures of less than 500 $^{o}$C, which is below the majority of fuel temperatures experienced during normal operation. Therefore, after considering burnup effects as required by Appendix K, the staff found no reason to require an explicit burnup dependence in the ENC expression for thermal conductivity. Since then, data from experiments performed at Halden has demonstrated that fuel thermal conductivity is a function of burnup, and not just at low temperatures.

RODEX2 provides input to downstream safety analyses. In particular, RODEX2 provides initial fuel conditions for ECCS-LOCA evaluations and non-LOCA evaluations. The ECCS-LOCA and non-LOCA evaluations are performed by S-RELAP5 in AREVA's current suite of codes.

### 3.2 RODEX3

The RODEX3 code simulates the thermal and mechanical response of a fuel rod as a function of exposure for the normal and power ramp conditions encountered in PWRs and BWRs (Reference 2). The RODEX3 code evolved from ANF's steady-state fuel performance code RODEX2 and ANF's power ramp analysis code RAMPEX. Enhanced code calculational capabilities and response model revisions have been added to more realistically model new fuel designs and test rods, power histories and the interactions between the phenomena influencing fuel performance. The initial RODEX3 application will be to establish the fuel conditions at the initiation of ANF's realistic larger break LOCA calculations. The calculations will be analyzed with ANF's version of RELAP5 code.

The RODEX3 simulation models a fuel rod in coolant subchannel. Phenomenological rate dependent models are used to evaluate the temperature, stress and exposure dependent changes in the state of the fuel and cladding materials and in the release of the inert gaseous fission products. A quasi steady-state computational procedure is used to evaluate the response of a fuel rod as a function of time.

The RODEX3 code has been benchmarked to realistically model the mechanical response, the thermal response and the fission gad release during steady-state and normal power maneuvering operations for LWR fuel rods. The RODEX3 code uses pseudo steady-state solution algorithms to solve for the thermal and mechanical responses which neglect the effects of the thermal heat capacity and the mechanical inertia. Hence, RODEX3 applications are limited to analyses where the effects of the thermal and mechanical inertia can be neglected.

For the analysis of rapid transients or accidents, the thermal capacitance of the fuel and cladding must be modeled to correctly predict the thermal response of the fuel and the cladding. For these transients, the RODEX3 code is used to evaluate the initial fuel rod conditions at the start of the transient or accident. The transient thermal response of the fuel rod is analyzed with ANF's transient thermal-hydraulic codes (e.g. RELAP5, S-RELAP5). These codes account for the thermal capacitance of the fuel rod during the transient or accident.

The fuel column and cladding are divided into axial regions. The lengths of the axial regions are specified by the input. Up to five different fuel types may be defined for the axial regions in the fuel column. The initial dimensions of the cladding are assumed to be the same for all regions, but different initial fuel dimensions and material characteristics may be used for each fuel type. Conditions in the flow channel are computed at the centers of the axial regions. These calculations establish the thermal boundary conditions at the outer cladding surface for the radially dependent calculations for the fuel and cladding.

Each axial region is further subdivided into radial regions. The cladding is represented by one region, the pellet/cladding gap by one region, and the number of regions in the fuel is specified by the input. For the mechanical evaluations, these radial regions are treated as two substructures; one for the cladding and one for the fuel. The cladding substructure's creep deformations are evaluated using an integration procedure with conditions defined at eight subboundaries. This evaluation procedure accounts for the strong creep rate dependence of

the cladding on temperature. The conditions in the gap region establish boundary conditions for both the thermal and mechanical interaction between the cladding and fuel substructures.

The fuel substructure is subdivided into radial regions. The radially dependent calculations for the fueled portion of fuel rod are performed for the center of each axial fuel region. Compatibility conditions between fuel and cladding, determination of gap conductance and gap size, and satisfaction of cladding-coolant subchannel conditions require that radial temperatures and displacements be evaluated at radial region boundaries. Bulk material properties (elastic modulus, thermal expansion, thermal conductivity, etc.) and the state variables (grain size, porosity, swelling, creep strains, fission gad contents, etc.) are evaluated at the average temperatures and for mean power conditions within the subdivided radial regions. Axial expansion calculations and free volume calculations take into account the presence of dished pellet designs; thus, one material boundary in the fuel must be established at the dish radius.

The input cycle is subdivided into shorter time increments to evaluate the evolution of the history dependent state of the fuel rod components. The size of the calculational time steps is based upon a number of criteria that have been established to assure numerical stability and convergence. Three types of criteria are used to specify the time increment during the linear variation of the operational environment.

The time increment for the calculational step is increased or reduced based on the most limiting of the preceding criteria. When calculations are initiated from conditions where the previous operational history is not available (initial input, restart input, or from a discontinuous change in the operational environment), then the extrapolation process is not valid. In these cases, the time increment is dependent upon the contact pressure, the increment in the power change, and the linear heat generation rate. The conditions at the start of the time increment are used for the mid-increment estimate in these cases. No more than 5 percent of the input cycle time is used for such cases.

Having selected the calculational time step, mid-time step values for the intensive variables (temperatures, neutron flux, fission rates, interaction forces, etc.) are calculated or estimated. These values and the initial values of the state properties are used to calculate the incremental changes in the state properties (burnup, fluence, cladding oxide thickness, pellet and cladding creep strains, densification-swelling voids, gaseous fission product distribution, etc.) The changes in state properties are assumed to be described by the rate equations whose solution will yield numerically stable values for the incremental changes if mid-step values are used for the intensive variables in these models. When the incremental changes in the state properties have been updated, then the end of the time step values for the intensive forces and consistent thermal expansions, elastic deformations and material properties are determined.

The determination of the pellet-cladding gap conductance requires the interdependent evaluation of gap size, contact forces, thermal expansions, elastic deformations and the temperature dependent material properties. The converged calculations yield a compatible set of gap conductance, thermal expansions, pellet temperature distribution, and contact pressure. Once these calculations are completed for all the axial regions, the axial interactions due to trapped stack effects are evaluated. With temperatures, free volumes, and free gas within the rod determined, the fill gas pressure in the rod is determined.

The LOCA analysis is performed using the transient thermal-hydraulic code and the steady-state thermal output from RODEX3. Thermal-related output from RODEX3, including

fuel and cladding dimensions, gap conductances for each axial node, fuel thermal conductivity, and stored energy, are passed to the transient thermal-hydraulic code as input.

### 3.3 RODEX4

The RODEX4 code simulates the thermal-mechanical performance of fuel rods for BWRs (only BWRs, not PWRs) (Reference 4). The RODEX4 code models the thermal-mechanical behavior of the fuel rods during normal operation and anticipated operational occurrences. This code originated from RODEX3. The code was structured into a modular architecture, mechanical models were improved, high burnup models were implemented, and validation to an extensive fuel performance database was performed.

The RODEX4 fuel performance code was developed to realistically predict the thermal-mechanical behavior of a single fuel rod in a LWR up to burnups greater than 62 GWd/MTU. It contains a consistent set of physical models for the thermal and mechanical analysis of PWR and BWR fuel in normal and off-normal conditions. The components modeled are the fuel rod coolant, the pellets, the different zones of the active fuel column, the plenum volumes, the fill and released fission gases, the radial pellet-clad gap, and the cladding.

The RODEX4 fuel performance code simulates the thermal and mechanical response of a fuel rod in a reactor core as a function of exposure for the local power and flow conditions encountered during reactor operation. Phenomenological rate dependent models evaluate the temperature, strain, and exposure dependent changes in the state of the fuel and cladding materials and the release of the fission gas products. The fuel rod performance code is calibrated to the observable pellet, clad, and rod behaviors. These are primarily the central pellet temperature, clad circumferential and axial deformation, clad oxidation, rod void volume, and fission gas release fraction.

The RODEX4 code is based on the RODEX2 and RODEX3 codes previously approved by the NRC. RODEX4 has been fully restructured into a modular form. New best-estimate models have been incorporated to model the fuel rod behavior to high burnup and a thermal transient capability was added.

The RODEX4 code includes a set of stand-alone subprograms, each describing a single physical phenomenon. This enables testing of the individual physical models and facilitates the introduction of new or improved models. The subprograms are called by a driver program that controls overall progress of the analysis. Special numerical subroutines control the time step and accelerate the convergence of the iterative processes. RODEX4 includes a separate library of material properties.

The RODEX4 code evaluates the thermal-mechanical responses of a fuel rod surrounded by coolant. The fuel rod model considers the fuel column, the gap region, the cladding, the gas plena, and the fill and released fission gases. The fuel rod is divided into axial regions with conditions computed for each region. The fuel is also sub-structured into radial regions with the material properties and state variables evaluated for each region. The operational conditions are controlled by the input of rod linear heat generation rate and its axial distribution, fast flux and axial distribution, coolant inlet temperature or enthalpy, the coolant pressure, and the coolant mass velocity.

Thermal boundary conditions for the cladding are calculated with the thermal-hydraulic model for the reactor coolant. The operational conditions are defined at the start and end of an input

time period. During the time period, the operational conditions vary linearly, or remain constant. The thermal processes are analyzed based on a finite-difference solution to the steady-state heat conduction equation. This solution is applicable for events with a time duration down to about a minute.

The evaluation of changes in the physical state of the fuel model components is calculated using incremental calculations based on path dependent solutions of the rate dependent models. The interactions between fuel rod components and evaluation of thermal conditions (intensive variables) are evaluated at the start and end of each time increment. The intensive variables used to evaluate incremental changes in the state of the fuel model components are either calculated or estimated mid-time step values.

The RODEX4 thermal conductivity model is a function of temperature, burnup, gadolinia, and plutonium content similar to the thermal conductivity model in FRAPCON-3. The NRC audit code, FRAPCON-3, currently utilizes a urania (UO2) fuel thermal conductivity model proposed by Nuclear Fuel Industries (NFI) of Japan that has been modified by PNNL to better fit the current data. The modified NFI model is based on recent high burnup and high temperature thermal conductivity data and provides a good comparison to both in-reactor fuel temperature and ex-reactor diffusivity data at high burnups. The RODEX4 model is based on the thermal conductivity data at intermediate to high temperatures of unirradiated UO2 using measurements of thermal diffusivity and heat capacity by a specialized laser-flash method. Comparison of these two models for unirradiated UO2 shows that the RODEX4 model predicts **[** **]** than the FRAPCON-3 model with increasing temperature.

For urania-gadolinia (UO2-Gd2O3) fuel, the RODEX4 thermal conductivity model contains a degradation function that is **[** **]** contained in burnable absorber rods. To assess the thermal conductivity penalty applied in RODEX4 for gadolinia additions, the RODEX4 model was compared to the similar correction for gadolinia addition in FRAPCON-3. At high temperature, the FRAPCON-3 thermal conductivity model under predicts these data while the RODEX4 model provides a best-estimate prediction of these data.

### 3.4 COPERNIC

COPERNIC is a fuel thermal-mechanical code approved by the staff in 2002. It is approved to analyzed urania and mixed oxide fuels (Reference 8).

The COPERNIC fuel thermal conductivity model is composed of **[** **]** as that contained in the Nuclear Fuel Industries (NFI) model, nor as dominant as that in two other recently published thermal conductivity models by Halden and the French utility, Electricite de France (EDF). Furthermore, the model **[** **]** for un-irradiated UO recently published by Ronchi, et al.

The NRC audit code, FRAPCON-3, currently utilizes two fuel thermal conductivity models: (1) a model proposed by Lucuta, et al. that was originally used in the code, and (2) an alternate conductivity model proposed by NFI of Japan. The NFI model is based on more recent high burnup thermal conductivity data and provides the best comparisons to both In-reactor fuel temperature and ex-reactor diffusivity data at high burnup. The NFI model has a larger

degradation in thermal conductivity with fuel burnup than the Lucuta, et al. model, and thus provides higher predicted fuel temperatures with increasing burnup. The staff considers that the NFI model is better than the Lucuta, et al. model for use at high burnups with the FRAPCON-3 code, and it is therefore the primary model used for comparison to the COPERNIC code.

In its review of COPERNIC, the staff requested and received FCF information that provided sufficient detailed design and operating history Information to allow for one high-burnup database case comparison calculation (the "EXTRAFORT" rod) with FRAPCON-3. This case involved a re-fabricated high-burnup (58 GWd/MTU) pressurized water reactor (PWR) rod section that was instrumented with a fuel centerline thermocouple and then operated in the OSIRIS test reactor. FRAPCON-3 has been verified against a large amount of high burnup fuel rod data, including fuel centerline temperature measurements. The EXTRAFORT data were also compared with FRAPCON-3 code predictions as further verification of the code. The measured fuel temperatures were slightly under predicted by the FRAPCON-3 code (Lucata thermal conductivity) and slightly overpredicted when the NFI thermal conductivity model was used in the code. The COPERNIC code **[** **]** in the EXTRAFORT rod.

In its review of COPERNIC, the staff also requested and obtained a comparison between COPERNIC predictions and data from Halden re-fabricated, instrumented boiling water reactor (BWR) high-burnup rod segment IFA-597.213. This rod was base-irradiated to 60 GWd/MTU in the Ringhals BWR and then re-fabricated with a fuel centerline thermocouple and irradiated at a nominal power (20 to 25 kW/m) in the Halden test reactor for approximately 100 days, thereby extending the rod-average burnup to 70 GWd/MTU. The COPERNIC code **[** **]** for this rod near the end of the irradiation is 70 GWd/MTU. FCF also provided COPERNIC predictions of the widely used IFA 862 Rod 16 and 18 (Halden Ultra-High Burnup) data commonly referred to as the HUHB data. These comparisons to the two IFA 562 rods show that the code **[** **]** when rod-average burnups exceed 35 GWd/MTU.

The overall code-data fuel temperature comparisons for COPERNIC indicate that the code predictions **[** **]** at low fuel burnups. **[** **]** The comparison of the COPERNIC thermal conductivity model to other recently published models, plus in-reactor Halden data, and ex-reactor unirradiated data suggests that the code **[** **]** and also **[** **]** The small overprediction in fuel thermal conductivity results in a slight under-prediction in fuel temperatures for some licensing analyses. Based on an acceptable uncertainty level and good agreement of the temperature predictions between the COPERNIC and NRC audit codes, the staff found that the thermal conductivity model is acceptable In the COPERNIC code.

### 3.5 NEMO and CASMO-3

NEMO is a two-energy-group neutronics program employing the nodal expansion method to determine the currents and fluxes at the surface of each node in the core (Reference 1). The nodal balance equation is solved in three dimensions to determine the neutron flux, source, relative power density (including pin power reconstruction), and reactivity of a reactor core. Fourth-order polynomials are used for the fast-group flux expansion, while either a fourth-order

polynomial or a polynomial combined with hyperbolic terms is used for the thermal flux. An algorithm in NEMO determines which flux expansion is used. The transverse leakage is treated using a quadratic polynomial. Discontinuity factors are used to provide continuity of the heterogeneous fluxes at the node surfaces. Variable node spacings may be used to accommodate axial heterogeneities. The capability for reconstructing pin powers is also provided. To fully utilize the capabilities of the two-group model, an isotopic depletion calculation is incorporated in NEMO. The microscopic cross sections required by the depletion calculation are obtained from cross section database files. The interpolation of these cross sections is performed versus a six-dimensional space of independent variables (burnup, boron concentration, xenon concentration, moderator specific volume, fuel temperature, and a spectral parameter). The interpolation methodology has been optimized using mathematical tools that allow for efficient calculation of cross sections. The cross section data for the database are obtained from single-assembly CASMO-3 calculations.

The cross sections for each node are spatially dependent. Each node will contain node-average cross sections obtained from a cross section database. The fuel thermal conductivity formulation does not have any impact on the cross section calculations. CASMO-3 is used to generate nuclear parameters as a functional form of several lattice average parameters, including the average fuel temperature. To perform this calculation CASMO-3 does not need to evaluate the fuel temperature, but is rather used to calculate the variation in lattice-averaged nuclear parameters as a function of fuel temperature

Each node will contain fission and absorption cross sections for each of its surfaces. The surface cross sections differ from the node-average cross sections since surface burnup values are used. These cross sections also differ due to feedback effects from xenon (which include the effects of different fission rates at the surface of the node). Through the use of this cross section methodology, local physics parameters are treated in a more accurate manner.

An additional method employed to improve the accuracy of the cross sections is the use of flux weighting. As the flux solution converges, both the node-average and the surface cross sections obtained from the cross section database are flux weighted. The reaction rate calculation for large nodes is thus using a better approximation and the nodal solution is more accurate.

Three different methods of cross section calculations can be performed by NEMO. The microscopic calculation option uses microscopic cross sections versus isotope from the cross section database files to determine the macroscopic absorption and fission cross sections for each node. Note that the diffusion coefficients, removal cross section, and discontinuity factors are all calculated using macroscopic tables in the cross section database files. The interpolation of these cross sections is typically performed versus a six-dimensional space of the following independent variables: burnup, boron concentration, xenon concentration, moderator specific volume, fuel temperature, and spectral parameter. The development of the interpolation schemes has been optimized using mathematical tools that allow for efficient calculation of cross sections.

The second method calculates macroscopic absorption and fission cross sections using the macroscopic tables of the cross section database files and optionally, the "delta" macroscopic cross sections from a restart file. The "delta" macroscopic cross sections correct the data from the macroscopic tables to the conditions of the restart file (i.e., isotopic concentrations and microscopic cross sections at each node).

The third method allows the direct input of cross sections by composition. The cross section data is not in tableset form. This method is intended for specific calculations where the user desires to input fixed cross section data by composition type and perform a specific calculation.

The NOODLE thermal-hydraulics model was adopted in NEMO. The moderator temperature and density are calculated using the moderator enthalpy and the system pressure, where the enthalpy is obtained from the power density and hydraulic characteristics of each nodal block in the core. The fuel temperature is obtained from a plot of the difference between fuel and moderator temperatures as a function of power density and burnup.

## 3.6 S-RELAP5

### 3.6.1 Small Break Loss-of-Coolant-Accident (SBLOCA)

The S-RELAP5 code is the systems analysis code for PWR SBLOCA ECCS evaluation for Westinghouse and CE PWRs (Reference 5). S-RELAP5 is a modification of ANF-RELAP. RODEX2 and RODEX3 have been incorporated into S-RELAP5. The internal RODEX2 and RODEX3 models are not used for non-LOCA transients. The objective in using S-RELAP5 is to apply a single, advanced, industry recognized code for all analyses, including LOCA and non-LOCA events. The modifications were made primarily to accommodate large and small break LOCA modeling. A hot rod model has been incorporated within the S-RELAP5 code itself. The hot rod model includes fuel models from the approved fuel design code, RODEX2 and the approved swelling and rupture model from the hot rod model code TOODEE2. The hot rod heat-up calculation is performed as part of the S-RELAP5 system calculation resulting in a single, consistent calculation using one code. In addition, the ICECON code has been incorporated into the S-RELAP5 code, where ICECON subroutines provide the required containment boundary conditions.

S-RELAP5 is the principal computer code used for analysis of the SBLOCA event. Before the analysis can be performed, S-RELAP5 requires initial fuel rod conditions. The rod conditions are calculated by RODEX2 where the fuel burn-up is taken to the desired burnup, usually end of cycle conditions. The RODEX2 results at the desired burnup are transferred to S-RELAP5. A steady state calculation using S-RELAP5 is made that initializes the system model to plant operating conditions. After assuring the steady state calculation is representative of the plant operating conditions, the SBLOCA transient is performed. In addition to calculating the overall system thermal-hydraulic response, S-RELAP5 also concurrently calculates the hot rod temperature transient using the hot rod input including RODEX2 fuel models and the NUREG0630 swelling and rupture models which were taken from the implementation in the TOODEE2 code. Figure 5 shows the simplification made to the methodology by incorporating RODEX2 and TOODEE2 models into S-RELAP5.

The S-RELAP5 code includes hydrodynamic models, heat transfer and heat conduction models, a fuel model, a reactor kinetics model, control system models, and trip system models. S-RELAP5 uses a two-fluid, nonequilibrium, nonhomogeneous, hydrodynamic model for transient simulation of the two-phase system behavior. The hydrodynamics include many generic component models: pumps, valves, separators, turbines, and accumulators. Also included are the special process models: form loss at an abrupt area change, choked flow, and counter-current flow limiting (CCFL) models.

The core in S-RELAP5 is modeled hydraulically as a two-dimensional (r,z) component with three radial regions: a hot assembly, an inner core region, and an outer region. Axially the core

is nodalized to consist of short (-6 inch) volumes over the active length of the core. The power of the hot assembly radial region is set to that of the hot rod which provides local fluid conditions which are bounding for a hot rod. These conditions are used for the hot rod heatup calculation. The region radially adjacent to the hot rod is the inner core region. This consists of approximately the hottest 30 percent of the core (excluding the hot assembly). The outer core is made up of the remainder of the core. This radial nodalization and hot assembly power assumption are consistent with the previously approved SBLOCA methodology. The axial nodalization is much more detailed than the previous model and is based on nodalization studies performed to correct a deficiency in the previous model.

### 3.6.2 Realistic Large Break LOCA (RLBLOCA)

The S-RELAP5 code is used by AREVA to evaluate Realistic Large Break LOCAs (RLBLOCA) (Reference 7). FRAMATOME ANP's realistic LBLOCA evaluation methodology is defined and documented consistent with the Code Scaling, Applicability, and Uncertainty (CSAU) procedure. The CSAU procedure has three major elements, requirements and code capabilities, assessment and ranging of parameters, sensitivity and uncertainty analysis. FRAMATOME ANP's CSAU compliant procedure for PWRs is applicable to Westinghouse (W) 3-loop and 4-loop designs and to Combustion Engineering (CE) 2x4 designs. The selected NPP types to which the methodology is to be applied includes those PWRs with U-tube type steam generators and ECCS injection into the cold leg. These three NPP types have very similar hot and cold legs, pressurizers, steam generators, and vessels.

The codes selected for the performance of the RLBLOCA analysis include the RODEX3A fuel rod code and the S-RELAP5 system code. Frozen versions for each of these codes were selected and used to perform the analyses presented in this report. In addition, the ICECON code has been incorporated into the S-RELAP5 code, where ICECON subroutines provide the required containment boundary conditions.

RODEX3A is a realistic fuel rod mechanical response model, which provides exposure dependent initial fuel conditions for the RLBLOCA evaluation model. Further, to assure compatibility and consistency between the RODEX3A initial fuel conditions, and the initial and transient conditions calculated by S-RELAP5, the appropriate fuel models from RODEX3A were incorporated into S-RELAP5.

RODEX3 has been approved for use in providing input to the RLBLOCA analysis under certain conditions. Following the approval of RODEX3, the code was modified to provide the required input to the S-RELAP5 code. At that time the code was renamed to RODEX3A. The RODEX3A code provides equivalent results on all benchmarks used for the approved RODEX3 code. Section 3.2 provides a detailed description of the calculational methods used in RODEX3.

S-RELAP5 is the systems analysis code for PWR RLBLOCA ECCS evaluation for Westinghouse (W) 3-loop and 4-loop designs and to Combustion Engineering (CE) 2x4 designs. The S-RELAP5 code structure was modified to be essentially the same as RELAP5/MOD3. The coding for reactor kinetics, control systems, and trip systems was also replaced by that from RELAP5/MOD3. The SBLOCA section above provides a detailed description of the calculational methods used in S-RELAP5.

Key to a realistic LBLOCA analysis is the model used for calculating fuel rod performance. In particular the initial operating temperature of the fuel pellets (stored energy) and the internal fuel

rod gas pressure are significant parameters that affect the calculated peak cladding temperature (PCT). These parameters are functions of fuel exposure and power history.

### 3.6.3 Non-LOCA Transients

Table 2 summarizes the non-LOCA transient events that are analyzed using the AREVA code system. S-RELAP5 applies to these events as well as main steamline break and steam generator tube rupture. These calculations are applied in a conservative bounding, deterministic approach.

#### 3.6.3.1 Overview

The S-RELAP5 code methodology applies to all PWR non-LOCA transients, including Main Steamline Break (MSLB) (Reference 6). S-RELAP5 is a modification of ANF-RELAP. The modifications were made primarily to accommodate large and small break LOCA modeling. S-RELAP5 remains essentially equivalent to ANF-RELAP for non-LOCA applications. A summary of the differences between S-RELAP5 and ANF-RELAP is provided in the TR, “Chapter 15 Non-LOCA Methodology for PWRs,” (EMF-2310(P)(A)). The XCOBRA-IIIC code will continue to be used to obtain the final predicted MDNBR for each transient event. That is, the core conditions from the S-RELAP5 reactor coolant system (RCS) calculations will be used as input to the existing XCOBRA-IIIC core and subchannel methodology to predict the event-specific MDNBR.

The SPC MSLB methodology uses S-RELAP5 to calculate the plant transient response to an MSLB, based on a detailed hydraulic model of the reactor coolant and steam systems and a point kinetics model of the core. Fuel failure from either departure from nucleate boiling (DNB) or CFM is assessed, based on the conditions calculated by XCOBRA-IIIC and the neutronics code for the highest powered fuel assemblies. The potential for fuel failure from DNB is assessed by comparing the calculated MDNBR to the applicable departure from nucleate boiling ratio (DNBR) safety limit. Core power, core boundary conditions, other primary system conditions, and secondary conditions are computed during the transient with S-RELAP5. The peak fuel rod LHGR which occurs during the transient is calculated using the core power from S-RELAP5 and the power distribution from the neutronics code. The potential for fuel failure from CFM is assessed by comparing the calculated peak LHGR to an LHGR limit for CFM, determined with RODEX2 or other approved fuel rod thermal-mechanical computer codes. At selected points in time during the transient, the power distribution and reactivity are computed with the neutronics code, based on the core power and core boundary conditions from S-RELAP5. At the same points in time, the PWR open lattice (i.e., open channel) core flow distribution is calculated with XCOBRA-IIIC, based on the power distribution from the neutronics code and the core boundary conditions from S-RELAP5.

Fast transients, such as Control Rod Ejection or Uncontrolled Bank Withdrawal from Hot Zero Power (HZP), are characterized by rapidly changing power levels. The power changes so rapidly that the rod surface heat flux bears little resemblance to the power. The modeling of the transient response of the fuel can result in significantly different peak heat flux and fuel temperature. This transient response depends on the mass, heat capacity, and thermal conductivity of the fuel and on the gap conductance; therefore, determining appropriate values for these parameters requires more care than for slow transients.

In a fast transient, the average core response will depend on the average fuel properties. The heat capacity of the average fuel rod depends almost entirely on the fuel temperature. The

effect of densification on the heat capacity is small (less than 2 percent) and can be ignored. Thermal conductivity depends on the fuel porosity and the fuel temperature. It can change by about 8 to 10 percent over the range of porosities experienced by regions of a fuel pellet during operation. Fuel porosity varies radially in the pellet and changes with burnup. The thermal conductivity is adjusted to account for the porosity distribution of the average core at the burnup of interest.

3.6.3.2 Biased Parameters

A subset of the parameters used in the event analysis are biased to assure that the results are conservative. The biasing of parameters is consistent with the requirements of the SRP. Certain parameters, such as the core inlet temperature and core outlet pressure are biased in the XCOBRA-IIIC calculation for the determination of MDNBR, rather than in the S-RELAP5 transient calculation. This process preserves a more realistic timing of RPS trips, but still maintains sufficient conservatism in the calculation of the MDNBR. The biasing of other parameters, such as the initial power level and core inlet flow rate, are inherently included in the XCOBRA-IIIC MDNBR analysis through data transfers from S-RELAP5 to XCOBRA-IIIC.

*Initial Core Power Level*

The initial core power level will be biased up by an amount consistent with the individual plant power level measurement uncertainty, consistent with the SRP. This bias is implemented in the S-RELAP5 calculation.

*Initial Reactor Coolant Flow Rate*

The initial reactor coolant flow rate will be set to the minimum value defined by the plant Technical Specifications. A reactor coolant flow rate measurement uncertainty will be accounted for consistent with how the minimum reactor coolant flow rate is defined in the given plant Technical Specifications. This bias is implemented in the S-RELAP5 calculation.

*Initial Reactor Coolant Temperature*

The maximum Technical Specification value or target value for core inlet temperature or vessel average temperature (depending on the particular plant) will be used to set the initial reactor coolant temperatures. This bias is implemented in the S-RELAP5 calculation. A measurement and control deadband uncertainty will not be applied to the coolant temperatures in the S-RELAP5 calculation, but will be implemented in the XCOBRA-IIIC analysis to determine a conservative MDNBR.

*Initial Reactor Pressure*

A nominal initial operating pressure will be used in the S-RELAP5 calculation. A measurement and control deadband uncertainty will be implemented in the XCOBRA-IIIC analysis to determine a conservative MDNBR.

*Initial Pressurizer Level*

Over and above the requirements of the SRP, SPC will conservatively account for initial pressurizer level measurement and control band uncertainty in the S-RELAP5 calculation for events that challenge overfilling the pressurizer. This includes the LOEL, TT, Loss of

Nonemergency AC Power to the Station Auxiliaries, LONF Flow, SGTR, and Inadvertent Operation of the ECCS That Increases Reactor Coolant Inventory events.

*Moderator Temperature Reactivity Coefficient*

The plant Technical Specification moderator temperature reactivity coefficient for BOC Hot Full Power (HFP) and HZP and EOC HFP will be used where available. Where a plant does not have a Technical Specification value, a design value will be used. The design value will be biased conservatively by 2 pcm/°F relative to a best estimate value for the conditions being considered. This bias applies to all events and is implemented in the S-RELAP5 calculation.

*Doppler Reactivity Coefficient*

The Doppler reactivity coefficient will be biased conservatively by 10 percent relative to a best-estimate value for the burnup being considered. This bias is implemented in the S-RELAP5 calculation.

*RPS Trip and Equipment Setpoints and Delay Times*

RPS and Engineered Safety System setpoints will conservatively account for uncertainties and delay times.

*Scram Characteristics*

A conservative scram curve will be used, i.e. maximum time delay with the most reactive rod held out of the core.

# 4 SAFETY ANALYSIS IMPLICATIONS

## 4.1 Overview

The scope of analyses considered in the white paper address those licensing calculations performed to demonstrate compliance with the PWR fuel generic mechanical design criteria specified in EMF-92-116(P)(A) (Reference 10). Specifically, the white paper provides a disposition for each analysis performed for each fuel product line based on the acceptance criteria and the analysis codes used. The staff has reviewed the disposition provided in Appendix II for the white paper and agrees with the determination except in the case of the Doppler coefficient. As described in Section 4.8 of this survey, the staff expects the Doppler reactivity coefficient to be sensitive to the calculation of the fuel temperature.

The scope of analyses considered according to EMF-92-116(P)(A) address those calculations that are performed to license any AREVA PWR fuel product and comprise the body of generic safety analyses. However, on a cycle-specific basis, licensing calculations are performed to establish safety and operating limits. The calculations that are performed on a cycle-specific basis are generally the transient and accident calculations. The white paper further addresses the transient codes and the LOCA analysis. Therefore, the staff finds that the scope of the white paper is sufficient to address reload licensing safety analysis.

As described in Section 4.11 of this survey, the staff identified an additional area of consideration relating to beyond design basis events. These events include anticipated transients without scram (ATWS) and station blackout (SBO). These analyses were not

addressed by the white paper. However, the staff notes that the analysis methods used to perform ATWS and SBO safety analyses rely on the TACO3 T-M methodology, and are therefore outside of the scope of the white paper which addresses the RODEX family of analysis codes only. Section 4.11 provides the staff assessment of the AREVA methods for beyond design basis accidents.

The staff discussion of the impact of fuel thermal conductivity degradation on the AREVA PWR safety analysis methods largely follows the same format provided in the white paper.

## 4.2 Center Fuel Melt (CFM)

### 4.2.1 Acceptance Criterion

The centerline temperature of the fuel pellets must remain below melting during normal operation and anticipated operational occurrences. The melting point of the fuel Includes adjustments for burnup and gadolinia content. AREVA establishes steady state and transient design LHGR peaking limits for each fuel system which protect against centerline melting using the approved RODEX2 code. The AOO compliance is verified as part of the transient analysis (Reference 10).

### 4.2.2 Evaluation

AREVA has considered the impact of fuel thermal conductivity degradation with burnup on the evaluation of center fuel melt (CFM) in RODEX2. To quantitatively evaluate the analytical impact of biases in the modeling of the conductivity, calculations were performed using both RODEX2 and COPERNIC to determine the sensitivity of the CFM limits to the model.

In this case, calculations were performed for **[** **]** These calculations demonstrate subtle differences in the predicted fuel temperatures at BOL with an increasing divergence in the predicted fuel temperature at various LHGRs for increased burnup. To establish a bounding exposure window for **[** **]** AREVA conducted analyses using COPERNIC and RODEX2 to determine the difference in predicted fuel temperature **[** **]** At near melt conditions the difference in the predicted temperatures is **[** **]**

AREVA compared this to the difference at the BOL, which was calculated to be **[** **]** between the two codes at zero burnup. On this basis, AREVA quantified a bias in the RODEX2 predicted fuel centerline temperature at **[** **]** that is attributed to the conductivity degradation. This was done by **[** **]**

AREVA **[** **]** as it is considered variation within the established uncertainties of the two calculations and, for the purpose of the current analysis, these two calculations are considered equally valid on the basis that at zero exposure they represent best estimate predictions of the fuel thermal-mechanical performance. It is only a difference above this zero exposure difference that is attributed solely to biases that are introduced due to the fuel thermal conductivity model. The staff finds that this is a reasonable approach to **[** **]** while establishing a quantitative measure of the bias using legacy and modern computer codes.

As the resultant temperatures are expected at any given LHGR to increase for increasing exposure, AREVA has determined that this bias attributed to exposure was valid up to and including **[ ]** To conservatively account for this bias a **[ ]** fuel center temperature penalty was applied to RODEX2 and CFM LHGR limits were re-calculated up to **[ ]** The conservative application of the penalty at all exposures, as well as the additional **[ ]** gives the staff reasonable assurance that the effect of conductivity biases over the exposure range have been conservatively treated even though detailed statistical evaluations were not performed to take detailed account of the biases and uncertainties associated with the two codes.

When this analysis was performed, the resultant RODEX2 CFM LHGR limit was in much better agreement with the COPERNIC result, **[ ]** the LHGR at BOL, but then under-predicting the LHGR relative to COPERNIC after approximately **[ ]**

The PWR white paper states that evaluations have been performed for those plants referencing RODEX2 methods and associated CFM limits to ensure that current operation remains within the limits that were calculated using the **[ ]** penalty. Inspection of the RODEX2 CFM LHGR limit curve and the revised LHGR limit curves presented in Figures B.3 and B.6 of the white paper show the difference in the allowable LHGR. The reduction in BOL maximum LHGR is approximately 1 kW/ft relative to a limit of 25 kW/ft or 26 kW/ft.

The staff notes that the result of imposing a **[ ]** penalty at all exposures below **[ ]** has the effect of approximately **[ ]** However, this type of penalty is **[ ]** over all exposure. Beyond **[ ]** the differences between RODEX2 calculations and the COPERNIC calculations are expected to increase. While it would be conservative to apply a penalty calculated at **[ ]** to the entire envelope, this was not done. The white paper does not address potential non-conservatism in the calculation **[ ]**

However, since the LHGR is constrained by other limits, the fuel design limit is reduced with exposure and higher temperatures may not approach the melt temperature once the LHGR limit is sufficiently low. Therefore, the staff considers the current sensitivity analysis as adequately addressing the high LHGR fuel in the core. The potential for more limiting conditions to exist at **[ ]** has not been explicitly considered. However, the staff expects that the rate of CFM margin gained by LHGR reduction will out-pace the rate of margin lost due to thermal conductivity biases increasing with exposure. In other words, the high LHGR fuel is the limiting fuel in terms of CFM and high LHGR occurs for relatively low exposure compared to the discharge exposure limit.

### 4.2.3 CFM Conclusion

The continued reliance on RODEX2 to perform T-M analyses results in the calculation of CFM limits that are not as conservative as those limits calculated using modern codes, such as COPERNIC, which takes into account the degradation of thermal conductivity with exposure. The AREVA sensitivity analyses have bounded the potential non-conservatism with a penalty to the fuel temperature of **[ ]** Since margin to CFM limits generally increases as the LHGR declines with exposure, the staff is reasonably assured that this penalty is conservative relative to the exposure range where CFM is limiting (at higher LHGR).

## 4.3 Cladding Strain

### 4.3.1 Acceptance Criterion

The transient-induced deformations must be less than one percent uniform cladding strain. For high burnups, rod exposures greater than 60,000 MWD/MTU, AREVA further restricts the uniform cladding strain to less than **[ ]** (Reference 10).

### 4.3.2 Evaluation

AREVA performed two sensitivity analyses to quantify the impact of fuel thermal conductivity degradation on cladding strain.

*Strain Assessment 1*

Assessment 1 estimates the impact of fuel thermal conductivity degradation on strain based on sensitivity studies performed using RODEX4. The white paper reports that RODEX4 calculations were used to estimate the relationship between cladding strain and fuel temperature. This relationship was then conservatively bounded using a higher value **[ ]**

While RODEX4 is not approved for PWR calculations, the staff finds that these calculations provide a reasonable basis to estimate the sensitivity of the cladding strain to temperature. Additionally, the assessment was based on a conservative value for the sensitivity that bounds the RODEX4 results. This provides the staff with reasonable assurance that the sensitivity of the strain has been bound by the calculations.

Maximum transient strains were then adjusted to account for fuel thermal conductivity degradation by adjusting strain calculations according to the conservative relationship. In the calculation, the temperature uncertainty is established by taking the **[**

**]**

The staff finds that these analysis assumptions are reasonably conservative and are expected to yield an adjusted cladding strain calculation that bounds the potential errors introduced by the fuel thermal conductivity model. The white paper presents the AOO maximum transient strain analysis results for three PWRs. The results are provided in Figure B.7. At the limiting pellet burnup, the maximum AOO strains **[**

**]**

*Strain Assessment 2*

Assessment 2 estimates the impact of fuel thermal conductivity degradation on strain based on sensitivity studies performed using RODEX2. First, the expanded benchmarking performed for RODEX2 against the extended burnup Halden database is used **[**

**]**

**[**

**]**

The effect of fuel swelling was also considered. Fuel swelling is a cumulative effect. **[**

**]**

**[**

**]**

The white paper states that calculations were performed using conservative case assumptions to bound the fuel currently operating in the fleet. The calculations considered the worst case in terms of pellet size, gap size, and cladding thickness. When these worst case parameters are combined **[** **]** maximum increases in AOO and steady strain are then calculated.

The AREVA results indicate a maximum increase in AOO and steady-state strain of **[** **]**

### 4.3.3 Cladding Strain Conclusion

The results of assessment 1 and 2 are similar in terms of the cladding strain sensitivity to the fuel thermal conductivity model. These two approaches predict sensitivity in the cladding strain analysis of between **[** **]** The white paper has compared this strain bias to available margin and concluded that existing margins are sufficient such that no plants violate the strain limits. The staff has reviewed both assessment approaches and found that they are both reasonably bounding and conservative. Therefore, increasing the steady state and transient strains that are calculated using the AREVA legacy methods **[** **]** is reasonable to address any non-conservatism introduced by the fuel thermal conductivity model in RODEX2.

## 4.4 Cladding Fatigue

### 4.4.1 Acceptance Criterion

Cycle loading associated with relatively large changes in power can cause cumulative damage which may eventually tend to fatigue failure. Therefore, AREVA requires that the cladding not exceed a cumulative fatigue usage factor of 0.67. The O'Donnell and Langer fatigue curves are used in the analysis. These fatigue curves have been adjusted to incorporate the recommended *2 or 20* safety factor. This safety factor reduces the stress amplitude by a factor of 2 or reduces the number of cycles by a factor of 20, whichever is more conservative. The fatigue curves provide the maximum allowed number of cyclic loading for each stress

amplitude. The fatigue usage factor is the number of expected cycles divided by the number of allowed cycles. The total cladding usage factor is the sum of the individual usage factors for each duty cycle (Reference 10).

### 4.4.2 Evaluation

Cladding fatigue failure is limited by the AREVA maximum cladding fatigue usage factor criteria. To assess the impact of fuel thermal conductivity on the cladding fatigue, AREVA performed analyses under **[** **]** The results of these calculations are expected to bound the potential impact on cladding fatigue arising from biases in the fuel thermal conductivity calculation. AREVA calculated a maximum increase in the cladding fatigue usage factor **[** **]** The staff finds that the **[** **]** Therefore, the staff finds that an increase in the cladding usage factor of **[** **]** is reasonably expected to bound any potential errors introduced into the analysis as a result of the fuel thermal conductivity model.

### 4.4.3 Fatigue Conclusion

On this basis, the staff finds that applying a penalty to the calculated cladding fatigue usage factor of **[** **]** is sufficient to address potential non-conservatism regarding this calculation arising from fuel thermal conductivity degradation with burnup.

## 4.5 Internal Pin Pressure

### 4.5.1 Acceptance Criterion

To prevent unstable thermal behavior and to maintain the integrity of the cladding, SPC limits the maximum internal rod pressure relative to system pressure to avoid significant hydride reorientation during cooldown conditions or depressurization conditions. When the fuel rod internal pressure exceeds system pressure, the pellet-cladding gap has to remain closed if it is already closed or it should not tend to open for steady or increasing power conditions. Outward circumferential creep which may cause an increase in pellet-to-cladding gap must be prevented since it would lead to higher fuel temperature and higher fission gas release. The maximum internal pressure is also limited to protect embrittlement of the cladding caused by hydride reorientation during cooldown and depressurization conditions (Reference 10).

### 4.5.2 Evaluation

To address the calculation of the internal pin pressure, AREVA presents the results of expanded qualification of the RODEX2 code to higher exposure data from the extended database. These data include measured fission gas release fractions and rod internal free volume. RODEX2 calculation comparisons to data indicate that the RODEX2 calculations agree well with the measurements up to an exposure of 62 GWd/MTU.

However, the calculated internal rod pressure is also a function of the gas temperature. Therefore, while the white paper provides the staff with reasonable assurance that RODEX2 predicts fission gas composition and rod internal free volume consistent with the expanded database, **[**

**]** For instance, the convective heat transfer from the pellet stack to the rod plenum volume gas may affect the rod internal pressure.

The rod internal pressure in RODEX2 is calculated according to Appendix D of Reference 3. At each calculation exposure increment the free volume is recalculated based on cladding creep, irradiation induced cladding growth, axial thermal expansion of the cladding and fuel, swelling of the fuel, pellet cracking, and densification of the fuel. The gas gap composition is determined according to the initial pressurization and the release of fission gas. The pressure is then calculated according to **[** **]** pressure equalization, and the temperature distribution in the free volume. The plenum volume gas is assumed to remain at **[**
**]**

However, the internal rod pressure is a function of the gas composition, volume, and temperature. The plenum temperature is **[**
**]** in the AREVA RODEX2 methodology. If the fuel pellet thermal conductivity is over-predicted in RODEX2, the pellet stack temperature is expected to be under-predicted. If the pellet stack temperature is increased, it is expected that **[**

**]**

### 4.5.3 Rod Internal Pressure Conclusion

Rod internal pressure limits are typically challenged near EOL. The staff cannot conclude that the assumptions in the derivation of the rod internal pressure are **[**

**]** As the bias in the conductivity is particularly exacerbated at the EOL condition, without detailed qualitative assessment, the staff cannot reach a safety determination with reasonable assurance in terms of the AREVA methodology for assessing the fuel rod internal pressure. To address this concern, quantitative analyses addressing the sensitivity of the **[** **]** and resultant sensitivity of the rod internal pressure are required.

## 4.6 Cladding Creep Collapse

### 4.6.1 Acceptance Criterion

Creep collapse of the cladding and the subsequent potential for fuel failure is avoided in the AREVA fuel system design by eliminating the formation of axial gaps. The maximum cladding circumferential creep and ovalization consistent with the time of maximum densification is computed during a creep collapse evaluation to demonstrate that no axial gaps are present. The evaluation must show that the pellet column is compact at the burnup of maximum densification (~ 6 GWd/MTU) (Reference 10).

### 4.6.2 Evaluation

The AREVA cladding creep collapse methodology is based on demonstrating that **[**
**]** The PWR white paper specifies the upper exposure of 6 GWd/MTU as the bound for cladding creep collapse. Over

this short exposure duration early in life the impact of irradiation on fuel conductivity is negligible and the RODEX2 code is not expected to under predict the fuel temperature at such low exposure.

### 4.6.3 Creep Collapse Conclusion

On the basis that this criterion is evaluated at very low exposure, the staff finds that the legacy methods remain applicable when demonstrating compliance with the cladding creep collapse criteria.

## 4.7 Cladding Oxidation, Hydriding, and Crud Buildup

### 4.7.1 Acceptance Criteria

Corrosion reduces the material thickness and results in less load carrying capacity. At normal light water reactor operating conditions, this mechanism is not limiting except under unusual conditions where high cladding temperatures greatly accelerate the corrosion rate.

The current design limit for the peak oxide thickness in the corrosion analysis is conservatively based on measured oxide thickness data. The data base also indicates that the limit on oxide thickness will automatically protect the cladding against excessive hydriding and that there is no need to evaluate the hydriding for waterside corrosion separately with its own design criteria.

There is no specific limit for crud buildup. AREVA fuel performance codes reviewed and approved by the NRC, Include the crud buildup in the fuel performance predictions. That is, the crud and oxidation models are a part of the approved models and therefore impact the temperature calculation. The end of life stress analyses include a wall thickness reduction coinciding with the limiting oxidation. This limiting oxidation is assumed to be uniform although the thickness is approximately the amount observed for the maximum nodular corrosion (Reference 10).

### 4.7.2 Evaluation

Cladding oxidation is a function of the metal-to-oxide interface temperature and of exposure time in the AREVA methodology. The metal-to-oxide temperature is calculated according to a one-dimensional thermal conduction problem. Since the conductivity affects the prediction of the fuel temperature, and not the calculation of the metal-to-oxide temperature (for a given LHGR), the staff finds that these methods are unaffected by biases in the prediction of the pellet conductivity with exposure. Therefore, the staff finds that the legacy methods remain applicable.

In the AREVA methodology, no explicit limits are established for hydriding or crud buildup. Therefore, the staff did not review the impact of conductivity on calculations determining these quantities.

### 4.7.3 Oxidation, Hydriding, and Crud Buildup Conclusions

The legacy methods are acceptable for performing analyses for oxidation.

## 4.8 Non-LOCA Transient Events

### 4.8.1 Acceptance Criteria

A rapid decrease in heat removal capacity associated with departure from nucleate boiling can potentially result in high transient temperatures in the cladding. Deterioration of mechanical properties associated with the elevated temperature may result in a loss of the fuel rod integrity. AREVA ensures that departure from nucleate boiling is precluded with 95 percent probability at 95 percent confidence. Fuel centerline melting is precluded for normal operation and anticipated operational occurrences. The transient-induced deformations must be less than one percent uniform cladding strain (Reference 10).

### 4.8.2 Evaluation

Non-LOCA safety analyses are performed using one of three analysis codes: PTSPWR2, ANF-RELAP, or S-RELAP5. This survey considers predominantly the S-RELAP5 methodology. As described in Section 3.6.3.2 of this document, the S-RELAP5 methodology considers biases in parameters to ensure conservative analysis results. The approach for S-RELAP5 is generally consistent with the approach for the other two systems codes, PTSPWR2 and ANF-RELAP. Therefore, while the staff specifically considered S-RELAP5, conclusions drawn are considered to be applicable to the other non-LOCA systems analysis codes in the suite of AREVA methods.

The PWR white paper considers these three codes in determining the potential impact on safety analysis results of fuel thermal conductivity degradation with exposure. AREVA reaches the conclusion that the conservatism inherent in the methods is sufficient to address any potential non-conservatism introduced by the phenomenon of fuel thermal conductivity degradation with exposure. AREVA notes that core average gap conductance values for the analysis are conservatively determined. The S-RELAP5 LTR for non-LOCA transients (Reference 6) states that for fast transients initiated from HZP that the gap conductance varies between several hundred and several thousand BTU/ft$^2$-hr-ºF. As the fast transient is arrested by negative Doppler worth, it was judged conservative to apply an upper bound gap conductance based on a fuel temperature that is higher than the peak average fuel temperature expected to occur during the transient.

When the fuel thermal conductivity degradation is taken into account, the pellet is expected to thermally expand and to swell to a greater extent than is predicted by RODEX2. AREVA conservatively estimated the degree of increased pellet size in its evaluation of cladding strain and cladding fatigue. Therefore, the staff expects that calculations using S-RELAP5 that rely on RODEX2 calculated fuel thermal properties are likely to under-predict the cladding gas gap conductance. While a measure of conservatism is afforded by selecting an upper bound gap conductance for fast transients, the staff notes that the highest expected fuel temperatures may be higher than previously determined based on fuel thermal conductivity degradation. On this basis, the conservatism in the determination of the gas gap conductance for fast transients is likely to be less conservative than previously understood. The degree of the conservatism afforded for fast transients has not been demonstrated quantitatively.

Aside from the gap conductance, Doppler also plays a large role in the simulation of fast transient events. According to the white paper, the impact of the fuel thermal conductivity degradation on kinetics parameters was not considered in AREVA's assessment. The Doppler reactivity coefficient is determined by the kinetics model in S-RELAP5 and combined with core average temperature calculations to determine the Doppler reactivity worth. The staff notes,

however, that the initial Doppler reactivity coefficient is expected to be sensitive to the initial fuel temperature. The staff estimated that potential bias in the Doppler reactivity coefficient that may result from errors in the predicted fuel temperature at the onset of the transient due to the fuel thermal conductivity model.

Equation (1) provides a simple order-of-magnitude calculation performed by the NRC staff to assess the magnitude of a potential bias in the Doppler coefficient. The staff considered a difference in the calculated fuel temperature based on results provided by AREVA in the white paper. The staff considered a reference fuel temperature of 1500 ºF and a temperature difference due to fuel thermal conductivity of 150 ºF. Using these figures, the staff predicts that the Doppler coefficient calculation may be non-conservative by approximately four percent. The staff, however, notes that S-RELAP5 applies a conservative 10 percent bias to the Doppler reactivity coefficient in licensing safety analysis.

$$DRC \sim \frac{1}{\sqrt{T}}$$
$$\frac{DRC_{RODEX}}{DRC_{COPERNIC}} \approx \frac{\sqrt{T_{COPERNIC}}}{\sqrt{T_{RODEX}}} = \frac{\sqrt{1500+460+150}}{\sqrt{1500+460}} = 1.04 \qquad (1)$$

Where, DRC is the Doppler Reactivity Coefficient,
T is the fuel temperature,
RODEX denotes as calculated using the RODEX conductivity model,
COPERNIC denotes as calculated using the COPERNIC conductivity model, and
460 is included to scale the temperatures to Rankine (absolute temperature scale).

The staff's Doppler coefficient bias calculation considers a relatively low reference fuel temperature, hence increasing the sensitivity of the Doppler coefficient to the temperature difference between the RODEX2 and COPERNIC calculation. The bias of 4 percent is relatively small compared with the imposed analytical bias of 10 percent. Therefore, the staff agrees with AREVA's determination in the PWR white paper that, nominally, conservatism exists in the S-RELAP5 methodology to address potential non-conservatism in the predicted Doppler coefficient. However, conservatism is applied in these coefficients to address all biases and uncertainties. An increase of the bias of 4 percent may not be adequately bounded when considered with pre-existing biases and uncertainties.

For slow transients, the plant response is less sensitive to the Doppler reactivity. This is due in part to the larger role the moderator temperature coefficient plays in the overall kinetic solution. Similarly, the slow transient response is less sensitive to the gap conductance input due to smaller temporal power gradients. Reference 6 states that S-RELAP5 calculations use average fuel rod thermal properties predicted by the fuel design code at the appropriate exposure for the cycle depletion point of interest.

The slow transient response will be mildly sensitive to the overall fuel thermal time constant. The time constant is a function of the fuel geometry, the pellet conductivity, and the gap conductance. In the determination of potential errors introduced by fuel thermal conductivity degradation with irradiation, some competing effects are observed. For example, reduced pellet thermal conductivity will result in increased pellet swelling and thermal expansion. Increased pellet size reduces the size of the gas gap and has the effect of increasing the gap

conductance. Therefore, while pellet conductivity decreases, the overall fuel thermal time constant may not decrease by the same magnitude owing to the competing effect of increased gas gap conductance.

Since the slow transient evaluations are expected to be less sensitive to errors in the fuel thermal properties, and that the effects of errors on the predicted fuel thermal time constant are partially expected to be self compensating, the staff concludes that the overall conservatism of the S-RELAP5 methodology is sufficient to address potential errors introduced by the treatment of fuel thermal conductivity and agrees with AREVA's assessment insofar as the S-RELAP5 code is used to predict the system response to develop boundary conditions for DNB or CFM calculations.

In the case of CFM, the figure of merit is the fuel centerline temperature. Therefore, while the system response may be insensitive to the pellet conductivity, the figure of merit in this particular calculation is much more sensitive to any potential non-conservatism in the treatment of the pellet thermal properties. In terms of calculating the margin to CFM limits, the standard AREVA S-RELAP5 methodology employs one of two possible approaches. In the first approach, S-RELAP5 calculations are performed to determine the maximum effective LHGR (based on heat flux) during the transient of interest. The maximum heat flux based LHGR is statically compared to CFM LHGR limits. In this case, the discussion regarding CFM in Section 4.2 of this survey is applicable to the evaluation of CFM.

S-RELAP5, unlike its predecessor codes ANF-RELAP and PTSPWR2, includes a hot spot model. The hot spot model may be used to evaluate the margin to CFM limits directly from the S-RELAP5 transient analysis. The hot spot model is often employed for fast transients to demonstrate CFM margin dynamically, though it may be used for slow transients as well.

The hot spot model includes another heat structure in the S-RELAP5 representation of the core model. This additional heat structure represents the axial segment of the hot rod with the highest local power. The heat structure is attached to the upper most portion of the reactor core model to ensure that the coolant temperature is maximized. The hot spot fuel thermal properties are generated using RODEX2 calculations that are consistent with the hot rod exposure for the cycle depletion point of interest.

When the hot spot model is used, the analysis is susceptible to under-prediction of the fuel centerline temperature. While the temperature bias calculated by AREVA using COPERNIC is reasonably expected to be conservative, an equivalent adjustment of the hot spot model results has not been proposed.

Considering other potential non-conservative biases, such as a bias in the Doppler reactivity coefficient, or gap conductance for fast transients, the use of the hot spot model to calculate the fuel centerline temperature may be non-conservative. However, the degree of bias introduced in the transient calculation using the hot spot model has not been quantitatively assessed.

### 4.8.3 Transients Conclusion

The staff considered potential non-conservative biases introduced in the reactor kinetics parameters and fuel thermal properties introduced by the RODEX2 based thermal conductivity model. The staff found that the SRELAP-5, overall, is a conservative methodology that includes

biases applied to key analysis parameters (including the moderator and fuel temperature reactivity coefficients). However, the white paper did not quantify the degree to which the fuel thermal conductivity affects the transient calculations.

When considering the fast transients, the Doppler coefficient appears to be non-conservatively calculated by approximately four percent. The gas gap conductance, while conservatively input, may not be bounding of the peak predicted fuel temperature if conductivity degradation was explicitly treated. When considering the degree of the parameter biases applied in S-RELAP5 and the potential for competing effects, these errors in the gap conductance and Doppler reactivity coefficient appear to be within the overall conservatism afforded inherently by the methodology. Without quantitative assessment, however, the staff cannot conclude with reasonable assurance that the overall conservatism is sufficient. To this end, the staff requires additional information to make a safety determination with reasonable assurance.

*Doppler Coefficient*

If the fuel thermal conductivity is over-predicted, the staff would expect that the transient analysis will be initiated at a fuel temperature that is lower than expected. As the Doppler reactivity coefficient is a function of fuel temperature, the staff would expect that the Doppler reactivity coefficient magnitude would be over-predicted. This is non-conservative for transient analyses.

*Gap Conductance*

In the transient analysis methods, the gap conductance is conservatively set to an upper bound value based on RODEX2 calculations for fuel temperatures that exceed the maximum expected fuel temperature. However, sensitivity studies performed to assess potential impacts for cladding strain and fatigue analyses have shown that accounting for the conductivity degradation may result in increased pellet swelling and thermal expansion. With larger pellet sizes, the gas gap is expected to shrink or that the contact pressure will increase.

*Centerline Melt*

When the system response predicted by S-RELAP5 is combined with LHGR limits statically, then penalties applied to the CFM limits based on COPERNIC comparisons are expected to account for fuel temperature errors associated with the fuel thermal conductivity degradation with exposure.

The staff further considered the determination of the centerline fuel temperature using the hot spot model and found that biases were not treated in the AREVA methodology. Considering that the effects of several potential non-conservatisms, the staff could not conclude that the inherent conservatism in S-RELAP5 is sufficient to bound the potential, total non-conservatism in the hot spot model calculation of the fuel centerline temperature.

The sensitivity studies described in Section 3.1 of the PWR white paper have assessed a potential non-conservatism in the prediction of CFM using RODEX2 when compared with COPERNIC.

## 4.9 Loss of Coolant Accident

Section 4.2 of the PWR white paper provides the results of the AREVA assessment of the impact of fuel thermal conductivity degradation on LOCA analyses. The white paper assessment considers small break (SB), realistic large break (RLB), and deterministic large break (DLB) LOCA. The basis for the AREVA assessment is a series of simplified calculations based on projected differences in the calculated PCT on the basis of the expected sensitivity of the fuel centerline temperature to errors or biases in the fuel thermal conductivity model.

Figure B.5 of the white paper shows that the conductivity error results in an increase in the fuel centerline temperature of approximately 600 ºF for a modest linear heat generation rate of 15 kW/ft. On the basis of the staff's engineering judgment, such an increase in the fuel temperature is expected to increase the PCT be a value greater than 50 ºF. AREVA made a presentation to the NRC staff on August 6, 2009, regarding the application of the RLBLOCA methodology to the US Evolutionary Power Reactor (EPR). The results provided in this presentation show an increase in the PCT of 24 ºF for a corresponding increase of 300 ºF in the fuel centerline temperature (Reference 12). It is not clear from the presentation if the perturbation was applied consistently through the pellet or merely for the central fuel zone.

Section 4.2 also states that the clad swelling and rupture was found to be a net benefit to PCT. This claim must be substantiated. In cases where the cladding balloons, the ballooned region may fill with fuel pellet fragments. If the analysis methodology does not account for the migration of these fuel pellets to the ballooned region during LOCA analyses that predict cladding rupture, then the PCT results may be non-conservative. The claims made in the white paper require consideration of the collection of fuel fragments in the balloon region.

Section 3.4 of the white paper states that the generation of pin pressure in the LOCA analysis is conservatively bounded by increasing the LHGR operating history by five percent. However, when the fuel conductivity model is biased, the pellet temperature is under-predicted and the resultant fuel pin pressure calculation may be in error. AREVA has not demonstrated that the five percent bias in the LHGR operating history is sufficiently conservative to address concerns regarding fuel pellet conductivity. Any non-conservatism in the fuel pin pressure may result in the mischaracterization of fuel pin rupture during the LOCA blowdown stage.

Therefore, the staff cannot reach conclusions regarding the conservatism of the LOCA analyses on the basis of the information provided in the PWR white paper. Particularly, the simplified analyses are inconsistent with the staff experience in terms of LOCA PCT sensitivity studies. Additionally, claims are made regarding the conservatism of the LOCA methodology in regards to the modeling of fuel pin rupture. These claims have not been quantitatively substantiated.

## 4.10 Steady State Nuclear Analysis

### 4.10.1 Acceptance Criteria

Standard Review Plan (SRP) Section 4.3 specifies the nuclear design acceptance criteria, which are based on meeting the following requirements from Appendix A to 10 CFR Part 50:

- GDC 10, "Reactor Design," requiring the reactor design (reactor core and associated reactor coolant, control, and protection systems) to ensure that the specified acceptable fuel design limits (SAFDLs) are not exceeded during any condition of normal operation, including AOOs

- GDC 11, “Reactor Inherent Protection,” requiring a net negative prompt feedback coefficient in the power operating range

- GDC 12, “Suppression of Reactor Power Oscillations,” requiring that power oscillations that can result in conditions exceeding SAFDLs not be possible or be reliably and readily detected and suppressed

- GDC 13, “Instrumentation and Control,” requiring a control and monitoring system to monitor variables and systems over their anticipated ranges for normal operation, AOOs, and accident conditions

- GDC 20, “Protection System Functions,” requiring, in part, a protection system that automatically initiates a rapid control rod insertion to ensure that SAFDLs are not exceeded as a result of AOOs

- GDC 25, “Protection System Requirements for Reactivity Control Malfunctions,” requiring protection systems designed to ensure that SAFDLs are not exceeded for any single malfunction of the reactivity control systems

- GDC 26, “Reactivity Control System Redundancy and Capability,” requiring, in part, a two independent reactivity control systems of different design principles that are capable of holding the reactor subcritical under cold conditions

- GDC 27, “Combined Reactivity Control Systems Capability,” requiring, in part, a control system designed to control reactivity changes during accident conditions in conjunction with poison addition by the ECCS

- GDC 28, “Reactivity Limits,” requiring, in part, that the reactivity control systems be designed to limit reactivity accidents so that the reactor coolant system boundary is not damaged beyond limited local yielding

### 4.10.2 Evaluation

AREVA performs steady-state calculations using the nuclear design methods to demonstrate compliance with several of the GDC specified in SRP Section 4.3. The staff reviewed the CASMO-3/NEMO methods used to perform these steady-state calculations for evaluating compliance with the relevant GDC.

This section of the survey deals specifically with steady-state calculations. Therefore, this section does not address all of the nuclear design GDC.

Compliance with GDC 10 and 20 is demonstrated by performing transient evaluations to ensure that SAFDLs are not exceeded as a result of AOOs. Steady-state calculations are also performed to demonstrate that normal operation does not result in the SAFDLs being exceeded; however, transient conditions are generally most limiting in terms of the relevant SAFDLs.

Compliance with GDC 12 is demonstrated by performing stability analyses. Xenon induced instabilities perpetuate with very long periods, making sensitivities in the fuel rod thermal dynamics irrelevant to these types of analyses.

Compliance with GDC 28 is demonstrated by analysis of the consequences of a postulated reactivity initiated accident (RIA). Section 4.8 of this survey addresses the non-LOCA transients.

To demonstrate compliance with the requirements of GDC 11, calculations are performed to determine the magnitude and nature of the reactivity feedback coefficients. These include the Doppler, moderator temperature, and void reactivity coefficients. These calculations are performed to demonstrate that the reactivity coefficients ensure inherent negative feedback.

While the calculation of the fuel temperature may impact the calculated Doppler reactivity coefficient at HFP, the Doppler coefficient remains negative. Calculation of other reactivity feedback parameters remains unaffected by the fuel thermal conductivity. Therefore, the staff considers the use of legacy methods to demonstrate compliance with GDC 11 to be acceptable.

GDC 25 requires that the reactivity control system be capable of maintaining the reactor in a subcritical condition, assuming a single malfunction of the system. GDC 26 requires a secondary control system capable of shutting down the reactor. GDC 27 requires that these combined systems have sufficient capability to shut down the core under accident conditions. Several NEMO calculations demonstrate compliance with GDC 25, 26, and 27. The purpose of these calculations is to demonstrate sufficient capability of the reactivity control systems to ensure shutdown.

The calculations performed to demonstrate compliance with these GDC are cold shutdown margin calculations. NEMO methods are used to determine the core criticality under various control states (e.g., all rods in). As the core reactivity increases with decreasing temperature and increased water density, these calculations are performed at limiting cold conditions. Therefore, the model used to determine the fuel temperature at power conditions is not necessary to assess the cold shutdown margin. Thus, the staff finds that the fuel thermal conductivity model does not affect the calculations used to demonstrate compliance with these GDC. Consequently, the staff finds the use of legacy methods to perform these calculations to be acceptable.

### 4.10.3 Conclusions

Legacy methods remain acceptable to perform steady state nuclear analyses to demonstrate compliance with the applicable general design criteria.

## 4.11 Beyond Design Basis Events

### 4.11.1 Risk Insights

In its survey of analysis methods employed for beyond design basis accidents the staff considered any risk insights gathered from probabilistic risk assessments (PRAs) that have been performed for specific plants. The staff referenced the PRAs that were done for Surry Unit 1 and Sequoyah Unit 1 as part of NUREG/CR-4550 (References 14 and 15, respectively). The results of the specific PRAs are provided below. On the basis of the PRAs, the staff has determined that the SBO and LOCA events are large contributors to the overall plant risk. Surry is a three loop Westinghouse PWR with a dry, sub-atmospheric containment. Sequoyah is a four loop Westinghouse PWR with an ice-condenser containment. The staff considers the risk insights gleaned from these PRAs to be reasonably representative of general trends in the PWR fleet.

4.11.1.1 Surry 1

One of the major purposes of the Surry analysis was to provide an updated perspective on our understanding of the risks from the plant relative to the results of the WASH-1400 analysis (Reference 19). It has been determined that changes to the plant design and its operating procedures, the evolution of Probabilistic Risk Assessment (PRA) methodology, and an increasing understanding of severe accidents have all had an impact on the perspectives on the dominant risks for Surry. This study concludes that station blackout (loss of all AC power) accidents are the dominant contributors to core damage. They account for approximately two-thirds of the internal events core damage frequency.

This result is partially due to certain features of the Surry electric power systems, which are discussed below, and may not be applicable to other plants. The station blackout analysis for this study was much more rigorous than that of WASH-1400. All aspects of electric power modeling, plant response modeling, and development of event probabilities have been significantly improved over those used in WASH-1400. The higher frequencies for station blackout are considered a more accurate assessment of the event than previous analyses.

Loss of coolant accidents inside containment are the second most dominant accident group, accounting for approximately one-seventh of internal events core damage frequency. The prominence of this accident group is greatly reduced over the results of WASH-1400, which was completed in 1975. This is due to three factors: (1) improved operator procedures and training which direct operator intervention to mitigate LOCAs at an early stage and provide direction for coping with subsequent system failures, (2) the installation of several cross ties between the two Surry units that provide back-up systems to cope with emergency core cooling system failures, and (3) improved understanding and knowledge of containment systems performance, which has led to less constraining success criteria for containment systems. As with the station blackout conclusions, some of these improvements are specific to the Surry plant and may not be applicable to other PWRs.

Loss of coolant accidents in interfacing systems outside of containment represent a moderate contribution to core damage, at four percent of the total, but are important contributors to risk because they may represent a direct release path to the environment. The understanding of these events is relatively unchanged since WASH-1400. In the ensuing years, the calculated frequency has been reduced due to more frequent check valve test intervals, and recently increased due to the inclusion of common cause failures in the quantification.

The general reactor transient category (other than loss of offsite power) accounts for six percent of core damage frequency. This category was a negligible contributor in WASH-1400. However, the current understanding and phenomenology of loss of feedwater events is more comprehensive than in WASH-1400.

Anticipated transients without scram (ATWS) contribute approximately four percent to internal events core damage frequency. Their frequency has been reduced from that calculated in WASH-1400, due in part to equipment modifications required by the ATWS Rulemaking and by improved procedures and operator training for this event.

Steam generator tube rupture (SGTR) also accounts for approximately four percent of core damage frequency. This event was not analyzed in WASH-1400. To date, however, at least five steam generator tube failure events have been large enough to require an Emergency Core

Cooling System (ECCS) response and mitigation. Tube ruptures are a form of interfacing LOCAs, and thus may be very important to risk, even though they do not dominate core damage frequency.

4.11.1.2 Sequoyah 1

One of the major purposes of the Sequoyah analysis was to provide an updated perspective on our understanding of the risks from the plant relative to the results of the Reactor Safety Study Methodology Applications Program (RSSMAP) analysis. In the study, loss of coolant accidents inside containment are the most dominant accident group, accounting for approximately two-thirds of total core damage frequency. The prominence of this accident group is very similar to the results of RSSMAP, which was completed in 1979 (Reference 20).

The study concludes that station blackout (loss of all AC power) accidents are the next most dominant contributors to core damage. They account for one-fourth of the total core damage frequency. Station blackout sequences were not important in RSSMAP. The station blackout analysis for this study was much more rigorous than that of RSSMAP. All aspects of electric power modeling, plant response modeling, and development of event probabilities have been significantly improved over those used in RSSMAP. The higher frequencies for station blackout are considered a more accurate assessment of the event than that contained in previous analyses.

Loss-of-coolant accidents in interfacing systems outside of containment represent a small contribution to core damage at one percent of the total, but are important contributors to risk because they may represent a direct release path to the environment. The understanding of these events is relatively unchanged since RSSMAP. In the ensuing years, the calculated frequency has been reduced due to more frequent check valve test intervals, and recently increased due to the inclusion of common cause failures in the quantification.

The general reactor transient category (other than loss of offsite power) accounts for four percent of core-damage frequency. This category was about the same contributor in RSSMAP, although RSSMAP did not recognize the viability of feed and bleed core cooling, whereas this study does.

Anticipated transient without scram (ATWS) accidents contribute approximately three percent to total core damage frequency. ATWS events were an insignificant contributor in RSSMAP. ATWS became more important in this study due to considerations of the moderator temperature coefficient and of human error associated with failure of emergency boration.

Steam generator tube rupture (SGTR) accounts for approximately three percent of core damage frequency. This event was not analyzed by RSSMAP. To date, however, at least five steam generator tube failure events have been large enough to require an Emergency Core Cooling System (ECCS) response and mitigation. Tube ruptures are a form of interfacing LOCAs, and thus may be very important to risk, even though they do not dominate core damage frequency.

### 4.11.2 Station Blackout

AREVA LOCA analysis methods are described in Sections 3.6.1 and 3.6.2 of this document. The impact of fuel thermal conductivity degradation with exposure is discussed in Section 4.9.

On the basis of low risk significance, the staff did not specifically survey the AREVA ATWS analysis methods. This section discusses primarily the risk significance and analysis methods for SBO.

The term "station blackout" refers to the complete loss of alternating current electric power to the essential and nonessential switchgear buses in a nuclear power plant. Station blackout therefore involves the loss of offsite power concurrent with turbine trip and failure of the onsite emergency AC power system, but not the loss of available ac power to buses fed by station batteries through inverters or the loss of power from "alternate ac sources." Based on 10 CFR 50.63, all licensees and applicants are required to assess the capability of their plants to maintain adequate core cooling and appropriate containment integrity during a station blackout and to have procedures to cope with such an event.

The specific regulatory criterion in 10 CFR 50.63 states that the reactor core and associated coolant, control, and protection systems, including station batteries and any other necessary support systems, must provide sufficient capacity and capability to ensure that the core is cooled and appropriate containment integrity is maintained in the event of a SBO for the specified duration.

A station blackout accident, a complete loss of all unit AC power, is a hypothetical case where all unit power is lost except the unit Class 1E DC system batteries. Following the loss of all unit AC power, the control rods are inserted into the core via gravity and the turbine valves close. The loss of station power also results in a reactor coolant pump trip, a main feedwater pump trip, and a condensate booster pump trip. The resulting heat removal mismatch is the driving force behind the dynamics of the station blackout transient.

The complete loss of all unit AC power causes the reactor, turbine, RC pumps, main feedwater pumps, and condensate booster pumps to trip. Decay heat is removed by natural circulation and the main steam safety valves (MSSVs) and atmospheric dump valves (ADVs). Heat removal by natural circulation with steam relief through the MSSVs and ADVs is adequate to prevent occurrence of fuel damage and prevent excessive RCS pressures and temperatures. The feedwater for decay heat removal is supplied by the Emergency Feedwater System.

SBO analyses are performed to demonstrate acceptable reactor system behavior during the coping period under postulated SBO conditions. The purpose of these analyses is to demonstrate that for the specified duration that the capabilities of the plant equipment are sufficient to cool the core and maintain the containment within pressure and temperature design limits.

In terms of performing these analyses, RG 1.155 specifies guidance that the decay heat must be calculated assuming operation at 100 percent power for at least 100 days (Reference 17). The decay heat is then predicted using an appropriate ANS standard. Since the calculation is performed over a period of 2 to 16 hours, the specific transient evolution of the reactor power during the SCRAM is inconsequential and the transient evolution of the cladding heat flux may acceptably be modeled using a quasi-steady state approach. Therefore, the results of the analysis, while sensitive to the decay heat, are unlikely to be sensitive to fuel thermal models which dictate the short term transient cladding heat flux response.

For SBO, AREVA utilizes the RELAP5/MOD2-B&W methodology (Reference 18). While this code was developed by B&W based on the RELAP5/MOD2 code developed by the Idaho National Engineering Laboratory, it is used by AREVA to analyze SBO and other beyond design

basis events (such as ATWS) for various PWR plants. RELAP5/MOD2-B&W is coupled with the TACO3 T-M performance code to predict fuel temperature and stored energy (Reference 18). According to the white paper, TACO3 calculations were not evaluated as part of the sensitivity studies (Reference 11). Therefore, the sensitivity of RELAP5/MOD2-B&W to potential errors in the fuel thermal conductivity was not evaluated as part of the AREVA study.

The staff expects that the sensitivities of RELAP5/MOD2-B&W are similar to those for S-RELAP5 on the basis of common ancestry. However, this has not been quantitatively demonstrated. Further the TACO3 performance against the extended fuel performance database has not been presented to the staff. However, the staff likewise expects the performance of the TACO3 code to be similar to the performance of other codes contemporary to its development (e.g., RODEX2).

The TACO3 code was approved by the staff on August 14, 1989 (Reference 21). The fuel thermal conductivity model in TACO3 is similar to the MATPRO-11 and Lyons equations with a porosity correction factor. The conductivity expression in TACO3 is not a function of the pellet exposure. The staff reviewed the TACO3 qualification database in terms of fuel temperature. These data include various open literature and industry data. The staff specifically reviewed the maximum considered fuel exposure in the database. The five highest exposure integral test rods achieved burnups of: 18.173, 14.349, 14.186, 13.973, and 10.647 GWd/MTU (Reference 21). This range of exposure qualification is far below the burnup limit of 62 GWd/MTU.

Without comparison to the extended database the staff assessment of TACO3 performance is conjectural. However, there are substantial similarities between the RODEX2 and TACO3 conductivity models. Additionally, significant deviation in measured and predicted temperatures is not expected in the exposure range below 15 GWd/MTU. The experimental data used to develop and qualify the RODEX2 and TACO3 codes considers similar exposure ranges (20-22 GWd/MTU in the case of RODEX2 (Reference 3)). On this basis, the staff expects that the TACO3 and RODEX2 codes will exhibit similar biases in the prediction of fuel temperature with increasing exposure. Therefore, the staff expects that parameters such as initial stored energy will be under-predicted in SBO calculations performed using RELAP5/MOD2-B&W. This under-prediction is in the non-conservative direction.

The staff notes that, over the coping period (several hours), differences in stored energy do not contribute significantly to the plant response. Plant dynamics for long periods are dominated by the heat balance, which is driven by the decay heat more so than the initial stored energy.

## 5 SUMMARY OF CONCLUSIONS

The staff has reviewed the results of sensitivity analyses provided in the AREVA PWR white paper (Reference 11). The staff has agreed that the scope of the white paper addresses those analyses potentially non-conservatively impacted by the fuel thermal conductivity degradation effect. In many cases, AREVA has determined penalties to be applied to particular safety analyses to bound this non-conservatism. These penalties are summarized in Table 3. The staff agrees with the basis for these penalties and agrees that these penalties are sufficiently conservative to generically address the effect of fuel thermal conductivity degradation with exposure. However, application of these penalties has not been formalized through revision to the approved licensing methodology.

The staff has many significant questions regarding the assessment performed for the LOCA analysis. To this end, the staff has developed specific questions that would allow the staff to reach some final determination regarding the impact of fuel thermal conductivity degradation on the LOCA analysis results. These questions, and others, are reported at the end of this section.

In the case of transients, the staff indentified potential areas of concern. Particularly, calculations performed for CFM using the hot spot model may be non-conservative. Calculations that assess CFM using the static approach and established LHGR limits remain acceptable when appropriate penalties are applied to the LHGR limit. Also, the staff found that the Doppler reactivity, while not considered in the PWR white paper, may be over-estimated. In its own assessment the staff concluded that the potential bias in the Doppler reactivity coefficient is bounded by inherent conservatism in the SRELAP-5 methodology. To this end, the staff has developed specific questions that would allow the staff to reach a final safety determination regarding the transient analysis.

*Staff Questions Regarding the White Paper Studies*

**1. Loss of Coolant Accident**
Section 4.2 of the PWR white paper addresses loss of coolant accident (LOCA) peak cladding temperature (PCT) analyses. The staff has several questions regarding the LOCA analysis sensitivity to fuel conductivity.

*(a) Fuel Temperature*
Figure B.5 shows conductivity error is worth approximately a 600 ºF increase in fuel centerline temperature at 15 kW/ft. This would result in a substantial increase in fuel average temperature and is expected to increase PCT by more than 50 ºF. Please show the radial temperature profile at the hot spot using the original model with the conductivity error compared to the temperature profile with the corrected conductivity. Furthermore, the AREVA presentation to the staff on August 6, 2009, showed that PCT increases only 24 ºF for an increase in centerline temperature of 300 ºF. This result is not consistent with past experience and a much higher PCT would be expected. As such, please provide a comparison of the temperature versus time for the limiting break at the PCT location. Please also show the fuel rod radial temperature profiles for the uncorrected and correct fuel conductivity cases. Also show the fuel centerline temperature, fuel average temperature and clad surface temperatures versus time at the PCT location for the uncorrected and corrected cases. Please also provide the fuel average temperatures at the PCT location at the end of blowdown, start of refill, and start of reflood. What are the results of the study at end of cycle burnup stored energies and pin pressures? What is the impact of the end of life burn-up on fuel centerline and fuel average temperatures? Please provide the information requested above at end of life conditions.

*(b) Cladding Swelling and Rupture*
Section 4.2 states that clad swelling and rupture was found to be a net benefit to PCT. Did the analysis include a model to allow the ruptured region to fill with fuel pellet fragments? Test data shows that following rod rupture, the ballooned region fills with fuel pellet fragments. If such a model is not included, then an analysis needs to be performed to show the impact of fuel pellet fragments filling the ballooned region to substantiate the conclusions given in Section 4.1. If such a model was included in the evaluation, please describe the details of this methodology.

*(c) Pin Pressure*
Section 4.3 states that the generation of pin pressure is bounding due to the conservative five percent increase in the assumed linear heat generation rate (LHGR). The higher power level will increase the pellet average temperature and result in a higher pin pressure. Please provide the results and show that the increased LHGR produces a higher pin pressure than the case with a corrected fuel thermal conductivity model (which would have the attendant higher stored energy). Please also show that blowdown ruptures do not occur with the corrected fuel conductivity of the five percent higher LHGR. Since blowdown ruptures can occur at end of life conditions, please show that blowdown rupture does not occur at the end of life (which includes exposures greater than 32 GWd/MTU).

**2. Rod Internal Pressure**
Section 3.4 of the PWR white paper addresses fission gas release and rod internal volume qualification. However, the internal rod pressure is a function of the gas composition, volume, and temperature. The plenum temperature is **[**
**]** in the AREVA RODEX2 methodology. If the fuel pellet thermal conductivity is over-predicted in RODEX2, the pellet stack temperature is expected to be under-predicted. If the pellet stack temperature is increased, it is expected that **[**

]

**3. Transients**

Section 4.1 of the PWR white paper addresses the thermal-hydraulic non-LOCA transient analysis methods. The staff has several clarifying questions regarding the non-LOCA transient methodology.

*(a) Doppler Coefficient*

If the fuel thermal conductivity is over-predicted, the staff would expect that the transient analysis will be initiated at a fuel temperature that is lower than expected. As the Doppler reactivity coefficient is a function of fuel temperature, the staff would expect that the Doppler reactivity coefficient magnitude would be over-predicted. This is non-conservative for transient analyses. Please assess any potential bias in the initialization of the Doppler reactivity coefficient or transient calculation of Doppler worth.

*(b) Gap Conductance*

In the transient analysis methods, the gap conductance is conservatively set to an upper bound value based on RODEX2 calculations for fuel temperatures that exceed the maximum expected fuel temperature. However, sensitivity studies performed to assess potential impacts for cladding strain and fatigue analyses have shown that accounting for the conductivity degradation may result in increased pellet swelling and thermal expansion. With larger pellet sizes, the gas gap is expected to shrink, or that the contact pressure will increase. Please verify that there is sufficient conservatism in the selected gas gap conductance to bound the pellet size increase predicted in other sensitivity studies.

*(c) Hot Spot Model*

S-RELAP5 includes a hot spot model. This hot spot model may be used with RODEX2 thermal properties to directly assess the centerline fuel melt during AOOs in the standard AREVA methodology. However, the sensitivity studies performed in Section 3.1 of the white paper have assessed a potential non-conservatism in the prediction of CFM using RODEX2 when compared with COPERNIC. Please address equivalent potential non-conservatism in the S-RELAP5 calculation for transient CFM analyses.

## 6 References


1. BAW-10180P-A, Revision 1, "NEMO -- Nodal Expansion Method Optimized," March 1993.

2. ANF-90-145(P)(A), Volume I, Volume II, Supplement 1, Revision 0, “RODEX3 Fuel Rod Thermal-Mechanical Response Evaluation Model, Volume I Theoretical Manual, Volume 11 Thermal and Gas Release Assessments, Advanced Nuclear Fuels Corporation,” April 1996.

3. XN-NF-81-58(P)(A), Revision 2, and Supplements 1 & 2, “RODEX2 Fuel Rod Thermal-Mechanical Response Evaluation Model,” Siemens Power Corporation, March 1984.

4. BAW-10247(P), Revision 0, “Realistic Thermal-Mechanical Fuel Rod Design Methodology for Boiling Water Reactors,” August 2004.

5. EMF-2328(P), Revision 0, “PWR Small Break LOCA Evaluation Model, S-RELAP5 Based,” Siemens Power Corporation, January 2000.

6. EMF-2310(P), Revision 0, “SRP Chapter 15 Non-LOCA Methodology for Pressurized Water Reactors,” FRAMATOME ANP, May 2001.

7. EMF-2103(P)(A), Revision 0, "Realistic Large Break LOCA Methodology for Pressurized Water Reactors," April 2003.

8. BAW-10231P-A, Revision 1, “COPERNIC Fuel Rod Design Computer Code,” January 2004.

9. XN-76-8, “RODEX: Fuel Rod Thermal-Mechanical Response Evaluation Code,” February 1977.

10. EMF-92-116(P)(A), Revision 0, “Generic Mechanical Design Criteria for PWR Fuel Designs,” February 1999.

11. AREVA Letter, Gardner, R., to NRC, “Informational Transmittal Regarding Requested White Papers on the Treatment of Exposure Dependent Fuel Thermal Conductivity Degradation in Legacy Fuel Performance Codes and Methods,” dated July 14, 2009 (ADAMS Accession No. ML092010160).

12. Presentation made to the NRC staff, “U.S. EPR Design Certification Review RLBLOCA Methodology,” AREVA NP, Inc., August 6, 2009. (ADAMS Accession No. ML092220686).

13. NUREG-0800, “Standard Review Plan for the Review of Safety Analysis Reports for Nuclear Power Plants,” Section 4.3, “Nuclear Design,” U.S. Nuclear Regulatory Commission, March 2007 (ADAMS Accession No. ML070740003).

14. NUREG/CR-4550, Volume 3, Revision 1, “Analysis of Core Damage Frequency: Surry, Unit 1, Internal Events,” April 1990 (ADAMS Accession No. ML0705804531).

15. NUREG/CR-4550, Vol. 5, Rev. 1, “Analysis of Core Damage Frequency: Sequoyah, Unit 1 Internal Events,” April 1990 (ADAMS Accession No. ML070580077).

16. NUREG-0800, “Standard Review Plan for the Review of Safety Analysis Reports for Nuclear Power Plants,“ Section 8.4, “Station Blackout,” dated March 2007. (ADAMS Accession No. ML070550061).

17. NRC Regulatory Guide 1.155, “Station Blackout”, August 1988.

18. BAW-10164-A, Revision 4, "RELAP5/MOD2-B&W, An Advanced Computer Program for LOCA and Non-LOCA Transient Analysis," June 2007.

19. NUREG-75/014 (WASH-1400), “Reactor Safety Study: an Assessment of Accident Risks in U.S. Commercial Nuclear Power Plants,” October 1975.

20. NUREG/CR-1659/1 of 4 (RSSMAP), “Reactor Safety Study Methodology Applications Program: Sequoyah #1 PWR Power Plant,” February 1981.

21. BAW-10162P-A, “TACO3 – Fuel Pin Thermal Analysis Computer Code,” October 1989.

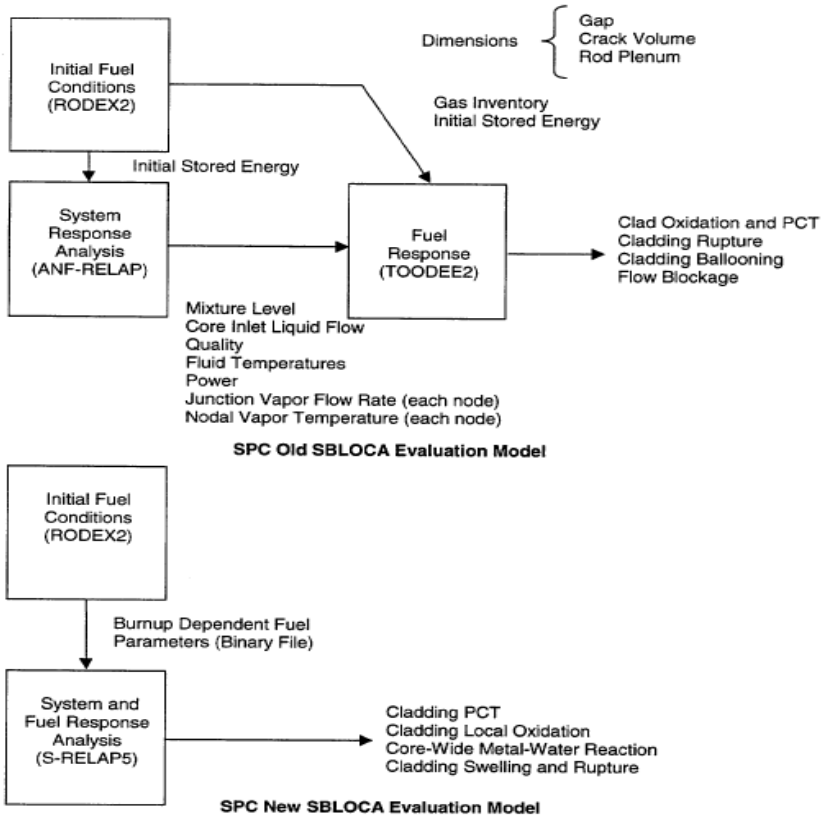


**Figure 5: Schematic of Old and New SPC Small Break Models**

Table 2: Non-LOCA Transient Events (EMF-2310(P)(A))

| Event | SRP No. | Typical Condition |
|---|---|---|
| CATEGORY 15.1 – Increase in Heat Removal by the Secondary System | | |
| Decrease in Feedwater Temperature | 15.1.1 | II |
| Increase in Feedwater Flow | 15.1.2 | II |
| Increase in Steam Flow | 15.1.3 | II |
| Inadvertent Opening of Steam Generator (SG) Relief/Safety Valve[a] | 15.1.4 | II |
| Steam System Piping Failures Inside and Outside Containment[a] | 15.1.5 | IV |
| CATEGORY 15.2 – Decrease in Heat Removal by Secondary System | | |
| Loss of Outside External Load (LOEL) | 15.2.1 | II |
| Turbine Trip (TT) | 15.2.2 | II |
| Loss of Condenser Vacuum | 15.2.3 | II |
| Closure of Main Steam Isolation Valve (MSIV) | 15.2.4 | II |
| Steam Pressure Regulator Failure | 15.2.5 | II |
| Loss of Non-Emergency AC Power to the Station Auxiliaries | 15.2.6 | II |
| Loss of Normal Feedwater (LONF) Flow | 15.2.7 | II |
| Feedwater System Pipe Breaks Inside and Outside Containment | 15.2.8 | IV |
| CATEGORY 15.3 – Decrease in Reactor Coolant Flow Rate | | |
| Loss of Forced Reactor Coolant Flow (LOCF) | 15.3.1 | II |
| Flow Controller Malfunctions | 15.3.2 | II |
| Reactor Coolant Pump (RCP) Rotor Seizure | 15.3.3 | IV |
| RCP Shaft Break | 15.3.4 | IV |

| Event | SRP No. | Typical Condition |
|---|---|---|
| CATEGORY 15.4 – Reactivity and Power Distribution Anomalies | | |
| Uncontrolled Rod Cluster Control Assembly (RCCA) Bank Withdrawal From a Subcritical or Low Power Startup Condition | 15.4.1 | II |
| Uncontrolled RCCA Bank Withdrawal at Power | 15.4.2 | II |
| RCCA Misoperation | 15.4.3 | |
| Dropped Rod/Bank | 15.4.3.1 | II |
| Single Rod Withdrawal | 15.4.3.2 | III |
| Statically Misaligned RCCA | 15.4.3.3 | II |
| Startup of an Inactive Loop at an Incorrect Temperature | 15.4.4 | II |
| Chemical and Volume Control System (CVCS) Malfunction That Results in a Decrease of Boron Concentration (Boron Dilution) | 15.4.6 | II |
| Inadvertent Loading and Operation of a Fuel Assembly in an Improper Position (Misloaded Assembly) | 15.4.7 | III |
| Spectrum of Rod Ejection Accidents | 15.4.8 | IV |
| CATEGORY 15.5 – Increase in Reactor Coolant Inventory | | |
| Inadvertent Operation of the Emergency Core Cooling System (ECCS) That Increases Reactor Coolant Inventory | 15.5.1 | II |
| CVCS Malfunction That Increases Reactor Coolant Inventory | 15.5.2 | II |
| CATEGORY 15.6 – Decreases in Reactor Coolant Inventory | | |
| Inadvertent Opening of a Pressurizer Pressure Relief Valve | 15.6.1 | II |
| Radiological Consequences of the Failure of Small Lines Carrying Primary Coolant Outside Containment | 15.6.2 | II |
| Radiological Consequences of Steam Generator (SG) Tube Failure | 15.6.3 | IV |

Table 3: Summary of Penalties Applied to AREVA PWR Safety Analyses Potentially Affected by Fuel Thermal Conductivity Degradation with Irradiation

| Analysis | Penalty |
|---|---|
| Centerline Fuel Melt | [ ] |
| Cladding Strain | [ ] |
| Cladding Fatigue | [ ] |
| Internal Pin Pressure | [ ] |
| Cladding Creep Collapse | No penalty, analyzed at very low exposure |
| Cladding Oxidation | No penalty, unaffected by fuel pellet conductivity |
| Transients | Potentially non-conservative for CFM calculations using the hot spot model, Doppler reactivity appears to be overestimated |
| LOCA | Insufficient information was provided in the white paper for the staff to reach any conclusions regarding LOCA with reasonable assurance. The calculations are likely non-conservative. |
| Station Blackout | Initial stored energy under-predicted. Safety analysis is likely to be insensitive in the long-term. |