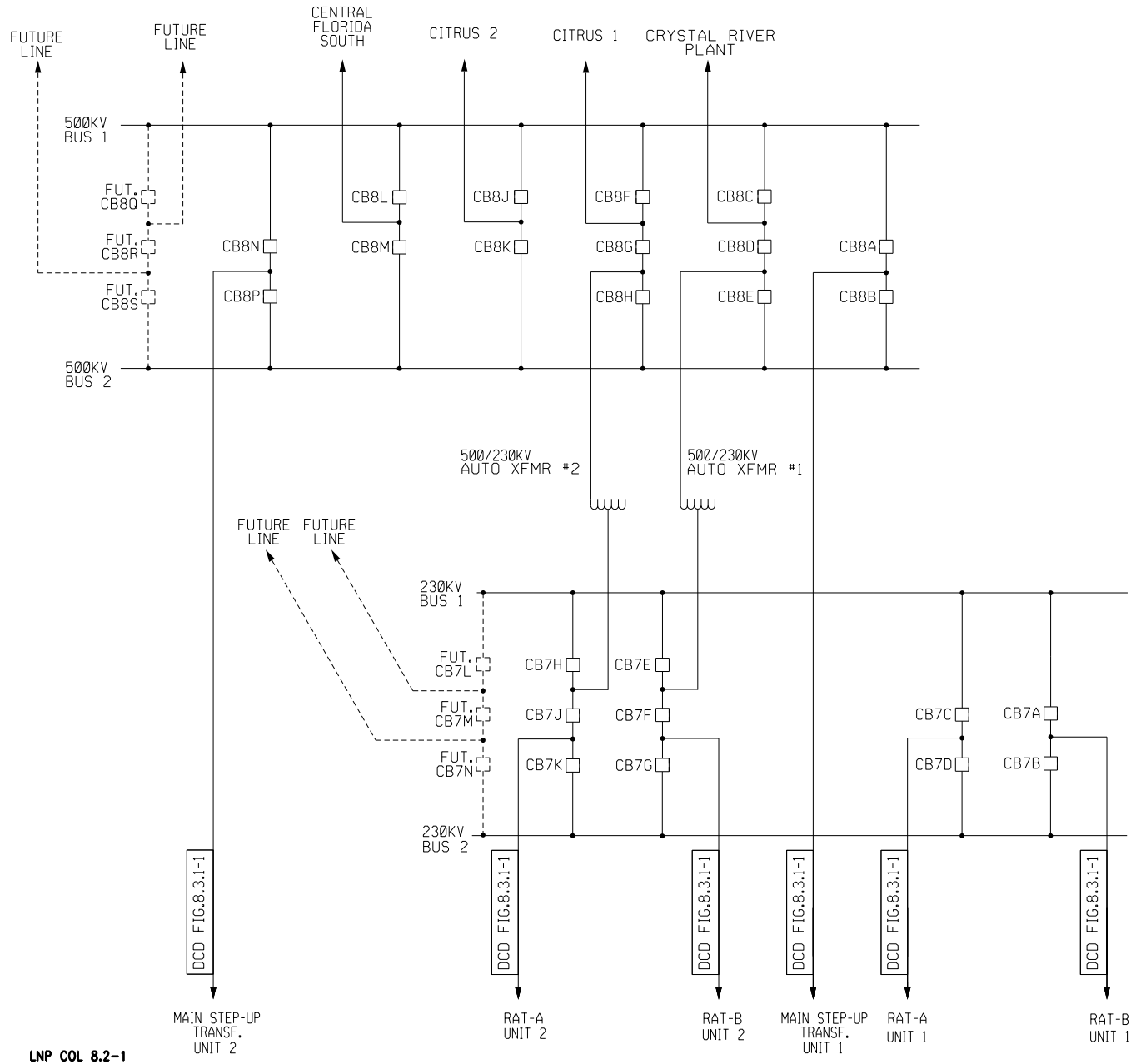

REFERENCE:

WESTINGHOUSE AP1000 DCD FIG. 8.3.1-1
AC POWER STATION ONE LINE DIAGRAM

LNP COL 8.2-1

Progress Energy Florida
Levy Nuclear Plant
Units 1 and 2
Part 2, Final Safety Analysis Report

Off-Site Power System One-Line Diagram LNP 1 and LNP 2

FIGURE 8.2-201

Rev. 1