Lewis Sumner
Vice President
Hatch Project Support

Southern Nuclear Operating Company, Inc.
40 Inverness Parkway
Post Office Box 1295
Birmingham, Alabama 35201

Tel 205.992.7279
Fax 205.992.0341

9904080079
A7659:024 –
A7660:012

SOUTHERN COMPANY
Energy to Serve Your World™

April 6, 1999

Docket Nos. 50-321
50-366

HL-5752

U. S. Nuclear Regulatory Commission
ATTN: Document Control Desk
Washington, D. C. 20555

Edwin I. Hatch Nuclear Plant
Request for License Amendment
Spent Fuel Pool Storage Expansion

Ladies and Gentlemen:

In accordance with the provisions of 10 CFR 90, as required by 10 CFR 50.59(c)(1), Southern Nuclear Operating Company (SNC) hereby requests changes to the Technical Specifications for Plant Hatch Units 1 and 2, Appendix A to Operating License Nos. DPR-57 and NFP-5, respectively. The proposed changes will allow Plant Hatch to increase the storage capacity of each unit's Spent Fuel Pool (SFP). This will be accomplished by placing a single high density storage rack containing 168 storage spaces in an 8 by 21 array in the Contaminated Equipment Storage Area (CESA) of each unit's pool where currently no racks exist. The new storage racks will be manufactured by Holtec International.

Long term plans for spent fuel storage at Plant Hatch include the utilization of dry cask storage at a separate facility to be located on the plant site. To ensure an adequate amount of time is allowed to complete cask procurement and fabrication, facility construction, and all supporting licensing activities, more storage space may be needed in the Hatch 1 and Hatch 2 SFPs. Currently, Plant Hatch no longer has combined space in its SFPs to allow for a simultaneous full core discharge from both units' reactors. Without the Holtec rack addition, full core discharge capability (560 spent fuel assemblies) from only one reactor will be lost following the Hatch 1 Fall 2000 refueling outage. This determination considers the shared arrangement of the Hatch 1 and Hatch 2 SFPs which are interconnected via a transfer canal. Therefore, the additional SFP storage space will serve to enhance plant performance since it will allow adequate time to plan and implement dry cask storage, will maximize the flexibility needed by plant operations for fuel handling activities, and will minimize the risk associated with lost power generation that could possibly occur due to a shortage of storage capacity.

AP01

9904080079 990406
PDR ADOCK 05000321
P PDR

Change ltr env –

1/4

Enclosure 1

Edwin I. Hatch Nuclear Plant
Request for License Amendment
Spent Fuel Pool Storage Expansion

Bases for Change Request

Background

The Hatch 1 and Hatch 2 Spent Fuel Pools (SFPs) are located in the common refueling floor area of the Hatch 1 and Hatch 2 Reactor Buildings at elevation 228 feet and can accept fuel from either unit via a transfer canal that interconnects the two pools. Both unit's SFPs are currently equipped with high density spent fuel storage racks supplied by General Electric. The Hatch 1 SFP is licensed to store 3181 fuel assemblies and the Hatch 2 SFP is licensed to store 2845 fuel assemblies which yields a total combined licensed storage capacity of 6026. However, the actual installed combined storage capacity of both pools is only 5926. The difference results from ten storage locations in each unit's SFP to accommodate defective fuel which are not presently installed, and 80 additional storage locations in the Hatch 2 SPF that were to be provided by four original plant construction standard type (swing bolt hold down design) storage racks but were never installed.

Considering the combined installed storage capacity of both units' SFPs (5926 storage spaces), space currently does not exist to allow for a full core discharge from both units' reactors. Accordingly, space to accommodate a full core discharge from only one reactor will be lost following the Hatch 1 Fall 2000 refueling outage. Long term plans for spent fuel storage at Plant Hatch include the utilization of dry cask storage at a separate facility to be located on the plant site. To ensure an adequate amount of time is allowed to complete cask procurement and fabrication, facility construction, and all supporting licensing activities, more storage space may be needed in the Hatch 1 and Hatch 2 SFPs.

At this time it has been determined that a total rerack of the Hatch 1 and Hatch 2 SFPs is not needed. Instead, utilization of the Contaminated Equipment Storage Area (CESA) in each of the units' SFPs where racks do not currently exist should provide the space margin needed to facilitate dry cask storage at Plant Hatch. The CESA in each pool will be occupied by a single high density rack containing 168 storage spaces in an 8 by 21 array supplied by Holtec. Accordingly, the Hatch 1 SFP licensed storage capacity will increase to a total of 3349 (3181 +168) fuel assemblies. However, the Hatch 2 SFP licensed storage capacity will only increase to a total of 2933 (2845+88) fuel assemblies because the new Holtec rack will "replace" the four original standard type storage racks containing a total of 80 storage spaces that were also to be located in the Unit 2 CESA. The design and licensing basis requirements for the existing General Electric high density racks as previously reviewed and approved by the NRC in Hatch 1 and Hatch 2 License Amendment Nos. 74 and 15, respectively, dated April 21, 1980, are not impacted by the Holtec rack addition.

Authorization to rerack the SFPs at Plant Hatch as they currently exist, with a configuration of high density storage racks manufactured by General Electric, was granted by the Nuclear Regulatory Commission (NRC) on April 21, 1980, with issuance of Hatch 1 and Hatch 2 License Amendment Nos. 74 and 15, respectively. This action allowed Hatch 1 to increase its storage capacity to 3181 fuel assemblies and Hatch 2 to increase its storage capacity to 2845 fuel assemblies as stipulated in Section 4.3.3 of the Hatch 1 and Hatch 2 Technical Specifications. Accordingly, the design and licensing basis requirements for the existing General Electric high density racks as previously reviewed and approved by the NRC will not be impacted by the proposed SFP storage expansion.

With the Holtec rack addition, the Hatch 1 licensed storage capacity will increase by 168 for a total of 3349 fuel assemblies. However, the current Hatch 2 licensed value of 2845 includes the storage capacity of four original plant construction standard type (swing bolt hold down design) spent fuel storage racks that were never installed. These racks were also to be located in the Hatch 2 CESA and would have accommodated a total of 80 fuel assemblies. Consequently, the Holtec rack addition will "replace" these racks and only provide a net increase of 88 fuel assemblies to the Hatch 2 licensed spent fuel storage capacity for a total of 2933.

Enclosure 1 provides a description and technical bases for the specific proposed changes to the Hatch 1 and Hatch 2 Technical Specifications necessary to implement the spent fuel storage expansion. Enclosure 2 provides information supporting the determination that the proposed changes do not involve a significant hazards consideration. Enclosure 3 provides the page change instructions and the proposed revised and corresponding marked-up Technical Specification pages. Enclosure 4 provides an environmental assessment which concludes no environmental impact statement needs to be prepared in connection with the issuance of the proposed Technical Specification changes.

Enclosure 5 provides a safety analysis for Plant Hatch titled "Spent Fuel Pool Storage Expansion," which was prepared in accordance with the NRC guidance contained in "OT Position for Review and Acceptance of Spent Fuel Storage and Handling Applications" dated April 14, 1978, as amended on January 18, 1979. This document contains information proprietary to Holtec as designated by the shaded information. Enclosure 6 provides a non proprietary version of the document for public viewing in which the shaded information has been removed and so noted as being proprietary. In accordance with 10 CFR 2.790, Enclosure 7 provides Holtec's affidavit which attests to the proprietary nature of certain information they provided in support of this effort as shown in Enclosure 5 and requests that it be withheld from public disclosure.

The most recent NRC approval of a license amendment request for use of Holtec high density racks was granted earlier this year to Callaway. The NRC similarly approved license amendment requests last year at Waterford 3 and Vogtle 1. License amendment requests for Fitzpatrick, Nine Mile Point 1, Vermont Yankee, and Wolf Creek are still pending NRC review and approval.

- ANSI ANS-8.17-1984, Criticality Safety Criteria for the Handling, Storage and Transportation of LWR Fuel Outside Reactors.

NRC guidelines [4.1.2] and the applicable ANSI standards specify that the maximum effective multiplication factor, k_{eff}, including uncertainties, shall be less than or equal to 0.95. The infinite multiplication factor, k_{inf}, is calculated for an infinite array, neglecting neutron losses due to leakage, and therefore is a higher and more conservative value. In the present criticality safety evaluation, the design basis criterion was assumed to be a k_{inf} of less than 0.95, which is more conservative than the limit specified in the regulatory guidelines.

To ensure that the true reactivity will always be less than the calculated reactivity, the following conservative design criteria and assumptions were made:

- Moderator in the Spent Fuel Pool (SFP) is un-borated water at a temperature (4°C) that results in the highest reactivity.
- In all cases (except for the assessment of certain abnormal/accident conditions where neutron leakage is inherent), the infinite multiplication factor, k_{inf}, was used rather than the effective multiplication factor, k_{eff} (i.e., neutron loss from radial and axial leakage neglected).
- Neutron absorption in minor structural members is neglected, i.e., spacer grids are analytically replaced by water.
- The racks were assumed to be fully loaded with the most reactive fuel authorized to be stored in the facility.
- In-core depletion calculations assume conservative operating conditions and an allowance for voids during in-core BWR operations.
- Conservatively, uniform initial average enrichments were used for all fuel pins in a fuel assembly instead of distributed enrichments.

The Holtec BWR spent fuel storage racks are designed to accommodate any and all of the fuel assemblies listed in Table 4.3.1 with a maximum planar-average enrichment of 4.8 wt.% ^{235}U. Each fuel assembly type was analyzed independently to determine its acceptability in

SHADED REGIONS DESIGNATE PROPRIETARY INFORMATION

Accordingly, the criteria for spent fuel to be acceptable for storage in the Holtec spent fuel storage racks at Plant Hatch are the following:

- Fuel assemblies with a planar SCCG k_{inf} of 1.33 or less, with a maximum planar-average enrichment less than or equal to 4.8 wt.% ^{235}U, or
- Fuel assemblies which have a maximum planar-average enrichment of 3.3 wt.% ^{235}U or less, regardless of burnup, gadolinia, or the planar SCCG k_{inf}.

These criteria will be incorporated into Hatch 1 and Hatch 2 FSAR Sections 10.3.5 and 9.1.2, respectively. These FSAR sections presently contain similar type acceptance criteria for fuel assemblies currently stored in the existing General Electric (GE) high density racks.

4.3 Input Parameters

Design parameters for all BWR fuel assemblies analyzed are summarized in Table 4.3.1. In this table, the various assemblies within a lattice type (7x7, 8x8, 9x9, or 10x10) are designated using fuel vendor's nomenclature (e.g., GE3, GE4, etc.). Where variations in the channel thickness exist for a given fuel assembly type, bounding values were conservatively used. The design basis BWR fuel assembly, used for uncertainty calculations, is the 10x10 array of BWR fuel rods (the GE12/GE14 assembly) containing UO_2 clad in Zircaloy (92 fuel rods with 2 water rods).

4.3.1 Holtec Storage Racks

The BWR storage cells, are composed of stainless steel walls with a single fixed neutron absorber panel, Boral, in a 0.082 inch channel with a sheathing thickness of 0.035 inches. Stainless steel boxes are arranged in an alternating pattern such that the connection of the box corners form storage cells between those of the stainless steel boxes. These cells are located on a lattice spacing of 6.25 ± [redacted] inch. The 0.075 ± [redacted] thick steel walls define a storage cell which has a 6.058 ± [redacted] inch nominal inside dimension. The Boral absorber has a thickness of 0.075 ± 0.006 inch and a nominal B-10 areal density of 0.0216 g/cm² (minimum

SHADED REGIONS DESIGNATE PROPRIETARY INFORMATION

of [redacted] g/cm^2). The width of the Boral absorber panels is 5.00 ± [redacted] inches. Boral panels are not needed or used on the exterior walls of the storage racks as they are facing non-fueled regions (i.e., pool walls).

Figure 4.3.1 shows a detailed illustration of the calculational model of the nominal spent fuel storage cell, including dimensions. The calculational model consists of a single cell with reflective boundary conditions through the centerline of the composite of materials between the cells, thus simulating an infinite array of storage cells. The composite wall thickness shown on Figure 4.3.1 is half the thickness of the total composite of materials (i.e., [0.075 + 0.035 + 0.0.082]/2 = 0.192/2 = 0.096 inches). The thickness of the Boral panels in the model is the half-thickness (0.075/2 = 0.0375 inches).

4.4 Analytical Methodology

4.4.1 Reference Design Calculations

The primary criticality analyses of the Holtec high density spent fuel storage racks were performed with the two-dimensional multigroup transport theory computer code CASMO-4 [4.4.1 - 4.4.3], using the 40-group cross-section library. Since CASMO-4 can not be directly compared to critical experiments, a calculational bias is not available for CASMO-4. Instead, independent verification calculations were made with the continuous energy Monte Carlo computer code MCNP4a [4.4.4] and the multigroup Monte Carlo code KENO5a [4.4.5]. The MCNP4a calculations used cross-section data based on ENDF/B-V, as distributed with the code [4.4.4]. The KENO5a calculations used the 238-group cross-section library, which is based on ENDF/B-V data and is distributed as part of the SCALE-4.3 package [4.4.6], in association with the NITAWL-II program [4.4.7], which adjusts the uranium-238 cross sections to compensate for resonance self-shielding effects. Benchmark calculations, presented in Appendix 4A, indicate a bias of 0.0009 ± 0.0011 for MCNP4a and 0.0030 ± 0.0012 for KENO5a, evaluated at the 95% probability, 95% confidence level. The bias and uncertainty were included in the CASMO-4 validation as discussed in Section 4.5.1.

SHADED REGIONS DESIGNATE PROPRIETARY INFORMATION

CASMO-4 was also used for burnup calculations and for evaluating small reactivity increments associated with manufacturing tolerances and SFP temperature changes. In the geometric model used in the calculations, each fuel rod and its cladding were described explicitly and reflecting boundary conditions were used in the axial direction and at the centerline of the Boral and steel plates between storage cells. These boundary conditions have the effect of creating an infinite array of storage cells in all directions. Unless otherwise specified, all calculations assumed the channel was present. Calculations are presented in Section 4.5.2.6 to verify that removing the channel results in a decrease in reactivity.

MCNP4a was used to determine the reactivity effects of eccentric fuel positioning and channel bulging. KENO5a was used to calculate the reactivity effect of fuel misloading outside the racks and the drop accident. Monte Carlo calculations inherently include a statistical uncertainty due to the random nature of neutron tracking. To minimize the statistical uncertainty of the calculated reactivity, a minimum of 1,000,000 neutron histories are accumulated in each calculation.

4.4.2 Burnup Calculations and Uncertainties

Burnup calculations were performed with CASMO-4, using the restart option to describe the spent fuel in the storage cell. For these calculations, all Xenon which was present during the depletion calculations was analytically removed for the restart calculations.

4.4.2.1 BWR Fuel Burnup Calculations

CASMO-4 was used to perform in-core depletion calculations (hot-core operating conditions with an allowance for voids) and to calculate the k_{inf} in the SCCG. Since critical experiment data with spent fuel is not available for determining the uncertainty in depletion calculations, an allowance for uncertainty in reactivity was assigned based upon other considerations. Assuming the uncertainty in depletion calculations is less than 5% of the reactivity decrement

SHADED REGIONS DESIGNATE PROPRIETARY INFORMATION

from 0 burnup (fresh fuel) to the burnup corresponding to a k_{inf} in the SCCG of 1.33, a burnup dependent uncertainty in reactivity was assigned. This reactivity allowance is 0.0043 Δk, and is statistically combined with the uncertainties from the manufacturing tolerances.

Since the fuel vendor also calculates the k_{inf} in the SCCG with different analytical techniques, a reactivity allowance for possible differences between vendor calculations and Holtec calculations is applied. Conservatively, a flat reactivity allowance of 0.01 Δk is used. This value is not statistically combined with the other uncertainties but rather added directly to the calculated k_{inf}. The allowance is intended to account for any other potential differences (e.g., Gd rod locations) between the SCCG calculations performed by Holtec and those performed by the fuel vendors.

4.4.3 Effect of Axial Burnup Distribution

For BWR fuel storage, there is no reactivity penalty due to the axial burnup distribution. BWR fuel contains integral burnable absorber (gadolinia, Gd_2O_3), and thus, the reactivity increases as a function of burnup to a maximum (or peak) that depends on the Gd_2O_3 loading and initial fuel enrichment (the peak typically occurs at a burnup between 12 and 15 GWD/MTU). Unlike PWR fuel, the reactivity is not greatest for fresh unburned fuel. Consequently, the fuel storage acceptance for BWR fuel assemblies is defined based on the peak reactivity, recognizing that fuel of all other burnups will have a lower reactivity. Furthermore, at the peak reactivity over burnup, the ends of the assemblies still contain Gd_2O_3 and hence have a lower reactivity. In addition, the axial blankets of lower-than-average enrichment results in low reactivity at the ends and precludes the existence of highly reactive ends. Thus, under this type of criterion, there is no penalty due to the axial burnup distribution. The decrease in reactivity associated with burnups beyond the peak are not credited, and thus, any positive reactivity effect of the axial burnup distribution at a high burnup (much greater than the burnup at which the peak occurs) are of no importance since the reactivity is very low and clearly much less than the peak.

SHADED REGIONS DESIGNATE PROPRIETARY INFORMATION

4.5.2.1 Boron Loading Variation

The Boral absorber panels used in the storage cells are nominally 0.075 inch thick, with a B-10 areal density of 0.0216 g/cm^2. The manufacturing tolerance limit in B-10 content, including both thickness and composition tolerances assures that the minimum B-10 areal density will not be less than [redacted] g/cm^2. Differential CASMO-4 calculations indicate that this tolerance limit results in an incremental reactivity uncertainty of ± 0.0048 Δk.

4.5.2.2 Boral Width Tolerance Variation

The reference storage cell design uses a Boral panel width of 5.0 inches. The tolerance on the Boral width is ± [redacted] inch. Calculations using CASMO-4 showed that this tolerance corresponds to a ± 0.0022 Δk uncertainty.

4.5.2.3 Tolerance in Cell Lattice Pitch and Inner Box Dimension

Since the fuel storage racks do not utilize a water gap between storage cells, the manufacturing tolerance on the inner box dimension is the same as the tolerance on the storage cell lattice pitch. The pitch for the Holtec racks is 6.25 ± [redacted] inches. This corresponds to an uncertainty in reactivity of ± 0.0040 Δk, as determined with CASMO-4.

4.5.2.4 Stainless Steel Thickness Tolerances

The nominal thickness of the stainless steel box for Holtec racks is 0.075 ± [redacted] inches. The maximum positive reactivity effect of the expected stainless steel thickness tolerances was calculated to be ± 0.0006 Δk using CASMO-4.

4.5.2.5 Fuel Enrichment and Density Variation

The maximum bundle planar-average fuel enrichment is 4.8 wt.% ^{235}U. The uncertainty on this enrichment is conservatively assumed to be [redacted] wt.% ^{235}U. CASMO-4 calculations show that the reactivity allowance for this tolerance is ± 0.0039 Δk.

SHADED REGIONS DESIGNATE PROPRIETARY INFORMATION

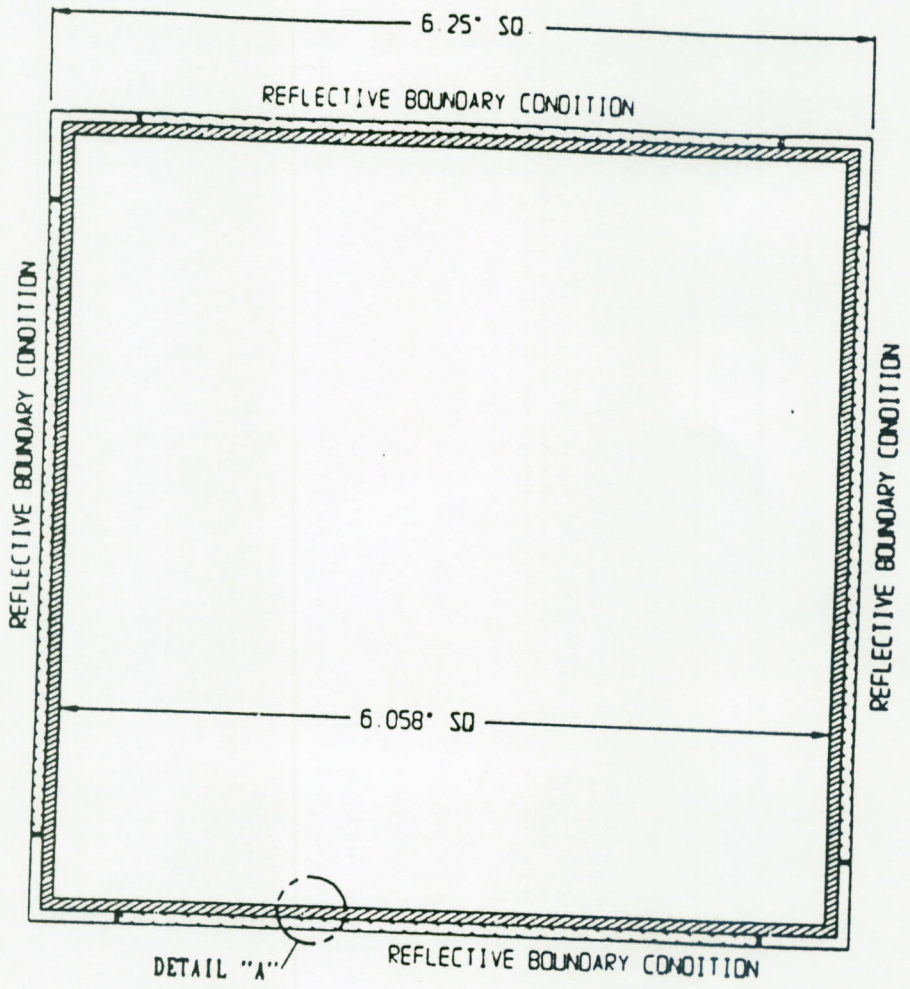

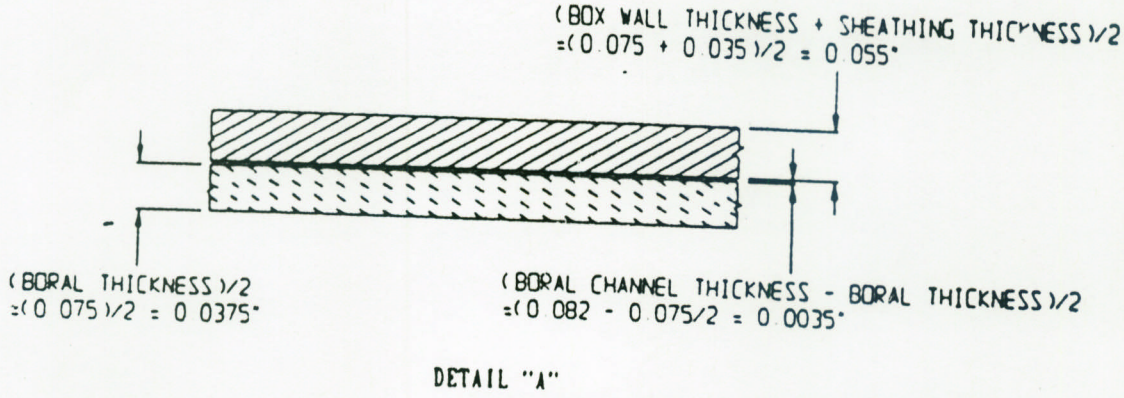

Figure 4.3.1: A Cross-Sectional View of the Calculational Model Used for the Rack Analysis (NOT TO SCALE).

3.0 MATERIAL, HEAVY LOAD, AND CONSTRUCTION CONSIDERATIONS

3.1 Introduction

Safe storage of nuclear fuel in the pools requires that the materials utilized in the rack fabrication be of proven durability and compatible with the pool water environment. Likewise, all activities in the rack installations must comply with the provisions of NUREG-0612 [3.1.1] to eliminate the potential of construction accidents. This section provides a synopsis of the considerations with regard to long-term service life and short-term construction safety.

3.2 Structural Materials

The following structural materials are utilized in the fabrication of the Holtec spent fuel racks:

a. ASME SA240-304 for all sheet metal stock

b. Internally threaded support legs - ASME SA240-304

c. Externally threaded support spindle - ASME S[illegible]4-630 precipitation hardened stainless steel (heat treated to 1100°F)

d. Weld material - ASME Type 308

3.3 Poison Material (Neutron Absorber)

In addition to the structural and non-structural stainless material, the racks employ Boral™, a patented product of AAR Manufacturing, as the neutron absorber material. A brief description of Boral, and its pool experience list follows.

Boral is a thermal neutron poison material composed of boron carbide and 1100 alloy aluminum. Boron carbide is a compound having high boron content in a physically stable

SHADED REGIONS DESIGNATE PROPRIETARY INFORMATION

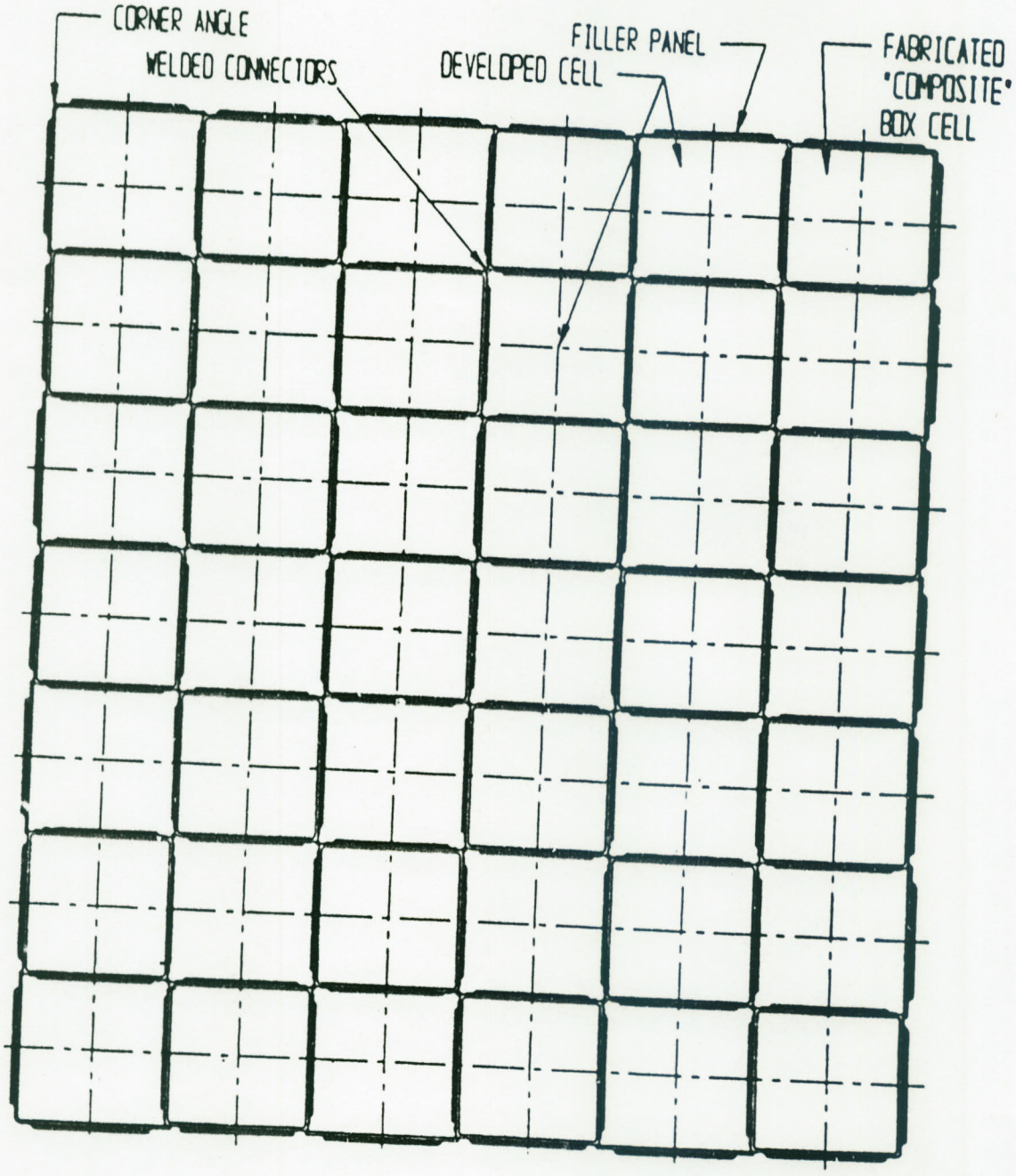

Figure 2.6.3
Typical Array of Storage Cells
(Non-flux Trap construction)

(Note: The number of cells shown is not intended to depict actual rack cells)

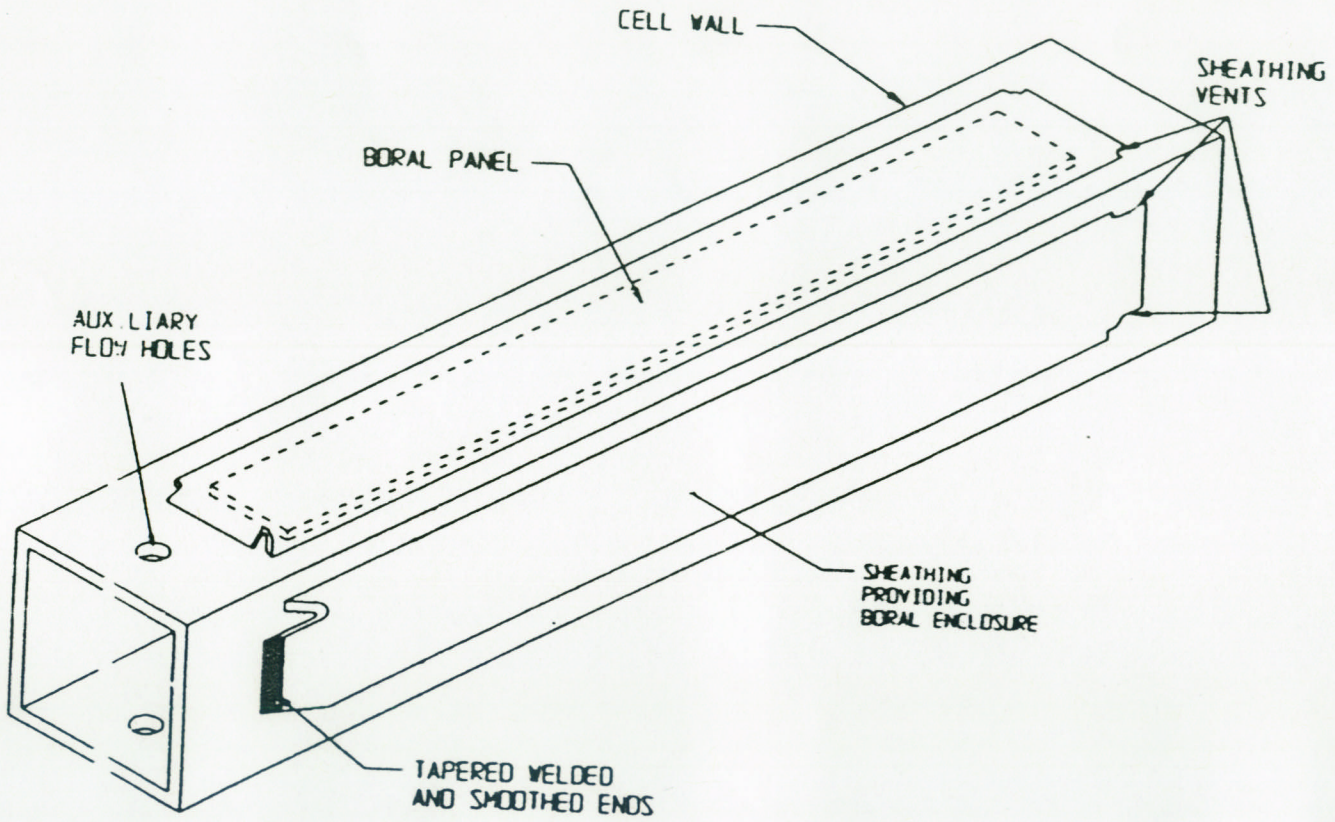

Figure 2.6.2
Composite Box Assembly