REVISS

REVISS Services
Technical and Manufacturing Group

Test Report No. RTR 245

3981/01
1.0m Punch Test – Angled Inverted

Author:		**Reviewer:**	
Name	P J G Robbins	Name	D W Rogers
Signature		Signature	
Date	02/07/09	Date	03/07/09

1. PURPOSE AND SCOPE

The purpose of this document is to record the performance of the R7021 specimen, 3981/01, in an IAEA drop test for Type B radioactive materials package designs. The full test programme is discussed, justified and detailed in the test plan, RTM 118.

2. DESCRIPTION

2.1 DESIGN

The outer components of the R7021, a cylindrical, insulated jacket, a top shield (with energy absorbing structures and insulation), and a pallet, are constructed predominantly from carbon steel. There is also a stainless steel grill around the top of the jacket to restrict access to hot surfaces. The flask is a stainless steel, lead shielded, upright, finned cylinder with a conventional plug type closure in the top and thermal insulation built into its top and bottom corners. The closure has a vent point and the cavity has a drain tube to allow the flask to be operated in ponds as well as in cells. The cylindrical cavity holds encapsulated radioactive material (solid cobalt metal) in a basket. Although primarily intended to carry Special Form capsules, the flask has a containment system as it may also be used to carry non-Special Form encapsulated cobalt. The closure and the vent and drain plugs are therefore equipped with testable O-ring seals. In addition, to prevent the migration of coarse solids outside the shielded volume, the top of the drain tube is fitted with a mesh filter and a spring gasket is used to seal the gap under the closure around the top of the cavity.

2.2 TEST

1.0 m Punch Test – Angled Inverted (Drop 11, RTM 118). Drop II test for Type B packages (paras. 656 & 727(b), TS-R-1).

2.3 TEST INTENT

To generate the maximum damage to the lowermost top shield cone prior to the 9.0m angled inverted drop test.

2.4 PASS/FAIL CRITERIA

The pallet, top shield and jacket shall be secure in order for the specimen to continue to the next test. For internal inspection see IR 0675.

2.5 TARGET

The R8085 target (Drg. No. R8085/001) consists of a 50mm thick steel plate bonded to reinforced concrete of dimensions 4m square x 3m deep set flush with the ground. The total mass, 113000 kg, exceeds the RTM 118 minimum requirement of 45000 kg by 150%.

The punch (Drg. No. R8099/002) met RTM 118 requirements and was securely fastened to the target with four M24 screws.

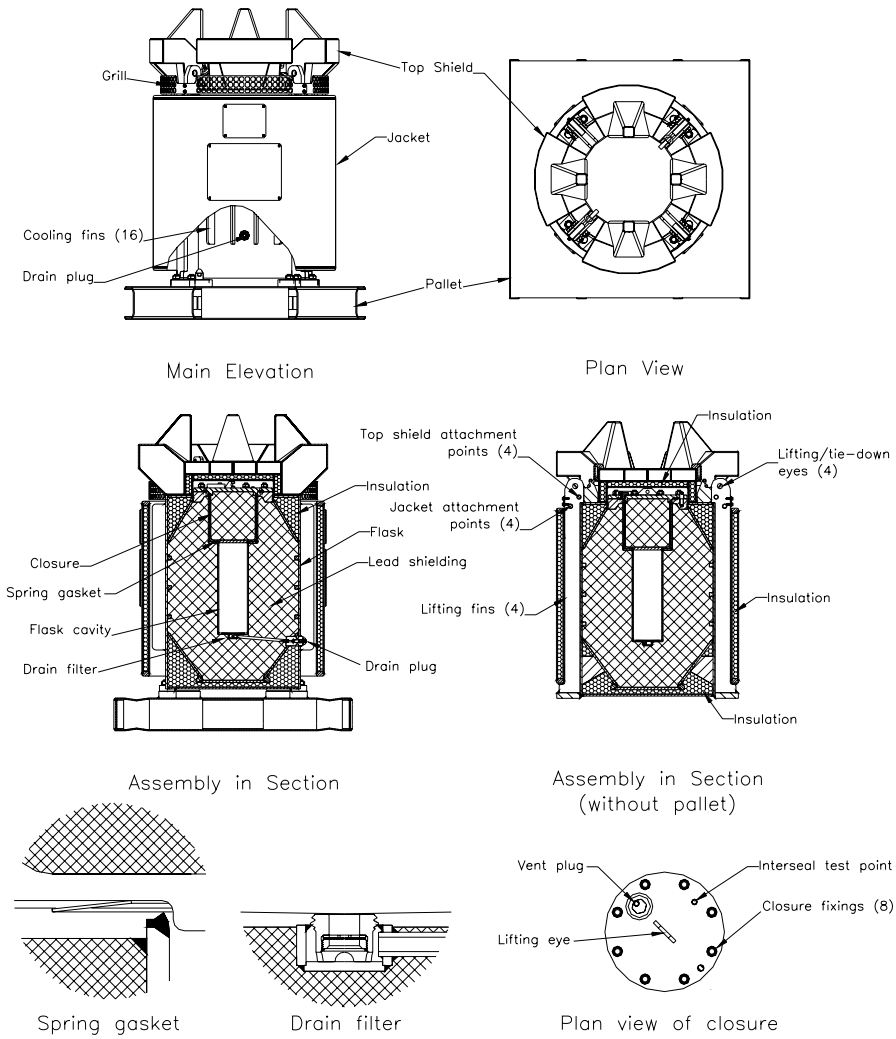

Figure 1: R7021 Constructional Details

2.6 SPECIMEN DETAILS (SEE ALSO IR 0674)

- Identity: 3981/01.
- Contents: A basket containing 48 stainless steel rods.
- Assembly:
  - The specimen was re-assembled in accordance with the test plan, RTM 118, (closure, vent plug and drain plug remaining undisturbed from previous test) with pallet 3981/01, top shield 3981/02 and new jacket and top shield shoulder bolts (Figures 2, 4 & 5). All components fitted cleanly, although there was initially a small gap under one of the flask feet indicating it had been deformed upwards (Figure 3).
  - The flask-to-pallet fixings were tightened to a torque of 150 N.m. The slight gap under the flask foot closed up.
  - The jacket and top shield fixings were tightened to a torque of 80 N.m. The jacket was orientated with the vertical seam weld next to the drain plug in readiness for

punch testing later.

  - The grill fixings were tightened to a torque of 20 N.m.

- Weight: 4374 kg.
- Existing Damage: See IR 0674 & RTR 244.

2.7 TEST PROCEDURE

As the weight of the container assembly was less than the design maximum gross weight (4500kg), the drop height was increased pro rata to compensate. The test height was therefore (4500/4374) x 1.0 = 1.030m.

The test was conducted in accordance with OP 225. The specified angle was 17º ± 2º from the vertical. All key actions were recorded on the test record sheet (attached).

3. RESULTS

- The test was executed correctly (Figures 6-9). The angle measured for the drop was 73.8º from the horizontal, i.e. 16.2º from the vertical (Figure 10).
- The pallet, jacket, top shield and grill remained securely attached (Figure 11).
- The impact cone crushed to a height of 180mm above inner surface of top shield (Figures 12, 13 & 17).
- There was minor damage to the supporting segment, inner surface and edge of the pallet from secondary impacts (Figures 14-16).
- The punch showed good impact location and no significant deformation (Figure 18).
- There was no other externally visible damage.

See Illustrations for photographic record.

4. CONCLUSIONS

The R7021 test specimen, 3981/01, was fit to continue to the next test.

5. REFERENCES

- IR 0674: 3981/01 Assembly Prior to Accident Conditions Drop Testing, REVISS Services (UK) Ltd.
- IR 0675: 3981/01 Inspection After Accident Conditions Drop Testing, REVISS Services (UK) Ltd.
- OP 225: Drop Testing Procedure, REVISS Services (UK) Ltd.
- R8085/001 issue B: Drop Test Target, REVISS Services (UK) Ltd.
- R8099/002 issue A: Drop Test Punch, REVISS Services (UK) Ltd.
- RTR 244: 1.0m Punch Test – Angled Inverted, REVISS Services (UK) Ltd.
- TS-R-1: Safety Standards Series, Regulations for the Safe Transport of Radioactive Material 1996 Edition (As amended 2003), IAEA, Vienna.

6. ATTACHMENTS

RTR 245: Drop Test Checklist, REVISS Services (UK) Ltd.

7. ILLUSTRATIONS

page
Figure 2: Assembly of flask onto pallet 3981/01 6
Figure 3: Initial gap under foot 6
Figure 4: Replacement jacket and top shield fasteners 7
Figure 5: Assembly of the jacket on to flask..... 7
Figure 6: Test action sequence – Angle 1 8
Figure 7: Test action sequence – Angle 2 9
Figure 8: Above target 10
Figure 9: 1.030m above target..... 10
Figure 10: Inclinometer readings (2 planes) 11
Figure 11: After drop..... 11
Figure 12: Damage to top shield 12
Figure 13: Damage to top shield cone..... 12
Figure 14: Damage to top shield (secondary impact) 13
Figure 15: Damage to top shield (secondary impact) 13
Figure 16: Damage to pallet (secondary impact) 14
Figure 17: Damage to cone 14
Figure 18: Condition of punch 15

Figure 2: Assembly of flask onto pallet 3981/01

Figure 3: Initial gap under foot

Figure 4: Replacement jacket and top shield fasteners

Figure 5: Assembly of the jacket on to flask

Figure 6: Test action sequence – Angle 1

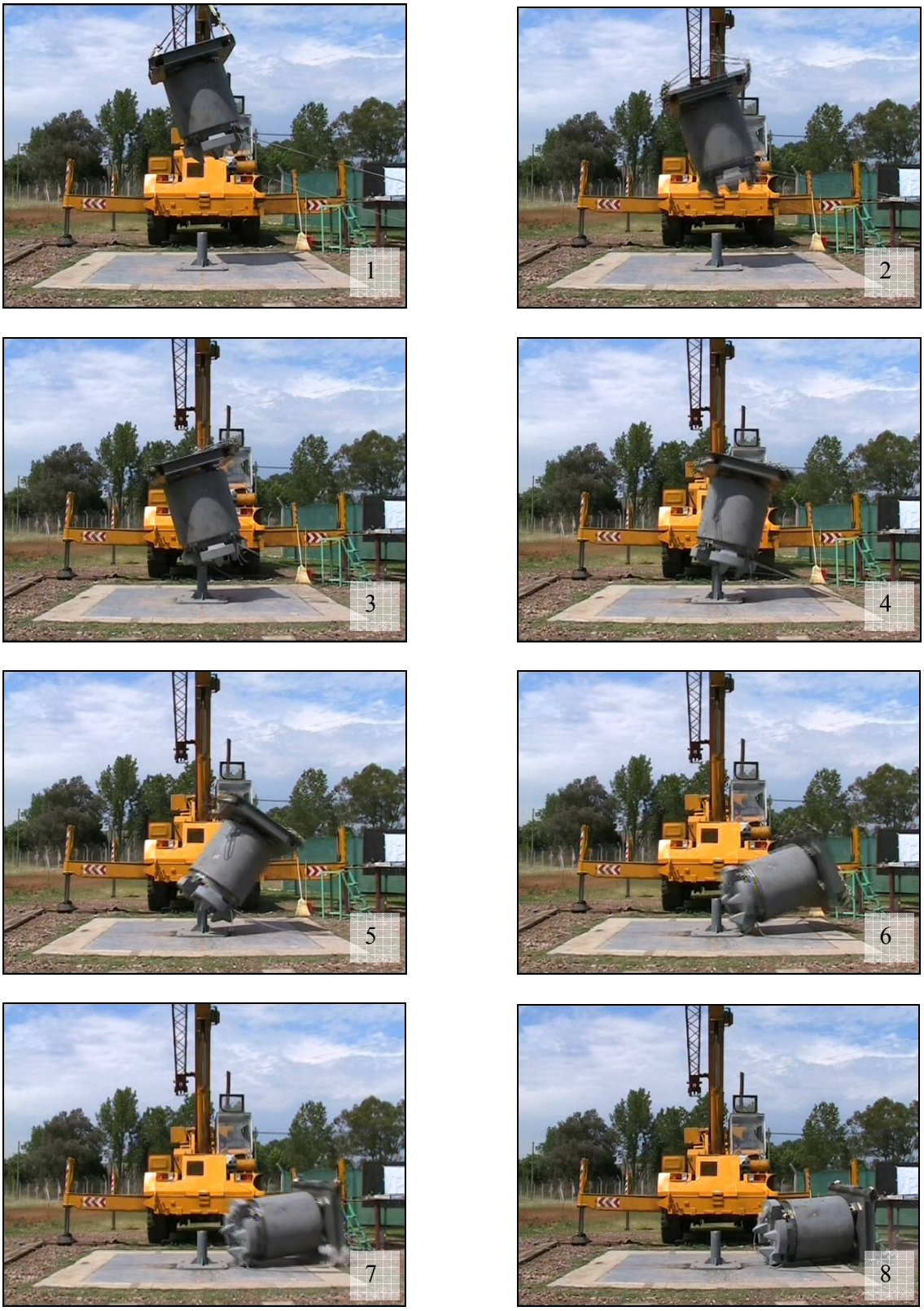

Figure 7: Test action sequence – Angle 2

Figure 8: Above target

Figure 9: 1.030m above target

Figure 10: Inclinometer readings (2 planes)

Figure 11: After drop

Figure 12: Damage to top shield

Figure 13: Damage to top shield cone

Figure 14: Damage to top shield (secondary impact)

Figure 15: Damage to top shield (secondary impact)

Figure 16: Damage to pallet (secondary impact)

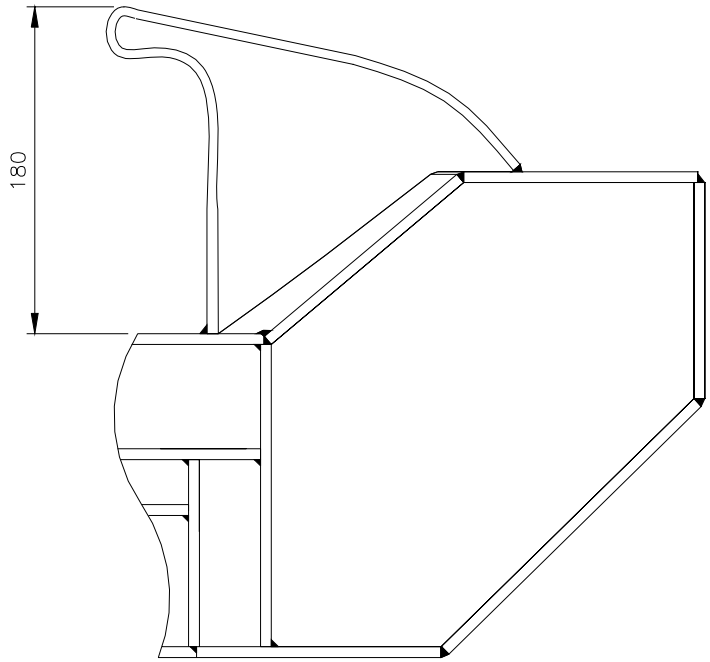

Figure 17: Damage to cone

Figure 18: Condition of punch

Reviss Services (UK) Ltd **Drop Test Checklist (OP225)**	RTR: 245 Date: 20/11/08
Test Description: 1·0m Punch Test: Angled Inverted (IAEA Type B)	
1. Confirm all personnel are aware of safety rules	✓
2. Test Plan/issue	RTM 118 issue 2, Drop 11.
3. Specimen Design/Serial No/Drg No.	3981/01 (flask & jacket) *
4. Height gauge Identity/Drg No.	1·030m (R8083/005 issue A).
5. Target Identity/Drg No.	R8085/001 issue B.
6. Punch Identity/Drg No.	R8099/002 issue A.
7. Penetration bar Identity/Drg No.	N/A
8. Other Inclinometer Bosch DNM 60L	(cal. due 30/09/09).
9. Specimen prepared correctly	See RTR 244 and below**.
10. Specimen orientated correctly	73·8° & 0·4° on jacket.
11. Photograph just above target	✓
12. Raise to correct height	✓ 1·030m.
13. Release specimen	✓
14. Photograph in situ	✓
15. Photograph damage	✓
16. Confirm correct execution of drop	✓
17. Pass/Fail (if, applicable see Test Plan)	PASS (fit to continue).

18. Notes

* ~~Pallet and top shield are 3981/02~~ DWR Pallet is 3981/01, top shield is 3981/02.

** Pallet nuts retorqued to 150 N.m. Jacket and top shield bolts and nuts replaced with new and torqued to 80 N.m. Grill screws to 20 N.m. Wrench: Norbar TT300: 2008/189666 (cal. due 27/10/11).

- Impact cone crushed to height of 180mm above inner surface.
- Minor damage to supporting segment, inner surface and edge of pallet from secondary impacts.
- No other damage externally visible.
- Pallet, jacket, top shield and grill securely attached.

19. Signed: DW Rogers	Date: 20/11/08
20. Witnessed: Michael Nix	Date: 20/11/08