MITSUBISHI HEAVY INDUSTRIES, LTD.
16-5, KONAN 2-CHOME, MINATO-KU
TOKYO, JAPAN

December 12, 2011

Document Control Desk
U.S. Nuclear Regulatory Commission
Washington, DC 20555-0001

Attention: Mr. Jeffrey A. Ciocco

Docket No. 52-021
MHI Ref: UAP-HF-11430

Subject: MHI's Responses to US-APWR DCD RAI No.862-6165 Revision 3 (SRP 10.04.08)

References: 1) "MHI's Response to US-APWR DCD RAI No. 862-6165 Revision 3" dated December 12, 2011.

With this letter, Mitsubishi Heavy Industries, Ltd. ("MHI") transmits to the U.S. Nuclear Regulatory Commission ("NRC") a document entitled "Responses to Request for Additional Information No. 862-6165 Revision 3".

Enclosed is the response to the RAI contained within Reference 1. This transmittal complete the response to this RAI

Please contact Dr. C. Keith Paulson, Senior Technical Manager, Mitsubishi Nuclear Energy Systems, Inc. if the NRC has questions concerning any aspect of the submittals. His contact information is below.

Sincerely,

Y. Ogata

Yoshiki Ogata,
General Manager- APWR Promoting Department
Mitsubishi Heavy Industries, LTD.

Enclosure:

1. Responses to Request for Additional Information No. 862-6165 Revision 3

D081
NRO

CC: J. A. Ciocco
C. K. Paulson

Contact Information
C. Keith Paulson, Senior Technical Manager
Mitsubishi Nuclear Energy Systems, Inc.
300 Oxford Drive, Suite 301
Monroeville, PA 15146
E-mail: ck_paulson@mnes-us.com
Telephone: (412) 373-6466

Enclosure 1

UAP-HF-11430
Docket Number 52-021

Responses to Request for Additional Information No. 862-6165
Revision 3

December, 2011

RESPONSE TO REQUEST FOR ADDITIONAL INFORMATION

12/12/2011

US-APWR Design Certification

Mitsubishi Heavy Industries

Docket No. 52-021

RAI NO.:	**NO. 862-6165 REVISION 3**
SRP SECTION:	**10.04.08 – STEAM GENERATOR BLOWDOWN SYSTEM**
APPLICATION SECTION:	**DCD SECTIONS 10.4.8**
DATE OF RAI ISSUE:	**11/7/2011**

QUESTION NO. : 10.04.08-9

The staff requests that the applicant explain the basis for deleting the containment isolation signals of high water level and high pressure in the steam generator blowdown flash tank in Revision 3 of the DCD. According to the DCD Revision 3 change list, these containment isolation signals were deleted based on "engineering progress." Specifically, the staff requests the following: (a) describe the process and criteria for determining the need for SGBDS containment isolation signals, and (b) describe the "engineering progress" and how it resulted in deletion of these isolation signals.

ANSWER:

(a) Describe the process and criteria for determining the need for SGBDS containment isolation signals.

Signals to close containment isolation valves in the SGBDS were selected based on the design criteria below:

[1] It is necessary to close the containment isolation valves (AOV-001A-S through AOV-001D-S) upon receipt of Containment Isolation Phase A signal, which is a safety isolation signal. The SGBDS containment isolation valves are designed to be closed upon receipt of the Containment Isolation Phase A signal.

[2] The safety-related portion of the SGBDS is designed such that a single failure in the SGBDS will not result in loss of ability to maintain the steam generators as a heat sink upon actuation of emergency feedwater pumps as a result of additional steam generator inventory loss. Both SGBDS containment isolation valves (AOV-001A-S through AOV-001D-S) and the SGBDS isolation valves (AOV-002A-S through AOV-002D-S) are designed to be closed upon receipt of an emergency feedwater pump actuation signal so as to not result in loss of the above capability due to a single failure of valves.

The description of DCD Revision 3 Subsection 10.4.8.1.1, ninth bullet, second bar will be corrected to explain the above.

[3] In the event of primary to secondary SG tube leak exceeding the allowable leak rate limit, the isolation valve closest to the leak shall be closed to limit blowdown of contaminated water. The valves (AOV-001A-S through AOV-001D-S and AOV-002A-S through AOV-002D-S) located nearest to the leaking SG tube are designed to be closed immediately upon receipt of high radiation non-safety signals so as not to continue blowdown of contaminated water.

Upon detection of high radioactive contamination in the SGBDS which would provide indication of a possible SG tube leak which exceeds the allowable leak rate limit, the following radiation monitors provide non-safety closure signals to Containment Isolation valves AOV-001A-S through AOV-001D-S and SGBD isolation valves AOV-002A-S through AOV-002D-S:

(1) SG blowdown return water radiation monitor
(2) SG blowdown water radiation monitor
(3) Condenser vacuum pump exhaust line radiation monitor

Based on the above criteria, the signals to close containment isolation valves (AOV-001A-S through AOV-001D-S) are identified as follows:

- Containment Isolation Phase A (Criteria [1] above)

  The containment isolation valves are designed to be closed automatically by this signal in order to meet GDC 57 as described in DCD Section 6.2.4.3.3.

- Emergency Feedwater Pump actuation signal (Criteria [2] above)

  The containment isolation valves are designed to automatically isolate the secondary side of the steam generator to preserve the steam generator inventory to meet safety design bases as described in DCD Chapter 10, STEAM AND POWER CONVERSION SYSTEM, Subsection 10.4.8.1.1, Safety Design Bases.

- High radiation signal from SG blowdown return water radiation monitor (Criteria [3] above)
- High-high radiation signal from SG blowdown water radiation monitor (Criteria [3] above)
- High-high radiation signal from condenser vacuum pump (Criteria [3] above)

  The above radiation signals are selected to satisfy the design features of the secondary side radiological aspects described in DCD Chapter 10, STEAM AND POWER CONVERSION SYSTEM, Section 10.1.2, Protective Features.

SGBD isolation valves (AOV-002A-S through AOV-002D-S) are closed at receipt of the following signals:

- Emergency feedwater pump actuation signal (Criteria [2] above)
- High radiation signal from SG blowdown return water radiation monitor (Criteria [3] above)
- High-high radiation signal from SG blowdown water radiation monitor (Criteria [3] above)
- High-high radiation signal from condenser vacuum pump exhaust line radiation monitor (Criteria [3] above)

(b) Describe the "engineering progress" and how it resulted in deletion of these isolation signals.

The non-safety isolation function in response to high water level and high pressure in the SGBD Flash Tank has been changed to close the blowdown stop valves located upstream of the angle valves in the SGBDS of the Turbine Island rather than the SGBD containment isolation valves. These blowdown stop valves will be identified with tag numbers AOV-502A-N through AOV-502D-N.

The purpose of these isolation signals is to protect the SG blowdown flash tank and associated portions of the flash tank. Meanwhile, the containment isolation signals "Containment Isolation Phase A" and "Emergency Feedwater Pump actuation signal" are used for plant safe shutdown, and radiation high signals are used for the prevention of unexpected discharge of blowdown containing radioactive material beyond the allowable limit.

Based on the design process described above, the water level high alarm and pressure high alarm in the SGBD Flash Tank close the blowdown stop valves (AOV-502A-N through AOV-502D-N) instead of the

SGBD containment isolation valves (AOV-001A-S through AOV-001D-S) and SGBD isolation valves (AOV-002A-S through AOV-002D-S). This change was performed to prevent unnecessary closure of the SGBD containment isolation valves caused by signals from the non-safety SGBD level indicator and pressure indicator. (Note that the change also removes the possibility of an unnecessary closure of containment isolation valves due to an invalid water level high or high pressure alarm.)

Impact on DCD

DCD Subsection 10.4.8.1.1, ninth bullet, second bar will be revised to correct a description. See Attachment-1.

DCD Figure 10.4.8-1 will be revised to add the valve tag numbers of AOV-502A through AOV-502D-N. See Attachment-2.

Impact on R-COLA

There is no impact on the R-COLA.

Impact on S-COLA

There is no impact on the S-COLA.

Impact on PRA

There is no impact on the PRA.

Impact on Technical/Topical Report

There is no impact on a technical/Topical Report.

RESPONSE TO REQUEST FOR ADDITIONAL INFORMATION

12/12/2011

US-APWR Design Certification

Mitsubishi Heavy Industries

Docket No. 52-021

RAI NO.:	**NO. 862-6165 REVISION 3**
SRP SECTION:	**10.04.08 – STEAM GENERATOR BLOWDOWN SYSTEM**
APPLICATION SECTION:	**DCD SECTIONS 10. 4.8**
DATE OF RAI ISSUE:	**11/7/2011**

QUESTION NO. : 10.04.08-10

The staff requests that the applicant clarify the basis for the changes to the Steam Generator Blowdown System parameters listed in Table 10.4.8-1. According to the DCD Revision 3 change list, "safety evaluation" parameter values were changed to "design parameters" based on "engineering progress." The meaning of these terms and the significance of the changes are not clear to the staff. For example, the flash tank capacity was increased from 300 to 370 cubic feet, and the demineralizer flow rate was decreased from 320 to 316 gallons per minute.

ANSWER:

The design flow rate and design heat duty of the SGBDS regenerative heat exchangers and non-regenerative coolers, design flow rate of the demineralizers and demineralizers inlet filters, and flash tank capacity as shown in Table 10.4.8-1 in DCD Revisions 0 through 2. They were calculated based on the enthalpy of the steam at the SG steam pressure considering 10% of the SG tubes being plugged consistent with the thermal safety evaluation.

The process parameters shown in Table 10.4.8-1 in DCD Revision 3 were calculated based on the enthalpy of the steam at the SG operating steam pressure, incorporating changes to the secondary system parameters resulting from the developments in the engineering process.
The equipment process parameters shown in Table 10.4.8-1 DCD Revision 2 were revised to apply the parameters (SG operating steam pressure) used in the heat balance diagram of secondary systems and to match the actual operating conditions.

Therefore, the changes to DCD Revision 3 Table 10.4.8-1 do not impact the safety evaluation.

Impact on DCD
There is no impact on the DCD.

Impact on R-COLA
There is no impact on the R-COLA.

Impact on S-COLA
There is no impact on the S-COLA.

Impact on PRA
There is no impact on the PRA.

Impact on Technical/Topical Report
There is no impact on a technical/Topical Report.

RESPONSE TO REQUEST FOR ADDITIONAL INFORMATION

12/12/2011

US-APWR Design Certification

Mitsubishi Heavy Industries

Docket No. 52-021

RAI NO.:	**NO. 862-6165 REVISION 3**
SRP SECTION:	**10.04.08 – STEAM GENERATOR BLOWDOWN SYSTEM**
APPLICATION SECTION:	**DCD SECTIONS 10. 4.8**
DATE OF RAI ISSUE:	**11/7/2011**

QUESTION NO. : 10.04.08-11

The staff requests that the applicant address a possible discrepancy between the equipment classifications for the Steam Generator Blowdown System (SGBDS) listed in Tables 1.9.2-10 and 3.2-2. According to Table 1.9.2-10, the "potion [sic] of outer containment valve excluding itself is designed as class 4," but Table 3.2-2 states the portions of the system outside the first containment isolation valves are equipment class 3 or 6. Please clarify these equipment classifications and describe any plans for revising the DCD.

ANSWER:

The equipment class described in DCD Section 3.2 Table 3.2-2 is correct. DCD Table 1.9.2-10 will be revised to be consistent with the information in Table 3.2-2.

Impact on DCD
There is an impact on DCD Table 1.9.2-10. See Attachment-3.

Impact on R-COLA
There is no impact on the R-COLA.

Impact on S-COLA
There is no impact on the S-COLA.

Impact on PRA
There is no impact on the PRA.

Impact on Technical/Topical Report
There is no impact on a technical/Topical Report.

- The SGBDS safety-related portions constructed in accordance with ASME Section III (Reference 10.4-8), Class 2 and Class 3 requirements are provided with access to welds and removable insulation from areas required for in service inspection in accordance with ASME Section XI (Reference 10.4-12).

- The safety-related portion of the SGBDS is designed to function in the normal and accident environments identified in Section 3.11.

- The safety-related portion of the SGBDS is designed to protect against dynamic effects associated with the postulated rupture of piping as described in Section 3.6.

- The safety-related portion of the system is designed such that a single failure in the SGBDS will not result in:

  - Loss of integrity of other blowdown lines

  - Loss of the capability of ~~the emergency core cooling system (ECCS) to effect a safe reactor shutdown~~maintaining the steam generators as a heat sink upon actuation of emergency feedwater pumps and limiting additional steam generator inventory loss. DCD_10.04.08-9

  - Transmission of excessive loading to the containment pressure boundary

10.4.8.1.2 Non-safety Power Generation Design Bases

The SGBDS draws water from the secondary side of each steam generator as required to:

- Assist in controlling secondary side water chemistry during normal plant operation, plant start up operation and abnormal water chemistry conditions at rated power operation.

- Continuously remove impurities including radioactive impurities, if present, from the steam generator bulk water and purify the blowdown water.

- Sample blowdown water for chemistry analysis and detect primary-to-secondary leakage with SG blowdown water radiation monitor.

- Cooldown the steam generator for inspection and maintenance.

- Establish and maintain steam generator wet layup conditions during plant shutdown periods.

- Drain the secondary side of the steam generator for maintenance.

- Monitor the concentration of radioactive material in the processed blowdown water with SG blowdown return water radiation monitor downstream of blowdown demineralizers.

DCD_10.04.08-9

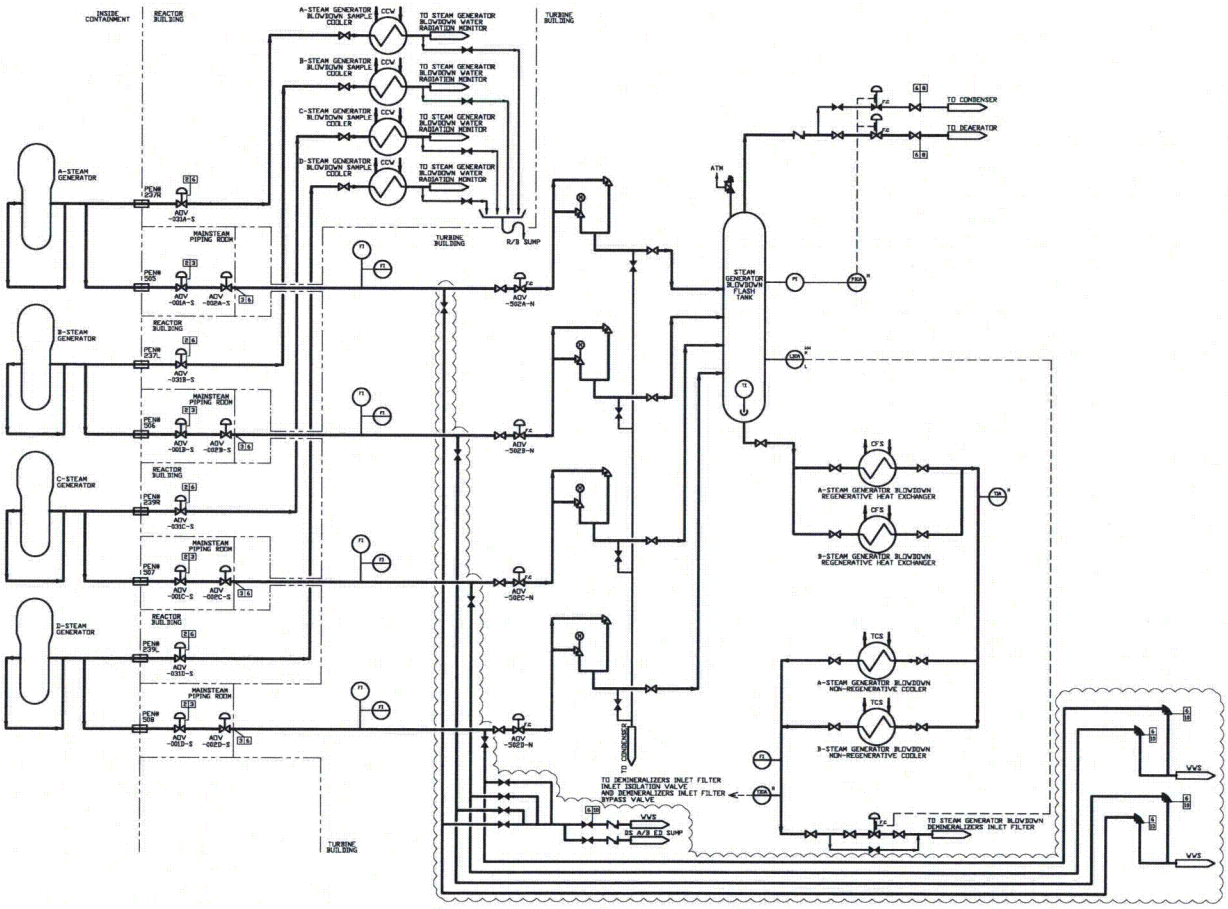

Figure 10.4.8-1 Steam Generator Blowdown System Piping and Instrumentation Diagram (1/2)

Table 1.9.2-10 US-APWR Conformance with Standard Review Plan Chapter 10 Steam and Power Conversion System (Sheet 15 of 20)

SRP Section and Title	SRP Excerpt Indicating Acceptance Criteria for DCD	Status	Appears in DCD Chapter/Section
10.4.7 Condensate and Feedwater System (continued)	5. Inspection The requirements of GDC 45 are met by demonstrating that the design contains provisions to permit periodic inservice inspection of system components and equipment. 6. Testing The requirements of GDC 46 are met by demonstrating that the design contains provisions to permit appropriate functional testing of the system and components to ensure structural integrity and leak-tightness, operability and performance of active components, and capability of the integrated system to function as intended during normal, shutdown, and accident conditions. 7. Flow Accelerated Corrosion Piping system designs, including material standards and inspection programs, shall incorporate adequate considerations to avoid erosion and corrosion. Guidance for acceptable inspection programs is found in Generic Letter 89-08 and in EPRI NP-3944, "Erosion/Corrosion in Nuclear Plant Steam Piping: Causes and Inspection Guidelines." 8. Feedwater Nozzle Design For BWRs, feedwater nozzle design, inspection, and testing procedures, and CFS operating procedures are adequate to minimize nozzle cracking at low feedwater flow. The review criteria for this issue are stated in NUREG-0619 and in associated Generic Letters 80-95 and 81-11.		
10.4.8 Steam Generator Blowdown System	1. The requirements of GDC 1 and GDC 2 are met when the design of the SGBS includes the following: A. The design is seismic Category I and Quality Group B, from its connection to the steam generator inside primary containment up to and including the first isolation valve outside containment. B. The design is in accordance with the provisions of Regulatory Guide 1.143, Position C.1.1 downstream of the outer containment isolation valves.	Conformance with no exceptions identified. Note: As for R~~-~~G_1.143 mentioned in SRP ~~criteria 2~~criterion 1.B, SGBDS is not designed as Radioactive waste management system. (The portion of outer containment valve excluding itself is designed as class ~~4~~3 or 6.)	10.4.8

DCD_10.04.08-11

DCD_10.04.08-11

DCD_10.04.08-11