Table of Contents

IV. Rotork Procedures

Intentionally Left Blank

Rotork Procedures

Refer to Figures 13-1, 13-2, 13-3, 13-4, 13-5, 13-7 and 13-8

NOTE: Refer to provided training aid (i.e. actuator) for any component not identified in noted drawings. Reference to Figure 13-6 may be helpful if student is working on a Category 1 actuator.

Disassembly Precautions

1. Do NOT work on energized equipment.

2. Do NOT attempt to lift heavy equipment or components by hand.

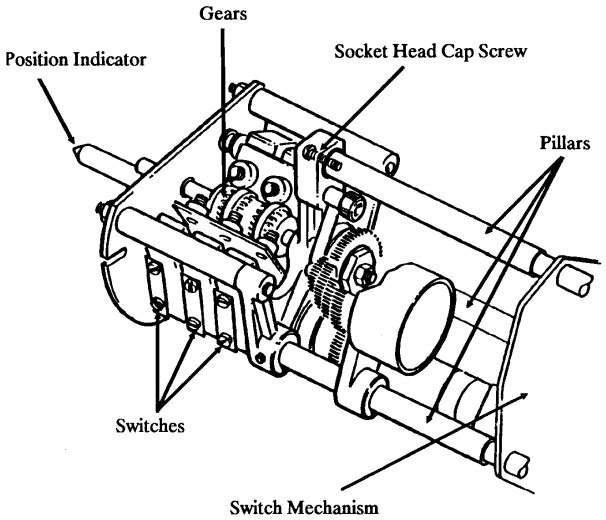

Figure 13-7 Rotork Add-on-Pak

Disassembly Preparations

NOTE: This procedure does not include removal of the actuator from the valve.

1. De-energize the actuator control circuit and motor supply.

2. Establish a clean work area for placement of components.

3. Assemble the tools required to perform disassembly. (Tools required for the disassembly of Rotork actuators in this course will be provided by the instructors.)

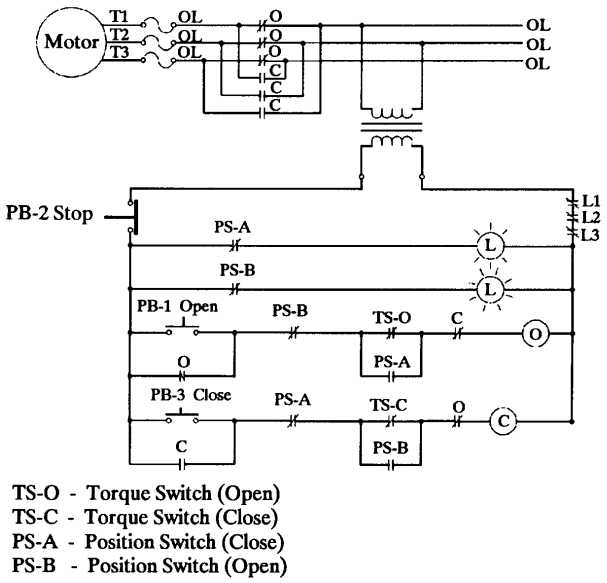

Figure 13-8 Syncropak Electrical Schematic

Disassembly Procedure

1. Remove the three cap screws holding the switch mechanism cover to the gearcase.

2. Remove the switch mechanism cover by pulling it slowly and directly outward away from the casing.

3. Inspect the switch mechanism cover "O" ring for damage or deformity; it will be reused if in good condition.

4. Remove the switch mechanism using the following steps: (Refer to Figure 13-9)

NOTE: Do NOT disconnect the wiring on the microswitch blocks.

   a. Remove the microswitch blocks from the switch mechanism mounting by pulling the blocks toward the front plate against spring tension, then pivoting the microswitch assemblies out of their mounting.

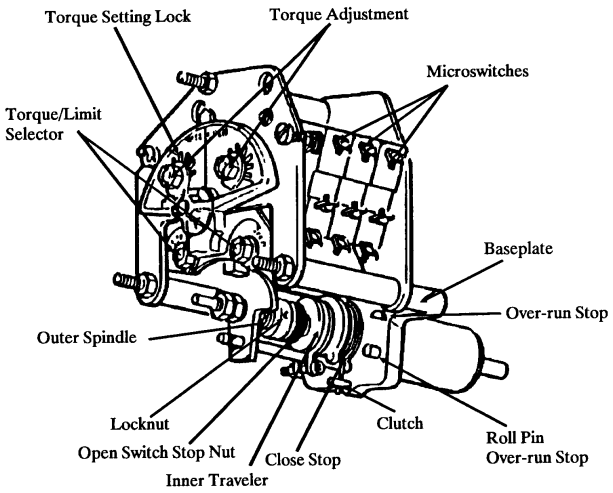

Figure 13-9 Switch Mechanism (Nuclear)

NOTE: The microswitch assemblies on nuclear rated switch mechanism are removed by loosening the hex nuts on the switch side of the front plate and pulling the switchblocks forward until they can be pivoted away from their mountings.

b. Remove the light from its mounting by loosening the hex nut enough to allow removal of the fixture.

c. Remove the two socket head cap screws on the baseplate of the switch mechanism.

d. SLOWLY pull the switch mechanism straight out, away from the housing, while preventing interference with the light and microswitch assemblies.

5. Remove the torque shaft from the actuator housing. Do not disturb the torque shaft length adjustment. (Refer to Figure 13-10)

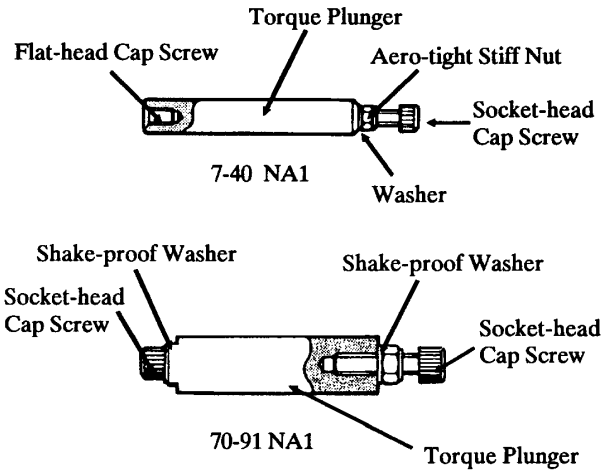

Figure 13-10 Torque Shaft

6. Remove the drive bush by performing the following steps:

NOTE: During these steps, use caution when resituating the actuator casing to prevent injury to personnel and damage to electrical components.

   a. Reorient the actuator so that the drive bush on the actuator output is accessible.

   b. Manually operate the actuator until the drive bush retainer set screw is visible through the hole in the actuator base.

   c. Loosen the set screw and unscrew the drive bush retainer by rotating counter-clockwise.

NOTE: It may be necessary to use a punch to unseat the retainer from the drive bush.

   d. Remove the drive bush by pulling outward to disengage it from the center column lugs.

7. Handwheel removal:

   a. Remove the socket head cap screw located near the base of the handwheel.

   b. Grip the nylon retainer using needle-nose pliers.

   c. Rotate the handwheel clockwise while pulling on the nylon retainer.

   d. After the retainer is removed, pull upward on the handwheel assembly to remove it from the casing.

8. Motor assembly removal:

   a. Using the hand/auto lever, place the actuator in hand operation.

NOTE: Performing this step will remove the force exerted on the wormwheel by the clutch spring via the clutch ring and clutch keys.

   b. While supporting the motor, unscrew the cap screws holding the motor to the gearcase.

   c. Pull the motor assembly slowly and squarely from the gearcase, taking care not to damage the gearcase oil seals with the threaded portion of the motor wormshaft.

d. Support the motor assembly at the casing. Do NOT allow tension to be exerted on the motor leads. Disconnect the motor and thermostat leads.

NOTE: These disconnects for the motor and thermostat leads have been added locally to make disassembly easier for training.

9. The Belleville spring pack is located at the base of the motor. The Belleville spring pack assembly is oriented at the factory based on the desired actuator output torque and thrust. Consult a course instructor for additional information.

10. Center column removal:

    a. Ensure that the hand/auto finger is lying lengthwise on the wormwheel. If not, push the lower end of the hand/auto finger sideways with a screwdriver.

    b. While capturing the clutch spring and washer, remove the "O" ring and then the clutch spring and washer from the center column.

    c. Remove the clutch ring and clutch keys by grasping the keys with needle-nose pliers. Do not drop the clutch keys into the gearcase.

NOTE: For size 70/90 actuators, grasp the clutch ring or cap screws with the needle-nose pliers.

    d. Lift out the yoke assembly.

    e. Remove the cap screws holding the thrust pad. Remove the thrust pad and wormwheel.

    f. Remove the cap screws holding the thrust base to the actuator. Remove the thrust base.

NOTE: The size 70/90 actuators have a two-piece thrust base.

    g. Tap the top of the center column to drive it out through the bottom of the casing.

Cleaning and Inspection

1. Clean the actuator's mechanical assemblies/components using a degreaser or solvent compatible with the oil rings and seals.

2. Inspect the wormwheel for damaged or worn teeth. Also inspect the wormwheel drive pins.

NOTE: If the motor assembly is to be replaced, a new wormwheel should be used.

3. Inspect the limit switch wheel and worm for wear. If necessary, gears should be replaced as sets.

4. Inspect the clutch keys and keyways for nicks, burrs, etc.

5. Inspect the helix action to ensure correct torque shaft operation. The helix action should be smooth without binding.

6. Inspect the hand/auto assembly components for damage.

7. Inspect the drive bush for nicks, burrs, or excessive wear. A drive bush showing excessive signs of wear should be replaced.

8. Inspect the lower, threaded portion of the center column for damaged threads caused by the drive bush retainer set screw. Dress the threads if necessary.

9. Inspect all oil seals and "O" rings for damage; replace as necessary.

10. Disassemble the thrust base and inspect bearing surfaces.

Reassembly

1. Install the center column up through the bottom of the gear case. Install the thrust base on the actuator casing.

2. Install the wormwheel and thrust pad through the top of the casing. Check for free rotation of the wormwheel.

3. Mount the motor assembly and connect the motor and thermostat leads. Carefully engage the wormshaft and wormwheel. Avoid damaging the gearcase oil seals.

4. Install and position yoke. Ensure that the yoke set screw is correctly located in the thrust pad hole.

5. Slide the clutch ring and clutch keys down the center column. Rotate the center column, if necessary, to prevent the keys from engaging the drive pins on the wormwheel or the lugs on the yoke.

6. Ensure that the keys are flat on the wormwheel. Install the clutch spring and washer. Carefully press the spring into compression and roll the "O" ring into the groove. Slowly release pressure on the clutch spring until it is held by the "O" ring.

7. With the hand/auto finger still flat on the wormwheel, ensure that the yoke is correctly positioned, with the top of the lugs on either side of the yoke approximately 0.015 inch from engagement under the clutch ring collar. The set screw is adjusted to raise or lower the yoke. Tighten the locknut on the set screw after adjustment.

8. Install the torque shaft in the gearcase.

9. Install the switch mechanism in the actuator. Extreme caution must be used in locating the switch mechanism wiring to prevent crushing the leads under the mechanism baseplate. Install and tighten the switch mechanism cap screws.

NOTE: The pointer on the switch mechanism faceplate should be aligned with the arrow on the switch mechanism frame. If it is not, stop and consult with the course instructor(s) before proceeding.

10. Mount the microswitches in the switch mechanism frame. Install the lamp and bracket on the switch mechanism. To set the switch mechanism, refer to the electrical controls section of this chapter. Install the switch mechanism cover temporarily to protect it from damage by slowly installing the cover with the mechanism centered. This ensures proper engagement of the position indicator.

11. Install the handwheel assembly on the casing by centering the handwheel oil seal on the center column and pushing the handwheel housing toward the gearcase. Be sure the oil seal is properly positioned.

12. Install the nylon retainer in the gearcase while rotating the handwheel counter-clockwise. Install the retainer cap screw.

13. Install the drive bush:

    a. Reorient the actuator casing so that the center column base is accessible.

    b. Install the drive bush; ensure full drive lug engagement.

    c. Install and tighten the drive bush retainer.

NOTE: For the purposes of this training course, the drive bush retainer is not set screwed in place.

14. Perform an operational test in accordance with the operational testing section of this chapter.