2.3.3 HBC Operators

Introduction

Refer to Figure 2-51. HBC operators are gearboxes which are placed between Limitorque SMB actuators and valves such as butterfly and ball valves which require 1/4 turn (90°) rotation for operation. The gearboxes provide added gear reduction to the reduction provided by the SMB unit alone.

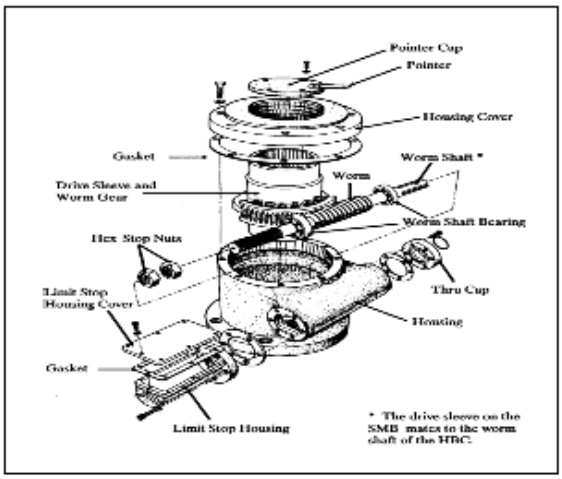

Figure 2-51 HBC Actuator

There are two basic designs of the HBC operator.

1. Refer to Figure 2-52. HBC-0 through HBC-3 operators have hex stop nuts on a threaded part of the worm shaft for use in positive stopping.
2. Refer to Figure 2-53. HBC-4 through HBC-10 operators have adjustable stop screws mounted in the HBC housing for use in positive stopping.

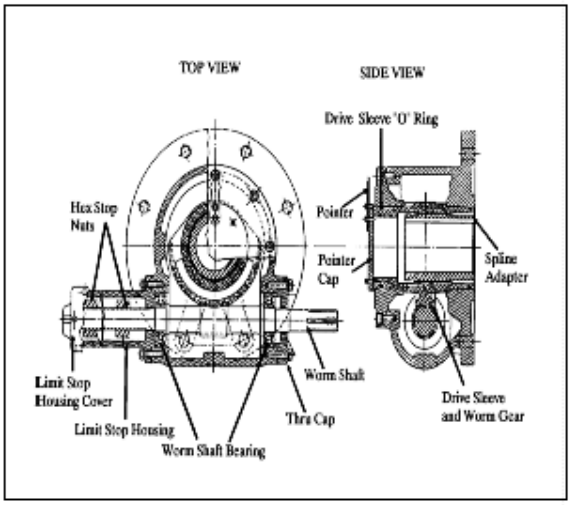

Figure 2-52 HBC-0 through 3 Operator Top and Side Views

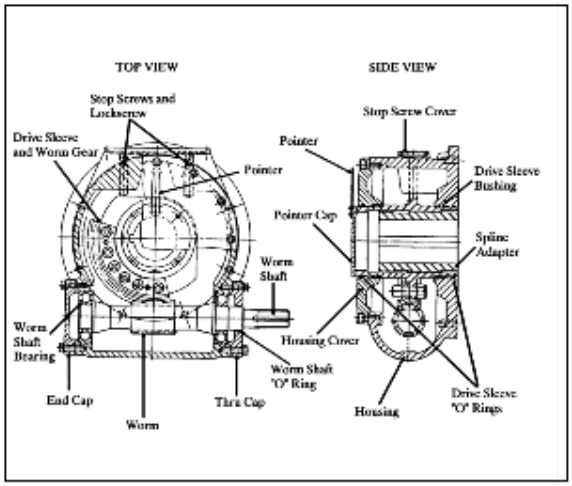

Figure 2-53 HBC–4 through 10 Operator

NOTE: Key nut and AWWA type stops are not discussed in this manual.

Operation

1. Refer to Figure 2-52. The output of the actuator is fed into the HBC unit through a WORM SHAFT. The worm shaft meshes with the WORM GEAR/DRIVE SLEEVE. The drive sleeve has internal splines which

mesh with splines on the 1/4 turn valve shaft, normally through a splined or keyed adapter, a key is normally used. As the worm gear/drive sleeve rotates, it also rotates the 1/4 turn valve drive shaft. The HEX STOP NUTS provide positive stops.

2. The hex stop nuts cannot rotate due to the LIMIT STOP HOUSING COVER preventing rotation. The hex stop nuts move axially along the worm shaft during operation. The hex stop nuts will move until one of them strikes an end of the LIMIT STOP HOUSING, preventing further rotation of the worm shaft.
3. The unit should be set up so that the limit switch on the actuator stops valve movement. The stops provided are to stop the unit if the limit switch fails.
4. Refer to Figure 2-53. HBC-4 through HBC-10 have STOP SCREWS installed into the housing to stop rotation. Otherwise its operation is identical to that of the HBC-0 through HBC-3 operators.