Table of Contents

II. SMB-0 THROUGH 4 PROCEDURES

A. General

1. **Task Grouping** Refer to Figure 6-1

Some tasks under the "Procedure for Major Tasks" section may be used for partial disassembly of the actuator. The following groupings suggest tasks for different parts or areas.

Handwheel Removal

- Handwheel Removal
- Handwheel Installation

Worm and Belleville Spring Pack Removal

- Declutch Lever Removal
- Spring Cartridge Cap/Worm Spring Pack Removal
- Belleville Spring Pack Disassembly and Inspection
- Belleville Spring Pack Reassembly
- Belleville Spring Pack Installation

Actuator Motor Removal

- Motor Removal
- Motor Bearing and Pinion Checkout

Clutch Tripper Adjustment

- Adjustment of the Declutch Mechanism (Clutch Tripper Splined Eccentric Bushing)

Drive Sleeve Disassembly

- Drive Sleeve Assembly Removal
- Drive Assembly Bearing Cup Replacement
- Drive Sleeve Components Disassembly
- Drive Sleeve Components Reassembly
- Drive Assembly Installation

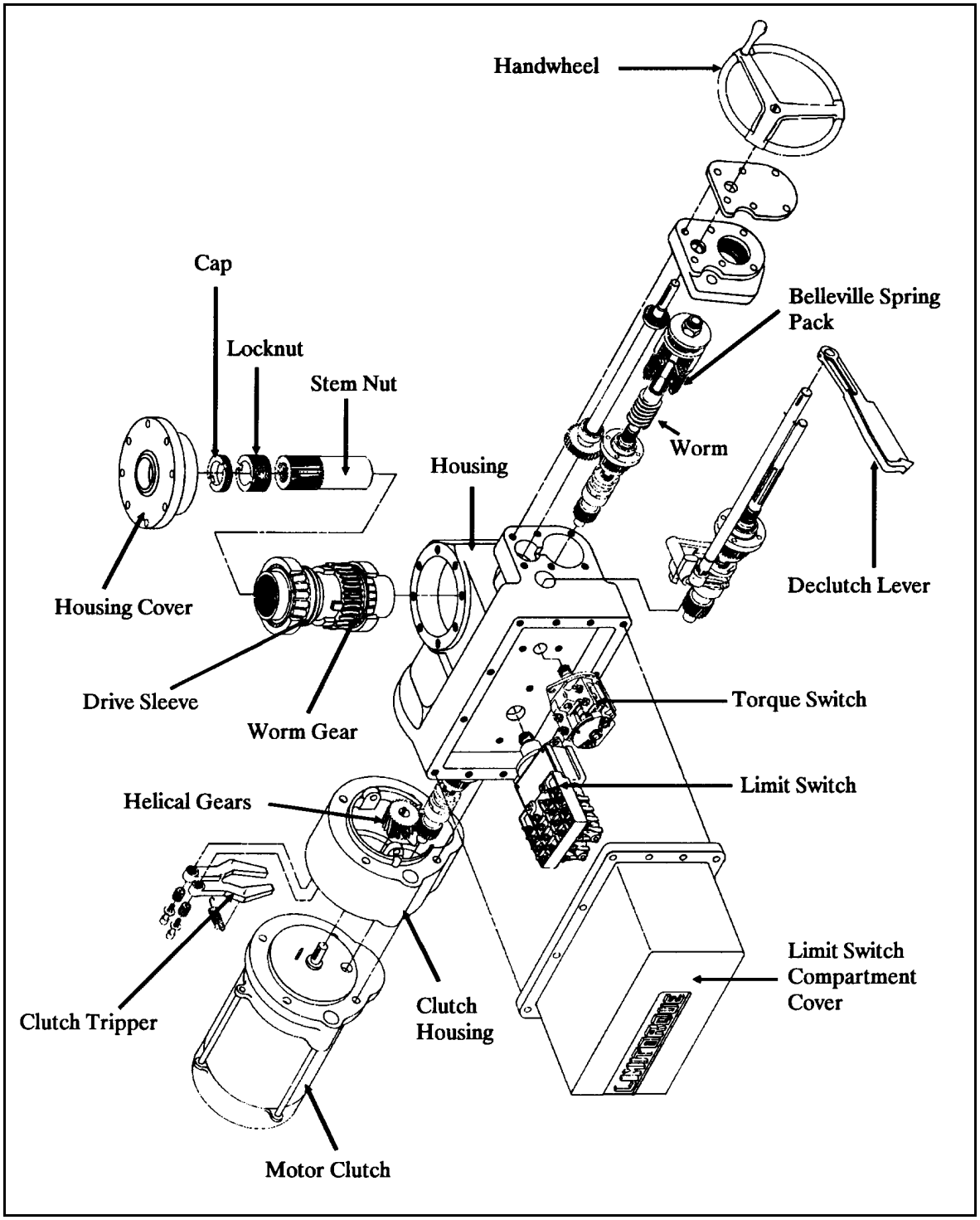

Figure 6-1 SMB-0 Exploded View

2. Total Actuator Disassembly/Reassembly Overview

This topic covers complete actuator disassembly and reassembly. Disassembly of some subassemblies is not recommended unless required. Place all parts in a labeled container(s) as they are removed to prevent loss or mixing with other actuator parts.

1. Install work support equipment (temporary lighting, scaffolding etc.)

2. Determine and install suitable rigging, including transport equipment, if removing the actuator to separate rebuild area.

3. Verify valve is blocked/safety tagged and safe work conditions are established.

NOTE: Label all parts or store them in a labeled container as they are removed to prevent loss.

4. Disconnect external connection (supports, conduit etc.)

5. Remove actuator from valve.

6. Disassemble actuator.

7. Clean and inspect parts.

8. Replace or repair parts as necessary.

NOTE: Hand pack all bearings with grease before reassembly. Do not depend on actuator fill grease to grease bearings.

NOTE: When returning worn parts to service carefully evaluate and document their condition. They should be serviceable to the next scheduled maintenance inspection. This helps prevent anticipated corrective maintenance.

9. Reassemble actuator.

10. Reinstall actuator on valve.

11. Reinstall external connections.

12. Perform switch adjustment, post-maintenance testing and any required work.

13. Remove temporary work support equipment.

3. Precautions

NOTE: When replacing parts affecting worm-to-worm gear alignment (drive sleeve, housing, lower drive bearing, worm, worm gear) or when worm gear mesh is suspect a blue check should be performed.

NOTE: All parts, lubricants, fluids, and cleaners should be approved for use on the site. Inclusion of site material code numbers in site procedures material lists is recommended. All this material and

equipment will not be required for every job. Experience will provide guidance on what is actually required.

NOTE: Viton "O" rings and quad rings are identified with a red paint dot. With time, this dot may fade to a pink or orange shade.

4. Material Requirements

- Tags or containers for parts
- Penetrating oil
- Disassembly table/platform
- Solvent container
- Limit switch gear box lubricant
- Main gear box lubricant
- Valve stem lubricant
- Anti-seize compound
- Cleaning solvent
- Clean lint-free cloths
- Emery cloth
- Scotch-Brite pads
- Brushes (soft-bristle, stainless steel or bronze)
- Seal and gasket replacement kit
- Cartridge gasket material (fishpaper)
- Thread-locking compound
- Vegetable fiber paper
- Anchorite 443 (or Klinger SIL-C-4401) gasket material, 1/32" thickness (if required, 1/64" and 1/16")
- Brass shim material
- Lockwire, SS, 0.032 and 0.047 inch
- Gear frame intermittent shaft retainer

5. Equipment Requirements

- Bronze drift pin or soft metal punches
- Hammer (lead, wood, leather or phenolic)
- Long and short hex key wrench set (including 1/16")
  Ball driver and t-handle wrench sets are useful.)
- Honing stone
- File set
- Feeler gauges
- Locknut removal tool
- Cold chisel, diamond point (alternate: prick punch)
- Drill bits (set)
- Electric hand drill
- Scribe or pin punch
- Small retaining ring pliers (external and internal)
- Bearing puller (alternate: arbor press, bearing removal/installation)
- Inside micrometers (0 to 3 inch)
- Outside micrometers (0 to 1 inch, 2 to 3 inch)
- Small magnet
- Vernier caliper (9 to 3 inch)
- Brass rod ½ inch x 12 inch
- Thin 8-inch slot screwdriver
- Combination wrench set
- Large slot screwdriver
- Limit switch adjusting tool (Limitorque available)
- Strap wrench/padded vise
- Rigging equipment, as required
- Housing cover rigging lift adapter
- Drive sleeve removal adapter

B. Procedures for Major Tasks

1a. Actuator Removal (Stem Nut Removal Method) Refer to Figure 6-1

NOTE: Refer to provided training aid (i.e. actuator) for components not identified in noted drawings.

CAUTION: Do not remove the actuator when it has a thrust load. The actuator normally has a thrust load when the valve is seated. Even when the torque switch is closed the actuator may be under a thrust load. Even if the valve is slightly open, or fully open, the valve is still under system pressure. Open a vent to vent off system pressure, if possible.

1. Establish a work area.

2. Set up scaffolding and temporary lighting as required.

3. Determine rigging and transport equipment.

4. Remove lifting or transportation interferences.

5. If valve stem position cannot be changed, make a valve stem locking clamp. See Figure 6-2.

6. Verify special tool availability.

CAUTION: Some actuators have more than one power supply.

7. If possible, remove valve differential pressure and actuator thrust loading. To maintain valve position, install a valve stem position clamp before relieving actuator thrust load.

8. Verify valve is blocked/safety tagged, with area in safe working condition.

9. Remove limit switch compartment cover fasteners.

10. Remove limit switch compartment cover and limit switch compartment cover gasket pulling the cover straight away from the actuator or swinging open if hinged. (Take care to clear limit switch and wiring.)

11. Verify actuator is deenergized by using an appropriate meter.

12. Verify wiring is labeled/marked and in accordance with current wiring diagrams.
13. Disconnect external wiring and tape ends; remove conduit, wiring, and external ground leads.

CAUTION: Excessive force on set rod can cause damage.

14. Rotate limit switch set rod clockwise to disengage limit switch. This disconnects the intermittent gears in the limit switch gear frame from the secondary drive pinion of the

limit switch cartridge.

15. Loosely reinstall limit switch compartment cover, gasket, and fasteners.

16. Remove actuator mechanical restraints or supports.

17. Remove stem cover, and indicator rod, if installed.

NOTE: If installed, an indicator rod would be attached to the top of the valve stem to denote valve position.

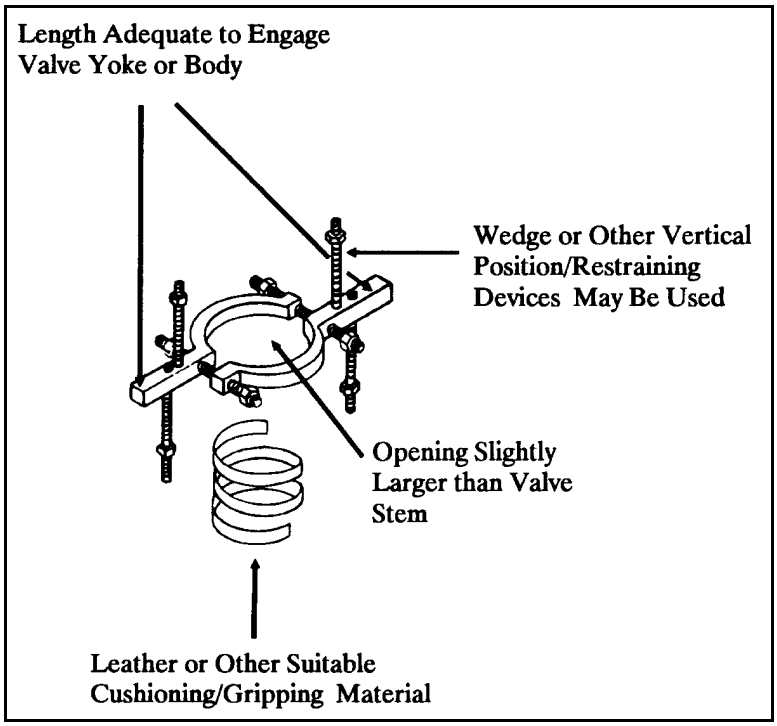

Figure 6-2 Valve System Locking Clamp

18. Match mark actuator housing to valve yoke flange.

NOTE: Operators on valves with integral stem nuts or rotating stem valves do not need stem nut removal. For rotating stems skip to step 23.

19. To remove stem nut do the following: If staked, minimize stem thread foreign particle contamination by placing a cloth in the upper drive sleeve area. Drill out locknut staked area. If set screw locked, remove set screw.

NOTE: Special wrenches ease locknut removal.

20. Remove metal particles and chips. Using a special wrench or soft drift pin, remove locknut.

21. Engage manual operation and rotate handwheel in close direction. The stem nut will rise. Continue until stem nut stops rising.

22. Manually remove stem nut from valve stem.

NOTE: Actuator rigging can be attached several ways. One is replacing two housing cover fasteners with lifting eyes. Housing covers have holes which can be used for attaching lifting eyes. The holes are also used for jacking bolts to force housing cover off during disassembly.

NOTE: Motor removal may ease actuator rigging and removal.

23. Rig actuator with proper capacity rigging and remove slack.

24. Remove actuator to valve yoke fasteners.

CAUTION: Do not allow enough actuator sideways motion to occur such that it bends the stem. This is a particular concern when not lifting straight up.

CAUTION: Do not lift the actuator by the handwheel or declutch lever.

25. Remove actuator from valve and transport to work area.

26. Clean and inspect valve stem for galling, wear or damage. Inspect key/keyways or anti-rotation devices for damage, if equipped.

    Results:_____

27. If needed, record stem thread pitch, lead, and diameter (Refer to Figure 6-3)

    Results:_____

28. If required, install a stem thread protector.

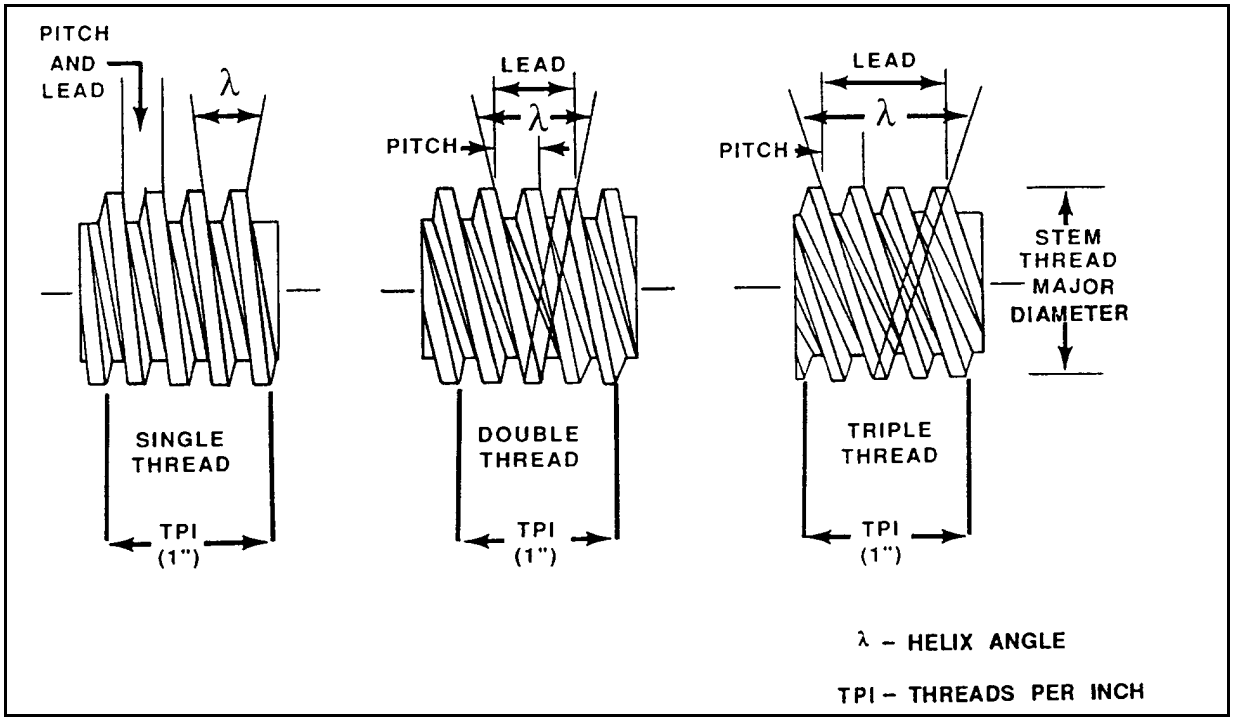

Figure 6-3 Valve System Thread Determination

NOTE: The more leads on a valve stem allows for more axial travel per revolution while maintaining the thrust capabilities of the stem. This is a result of the helix angle being larger but the number of threads per inch remaining the same.

1b. Actuator Removal (Expedited Method)

CAUTION: Do not remove the actuator when it has a thrust load. The actuator normally has a thrust load when the valve is seated. Even when the torque switch is closed the actuator may be under a thrust load. If the valve is at least slightly open it will have little to no thrust load.

CAUTION: This method has an increased chance of binding and/or damaging the stem or stem nut. Handle actuator carefully. Carefully coordinate rigging and threading the actuator off the stem.

1. Establish a work area.

2. Set up scaffolding and temporary lighting as required.

3. Determine rigging and transport equipment.

4. Remove lifting or transportation interferences.

5. If necessary, make valve stem locking device. (Refer to Figure 6-2)

6. Verify special tool availability.

CAUTION: Some actuators have more than one power supply.

7. If possible, remove valve differential pressure and actuator thrust loading. To maintain valve position, install a valve stem position clamp before relieving actuator thrust load.

8. Verify valve is blocked/safety tagged and safe working conditions have been established.

9. Remove limit switch compartment cover fasteners.

10. Remove limit switch compartment cover and limit switch compartment cover gasket pulling cover straight away from the actuator or swing open if hinged. (Take care to clear limit switch and wiring).

11. With proper meter, verify actuator is de-energized.

12. Verify wiring is labeled/marked and in accordance with the wiring diagrams.

13. Disconnect external wiring, tape ends, remove conduit, wiring, and external ground leads.

NOTE: If valve cannot be fully closed, record approximate valve position.

14. If the stem is unlocked, manually close the valve. This removal method applies valve stem force in the close direction. Record as left position.

    Position:_____

CAUTION: Excessive force can damage the set rod.

15. Rotate limit switch set rod in the clockwise direction, disengaging the limit switch. This disconnects the intermittent gears in the limit switch gear frame from the secondary drive pinion of the limit switch cartridge.

16. Loosely reinstall limit switch compartment cover, gasket, and fasteners.

17. Remove actuator mechanical restraints or supports.

18. Remove stem cover, and remove indicator rod, if installed.

NOTE: If installed, an indicator rod would be attached to the top of the valve stem to denote valve position.

19. Match mark actuator housing to valve yoke flange.

NOTE: Actuator rigging can be attached several ways. One is replacing two housing cover fasteners with lifting eyes. Housing covers have jacking holes. Lifting eyes can be installed in them for lifting.

NOTE: Motor removal may ease actuator rigging and removal.

20. Remove actuator to valve yoke flange fasteners.

CAUTION: Do not allow enough operator sideways motion to bend or damage the stem. This is a particular concern when not lifting straight up.

21. While supporting actuator weight with the rigging, engage manual operation and rotate handwheel in close direction until the stem nut disengages from the valve stem.

22. Transport actuator to the work area.

23. Clean and inspect valve stem for galling, wear, or damage. Inspect key/keyways or anti-rotation devices, if equipped, for damage.

    Results:_____

24. If needed, record stem thread pitch, lead, and diameter. (Refer to Figure 6-3)

NOTE: The following several tasks will be performed in class as you will be expected to disassemble, inspect, and reassemble a Limitorque SMB actuator referencing the appropriate procedures. Disassembling, inspection, and reassembling of the sub-components (i.e. worm shaft, limit switch, drive sleeve, etc.) will be performed only at the request of the instructor.

2. Limit Switch and Torque Switch Removal and Inspection

1. Remove fasteners holding the limit switch compartment cover.

2. Remove limit switch compartment cover and limit switch compartment cover gasket.

2a. <u>Limit Switch Removal and Inspection</u> Refer to Figure 6-4

NOTE: Before disturbing wiring, verify the wiring is labeled/marked and in accordance with the wiring diagrams.

1. Remove leads as required.

2. Remove limit switch cartridge to actuator fasteners.

3. Remove limit switch assembly and cartridge from actuator.

4. Remove the upper limit switch gear frame assembly from cartridge.

5. If not present, make a "THIS SIDE OUT" reference mark on the gear frame covers.

6. Remove four raised head upper gear frame cover fasteners.

NOTE: These fastener heads are taller and have smaller diameters than the lower gear cover fasteners. This prevents interference with the finger base mounting edge.

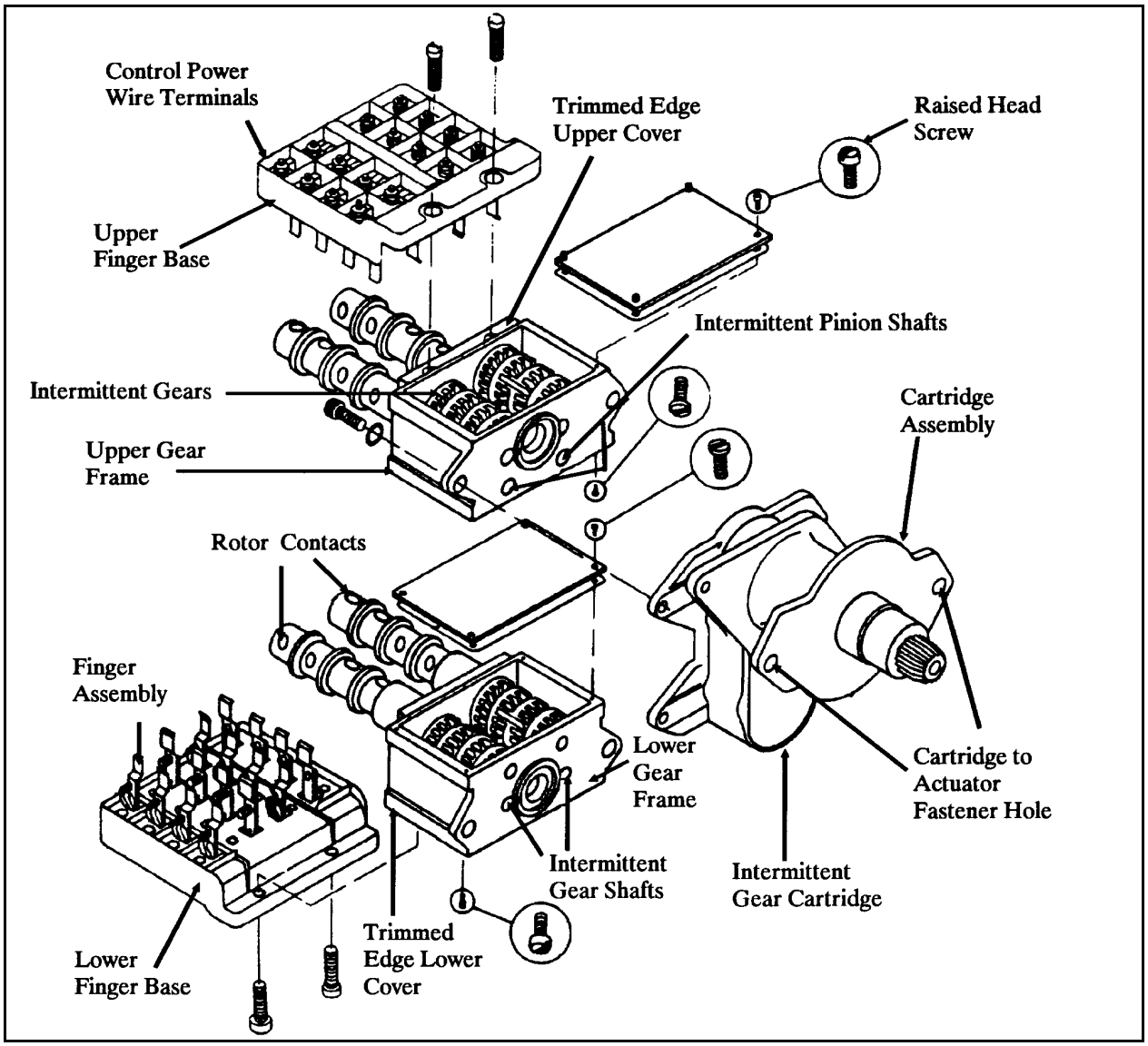

Figure 6-4 Four-Train Limit Switch Exploded View

7. Remove upper gear frame cover and gasket. Note and record number of intermittent gears. Three, four, and five intermittent gear sets are not interchangeable.

   Number of gears:_____

NOTE: Determine the condition of the gear frame cover gasket. Replacement cover gaskets should be included in the consumables, expendables, or spares list.

NOTE: Mobil 28 grease may be darker after service. In particular, it may be darker where it contacts the limit switch gear frames. This is normal.

CAUTION: Rotors are somewhat brittle. Use care when handling to avoid breakage.

8. Grease consistency should be soft or slightly fluid. Replace hardened or degraded grease.

CAUTION: During cleaning and grease removal, the intermittent pinion shafts may slide partially or completely out of the gear frame. The intermittent pinions can fall out of alignment. Misoperation of the limit switch will result if the intermittent pinions are not replaced correctly.

RECOMMENDATION: To prevent intermittent pinion shaft movement, bolting to an old cartridge, or use of solvent resistant rubber bands are two recommended methods.

9. With the rotors horizontal, verify gear frame is not completely filled with grease. All gears should have a film of grease. Remove grease if necessary.

10. Coat upper gear frame cover gasket with a thin film of grease.

11. Install upper gear frame cover, with markings outward, and gasket on the gear frame. Install cover with trimmed edge facing finger board, and fasten with four tall head fasteners. If the gasket edge facing the finger base is not trimmed, trim to the cover edge to prevent gasket protruding under the finger base. This can cause finger base cracking.

12. Install finger base on gear frame. (Do not force; excessive force can cause a rotor to crack.)

13. For four-train limit switches, repeat procedure for lower gear frame.

2b. <u>Limit Switch Inspection</u> Refer to Figure 6-5

1. Inspect limit switch contacts to the extent possible using the following steps:

   - Made (closed) contacts should have a gap between the L-bracket and the contact finger at the finger spring by the L-bracket tip.

   - Open contacts should have the finger contacting the rotor. The close contact gap may be present, but is not required.

NOTE: Do not use excessive force when bending L-brackets. The finger base may crack.

   - The L-bracket assembly may be bent to achieve a gap.

2. Inspect rotor contacts for wear, fouling, corrosion, and damage. Clean as required by burnishing, spraying with solvent, and wiping with a clean, dry cloth. Replace excessively worn or pitted finger assemblies as a set. Rotors may be replaced as a set. This reduces record keeping.

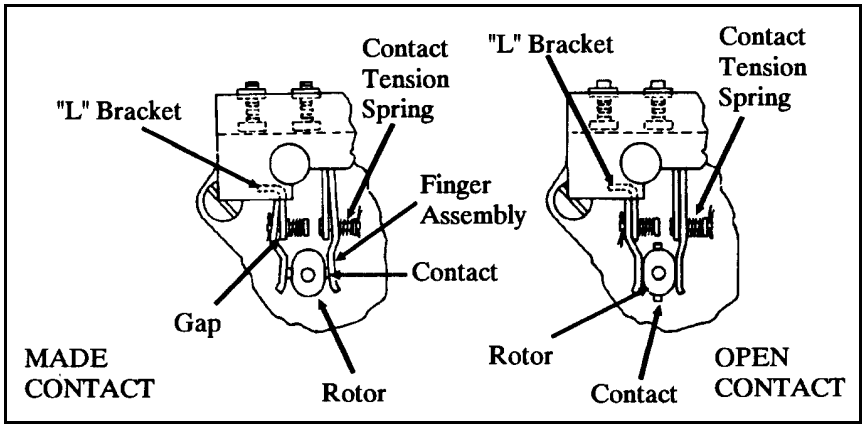

Figure 6-5 Limit Switch Contact Tension

3. Inspect rotors for double-drilled groove pin fastener holes. Replace if hole size exceeds 5/32 inch. Refer to Figure 6-6

4. Inspect rotors for cracks, especially in the roll pin area. Replace cracked rotors.

5. Inspect for slight rotor to limit switch gear frame clearance. Rotor to gear frame rubbing may cause excessive drag.

6. Inspect rotors for straightness (contacts must be able to mate).

7. Inspect finger base for cracks, especially in the gear frame attachment fastener area. Replace cracked finger bases.

8. If required, replace finger base.

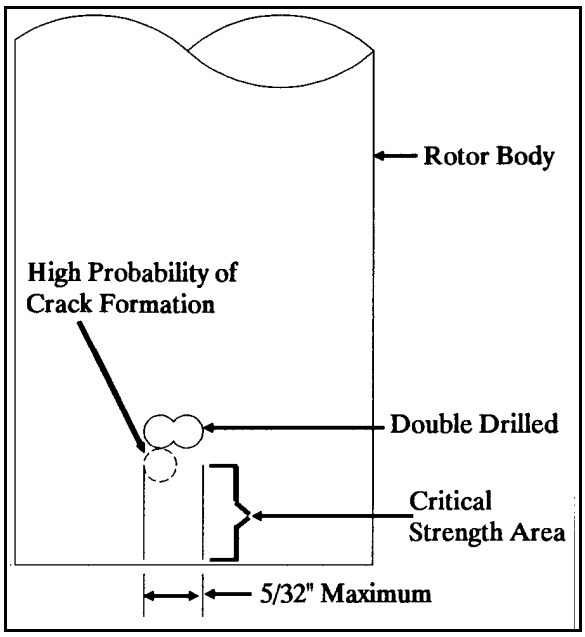

Figure 6-6 Double Drilled Rotor (Groove Pin Area)

2c. <u>Torque Switch Removal</u> Refer to Figures 6-7 and 6-8

1. Verify that torque switch leads are labeled and disconnect.

2. Record as-found-open, close, and maximum (torque limiter plate) settings.

   Open Setting: _____

   Close Setting:_____

   Max Setting: _____

NOTE: Setting torque switch at 1 OPEN and 1 CLOSED prior to removal eases proper reinstallation. This fixes the mounting bracket to the dial and pinion location. Error in pinion to bearing cartridge cap engagement is decreased.

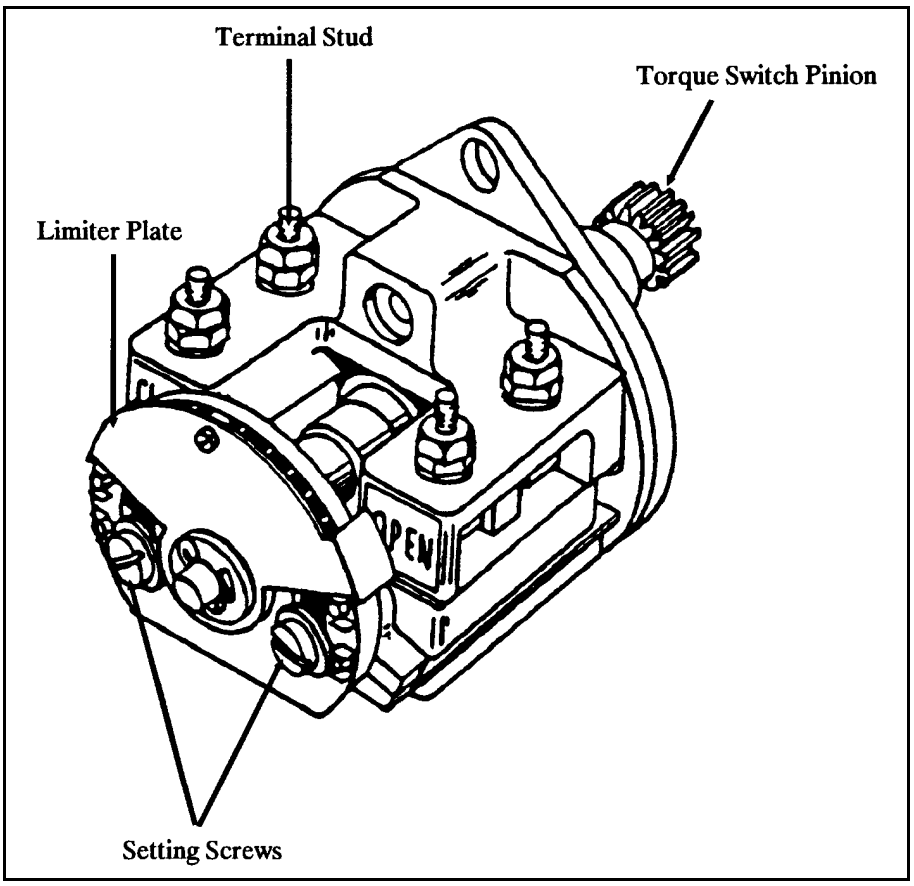

Figure 6-7 Knee Type Torque Switch

NOTE: If on the valve, the actuator can still have a thrust load when in the lost motion area with the spring pack relaxed. This is due to stem/stem nut locking threads.

3. With worm gear in the lost motion area, remove torque switch mounting fasteners.

4. Set torque switch to 1 open and 1 closed.

5. Remove torque switch from housing.

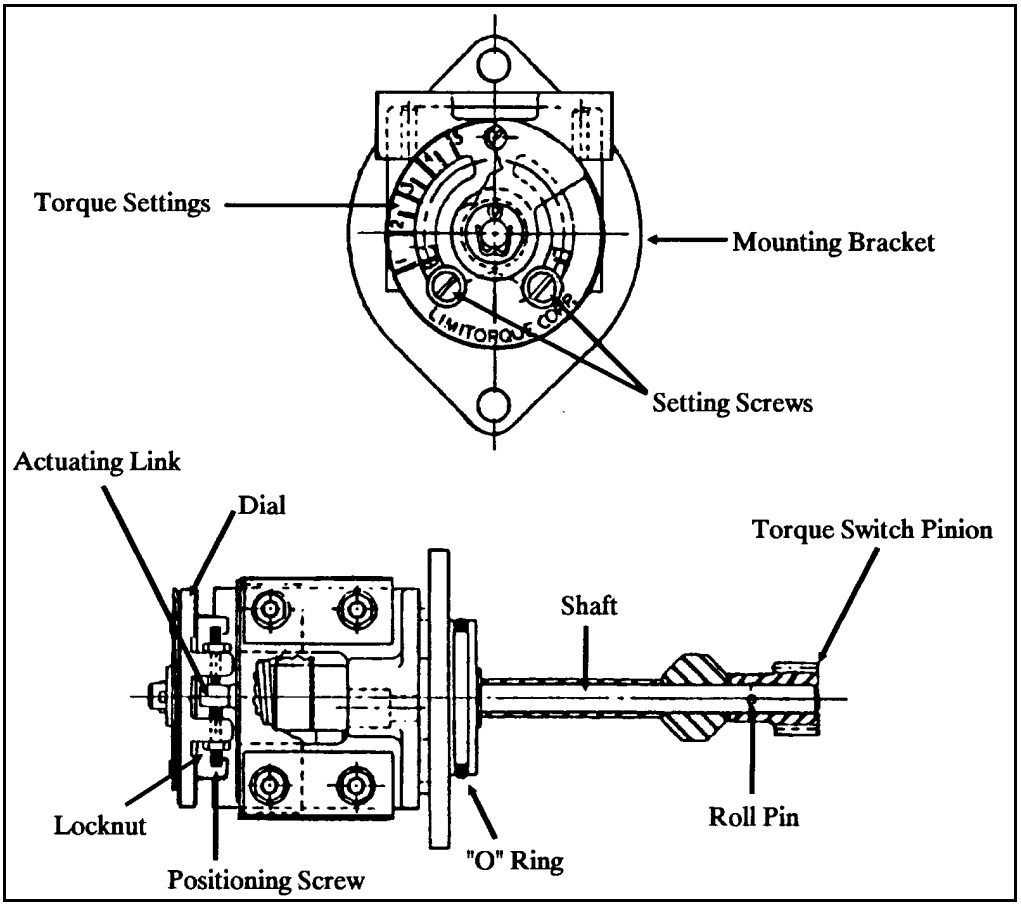

Figure 6-8 Top/Slide View of Knee Type Torque Switch

2d. <u>Torque Switch Inspection</u>

1. Inspect torque switch for cracked plastic parts.

   Results: _____

2. Inspect torque switch contacts for wear, fouling, corrosion, and damage. Clean as required by burnishing, spraying with solvent, and wiping with a clean, dry cloth.

NOTE: Only brown (Fibrite) or gray (Melamine) plastic material is approved for harsh environment qualified actuators.

3. Record terminal block and contact block color.

   Plastic Color: _____

3. Motor Removal

1. Verify motor leads are tagged/labeled.

2. Disconnect motor leads, if required.

3. While supporting motor, remove the motor mounting fasteners.

NOTE: Grease may leave clutch area when the motor is removed. Provide a container to catch leakage.

4. Remove motor from actuator while guiding motor leads through the limit switch compartment opening.

5. Count and record the motor pinion teeth and worm shaft clutch gear teeth. Compare gear teeth counted to number required for size actuator. Refer to Table 6-1.

   Number of Motor Pinion Teeth: _____

   Number of Worm Shaft Clutch Gear Teeth: _____

6. Remove motor and store.

SMB HELICAL GEAR TEETH TOTALS	
SMB-000	45
SMB-00	65
SMB-0	72
SMB-1	72
SMB-2	70
SMB-3	60
SMB-4	72

Table 6-1 Helical Gear Teeth Totals

4. Handwheel Removal

NOTE: Handwheels may have more than one set screw. All must be loosened or removed to remove handwheel.

1. Loosen handwheel set screw.

2. Pull handwheel off handwheel shaft.

3. Remove handwheel key (and spacer, if installed).

4. Store handwheel with key (and spacer, if installed).

5. Declutch Lever Removal

NOTE: To ease later disassembly, place actuator in manual.

1. Depress declutch lever, placing actuator in manual operation.

NOTE: Declutch lever key may come off with the lever. Be prepared to catch it.

2. Loosen declutch lever set screw and slide declutch lever off manual declutch shaft and key.

NOTE: If declutch lever is difficult to remove, apply penetrating oil or equivalent to joint and tap lever off with a hammer.

3. Remove declutch lever key from shaft, and spacer if equipped.

4. Examine declutch lever key and keyway for damage.

5. Store declutch lever parts.

6. Spring Cartridge Cap/Worm Spring Pack Removal Refer to Figure 6-9

WARNING: Do not remove spring cartridge cap bolts with actuator under load. Normally when valve is closed, the spring pack is compressed outwards, loading the spring cartridge cap. Place actuator in the lost motion area to remove spring cartridge cap loads.

NOTE: Some of the parts described for removal may not be present in all size SMB-0 through 4 actuators. This description primarily addresses the SMB-0 actuator. Major differences between this and other size actuators are included.

NOTE: Step one is applicable to new style **multi-piece** SMB-1 and 2 spring cartridge caps only.

1. Remove spring cartridge cap cover fasteners, spring cartridge cap plate and gasket.

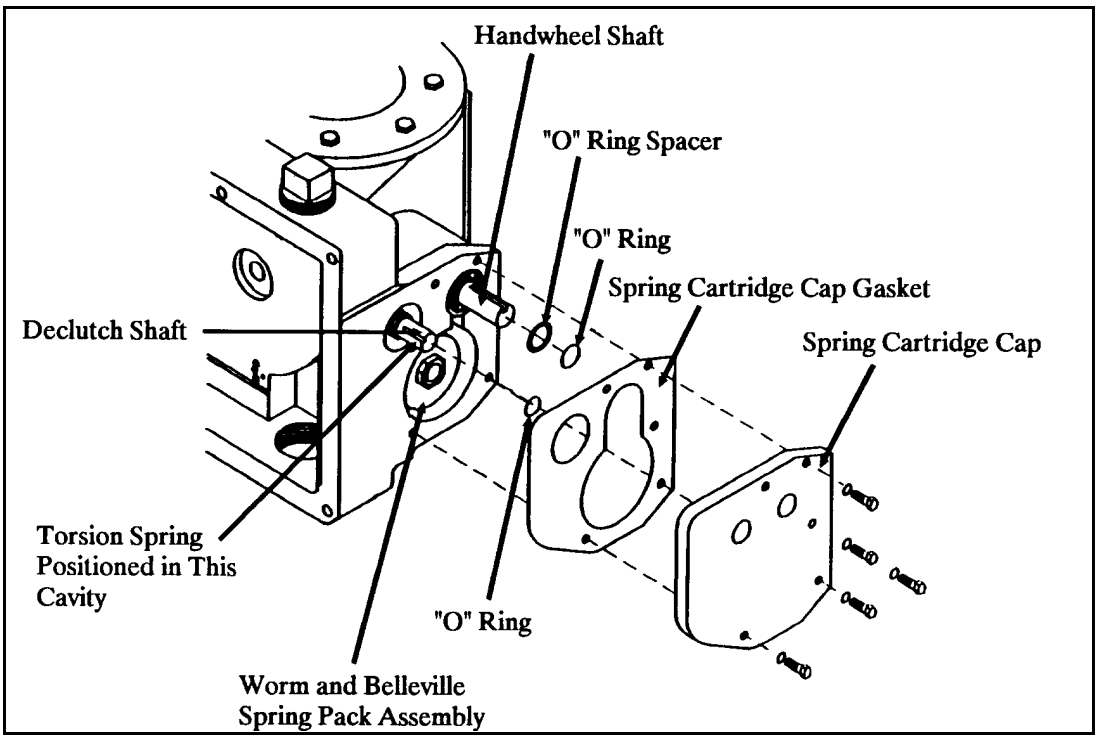

Figure 6-9 One Piece Spring Cartridge Cap

NOTE: On SMB-0 actuators the spring cartridge cap fasteners also retain the spring cartridge cap plate. (Not shown in Figure 6-9)

2. Remove spring cartridge cap fasteners.

NOTE: As the spring cartridge cap is removed a snap will be heard. This is the torsion spring (which is positioned directly behind the spring cartridge cap surrounding the declutch shaft) tension releasing. Hold declutch shaft in place to prevent declutch link separation from the declutch shaft.

NOTE: Handwheel and declutch shafts may need to be sanded or filed to remove spring cartridge cap due to corrosion or damage.

3. Remove spring cartridge cap, gasket, handwheel "O" ring, "O" ring spacer, and declutch shaft "O" ring.

4. For SMB-3 and 4 and old SMB-0, 1, and 2 style one piece spring cartridge caps, measure and record gasket thickness.

   Thickness: _____

5. SMB-3 and 4 only, inspect handwheel shaft needle bearings and oil seal.

6. Remove spring pack and worm by pulling from actuator or rotating the worm shaft. (Temporarily install handwheel, if required.)

7. Housing Cover Removal Refer to Figure 6-10

WARNING: Do not remove housing cover fasteners when actuator is under thrust loads.

1. Remove housing cover fasteners.

NOTE: SMB-2 actuator bearing cone is not pressed into housing cover.

2. Remove housing cover, quad ring, and roller bearing cup from actuator using housing cover fasteners and jacking holes.

3. Measure and record housing cover gasket thickness.

   Thickness: _____

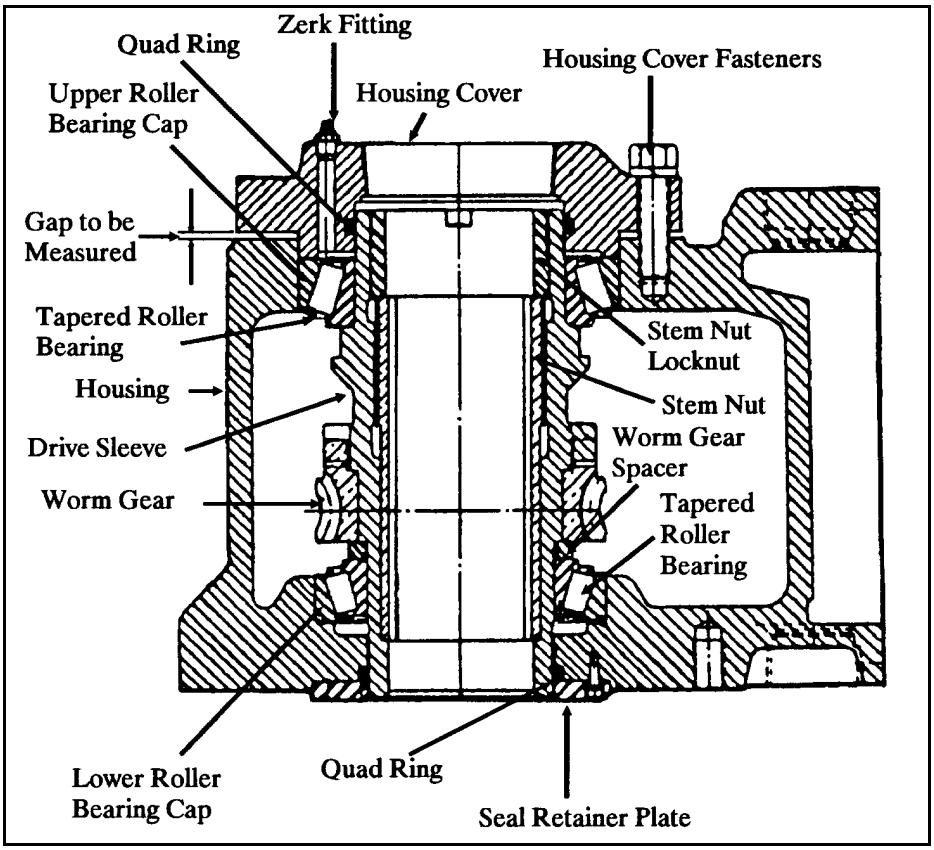

Figure 6-10 Housing Cross-Sectional View

8. Drive Sleeve Removal

NOTE: The actuator may be set on its side, and a pipe inserted through the drive sleeve. The pipe is lifted slightly and the drive sleeve removed horizontally.

1. Remove drive sleeve from housing.

NOTE: Fully disassemble drive sleeve only if required.

9. Seal Retainer Plate Removal Refer to Figure 6-10

1. Remove seal retainer plate fasteners, seal retainer plate and quad ring from actuator.

2. Store.

10. Clutch Housing Removal Refer to Figures 6-11 and 6-12

1. Remove retaining ring and split ring retainer from worm shaft. Refer to Figure 6-13

2. Remove split rings by pushing against worm shaft clutch gear, compressing fork return spring, allowing split ring segments to fall from worm shaft.

3. Remove four clutch housing cap screws.

NOTE: Some SMB-0 actuators have a declutch shaft extension passing through the clutch housing. This extension should be removed by pulling from motor end prior to removing clutch housing. This ensures it does not fall out during housing removal.

NOTE: The worm shaft clutch may come off the worm shaft as the clutch housing is removed.

4. Remove clutch housing by lifting while pulling away from the housing. The declutch fork, and worm shaft clutch will come away with the clutch housing. (Spacer for SMB-0, 1, and 2 will come with the worm shaft clutch.)

5. Remove clutch housing gasket.

6. Remove the fork return spring from the worm shaft.

7. Store parts.

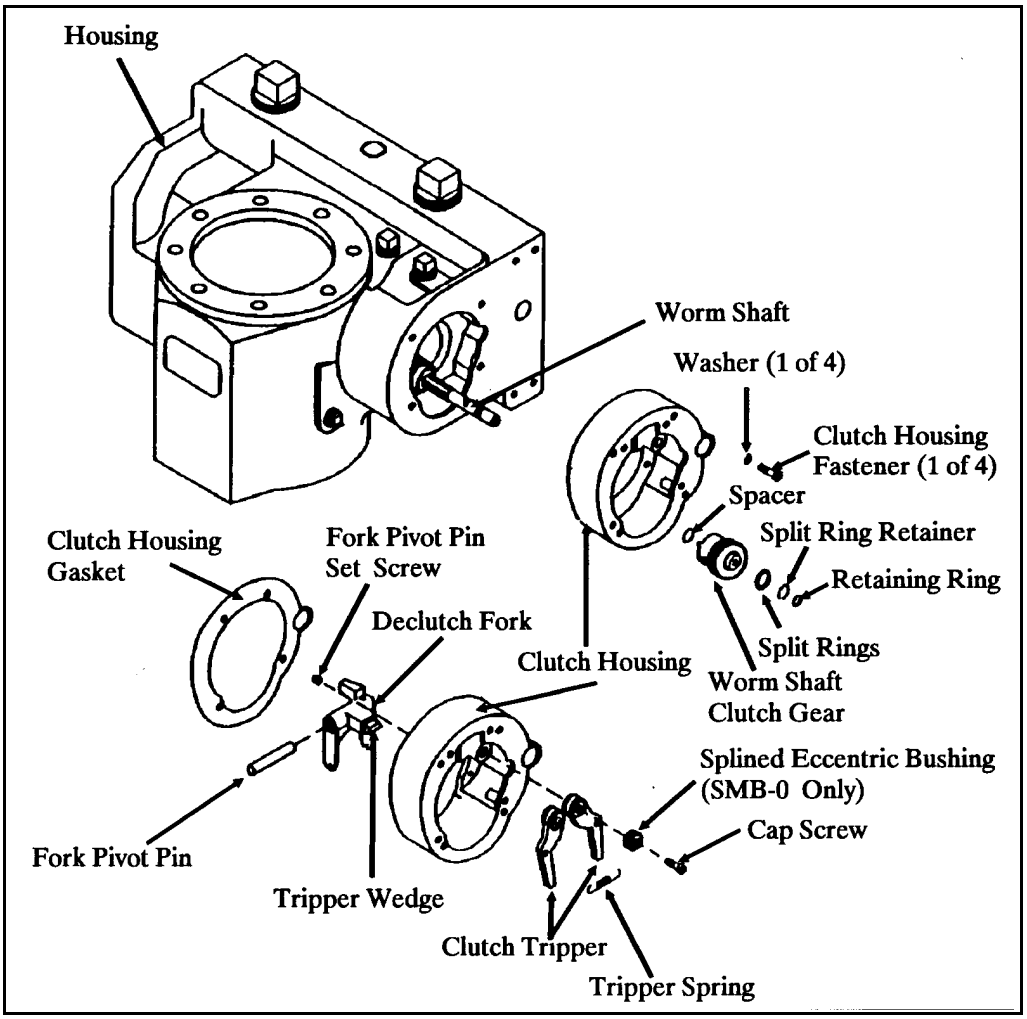

Figure 6-11 Clutch Housing Assembly and Installation

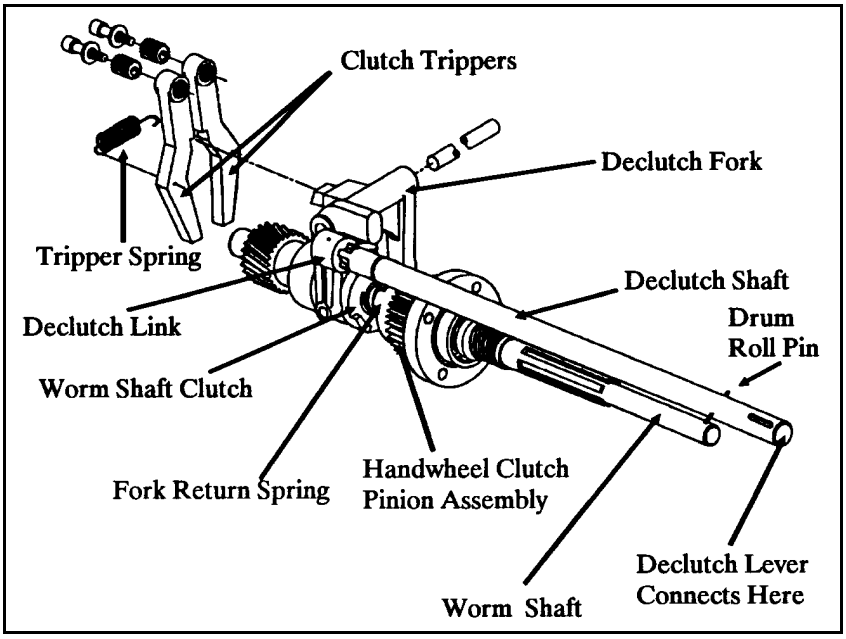

Figure 6-12 Declutch Mechanism

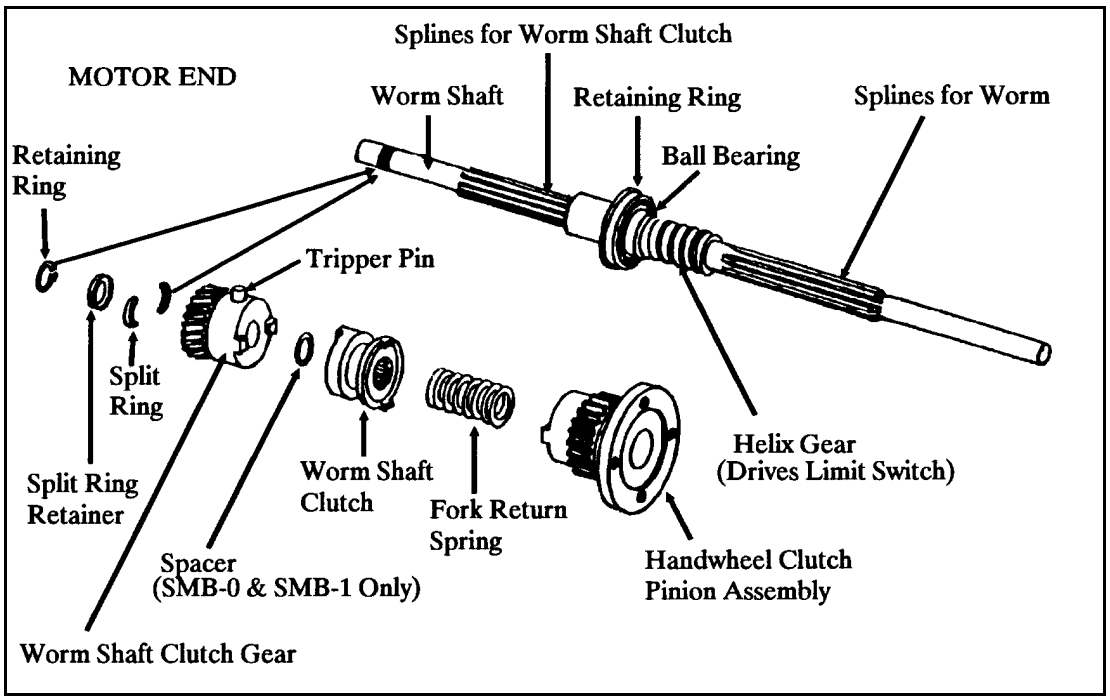

Figure 6-13 Worm Shaft

11. Manual Declutch Shaft Removal Refer to Figure 6-12

1. Remove declutch shaft extension or snap ring, if equipped, and the declutch link from motor side.

2. Remove snap ring (if equipped), between declutch link and actuator housing.

3. Remove manual declutch shaft from actuator handwheel side.

4. Remove declutch shaft torsion spring from the housing.

5. Check declutch link and declutch shaft torsion spring for damage.

NOTE: The SMB-0 declutch shaft declutch link spline area has a small diameter. If excessive force is applied, the splines may twist or shear off.

6. Check manual declutch shaft for damage.

7. Clean parts and store.

12. Handwheel Shaft Removal Refer to Figure 6-14

1. Temporarily install handwheel and key.

2. Remove handwheel shaft elastic stop nut and spacer.

3. Remove handwheel and key.

4. Remove handwheel gear and key.

5. Inspect key and keyway for damage.

6. SMB-3 and 4 only. Loosen and remove handwheel shaft bearing retainer ring fasteners. Remove retaining ring and handwheel shaft.

7. SMB-0 through 2 only. Remove handwheel shaft, bearing and retaining ring from actuator handwheel side.

8. Remove (motor end) bearing from housing.

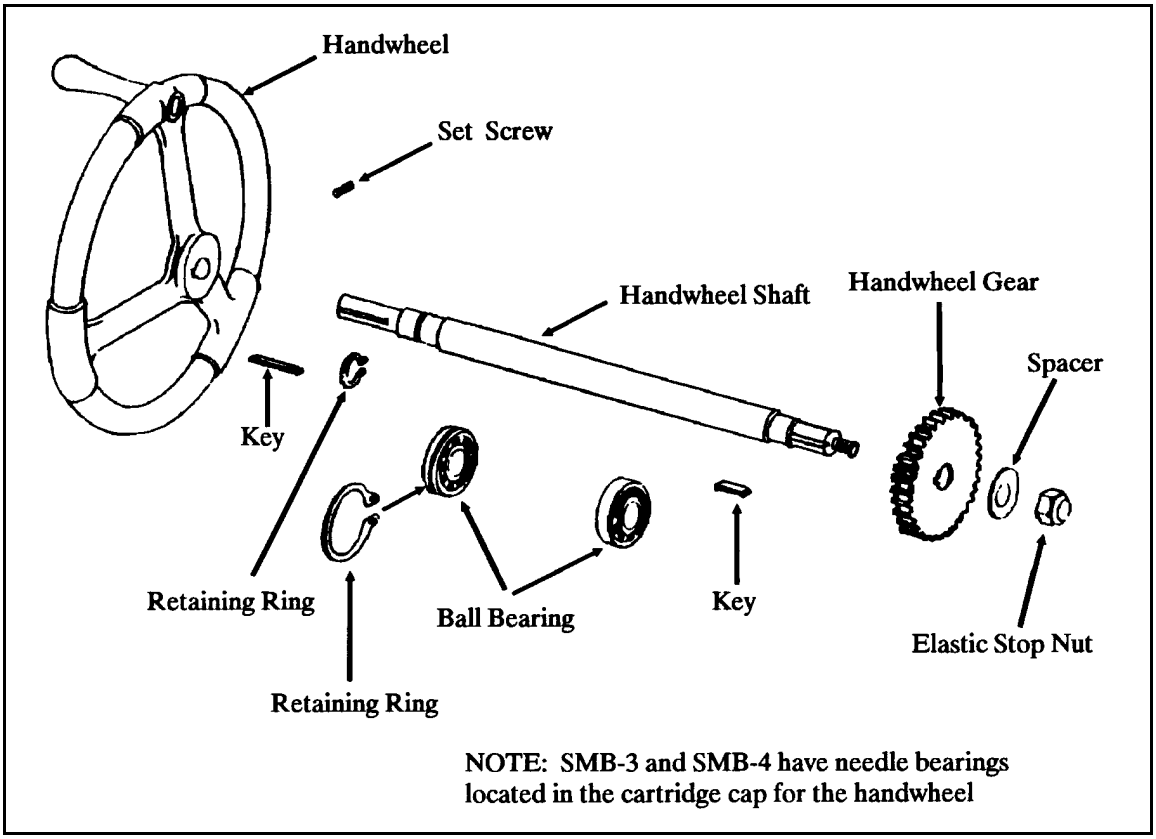

Figure 6-14 Handwheel Components

13. Worm Shaft Disassembly Refer to Figures 6-13 and 6-16

1. Remove four cap screws from the worm shaft bearing cap.
2. Remove worm shaft assembly from actuator.
3. Remove handwheel clutch pinion assembly from wormshaft.

14. Drive Sleeve Bearing Cup Replacement Refer to Figure 6-10

NOTE: Remove upper and lower drive sleeve bearing cups only for replacement or adjustment/shimming.

CAUTION: Bearing cup removal can cause bearing cup damage.

1. If discarding bearing cup, and a puller is not available, place one or more weld beads around the cup inner face. Weld metal shrinkage on cooling will ease removal.

2. If adjusting drive sleeve height (worm-to-worm gear mesh adjustment) use a temporary, machined down cup to speed shimming and checking. Install permanent cup when shimming and checking is complete. See section titled Worm to Worm Gear Alignment Check.

NOTE: Upper and lower drive sleeve cups and cones may be different sizes.

NOTE: The upper drive sleeve bearing may be pressed in the housing cover or held in the housing by the housing cover.

3. Install bearing cup by pressing into housing cover or housing as applicable.

15. House Grease Removal and Cleaning Refer to Figure 6-10

1. Mechanically remove as much grease as possible.

CAUTION: Ensure all solvent is completely removed from housing.

2. Using solvent, remove remaining grease from housing.

3. Inspect for and remove any debris or sand (particularly internal corner areas).

4. Clean gasket material from machined surfaces.

5. Remove all grease plugs and zerk fittings; clean and lubricate threads and replace as necessary.

6. Inspect lower bearing cup for corrosion, brinnelling, or other damage. Replace as necessary, reusing shims. Verify worm/worm gear mesh on reassembly.

16. General Inspections

1. Inspect all parts for damage, wear, and deformation.

2. Check all shafts for deformation and bending. Replace bent shafts. Blend out (file, stone, emery paper, etc.) rough spots.

3. Use a honing stone to blend out minor burrs and small nicks from gears, pinions, housing and parts with mating surfaces.
4. Remove surface corrosion with Scotch-Brite pads, emery cloth, or crocus cloth.

5. Inspect spring cartridge cap roll pin for looseness or bending. If bent or broken, replace it. If loose, use Loctite, peen hole, or if spacing allows, remove roll pin and drill hole for the next larger roll pin. Install oversized roll pin with same length as original. Refer to Figure 6-15

6. Bottom tapping all fastener holes and wire brushing all 1/4 inch and above fastener threads is strongly recommended.

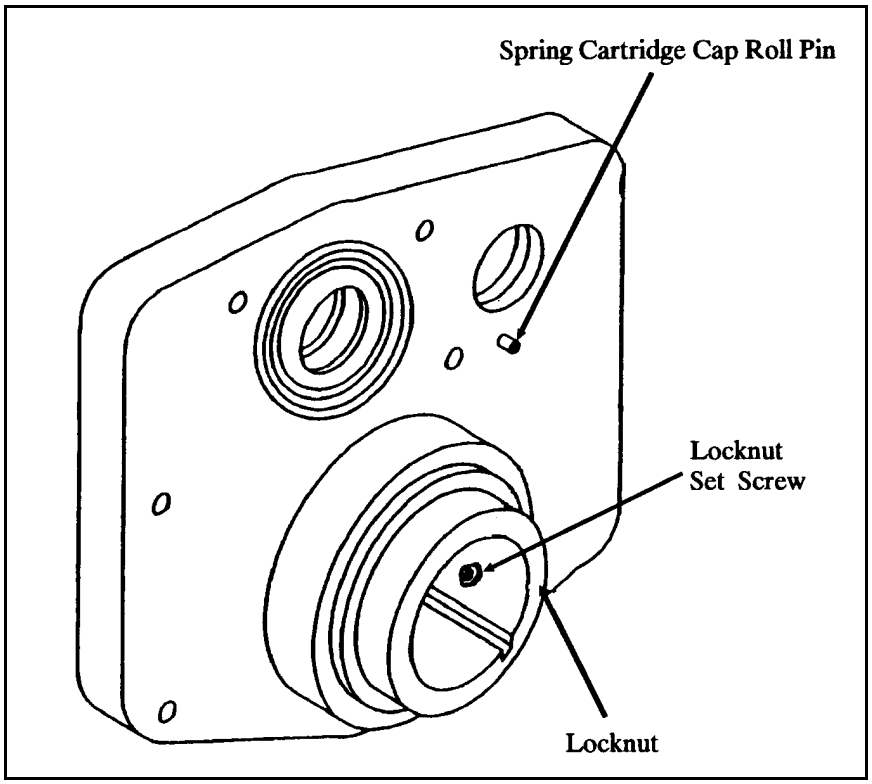

Figure 6-15 Spring Cartridge Cap Roll Pin Inspection

17. Worm Shaft Inspection Refer to Figures 6-13 and 6-16

1. Inspect worm shaft splines and threaded area for wear, damage, straightness, or galling. Replace as required.

2. Check bearing(s) for smooth rotation.

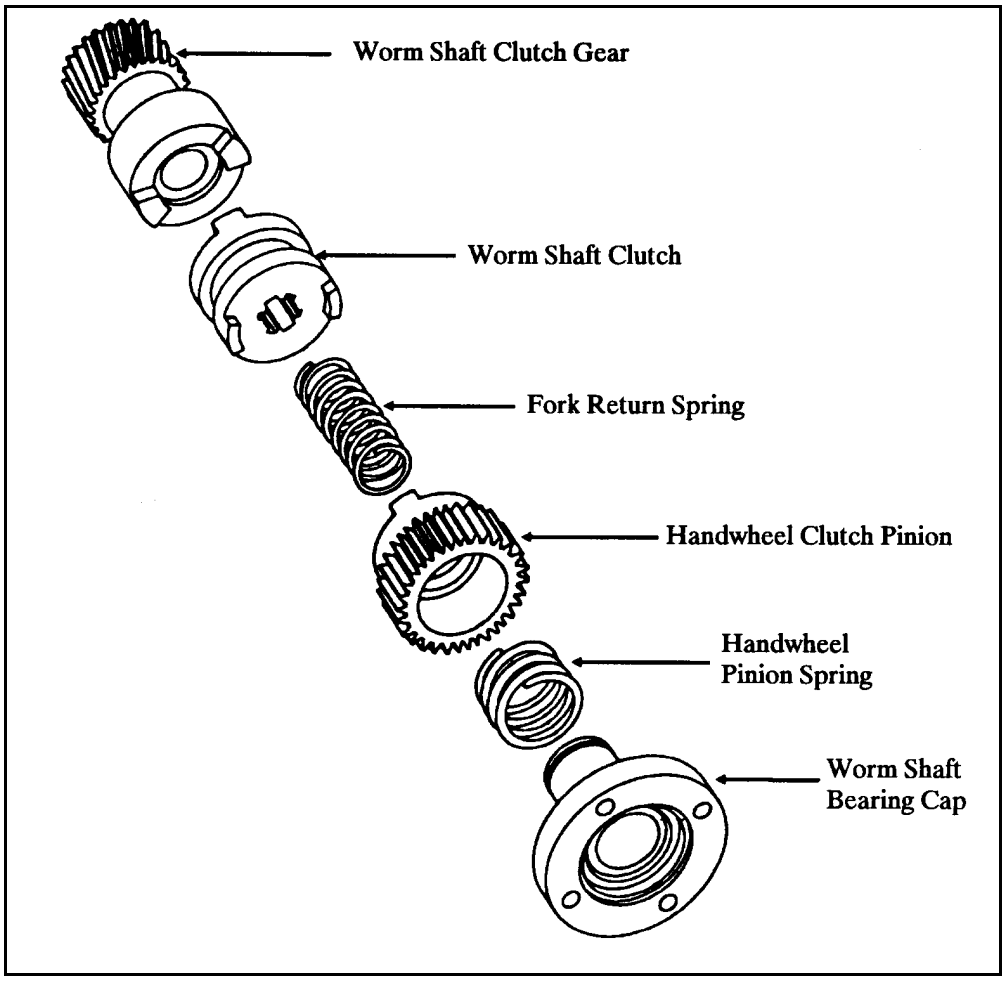

Figure 6-16 Clutch Mechanism

3. Clean and check the following worm shaft parts for wear, deformity, scoring, cracking, and pitting. Replace as necessary.

   - Split ring retainer
   - Split rings
   - Spacer (when required)
   - Worm shaft clutch
   - Fork return spring
   - Worm shaft bearing cap
   - Retaining ring

18. Clutch Housing Disassembly Refer to Figure 6-11

1. Remove tripper spring from the clutch trippers.

NOTE: New SMB-0 actuators have eccentric bushings as the clutch tripper mountings. This is for clutch fork notch height adjustment. Old style clutch trippers have simple bolted mountings.

2. SMB-0 only if eccentric bushings are used. Match mark eccentric bushing to the clutch tripper. Repeat for second clutch tripper.

3. Identify left or right clutch tripper so they will not be reversed.

4. Remove clutch tripper cap screws and prevent loss of eccentric bushings, if used.

5. Remove clutch trippers and eccentric bushings, if installed.

6. Loosen or remove fork pivot pin set screw if removal of fork is required.

7. Remove fork pivot pin if required.

8. Clean parts and clutch housing. Inspect for cracks, wear, and degradation.

9. Store parts.

19. Worm/Spring Pack Disassembly and Inspection Refer to Figure 6-17

1. Remove grease with solvent and dry.

2. Inspect worm for cracks, wear, damage, galling and nicks.

3. Check thrust bearing for free rotation with no roughness. Excessive play or looseness is unacceptable.

NOTE: Replace spring pack as a unit if parts replacement is required.

4. Check the Belleville spring pack for looseness (some preload must exist, springs should not rattle if shook) or other signs of degradation. Notify the instructor of any problems.

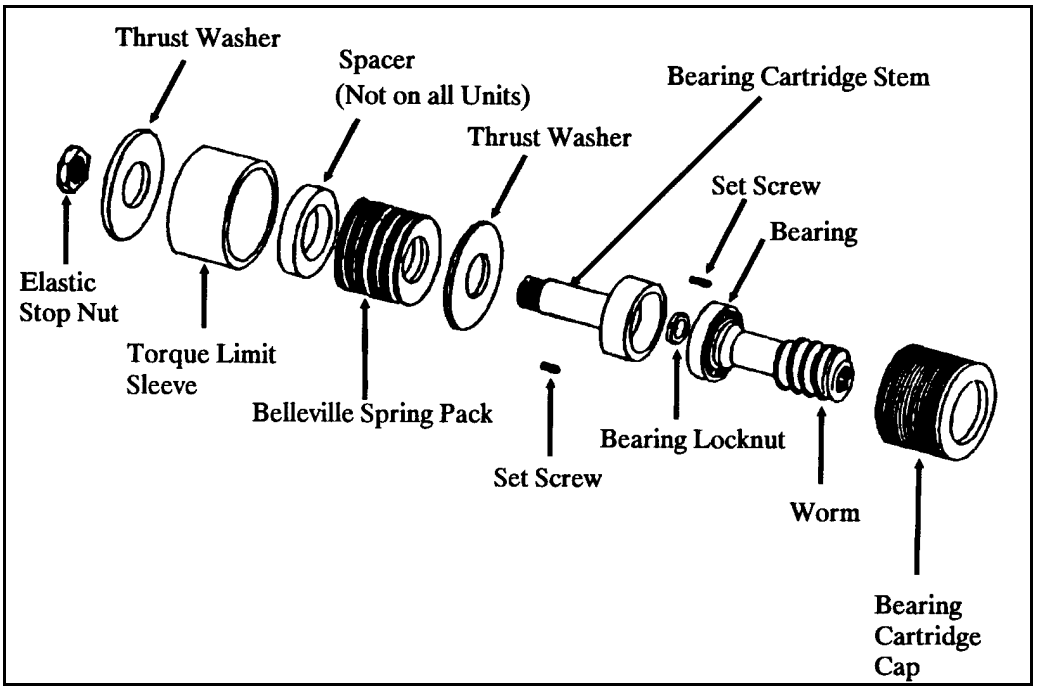

Figure 6-17 Worm Spring Pack Assembly

NOTE: If replacing the Belleville spring pack, the following step is not required.

5. Measure the Belleville spring pack assembly as-found preload for reassembly as follows:

   - With torque limit sleeve tight against either thrust washer, measure and record thrust washer to torque limit sleeve clearances at four locations 90 degrees apart. Compute and record the average.

     Distance:_____

NOTE: This is referred to as the "X" dimension.

CAUTION: Do not clamp bearing cartridge cap in a vise without bearing installed. Use a soft jawed vise or pipe vise. Assure padding is installed to prevent damage to grooves. A strap wrench is preferred.

6. Clamp bearing cartridge cap in a padded soft-jaw vise or use a strap wrench.

CAUTION: If the stop nut is a castle or spanner type nut, loosen set screw(s) before removal. Examine nut closely, set screw(s) may be in a recess. Attempted removal without first removing these screws may destroy bearing cartridge stem threads.

7. Match mark the elastic stop nut to bearing cartridge stem. If installed, remove all set screws and remove elastic stop nut. Count and record the number of turns to remove the elastic stop nut.

   Turns:_____

CAUTION: Spring assembly and orientation is critical. Use some means of maintaining spring order. The Belleville springs can be placed on a bolt welded to a plate with a nut as a retainer. A bolt and nut with washers can be used as a transfer and storage medium. The Belleville springs can be placed on a length of tie wire or on a Ty-rap.

8. Remove outer thrust washer and torque limit sleeve.

9. Remove and transfer Belleville springs, spacer, if installed, and inner thrust washer onto a bolt, or wire.

10. Clean parts with solvent and a soft-bristled brush.

11. Inspect Belleville springs as follows:

- Lay Belleville springs in order on a flat surface. Measure height of each spring. Each spring should have the same height. If spring height variation is more than 0.015 inch from the average, replace the Belleville spring pack.

- Compare each springs thickness. If thickness varies more than 0.010 inch from average, replace the Belleville spring pack.

- Check each spring for cracks. Especially for radial cracks. If spring cracking is found, replace the Belleville spring pack.

NOTE: On SMB-2 actuators only, chamfer the bearing cartridge stem to bearing cartridge stem thread area at a nominal 45 degree angle. This prevents binding between the thrust washer and the bearing cartridge stem.

12. When replacing Belleville spring packs, perform or observe the following:

NOTE: Replacement Limitorque Belleville spring packs may not be the same as the present Belleville spring pack (old spring pack may be obsolete). The new Belleville spring pack may have similar but different performance. Torque switch maximum settings and limiter plates may have changed from old values.

- Belleville spring packs should be replaced as a unit.

- When the Belleville spring pack is not replaced with an identical Belleville spring pack, new minimum and maximum settings are required.

- Document all changes due to Belleville spring pack replacement.

20. Worm Disassembly/Reassembly Refer to Figure 6-17

CAUTION: Do not clamp bearing cartridge cap in a vise without a bearing installed. Use a soft jawed vise, a pipe vise or a strap wrench. Insure vise is padded to prevent damage bearing cartridge.

To separate worm and Belleville spring pack or replace worm thrust bearing, perform the following:

1. Remove Belleville spring assembly.

2. Clamp bearing cartridge stem in a soft jawed vise or use strap wrench.

NOTE: SMB-0 actuators bearing cartridge caps are locked to the bearing cartridge stem by Loctite or staking. SMB-1 through 4 actuators bearing cartridge caps are locked by set screw(s) in the bearing cartridge cap to bearing cartridge stem. Early SMB-1 and 4 bearing cartridge caps had the set screws staked. This is not necessary on reassembly.

3. SMB-0: Unthread bearing cartridge cap from bearing cartridge stem. If difficult, heating with a heat shrink gun may help to break the Loctite loose. Excessive force can damage the thin bearing cartridge cap. Preheating in an oven at 275<M^>o<D> may be necessary.

   SMB-1 through 4: Remove bearing cartridge cap to bearing cartridge stem locking set screw(s). Remove bearing cartridge cap from the bearing cartridge stem.

4. Inspect worm bearing for looseness, wear, and damage. Replace if required or go to step 8. Clean with solvent.

CAUTION: If the bearing locknut is a castle or spanner type nut, loosen the retaining set screw(s) before removal. The set screw(s) may be in the recesses. Attempting removal without loosening may destroy the worm threads.

5. After removing bearing cartridge cap, place worm in soft-jaw vise and remove bearing locknut .

6. Using an arbor press or bearing puller, remove ball bearing from the worm.

7. Installation: Press bearing onto worm. Install worm bearing locknut. Spot drill worm and install set screw(s). Use loctite or stake threads behind set screw(s). Pack bearing with grease.

8. Seat worm assembly in bearing cartridge cap.

9. SMB-0: Thread bearing cartridge stem into the bearing cartridge cap with Loctited threads.

   SMB-1 through 4: Thread bearing cartridge stem into bearing cartridge cap. If needed, or for a tight fit, drill and tap for a set screw. Install set screw(s).

21. Belleville Spring Pack Reassembly

CAUTION: Do not clamp bearing cartridge cap in a vise without a bearing installed. Use a

soft-jawed vise, a pipe vise or a strap wrench.
CAUTION: Do not lubricate Belleville spring pack with grease.
Clamp bearing cartridge cap in soft-jaw vise or equivalent.

CAUTION: Inner thrust washer must rest flat on the bearing cartridge cap with no gap. Increase the ID chamfer (bevel), if necessary.

2. Install inner thrust washer on bearing cartridge stem with ID chamfered edge toward bearing cartridge cap.

3. Install the Belleville spring pack.

4. Install torque limit sleeve.

5. Install spacer if used, and outer thrust washer on bearing cartridge stem.

6. Verify that there is no gap between the inner thrust washer and the bearing cartridge cap.

NOTE: Elastic stop nuts deteriorate with each installation and removal. Replace when elastic stop nut can be installed by hand.

7. Install elastic stop nut using the exact number of turns, or "X" dimension between the thrust washer and the torque limit sleeve recorded earlier. (Assuming correct preload at disassembly).

8. Measure final clearance between the thrust washer and the torque limit sleeve ("X" dimension).

   "X" dimension:_____

   Number of turns: _____

NOTE: If there is no spring pack compression (preload) after performing the above, notify the instructor.

22. Stem Nut Removal and Drive Sleeve Disassembly Refer to Figure 6-18

22a. <u>Stem Nut Removal and Inspection</u>

1. If not done earlier, remove stem nut locknut stakes.

2. Remove stem nut locknut using a special wrench or soft drift pin.

NOTE: Larger stem nuts have two tapped holes to ease removal.

3. Remove stem nut from drive sleeve.

4. Inspect internal threads and splines condition. Clean outer surface using Scotch-Brite

pads.

5. Clean inner drive sleeve splines.

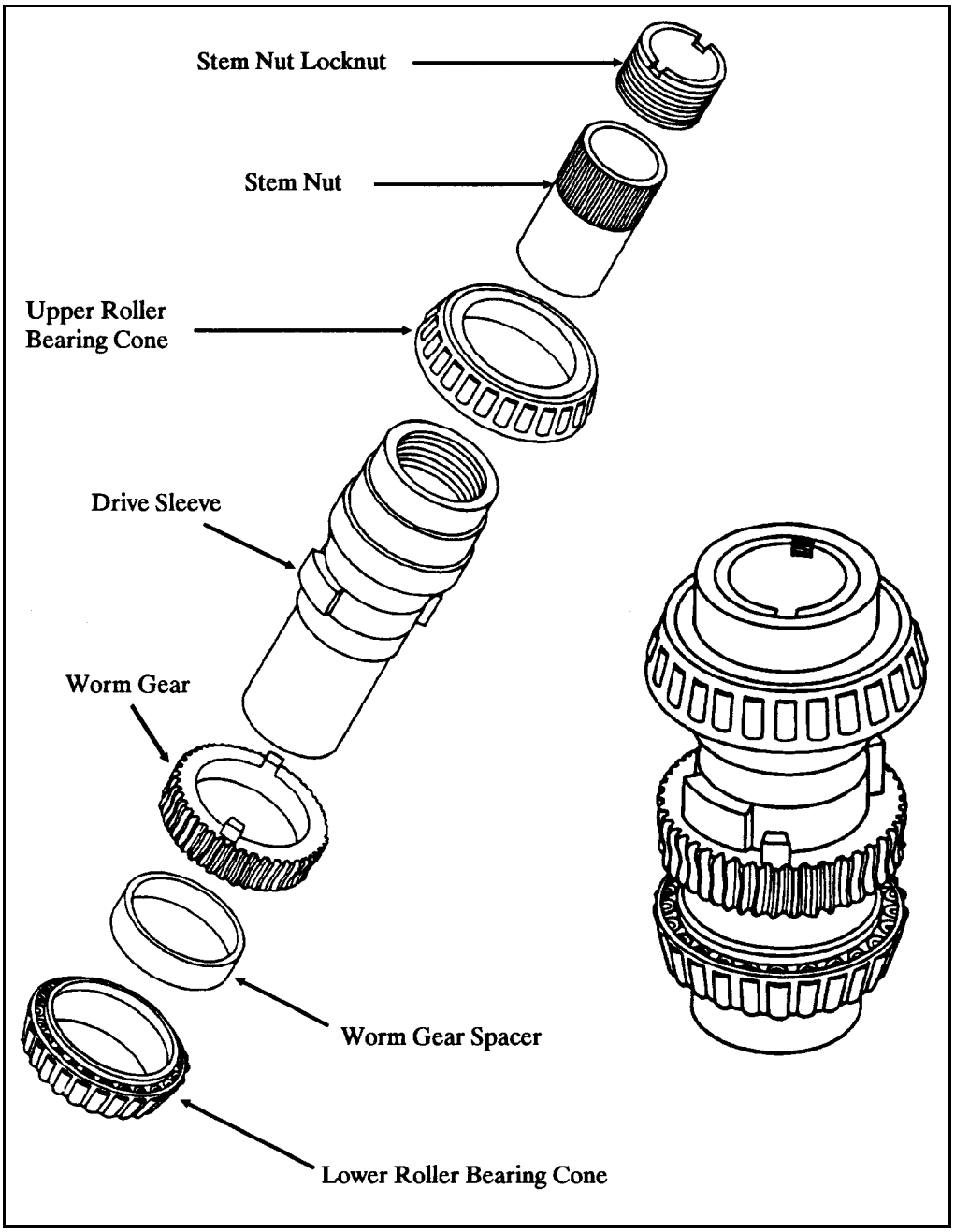

Figure 6-18 Drive Sleeve

22b. <u>Drive Sleeve Disassembly and Inspection</u> Refer to Figure 6-18

CAUTION: Do not apply force to bearing cage when pressing bearing cone on or off unless bearing will be discarded.

1. Set bearing puller and hook on bearing cone's raised flange.

NOTE: If removing lower bearing cone, the puller jaws may be hooked on the worm gear instead. If removing upper bearing cone, protect drive sleeve and internal threads from damage.

2. After removing lower bearing cone, slide worm gear spacer and worm gear off drive sleeve unless removed with bearing.

3. Solvent clean upper and lower bearings and dry thoroughly.

4. Clean bearing cups and inspect for wear or damage. Ensure cups are free of corrosion, brinnelling, or other damage.

5. Clean drive sleeve. Inspect for thread damage, and surface damage causing bearing installation interference or a loose drive sleeve bearing fit.

NOTE: If bearing was loose at original assembly, multiple center punch marks on the drive sleeve bearing mounting area may be found. This is acceptable. More may be needed for a tight fit. Knurling may also be used to make the bearing a light press fit.

6. Inspect drive sleeve and parts for wear and other damage. Replace or repair as required.

23. Drive Sleeve Reassembly and Stem Nut Installation

23a. Drive Sleeve Reassembly

1. Apply a thin film of main gearbox grease to bearing cone inner surface and drive sleeve bearing mounting area.

CAUTION: Apply steady pressure to cone inner race when pressing bearings. Excessive force can damage bearing.

NOTE: Bearings may be installed by either pressing onto drive sleeve, or heated and dropped on drive sleeve.

2. Press upper bearing cone against the drive sleeve shoulder.

NOTE: On convertible drive sleeves, worm gear lug location establishes operation type. Place worm gear lugs in the wide space for lost motion operation (most SMB's). Place in narrow space for no lost motion operation (SB and SBD).

3. Install worm gear with lugs toward drive sleeve lugs (upwards).

4. Install worm gear spacer adjacent to worm gear.

NOTE: If bearing has a loose fit, tighten by staking drive sleeve bearing area in two or more places. Knurling may also be used to make the bearing a press fit.

5. Press lower bearing cone firmly against drive sleeve shoulder. Verify worm gear rotates freely.

6. Pack the drive sleeve bearings with main gear box grease.

23b. <u>Stem Nut Reinstallation</u>

1. Coat stem nut outer surface with an anti seize compound.

2. Install stem nut in drive sleeve.

3. Install stem nut locknut.

NOTE: Some utilities have eased and speeded stem nut locknut removal by using a set screw instead of staking. (This modification is approved by Limitorque for all SMB-0 through 4 actuators.) Perform the following steps to incorporate this change.

4. Tighten stem nut locknut with a special wrench or a soft drift pin while holding drive sleeve with appropriate tool. (strap wrench recommended)

5. Drill and tap for a 10-32 SS set screw in the stem nut locknut to drive sleeve thread interface.

6. Loosen stem nut locknut one quarter turn and retighten. Install set screw.

24. Worm Shaft Reassembly Refer to Figures 6-13, 6-16 and 6-17

NOTE: Coat all parts with a thin film of grease before they are assembled.

1. Check that the worm is a free sliding fit on worm shaft assembly.

2. If removed, install bearing with snap rings on both sides on SMB-0, 1, and 2 actuators. Shoulder two bearings on SMB-3 and 4 actuators. (no snap rings)
3. SMB-0, 1 and 2 only. If removed, install retaining ring against ball bearing on handwheel end of worm shaft.

4. Pack bearing(s) with grease.

5. Place worm shaft bearing cap assembly on worm shaft, flat side toward worm splines.

6. From housing motor end, insert worm shaft with worm shaft bearing cap flat area up until worm shaft bearing cap seats against housing.

7. Install and tighten bearing cap fasteners in a criss-cross pattern.

8. Install clutch fork return spring and washer (spring only on SMB-3 and 4) (SMB-2 has washer towards handwheel clutch pinion, inside) on worm shaft.

CAUTION: The thinner (ID to OD) worm shaft clutch lugs engage the handwheel clutch pinion. The thicker (ID to OD) lugs must engage the worm shaft clutch gear. If installed backwards, clutch failure will occur.

9. Install worm shaft clutch with thinner lugs toward handwheel clutch pinion lugs.

NOTE: Only SMB-0 and 1 actuators have spacers. If spacer is beveled, place bevel toward worm shaft spline.

10. Install worm shaft clutch gear and spacer, bevel toward splines.

11. Push worm shaft clutch gear, compressing clutch fork return spring and install split rings and split ring retainer.

12. Install retaining ring.

25. Worm to Worm Gear Alignment Check Refer to Figure 6-10

NOTE: Perform a worm-to-worm gear alignment check if lower drive sleeve bearing cup was removed. Lower drive sleeve bearing cup location affects worm-to-worm gear mesh.

NOTE: If adjusting drive sleeve height (worm-to-worm gear mesh adjustment) use a temporary, machined down (on the OD) cup to speed shimming and checking. Install permanent cup when shimming and checking is complete.

NOTE: If installed, remove quad ring from actuator housing to prevent damage.

1. Place drive sleeve bearing cup in actuator on trial shim set.

2. Install drive sleeve in actuator without quad ring.

3. Apply non-hardening blueing to worm.

4. Install worm (spring pack assembly) on worm shaft.

NOTE: Worm engagement may be easier if the worm shaft clutch gear is rotated counter-clockwise (viewed from motor end) to engage the worm to the worm gear.
Rotate worm shaft counterclockwise to pull worm (spring pack assembly) fully into the actuator.

5. Turn the worm shaft several turns in each direction to transfer bluing.

6. Remove worm/spring pack assembly and drive sleeve.

7. Examine contact pattern on the worm gear. Contact pattern should be centered top to bottom.

8. Add or remove shims under roller bearing cup to obtain correct pattern. Record final shim thickness.

   Final thickness:_____

26. Seal Retainer Plate Installation Refer to Figure 6-10

1. Coat quad ring with housing grease and install in housing groove.

2. Install seal retainer plate and tighten fasteners in a criss-cross pattern.

27. Drive Sleeve Installation Refer to Figure 6-10

1. Carefully pack upper and lower drive sleeve bearing cones with grease.

2. Verify lower roller bearing cup is permanently installed.

3. Verify housing cover mounting surfaces are clean.

4. Apply a grease coating to the drive sleeve.

CAUTION: Do not cock the drive sleeve assembly when installing. This may damage the quad ring, if installed.

5. Applying firm pressure, install drive sleeve in actuator. When properly installed, drive sleeve will self center.

28. Handwheel Shaft Installation Refer to Figure 6-14

1. SMB-0 through 2 only, install ball bearing nearest handwheel on handwheel shaft.

2. SMB-0 through 2 only, install handwheel shaft bearing retaining ring.

3. Insert handwheel shaft from actuator handwheel side until ball bearing, SMB-0 to 2 only, seats firmly in housing.

4. Install other ball bearing on handwheel shaft from motor end.

5. SMB-3 and 4 only, install bearing retainer plate and fasteners.

6. Install handwheel gear with key on handwheel shaft ensuring handwheel gear fits flat side faces motor end.

7. Place spacer on handwheel shaft against handwheel gear.

8. Install handwheel and key. Install and tighten elastic stop nut.

29. Manual Declutch Shaft Installation Refer to Figures 6-12 and 6-15

NOTE: Coat all parts except declutch lever with a thin grease film before they are assembled.

1. Inspect manual declutch shaft for damage and/or deformation. Verify declutch shaft and drum roll pin are not bent or broken. Replace drum roll pin, if damaged. Replace only if repair is not possible.

2. Place either end of torsion spring end into manual declutch shaft cavity (handwheel end) drilled hole.

3. Insert manual declutch shaft from the handwheel end of the actuator.

NOTE: Be certain shaft keyway is up and toward operator top. The declutch drum roll pin must be to right (clockwise) of torsion spring end as spring is viewed from handwheel end.

4. Temporarily install the declutch lever and key on the declutch shaft.

5. Turn the declutch shaft so the drum roll pin will wind spring when shaft is rotated counterclockwise. Release the declutch shaft.

6. Some actuators have a retaining ring between the declutch link and housing. If so equipped, install retaining ring.

7. With declutch link oriented toward 6 o'clock (pointing downwards, with flat side against actuator housing), rotate the declutch lever until declutch link slides onto the splines. When released, the declutch lever should return approximately to its original position.

8. If originally installed, install snap ring outside declutch link on declutch shaft.

9. Without pulling out the declutch shaft, remove declutch lever and key.

30. Worm-Spring Pack Installation

NOTE: Rotating worm shaft clutch gear counterclockwise (viewed from motor end) while installing worm-spring pack may ease installation. This eases spline alignment. Rotation draws the spring pack assembly into the housing.

1. Install worm/spring pack assembly in actuator

2. Insure wormspring pack assembly is fully seated in actuator housing.

31. Spring Cartridge Cap Installation (New Style) (Multi-Piece) Refer to Figure 6-19

1. Install "O" ring spacer and "O" ring on handwheel shaft.

2. Install "O" ring on declutch shaft.

3. SMB-0 through 2, loosen set screw in spring cartridge cap locknut.

4. Verify the locknut turns freely and rotate counterclockwise 1 to 2 turns.

5. Coat spring cartridge cap gasket with thin grease film.

6. Place spring cartridge cap gasket on housing.

7. Install the spring cartridge cap on the housing with a 3/8 to ½ inch housing clearance.

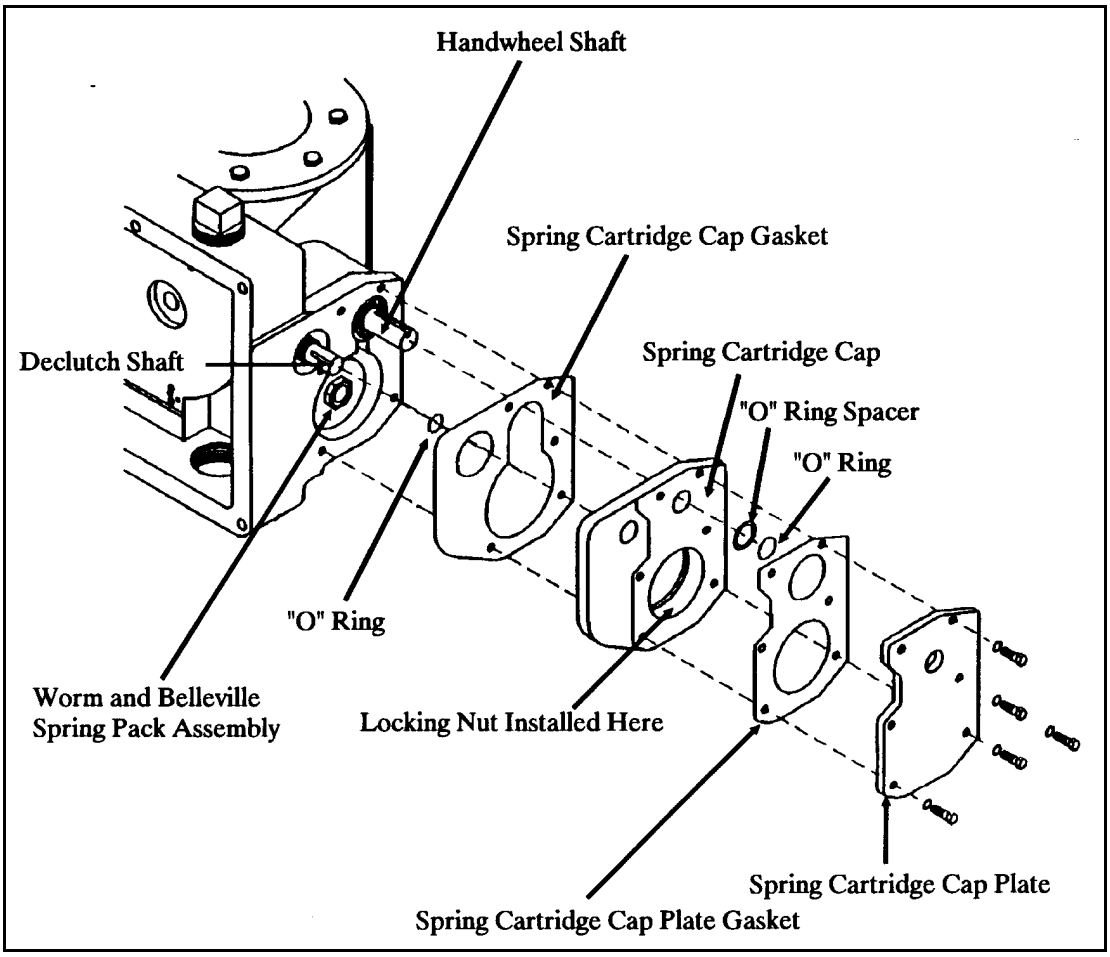

Figure 6-19 Multi-Piece Spring Cartridge Cap

NOTE: On SMB-0 through 2 actuators, when initially tightening fasteners on spring cartridge cap so the locknut can be adjusted to take up spring pack assembly free play, the spring cartridge cap plate will not be installed. On SMB-0 actuators, the standard fasteners may bottom out before spring cartridge cap is torqued. If this happens, use shorter fasteners when adjusting the locknut.

8. For SMB-0 operators, skip 9 through 15 and proceed to step 16.

9. Partially install spring cartridge cap fasteners.

10. Install declutch lever and key.

NOTE: If a snap is heard while installing the spring cartridge cap, the torsion spring has released. The torsion spring tensioning process must be repeated.

11. Depress declutch lever and slide spring cartridge cap against housing once the roll pin on the declutch shaft is behind the roll pin on the spring cartridge cap.

12. Declutch lever may be released but spring cartridge cap must be held tightly against housing.

13. Install remaining spring cartridge cap fasteners and tighten all fasteners.

CAUTION: Do not preload spring pack.

14. SMB-1 and 2, adjust locking nut until light contact is made with spring pack thrust washer.

15. Tighten set screw securely to hold spring cartridge cap locknut.

16. If unit is not SMB-0, proceed to step 25.

17. SMB-0 only, use two 5/16"-18 X 1" bolts and partially install on a diagonal.

18. Install declutch lever and key.

NOTE: If a snap is heard while installing the spring cartridge cap, the torsion spring has released. The torsion spring tensioning process must be repeated.

19. Depress declutch lever and slide spring cartridge cap against housing once the roll pin on the declutch shaft is behind the roll pin on the spring cartridge cap.

20. Declutch lever may be released, but spring cartridge cap must be held tightly against housing.

21. Install remainder of shorter fasteners and tighten.

CAUTION: Do not increase preload of spring pack.

22. Adjust locknut until contact is made with spring pack thrust washer.

23. Tighten set screw securely in locknut.

24. Remove short bolts.

25. Install cover plate gasket and cover plate.

26. Install original fasteners and tighten in criss-cross pattern.

27. Ensure declutch lever key is flush with shaft end.

28. If not already spotted, tighten declutch lever set screw to scribe shaft. If spotted, go to step 31.

29. Loosen set screw and remove declutch lever.

30. Center punch/scribe mark on shaft and drill 1/8 inch nominal deep spot in shaft.

31. Install declutch lever and tighten set screw.

32. Spring Cartridge Cap Installation (Old SMB-0, 1, 2 One Piece Style) Refer to Figure 6-9

1. Measure removed spring cartridge cap gasket thickness. If measuring compressed portion, add 10% to measured value to allow for gasket compression.

NOTE: Insure Belleville spring pack is seated in housing.

2. If no measurement can be performed, hold spring cartridge cap tight against Belleville spring pack thrust washer. Using a feeler gauge, measure spring cartridge cap to housing gap. Measure each corner, average, and multiply by 1.1. The result is gasket thickness. Gasket thickness can affect Belleville spring pack preload or cause a spring pack assembly gap.

3. SMB-0 through 2 only, install "O" ring spacer and "O" ring on handwheel shaft.

4. Install "O" ring on declutch shaft.

5. Apply a light grease coating to spring cartridge cap gasket.

6. Place spring cartridge cap gasket on housing.

7. SMB-3 and 4 only, install handwheel shaft needle bearings and oil seal.

8. Install the spring cartridge cap on the housing with a 3/8 to ½ inch clearance.

9. Partially install spring cartridge cap fasteners.

10. Install declutch lever and key.

11. Depress declutch lever and slide spring cartridge cap against housing.

NOTE: If a snap is heard while installing the spring cartridge cap, the torsion spring released. The torsion spring tensioning process must be repeated.

12. Declutch lever may be released, but spring cartridge cap must be held tightly against housing.

13. Install remaining spring cartridge cap fasteners and tighten all fasteners in a criss-cross pattern.

14. Insure declutch lever key is flush with shaft end.

15. If not already spotted, tighten declutch lever set screw to scribe shaft. If spotted, go to step 18.

16. Loosen set screw and remove declutch lever.

17. Center punch/scribe mark on shaft and drill 1/8 inch nominal deep spot in shaft.

18. Install declutch lever and tighten set screw.

33. Housing Gasket Thickness Determination Refer to Figure 6-10

CAUTION: The housing cover gasket establishes drive sleeve bearing preload. Looseness allows impact loading. Excess tightness increases running loads.

1. Verify housing cover flatness using a straight edge. Old gasket use is permissible if in satisfactory condition and proper thickness. If a major disassembly was performed verify thickness as follows:

2. Install housing cover on housing without gaskets. Tighten at least 4 (evenly spaced) housing cover fasteners finger tight. (Do not over tighten.)

3. Verify proper preload.

   a. Rotate drive sleeve via the worm shaft.

   b. Tighten fasteners one flat at a time in a cross pattern.

   c. When bearing drag is felt, back off fasteners one flat.

4. Using a thickness (feeler) gauge, measure and record gap between housing cover and housing at four points 90 degrees apart.

   a. Thickness 1.___

   b. Thickness 2.___

   c. Thickness 3.___

   d. Thickness 4.___

5. Calculate average value.

   Average value: _____

6. Multiply average by 1.1 (equivalent to adding 10 percent)

   Thickness: _____

7. Remove fasteners and housing cover.

8. Using calipers (more surface area than micrometer, which prevents sinking into gasket) select the proper gaskets to make up the gasket thickness. If available gaskets thickness does not add up to exact amount, go to next available thicker value.

9. Install gasket set.

10. Install housing cover with at least 4 equally-spaced fasteners.

11. Tighten fasteners in criss-cross pattern.

12. Rotate drive sleeve via the worm shaft.

13. If drag is excessive, remove fasteners and housing cover.

14. Add approximately 0.005 inch to gasket thickness.

15. Repeat steps 10 through 12.

16. Continue until drive sleeve rotates with acceptable drag.

34. Housing Cover Installation

1. Coat quad ring with grease and install in housing cover.

2. Coat housing cover gasket(s) with a thin film of grease.

3. Place housing cover gasket on housing and install housing cover aligning match marks.

4. Install and tighten housing cover fasteners in a criss-cross pattern.

5. Rotate drive sleeve via the worm shaft and verify proper bearing preload. (Minimal bearing drag)

35. Clutch Housing Installation

Refer to Figures 6-11, 6-12 and 6-20

1. Inspect declutch fork for damage or distortion, and rollers for flat spots and free movement.

2. Position declutch fork with tripper wedge toward tripper location, and install fork pivot pin.

3. Install fork pivot pin set screw. Apply lubricant to declutch fork clutch rollers.

4. Apply thin grease film to clutch housing gasket.

5. Install clutch housing aligning declutch fork rollers in worm shaft clutch groove and declutch shaft end in clutch housing. Install fasteners.

6. Install declutch shaft extension if equipped. Tighten fasteners.

7. Install clutch trippers. If clutch trippers have splined eccentric bushings, insure match marks are lined up. Insure trippers are installed exactly as removed (on same side, all marks lined up, all spacers, washers etc.). Tighten cap screws. Assure clutch trippers move freely.

8. Rotate declutch lever to place actuator in manual, push clutch trippers together as far as possible. (This eases spring installation.) Install tripper spring (for larger actuators an automobile brake spring tool works well).

NOTE: Insure declutch mechanism works properly before installing motor.

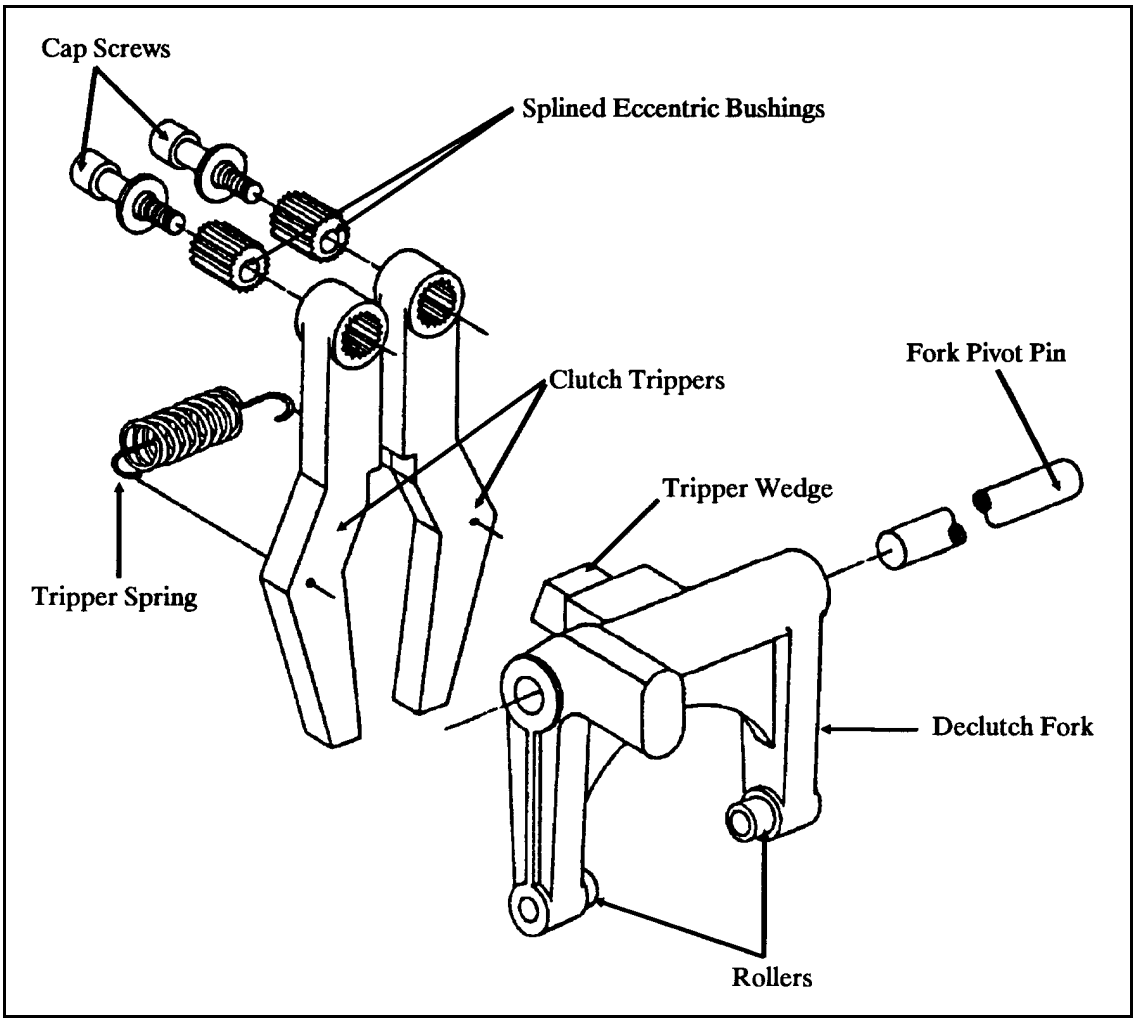

Figure 6-20 Declutch Fork and Trippers

9. Rotate worm shaft clutch gear by hand to insure clutch trippers function properly to return actuator to motor mode. Repeat in opposite direction. Repeat several times in each direction.

Declutch Mechanism Adjustment (Clutch Tripper Splined Eccentric Bushing) See Figures 6-13 and 6-20

NOTE: One clutch tripper notch must be higher than the other. The tripper wedge moves down when the declutch lever is depressed. Both notches must be above the tripper wedge when the declutch lever is depressed fully. Ensure worm shaft clutch gear tripper pin is at a nominal 6 o'clock or 12 o'clock position when adjusting trippers.

NOTE: Tripper notch height controls worm shaft clutch to handwheel clutch pinion engagement. Notches must be low enough to engage the worm shaft clutch and handwheel clutch pinion lugs approximately three quarters (3/4) of their length.

NOTE: The splined eccentric bushing will establish the same notch height at two positions. (i.e. 7:30 and 4:30) However, the notch will be closer or farther from the wedge which affects wedge capture by the clutch trippers. If the notch cannot capture the wedge, rotate the splined eccentric bushing the same distance the opposite side of 6:00 o'clock or 12:00 o'clock, whichever is appropriate.

NOTE: The splined eccentric bushings on newer style clutch trippers are not visible until the clutch tripper cap screws are removed.

NOTE: When declutch fork tripper wedge is in upper position, actuator is in motor mode. When the declutch fork tripper wedge is in lower position under the clutch tripper notches, actuator is in manual mode.

10. Prior to removing the clutch tripper cap screw from a clutch tripper for adjustment, disconnect the tripper spring from the clutch trippers to relieve spring tension. (This is easier if actuator is placed in manual mode first)

11. Place actuator in motor mode if not already there. To adjust the clutch tripper position, remove the clutch tripper cap screw and reposition the splined eccentric bushing in the clutch tripper. Prior to removing the splined eccentric bushing from the clutch tripper, the clutch tripper and bushing alignment should be marked for reference. Rotate bushing, raising or lowering the clutch tripper as necessary.

12. After making clutch tripper adjustments, place in manual and install tripper spring.

13. Test declutch mechanism operation by locating the worm shaft clutch gear tripper pin at approximately the 6 or 12 o'clock position. Depress and release the declutch lever and verify that both clutch trippers rest on the declutch fork tripper wedge with a nominal 1/32 inch height differential, and the worm shaft clutch lugs engage the handwheel clutch pinion by about 3/4 of lug length.

14. Rotate worm shaft clutch gear and verify that the worm shaft clutch gear tripper pin dislodging each clutch tripper from the declutch fork tripper wedge. Verify that the mechanism shifts to motor mode (i.e. worm shaft clutch lugs engage the worm shaft clutch gear).

15. Place tripper pin in the same position as step 4 and 5. Place unit in manual. Rotate worm shaft clutch gear the opposite direction as step 5 and observe the worm shaft clutch gear tripper pin dislodging each clutch tripper from the declutch fork tripper wedge. Verify the mechanism shifts to motor mode (i.e. worm shaft clutch lugs engage the worm shaft clutch gear).

16. Repeat the adjustment process until the mechanism operates properly.

36. Handwheel Installation Refer to Figure 6-14

NOTE: Adding a handwheel shaft spacer can reduce the actuator damage possibilities. The spacer is a simple washer.

1. Install spacer (if required) and handwheel key in handwheel shaft keyway.

2. Apply thin lubricant or anti-seize coating to handwheel shaft and key. Install handwheel on handwheel shaft.

3. If not already spotted, tighten handwheel set screw(s) to scribe shaft. If spotted, go to step 6.

4. Loosen set screw and remove handwheel.

5. Center punch shaft/scribe mark and drill 1/8 inch nominal deep spot in shaft.

6. Install handwheel and tighten set screw(s).

37. Motor Bearing and Pinion Checkout Refer to Figure 6-21

1. Remove lubricant from motor shaft, end plate and pinion. While holding motor shaft, check pinion and lockwire for looseness and ensure the pinion is snug against the shoulder.

NOTE: Any looseness is unacceptable. The pinion is keyed and set screwed to the motor shaft.

2. On environmentally qualified actuators, if required, verify that motor T-drains are installed at lowest point of motor for condensation drainage. Verify T-drains are not fouled or clogged (painted over, etc.). Verify plastic cap has been removed.

3. Check the motor housing for cracks.

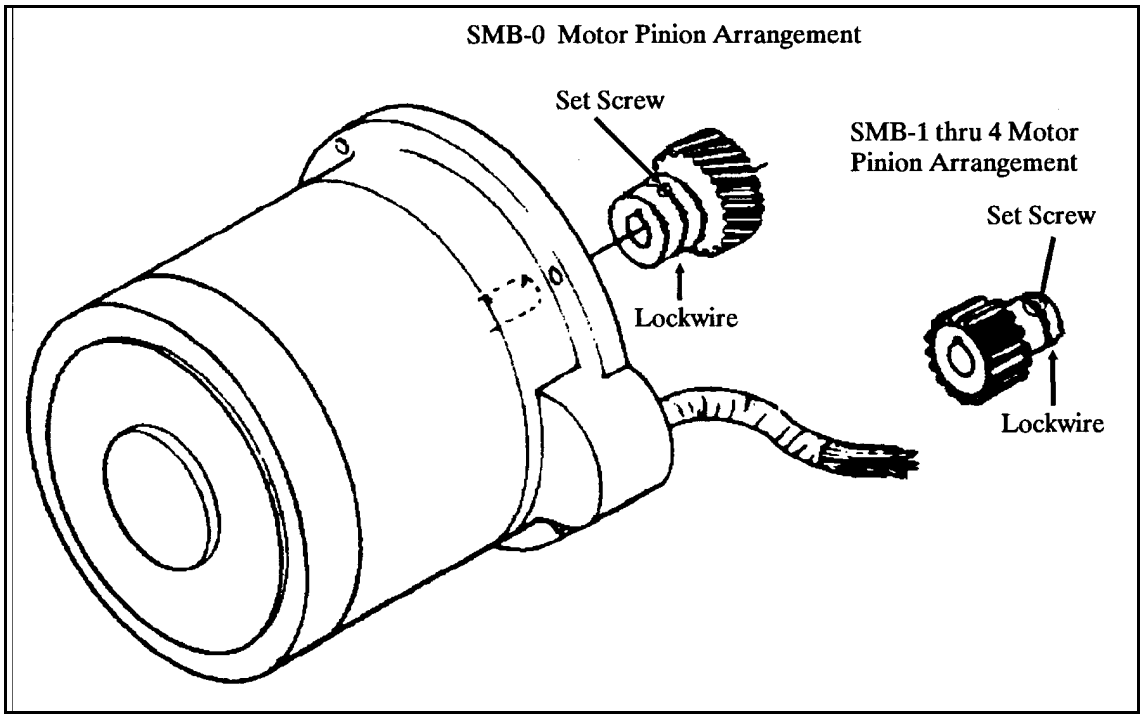

Figure 6-21 Motor Pinion Arrangement

4. Examine motor housing for discoloration, or overheating signs.

5. Check motor shaft bearings for roughness and looseness. Looseness can be detected by applying a working motion (up, down, side-to-side) to the motor shaft end (pinion). Any bearing looseness is unacceptable.

NOTE: Replace both the pinion and worm shaft clutch gear if either shows wear. Either gear may be replaced singly for reasons other than tooth wear. Slight deformations (nicks, scratches, etc.) may be removed using a fine file and emery paper.

6. Check pinion teeth for signs of excessive or abnormal tooth wear. Replace as necessary.

7. Check shaft end for cracks at keyway corners.

CAUTION: SMB-0 only: Ensure motor pinion set screw and lockwire are positioned closest to motor. SMB-1 through 4 only: Ensure motor pinion set screw and lockwire are positioned away from motor.

8. If replacing motor, cut and remove lockwire, loosen set screw, transfer pinion and its set screw to new motor shaft snugly against the shoulder. Spot drill motor shaft to accept set screw. Ensure set screw is placed on motor shaft closest to the motor for SMB-0, and furthest from the motor for SMB-1 through 4, then reinstall lockwire or Loctite set screw.

9. Check motor gasket for compression set or damage; replace as necessary.

10. Inspect worm shaft bushing.

11. Pack actuator clutch housing with grease. Do not overfill.

12. Feed motor leads through the clutch housing motor gasket, motor conduit nipple, and limit switch compartment port.

13. Install motor using fasteners with washers and tighten.

38. Limit Switch Finger Base Installation Refer to Figures 6-5 and 6-22

1. Ensure terminals are identified and mounting holes are debris free.

2. Without forcing, install finger base on rotors.

3. Secure using two fasteners and washers. Do not over tighten.

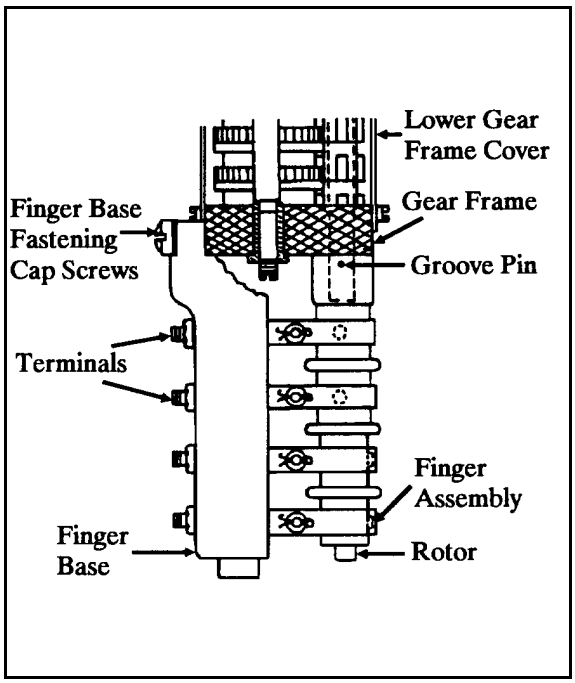

Figure 6-22 Line Switch Rotor Replacement

4. If not done earlier, inspect the limit switch L-bracket tension to the extent possible, as follows:

   a. Made (closed) contacts should have a gap between the L-bracket and the finger assembly at the L-bracket uppermost tip.

   b. Open contacts should have the finger assembly contacting the rotor. The close contact gap may be present, but is not required.

   c. The L-bracket may be bent to achieve a gap.

   d. Inspect rotor contacts for wear, fouling, corrosion, and damage. Clean as required by burnishing, spraying with solvent, and wiping with a clean, dry cloth. Excessively worn or pitted finger assemblies or rotor contacts should be replaced as a set. Rotors should be replaced as a set.

   e. Inspect rotors for double-drilled roll pin fastener holes. See the double-drilled hole illustration. (Figure 6-6) Replace if necessary.

   f. Inspect rotors for cracks, especially in the roll pin area. Replace cracked rotors.

   g. Inspect for slight rotor to limit switch gear frame clearance. Rotor to gear frame rubbing may cause excessive drag.

   h. Inspect rotors for straightness (contacts must be able to mate).

   I. Inspect finger base for cracks, especially in the area around finger base to gear frame mounting fasteners. Replace cracked finger base.

   j. Inspect limit switch finger assemblies for loose or missing parts such as springs, cotter pins, etc.

39. Two Train Limit Switch and Cartridge Installation Refer to Figure 6-23

NOTE: Actuator may be filled with grease through the limit switch opening at this time.

NOTE: Only brown (Fibrite) or Gray (Melamine) materials are approved for environmentally qualified actuators in harsh environments (inside primary containment or HELB areas).

1. Ensure drive pinion is not damaged or loose. Replace cartridge if necessary.

2. Install a new, or otherwise intact, lubricated correct material "O" ring on cartridge shaft.

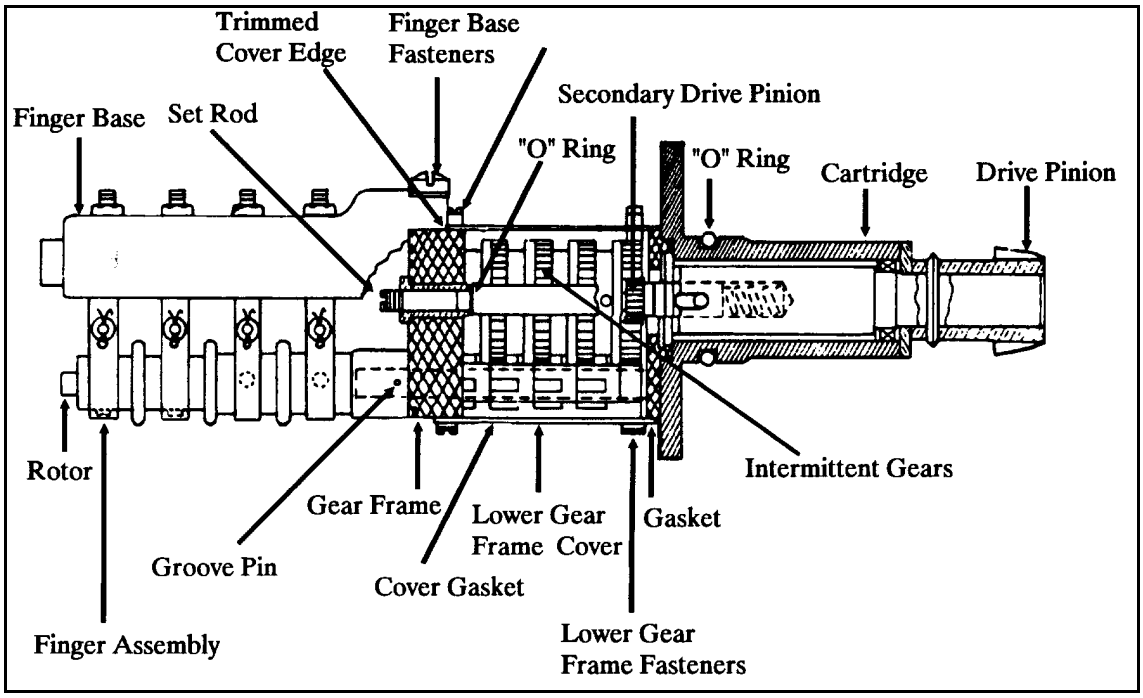

Figure 6-23 Limit Switch Section View

3. Install shims, as applicable, underneath the cartridge.

4. Install cartridge in the actuator housing, inserting cartridge geared end in housing, meshing drive pinion with worm shaft threads.

5. Install limit switch cartridge to housing with proper fasteners. Install gear frame to cartridge with proper gasket and fasteners; line up match marks; tighten fasteners.

6. Place actuator in manual mode; back out set rod; turn handwheel and ensure intermittent gear shafts rotate. (Instructor will identify these on your training aid.)

7. Turn set rod clockwise to disengage limit switch gear train from actuator drive train.

8. Record limit switch plastic color and gear frame material.

   Rotors:_____

   Finger Base:_____

   Gear Frame Material:_____

40. Four Train Limit Switch Cartridge and Gear Frame Installation Refer to Figure 6-4

NOTE: Actuator may be filled with grease through the limit smith opening at this time.

NOTE: Only brown (Fibrite) or Gray (Melamine) materials are approved for environmentally qualified actuators in harsh environments (inside primary containment and HELB areas).

NOTE: A pebbly surface on the limit switch gear frame indicates a bronze casting usable on environmentally qualified actuators in containment. A smooth gear frame surface indicates an aluminum limit switch. Determine housing material by gear frame surface finish because gear frame color can be misleading.

1. Secure gear frames to cartridge using proper gaskets, two fasteners and washers each.

2. Install each match marked gear frame to its location.

3. Record limit switch plastic color and gear frame material.

   Rotors upper:_____

   Rotors lower:_____

   Finger base upper:_____

   Finger base lower:_____

   Gear frame material upper:_____

   Gear frame material lower:_____

4. Ensure drive pinion is not damaged or loose. Replace cartridge if necessary.

5. Install a new, or otherwise intact, lubricated correct material "O" ring on cartridge shaft.

6. Install shims, as applicable, on the cartridge.

7. Install cartridge in the actuator housing, inserting cartridge geared end in housing, meshing drive pinion with worm shaft threads.

8. Install cartridge to actuator using fasteners and tighten.

9. Place actuator in manual mode; back out set rods; turn handwheel and ensure intermittent gear shafts rotate. (Instructor will identify these on your training aid.)

10. Turn set rods clockwise to disengage limit switch gear train from actuator drive train.

41. Torque Switch Installation Refer to Figure 6-7 and 6-8

Note: Torque switch shafts vary in length and pinion gear diameter. Shaft length is as follows:

SMB-0	3 1/4"
SMB-1	3 ½"
SMB-2	3 13/16"
SMB-3 & 4	4 9/16"

A too long or too short shaft results in a non-functioning switch.

NOTE: If torque switch is replaced, remove torque maximum setting limiter plate from old switch (if equipped) and install it or one of equivalent setting value on the replacement switch.

1. Observe control lead identification is intact, and labeled on limit switch finger base terminals.

2. Verify a new, or otherwise intact, lubricated "O" ring of approved material is installed before torque switch reinstallation.

NOTE: Setting torque switch at 1 OPEN and 1 CLOSED eases proper reinstallation, this fixes mounting bracket to dial and pinion location.

3. Verify torque limiter plate (if required) is installed, and torque switch settings are 1 and 1.

4. Install any shims between the torque switch and housing from disassembly with the replacement torque switch.

5. Verify the torque switch pinion has a roll pin.

6. Back out positioning screws to shoulders.

7. Install torque switch; if mounting bracket holes do not line up with mounting holes, rotation of mounting bracket may be required. Rotation is acceptable as long as shoulders on dial do not touch actuating link . If actuating link touches dial shoulders, back out torque switch, rotate so a different thread on pinion contacts grooves on spring pack bearing cartridge cap, and reinstall.

8. Ensure torque switch base is flush with housing. Tighten mounting fasteners.

9. Run positioning screws in so they just touch actuating link (do not force) and lock with locking nuts (torque switch is now balanced).

10. Grasp dial, attempt to rotate in both directions. If dial rotates, installation is not correct. Pinion may not be engaging grooves on spring pack bearing cartridge cap properly.

11. If dial does not rotate, engagement is correct.

12. Open and close settings can now be set according to provided documentation.

NOTE: This concludes the tasks to be performed in the classroom. Allow the instructor to examine your actuator for proper operation.

42. Actuator Lubrication

CAUTION: Do not mix lubricants

CAUTION: Quantity of grease needed depends on actuator's orientation. Check lubrication after actuator installation. Verify that worm and motor pinion are immersed in grease. Do not completely fill the housings with grease.NOTE: Actuator grease requirements depend on size. Approximate quantities can be found on Table 6-2.

Size	Gallons	Weight
SMB-0	1.0	9.5 Pounds
SMB-1	1.5	14.5 Pounds
SMB-2	1.75	17.0 Pounds
SMB-3	5.5	50 Pounds

Table 6-2 Grease Requirements

NOTE: The actuator should be manually cycled after lubricant filling. This releases air pockets and voids in the grease.

NOTE: This may be a check item if the actuator was filled earlier as it was assembled or through the limit switch opening.

1. Fill the housing through the upper lubrication ports.

CAUTION: Do not add lubricant to the motor.

2. Ensure clutch housing is filled properly.

43. Actuator Installation

1. Reinstall limit switch compartment cover and gasket. Move actuator to valve.

2. Remove temporary stem thread protection, if installed.

3. Clean and lubricate stem threads with approved lubricant, if not done earlier.

CAUTION: Do not lift the actuator by the handwheel or declutch lever.

4. Remove stem nut and rig actuator.

NOTE: Align actuator to yoke match marks during installation.

CAUTION: Do not balance actuator on the valve stem. This can bend the valve stem.

5. Carefully lower actuator over valve stem aligning match marks.
6. Install actuator fasteners hand tight.

NOTE: Actuators on valves with integral stem nuts or rotating stem valves do not have stem nuts. For rotating stems, skip to step 10.

7. Thread stem nut on stem until it contacts drive sleeve.

8. Rotate handwheel in open direction, engaging stem nut and pulling it into drive sleeve until it bottoms.

9. Install stem nut locknut, tighten, and install locking set screw or stake.

NOTE: Fastener torques may be critical for normal operation or seismic qualification.

10. Torque actuator fasteners in three passes to required values.

    Final torque:_____

11. Remove valve stem clamp (if installed).

12. Install stem protector and indicator rod (if equipped).

13. Obtain operations approval to stroke and setup valve.

C. Design and Modification Changes

Spring Cartridge Cap

The SMB-0, 1 and 2 size actuators originally had a one-piece spring cartridge cap. This cap was changed to a two piece design when different length spring packs were required. The different length spring assemblies are accommodated by the use of an adjustable locknut which fits against the outer thrust washer of the spring pack. The adjustable locknut threads in and out of the spring cartridge cap, and is locked in place by an internally accessible set screw.

NOTE: New SMB 0, 1 and 2 Belleville spring packs will not fit properly in one piece spring cartridge caps. If installing a new replacement spring pack, a new multi piece spring cartridge cap must be installed.

Handwheel Shaft Spacer

In approximately 1981, spacers began being installed between the handwheel and the spring cartridge cap. This spacer limits internal damage due to handwheel shaft axial movement. The modification can be made to earlier actuators.

Hydraulic Lock Modification to Housing

To prevent grease filling the spring pack cavity and causing hydraulic lock of the spring pack, internal grease return paths were added to the actuator housings starting in approximately 1974. The most frequently used methods are:

SMB-0 actuators have approximately a ½ inch passage milled between the spring pack area and the housing handwheel shaft opening.

SMB-1 and 2 actuators have a machined area at approx. 10:30 along the spring pack area.

SMB-3 and 4 actuators may have one of two different paths. One path is a semi-circular area in the housing around the spring pack opening at 9 to 10:30. Newer spring cartridge caps have a passage from the spring pack area to this area. Some housings have semi-circular areas at 12.00 and 6.00 along the spring pack area.

The above housing modification changes were incorporated in actuators with serial numbers greater than 185252.

Limitorque put out maintenance updates 88-2 and 90-1 which address hydraulic locking of the spring pack. 88-2 has drawings and dimensions for housing and spring pack machining modifications which assist in eliminating hydraulic lock of the spring pack.

An external grease passage modification which uses external tubing can be installed in lieu of machining. The external passage is not recommended due to danger of damage and the requirement of periodic cleaning to remove old hardened grease which will block the tubing.

Spring Pack Hydraulic Lock Changes

Starting in 1988, in new spring packs, Limitorque began machining slots in the spring pack torque limiting sleeve and holes in the spring pack thrust washers.

Spring Pack Washer Orientation

In 1988, Limitorque changed the orientation of the Belleville springs in spring packs with an even number of washers. The washers are now installed so the outer spring washer wide face contacts the thrust washer. Refer to Figure 6-24 for correct orientation.

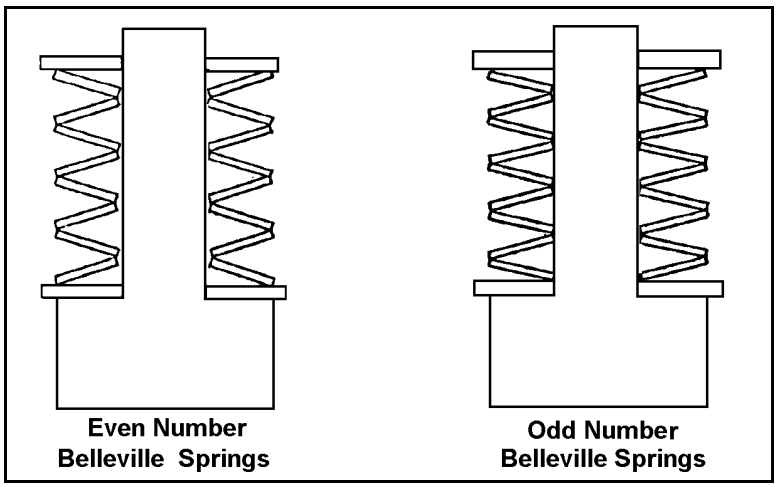

Figure 6-24 Belleville Washer Orientation

Declutch Shaft

Several methods have been utilized to prevent the declutch link from falling off the declutch shaft when the spring cartridge cap is removed. The original design had no declutch link retainer. Retaining rings have been placed between the declutch link and the housing, or outboard of the declutch link, or both. A declutch shaft extension was added to SMB-0 operators shortly after production started.

Declutch Fork Return Spring

The early version of this spring was a torsion spring on the declutch fork shaft. This design was later changed to the spring on the worm shaft. Early actuators had clutch travel limited by an adjustment bolt on the declutch fork. No exact replacement parts are available. If parts require replacement, a new style clutch housing, the clutch fork assembly, worm shaft bearing cap, handwheel clutch pinion, handwheel gear, and fork return spring are needed.

Worm Shaft Bearing Cap and Handwheel Gearing

The worm shaft bearing cap design has changed from a cap with an internal diameter surface which was a rounded casting to a new machined design which has square edges. The handwheel clutch pinion and handwheel gear have also changed. No early design replacement parts are available. If new parts are required, the entire assembly must be replaced.

SMB-0 Clutch Tripper Adjustment

SMB-0 (only) clutch tripper had splined eccentric bushings installed in the openings to aid in height adjustment. By rotating the eccentrics the clutch tripper height is changed.

Housing Grease Relief Vent

A housing pressure relief vent was installed during actuator qualification testing in harsh environments. The vent provides a relief path if housing pressure increases due to high temperature. The vent is only required on EQ actuators which operate in containment and HELB (High Energy Line Break) areas. The vent is a spring loaded check valve which is installed in one of the upper housing inspection ports. The vent is shipped with a protective plastic cap which must be removed for proper operation.

T-Drains

T-drains provide a condensation drain path from the actuator. The T-drains are required on inside containment and HELB area motors that must operate long term post accident. Limit switch compartment T-drains may be installed where condensation or other liquid entry into the limit switch compartment is a possibility. T-drains should not be painted over or mistaken for a grease fitting.

Seal Material

EQ actuator seals were changed to Viton from Buna-N. Viton has better heat resistance and higher resistance to damage.

Plastics

Limitorque changed EQ qualified plastic types in 1979. Melamine, which is either a gray or white color, was replaced by Fibrite, which is brown in color. Fibrite is a glass filled phenolic which is more crack resistant than melamine.

Torque Switches

In addition to the change to Fibrite for plastic parts, the torque switch metal parts were changed to bronze from aluminum. The dial was changed to a full circle with serrations on the back. The serrations mated with serrations on the pointer. This arrangement gave greater assurances that the selected torque switch setting would not change accidently. The balancing set screws were changed from the bottom to top to make balancing easier. Double contact arm return springs were added.

SMB-4 Actuators

Prior to 1970 SMB-4 actuators were SMB-4T (torque) actuators with a thrust adaptor. The design was changed to the SMB-3 type. Housing stiffness increased and the drive sleeve was located by tapered roller bearings instead of bronze sleeves. Yoke mounting fastener bolt circle, number and size remained the same.

Limit Switch Gear Frame Cover Labeling

To prevent gear frame cover installation with the bowed ends pointing inward and creating a gap which could leak grease, the covers are now stamped "THIS SIDE OUT" on the outside surface.

SMB-2 Ratio Limitation

Limitorque found that failure of the helical gear set on SMB-2 actuators with an overall ratio less than 55.84 was possible. This failure could occur when the actuator returned to motor operation from manual when the valve was tightly seated. The gear teeth may fail when this occurs. Limitorque recommended changing the ratio to some ratio greater than 55.84 or removing the clutch trippers. Changing the ratio to a higher ratio increases the stroke time, while removing the clutch trippers requires the actuator to be held in the manual mode when using the handwheel. Some utilities have limited placing the units in manual and periodically inspect the helical gear set.

D. SMB-0 Thru 4 Failure Modes

Due to differences in construction, and in some cases, motors, the actuators can fail differently than SMB-000 and 00.

Torque Switches

Different torque switch problems are:

- Improper installation or replacement
- Corrosion
- Loose fasteners
- Contact finger compression spring tension
- Maximum stop setting limiter plate transfers
- Torque switch unbalance

Improper Installation or Replacement

The actuator must be in the lost motion area when the torque switch is replaced or installed. If the valve is torqued closed when the switch is replaced, the switch being removed will be rotated from the neutral position. Installation of the replacement switch would have to be in the same rotated condition for proper operation. Repeating the same rotation and torque switch set-up is extremely difficult. If the replacement switch is installed in the neutral position while the actuator is in a torqued condition it will be extremely unbalanced, torquing out with almost no load in one direction, and possibly being unable to torque out in the other direction. This can lead to valve or actuator damage, possibly with motor stall.

NOTE: "Lost motion" is the area where the drive sleeve lugs and worm gear lugs are not in contact. In this area, worm gear movement does not cause stem motion. The movement is "lost." This is why it may take many handwheel turns to reverse valve direction. **The handwheel turns freer in the lost motion area than when stroking the valve.** Only the worm gear is rotating. From the closed position this is very noticeable. If observable, the drive sleeve will not rotate with handwheel motion when in the "lost motion area."

Corrosion

The older "clamshell" torque switch may corrode and bind if moisture enters the limit switch compartment. The metal parts were die cast aluminum. The switch only had one contact block torsion spring.

If moisture enters, corrosion and binding between the shaft and arms can occur. There is only one contact block torsion spring holding the contact finger in contact with the terminal studs. Binding between the arms and the shaft (their pivot point) can cause the switch to open with very little spring pack compression.

The later "full circle" switch has bronze metal parts and two torsion springs. Bronze is less likely to corrode and bind than aluminum. In addition, the two torsion springs exert more force. This provides more force to break any corrosion binding.
If moisture or evidence of moisture is found, verify that the torque switch contact arms move freely.

Loose Fasteners

Loose torque switch fasteners can cause a variety of problems. Loose terminal studs can cause premature operation or delayed operation. If the positioning screws loosen to the extent that they allow the dial to slip, greater spring pack compression must occur for switch operation. The mounting bracket screw has limited thread engagement. If it loosens, greater spring pack compression for switch operation must occur.

Any condition which delays switch operation or causes increased spring pack compression increases output. This can cause valve or motor damage.

When doing a limit switch compartment inspection, verify **ALL** the torque switch fasteners are tight.

Contact Finger Compression Spring Tension

The contact finger compression spring is available on special request with various tensions. If severe vibration causes a sporadic torque open condition, a higher force compression spring may eliminate the problem.

Maximum Stop Setting Limiter Plate Transfers

Maximum stop setting limiter plates are not interchangeable between old clamshell and new full circle torque switches. The old switch limiter plates have bent tabs. The new switches use flat limiter plates.

Torque Switch Unbalance

SMB-0 through 4 torque switches can engage the spring pack in various positions, (any pinion tooth in the bearing cartridge cap grooves) instead of the single position of a SMB-000 and 00 switch. Their balance is affected by position of the mounting bracket, pinion to bearing cartridge cap engagement, and dial to actuating link engagement. The torque switch must be in the actuator for balancing because the first two factors can only be determined with the switch installed.

Torque switches must be rebalanced anytime they are removed and reinstalled or replaced.

Declutch Shaft Problems

Different declutch shaft problems are due to different clutch operation, physical location, and for SMB-0, size. The problems are:

- Bent roll pins
- Twisted or sheared declutch link splines
- Declutch link loss

Bent Roll Pins

The SMB-0 through 4 declutch shaft lever does not remain depressed, but automatically returns to the normal position when the unit is placed in manual. Roll pins are installed to limit declutch shaft rotation. If the declutch lever is forced back beyond the normal position a roll pin will be damaged. After actuator reassembly the worm shaft clutch/handwheel clutch pinion engagement will normally limit travel in the other direction.

Functionally, this is not a problem. Correction can be deferred to the next overhaul or convenient maintenance period. However, it shows a lack of plant operations training. If the declutch lever remains is the depressed position after being placed in manual, the lever can rapidly return to its normal position when the motor is started. The lever should only be operated in the direction of the arrow on the lever.

The major reason for roll pin damage is not preloading the declutch shaft during reassembly. If the declutch lever is not depressed during spring cartridge cap installation the declutch lever drum roll pin will be on the wrong side of the spring cartridge cap roll pin. The first time the unit is placed in manual the roll pin will be damaged, and thereafter the declutch lever will return to the vertical position. This condition does not interfere with operation of the unit, but does indicate poor maintenance practices.

Use of proper operations and maintenance procedures will preclude this type problem.

Twisted or Sheared Declutch Link Splines

This problem normally occurs only on SMB-0 operators. The splines on SMB-0 declutch shafts are small compared to SMB-1 through 4 operators. Due to this small size, excessive force on the declutch lever can twist the declutch link mounting splines and in extreme cases, shear them. If sheared, the actuator cannot be placed in manual.

Excessive force can be applied while placing the unit in manual and expecting to hear a click. You may not hear a click. Release the lever and turn the handwheel to determine if the actuator is in manual. Operator training can reduce this type failure.

Declutch Link Loss

Spring cartridge cap removal may cause the declutch shaft to move backward enough to have the declutch link become disengaged with the declutch shaft splines, or drop off the end of the declutch shaft inside the clutch housing. If this happens the unit cannot be put into manual. In addition, the declutch link could possibly jam the gearing. Some actuators have snap rings installed on the declutch shaft to prevent the declutch link from sliding off the declutch shaft, or prevent the declutch shaft from sliding backwards, or both. If the declutch link falls off, the motor and clutch housing have to be removed before the link can be replaced.

Using proper disassembly procedures and switching to a later version declutch shaft which has snap ring grooves can help prevent this problem.

Soft Clutch Problems

"Soft clutch" worm shaft clutch gears are made up of several pieces which can fail, deteriorate, or loosen. The problems are as follows:

- Shell cracking
- Elastomer deterioration
- Shell to worm shaft gear separation

Shell Cracking

"Soft clutch" worm shaft clutch gears are used on actuators with AC 3600 rpm motors and compound wound DC motors. They are used to cushion clutch engagement from manual operation and drive sleeve lug engagement. They consist of a shell with the clutch lugs and the worm shaft gear. Since the shell has a thin section and cushions impact loads, it can crack.

Soft clutch shells should be inspected for cracks at overhaul or if the motor is removed for some reason.

Elastomer Deterioration

The shell and gear are connected by internal lugs and elastomer spacers. The elastomer spacers cushion the impact loads. Due to their type of service and construction, they deteriorate with time.

Soft clutches should be inspected for excessive play at overhaul. In addition, a service life could be established, based on experience.

Shell to Worm Shaft Gear Separation

The shell is held on the gear by four set screws. These set screws are staked or Loctited. If they loosen, the shell can slide on the gear lugs. When the unit is placed in manual, the shell can slide and **REMAIN ENGAGED** with the motor. The tripper pin on the shell moves out of position and will not contact the trippers. On next motor operation the motor will drive the handwheel along with the valve. It will **NEVER** disengage from the manual mode. The handwheel can reach high speeds and cause physical damage and/or self destruct.

Soft clutch shell set screws should be inspected carefully at overhaul or if the motor is removed for some other reason.

Motor Magnesium Rotor Problems

Some motor rotors squirrel cage windings are magnesium instead of aluminum. This is done to provide a lighter rotor which limits rotor inertia. Inertia can cause damage or problems on torque seated valves by over stressing the valve and/or actuator. One vendor's testing found the rotor shorting rings separate from the rotor bars under a LOCA environment. Due to this, the affected plants must position these valves so they can tolerate failure within a certain number of days from the LOCA event. One utility has found end ring deterioration on in service valve motors.

Shorting Ring Separation

Vendor testing found that in the high temperature high humidity post LOCA environment, the squirrel cage winding separates from the rotor bars. When this occurs the motor will not operate or will not develop rated torque. Limitorque has a low priority program to develop an alternate design. Until it is available special measures must be taken for magnesium rotor motors subject to post LOCA high temperature and humidity environments. The valve must be positioned so that a failure to operate is tolerable within a certain number of days from the LOCA onset. Motors above a certain size generally have magnesium rotors. Contact Limitorque with all the motor name plate data to positively determine rotor material.

Shorting Ring Deterioration

One utility performed a series of motor rotor inspections using borescope. The borescopic inspections found signs of rotor corrosion and heating. These motors normally were in an inerted atmosphere. They had not been operated in an abnormal manner. They appeared to be operating normally.

The borescope inspections were done through motor end bell pipe plugs. Each access port allowed inspection of approximately 180 degrees of the shorting ring. The inspections were done with the motor in place.

Heating indications included discolored paint, melted metal balls on the end ring, and cracks in the end ring.