OPERATING AND MAINTENANCE INSTRUCTIONS
R7021 TRANSPORT CONTAINER

Design Approval	D W Rogers (signature) date: 05/07/2011
Management Approval	R J Rees (signature) date: 07/07/11
Quality System Approval	B Patel (signature) date: 15 July 2011
Date Implemented	

INDEX

SECTION	TITLE
1	Purpose and Scope
2	General Precautions
3	Regulations
4	General Information
5	Loading
6	Preparation for Despatch (loaded)
7	Carrier Information
8	Receipt and Unloading
9	Preparation for Despatch (empty)
10	Turnround inspection
11	Scheduled inspection and maintenance

Appendix: Vacuum Drying and Backfilling Procedure for Wet Loaded Flasks

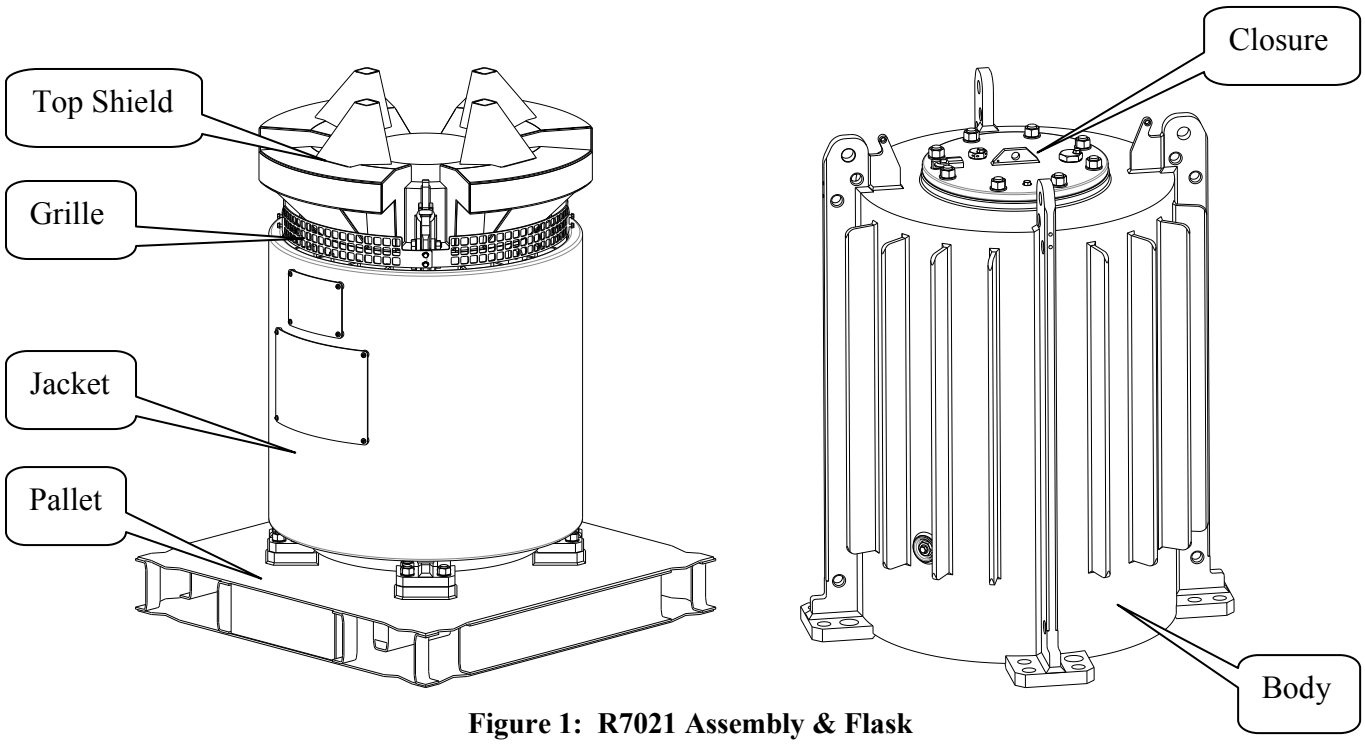

Figure 1: R7021 Assembly & Flask

1. PURPOSE AND SCOPE

This document is intended to provide operators with the minimum information necessary to safely handle, load, unload, ship and maintain the R7021 transport container. It does not cover requirements which are a matter for agreement between consignor and consignee, such as care of the contents.

2. GENERAL PRECAUTIONS

2.1. The container should only be operated by personnel suitably trained in handling radiation sources and heavy equipment and operating vacuum and pressurised gas equipment, or by trained assistants working under their direct supervision.

2.2. It is recommended that all operators write work instructions incorporating all additional requirements or constraints. Checklists are recommended for all operations and are mandatory for sections 5, 10 and 11 of this document.

2.3. The container may only be used for purposes agreed by REVISS Services (UK) Ltd.

2.4. No modifications or repairs may be made unless agreed by REVISS Services (UK) Ltd.

2.5. Your safety adviser should consider the following actions:

- Plan operations to minimise dose uptake.
- Assign responsibilities.
- Provide suitable radiation and contamination instruments and dosimeters.
- Rehearse operations.
- Prepare contingency plans.

2.6. If a container is lost, notify the owner immediately. It may also be necessary to notify your local and/or national regulatory authorities.

2.7. Store a loaded container in a restricted area. This should be secure and typically have a dose rate no more than 2.5μSv/h at its boundary.

2.8. Always quote activity as content not output. Output activity is only used for dose rate calculations. It does not take account of self-absorption within the capsule. The content activity can be significantly higher. If in doubt, consult the source Design Authority.

3. REGULATIONS

3.1. Before making any shipment of the R7021 ensure you have a valid transport certificate (which will specify the correct issue of this document) and have complied with any supplementary conditions therein.

3.2. Personnel handling, shipping or storing radioactive materials must comply with all in-house, local and national regulations, as applicable. In addition:

- In most countries, the regulations are based on the International Atomic Energy Agency (IAEA) regulations and codes of practice.
- International transport is governed modally by IATA and ICAO (air) and IMO (sea).
- Road and rail transport within most of Europe is governed by ADR/RID.
- Road and rail transport within the USA is governed by the regulations of the US Department of Transportation in 49CFR "Transportation".

3.3. The UK license is acceptable in most countries. Exceptions include, but are not limited to, the USA, Canada, Russia and Japan where license validation is required and certain restrictions may apply depending on the circumstances. Some, but not all, of these exceptions are listed as variations in the modal regulations. It is the consignor"s responsibility to comply with the regulations of each and every country entered, transited or overflown.

3.4. Shipments of more than 1.0 PBq (27.0 kCi) require the competent authorities of each and every country entered or transited to be notified in advance.

3.5. Shipments of more than 1.2 PBq (32.4 kCi) cobalt are not permitted by air.

3.6. Shipments of more than 2.08 PBq (56.2 kCi) cobalt must be made under Exclusive Use conditions.

3.7. Shipments of more than 6.0 PBq (162 kCi) caesium are not permitted by air.

4. GENERAL INFORMATION

4.1. DESCRIPTION

The R7021 assembly consists of a lead shielded, stainless steel flask mounted on a pallet and protected from fire and impact by a jacket and top shield. The flask is designed to be pond operated and therefore the cavity is equipped with a drain tube at its base and a vent hole through the closure. As it is also designed to transport non-Special Form material the closure and the drain and vent plugs are each equipped with an O-ring seal and a test point.

4.2. DIMENSIONS AND NOMINAL WEIGHTS

Item	Dimensions (mm)	Weight (kg)
Assembly (max gross)*	1260 x 1260 x 1670	4460
Assembly (net)		4435
Top shield	Ø1060 x 435	205
Jacket	Ø964 x 965	342
Pallet	1260 x 1260 x 210	248
Flask (max gross)	960 x 960 x 1160	3657
Flask (net)		3632
Closure	Ø416 x 322	156
Contents	Ø150 x 476 max	25 max

*Licensed weight is 4600kg.

4.3. PERMITTED CONTENTS

1. The container is licensed to carry up to 200 kCi (7.40 PBq) Co^{60} or Cs^{137} as Special Form material. Further detail may be found in the container license and from the design owner, REVISS Services (UK) Ltd.
2. The container is also licensed to carry up to 160 kCi (5.92 PBq) Co^{60} as non-Special Form material. This includes sources whose certificate has lapsed or those whose leak tightness is in doubt. Unless you are absolutely sure of the SF status of the contents assume it is not SF. Non-Special Form material is restricted to a minimum pellet size of $1mm^3$.
3. All radioactive material must be encapsulated.
4. All capsules must be supported in a basket conforming to the guidelines below.
5. The flask may not be loaded with anything other than capsules and baskets unless otherwise agreed by the REVISS container Design Authority.

4.4. BASKETS

1. All basket designs shall be approved by the REVISS container Design Authority.
2. The total weight of basket and contents shall not exceed 25kg.
3. Baskets shall provide individual capsule locations in the horizontal plane, i.e. capsules may only be in contact when stacked.
4. Baskets shall not permit capsules to jump out in transport.
5. Baskets shall allow water to drain freely, if intended for pond operations.
6. Baskets shall be manufactured from materials compatible with the contents and the flask.
7. Baskets shall allow the contents to readily dissipate their heat.
8. Baskets shall allow for thermal expansion.
9. Baskets shall be readily handled, lifted, loaded and unloaded.

4.5. CONTAMINATION (NON-FIXED)

Surface	Beta/gamma	Alpha
Internal **	40 Bq /cm²	4 Bq/cm²
External	4 Bq /cm²	0.4 Bq/cm²

** To be agreed between consignor and consignee (suggested maximum) but in any event not more than ten times these levels.

4.6. EQUIPMENT

1. General:
   - Contamination monitors, gamma dose rate monitors and personal dosimeters/film badges.
   - Appropriate lifting equipment (slings, shackles, etc.).

- Sockets and ring spanners: 13, 24, 30, 36 & 46 mm across flats.
- Torque wrench: up to 15 kgf.m.
- Vacuum pump (capability 1 mbar), isolating valves, regulators, pipework, 3/8" BSPP face sealing connector and dry inert gas supply (if required).

2. If pond loaded:
   - Pond handling equipment.
   - 0.5 bar (gauge) regulated dry compressed gas supply.
3. If non-SF contents:
   - ⅛" BSPP face sealing connector.
   - Leak test equipment (see 5.4).

Caution: Over-pressurising a flask could place an operator in danger and/or damage the flask. Gas supplies should be regulated to no more than 0.5 bar gauge. Pressure regulators should have a mechanical stop to prevent accidental over-setting.

5. LOADING

5.1. CAUTION:

1. If you are ever in any doubt how to proceed, consult your safety adviser or REVISS Services (UK) Ltd.
2. Never lift an item any higher than necessary.
3. Always use equipment rated for the duty, properly maintained and in a serviceable condition.
4. Never use the closure lifting eye to lift the flask. Use all four flask lifting eyes.
5. Never assume a flask is empty. Always check dose rates before and during removing the closure.
6. Wear gloves when handling a flask loaded with cobalt. It may be hot enough to burn unprotected skin.

5.2. PREPARATION:

1. Check container has had turnround inspection and that annual inspection is not due within expected delivery duration.
2. Use a dose rate monitor to check flask is not loaded.
3. Remove grilles (figures 2-3), padlocks (2), top shield (figures 4-8) and jacket (figures 9-11) and detach flask from pallet (figures 12-14).

5.3. LOADING:

1. Remove closure padlock, nuts and washers (figures 16-17) and the vent and drain plugs.
2. Wet loading:
   - Lower flask to bottom of pond and remove closure (figures 18-19).

- Load capsules into basket. Unless otherwise agreed they should be distributed as evenly as practicable.
- Load basket into flask and, for non-Special Form contents only, check spring gasket is sitting in its location (figure 21).
- Replace closure.
- Lift flask to surface and replace two opposite closure nuts.
- Lift flask above water, check dose levels are as expected and hold until draining ceases.

3. Dry loading:
   - Place flask in the cell and remove closure.
   - Load capsules into basket. Unless otherwise agreed they should be distributed as evenly as practicable.
   - Load basket into flask and, for non-Special Form contents only, check spring gasket is sitting in its location.
   - Replace closure.
   - Open cell and check dose levels are as expected.
4. Check non-fixed contamination levels on external surfaces do not exceed 4 Bq/cm² (beta-gamma).

5.4. REASSEMBLY:

1. Replace remaining closure nuts and washers and torque down to 15±3 kgf.m.
2. Label flask with contents and date.

- **Wet loaded flasks:**
  - For cobalt loadings under 50kCi and all caesium loadings, unless otherwise agreed:
    - Connect dry, oil-free compressed air supply (or carbon dioxide or any inert gas) to vent port and apply until droplets cease to appear from drain port.
    - Isolate gas, connect vacuum pump to drain port and run for not less than 90 minutes.
    - Switch off pump and allow flask to backfill with gas to 1.1 – 1.2 bar (abs).
    - Disconnect gas, replace vent plug without delay and tighten to engraved torque.
    - Disconnect pump, replace drain plug without delay and tighten to engraved torque.
  - For cobalt loadings over 50kCi, unless otherwise agreed, follow the procedure in the Appendix for vacuum drying and backfilling.
- **Dry loaded flasks:**
  - For cobalt loadings under 50kCi and all caesium loadings, unless otherwise agreed, replace drain and vent plugs and tighten to engraved torque.
  - For cobalt loadings over 50kCi, unless otherwise agreed:

- Connect dry inert gas supply (helium or neon as specified by source Design Authority) to vent port.
- Connect vacuum pump to drain port and run until a vacuum of 1 mbar (abs) is attained.
- Backfill with inert gas to 1.1 – 1.2 bar (abs).
- Disconnect gas supply, replace vent plug without delay and tighten to engraved torque.
- Disconnect pump, replace drain plug without delay and tighten to engraved torque.

3. Replace closure padlock.
4. If contents are Special Form certified, skip to step 6 below.
5. Non-Special Form leaktest:
   - The flask is sealed with three O-rings (on the closure and the vent and drain plugs). Each seal has a secondary, outer O-ring seal and an interseal test point. The maximum allowable helium leakrate at each seal is 5.0×10^{-4} atm.cc/s.
   - If the flask has been helium backfilled it may be readily tested using a helium mass spectrometer connected to each interseal test point in turn.
   - Any equivalent test method may be used, for instance pressure drop, subject to approval by the REVISS container Design Authority.
6. Re-attach flask onto pallet (if removed), replace M24 nuts and washers (12) and torque down to 15±3 kgf.m.
7. Replace jacket, refit M16 shoulder bolts and washers (4) and torque nuts to 6±1 kgf.m.
8. Replace top shield (make sure lifting points align with the two flask fins with shackle locking points), refit M16 shoulder bolts and washers (4) and torque nuts to 6±1 kgf.m.
9. Replace grilles, refit M8 screws and torque to 2±0.5 kgf.m.
10. Fold down top shield shackles (2) and secure with padlocks.
11. Label jacket with flask contents and date and move to storage area to await despatch. Do not oversheet a container loaded with cobalt, or do anything that might restrict ventilation, as it will emit heat.

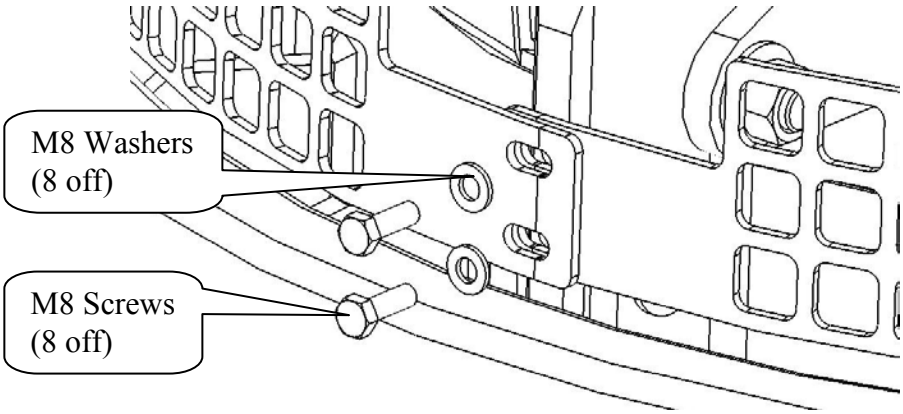

Figure 2: Removal of grilles – remove fasteners

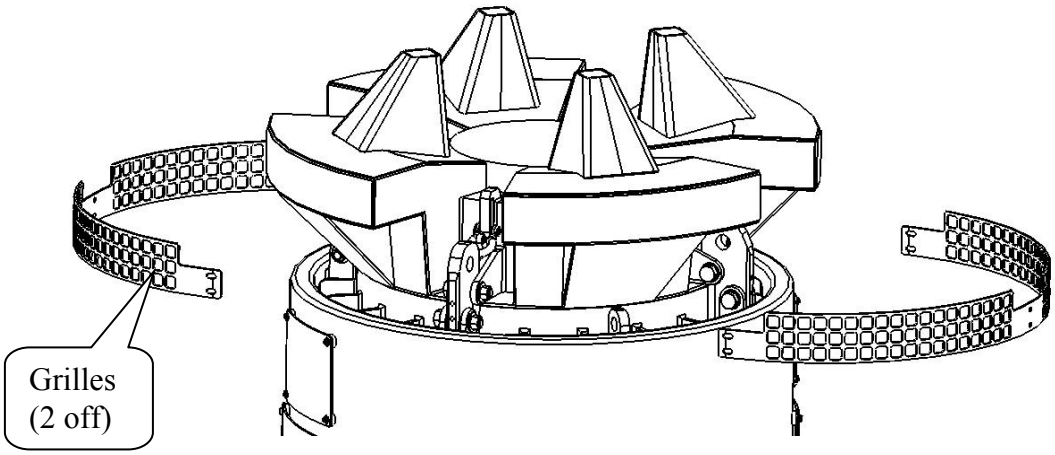

Figure 3: Removal of grilles

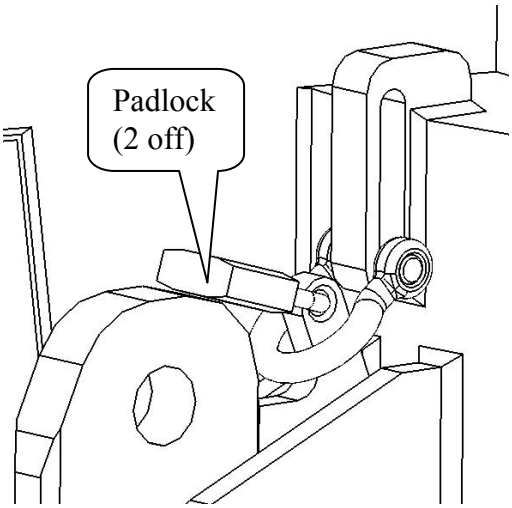

Figure 4: Removal of top shield – remove padlocks

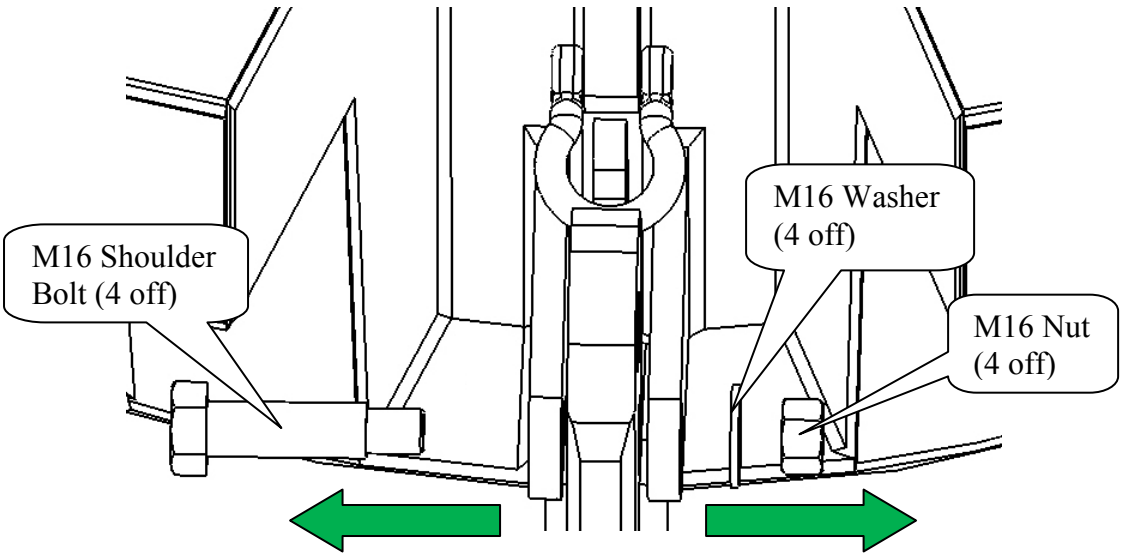

Figure 5: Removal of top shield – remove fasteners

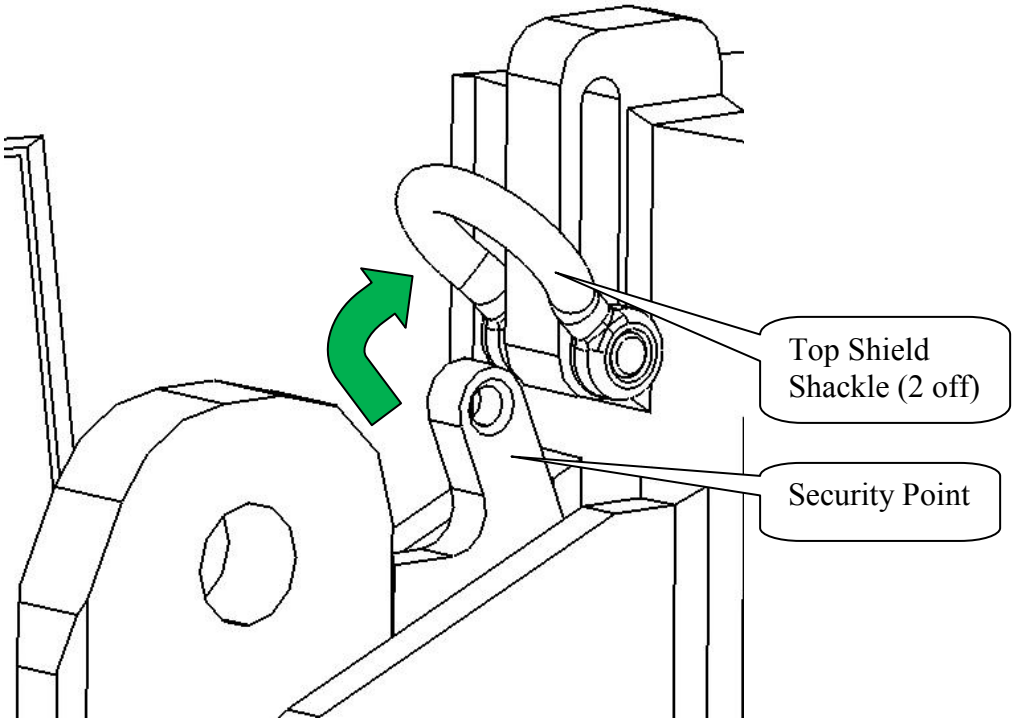

Figure 6: Removal of top shield – unhook shackles

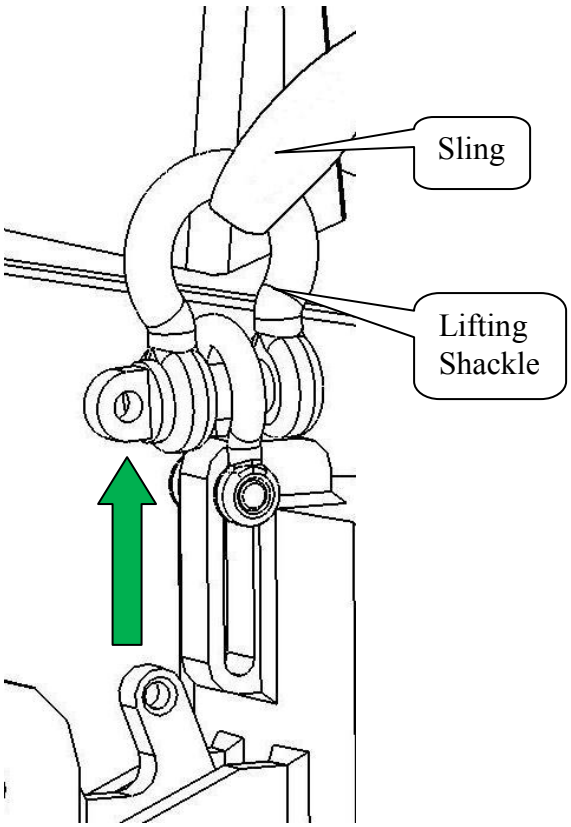

Figure 7: Removal of top shield – attach lifting equipment

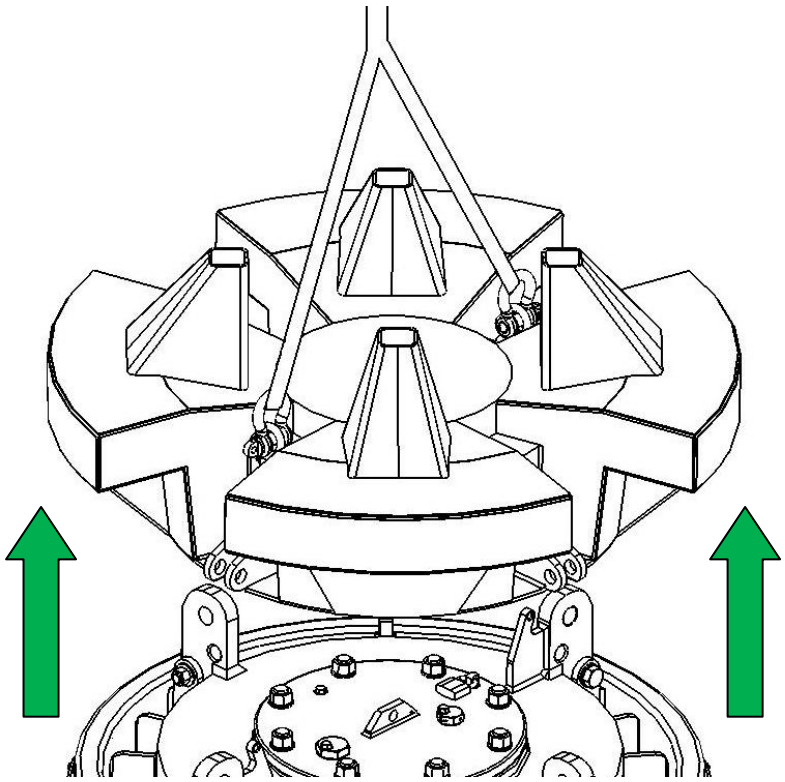

Figure 8: Removal of top shield

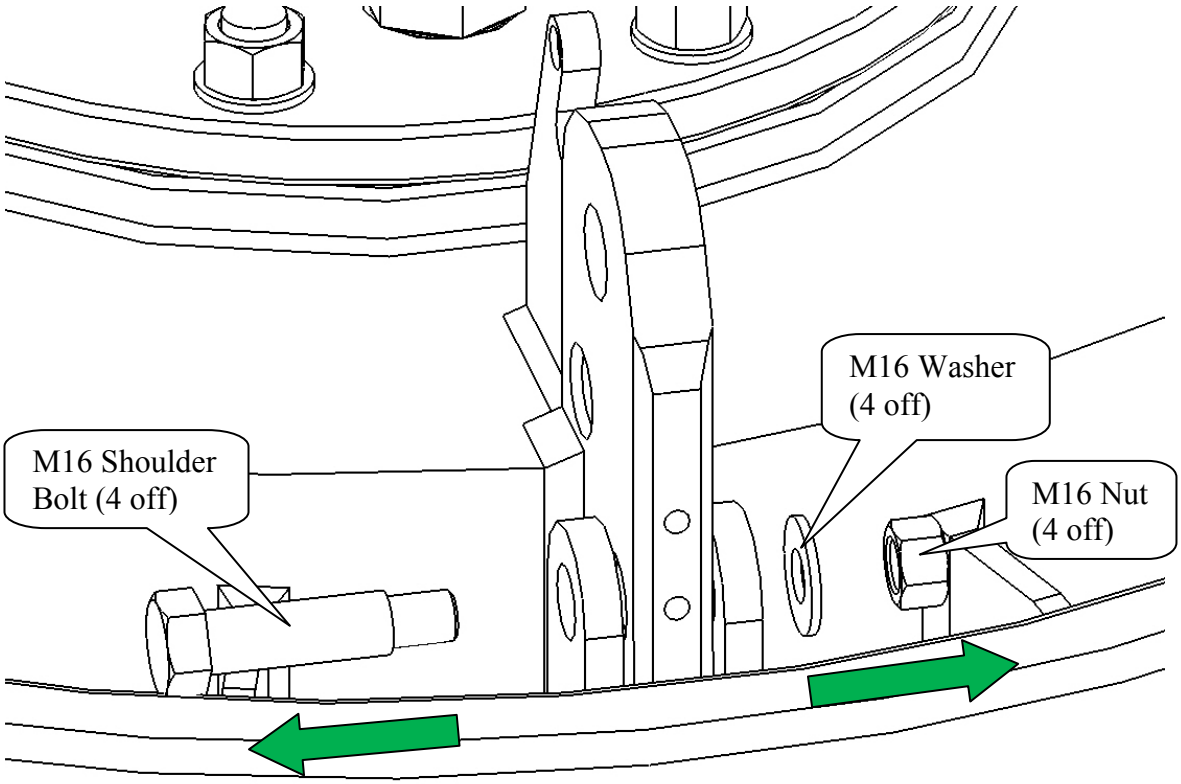

Figure 9: Removal of jacket – remove fasteners

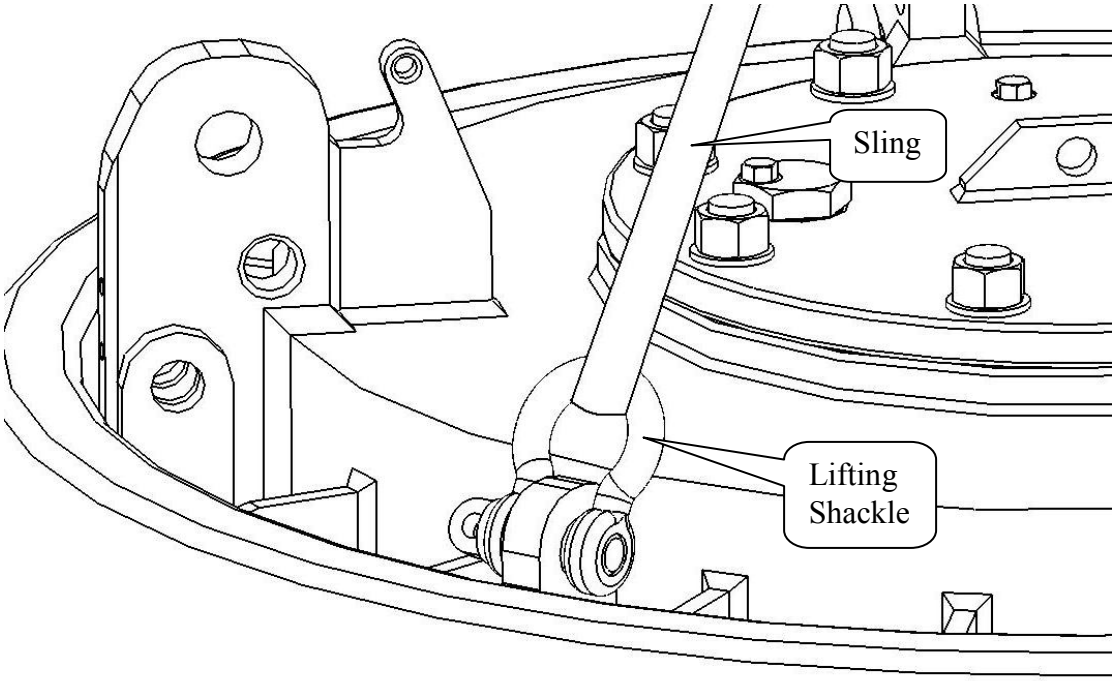

Figure 10: Removal of jacket – attach lifting equipment

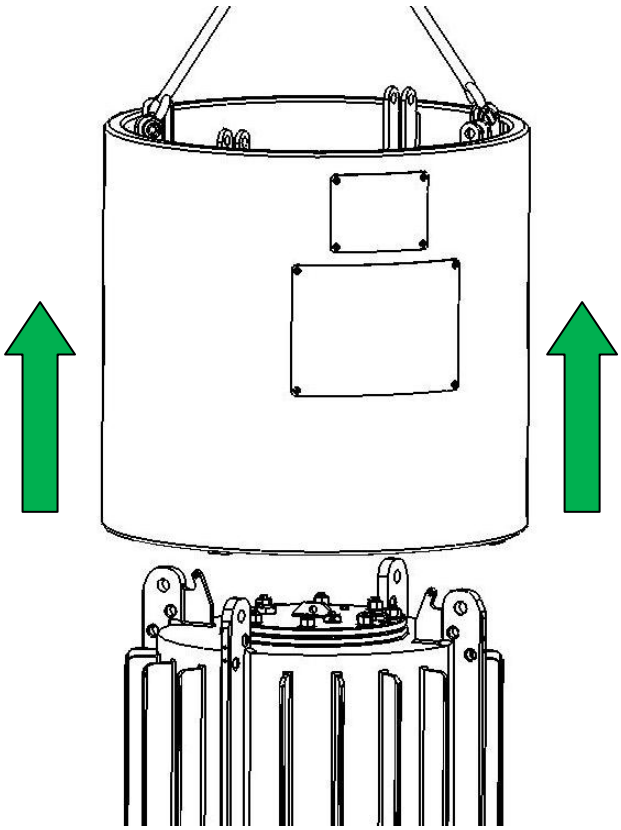

Figure 11: Removal of jacket

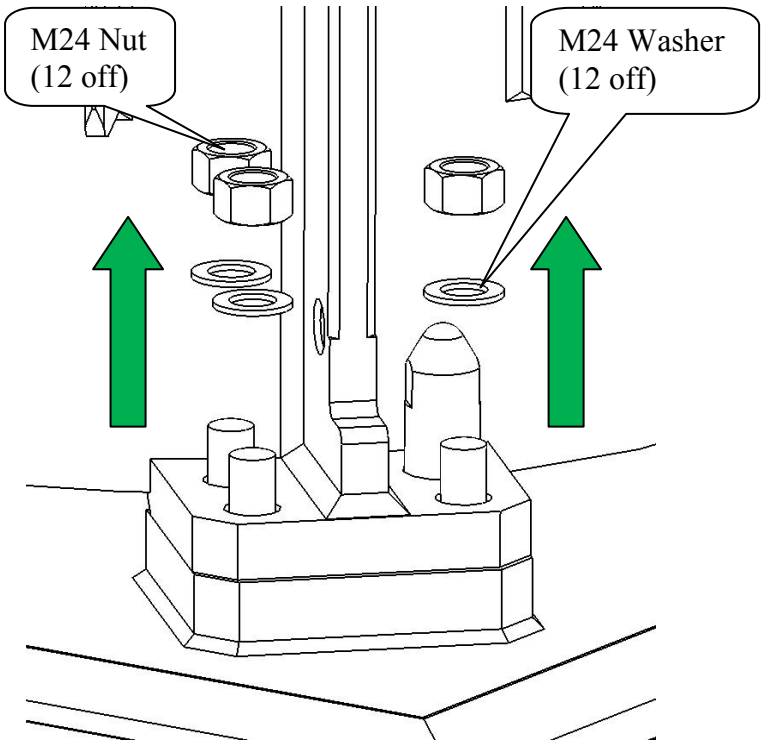

Figure 12: Removal from pallet – remove fasteners

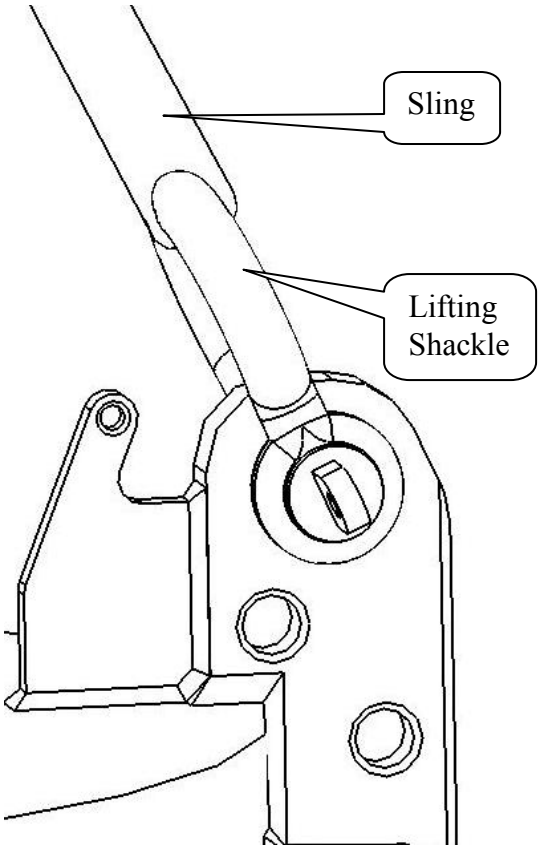

Figure 13: Removal from pallet – attach lifting equipment

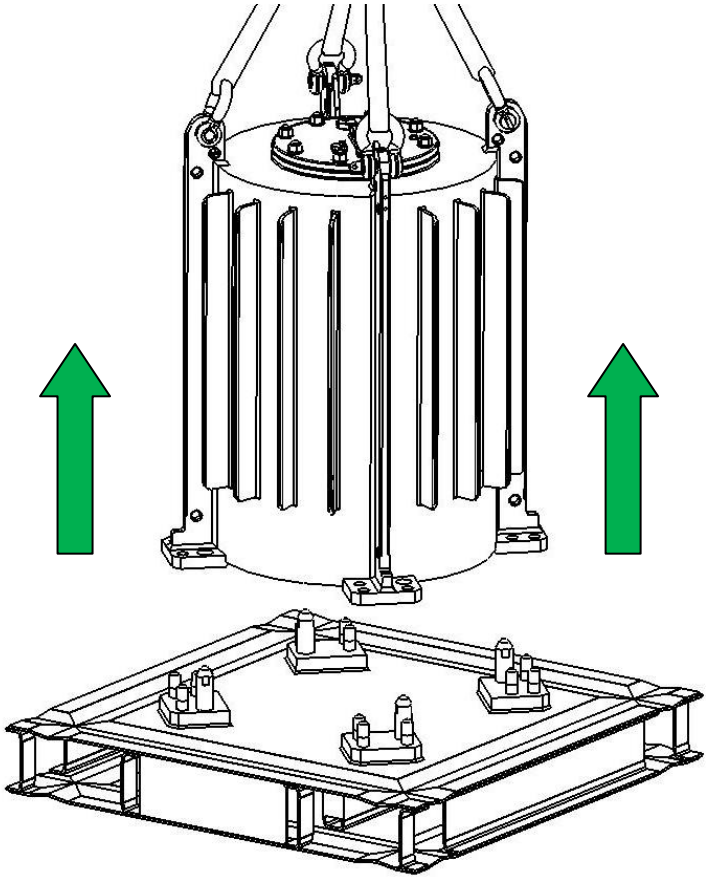

Figure 14: Removal from pallet

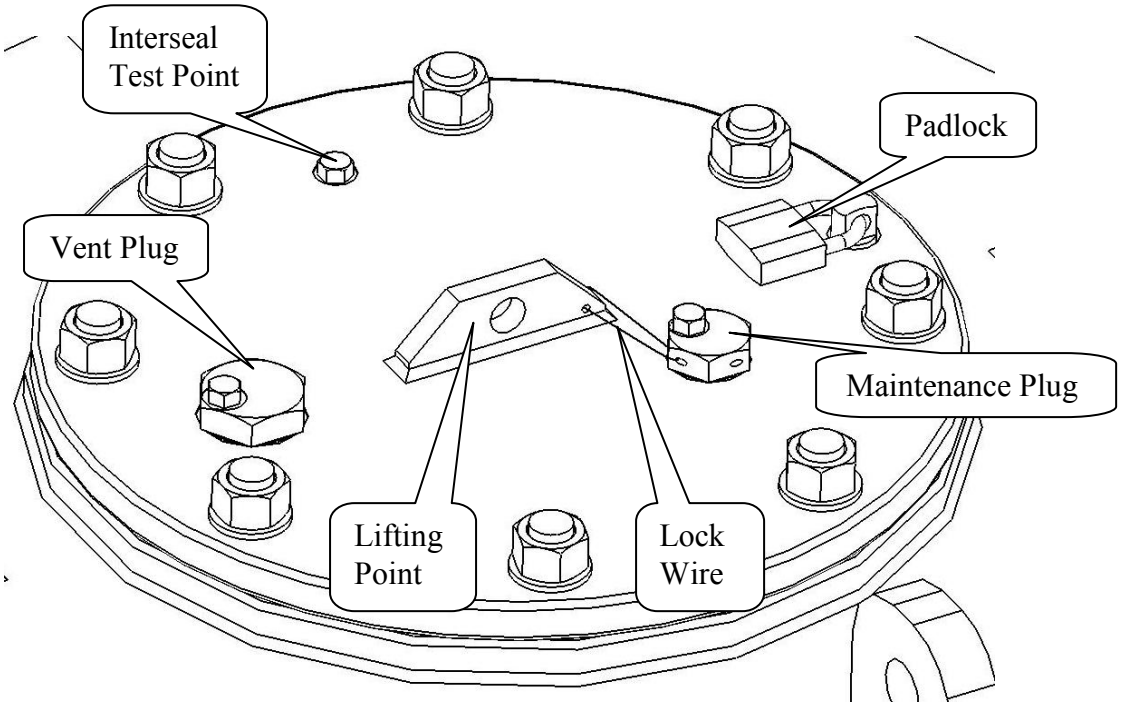

Figure 15: Closure

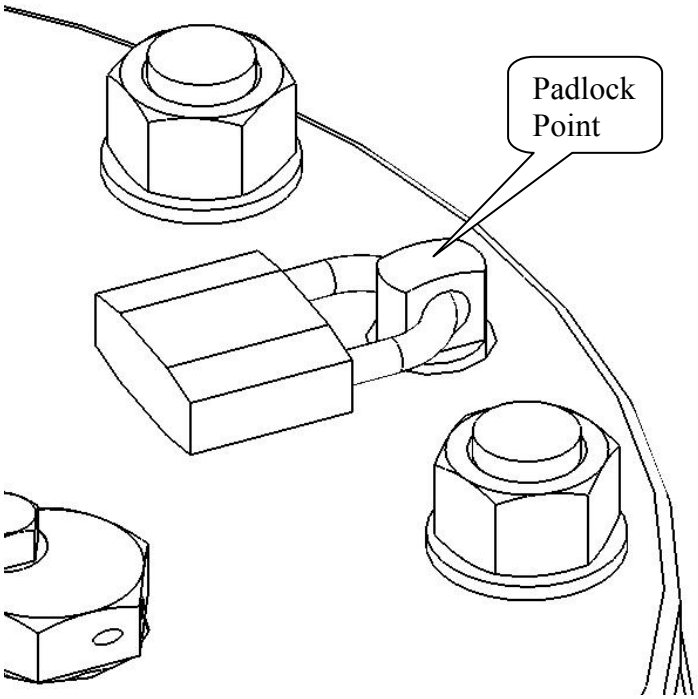

Figure 16: Removal of closure – remove padlock

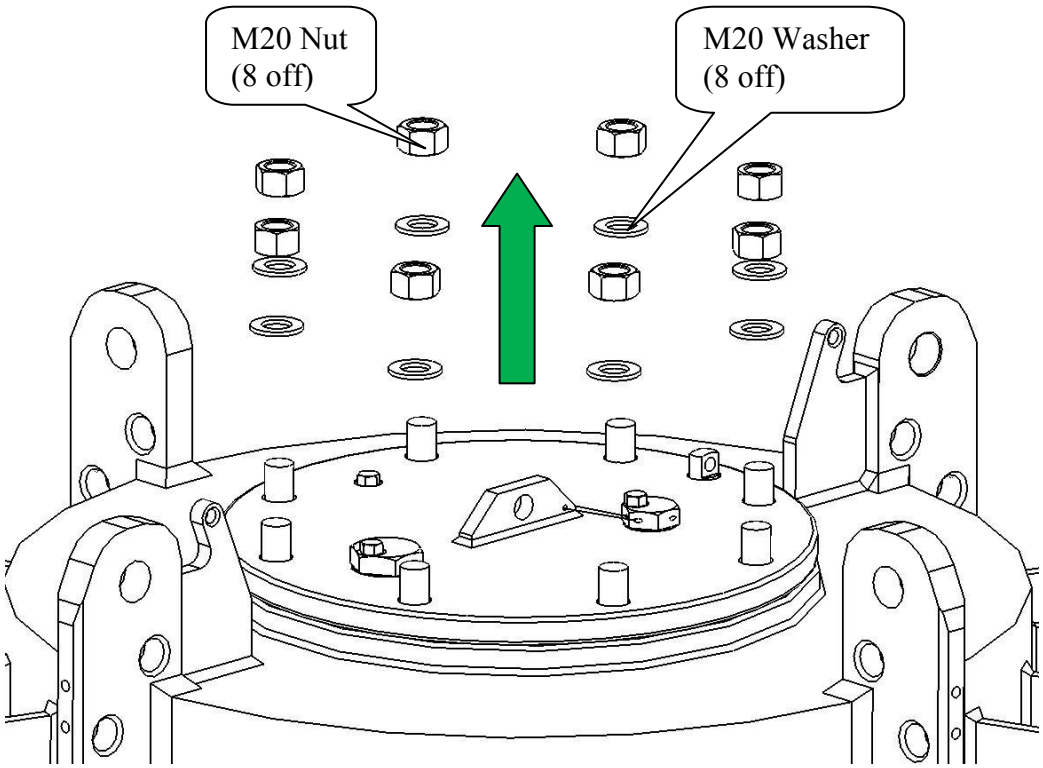

Figure 17: Removal of closure – remove fasteners

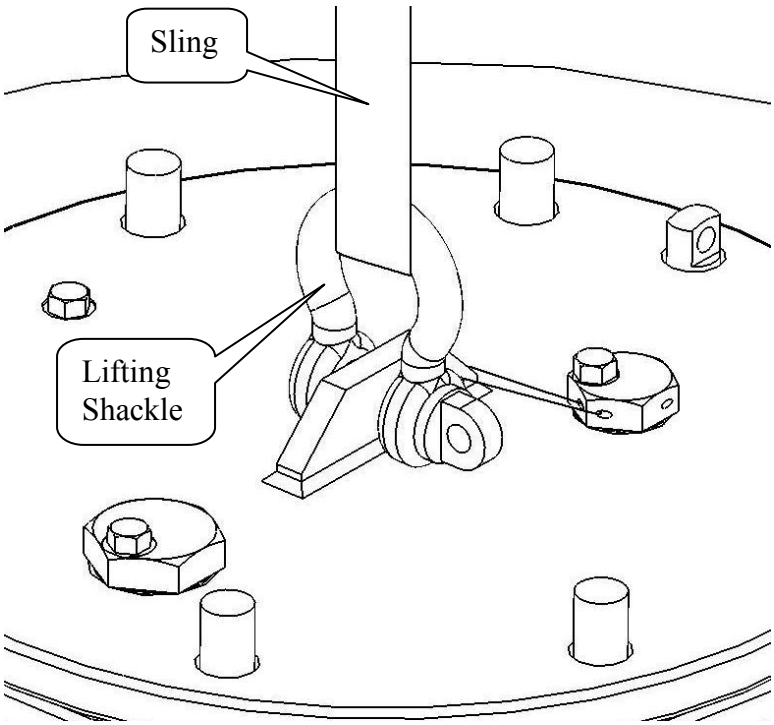

Figure 18: Removal of closure – attach lifting equipment

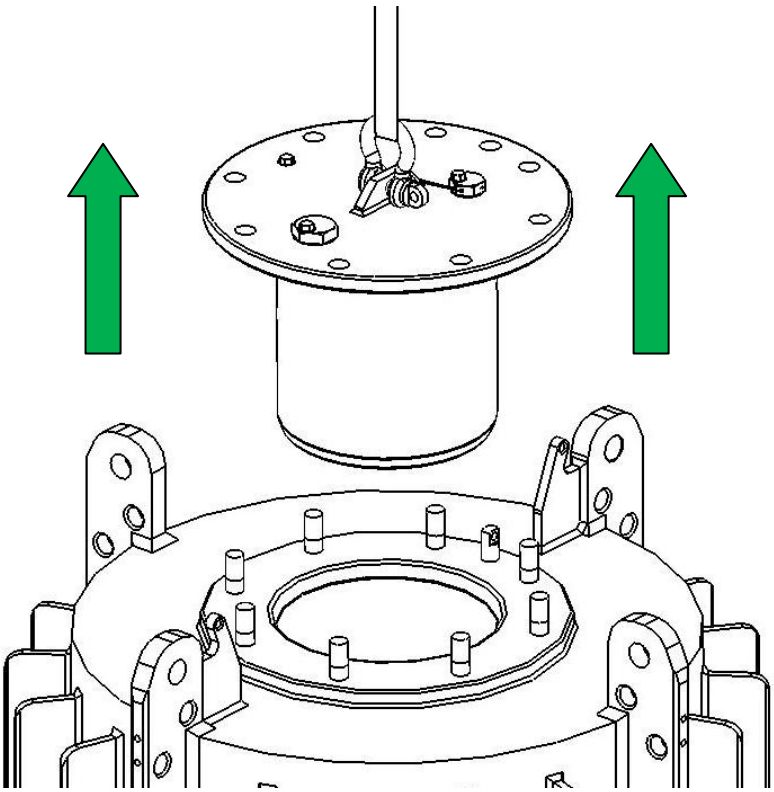

Figure 19: Removal of closure

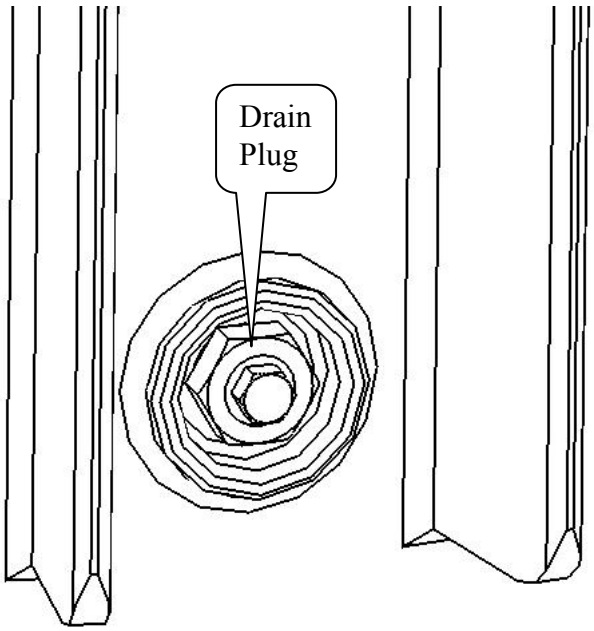

Figure 20: Drain point

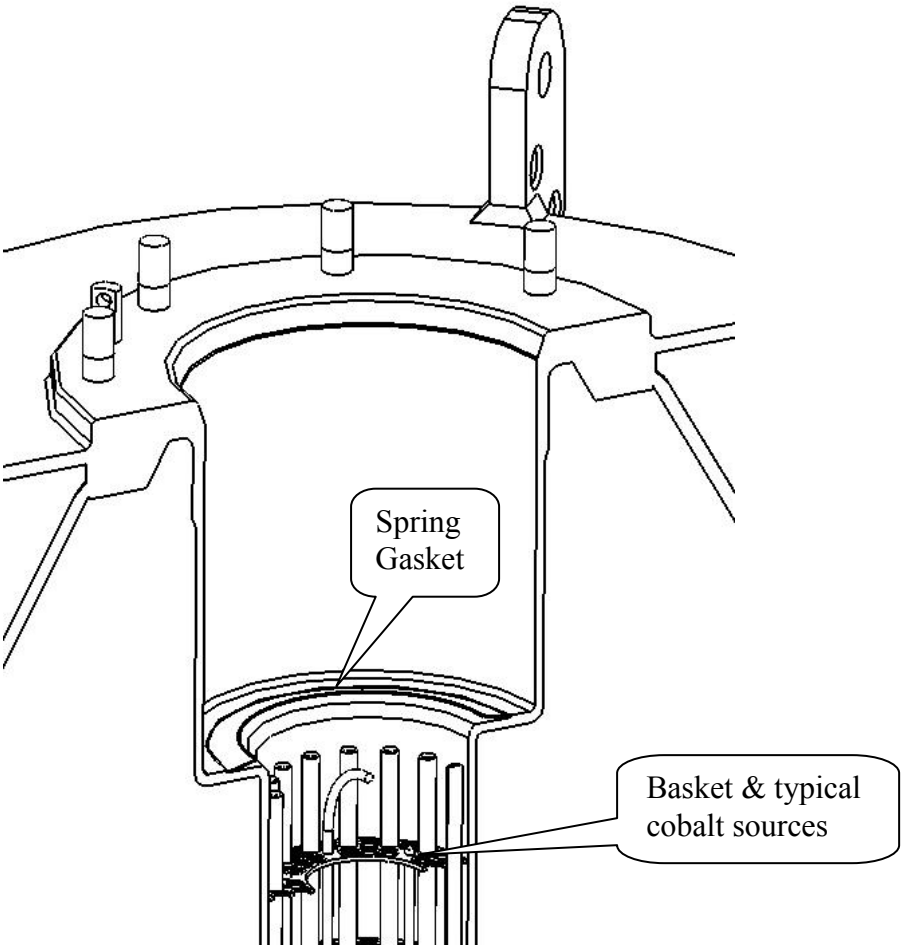

Figure 21: Spring gasket located in register

6. PREPARATION FOR DESPATCH (LOADED)

1. Measure maximum surface dose rate on all surfaces. This may not exceed 2.0 mSv/h.
2. Measure maximum dose rate at one metre from all surfaces and calculate the Transport Index (TI*). This may not exceed 10.
3. Mark the nuclide, activity (see 2.8) and TI on two diamond category labels (see table below) and attach to the shipping plates together with address labels and any other labelling required.
4. Use the appropriate UN hazard number and proper shipping name for the shipment taking into account the national regulations in both the despatching and receiving nations (and any transited during the shipment) in force at the time.
5. Ensure all necessary validations (see 3.3) are in place and notifications (see 3.4) have been made.

Category	Label	Surface Radiation Level (max)		Transport Index* (max)
III	Yellow	2,000 µSv/h	200 mrem/h	10.0
II	Yellow	500 µSv/h	50 mrem/h	1.0
I	White	5 µSv/h	0.5 mrem/h	0.0

* Divide maximum radiation level in µSv/h at 1 m by 10 and round up to one decimal place. TI may only be declared as 0.0, and therefore category White-I, if the maximum radiation level is 0.5µSv/hr or less.

7. CARRIER INFORMATION

Ensure the carrier is aware of the following information.

7.1. TIE-DOWN

The container must be secured to the vehicle or load platform whether it is loaded or empty. The container must be adequately restrained for the mode(s) of transport it will encounter during shipment. If you do not have specific instructions or equipment then, as a general guide for road and sea transport only:

1. Chock the pallet fore and aft and to each side to restrict its freedom of movement to the minimum.
2. Attach 10,000 kg minimum breaking load tie-down members to the four lifting lugs on the flask.
3. Attach to strong points on the vehicle taking care to stay in line with the lug axis. If the attachment points cannot be assured to have the same strength then attach the tie-downs directly onto the chassis.
4. Tension the tie-down members before despatch and check the tension regularly during shipment.

Notes:

- More information can be found in OP 317.
- Stronger tie-down is necessary for rail shipment. Consult REVISS Services (UK) Ltd for information in that situation.

7.2. STOWAGE

Do not oversheet a loaded container or do anything that might restrict ventilation.

7.3. EMERGENCY INSTRUCTIONS

1. Before shipping a loaded container a suitable emergency plan should have been drawn up by the consignor. Specify emergency contact numbers in the shippers declaration and hazardous goods note.
2. In the event of an accident, or other emergency, the plan must be activated. Otherwise notify the appropriate emergency services.

8. RECEIPT AND UNLOADING

8.1. CAUTION:

1. Never lift an item any higher than necessary.
2. Always use equipment rated for the duty, properly maintained and in a serviceable condition.
3. Never use the closure lifting eye to lift the flask. Use all four flask lifting eyes.
4. Wear gloves when handling a flask loaded with cobalt. It may be hot enough to burn unprotected skin.

8.2. ACTIONS ON RECEIPT:

1. If you are ever in any doubt how to proceed, consult your safety adviser or REVISS Services (UK) Ltd.
2. On arrival check dose levels are as expected.
3. Check container is undamaged. If it has been damaged notify consignor.
4. Check documentation and labelling agree with order. If there are any discrepancies notify consignor.
5. Update site radioactive material inventory accordingly.
6. If it is not to be unloaded immediately move container to a suitable store (see 2.7). Do not oversheet a container loaded with cobalt, or do anything that might restrict ventilation, as it will emit heat.

8.3. UNLOADING:

1. Remove padlocks (2) and security seals (if fitted).
2. Remove M8 screws and washers (8), grilles (2) and M16 shoulder bolts (8).
3. Lift off top shield and jacket.
4. If necessary remove M24 nuts and washers (12) from flask feet and detach flask from base.
5. Place all fixings in a clean store.

6. Wet unloading:
    - Remove all but two opposing nuts securing the closure.
    - Remove drain and vent plugs and lower flask into pond until almost completely submerged.
    - When venting has ceased, remove last two nuts and lower flask to unloading position.
    - Remove closure.
    - Unload basket and replace closure.
    - Lift flask above water, check there is no dose and hold until draining ceases.
7. Dry unloading:
    - Move flask into cell
    - Remove closure nuts and washers
    - Vacate cell and remove flask closure.
    - Unload basket and replace closure.
    - Open cell and check dose levels do not exceed background.
8. Check and record non-fixed contamination levels on internal and external surfaces.

8.4 REASSEMBLY:

1. If pond unloaded, thoroughly dry all internal surfaces including the drain tube. This may be readily achieved by blowing compressed gas in the closure vent until droplets cease coming from the drain and then removing the closure and wiping dry all internal surfaces, including the underside of the closure.
2. If spring gasket was fitted ensure it is correctly located in recess, refit closure and M20 nuts and washers (8) and securely tighten.
3. Remove any labels on flask referring to previous contents and attach an “Empty” label.
4. Replace vent and drain plugs and securely tighten.
5. Replace closure padlock.
6. Refit flask to pallet (if removed), fit M24 nuts and washers (12) and securely tighten.
7. Replace jacket, refit shoulder bolts, washers and nuts (4) and securely tighten.
8. Remove any jacket labels referring to previous contents or shipment and attach two “Empty” labels.
9. Replace top shield (ensuring lifting points align with the two shackle locking points on flask), refit shoulder bolts, washers and nuts (4) and securely tighten.
10. Refit grilles, washers and screws (8) and securely tighten.
11. Fold down top shield shackles and secure with two remaining padlocks.
12. Move to storage area to await despatch or loading.

9. PREPARATION FOR DESPATCH (EMPTY)

1. All fasteners must be securely tightened and the assembly safe to handle.
2. Check all category labels, and any other labels referring to previous shipments, have been removed or covered. Note: It is advisable to cover up all information, including the trefoil symbols, on the two identity plates but in any event not the maximum gross weight.
3. If non-fixed contamination levels do not exceed those in para 4.5 describe container as „Radioactive Material, Excepted Package - Empty Packaging" in shipping documentation.
4. Use the appropriate UN hazard number and proper shipping name for the shipment.

10. TURNROUND INSPECTION

10.1. GENERAL

1. This section details the minimum requirements for inspection. It should be used by the operator as the basis for work instructions that may include additional inspection or testing and/or site specific information or instructions.
2. The container owner shall maintain a log of all inspections. All operators/consignors must use a checklist and keep the records on file.
3. The examiner must have had basic training in radiation safety, contamination monitoring, handling heavy items and using vacuum equipment.
    - Inspection is primarily visual.
    - Minor damage and distortion is inevitable in routine handling. The examiner must be trained to distinguish between this and damage that could impair the load bearing capacity or function of the item.
    - They must also be able to assess the condition of fasteners with regard to wear, damage and/or corrosion of the threads and determine their servicablility.
4. Replacement parts may only be obtained from REVISS Services (UK) Ltd or his agent.
5. Repairs may only be carried out by REVISS Services (UK) Ltd or his agent.

10.2. CAUTION:

1. Never lift an item any higher than necessary.
2. Always use equipment rated for the duty, properly maintained and in a serviceable condition.
3. Never use the closure lifting eye to lift the flask. Use all four flask lifting eyes.
4. Never assume a flask is empty. Always check dose rates before and during removing the closure.
5. If there is any doubt as to the acceptability of any feature or aspect of the physical condition of the container, label it as quarantined, or otherwise ensure it cannot be used, and refer to REVISS Services (UK) Ltd.
6. If the flask is to be used to ship non-Special Form material it must be fitted with the spring gasket and should be leak tested. Neither of these requirements apply for shipping Special Form material. If you are not instructed otherwise assume it will be carrying non-Special Form material.

10.3. PROCEDURE

1. The container must be inspected prior to each loading. As a minimum it must be dismantled as far as it would be in normal operation.
2. Ensure a container awaiting, or undergoing, inspection is clearly labelled as such so that it may not inadvertently be put into service.
3. Use a package monitor to check the flask is not loaded. If in any doubt treat as loaded and check for contents in an appropriately shielded facility.
4. Wipe test all accessible surfaces. Maximum permitted levels are detailed in section 4.5. Levels exceeding these may only be accepted with the agreement of your safety officer, otherwise quarantine the container until appropriate actions may be taken.
5. Check all fixings that are undone in normal operation are serviceable and operate freely. Clean, lubricate or replace as necessary.
6. Check all lifting eyes are serviceable. Crack test as necessary.
7. Check all components removed in normal operation are free from any other mechanical damage that might affect their strength, operation or safety. Replace and/or quarantine pending repair as necessary.
8. Check all components removed in normal operation fit together freely. Clean, adjust or replace as necessary.
9. Check closure, drain and vent plug O-rings are clean and stand proud of their grooves and replace as necessary. A light smear of vacuum grease may used to aid insertion of the closure O-rings if they are tight but DO NOT use mineral oil or grease).
10. Check all O-ring sealing faces are clean and free from lubricants or greases.
11. Check all internal surfaces (including underside of closure) are dry.
12. Check drain tube filter at the bottom of the cavity is present and secure.
13. Check air flows freely down drain tube.
14. Check closure padlock point engages freely and is secure. Replace and/or secure as necessary.
15. Check pallet dowels engage freely and are secure. Replace and/or secure as necessary.
16. Check all permanent labels are secure and legible. Secure and repaint as necessary.
17. Remove all temporary labels except “Empty” and “Maintenance Due” labels.

10.4. ADDITIONAL REQUIREMENTS BEFORE SHIPPING NON-SPECIAL FORM MATERIAL:

1. Leaktesting (advisory only). This requires a helium supply and mass spectrometer, though any equivalent test method may be used, for instance pressure drop, subject to approval by the REVISS container Design Authority:
   - The maximum allowable leakrate at each seal is 5.0×10^{-4} atm.cc/s.
   - Assemble the closure to the flask and fill it with helium, either by flushing through or vacuum backfilling.
   - Connect the mass spectrometer to the closure interseal test point and measure the leakrate.
   - Repeat for the vent and drain plugs.

2. Spring gasket. Check gasket is clean and free from distortion and is correctly located in its register at the top of the cavity.

10.5. COMPLETION

If the inspection is satisfactory, reassemble and label as having passed turnround inspection (noting whether it is for Special Form or non-Special Form contents) and file the inspection record in the container maintenance log.

11. SCHEDULED INSPECTION AND MAINTENANCE

11.1. GENERAL

This section details maintenance actions that should be conducted annually. Note:

1. The twelve month interval may be extended by up to 3 months at the discretion of the design owner, REVISS Services (UK) Ltd.
2. It is in addition to turnround inspection.

11.2. INSPECTION

1. Top shield and jacket: Check paintwork is adequately preventing corrosion. Repair/touch up as necessary.
2. Pallet: Check galvanising is adequately preventing corrosion. Repair/touch up as necessary.
3. Flask:
   - Check all components are free from corrosion. Clean, secure and/or replace as necessary.
   - Replace the closure, vent and drain plug O-ring seals if they have not been replaced since the previous scheduled maintenance. A light smear of vacuum grease may used to aid insertion of the closure O-rings if they are tight but DO NOT use mineral oil or grease.
   - Leaktest the flask as detailed below.

11.3. LEAK TESTING

1. Notes
   - If a FAIL is recorded mark container as “Quarantined” and contact design owner for advice.
   - Any equivalent test method may be used subject to approval by the design owner.
2. Equipment
   - Helium mass spectrometer and helium supply.
   - Vacuum pump (capability 1 mbar).
   - Isolating valves, regulators, pipework, 1/8” & 3/8” BSPP face sealing connectors.
3. Testing Containment Boundary

- Cut the lock wire on the two maintenance plugs opposite the drain point (figure 22) and unscrew the top plug.
- Check the sealing faces are clean and dry and replace the O-rings.
- Connect vacuum pump and helium supply to test point.
- Run pump until a vacuum of 1 mbar or better is attained.
- Isolate pump and release helium into flask until pressure is just above atmospheric.
- Disconnect from flask, refit plug without delay and torque to engraved value.
- Connect mass spectrometer to interseal test point on plug and measure leak rate. The maximum allowable is 2.6×10^{-7} atm.cc/s.
- If a satisfactory result is obtained repeat entire process above for the lower plug and then for the closure maintenance plug (figure 23).
- With closure (and vent plug) in place connect mass spectrometer to drain point and measure leak rate. The maximum allowable is 1×10^{-5} atm.cc/s.
- If a satisfactory result is obtained securely rewire the plugs.

4. Testing closure, vent and drain plug seals (if not tested at turnround inspection)
   - With closure in place connect vacuum pump and helium supply to drain point.
   - Run pump until a vacuum of 1mbar or better is attained.
   - Isolate pump and release helium into flask until pressure is just above atmospheric.
   - Disconnect equipment and replace drain plug.
   - Connect mass spectrometer to interseal test point on closure and measure leak rate. The maximum allowable is 1×10^{-5} atm.cc/s.
   - Repeat last step for interseal test points on drain plug and vent plug.

11.4. COMPLETION

1. On satisfactory completion of the inspection, fit new turnround inspection and "Maintenance Due" labels to the flask and jacket, dating them day, month and year twelve months ahead and reassemble.
2. File the inspection record in the container maintenance log.

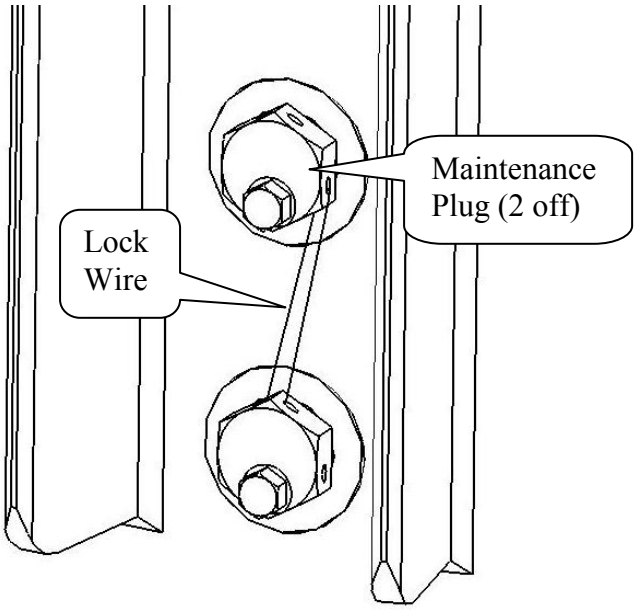

Figure 22: Flask leak-test points

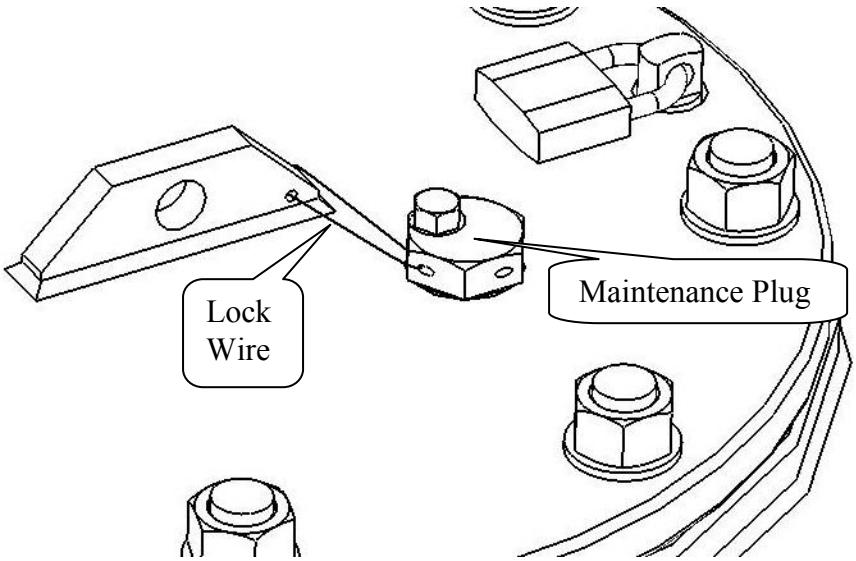

Figure 23: Closure leak-test point

APPENDIX

VACUUM DRYING AND BACKFILLING PROCEDURE

FOR FLASKS WET LOADED WITH COBALT

Notes:

1. This procedure should be applied to all cobalt capsules with the exception of those being shipped for recycling or disposal. If in doubt refer to the Design Authority for the contents. When this is impracticable for non-REVISS sources refer to the REVISS source Design Authority instead.
2. The source Design Authority is also responsible for specifying the inert gas for backfilling.

Equipment:

1. 3/8" BSPP face sealing connectors for vent and drain ports.
2. Vacuum gauge (min range 1 to 1200 mbar (abs), minimum sensitivity 5 mbar)
3. Vacuum pump (capable of attaining 10 mbar (abs)).
4. Water trap (if necessary).
5. Dry, oil free compressed air (or other non-flammable gas) supply with pressure regulator.
6. Dry, oil free inert gas supply (see 2 above) with pressure regulator.
7. Sundry pipes, valves, connectors and fittings as necessary.

Procedure:

1. Cavity drying should be commenced as soon as practicable after draining and all safety checks have been performed. Avoid undue delay.
2. If any unusual or unexpected observations are made, or if you are in any doubt at any time, STOP and consult your supervisor.
3. Lift flask above water and check it is draining freely.
4. When drainage has ceased, apply compressed gas to vent port until droplets cease appearing from drain port.
5. Move the flask to a suitable position for vacuum drying and back-filling.
6. Connect vacuum pump, water trap, isolation valve and vacuum gauge to the drain port as shown in the diagram below.
7. Connect inert gas supply, pressure regulator and metering valve to the vent port.
8. Close the metering valve and set gas regulator to between 0.2 and 0.3 bar (gauge).
9. Open isolation valve and start pump.
10. Adjust metering valve to maintain the vacuum between 20 and 50 mbar (abs).
11. Monitor for a minimum of 90 minutes, adjusting metering valve as necessary.
12. Stop pump and close isolation valve.
13. When gauge reads 1.2 bar (abs) disconnect pump from the flask, replace drain plug and tighten to engraved torque.
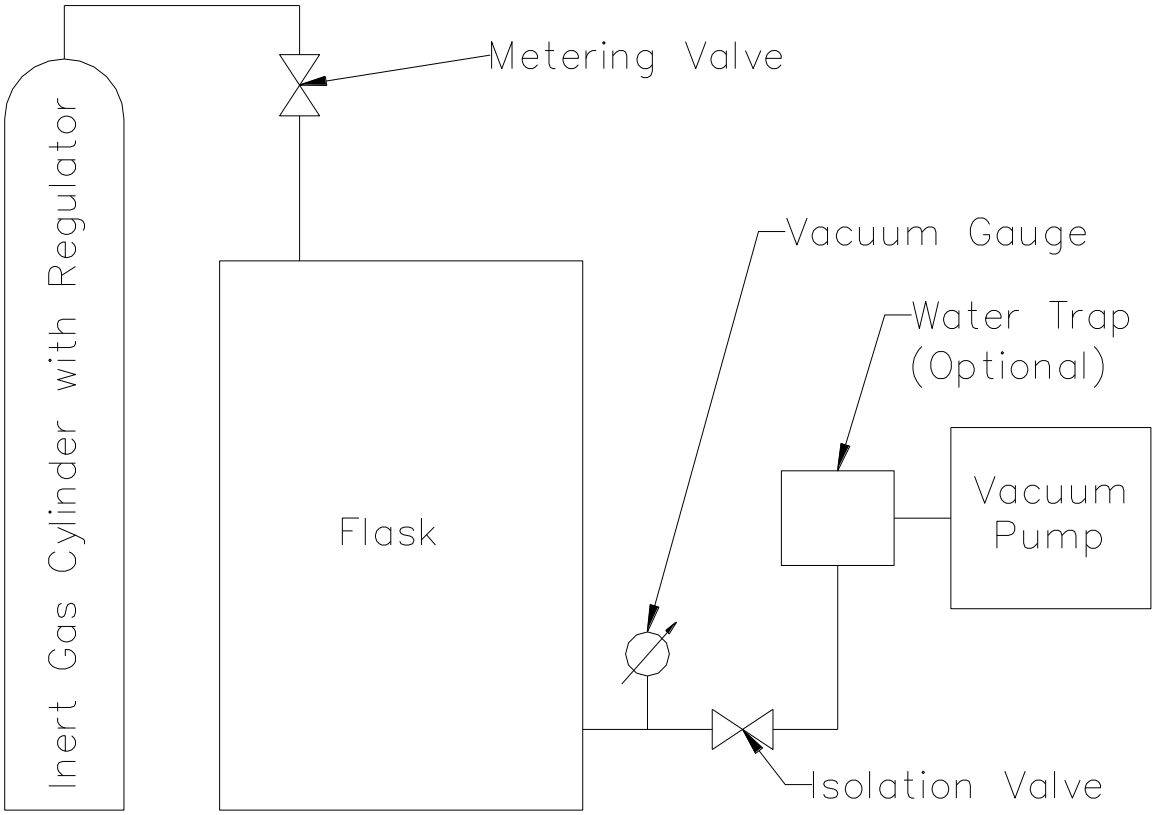
14. Close metering valve.
15. Disconnect inert gas supply, replace vent plug and tighten to engraved torque.
16. Record details as necessary.