WOLF CREEK
NUCLEAR OPERATING CORPORATION

November 30, 2011

Stephen E. Hedges
Site Vice President

WO 11-0086

U. S. Nuclear Regulatory Commission
ATTN: Document Control Desk
Washington, DC 20555

Subject: Docket No. 50-482: Application To Revise Technical Specification (TS) 3.8.1, "AC Sources - Operating"

Gentlemen:

Pursuant to 10 CFR 50.90, "Application for amendment of license, construction permit, or early site permit," Wolf Creek Nuclear Operating Corporation (WCNOC) hereby requests an amendment to Renewed Facility Operating License No. NPF-42 for the Wolf Creek Generating Station (WCGS). The proposed amendment revises Technical Specifications (TS) 3.8.1, "AC Sources - Operating," Surveillance Requirements (SR) related to Diesel Generator (DG) test loads, voltage, and frequency in SR 3.8.1.2, SR 3.8.1.3, SR 3.8.1.7, SR 3.8.1.10, SR 3.8.1.11, SR 3.8.1.12, SR 3.8.1.14, SR 3.8.1.15, SR 3.8.1.19, and SR 3.8.1.20. The proposed changes to the load values corrects nonconservative values in the TSs. Currently, administrative controls have been established in accordance with the guidance of NRC Administrative Letter 98-10, "Dispositioning of Technical Specifications That Are Insufficient to Assure Plant Safety."

Attachments I through IV provide the Evaluation, Markup of TSs, Retyped TS pages, and proposed TS Bases changes, respectively, in support of this amendment request. Attachment IV is provided for information only. Final TS Bases changes will be implemented pursuant to TS 5.5.14, "Technical Specification (TS) Bases Control Program," at the time the amendment is implemented.

It has been determined that this amendment application does not involve a significant hazard consideration as determined per 10 CFR 50.92, "Issuance of amendment." Pursuant to 10 CFR 51.22, "Criterion for categorical exclusion; identification of licensing and regulatory actions eligible or otherwise not requiring environmental review," Section (b), no environmental impact statement or environmental assessment needs to be prepared in connection with the issuance of this amendment.

A001
NRR

The Plant Safety Review Committee reviewed this amendment application. In accordance with 10 CFR 50.91, "Notice for public comment; State consultation," a copy of this amendment application, with attachments, is being provided to the designated Kansas State official.

WCNOC requests approval of the proposed amendment by November 29, 2012. It is anticipated that the license amendment, as approved, will be effective upon issuance and will be implemented within 90 days from the date of issuance. This implementation period will provide adequate time for the affected station documents to be revised using the appropriate change control mechanisms. Since the proposed changes to the SRs result in modified surveillance testing requirement acceptance criteria, the first required performance will come due by the end of the first surveillance interval that begins or is in effect on the date of implementation of this amendment. This is similar to the License Condition applied to new and revised Surveillance Requirements added by License Amendment No. 123 for the Improved Technical Specification conversion.

This letter contains no commitments. If you have any questions concerning this matter, please contact me at (620) 364-4190, or Mr. Gautam Sen at (620) 364-4175.

Sincerely,

Stephen E. Hedges

SEH/rlt

Attachments: I Evaluation
II Proposed Technical Specification Changes (Mark-up)
III Revised Technical Specification Pages
IV Proposed TS Bases Changes (for information only)

cc: E. E. Collins (NRC), w/a
T. A. Conley (KDHE), w/a
J. R. Hall (NRC), w/a
G. B. Miller (NRC), w/a
Senior Resident Inspector (NRC), w/a

STATE OF KANSAS)
) SS
COUNTY OF COFFEY)

Stephen E. Hedges, of lawful age, being first duly sworn upon oath says that he is Site Vice President of Wolf Creek Nuclear Operating Corporation; that he has read the foregoing document and knows the contents thereof; that he has executed the same for and on behalf of said Corporation with full power and authority to do so; and that the facts therein stated are true and correct to the best of his knowledge, information and belief.

By_____
Stephen E. Hedges
Site Vice President

SUBSCRIBED and sworn to before me this 30th day of November, 2011.

RHONDA L. TIEMEYER
MY COMMISSION EXPIRES
January 11, 2014

Rhonda L. Tiemeyer
Notary Public

Expiration Date January 11, 2014

EVALUATION

1.0 SUMMARY DESCRIPTION

2.0 DETAILED DESCRIPTION

3.0 TECHNICAL EVALUATION

4.0 REGULATORY EVALUATION

- 4.1 Applicable Regulatory Requirements/Criteria
- 4.2 Significant Hazards Consideration
- 4.3 Conclusions

5.0 ENVIRONMENTAL CONSIDERATION

6.0 REFERENCES

1.0 SUMMARY DESCRIPTION

The proposed amendment revises Technical Specifications (TS) 3.8.1, "AC Sources - Operating," Surveillance Requirements (SR) related to Diesel Generator (DG) test loads, voltage, and frequency in SR 3.8.1.2, SR 3.8.1.3, SR 3.8.1.7, SR 3.8.1.10, SR 3.8.1.11, SR 3.8.1.12, SR 3.8.1.14, SR 3.8.1.15, SR 3.8.1.19, and SR 3.8.1.20. The proposed changes to the load values corrects nonconservative values in the TSs. Currently, administrative controls have been established in accordance with the guidance of NRC Administrative Letter 98-10, "Dispositioning of Technical Specifications That Are Insufficient to Assure Plant Safety."

2.0 DETAILED DESCRIPTION

- **Proposed TS Changes**

SR 3.8.1.2 – Start Test

This SR is being revised to specify a minimum steady state voltage of ≥ 3950 V and a frequency range of ≥ 59.4 Hz and ≤ 60.6 Hz. The current minimum steady state voltage is ≥ 3740 V and a current frequency range of ≥ 58.8 Hz and ≤ 61.2 Hz.

SR 3.8.1.3 – Load Run Test

This SR is being revised to specify a load range of ≥ 5650 kW and ≤ 6201 kW. The current load range is ≥ 5580 kW and ≤ 6201 kW.

SR 3.8.1.7 – Fast-Start Test

This SR is being revised to specify a minimum voltage of ≥ 3950 V and a minimum frequency of ≥ 59.4. The minimum steady state voltage is revised to specify a value of ≥ 3950 V and a steady state frequency range of ≥ 59.4 Hz and ≤ 60.6 Hz. The current minimum voltage and minimum steady state voltage is ≥ 3740 V and a current minimum frequency of ≥ 58.8 Hz and steady state frequency range of ≥ 58.8 Hz and ≤ 61.2 Hz.

SR 3.8.1.10 – Full Load Rejection Test

This SR is being revised to specify a load range of ≥ 5650 kW and ≤ 6201 kW. The current load range is ≥ 5580 kW and ≤ 6201 kW.

SR 3.8.1.11 – Loss-of-Offsite Power (LOOP) Test

This SR is being revised to specify a minimum steady state voltage of ≥ 3950 V and a steady state frequency range of ≥ 59.4 Hz and ≤ 60.6 Hz. The current minimum steady state voltage is ≥ 3740 V and a steady state frequency of ≥ 58.8 Hz and ≤ 61.2 Hz.

SR 3.8.1.12 – Safety Injection Actuation Signal (SIAS) Test

This SR is being revised to specify a minimum voltage of ≥ 3950 V and a minimum frequency of ≥ 59.4. The minimum steady state voltage is revised to specify a value of ≥ 3950 V and a steady state frequency range of ≥ 59.4 Hz and ≤ 60.6 Hz. The current minimum voltage and minimum steady state voltage is ≥ 3740 V and a current minimum frequency of ≥ 58.8 Hz and steady state frequency range of ≥ 58.8 Hz and ≤ 61.2 Hz.

SR 3.8.1.14 – Endurance and Margin Test

Note 2 is being deleted. The deletion of Note 2 results in changing the "Notes" heading to "Note" and removing the number (1.) from Note 1. The load range for the 2 hours portion of the SR is being revised to specify a load range of ≥ 6300 kW and ≤ 6821 kW. The current load range is ≥ 6600 kW and ≤ 6821 kW. The load range for the remaining hours of SR is being revised to ≥ 5650 kW and ≤ 6201 kW. The current load range is ≥ 5580 kW and ≤ 6201 kW.

SR 3.8.1.15 – Hot Restart Test

Note 1 is being revised to specify a load range of ≥ 5650 kW and ≤ 6201 kW. The current load range is ≥ 5580 kW and ≤ 6201 kW. Additionally, this SR is being revised to specify a minimum voltage of ≥ 3950 V and a minimum frequency of ≥ 59.4. The minimum steady state voltage is revised to specify a value of ≥ 3950 V and a steady state frequency range of ≥ 59.4 Hz and ≤ 60.6 Hz. The current minimum voltage and minimum steady state voltage is ≥ 3740 V and a current minimum frequency of ≥ 58.8 Hz and steady state frequency range of ≥ 58.8 Hz and ≤ 61.2 Hz.

SR 3.8.1.19 – Combined SIAS and LOOP Tests

This SR is revised to specify a minimum steady state voltage of ≥ 3950 V and a steady state frequency range of ≥ 59.4 Hz and ≤ 60.6 Hz. The current minimum steady state voltage is ≥ 3740 V and a current steady state frequency range of ≥ 58.8 Hz and ≤ 61.2 Hz.

SR 3.8.1.20 – Redundant Unit

This SR is being revised to specify a minimum voltage of ≥ 3950 V and a minimum frequency of ≥ 59.4. The minimum steady state voltage is revised to specify a value of ≥ 3950 V and a steady state frequency range of ≥ 59.4 Hz and ≤ 60.6 Hz. The current minimum voltage and minimum steady state voltage is ≥ 3740 V and a current minimum frequency of ≥ 58.8 Hz and steady state frequency range of ≥ 58.8 Hz and ≤ 61.2 Hz.

The changes to the affected TS Bases pages will be incorporated in accordance with TS 5.5.14, "Technical Specifications (TS) Bases Control Program."

- **Reason for Proposed Amendment**

A review of Regulatory Guide 1.9, Revision 3, "Selection, Design, Qualification, and Testing of Emergency Diesel Generator Units Used as Class 1E Onsite Electric Power Systems at Nuclear Power Plants," Regulatory Position C.1.5 identified that the design should include

provision so that testing of the units will simulate the parameters of operation that would be expected if actual demand were to be placed on the system. This position is further clarified in a July 11, 2007 Nuclear Regulatory Commission (NRC) memorandum (Reference 1) that the test performed should most closely simulate the actual stresses on the machine to gain confidence in its readiness as stated in Regulatory Position C.1.5 of Revision 3 of Regulatory Guide 1.9. The conclusion of Reference 1 infers that the TS Surveillance Requirements should envelop the actual power demand requirements for the diesel generator (DG) during design-basis conditions.

WCNOC Drawing E-11005, Revision 35, "List of Loads Supplied by Emergency Diesel Generator," (Reference 2) indicated a maximum accident loading of 6310.2 kW under a "medium time" condition (defined as 30 minutes to 7 days) and a maximum accident loading of 5720 kW under a "long term" condition (defined as continuous operation greater than 7 days) for the "B" DG with frequency at the upper end of the band (61.2 Hz). The drawing also indicates the total auto-connected loading for the "short term" condition (defined as 0 to 30 minutes) is 4682.4 kW and for the long term condition is 4208.7 kW. A subsequent revision (Rev. 36) to E-11005 resulted in a maximum accident loading of 6315.7 kW under a "medium time" condition and a maximum accident loading of 5725.5 kW under a "long term" condition (defined as continuous operation greater than 7 days) for the "B" DG with frequency at the upper end of the band (61.2 Hz).

Note 2 to SR 3.8.1.14 specifies that the DG may be loaded to ≥ 5580 kW and ≤ 6201 kW for the entire test period, if auto-connected loads are less than 6201 kW. This exception to Regulatory Guide 1.9, Revision 3 was approved in License Amendment No. 101 (Reference 3). Note 2 to SR 3.8.1.14 indicates demonstrating full-load carrying capability for 2 hours at a load ≥ 6600 kW and ≤ 6821 kW is not required. SRs 3.8.1.3, 3.8.1.10, 3.8.1.14, and 3.8.1.15 specify a test load range of ≥ 5580 kW and ≤ 6201 kW. Therefore, these Surveillances do not envelop the actual power demand requirements for the DG during design-basis conditions per the guidance of Regulatory Position C.1.5 of Revision 3 of Regulatory Guide 1.9. This is further discussed in Section 3.0 below.

Upon determining that a nonconservative TS value existed on June 23, 2011, administrative controls were established such that during the performance of SR 3.8.1.3 (31 day Frequency), test procedures specify a test load range of ≥ 5800 kW and ≤ 6201 kW. Additionally, a 2-hour test at a load range of ≥ 6350 kW and ≤ 6500 kW was performed on the "A" DG on September 4, 2011 and on the "B" DG on September 14, 2011. Both DGs performed satisfactorily during this test.

3.0 TECHNICAL EVALUATION

The design function of the DGs is to provide AC power to required safety systems within a specified time period-during any loss of offsite power event. The limiting design basis accident assumed is the Loss of Coolant Accident (LOCA) concurrent with a loss of offsite power. During a loss of offsite power event the DG starts and its output breaker closes on the de-energized bus to supply power. The DG, once loaded, will maintain steady state voltage and frequency.

- **System Description**

Offsite power is supplied to the unit switchyard from the transmission network by three transmission lines. From the switchyard, two electrically and physically separated circuits provide AC power, through the engineered safety features (ESF) transformers, to the 4.16 kV ESF buses.

The onsite Class 1E AC Distribution System is divided into redundant load groups (trains) so that the loss of any one group does not prevent the minimum safety functions from being performed. Each train has connections to its preferred offsite power source and a single DG.

The standby power supply for each safety related load group consists of one DG complete with its accessories and fuel storage and transfer systems. It is capable of supplying essential loads necessary to reliably and safely shut down and isolate the reactor. Each DG is rated at 6,201 kW for continuous operation. Additional ratings are 6,635 kW for 2,000 hours, 6,821 kW for 7 days, and 7,441 kW for 30 minutes. The DG 2-hour rating is equal to the 7-day rating. Each DG is connected exclusively to a single 4.16-kV engineered safety feature bus for one load group. The load groups are redundant and have similar safety related equipment. Each load group is adequate to satisfy minimum ESF demand caused by a loss of coolant accident (LOCA) and/or loss of preferred power supply. The DGs are electrically isolated from each other. Physical separation for fire and missile protection is provided between the DGs, since they are housed in separate rooms of a seismic Category I structure.

Figure 1 provides a simplified diagram of the transmission network, Offsite Electric Power System, and onsite Class 1E AC Distribution System (Onsite Electric Power System).

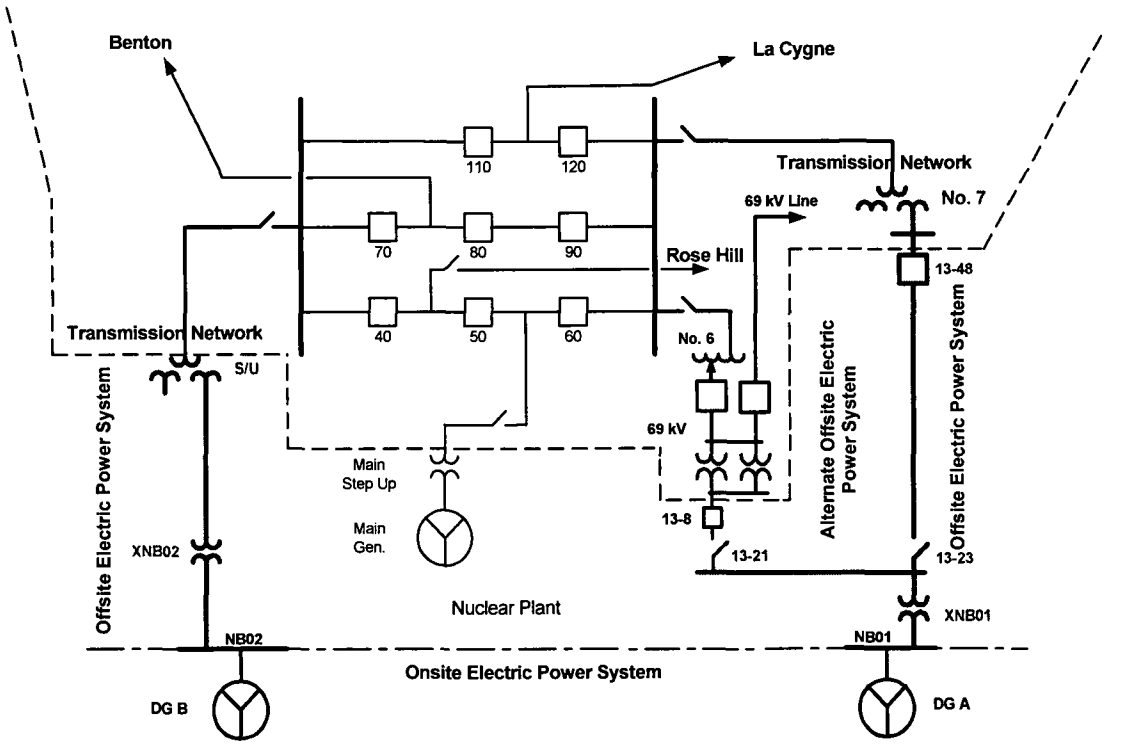

FIGURE 1

- **Background**

1995 License Amendment Request

In September 1995, WCNOC submitted a license amendment request (Reference 4) for revisions to TS 3/4.8.1 to achieve an overall improvement in DG reliability and availability. This included revising SR 4.8.1.1.2g.7) that stated:

> Verifying the diesel generator operates for at least 24 hours. During the first 2 hours of this test, the diesel generator shall be loaded to an indicated 6600 to 6821 kW** and during the remaining 22 hours of this test, the diesel generator shall be loaded to an indicated 6000 to 6201 kW.** The generator voltage and frequency shall be 4160 +160 –420 volts and 60 ± 1.2 Hz during this test. Within 5 minutes after completing this 24 hour test, perform specification 4.8.1.1.2g.6b*;
>
> *This test shall be preceded by an engine prelube period and/or other warmup procedures recommended by the manufacturer so that the mechanical stress and wear on the diesel engine is minimized.
> **This band is meant as guidance to avoid routine overloading of the engine. Loads in excess of this band for special testing under direct monitoring or momentary variations due to changing bus loads shall not invalidate this test.

to SR 4.8.1.1.2g.6) that states:

> Verifying the full-load carrying capability of the diesel generator at a power factor between 0.8 and 0.9 for an interval of not less than 24 hours at 5580 to 6201 kW (indicated)*. The generator voltage and frequency shall be maintained within 4260 +160 –420 volts and 60 ± 1.2 Hz during this test;
>
> *This surveillance shall not be performed in Modes 1, or 2 and credit may be taken for unplanned events that satisfy this requirement.

Additionally, the amendment request proposed deleting SR 4.8.1.1.2g.8) that states:

> Verifying that the auto-connected loads to each diesel generator do not exceed 6201 kW.

The justification for the proposed change stated, in part:

> The emergency diesel generators at Wolf Creek Generating Station utilize Colt-Pielstick PC 2.5V 14 cylinder engines. The generator ratings are 6201 kilowatts continuous, 6635 kilowatts for 2000 hours, 6821 kilowatts for 168 hours (110 percent of rated continuous), and 7441 kilowatts for 30 minutes. All ratings are at a power factor of 0.8. The worst-case accident bus loading occurs during a station blackout, cold shutdown conditions with engineered safety features and non-engineered safety features loads connected. The bus loading under these conditions is 5822 kilowatts. Without non-engineered safety features loads connected, the bus load is 4556 kilowatts. Under LOCA conditions, recirculation phase, the maximum load (engineered safety features plus non-engineered safety features) is 5440 kilowatts. With LOCA recirculation conditions and only engineered safety features loads connected, the total bus load is

> 5258 kilowatts. At the continuous rated load of the emergency diesel generator (6201 kilowatts with power factor at 0.8), the normal fuel rack position is 47 to 49 millimeters. At the 110 percent power level (6821 kilowatts with power factor at 0.8), the fuel rack position is 51 to 52 millimeters. A total of 75 millimeters of fuel rack movement is available; however, a mechanical stop prevents movement above 55 millimeters. The ability of the governor actuator and fuel rack mechanism to move rapidly to the maximum fuel position is demonstrated each time a successful fast start of the emergency diesel generator is conducted. Therefore, as described above ample margin exists in the capacity of the emergency diesel generators to preclude overloading during the accident conditions.
>
> In addition, operating at 110 percent of rated load is detrimental to long-term emergency diesel generator reliability. The relationship between high loads and wear is well known for typical piston engine applications and engine manufactures have indicated that aging and wear significantly increase after 95 percent of the continuous load rating is achieved. Therefore, based on the Wolf Creek Generating Station emergency bus loading, the diesel generator rated capacity, and the increase in aging and wear, the requirement to perform the two hour margin test is considered unnecessary and detrimental to the long-term reliability of the emergency diesel generators.

This change was based, in part, on Regulatory Guide 1.9, Rev. 3, "Selection, Design, Qualification, and Testing of Emergency Diesel Generator Units Used as Class 1E Onsite Electrical Power Systems at Nuclear Power Plants," and NUREG-1431, "Standard Technical Specifications – Westinghouse Plants." Not performing the test for 2 hours at 105 to 110 percent of the continuous rating is an exception to Regulatory Guide 1.9.

<u>WCNOC Response to Comments from Teleconference (WO 96-0037 dated 3/8/96) (Reference 5)</u>

NRC Comment 4 asked if SR 4.8.1.1.2g.8) [verification that auto-connected loads are less than 6201 kW] was being deleted or relocated and requested information concerning how the surveillance was performed. SR requirement was to be relocated to USAR Chapter 16. The following was provided concerning how SR 4.8.1.1.2g.8) was performed:

> Total diesel generator kW load is determined using surveillance procedures STS KJ-001A [ISP-SA-2413A], "Integrated D/G And Safeguards Actuations Test Train A," and STS KJ-001B [ISP-SA-2413B] , "Integrated D/G And Safeguards Actuations Test Train B." The requirements of these procedures take into account indicated amp load, indicated voltage, and power factor. These procedures require that the kW load must be ≤ 6201 kW. The results of these tests are trended consistent with the Emergency Diesel Generator Reliability Program.

NRC Comment 6 indicated that proposed SR 4.8.1.1.2g.6), current SR 4.8.1.1.2g.7) [Endurance and Margin test –24 hour test including 2 hours at an overload condition] should still require the DG to operate for greater than 2 hours in an overloaded condition with a footnote indicating that this portion of the surveillance need not be performed provided the auto-connected loads remain below 6201 kW continuous rating of the DG. The following response was provided:

Proposed Technical Specification 4.8.1.1.2g.6 has been revised to verify the diesel generator operates for greater than or equal to 2 hours loaded to an indicated 6600 to 6821 kW if auto-connected loads increase above 6201 kW. Additionally, WCNOC and UE have retained the existing footnote to provide guidance to avoid routine overloading of the engine.

NRC Safety Evaluation for Amendment No. 101

The safety evaluation for Amendment No. 101, states, in part:

> The proposed changes result in a surveillance requirement that is in part consistent with the suggestions for the "Endurance and Margin Test" as described in RG 1.9, Revision 3. However, the requirement to operate each EDG for 2 hours at 105 to 110 percent of the continuous rated load as is suggested in RG 1.9, Revision 3, and currently required is not being proposed. The staff expressed concern regarding this exception. In response to this concern, the licensee documents that the EDGs at the Wolf Creek Generating Station utilize Colt-Pielstick PC 2.5V 14 cylinder engines. The generator ratings are 6201 kilowatts continuous, 6635 kilowatts for 2000 hours, 6821 kilowatts for 168 hours, and 7441 kilowatts for 30 minutes. All of these ratings are at a power factor of 0.8. In addition, the licensee documents that the worst-case accident bus loading occurs during a station blackout, cold shutdown conditions, with engineered and non-engineered safety features loads connected. The bus loading under these conditions is 5822 kilowatts; without non-engineered safety features loads connected, the bus loading is 4556 kilowatts. Under LOCA conditions, during the recirculation phase, the maximum load is 5440 kilowatts and with only engineered safety features loads connected, the total bus load is 5258 kilowatts. Further the licensee documents that at the continuous rated load of an EDG, the normal fuel rack position is 47 to 49 millimeters. At the 110 percent power level, the fuel rack position is 51 to 52 millimeters. A total of 75 millimeters of fuel rack movement is available; however, a mechanical stop prevents movement in excess of 55 millimeters. The ability of the governor actuator and fuel rack mechanism to move rapidly to the maximum fuel position is demonstrated each time a successful fast start of the EDG is performed. This indicates that the engine can produce the horsepower necessary for the 110 percent power level. In addition, the relationship between high loads and wear has been established for typical piston engine applications, and engine manufacturers have indicated that aging and wear significantly increase after 95 percent of the continuous load rating is achieved. As a result of the staff's concern, the licensee also added the following to the proposed TS: "Verify the diesel generator operates for 2 hours loaded to an indicated 6600 to 6821 kW if auto connected loads increase above 6201 kW." In addition, the following "*****" footnote was also added to the proposed TS: ***** This band is meant as guidance to avoid routine overloading of the engine. Loads in excess of this band for special testing under direct monitoring or momentary variations due to changing bus loads shall not invalidate this test." The above exception to RG 1.9, Revision 3, is acceptable on the bases of the Wolf Creek Generating Station emergency bus loading, the rated EDG capacity, the potential for increase EDG aging and wearing, and the added TS requirement of verifying the diesel generator operates for 2 hours loaded to an indicated 105 to 110 percent of continuous rated load if auto connected loads increase above 6201 kW.

NCV 05000482/2007006-08, "Diesel Generator Frequency Variation Not Considered in Loading Calculations"

In July 2007, the NRC completed a component design bases inspection and issued NRC Component Design Bases Inspection Report 05000482/2007006 (Reference 6). The inspection report identified a noncited violation of 10 CFR 50, Appendix B, Criterion III, "Design Control," for design basis information not adequately translated into the DG loading analysis. Specifically prior to July 16, 2007, the analysis providing the information in M-018-01502, "Engineering Report Wolf Creek NPP 6201 kW Diesel Generator Set," did not properly account for the technical specification allowable DG two percent frequency variation. The inspection report indicated that WCNOC failed to consider how the frequency variation could affect the design and licensing basis of the DGs. In response to the noncited violation, WCNOC performed a DG loading computation by implementing a number of adjustments (including accounting for the +/- 2% frequency band that addresses the transient loading analysis) and improvements to accurately assess DG loading.

The accounting for the +/-2% frequency band resulted in a maximum accident loading of 6310.2 kW under a "medium time" condition (defined as 30 minutes to 7 days) and a maximum accident loading of 5720.0 kW under a "long term" condition (defined as continuous operation greater than 7 days) for the "B" DG with frequency at the upper end of the band (61.2 Hz).

- **DG Loading Computation**

In addition to the establishment of administrative controls, further review and evaluation of the design basis worst case DG loading was performed to establish acceptable test load ranges to be specified in the TSs.

IEEE 387-1984, "IEEE Standard Criteria for Diesel-Generator Units Applied as Standby Power Supplies for Nuclear Power Generating Stations," Section 3.7 defines the rating of the DG unit as:

> Continuous rating - The electric power output capability that the diesel-generator unit can maintain in the service environment for 8760 h of operation per (common) year with only scheduled outages for maintenance.
>
> Short time rating - The electric power output capability that the diesel-generator unit can maintain in the service environment for 2 h in any 24-h period, without exceeding the manufacturer's design limits and without reducing the maintenance interval established for the continuous rating.

A review of the Specification M-018, "Design Specification for Standby Diesel Generators," requirements for the DG and the manufacturer's submittal documents finds that the generator has been supplied with four ratings—continuous, 2000 hour, 7 day and 30 minute. These ratings are as follows:

- Continuous 100% x 6201 kW = 6201 kW
- 2000 hour 107% x 6201 kW = 6635 kW
- 7 day 110% x 6201 kW = 6821 kW
- 30 minutes 120% x 6201 kW = 7441 kW

Updated Safety Analysis Report (USAR) Section 8.3.1.1.3 states, in part: "The generator 2-hour rating is equal to the 7-day rating." Regulatory Guide 1.9, Rev. 3 (Reference 7), Section 2.2.9, states, in part: "Demonstrate full-load carrying capability at a power factor between 0.8 and 0.9 for an interval of not less than 24 hours, of which 2 hours are at a load equal to 105 to 110 percent of the continuous rating of the emergency diesel generator, and 22 hours are at a load equal to 90 to 100 percent of its continuous rating." This essentially describes the same 2-hour testing requirements as the IEEE Standard's short time rating, which specifies the 2-hour test to be 110% of the continuous rating. The 110% of the continuous rating of 6201 kW equates to 6821 kW, which is the DG manufacturer's 7 day rating. Therefore the IEEE Standard's 2-hour short time rating for our DG is equal to the DG manufacturer's 7 day rating, which is 6821 kW.

Loading Tabulation

Drawing E-11005 provides a list of loads supplied by each DG during a LOOP. It also provides the loading on each DG during a Main Steam Line Break (MSLB), Large Break Loss of Cooling Accident (LBLOCA), and Small Break Loss of Cooling Accident (SBLOCA). The design basis accident (DBA) loadings are shown concurrent with a LOOP. The DG loads are further broken down into three time periods to correspond to a distinct generator set rating. This approach provides a more realistic analysis of actual DG loading requirements, and allows non-"Greater than 7 Days" (previously designated as "Long Time") loads to be separated into two shorter time periods—"0-30 Minutes" (previously designated as "Short Time") and "30 Minutes to 7 Days" (previously designated as "Medium Time"). The following time designations on Drawing E-11005 are utilized to avoid having the appearance of a short time rating applying to both a 30-minute time period and a 2-hour time period.

- 0-30 minutes: The DG has a 30-minute rating of 7441 kW, which is 120% of the continuous rating of 6201 kW. This time period would cover all continuously energized loads, the immediate loading due to Load Shedding/Emergency Load Sequencing, as well as immediate/intermittent loads such as motor-operated valves.

- 30 minutes to 7 days: The DG has a 7 day rating of 6821 kW, which is 110% of the continuous rating of 6201 kW. This intermediate time period would cover Hot Standby operations during a LOOP, operations during a MSLB, and would also cover the injection and recirculation phases during a LBLOCA or SBLOCA.

- Greater than 7 days: The DG has a 2,000-hour (approximately 83 days) rating of 6635 kW, which is 107% of the continuous rating of 6201 kW. Although 83 days envelops the expected mission time of the DG, the 6635 kW rating is not used for the DG loading analysis; the continuous rating of 6201 kW is used consistent with the definitions in IEEE 387-1984 and Regulatory Guide 1.9. This time period would cover cold shutdown operations during a LOOP, operations during a MSLB, and would also cover an extended recirculation phase during a LBLOCA or SBLOCA.

A determination of which loads could potentially be energized, during which time period, for each accident type, was made through extensive coordination with Operations personnel. Operations personnel utilized plant specific emergency operating procedures and simulator runs to develop DG loading sequences. This provides assurance that the DG loading will remain within the DG rating under analyzed accident conditions.

Loading Considerations

Loads on drawing E-11005 are determined from the load tables and notes on drawing E-11005A, "Emergency Diesel Generator Loading Data." Loading methodology is generally established by the following 3 General Notes found on drawing E-11005A:

1. Completed Electric Motor Data Sheets associated with the applicable Motor Spec will be used to determine motor data. Motor data (such as FLA, PF, LRA) from motor test reports will be used only when generic information has not been provided. Minor variances between the motor spec data and motor test report data are to be expected.

2. When determining brake horsepower requirements, both the Fan/Pump Data Sheets and the fan/pump performance test report data will be compared. For conservatism, the larger of the two values will be used to determine diesel generator loading.

3. When a replacement motor has been approved in addition to the originally furnished and installed motor, the motor data transferred to E-11005 will be a compilation that will provide the worst-case for starting and running the Emergency Diesel Generator.

The primary method for determining power requirements for the actual DG motor loads is by using brake horsepower from the pump/fan curves. The brake horsepower will, when appropriate, be obtained from the pump curves at design flow conditions, not at run-out flow conditions. This method provides a very close depiction of actual DG loading (Running KW (KW_R)), and uses the standard conversion from horsepower to kilowatts, and the motor efficiency:

$$KW_R = BHPx\frac{0.745712}{eff.}$$

A secondary method, when brake horsepower and motor efficiency data is not available, is used to determine kW loading (Full Load KW (KW_{FL})). This method over-estimates DG loading as it has no regard to actual pump or fan loading, but uses full load motor data in the standard power equation:

$$KW_{FL} = \frac{\sqrt{3}xVxFLAxpf}{1000}$$

Motor manufacturers typically provide power factors for 100% load, 75% load, and 50% load. The ratio of actual running load to calculated full load (KW_R/KW_{FL}), designated as percent load, is used to identify the nearest provided Running Power Factor (PF_R). For example, the power factor provided for a 75% load is used whenever the percent loading value falls between 0.625 and 0.875. When the power factor is unknown, a standard value of 0.85 is assumed.

The methodology established to address miscellaneous loads such as, for example, 120/208 V Motor Control Center (MCC) distribution panel loading, is based on an 80% concurrent Load Factor (LF) of all actual connected loads, plus a 10% Multiplying Factor (MF) that is meant to account for minor load growth without having to re-analyze the DG loading. All MCC distribution panel loads do not operate concurrently. All discharge dampers do not operate continuously, all relays are not energized simultaneously, all space heaters are thermostatically controlled and will cycle off and on. (The space heaters alone account for roughly 50% of all MCC distribution panel connected loads.) It is very conservatively estimated that 60 to 70% of the loads could be concurrent. Using an 80% concurrent load factor allows for additional design margin.

$$KW_R = KW_{FL} x LF x MF$$

Frequency Considerations

The frequency of the DGs cannot be strictly maintained at exactly 60 Hz when operating independently of the grid during a LOOP, or DBA concurrent with LOOP. Due to the pump affinity laws, the power for variable torque loads such as the induction motors for centrifugal pumps and fans will increase by the cube of the frequency. This represents a 6.12% increase in generator loading ($1.02^3 = 1.0612$) if the generator ever actually operated at 61.2 Hz. The power for constant torque loads, such as motor-operated valves and pressure controlled positive displacement pumps, is directly proportional to the motor speed. Finally, the power for loads such as lighting, battery chargers, and heaters are independent of frequency. Applying these factors to the loads on drawing E-11005, Rev. 36 yields a medium time loading of 6315.7 kW at a worst-case over-frequency of 61.2 Hz.

The TSs currently allow the DG frequency range for steady state loading conditions to be 60 Hz ± 2%. The source for the ± 2% range is found in Regulatory Guide 1.9, as it stipulates that the DG unit design should be such that at no time during the loading sequence should the frequency decrease to less than 95 percent of nominal, and that frequency should be restored to within 2% of nominal in less than 60% of each load-sequence interval for stepload increase, and in less than 80% of each load-sequence interval for disconnection of the single largest load. As the load-sequence intervals for the DGs are typically 5 seconds, this would require the transitory frequency to be restored to be ≥ 58.8 Hz and ≤ 61.2 Hz within 3 to 4 seconds. This design consideration for transitory frequency recovery has not changed.

The DGs, as 14-pole machines, have a rated speed of 514 revolutions per minute (RPM). Procedure MPE NE-003, "Governor Adjustments for Emergency Diesel Generator NE01," and procedure MPE NE-002, "Governor Adjustments for Emergency Diesel Generator NE02," are utilized for setup of the DG governor following certain maintenance activities and set the digital reference unit such that the DGs will achieve 517 RPM upon starting. Setting the DG governors to maintain 517 RPM equates to a steady state frequency of 60.32 Hz. Specification M-018, "Design Specification for Standby Diesel Generators," indicates the DGs have a steady state frequency variation of ± 0.25% (± 0.15 Hz). A slightly elevated frequency is established to assure the DG frequency is maintain above 57 Hz when starting the large 1750 horsepower Essential Service Water System pump motors. This is consistent with the design considerations of Regulatory Guide 1.9 that indicates the DG unit design should be such that at no time during the loading sequence should the frequency decrease to less than 95% (57 Hz) of nominal (60 Hz).

Steady state frequency swings of 58.8 to 61.2 Hz (60 Hz ± 2%) have not been experienced on the DGs. Review of historical test data indicates that the frequency has remained within a band of 59.6 Hz to 60.4 Hz. Changing the DG operating frequency band from ≥ 58.8 Hz and ≤ 61.2 Hz to ≥ 59.4 Hz and ≤ 60.6 Hz is in the conservative direction. By lowering the upper frequency limit of 61.2 Hz to a lesser value, the increase in loading on the DG due to elevated frequency is reduced which increases the DG loading margin. By raising the lower frequency limit of 58.8 Hz, the minimum pump flow rates are increased providing additional margin for the pumps.

The information in Table 1 is extracted from drawing E-11005, Rev. 36, with the DG loading based on a frequency band of ≥ 58.8 Hz and ≤ 61.2 Hz. The worst-case accident loading on the "B" DG of 6315.7 kW (medium time rating) exceeds the 6201 kW continuous rating. The worst-case accident loading on the "B" DG of 5725.5 kW (long time or continuous rating) is greater than the minimum test load value (5580 kW) specified in TSs. Therefore, the potential existed that the surveillance testing would not have bounded the design basis worst-case accident loading. WCNOC typically loads the DGs to 5900 kW to 6000 kW during load tests.

Table 1

	ACCIDENT TYPE	NE001 ("A") KW LOADING			NE002 ("B") KW LOADING		
		SHORT TIME	MEDIUM TIME	LONG TIME	SHORT TIME	MEDIUM TIME	LONG TIME
TOTAL LOAD ON DG (Frequency adjusted, with cable losses)	LOOP	4219.7	5511.9	4812.6	4228.4	5588.1	4888.8
	MSLB	5205.2	6239.5	4893.3	5203.3	6315.7	4969.5
	LBLOCA	5748.5	6109.4	5649.3	5746.6	6185.6	5725.5
	SBLOCA	4795.8	5832.9	5105.9	4793.9	5909.1	5182.2
DG RATING		7441	6821	6201	7441	6821	6201

The information in Table 2 is extracted from a proposed change to drawing E-11005 with the DG loading based on a frequency band of ≥ 59.4 Hz and ≤ 60.6 Hz. Utilizing a revised frequency band results in a worst-case accident loading of 6172.2 kW during the 30 minute – 7 day time period and a worst-case accident loading on the "B" DG of 5580.3 kW during the > 7 day time period.

Table 2

	ACCIDENT TYPE	NE001 ("A") KW LOADING			NE002 ("B") KW LOADING		
		< 30 min.	30 min. – 7 days	>7 days	< 30 min.	30 min. – 7 days	>7 days
TOTAL LOAD ON DG (Frequency adjusted, with cable losses)	LOOP	4112.0	5388.4	4689.1	4120.6	5464.6	4765.3
	MSLB	5066.0	6096.0	4768.7	5064.1	6172.2	4844.9
	LBLOCA	5593.5	5950.8	5504.1	5591.6	6027.0	5580.3
	SBLOCA	4668.5	5702.7	4976.6	4666.6	5778.9	5052.8
DG RATING		7441	6821	6201	7441	6821	6201

SRs 3.8.1.2, 3.8.1.7, 3.8.1.11, 3.8.1.12, 3.8.1.15, 3.8.1.19, and 3.8.1.20 are being revised to specify either a minimum frequency of ≥ 59.4 or frequency band of ≥ 59.4 Hz and ≤ 60.6 Hz.

SRs 3.8.1.3, 3.8.1.10, 3.8.1.14, and 3.8.1.15 are being revised to specify a value of ≥ 5650 kW for the lower end of the load band.

Additional changes to SR 3.8.1.14 include the deletion of Note 2 and changing the load band for the 2 hour portion of the test to ≥ 6300 kW and ≤ 6821 kW. Amendment No. 101 approved an exception to the guidance in Regulatory Guide 1.9, Section 2.2.9, that the 2 hour portion of the test was not required to be performed if auto-connected loads are less than 6201 kW. WCNOC believes that this exception should be deleted based on the intermediate time period loading value (6172.2 kW) being near the continuous rating (6201 kW). The intermediate loading value includes more than just auto-connected loads. Regulatory Guide 1.9, Section 2.2.9, also indicates that the 2 hour portion of the test be performed at a load equal to 105% (6511 kW) to 110% (6821 kW) of the continuous rating. Reference 1 indicates that the tests performed should most closely simulate the actual stresses on the machine to gain confidence in its readiness and can be achieved only when the DG is loaded to its expected design-basis loading condition. Specifying a loading band of ≥ 6300 kW and ≤ 6821 kW bounds the expected design-basis loading conditions and minimizes undesirable stress and wear on the DG.

Voltage Considerations

Current TS require the DGs to start from standby conditions and achieve in ≤ 12 seconds a voltage ≥ 3740 V and frequency ≥ 58.8 Hz and to achieve a steady state voltage ≥ 3740 V and ≤ 4320 V. A review of the historical data from the surveillance test procedures performed over the last several years indicates that the minimum voltage observed is above 4000 V. Raising the minimum DG voltage more accurately reflects actual system voltage conditions, significantly improves equipment operation, and will provide additional design margin in the DG transient analysis calculation. A minimum steady state output voltage of 3950 V is 95% of the nominal 4160 V output voltage. This value, which is 210 V above the minimum utilization voltage specified in ANSI C84.1-1982, "American National Standard for Electric Power Systems and Equipment – Voltage Ratings (60 Hz)," allows for voltage drop to the terminals of 4000 V motors whose minimum operating voltage is specified as 90% or 3600 V.

SRs 3.8.1.2, 3.8.1.7, 3.8.1.11, 3.8.1.12, 3.8.1.15, 3.8.1.19, and 3.8.1.20 are being revised to specify either a minimum voltage or minimum steady state voltage of ≥ 3950 V.

4.0 REGULATORY EVALUATION

4.1 Applicable Regulatory Requirements/Criteria

Section 182a of the Atomic Energy Act requires applicants for nuclear power plant operating licenses to include Technical Specifications (TSs) as part of the operating license. The TSs ensures the operational capability of structures, systems, and components that are required to protect the health and safety of the public. The U.S. Nuclear Regulatory Commission's (NRC's) requirements related to the content of the TSs are contained in Section 50.36 of the Title 10 of the *Code of Federal Regulations* (10 CFR 50.36) which requires that the TSs include items in

the following specific categories: (1) safety limits, limiting safety system settings, and limiting control settings; (2) limiting conditions for operation; (3) surveillance requirements per 10 CFR 50.36(c)(3); (4) design features; and (5) administrative controls.

General Design Criteria (GDC) 17, "Electric power systems," of 10 CFR 50, Appendix A, "General Design Criteria for Nuclear Power Plants," requires, in part, that an onsite electric power system shall be provided to permit functioning of structures, systems, and components important to safety. The onsite electric power supplies and the onsite electric distribution system shall have sufficient independence, redundancy, and testability to perform their safety functions assuming a single failure. In addition, this criterion requires provisions to minimize the probability of losing electric power from any of the remaining supplies as a result of the loss of power from the unit, the transmission network, or the onsite electric power supplies.

GDC 18, "Inspection and Testing of Electric Power Systems," requires that electric power systems important to safety be designed to permit appropriate periodic inspection and testing to demonstrate operability and functional performance.

The proposed change does not violate any requirement for assuring the OPERABILITY of the DG and maintaining the plant design and licensing basis. The change verifies the required parameters are within prescribed limits and independently verifies that the time assumed in the accident analysis is satisfied. This testing is performed at the stipulated frequencies to assure continued OPERABILITY of the DG. The evaluations documented above confirm that WCNOC will continue to comply with all applicable regulatory requirements.

4.2 Significant Hazards Consideration

The proposed amendment revises Technical Specifications (TS) 3.8.1, "AC Sources - Operating," Surveillance Requirements (SR) related to Diesel Generator (DG) test loads, voltage, and frequency in SR 3.8.1.2, SR 3.8.1.3, SR 3.8.1.7, SR 3.8.1.10, SR 3.8.1.11, SR 3.8.1.12, SR 3.8.1.14, SR 3.8.1.15, SR 3.8.1.19, and SR 3.8.1.20.

WCNOC has evaluated whether or not a significant hazards consideration is involved with the proposed amendment(s) by focusing on the three standards set forth in 10 CFR 50.92, "Issuance of amendment," Part 50.92(c), as discussed below:

1. Does the proposed amendment involve a significant increase in the probability or consequences of an accident previously evaluated?

   Response: No.

   The diesel generators are required to be OPERABLE in the event of a design basis accident coincident with a loss of offsite power to mitigate the consequences of the accident. The diesel generators are not accident initiators and therefore these changes do not involve a significant increase in the probability of an accident previously evaluated.

   The accident analyses assume that at least one engineered safety feature bus is provided with power either from the offsite circuits or the diesel generators. The Technical Specification change proposed in this license amendment request will continue to assure that the diesel generators have the capacity and capability to assume their maximum design

basis accident loads. The proposed change does not significantly change how the plant would mitigate an accident previously evaluated.

The proposed change does not adversely affect accident initiators or precursors nor alter the design assumptions, conditions, and configuration of the facility or the manner in which the plant is operated and maintained. The proposed change does not adversely affect the ability of structures, systems, and components (SSC) to perform their intended safety function to mitigate the consequences of an initiating event within the assumed acceptance limits. The proposed change does not affect the source term, containment isolation, or radiological release assumptions used in evaluating the radiological consequences of any accident previously evaluated. Further, the proposed change does not increase the types and amounts of radioactive effluent that may be released offsite, nor significantly increase individual or cumulative occupational/public radiation exposure.

Therefore, the proposed change does not represent a significant increase in the probability or consequences of an accident previously evaluated.

2. Does the proposed change create the possibility of a new or different kind of accident from any accident previously evaluated?

   Response: No

   The proposed Technical Specification change does not involve a change in the plant design, system operation, or the use of the diesel generators. The proposed change requires the diesel generators to be tested at increased loads which envelope the actual power demand requirements for the diesel generators during design basis conditions. These revised loads continue to demonstrate the capability and capacity of the diesel generators to perform their required functions. There are no new failure modes or mechanisms created due to testing the diesel generators at the proposed test loading. Testing of the emergency diesel generators at the proposed test loadings does not involve any modification in the operational limits or physical design of plant systems. There are no new accident precursors generated due to the proposed test loadings.

   Therefore, it is concluded that the proposed change does not create the possibility of a new or different kind of accident from any accident previously evaluated.

3. Does the proposed change involve a significant reduction in a margin of safety?

   Response: No

   The proposed Technical Specification change will continue to demonstrate that the diesel generators meet the Technical Specification definition of OPERABILITY, that is, the proposed tests will demonstrate that the diesel generators will perform their safety function and the necessary diesel generator attendant instrumentation, controls, cooling, lubrication and other auxiliary equipment required for the emergency diesel generators to perform their safety function loads are also tested at these proposed loadings. The proposed testing will also continue to demonstrate the capability and capacity of the diesel generators to supply their required loads for mitigating a design basis accident.

The proposed change does not alter the manner in which safety limits, limiting safety system settings or limiting conditions for operation are determined. The safety analysis acceptance criteria are not impacted by this change. The proposed change will not result in plant operation in a configuration outside the design basis.

Therefore, it is concluded that the proposed change does not involve a significant reduction in a margin of safety.

Based on the above, WCNOC concludes that the proposed amendment does not involve a significant hazards consideration under the standards set forth in 10 CFR 50.92(c), and, accordingly, a finding of "no significant hazards consideration" is justified.

4.3 Conclusions

In conclusion, based on the considerations discussed above, (1) there is reasonable assurance that the health and safety of the public will not be endangered by operation in the proposed manner, (2) such activities will be conducted in compliance with the Commission's regulations, and (3) the issuance of the amendment will not be inimical to the common defense and security or to the health and safety of the public.

5.0 ENVIRONMENTAL CONSIDERATION

WCNOC has evaluated the proposed amendment for environmental considerations. The review has determined that the proposed amendment would change requirements with respect to installation or use of a facility component located within the restricted area, as defined in 10 CFR 20, and would change an inspection or surveillance requirement. However, the proposed amendment does not involve (i) a significant hazards consideration, (ii) a significant change in the types or significant increase in the amounts of any effluent that may be released offsite, or (iii) a significant increase in individual or cumulative occupational radiation exposure. Accordingly, the proposed amendment meets the eligibility criterion for categorical exclusion set forth in 10 CFR 51.22(c)(9). Therefore, pursuant to 10 CFR 51.22(b), no environmental impact statement or environmental assessment need be prepared in connection with the proposed amendment.

6.0 REFERENCES

1. NRC Memorandum, "Staff Response to TIA 2005-009 Regarding Emergency Diesel Generator Testing, Revision 1 (TAC NO. MD3715)," July 11, 2007.

2. WCNOC Drawing E-11005, "List of Loads Supplied by Emergency Diesel Generator," Revision 35, May 27, 2011.

3. NRC letter from J. C. Stone, USNRC, to N. S. Carns, WCNOC, "Wolf Creek Generating Station - Amendment No. 101 to Facility Operating License No. NPF-42 (TAC NO. M89995), August 9, 1996.

4. WCNOC letter ET 95-0099, "Revision to Technical Specification 3/4.8.1, "Electrical Power Systems – A. C. Sources"," September 15, 1995.

5. WCNOC letter WO 96-0037, "Response to Request for Additional Information Concerning the Revision to Technical Specification 3/4.8.1, Electrical Power Systems – A. C. Sources"," March 8, 1996.

6. NRC letter from W. B. Jones, USNRC to R. A. Muench, WCNOC, "Wolf Creek Generating Station – NRC Component Design Bases Inspection Report 05000482/2007006," October 15, 2007.

PROPOSED TECHNICAL SPECIFICATION CHANGES (MARK-UP)

SURVEILLANCE REQUIREMENTS

	SURVEILLANCE	FREQUENCY
SR 3.8.1.1	Verify correct breaker alignment and indicated power availability for each offsite circuit.	7 days
SR 3.8.1.2	----------NOTES---------- 1. Performance of SR 3.8.1.7 satisfies this SR. 2. All DG starts may be preceded by an engine prelube period and followed by a warmup period prior to loading. 3. A modified DG start involving idling and gradual acceleration to synchronous speed may be used for this SR as recommended by the manufacturer. When modified start procedures are not used, the time, voltage, and frequency tolerances of SR 3.8.1.7 must be met. ---------- Verify each DG starts from standby conditions and achieves steady state voltage ≥ ~~3740~~ 3950 V and ≤ 4320 V, and frequency ≥ ~~58.8~~ 59.4 Hz and ≤ ~~61.2~~ 60.6 Hz.	31 days

(continued)

SURVEILLANCE REQUIREMENTS (continued)

SURVEILLANCE		FREQUENCY
SR 3.8.1.3	----------NOTES---------- 1. DG loadings may include gradual loading as recommended by the manufacturer. 2. Momentary transients outside the load range do not invalidate this test. 3. This Surveillance shall be conducted on only one DG at a time. 4. This SR shall be preceded by and immediately follow without shutdown a successful performance of SR 3.8.1.2 or SR 3.8.1.7. ---------- Verify each DG is synchronized and loaded and operates for ≥ 60 minutes at a load ≥ ~~5680~~ 5650 kW and ≤ 6201 kW.	31 days
SR 3.8.1.4	Verify each fuel oil transfer pump starts on low level in the associated day tank standpipe.	31 days
SR 3.8.1.5	Check for and remove accumulated water from each day tank.	31 days
SR 3.8.1.6	Verify each fuel oil transfer system operates to transfer fuel oil from the storage tank to the day tank.	31 days

(continued)

SURVEILLANCE REQUIREMENTS (continued)

SURVEILLANCE		FREQUENCY
SR 3.8.1.7	----------NOTE---------- All DG starts may be preceded by an engine prelube period. ---------- Verify each DG starts from standby condition and achieves: a. In ≤ 12 seconds, voltage ≥ ~~3740~~ 3950 V and frequency ≥ ~~58.8~~ 59.4 Hz; and b. Steady state voltage ≥ ~~3740~~ 3950 V and ≤ 4320 V, and frequency ≥ ~~58.8~~ 59.4 Hz and ≤ ~~61.2~~ 60.6 Hz.	184 days
SR 3.8.1.8	Not Used.	
SR 3.8.1.9	Not Used.	
SR 3.8.1.10	Verify each DG operating at a power factor ≤ 0.9 and ≥ 0.8 does not trip and voltage is maintained ≤ 4784 V and frequency is maintained ≤ 65.4 Hz during and following a load rejection of ≥ ~~5580~~ 5650 kW and ≤ 6201 kW.	18 months

(continued)

SURVEILLANCE REQUIREMENTS (continued)

SURVEILLANCE		FREQUENCY
SR 3.8.1.11	----------NOTES---------- 1. All DG starts may be preceded by an engine prelube period. 2. This Surveillance shall not normally be performed in MODE 1 or 2. However, portions of the Surveillance may be performed to reestablish OPERABILITY provided an assessment determines the safety of the plant is maintained or enhanced. ----------	
	Verify on an actual or simulated loss of offsite power signal: a. De-energization of emergency buses; b. Load shedding from emergency buses; c. DG auto-starts from standby condition and: 1. energizes permanently connected loads in ≤ 12 seconds, 2. energizes auto-connected shutdown loads through the shutdown sequencer, 3. maintains steady state voltage ≥ ~~3740~~ 3950 V and ≤ 4320 V, 4. maintains steady state frequency ≥ ~~58.8~~ 59.4 Hz and ≤ ~~61.2~~ 60.6 Hz, and 5. supplies permanently connected and auto-connected shutdown loads for ≥ 5 minutes.	18 months

(continued)

SURVEILLANCE REQUIREMENTS (continued)

SURVEILLANCE		FREQUENCY
SR 3.8.1.12	----------NOTES---------- 1. All DG starts may be preceded by a prelube period. 2. This Surveillance shall not normally be performed in MODE 1 or 2. However, portions of the Surveillance may be performed to reestablish OPERABILITY provided an assessment determines the safety of the plant is maintained or enhanced. ----------	
	Verify on an actual or simulated Engineered Safety Feature (ESF) actuation signal each DG auto-starts from standby condition and: a. In ≤ 12 seconds after auto-start and during tests, achieves voltage ≥ ~~3740~~ 3950 V and frequency ≥ ~~58.8~~ 59.4 Hz; b. Achieves steady state voltage ≥ ~~3740~~ 3950 V and ≤ 4320 V, and frequency ≥ ~~58.8~~ 59.4 Hz and ≤ ~~61.2~~ 60.6 Hz; c. Operates for ≥ 5 minutes; d. Permanently connected loads remain energized from the offsite power system; and e. Emergency loads are auto-connected and energized through the LOCA sequencer from the offsite power system.	18 months

(continued)

SURVEILLANCE REQUIREMENTS (continued)

SURVEILLANCE		FREQUENCY
SR 3.8.1.14	----------NOTES---------- 1. Momentary transients outside the load and power factor ranges do not invalidate this test. ~~2. The DG may be loaded to ≥ 5580 kW and ≤ 6201 kW for the entire test period, if auto-connected loads are less than 6201 kW.~~ ---------- Verify each DG operating at a power factor ≤ 0.9 and ≥ 0.8 operates for ≥ 24 hours: a. For ≥ 2 hours loaded ≥ ~~6800~~ 6300 kW and ≤ 6821 kW; and b. For the remaining hours of the test loaded ≥ ~~5580~~ 5650 kW and ≤ 6201 kW.	18 months
SR 3.8.1.15	----------NOTES---------- 1. This Surveillance shall be performed within 5 minutes of shutting down the DG after the DG has operated ≥ 2 hours loaded ≥ ~~5580~~ 5650 kW and ≤ 6201 kW. Momentary transients outside of load range do not invalidate this test. 2. All DG starts may be preceded by an engine prelube period. ---------- Verify each DG starts and achieves: a. In ≤ 12 seconds, voltage ≥ ~~3740~~ 3950 V and frequency ≥ ~~58.8~~ 59.4 Hz; and b. Steady state voltage ≥ ~~3740~~ 3950 V and ≤ 4320 V, and frequency ≥ ~~58.8~~ 59.4 Hz and ≤ ~~61.2~~ 60.6 Hz.	18 months

(continued)

SURVEILLANCE REQUIREMENTS (continued)

SURVEILLANCE		FREQUENCY
SR 3.8.1.19	----------NOTES---------- 1. All DG starts may be preceded by an engine prelube period. 2. This Surveillance shall not normally be performed in MODE 1 or 2. However, portions of the Surveillance may be performed to reestablish OPERABILITY provided an assessment determines the safety of the plant is maintained or enhanced. ----------	
	Verify on an actual or simulated loss of offsite power signal in conjunction with an actual or simulated Safety Injection signal: a. De-energization of emergency buses; b. Load shedding from emergency buses; and c. DG auto-starts from standby condition and: 1. energizes permanently connected loads in ≤ 12 seconds, 2. energizes auto-connected emergency loads through load sequencer, 3. achieves steady state voltage ≥ ~~3740~~ 3950 V and ≤ 4320 V, 4. achieves steady state frequency ≥ ~~58.8~~ 59.4 Hz and ≤ ~~61.2~~ 60.6 Hz, and 5. supplies permanently connected and auto-connected emergency loads for ≥ 5 minutes.	18 months

(continued)

SURVEILLANCE REQUIREMENTS (continued)

SURVEILLANCE		FREQUENCY
SR 3.8.1.20	----------NOTE---------- All DG starts may be preceded by an engine prelube period. ----------	
	Verify when started simultaneously from standby condition, each DG achieves:	10 years
	a. In ≤ 12 seconds, voltage ≥ ~~3740~~ 3950 V and frequency ≥ ~~58.8~~ 59.4 Hz; and	
	b. Steady state voltage ≥ ~~3740~~ 3950 V and ≤ 4320 V, and frequency ≥ ~~58.8~~ 59.4 Hz and ≤ ~~61.2~~ 60.6 Hz.	
SR 3.8.1.21	----------NOTE---------- The continuity check may be excluded from the actuation logic test. ----------	
	Perform ACTUATION LOGIC TEST for each train of the load shedder and emergency load sequencer.	31 days on a STAGGERED TEST BASIS

REVISED TECHNICAL SPECIFICATION PAGES

SURVEILLANCE REQUIREMENTS

SURVEILLANCE		FREQUENCY
SR 3.8.1.1	Verify correct breaker alignment and indicated power availability for each offsite circuit.	7 days
SR 3.8.1.2	----------NOTES---------- 1. Performance of SR 3.8.1.7 satisfies this SR. 2. All DG starts may be preceded by an engine prelube period and followed by a warmup period prior to loading. 3. A modified DG start involving idling and gradual acceleration to synchronous speed may be used for this SR as recommended by the manufacturer. When modified start procedures are not used, the time, voltage, and frequency tolerances of SR 3.8.1.7 must be met. ---------- Verify each DG starts from standby conditions and achieves steady state voltage ≥ 3950 V and ≤ 4320 V, and frequency ≥ 59.4 Hz and ≤ 60.6 Hz.	31 days

(continued)

SURVEILLANCE REQUIREMENTS (continued)

SURVEILLANCE		FREQUENCY
SR 3.8.1.3	----------NOTES---------- 1. DG loadings may include gradual loading as recommended by the manufacturer. 2. Momentary transients outside the load range do not invalidate this test. 3. This Surveillance shall be conducted on only one DG at a time. 4. This SR shall be preceded by and immediately follow without shutdown a successful performance of SR 3.8.1.2 or SR 3.8.1.7. ---------- Verify each DG is synchronized and loaded and operates for ≥ 60 minutes at a load ≥ 5650 kW and ≤ 6201 kW.	31 days
SR 3.8.1.4	Verify each fuel oil transfer pump starts on low level in the associated day tank standpipe.	31 days
SR 3.8.1.5	Check for and remove accumulated water from each day tank.	31 days
SR 3.8.1.6	Verify each fuel oil transfer system operates to transfer fuel oil from the storage tank to the day tank.	31 days

(continued)

SURVEILLANCE REQUIREMENTS (continued)

SURVEILLANCE		FREQUENCY
SR 3.8.1.7	----------NOTE---------- All DG starts may be preceded by an engine prelube period. ---------- Verify each DG starts from standby condition and achieves: a. In ≤ 12 seconds, voltage ≥ 3950 V and frequency ≥ 59.4 Hz; and b. Steady state voltage ≥ 3950 V and ≤ 4320 V, and frequency ≥ 59.4 Hz and ≤ 60.6 Hz.	184 days
SR 3.8.1.8	Not Used.	
SR 3.8.1.9	Not Used.	
SR 3.8.1.10	Verify each DG operating at a power factor ≤ 0.9 and ≥ 0.8 does not trip and voltage is maintained ≤ 4784 V and frequency is maintained ≤ 65.4 Hz during and following a load rejection of ≥ 5650 kW and ≤ 6201 kW.	18 months

(continued)

SURVEILLANCE REQUIREMENTS (continued)

SURVEILLANCE		FREQUENCY
SR 3.8.1.11	----------NOTES---------- 1. All DG starts may be preceded by an engine prelube period. 2. This Surveillance shall not normally be performed in MODE 1 or 2. However, portions of the Surveillance may be performed to reestablish OPERABILITY provided an assessment determines the safety of the plant is maintained or enhanced. ----------	
	Verify on an actual or simulated loss of offsite power signal: a. De-energization of emergency buses; b. Load shedding from emergency buses; c. DG auto-starts from standby condition and: 1. energizes permanently connected loads in ≤ 12 seconds, 2. energizes auto-connected shutdown loads through the shutdown sequencer, 3. maintains steady state voltage ≥ 3950 V and ≤ 4320 V, 4. maintains steady state frequency ≥ 59.4 Hz and ≤ 60.6 Hz, and 5. supplies permanently connected and auto-connected shutdown loads for ≥ 5 minutes.	18 months

(continued)

SURVEILLANCE REQUIREMENTS (continued)

SURVEILLANCE		FREQUENCY
SR 3.8.1.12	----------NOTES---------- 1. All DG starts may be preceded by a prelube period. 2. This Surveillance shall not normally be performed in MODE 1 or 2. However, portions of the Surveillance may be performed to reestablish OPERABILITY provided an assessment determines the safety of the plant is maintained or enhanced. ----------	
	Verify on an actual or simulated Engineered Safety Feature (ESF) actuation signal each DG auto-starts from standby condition and: a. In ≤ 12 seconds after auto-start and during tests, achieves voltage ≥ 3950 V and frequency ≥ 59.4 Hz; b. Achieves steady state voltage ≥ 3950 V and ≤ 4320 V, and frequency ≥ 59.4 Hz and ≤ 60.6 Hz; c. Operates for ≥ 5 minutes; d. Permanently connected loads remain energized from the offsite power system; and e. Emergency loads are auto-connected and energized through the LOCA sequencer from the offsite power system.	18 months

(continued)

SURVEILLANCE REQUIREMENTS (continued)

SURVEILLANCE		FREQUENCY
SR 3.8.1.14	----------NOTE---------- Momentary transients outside the load and power factor ranges do not invalidate this test. ---------- Verify each DG operating at a power factor ≤ 0.9 and ≥ 0.8 operates for ≥ 24 hours: a. For ≥ 2 hours loaded ≥ 6300 kW and ≤ 6821 kW; and b. For the remaining hours of the test loaded ≥ 5650 kW and ≤ 6201 kW.	18 months
SR 3.8.1.15	----------NOTES---------- 1. This Surveillance shall be performed within 5 minutes of shutting down the DG after the DG has operated ≥ 2 hours loaded ≥ 5650 kW and ≤ 6201 kW. Momentary transients outside of load range do not invalidate this test. 2. All DG starts may be preceded by an engine prelube period. ---------- Verify each DG starts and achieves: a. In ≤ 12 seconds, voltage ≥ 3950 V and frequency ≥ 59.4 Hz; and b. Steady state voltage ≥ 3950 V and ≤ 4320 V, and frequency ≥ 59.4 Hz and ≤ 60.6 Hz.	18 months

(continued)

SURVEILLANCE REQUIREMENTS (continued)

SURVEILLANCE		FREQUENCY
SR 3.8.1.19	----------NOTES---------- 1. All DG starts may be preceded by an engine prelube period. 2. This Surveillance shall not normally be performed in MODE 1 or 2. However, portions of the Surveillance may be performed to reestablish OPERABILITY provided an assessment determines the safety of the plant is maintained or enhanced. ----------	
	Verify on an actual or simulated loss of offsite power signal in conjunction with an actual or simulated Safety Injection signal: a. De-energization of emergency buses; b. Load shedding from emergency buses; and c. DG auto-starts from standby condition and: 1. energizes permanently connected loads in ≤ 12 seconds, 2. energizes auto-connected emergency loads through load sequencer, 3. achieves steady state voltage ≥ 3950 V and ≤ 4320 V, 4. achieves steady state frequency ≥ 59.4 Hz and ≤ 60.6 Hz, and 5. supplies permanently connected and auto-connected emergency loads for ≥ 5 minutes.	18 months

(continued)

SURVEILLANCE REQUIREMENTS (continued)

SURVEILLANCE		FREQUENCY
SR 3.8.1.20	----------NOTE---------- All DG starts may be preceded by an engine prelube period. ---------- Verify when started simultaneously from standby condition, each DG achieves: a. In ≤ 12 seconds, voltage ≥ 3950 V and frequency ≥ 59.4 Hz; and b. Steady state voltage ≥ 3950 V and ≤ 4320 V, and frequency ≥ 59.4 Hz and ≤ 60.6 Hz.	10 years
SR 3.8.1.21	----------NOTE---------- The continuity check may be excluded from the actuation logic test. ---------- Perform ACTUATION LOGIC TEST for each train of the load shedder and emergency load sequencer.	31 days on a STAGGERED TEST BASIS

PROPOSED TS BASES CHANGES (FOR INFORMATION ONLY)

BASES

ACTIONS (continued)

I.1

Condition I corresponds to a level of degradation in which all redundancy in the AC electrical power supplies has been lost. At this severely degraded level, any further losses in the AC electrical power system will cause a loss of function. Therefore, no additional time is justified for continued operation. The unit is required by LCO 3.0.3 to commence a controlled shutdown.

SURVEILLANCE REQUIREMENTS

The AC sources are designed to permit inspection and testing of all important areas and features, especially those that have a standby function, in accordance with 10 CFR 50, Appendix A, GDC 18 (Ref. 8). Periodic component tests are supplemented by extensive functional tests during refueling outages (under simulated accident conditions). The SRs for demonstrating the OPERABILITY of the DGs are in accordance with the recommendations of Regulatory Guide 1.9 (Ref. 3), Regulatory Guide 1.108 (Ref. 9), and Regulatory Guide 1.137 (Ref. 10), as addressed in the USAR.

Where the SRs discussed herein specify voltage and frequency tolerances, the following is applicable. This minimum steady state output voltage of 3740 V is 90% of the nominal 4160 V output voltage. This value, which is specified in ANSI C84.1 (Ref. 11), allows for voltage drop to the terminals of 4000 V motors whose minimum operating voltage is specified as 90% or 3600 V. It also allows for voltage drops to motors and other equipment down through the 120 V level . This value provides for the OPERABILITY of required loads as shown by load flow calculations in support of NRC Branch Technical Position PSB-1. These calculations have demonstrated that no end use loads will be adversely affected from sustained operation above the degraded voltage allowable value as specified in SR 3.3.5.3. The 3740 V is above the calculated allowable value. The specified maximum steady state output voltage of 4320 V ensures that for a lightly loaded distribution system, the voltage at the terminals of 4000 V motors is no more than the maximum rated operating voltages. The specified minimum and maximum frequencies of the DG are 58.8 Hz and 61.2 Hz nominal frequency and are derived from the recommendations given in Regulatory Guide 1.9 (Ref. 3).

3950

95

210 V above the minimum utilization voltage

3950

59.4 Hz and 60.6 Hz.

SR 3.8.1.1

This SR ensures proper circuit continuity for the offsite AC electrical power supply to the onsite distribution network and availability of offsite AC electrical power. The breaker alignment verifies that each breaker is in its correct position to ensure that distribution buses and loads are connected to their preferred power source, and that appropriate

BASES

SURVEILLANCE REQUIREMENTS

SR 3.8.1.13 (continued)

mitigate the DBA is more critical than protecting the engine against minor problems that are not immediately detrimental to emergency operation of the DG.

The 18 month Frequency is based on engineering judgment and is intended to be consistent with expected fuel cycle lengths. Operating experience has shown that these components usually pass the SR when performed at the 18 month Frequency. Therefore, the Frequency was concluded to be acceptable from a reliability standpoint.

SR 3.8.1.14

(short-time rated load)

not greater than

Regulatory Guide 1.9, Rev. 3, (Ref. 3), requires demonstration once per 18 months that the DGs can start and run continuously at full load capability for an interval of not less than 24 hours, ≥ 2 hours of which is at a load ~~equivalent to~~ 110% of the continuous duty rating and the remainder of the time at a load equivalent to the continuous duty rating of the DG. ~~(Refer to discussion of Note 3 below).~~ The DG starts for this Surveillance can be performed either from standby or hot conditions. The provisions for prelubricating and warmup, discussed in SR 3.8.1.2, and for gradual loading, discussed in SR 3.8.1.3, are applicable to this SR.

The short-time rated load and the continuous rated load may be applied in either order.

(continuous rated load)

In order to ensure that the DG is tested under load conditions that are as close to design conditions as possible, testing must be performed using a power factor of ≥ 0.8 and ≤ 0.9 at a voltage of 4160 +160 ~~-420~~ -210 volts and a frequency of 60 ± ~~1.2~~ 0.6 Hz. This power factor is chosen to be representative of the actual design basis inductive loading that the DG would experience. The load band is provided to avoid routine overloading of the DG. Routine overloading may result in more frequent teardown inspections in accordance with vendor recommendations in order to maintain DG OPERABILITY.

Administrative controls for performing this SR in MODES 1 or 2, with the DG connected to an offsite circuit, ensure or require that:

a. Weather conditions are conducive for performing this SR.

b. The offsite power supply and switchyard conditions are conducive for performing this SR, which includes ensuring that switchyard access is restricted and no elective maintenance within the switchyard is performed.

c. No equipment or systems assumed to be available for supporting the performance of the SR are removed from service.

BASES

SURVEILLANCE REQUIREMENTS

SR 3.8.1.14 (continued)

The DG is considered OPERABLE during performance of the Surveillance, i.e., while it is paralleled to the offsite power source, consistent with the Technical Evaluation (i.e., Section 4.0) contained in the Safety Evaluation provided for Amendment No. 154 (Reference 17). This includes consideration of the potential challenges to the DG, its response to a LOCA and/or a loss of offsite power, and appropriate operator actions to restore the DG.

The 18 month Frequency is consistent with the recommendations of Regulatory Guide 1.9, Rev. 3 (Ref. 3), and is intended to be consistent with expected fuel cycle lengths.

This Surveillance is modified by ~~two~~ a Note~~s~~. ~~Note 1~~ The Note states that momentary transients due to changing bus loads do not invalidate this test. Similarly, momentary power factor transients outside the power factor range will not invalidate the test. ~~Note 2 permits the elimination of the 2-hour overload test, provided that the combined emergency loads on a DG do not exceed its continuous duty rating.~~

SR 3.8.1.15

This Surveillance demonstrates that the diesel engine can restart from a hot condition, such as subsequent to shutdown from normal Surveillances, and achieve the required voltage and frequency within 12 seconds. The 12 second time is derived from the requirements of the accident analysis to respond to a design basis large break LOCA. The 18 month Frequency is consistent with the recommendations of Regulatory Guide 1.9, Rev. 3 (Ref. 3).

This SR is modified by two Notes. Note 1 ensures that the test is performed with the diesel sufficiently hot. The load band is provided to avoid routine overloading of the DG. Routine overloads may result in more frequent teardown inspections in accordance with vendor recommendations in order to maintain DG OPERABILITY. The requirement that the diesel has operated for at least 2 hours at full load conditions prior to performance of this Surveillance is based on manufacturer recommendations for achieving hot conditions. Momentary transients due to changing bus loads do not invalidate this test. Note 2 allows all DG starts to be preceded by an engine prelube period to minimize wear and tear on the diesel during testing.