NEI 99-01 [Revision 6]

Development of Emergency Action Levels for Non-Passive Reactors

November 2011

[THIS PAGE IS LEFT BLANK INTENTIONALLY]

NEI 99-01 [Revision 6]

Nuclear Energy Institute

Development of Emergency Action Levels for Non-Passive Reactors

November 2011

Nuclear Energy Institute, 1776 I Street N. W., Suite 400, Washington D.C. (202.739.8000)

ACKNOWLEDGEMENTS

This document was prepared by the Nuclear Energy Institute (NEI) Emergency Action Level (EAL) Task Force.

NEI Chairperson: David Young

Preparation Team

Larry Baker – Exelon Nuclear/Corporate
Craig Banner – PSEG Nuclear/Salem and Hope Creek Nuclear Generating Stations
John Egdorf – Dominion Generation/Kewaunee Power Station
Jack Lewis – Entergy Nuclear/Corporate
C. Kelly Walker – Operations Support Services, Inc.

Review Team

Chris Boone – Southern Nuclear/Corporate
Kent Crocker – Progress Energy/Brunswick Nuclear Plant
Don Crowl – Duke Energy/Corporate
Gerry Holthaus – Xcel Energy/Monticello Nuclear Generating Plant
John Kaminski – Constellation Energy Nuclear Group/Nine Mile Point Nuclear Station
Walt Lee – TVA Nuclear/Corporate
Jay Maisler – Enercon Services, Inc.
Don Mothena – NextEra Energy/Corporate
Ken Meade – FENOC/Corporate
David Stobaugh – EP Consulting, LLC
Nick Turner – STARS/Callaway Plant
Maureen Zawalick – STARS/Diablo Canyon Power Plant

NOTICE

EXECUTIVE SUMMARY

Federal regulations require that a nuclear power plant operator develop a scheme for the classification of emergency events and conditions. This scheme is a fundamental component of an emergency plan in that it provides the defined thresholds that will allow site personnel to rapidly implement a range of pre-planned emergency response measures. An emergency classification scheme also facilitates timely decision-making by an Offsite Response Organization (ORO) concerning the implementation of precautionary or protective actions for the public.

The purpose of Nuclear Energy Institute (NEI) 99-01 is to provide guidance to nuclear power plant operators for the development of a site-specific emergency classification scheme. The methodology described in this document is consistent with Federal regulations, and related US Nuclear Regulatory Commission (NRC) requirements and guidance. In particular, this methodology has been endorsed by the NRC as an acceptable approach to meeting the requirements of 10 CFR § 50.47(b)(4), related sections of 10 CFR § 50, Appendix E, and the associated planning standard evaluation elements of NUREG-0654/ FEMA-REP-1, Rev. 1, *Criteria for Preparation and Evaluation of Radiological Emergency Response Plans and Preparedness in Support of Nuclear Power Plants*, November 1980.

NEI 99-01 contains a set of generic Initiating Conditions (ICs), Emergency Action Levels (EALs) and fission product barrier status thresholds. It also includes supporting technical basis information, developer notes and recommended classification instructions for users. Users should implement ICs, EALs and thresholds that are as close as possible to the generic material presented in this document with allowance for changes necessary to address site-specific considerations such as plant design, location, terminology, etc.

Properly implemented, the guidance in NEI 99-01 will yield a site-specific emergency classification scheme with clearly defined and readily observable EALs and thresholds. Other benefits include the development of a sound basis document, the adoption of industry-standard instructions for emergency classification (e.g., transient events, classification of multiple events, upgrading, downgrading, etc.), and incorporation of features to improve human performance. An emergency classification using this scheme will be appropriate to the risk posed to plant workers and the public, and should be the same as that made by another NEI 99-01 user plant in response to a similar event.

The individuals responsible for developing an emergency classification scheme are strongly encouraged to review all applicable NRC requirements and guidance prior to beginning their efforts. In addition, NEI maintains a standing task force to address issues and enhancements related to the NEI 99-01 methodology. Task force members are a valuable resource that developers may consult with questions concerning implementation of this document.

Finally, State and local requirements associated with an emergency classification scheme are not reflected in this generic guidance. Incorporation of these requirements, if any, should be performed on a case-by-case basis in conjunction with appropriate ORO personnel.

[THIS PAGE IS LEFT BLANK INTENTIONALLY]

TABLE OF CONTENTS

DEVELOMENT OF EMERGENCY ACTION LEVELS FOR NON-PASSIVE REACTORS

1 REGULATORY BACKGROUND

1.1 OPERATING REACTORS

Title 10, Code of Federal Regulations (CFR), Energy, contains the U.S. Nuclear Regulatory Commission (NRC) regulations that apply to nuclear power facilities. Several of these regulations govern various aspects of an emergency classification scheme. A review of the relevant sections listed below will aid the reader in understanding the key terminology provided in Section 3.0 of this document.

- 10 CFR § 50.47(a)(1)(i)
- 10 CFR § 50.47(b)(4)
- 10 CFR § 50.54(q)
- 10 CFR § 50.72(a)
- 10 CFR § 50, Appendix E, IV.B, Assessment Actions
- 10 CFR § 50, Appendix E, IV.C, Activation of Emergency Organization

The above regulations are supplemented by various regulatory guidance documents. Three documents of particular relevance to NEI 99-01 are:

- NUREG-0654/FEMA-REP-1, *Criteria for Preparation and Evaluation of Radiological Emergency Response Plans and Preparedness in Support of Nuclear Power Plants*, October 1980. [Refer to Appendix 1, *Emergency Action Level Guidelines for Nuclear Power Plants*]
- NUREG-1022, *Event Reporting Guidelines*: 10 CFR § 50.72 and § 50.73. [Refer to Section 3.1.1, *Immediate Notifications*]
- Regulatory Guide 1.101, *Emergency Response Planning and Preparedness for Nuclear Power Reactors*

1.2 PERMANENTLY DEFUELED STATION

NEI 99-01 provides guidance for an emergency classification scheme applicable to a permanently defueled station. This is a station that generated spent fuel under a 10 CFR § 50 license, has permanently ceased operations and will store the spent fuel onsite for an extended period of time. The emergency classification levels applicable to this type of station are consistent with the requirements of 10 CFR § 50 and the guidance in NUREG 0654/FEMA-REP-1.

In order to relax the emergency plan requirements applicable to an operating station, the owner of a permanently defueled station must demonstrate that no credible event can result in a significant radiological release beyond the site boundary. It is expected that this verification will confirm that the source term and motive force available in the permanently defueled condition are insufficient to warrant classifications of a Site Area Emergency or General Emergency. Therefore, the generic Initiating Conditions (ICs) and Emergency Action Levels (EALs)

applicable to a permanently defueled station may result in either a Notification of Unusual Event (NOUE) or an Alert classification.

The generic ICs and EALs are presented in Appendix C, *Permanently Defueled Station ICs/EALs*.

1.3 INDEPENDENT SPENT FUEL STORAGE INSTALLATION (ISFSI)

NEI 99-01 provides guidance for an emergency classification scheme applicable to an ISFSI. It may be used by licensees who elect to meet the requirements of 10 CFR § 72.32 via a site emergency plan developed and approved under 10 CFR § 50. The initiating conditions germane to a 10 CFR § 72.32 emergency plan (as described in NUREG-1567) are subsumed within the classification scheme for a 10 CFR § 50.47 emergency plan; therefore, the emergency classification levels applicable to an ISFSI are consistent with the requirements of 10 CFR § 50 and the guidance in NUREG 0654/FEMA-REP-1.

The analysis of potential onsite and offsite consequences of accidental releases associated with the operation of an ISFSI is contained in NUREG-1140, *A Regulatory Analysis on Emergency Preparedness for Fuel Cycle and Other Radioactive Material Licensees*. NUREG-1140 concluded that the postulated worst-case accident involving an ISFSI has insignificant consequences to public health and safety. This evaluation shows that the maximum offsite dose to a member of the public due to an accidental release of radioactive materials would not exceed 1 rem Effective Dose Equivalent.

The expectations for offsite response to an Alert classified under a 10 CFR § 72.32 emergency plan are generally consistent with those for a Notification of Unusual Event in a 10 CFR § 50.47 emergency plan (i.e., to provide assistance if requested). Even with regard to activation of a licensee's Emergency Response Organization (ERO), the ERO for a 10 CFR § 72.32 emergency plan is not that prescribed under a 10 CFR § 50.47 emergency plan (e.g., no emergency technical support). Consequently, the "Alerts" contemplated by 10 CFR § 72.32, have been classified as NOUEs in the NEI 99-01 methodology. To do otherwise could lead to an inappropriate response posture on the part of offsite response organizations.

The generic ICs and EALs for an ISFSI are presented in Section 8, ISFSI ICs/EALs, and Section 10, Hazards and Other Conditions Affecting Plant Safety ICs/EALs. IC E-HU1 covers the spectrum of credible natural and man-made events included within the scope of an ISFSI design, while HA1 addresses a HOSTILE ACTION directed against an ISFSI that is located outside the plant PROTECTED AREA but within the OWNER CONTROLLED AREA.

The licensee of a stand-alone ISFSI, Monitored Retrievable Storage Facility, or an ISFSI that may process and/or repackage spent fuel should consider use of the above referenced ICs and EALs in their emergency plan.

1.4 REGULATORY EXPECTATIONS CONCERNING EMERGENCY CLASSIFICATION SCHEME CHANGES

The NRC has issued a number of regulations and guidance documents concerning implementation of an emergency classification scheme. It is recommended that scheme developers work closely with licensing or regulatory compliance personnel to identify and

understand all applicable requirements and expectations. Questions may also be directed to the NEI Emergency Preparedness staff.

2 KEY TERMINOLOGY RELATED TO NEI 99-01 GUIDANCE

The following key terminology is used in the NEI 99-01 methodology. They are introduced here is aid the reader in understanding subsequent material. These terms are also included in Appendix B, Definitions.

2.1 EMERGENCY CLASSIFICATION LEVEL (ECL):

One of a set of names or titles established by the US Nuclear Regulatory Commission (NRC) for grouping off-normal events or conditions according to (1) potential or actual effects or consequences, and (2) resulting onsite and offsite response actions. The emergency classification levels, in ascending order of seriousness, are called:

- Notification of Unusual Event (NOUE)
- Alert
- Site Area Emergency (SAE)
- General Emergency (GE)

2.1.1 Notification of Unusual Event (NOUE)[1]

Events are in progress or have occurred which indicate a potential degradation of the level of safety of the plant or indicate a security threat to facility protection has been initiated. No releases of radioactive material requiring offsite response or monitoring are expected unless further degradation of safety systems occurs.

Purpose: The purpose of this classification is to assure that the first step in future response has been carried out, to bring the operations staff to a state of readiness, and to provide systematic handling of unusual event information and decision-making.

2.1.2 Alert

Events are in progress or have occurred which involve an actual or potential substantial degradation of the level of safety of the plant or a security event that involves probable life threatening risk to site personnel or damage to site equipment because of HOSTILE ACTION. Any releases are expected to be limited to small fractions of the EPA PAG exposure levels.

Purpose: The purpose of this classification is to assure that emergency personnel are readily available to respond if the situation becomes more serious or to perform confirmatory radiation monitoring if required, and provide offsite authorities current information on plant status and parameters.

2.1.3 Site Area Emergency

Events are in progress or have occurred which involve actual or likely major failures of plant functions needed for protection of the public or HOSTILE ACTION that results in intentional damage or malicious acts; 1) toward site personnel or equipment that could

[1] This term is sometimes shortened to Unusual Event (UE) or other similar site-specific terminology.

lead to the likely failure of or; 2) that prevent effective access to, equipment needed for the protection of the public. Any releases are not expected to result in exposure levels which exceed EPA PAG exposure levels beyond the site boundary.

Purpose: The purpose of the Site Area Emergency declaration is to assure that emergency response centers are staffed, to assure that monitoring teams are dispatched, to assure that personnel required for evacuation of near-site areas are at duty stations if the situation becomes more serious, to provide consultation with offsite authorities, and to provide updates to the public through government authorities.

2.1.4 General Emergency (GE)

Events are in progress or have occurred which involve actual or IMMINENT substantial core degradation or melting with potential for loss of containment integrity or HOSTILE ACTION that results in an actual loss of physical control of the facility. Releases can be reasonably expected to exceed EPA PAG exposure levels offsite for more than the immediate site area.

Purpose: The purpose of the General Emergency declaration is to initiate predetermined protective actions for the public, to provide continuous assessment of information from the licensee and offsite organizational measurements, to initiate additional measures as indicated by actual or potential releases, to provide consultation with offsite authorities, and to provide updates for the public through government authorities.

2.2 INITIATING CONDITION (IC)

An event or condition that meets the definition and attributes of one of the four emergency classification levels based on potential or actual effects or consequences.

Discussion: In NUREG-0654, the NRC introduced, but does not define, the term "initiating condition." Since the term is commonly used in nuclear power plant emergency planning, the definition above has been developed and combines both regulatory intent and the greatest degree of common usage among nuclear power plants.

An IC describes a unique event or condition, the severity or consequences of which meets the definition of an emergency classification level. An IC can be expressed as a continuous, measurable parameter (e.g., RCS leakage), an event (e.g., an explosion within the Protected Area) or the status of one or more fission product barriers (e.g., loss of the RCS barrier).

Considerations for assigning a particular Initiating Condition to an emergency classification level are discussed in Section 3.

2.3 EMERGENCY ACTION LEVEL (EAL):

A pre-determined, site-specific, observable threshold for an Initiating Condition that, when met or exceeded, places the plant in a given emergency classification level.

Discussion: The term "emergency action level" has been defined by example in the regulations, as noted in the above discussion concerning regulatory background. EAL statements may utilize a variety of criteria including instrument readings and status indications; observable events;

results of calculations and analyses; entry into particular procedures; and the occurrence of natural phenomena.

When making an emergency classification, the Emergency Director should consider all information having a bearing on the proper assessment of an EAL. This includes the EAL itself along with any notes, the operating mode applicability and the informing basis information. It is not expected that the Emergency Director read the basis information at the time of the emergency classification but that the individual be familiar with it (e.g., through exposure in training, tabletop drills, etc.).

2.4 FISSION PRODUCT BARRIER THRESHOLD:

A pre-determined, site-specific, observable threshold indicating the loss or potential loss of a fission product barrier.

Discussion: Fission product barrier thresholds represent threats to the defense in depth design concept that precludes the release of highly radioactive fission products to the environment. This concept relies on multiple physical barriers any one of which, if maintained intact, precludes the release of significant amounts of radioactive fission products to the environment. The primary fission product barriers are:

- Fuel Clad
- Reactor Coolant System (RCS)
- Containment

Upon determination that one or more fission product barrier thresholds have been exceeded, the combination of barrier loss and/or potential loss thresholds is compared to the fission product barrier IC/EAL criteria to determine the appropriate emergency classification.

When making an emergency classification, the Emergency Director should consider all information having a bearing on the proper assessment of a threshold. This includes the threshold itself along with any notes, the operating mode applicability and the informing basis information. It is not expected that the Emergency Director read the basis information at the time of the emergency classification but that the individual be familiar with it (e.g., through exposure in training, tabletop drills, etc.).

In some accident sequences, the ICs and EALs presented in the Abnormal Radiation Levels/ Radiological Effluent (A) Recognition Category will be exceeded at the same time, or shortly after, the loss of multiple fission product barriers. This redundancy provides higher assurance of an appropriate emergency classification and is intentional.

3 DESIGN OF THE NEI 99-01 EMERGENCY CLASSIFICATION SCHEME

3.1 ASSIGNMENT OF EMERGENCY CLASSIFICATION LEVELS (ECLS)

An effective emergency classification scheme must incorporate a realistic and accurate assessment of risk, both to plant workers and the public. There are obvious health and safety risks in underestimating the potential or actual threat from an event or condition; however, there are also risks in overestimating the threat as well (e.g., harm that may occur during an evacuation). The NEI 99-01 emergency classification scheme attempts to strike an appropriate balance between reasonably anticipated event or condition consequences, potential accident trajectories, and risk avoidance or minimization.

As noted in Section 1, there are a range of "non-emergency events" reported to the US Nuclear Regulatory Commission (NRC) staff in accordance with 10 CFR § 50.72. Clarification of these reporting requirements and example events are provided in NUREG-1022. Certain events reportable under the provisions of 10 CFR § 50.72 may also be classified as a Notification of Unusual Event if they are potential precursors of more serious events or otherwise warrant notification of local, State and Federal authorities.

In order to align Initiating Conditions (ICs) with the appropriate ECL, it is necessary to determine the attributes of each ECL. The goal of this process is to answer the question, "What types of events or conditions should be placed under each ECL?" The following sources provided information and context for the development ECL attributes.

- Assessments of the effects and consequences of different types of events and conditions
- Typical abnormal and emergency operating procedure setpoints and transition criteria
- Typical Technical Specification limits and controls
- Radiological Effluent Technical Specifications (RETS)/Offsite Dose Calculation Manual (ODCM) radiological release limits
- Review of selected Updated Final Safety Analysis Report (UFSAR) accident analyses
- Environmental Protection Agency (EPA) Protective Action Guidelines (PAGs)
- NUREG 0654, Appendix 1, *Emergency Action Level Guidelines for Nuclear Power Plants*
- Industry Operating Experience
- Input from industry subject matter experts and NRC staff members

The attributes of each ECL are presented below.

3.1.1 Notification of Unusual Event (NOUE)

A Notification of Unusual Event represents an event or condition that involves:

(A) A precursor to a more significant event or condition (e.g., inability to meet certain requirements in Technical Specifications or operating procedures, an event or SECURITY CONDITION that poses a threat to plant personnel or equipment, etc.).

(B) A minor loss of control of radioactive materials or the ability to control radiation levels within the plant.

(C) A consequence otherwise significant enough to warrant notification to local, State and

Federal authorities.

3.1.2 Alert

An Alert represents an event or condition that involves:

(A) A loss or potential loss of either the fuel clad or Reactor Coolant System (RCS) fission product barrier.

(B) An event or condition that significantly reduces the margin to a loss or potential loss of the fuel clad or RCS fission product barrier.

(C) A significant loss of control of radioactive materials or the ability to control radiation levels within the plant.

(D) A HOSTILE ACTION occurring within the OWNER CONTROLLED AREA, including those directed at an Independent Spent Fuel Storage Installation (ISFSI).

3.1.3 Site Area Emergency

A Site Area Emergency represents an event or condition that involves:

(A) A loss or potential loss of any two fission product barriers - fuel clad, RCS and/or containment.

(B) A precursor event or condition that may lead to the loss or potential loss of multiple fission product barriers within a relatively short period of time. Precursor events and conditions of this type include those that challenge the monitoring and/or control of multiple safety systems.

(C) A release of radioactive materials to the environment associated with the loss of two fission product barriers; offsite doses will not exceed any EPA PAG at or beyond the site boundary.

(D) A HOSTILE ACTION occurring within the plant PROTECTED AREA.

3.1.4 General Emergency

A General Emergency represents an event or condition that involves:

(A) Loss of any two fission product barriers AND loss or potential loss of the third barrier - fuel clad, RCS and/or containment.

(B) A precursor event or condition that, unmitigated, may lead to a loss of all three fission product barriers. Precursor events and conditions of this type include those that lead directly to core damage and loss of containment integrity.

(C) A release of radioactive materials to the environment associated with the loss of all three fission product barriers; offsite doses will exceed an EPA PAG at or beyond the site boundary.

(D) A HOSTILE ACTION resulting in the loss of key safety functions (reactivity control, core cooling/RPV water level or RCS heat removal) or damage to spent fuel.

3.1.5 Risk-Informed Insights

The assignment of ECLs also considered insights from several plant-specific probabilistic safety assessments (PSA - also known as probabilistic risk assessment, PRA). PSAs were reviewed to determine the risk associated with particular emergency conditions. Some generic insights from this review included:

1. Accident sequences involving a prolonged loss of all AC power are significant contributors to core damage frequency at many Pressurized Water Reactors (PWRs) and Boiling Water Reactors (BWRs). For this reason, a loss of all AC power for greater than 15 minutes, with the plant at or above Hot Shutdown, was assigned an ECL of Site Area Emergency. Precursor events to a loss of all AC power were also included as an Unusual Event and an Alert.

   A station blackout coping analyses performed in response to 10 CFR § 50.63 and Regulatory Guide 1.155, *Station Blackout*, may be used to determine a time-based criterion to demarcate between a Site Area Emergency and a General Emergency. The time dimension is critical to a properly anticipatory emergency declaration since the goal is to maximize the time available for State and local officials to develop and implement offsite protective actions.

2. For severe core damage events, uncertainties exist in phenomena important to accident progressions leading to containment failure. Because of these uncertainties, predicting the status of containment integrity may be difficult under severe accident conditions. This is why maintaining containment integrity alone following sequences leading to severe core damage is an insufficient basis for not escalating to a General Emergency.

3. PSAs indicated that leading contributors to latent fatalities were sequences involving a containment bypass, a large Loss of Coolant Accident (LOCA) with early containment failure, a Station Blackout lasting longer than the site-specific coping period, and a reactor coolant pump seal failure. The generic EAL methodology needs to be sufficiently rigorous to address these sequences in a timely fashion.

3.2 TYPES OF INITIATING CONDITIONS AND EMERGENCY ACTION LEVELS

The NEI 99-01 methodology makes use of symptom-based, event-based, and barrier-based ICs and Emergency Action Levels (EALs). The background of each type is discussed below.

Symptom-based ICs and EALs are parameters or conditions that are measurable over some continuous spectrum using plant instrumentation (e.g., core temperature, reactor coolant level, containment pressure, etc.). When one or more of these parameters or conditions are off-normal, reactor operators will implement procedures to identify the probable cause(s) and take corrective action. The level of seriousness that these symptoms indicate depends on the degree to which they have exceeded technical specification or plant design limits, the occurrence of other contemporaneous events or conditions, and the degree to which operators can regain control of

the plant function and bring it back to safe and expected levels.

Event-based ICs and EALs define occurrences with potential or actual safety significance, such as the failure of a high pressure safety injection pump, a safety valve failure, or a loss of electric power to some part of the plant. The range of seriousness of these events is dependent on the location, number of contemporaneous events, remaining plant safety margin, etc.

Barrier-based ICs and EALs refer to the level of challenge to the principal barriers against the release of radioactive material from the reactor core to the environment. These barriers are the fuel cladding, the reactor coolant system pressure boundary, and the containment. The barrier-based ICs and EALs consider the level of challenge to each individual barrier - potentially lost and lost - and the total number of barriers under challenge. Barrier-based EALs are a subset of symptom-based EALs that deal exclusively with symptoms indicating fission product barrier challenges.

Some barrier-based EAL thresholds include indications arising from the implementation of Emergency Operating Procedures (EOPs).

Observable indications for a NOUE or an Alert can be events (e.g., natural phenomena), symptoms (e.g., high temperature, low water level), or barrier-related (e.g., challenge to fission product barrier). As the ECL escalates to a Site Area Emergency and General Emergency, the initiating event(s) leading to the emergency classification becomes less important relative to the resulting symptoms (including those associated with challenges to fission product barriers). Thus, EALs for these emergency classification levels are primarily symptom and barrier-based.

General Emergency conditions would be accompanied by increased uncertainties in system or structure (e.g. containment) response and accident progression. To better assure timely classification and notification, EALs in this category are primarily expressed in terms of plant safety function status and parameters, with a secondary reliance on dose projections and field monitoring.

A large source-term within the containment may result in an EPA PAG being exceeded offsite due to expected and allowable containment leakage. The risk of exceeding a PAG increases with any challenges to the containment fission product barrier. NUREG-1228, *Source Estimations During Incident Response to Severe Nuclear Power Plant Accidents*, indicates the fuel clad failure must be greater than approximately 20% in order for there to be a major release of radioactivity requiring offsite protective actions.

The NEI 99-01 emergency classification scheme was developed recognizing that the applicability and mix of ICs and EALs will vary with plant mode. For example, some symptom-based ICs and EALs are available for assessment only in normal startup, operating or hot shutdown modes of operation when all fission product barriers are in place, and plant instrumentation and safety systems are fully operational as required by Technical Specifications. In cold shutdown and refueling modes, different symptom-based ICs and EALs will come into play to reflect the opening of systems for routine maintenance, the unavailability of some safety system components and the use of alternate instrumentation.

3.3 NSSS DESIGN DIFFERENCES

The NEI 99-01 emergency classification scheme accounts for the design differences between PWRs and BWRs by specifying EALs unique to each type of Nuclear Steam Supply System (NSSS). There are also significant design differences among PWR NSSSs; therefore, guidance is provided to aid in the development of EALs appropriate to different PWR NSSS types. Where necessary, development guidance also addresses unique considerations for advanced non-passive reactor designs such as the Advanced Boiling Water Reactor (ABWR), the Advanced Pressurized Water Reactor APWR and the Evolutionary Power Reactor (EPR).

Developers will need to consider the relevant aspects of their plant's design and operating characteristics when converting the generic guidance of this document into a site-specific classification scheme. The goal is to maintain as much fidelity to the intent of generic EALs as possible within the constraints imposed by the plant design and operating characteristics.

The guidance in NEI 99-01 is not applicable to advanced passive light water reactor designs. An Emergency Classification Scheme for this type of plant should be developed in accordance with NEI 07-01, Methodology for Development of Emergency Action Levels, Advanced Passive Light Water Reactors.

3.4 ORGANIZATION AND PRESENTATION OF GENERIC INFORMATION

The scheme's generic information is organized by Recognition Category in the following order.

- A - Abnormal Radiation Levels / Radiological Effluent – Section 6
- C - Cold Shutdown / Refueling System Malfunction – Section 7
- E - Independent Spent Fuel Storage Installation (ISFSI) – Section 8
- F - Fission Product Barrier – Section 9
- H - Hazards and Other Conditions Affecting Plant Safety – Section 10
- S - System Malfunction – Section 11
- PD - Permanently Defueled Station – Appendix C

Each Recognition Category section contains a matrix listing the ICs and their associated emergency classification levels. These matrices provide the reader with an overview of how the ICs are logically related under each emergency classification level.

The following information and guidance is provided for each IC:

- **Initiating Condition** – Specifies the assigned ECL and states the generic description of the emergency event or condition. It is possible that a generic IC cannot be used because the intent cannot be met (e.g., the IC is incompatible with the plant location or design). The developer will need to clearly document the basis for not incorporating the IC into the site-specific scheme.

- **Operating Mode Applicability** – Lists the modes during which the IC and associated EAL(s) are applicable (i.e., are to be used to classify events or conditions). Note that Permanently Defueled Station and ISFSI IC/EALs have no mode applicability.

- **Example Emergency Action Level(s)** – Provides examples of reports and indications that are considered to meet the intent of the IC. For Recognition Category F, the fission product barrier-based EALs and thresholds are presented in tables applicable to BWRs and PWRs, and arranged by fission product barrier, and the degree of barrier challenge (i.e., potential loss or loss). This presentation method shows the synergism among EALs and thresholds, and supports more accurate dynamic assessments.

  Developers should address each example EAL that applies to their site. When properly developed, the EALs will be unambiguous, expressed in site-specific nomenclature and values, and be readily discernible from Control Room indications. If an example EAL does not apply because the intent cannot be met (e.g., specified instrumentation is not available at the plant), the developer should attempt to specify other available means for identifying entry into the IC.

- **Basis** – Provides background information that explains the intent and application of the IC and EALs. In some cases, the basis also includes relevant source information and references.

- **Developer Notes** - Information that supports the development of the site-specific ICs and EALs. This may include clarifications, references, examples, instructions for calculations, etc. Developer notes need not be included in the site's emergency classification scheme basis document. Developers may elect to include information resulting from a developer note action in a basis section.

- **ECL Assignment Attributes** – This sub-category of the Developer Notes provides a basis as to why the IC was assigned to a particular ECL. This information may or may not be included in the site-specific emergency classification scheme basis document.

3.5 IC AND EAL MODE APPLICABILITY

The following table shows which Recognition Categories are applicable in each plant mode. The ICs and EALs for a given Recognition Category are applicable in the indicated modes.

MODE APPLICABILITY MATRIX

	Recognition Category						
Mode	**A**	**C**	**E**	**F**	**H**	**PD**	**S**
Power Operations	X		X	X	X		X
Startup	X		X	X	X		X
Hot Standby	X		X	X	X		X
Hot Shutdown	X		X	X	X		X
Cold Shutdown	X	X	X		X		
Refueling	X	X	X		X		
Defueled (see below)	X	X	X		X		
Permanently Defueled			X			X	

Typical BWR Operating Modes

Power Operations (1):	Mode Switch in Run
Startup (2):	Mode Switch in Startup/Hot Standby or Refuel (with all vessel head bolts fully tensioned)
Hot Shutdown (3):	Mode Switch in Shutdown, Average Reactor Coolant Temperature >200 °F
Cold Shutdown (4):	Mode Switch in Shutdown, Average Reactor Coolant Temperature ≤ 200 °F
Refueling (5):	Mode Switch in Shutdown or Refuel, and one or more vessel head bolts less than fully tensioned.

Typical PWR Operating Modes

Power Operations (1):	Reactor Power > 5%, Keff ≥ 0.99
Startup (2):	Reactor Power ≤ 5%, Keff ≥ 0.99
Hot Standby (3):	RCS ≥ 350 °F, Keff < 0.99
Hot Shutdown (4):	200 °F < RCS < 350 °F, Keff < 0.99
Cold Shutdown (5):	RCS < 200 °F, Keff < 0.99
Refueling (6):	One or more vessel head closure bolts less than fully tensioned

Developers will need to incorporate the mode criteria from unit-specific Technical Specifications into their emergency classification scheme. In addition, the scheme must also include the following mode designation specific to NEI 99-01:

Defueled (None):	All fuel removed from the reactor vessel (i.e., full core offload during refueling or extended outage).

4 SITE-SPECIFIC SCHEME DEVELOPMENT GUIDANCE

This section provides detailed guidance for developing a site-specific emergency classification scheme. Conceptually, the approach discussed here mirrors the approach used to prepare emergency operating procedures – generic material prepared by reactor vendor owners groups is converted by each nuclear power plant into site-specific emergency operating procedures. Likewise, the emergency classification scheme developer will use the generic guidance in NEI 99-01 to prepare a site-specific emergency classification scheme and the associated basis document.

It is important that the NEI 99-01 emergency classification scheme be implemented as an integrated package. Selected use of portions of this guidance is strongly discouraged as it will lead to an inconsistent or incomplete emergency classification scheme that will likely not receive the necessary regulatory approval.

4.1 GENERAL IMPLEMENTATION GUIDANCE

The guidance in NEI 99-01 is not intended to be applied to plants "as-is"; however, developers should attempt to keep their site-specific schemes as close to the generic guidance as possible. The goal is to meet the intent of the generic Initiating Conditions (ICs) and Emergency Action Levels (EALs) within the context of site-specific characteristics – locale, plant design, operating features, terminology, etc. Meeting this goal will result in a shorter and less cumbersome NRC review and approval process, closer alignment with the schemes of other nuclear power plant sites and better positioning to adopt future industry-wide scheme enhancements.

As discussed in Section 3, the generic guidance includes ICs and example EALs. It is the intent of this guidance that both be included in site-specific documents as each serves a specific purpose. The IC is the fundamental event or condition requiring a declaration. The EAL(s) is the pre-determined threshold that defines when the IC is met. If some feature of the plant location or design is not compatible with a generic IC or EAL, efforts should be made to identify an alternate IC or EAL.

If an IC or EAL includes an explicit reference to a mode dependent technical specification limit that is not applicable to the plant, then that IC and/or EAL need not be included in the site-specific scheme. In these cases, developers must provide adequate documentation to justify why the IC and/or EAL were not incorporated (i.e., sufficient detail to allow a third party to understand the decision not to incorporate the generic guidance).

For sites with more than one unit, consideration must be given to how events or conditions involving shared safety systems may affect more than one unit, and whether or not this should be a factor in an EAL that escalates the emergency classification level.

Useful acronyms and abbreviations associated with the NEI 99-01 emergency classification scheme are presented in Appendix A, Acronyms and Abbreviations. Site-specific entries may be added if necessary.

Many words or terms used in the NEI 99-01 emergency classification scheme have scheme-specific definitions. These words and terms are identified by being set in all capital letters (i.e.,

ALL CAPS). The definitions are presented in Appendix B, Definitions.

Below are examples of acceptable modifications to the generic guidance. These may be incorporated depending upon site user preferences.

- The ICs within a Recognition Category may be placed in reverse order for presentation purposes (e.g., start with a General Emergency at the left/top of a user aid, followed by Site Area Emergency, Alert and NOUE).
- The Initiating Condition numbering may be changed.
- The first letter of a Recognition Category designation may be changed, as follows, provided the change is carried through for all of the associated IC identifiers.
  - R may be used in lieu of A
  - M may be used in lieu of S

  For example, the Abnormal Radiation Levels / Radiological Effluent category designator "A" (for Abnormal) may be changed to "R" (for Radiation). This means that the associated ICs would be changed to RU1, RU2, RA1, etc.
- The ICs and EALs from Recognition Categories S and C may be incorporated into a common presentation method (e.g., one table) provided that all related notes and mode applicability requirements are maintained.
- The ICs and EALs for Emergency Director judgment and security-related events may be placed under separate Recognition Categories.
- The terms EAL and threshold may be used interchangeably.

The material in the Developer Notes section is included to assist developers with crafting correct IC and EAL statements. This material is not required to be in the final emergency classification scheme basis document.

4.2 CRITICAL CHARACTERISTICS

As discussed above, developers are encouraged to keep their site-specific schemes as close to the generic guidance as possible. When crafting the scheme, developers should satisfy themselves that certain critical characteristics have been met. These critical characteristics are listed below.

- The ICs, EALs, Operating Mode Applicability criteria, Notes and Basis information are consistent with industry guidance; while the actual wording may be different, the classification intent is maintained.
- The ICs, EALs, Operating Mode Applicability criteria, Notes and Basis information are technically complete and accurate (i.e., they contain the information necessary to make a correct classification).
- EAL statements use objective criteria and observable values.
- ICs, EALs, Operating Mode Applicability and Note statements and formatting consider human factors and are user-friendly.
- The scheme facilitates classification upgrading and downgrading.
- A classification upgrade will be made only when there is an increasing threat to public health and safety.
- The scheme facilitates classification of multiple concurrent events or conditions.

4.3 PRESENTATION OF SCHEME INFORMATION FOR USERS

The US Nuclear Regulatory Commission (NRC) expects licensees to establish and maintain the capability to assess, classify and declare an emergency condition promptly within 15 minutes after the availability of indications to plant operators that an emergency action level has been, or may be, exceeded. When writing an emergency classification procedure and creating related user aids, the developer must determine the presentation method(s) that best supports the end users by facilitating accurate and timely emergency classification. To this end, developers should consider the following points.

- Senior Reactor Operators in the Control Room are the first users of an emergency classification procedure. They may have other time-critical responsibilities during the emergency classification process, and may have little or no assistance in interpreting the ICs and EALs.
- As an emergency situation evolves, members of the Control Room staff are likely to be the first personnel to notice a change in plant conditions. They can assess the changed conditions and, when warranted, recommend a different emergency classification level to the Technical Support Center (TSC) and/or Emergency Operations Facility (EOF).
- Emergency Directors in the TSC and/or EOF will have more opportunity to focus on making an emergency classification, and will probably have advisors from Operations available to help them.

Emergency classification scheme information for end users should be presented in a manner with which the licensed operators are comfortable. Developers must work closely with representatives from the Operations and Operations Training Departments to develop readily usable and easily understood classification tools (e.g., a procedure and related user aids). If necessary, alternate presentations of emergency classification scheme information may be developed for use by Emergency Directors and/or Offsite Response Organization personnel.

As an example of different approaches, a presentation method may involve the use of wall-boards. Two boards might be developed - one with information for power operations, startup and hot conditions, and the other for cold shutdown and refueling conditions. Alternative presentation methods for the Recognition Category F ICs, EALs and thresholds include flow charts, block diagrams, and checklist tables; the developer must ensure that the site-specific alternate method addresses all possible EAL and threshold combinations shown in the Recognition Category F Initiating Condition Matrix.

When providing EALs and user aids, such as wallboards, notes should be kept with each applicable EAL or moved to a common area and referenced by the applicable EAL. The expectation is that notes and other information necessary to classify the event will be on the wallboard, or other site-specific EAL presentation method, so that EAL decision-makers have this information readily available. It is not expected that similar notes be incorporated on EAL wallboards for every EAL; a reference to a Note on the EAL wallboard is acceptable as long as the information is adequately captured on the wallboard and pointed to for each applicable EAL.

4.4 LEVEL OF INTEGRATION OF ICS/EALS WITH PLANT PROCEDURES

A rigorous integration of IC and EAL references into plant operating procedures is not recommended. This approach would greatly increase the administrative controls and workload for maintaining procedures. On the other hand, performance challenges may occur if recognition of meeting an IC or EAL is based solely on the memory of a licensed operator or an Emergency Director, especially during periods of high stress.

Developers should consider placing visual cues (e.g., a step, note, caution, etc.) in plant procedures alerting the reader/user that it is appropriate to consult the site emergency classification procedure. Visual cues could be placed in emergency operating procedures, abnormal operating procedures, alarm response procedures, and normal operating procedures that apply to cold shutdown and refueling modes. As an example, a step, note or caution could be placed at the beginning of an RCS leak abnormal operating procedure that reminds the reader that an emergency classification assessment should be performed.

4.5 BASIS DOCUMENT

A nuclear power plant will be required to prepare and submit an emergency classification scheme basis document as part of the NRC approval process for implementing an NEI 99-01 scheme. The contents of this basis document should include, at a minimum, the following:

- The Emergency Classification Level (ECL) attributes listed in sections 3.1.1 through 3.1.4.
- A site-specific Mode Applicability Matrix and description of operating modes, similar to that presented in section 3.5.
- A discussion of the process for making an emergency classification, similar to that presented in Section 5. This material may be edited as needed to align with site-specific emergency plan and implementing procedure requirements.
- Each Initiating Condition along with the applicable modes; associated EALs, Note(s) and/or thresholds; and the supporting basis information.
- A listing of acronyms and defined terms, similar to that presented in Appendices A and B, respectively. This material may be edited as needed to align with site characteristics.
- Any site-specific background or technical appendices that the developers believe would be useful in explaining or using elements of the emergency classification scheme.

This document has several other useful purposes such as serving as a reference source when making an emergency classification assessment, providing information useful in training, supporting controls for configuration management and explaining an emergency classification to offsite authorities.

Because the information in an emergency classification scheme basis document can affect the performance of an emergency classification (e.g., the Emergency Director refers to it during an event), the NRC staff expects that changes to the document will be evaluated in accordance with the provisions of 10 CFR 50.54(q).

4.6 DEVELOPER AND USER FEEDBACK TO NEI

Questions or comments concerning the material presented in NEI 99-01 should be forwarded to the NEI EP Department staff. Staff members may provide a direct response (e.g., additional clarification or guidance), refer the feedback to the NEI 99-01 task force for a recommendation, coordinate resolution of issues with generic or industry-wide implications and/or take other action as deemed appropriate.

5 GUIDANCE ON MAKING EMERGENCY CLASSIFICATIONS

All Initiating Condition (IC) and Emergency Action Level (EAL) assessments, and resulting classifications are to be based upon VALID indications, reports or conditions. See Appendix B for the definition of VALID.

For ICs and/or EALs that have a stipulated time duration (e.g., 15 minutes, 30 minutes, etc.), the Emergency Director should not wait until the applicable time has elapsed, but should declare the event as soon as it is determined that the condition has exceeded, or will likely exceed, the applicable time. If an ongoing radiological release is detected and the release start time is unknown, it should be assumed that the release duration specified in the IC/EAL has been exceeded, absent data to the contrary.

When assessing an EAL that specifies a time duration for the off-normal condition, the "clock" for the EAL time duration runs concurrently with emergency classification process "clock". For a full discussion of this timing requirement, refer to NSIR/DPR-ISG-01, Interim Staff Guidance, Emergency Planning for Nuclear Power Plants.

A planned work activity may result in an expected event or condition that meets or exceeds an EAL; however, work planning will include the controls necessary to ensure compliance with all aspects of the operating license. Events or conditions associated with planned evolutions to test, manipulate, repair, or perform maintenance or modifications to systems and equipment that result in an EAL being met or exceeded do not warrant an emergency classification provided that the evolution proceeds as planned, and the plant remains within the limits imposed by the operating license. These events or conditions may be subject to the reporting requirements of 10 § CFR 50.72.

5.1 CLASSIFICATION METHODOLOGY

The EALs[2] specify the pre-determined, site-specific, observable thresholds for an IC that place the plant in a given Emergency Classification Level (ECL). To make an emergency classification, the user will compare an event or condition (i.e., the relevant plant indications and reports) to an EAL(s) and determine if the EAL has been met or exceeded. If it has, then the IC is considered met and the associated ECL is declared in accordance with plant procedures.

While the EALs have been developed to address a full spectrum of possible events and conditions which may warrant emergency classification, a provision for classification based on operator/management experience and judgment is still necessary. The NEI 99-01 scheme provides the Emergency Director with the ability to classify events and conditions based upon judgment using EALs that are consistent with the ECL definitions (refer to Category H). The Emergency Director will need to determine if the effects or consequences of the event or condition reasonably meet or exceed a particular ECL definition. A similar provision is incorporated into the Fission Product Barrier Tables; judgment may be used to determine the status of a fission product barrier.

[2] When making an emergency classification, the Emergency Director should consider all information having a bearing on the assessment of an EAL/threshold. This includes the EAL/threshold itself along with any notes, the operating mode applicability and the informing basis information. While the discussion in this section refers to EALs, the reader should keep in mind that an EAL/threshold includes these other elements as well.

NRC staff expectations concerning timely emergency declaration are discussed in NSIR/DPR-ISG-01, Interim Staff Guidance, Emergency Planning for Nuclear Power Plants.

5.2 CLASSIFICATION OF MULTIPLE EVENTS AND CONDITIONS

When multiple emergency events or conditions are present, the user will identify all met or exceeded EALs. The highest applicable ECL identified during this review is declared.

- If an Alert EAL and a Site Area Emergency EAL are met, declare a Site Area Emergency.

There is no "additive" effect from multiple EALs meeting the same ECL. For example:

- If two Alert EALs are met, declare an Alert.

Related guidance concerning classification of rapidly escalating events or conditions is provided in Regulatory Issue Summary (RIS) 2007-02, *Clarification of NRC Guidance for Emergency Notifications During Quickly Changing Events*.

5.3 CONSIDERATION OF MODE CHANGES DURING CLASSIFICATION

The mode in effect at the time that an event or condition occurred, and prior to any plant or operator response, is the mode that determines if an IC is applicable. If an event or condition occurs, and results in a mode change before the emergency is declared, the emergency classification level is still based on the mode that existed at the time that the event or condition was initiated (and not when it was declared). Once a different mode is reached, any new event or condition, not related to the original event or condition, requiring emergency classification should be evaluated against the ICs and EALs applicable to the operating mode at the time of the new event or condition.

For events that occur in Cold Shutdown or Refueling, escalation is via EALs that are applicable in the Cold Shutdown or Refueling modes, even if Hot Shutdown (or a higher mode) is entered during the subsequent plant response. In particular, the fission product barrier EALs are applicable only to events that initiate in the Hot Shutdown mode or higher.

5.4 CLASSIFICATION OF IMMINENT CONDITIONS

Although EALs provide specific thresholds, the Emergency Director must remain alert to events or conditions that could lead to the conclusion that exceeding an EAL is IMMINENT. If, in the judgment of the Emergency Director, meeting an EAL is IMMINENT, the emergency classification should be made as if the EAL has been exceeded. While applicable to all emergency classification levels, this approach is particularly important at the higher emergency classification levels since it provides additional time for implementation of protective measures.

5.5 EMERGENCY CLASSIFICATION LEVEL UPGRADING AND DOWNGRADING

As noted above, guidance concerning classification of rapidly escalating events or conditions is provided in RIS 2007-02.

Emergency classification level upgrading for multi-unit stations with shared safety systems and functions must also consider the effects of a loss of a common system on more than one unit. For example, a two-unit station may have control panels for both units in close proximity to one another within the same room. Thus, an event requiring Control Room evacuation would most likely affect both units. There are a number of other systems and functions that may be shared at any given multi-unit station. This must be considered in the emergency classification level assessment.

An ECL may be downgraded when the event or condition that meets the highest IC and EAL no longer exists, and other site-specific downgrading requirements are met. If downgrading the ECL is deemed appropriate, the new ECL would then be based on a lower applicable IC(s) and EAL(s). The ECL may also simply be terminated. The following approach to downgrading or terminating an ECL is recommended.

ECL	Action When Condition No Longer Exists
Unusual Event	Terminate the emergency in accordance with plant procedures.
Alert	Downgrade or terminate the emergency in accordance with plant procedures.
Site Area Emergency with no long-term plant damage	Downgrade or terminate the emergency in accordance with plant procedures.
Site Area Emergency with long-term plant damage	Terminate the emergency and enter recovery in accordance with plant procedures.
General Emergency	Terminate the emergency and enter recovery in accordance with plant procedures.

5.6 CLASSIFYING TRANSIENT EVENTS AND CONDITIONS

Many of the ICs and/or EALs contained in this document employ time-based criteria. These criteria will require that the IC/EAL conditions be present for a defined period of time before an emergency classification is warranted. In cases where no time-based criterion is specified, it is recognized that some transient events may cause an EAL to be met for a brief period of time (e.g., a few seconds to a few minutes). The following guidance should be applied to the classification of these events.

<u>EAL momentarily met during expected plant response</u> - In instances where an EAL is briefly met during an expected (normal) plant response, an emergency declaration is not warranted provided that associated systems and components are operating as expected, and relevant operator actions are appropriate.

<u>EAL met but the condition is corrected prior to an emergency declaration</u> – If an operator takes prompt corrective action, and the action is successful in correcting the condition prior to the emergency declaration, then the applicable EAL is not considered met and the associated emergency declaration is not required. For illustrative purposes, 2 examples are provided below.

- A LOCA inside containment is in progress with one train of containment depressurization equipment is out-of-service for maintenance. Containment pressure increases to the containment depressurization equipment actuation setpoint; however, the second train of equipment does not automatically start (a containment potential loss). If an operator manually starts the equipment in accordance with an EOP step prior to an upgraded emergency declaration, then the classification upgrade is not required.

- At ATWS occurs and the auxiliary feedwater system fails to automatically start. Steam generator levels fall and the plant enters an inadequate RCS heat removal condition (a fuel clad and RCS potential loss). If an operator manually starts the auxiliary feedwater system in accordance with an EOP step prior to an emergency declaration, then the classification should be based on the ATWS only.

It is important to stress that the 15-minute emergency classification assessment period is not a "grace period" during which a classification may be delayed to allow the performance of a corrective action that would obviate the need to classify the event; emergency classification assessments must be deliberate and timely, with no undue delays. The provision discussed above addresses only those rapidly evolving situations where an operator is able to take a successful corrective action prior to the Emergency Director completing the review and steps necessary to make the emergency declaration. This provision is included to ensure that any public protective actions resulting from the emergency classification are truly warranted by the plant conditions.

The appropriate OROs and the NRC should be advised about the brief higher level emergency condition and the steps that were taken to correct it. In either of the above cases, if the emergency declaration was made before the corrective action was taken, then the emergency classification level may be downgraded at a later time in accordance with the site emergency plan and implementing procedures.

<u>EAL met but the emergency classification was not made at the time of the event or condition</u> - This situation occurs when personnel discover that an event or condition existed which met an EAL, but no emergency was declared, and the event or condition no longer exists at the time of discovery. This may be due to the event or condition not being recognized at the time or an error that was made in the emergency classification process. In these cases, the guidance contained in NUREG-1022 is applicable. Specifically, the event should be reported to the NRC in accordance with 10 CFR § 50.72 within one hour of the discovery of the undeclared event or condition, and notification made to State and local emergency response organizations accordance with the arrangements established between the licensee and offsite organizations.

6 ABNORMAL RAD LEVELS / RADIOLOGICAL EFFLUENT ICS/EALS

Table A-1: Recognition Category "A" Initiating Condition Matrix

UNUSUAL EVENT	ALERT	SITE AREA EMERGENCY	GENERAL EMERGENCY
AU1 Radioactivity release greater than 2 times the (site-specific effluent release controlling document) limits for 60 minutes or longer. *Op.* Modes*: All*	**AA1** Offsite dose greater than 10 mrem TEDE or 50 mrem thyroid CDE. *Op.* Modes*: All*	**AS1** Offsite dose greater than 100 mrem TEDE or 500 mrem thyroid CDE. *Op.* Modes*: All*	**AG1** Offsite dose greater than 1,000 mrem TEDE or 5,000 mrem thyroid CDE. *Op. Modes: All*
AU2 UNPLANNED loss of water level covering irradiated fuel. *Op. Modes: All*	**AA2** Irradiated fuel is uncovered or damaged outside the reactor vessel. *Op.* Modes*: All*		
	AA3 Radiation level that impedes required continuous occupancy. *Op.* Modes*: All*		

Table intended for use by EAL developers. Inclusion in licensee documents is not required.

AU1

Initiating Condition - NOTIFICATION OF UNUSUAL EVENT

Radioactivity release greater than 2 times the (site-specific effluent release controlling document) limits for 60 minutes or longer.

Operating Mode Applicability: All

Example Emergency Action Levels: (1 or 2 or 3)

Notes:

- The Emergency Director should declare the emergency promptly upon determining that the applicable time has been exceeded, or will likely be exceeded.
- In the absence of data to the contrary, assume that the release duration has exceeded the applicable time if an ongoing release is detected and the release start time is unknown.
- If the associated release path to the environment has been isolated, the effluent monitor reading is no longer VALID for classification purposes.

(1) Reading on **ANY** effluent radiation monitor greater than (2 times the site-specific effluent controlling document limits) for 60 minutes or longer:

(site-specific monitor list and threshold values corresponding to 2 times the controlling document limits)

(2) Reading on **ANY** effluent radiation monitor greater than 2 times the alarm setpoint established by a current radioactivity discharge permit for 60 minutes or longer.

(3) Confirmed sample analysis for a gaseous or liquid release indicates a concentration or release rate greater than 2 times (site-specific effluent release controlling document limits) for 60 minutes or longer.

Basis:

This IC addresses a potential decrease in the level of safety of the plant as indicated by a low-level radiological release that exceeds regulatory commitments for an extended period of time (e.g., an uncontrolled release). It includes any radiological release, gaseous or liquid, monitored or un-monitored, including those for which a radioactivity discharge permit is normally prepared.

Nuclear power plants incorporate design features intended to control the release of radioactive effluents to the environment. Further, there are administrative controls established to prevent unintentional releases, and to control and monitor intentional releases. The occurrence of an extended, uncontrolled radioactive release to the environment is indicative of degradation in these features and/or controls.

The effluent EALs are also included to provide a basis for classifying events that cannot be readily classified on the basis of plant conditions alone. The inclusion of both types of EALs more fully addresses the spectrum of possible events and conditions.

Classification based on effluent monitor readings assumes that a release path to the environment is established. If the associated release path to the environment has been isolated, the effluent monitor reading is no longer VALID for emergency classification purposes.

Releases should not be prorated or averaged. For example, a release exceeding 4 times release limits for 30 minutes does not meet the EAL.

EAL #1 - This EAL addresses normally occurring continuous radioactivity releases from monitored gaseous or liquid effluent pathways.

EAL #2 - This EAL addresses radioactivity releases that cause effluent radiation monitor readings to exceed 2 times the limit established by a radioactivity discharge permit. This EAL is associated with planned batch releases from non-continuous release pathways (e.g., radwaste, waste gas).

EAL #3 - This EAL addresses uncontrolled gaseous or liquid releases that are detected by sample analyses or environmental surveys, particularly on unmonitored pathways (e.g., spills of radioactive liquids into storm drains, heat exchanger leakage in river water systems, etc.).

ECL Assignment Attributes: 3.1.1.B

Developer Notes:

In EAL #1, the "site-specific monitor list" should include the effluent monitors described in the RETS or ODCM.

The "controlling document" referenced above is the Radiological Effluent Technical Specifications (RETS) or, for plants that have implemented Generic Letter 89-01[3], the Offsite Dose Calculation Manual (ODCM). As appropriate, the RETS or ODCM methodology should be used for establishing the monitor thresholds for this IC. In particular, the effluent monitors to be included should be those addressed in the RETS or ODCM.

Some sites may find it advantageous to address gaseous and liquid releases with separate EALs.

Radiation monitor readings should reflect values that correspond to a radiological release exceeding 2 times a release control limit. The controlling document typically describes methodologies for determining effluent radiation monitor setpoints; these methodologies should be used to determine EAL values.

For EAL #2 - Values in this EAL should be 2 times the setpoint established by the release controlling document to warn of a release that is not in compliance with the specified limits. Indexing the EAL to the controlling document setpoints in this manner ensures that the EAL will not be less than the setpoint established by a specific discharge permit.

[3] *Implementation of Programmatic Controls for Radiological Effluent Technical Specifications in the Administrative Controls Section of the Technical Specifications and the Relocation of Procedural Details of RETS to the Offsite Dose Calculation Manual or to the Process Control Program*

It is recognized that some effluent radiation monitors may be off-scale high during the condition described by this IC (i.e., the monitor cannot detect or readout a value greater than 2 times the limit). In those cases, EAL values should be determined with a margin sufficient to ensure that accurate monitor reading is available. For example, an EAL monitor reading might be set at 90% to 95% of the highest accurate monitor reading.

Indications from a real-time dose projection system are not included in the generic EALs. Many licensees do not have this capability. For those that do, the capability may not be within the scope of the plant Technical Specifications. A licensee may request to include an EAL using real-time dose projection system results; approval may be granted on a case-by-case basis.

Indications from a perimeter monitoring system are not included in the generic EALs. Many licensees do not have this capability. For those that do, these monitors may not be controlled and maintained to the same level as plant equipment, or within the scope of the plant Technical Specifications. In addition, readings may be influenced by environmental or other factors. A licensee may request to include an EAL using a perimeter monitoring system; approval may be granted on a case-by-case basis.

AU2

Initiating Condition - NOTIFICATION OF UNUSUAL EVENT

UNPLANNED loss of water level covering irradiated fuel.

Operating Mode Applicability: All

Example Emergency Action Levels:

(1) a. UNPLANNED water level drop in the REFUELING PATHWAY as indicated by ANY of the following:

(site-specific level indications).

AND

b. UNPLANNED rise in area radiation levels as indicated by **ANY** of the following radiation monitors.

(site-specific list of area radiation monitors)

Basis:

This IC addresses a decrease in water level above irradiated fuel, outside the reactor vessel, sufficient to cause elevated radiation levels. This condition could be a precursor to a more serious event and is also indicative of a minor loss in the ability to control radiation levels within the plant. It is therefore a potential degradation in the level of safety of the plant.

A water level decrease will be primarily determined by indications from available level instrumentation. Other sources of level indications include reports from plant personnel (e.g., from a refueling crew) or video camera observations (if available).

A significant drop in the water level above irradiated fuel will cause an increase in adjacent area radiation levels. Increases in area radiation levels may be detected by radiation monitors.

The effects of planned evolutions should be considered. For example, a refueling bridge area radiation monitor reading may increase due to planned evolutions such as lifting of the reactor vessel head or movement of a fuel assembly. Note that this EAL is applicable only in cases where the elevated reading is due to an "UNPLANNED loss of water level".

The Recognition Category C ICs are used to classify a drop in water level above irradiated fuel within the reactor vessel during the Cold Shutdown, Refueling and Defueled modes.

This event escalates to an Alert per AA2 if irradiated fuel outside the reactor vessel is uncovered or damaged.

ECL Assignment Attributes: 3.1.1.A and 3.1.1.B

Developer Notes:

The "site-specific level indications" are those indications that may be used to monitor water level in the various portions of the REFUELING PATHWAY. Specify the mode applicability of a particular indication if it is not available in all modes.

The "site-specific list of area radiation monitors" should contain those area radiation monitors that would be expected to have increased readings following a decrease in water level in the site-specific reactor refueling pathway. In cases where a radiation monitor(s) is not available or would not provide a useful indication, consideration should be given to including alternate indications such as UNPLANNED changes in tank and/or sump levels.

AA1

Initiating Condition - ALERT

Offsite dose greater than 10 mrem TEDE or 50 mrem thyroid CDE.

Operating Mode Applicability: All

Example Emergency Action Levels: (1 or 2 or 3)

Notes:

- The Emergency Director should declare the emergency promptly upon determining that the applicable time has been exceeded, or will likely be exceeded.
- In the absence of data to the contrary, assume that the release duration has exceeded the applicable time if an ongoing release is detected and the release start time is unknown.
- If the associated release path to the environment has been isolated, the effluent monitor reading is no longer VALID for classification purposes.

(1) Reading on ANY of the following radiation monitors greater than the reading shown for 15 minutes or longer:

(site-specific monitor list and threshold values)

(2) Dose assessment using actual meteorology indicates doses greater than 10 mrem TEDE or 50 mrem thyroid CDE at or beyond (site-specific dose receptor point).

(3) Field survey results indicate **EITHER** of the following at or beyond (site-specific dose receptor point):

- Closed window dose rates greater than 10 mR/hr expected to continue for 60 minutes or longer.
- Analyses of field survey samples indicate thyroid CDE greater than 50 mrem for one hour of inhalation.

Basis:

This IC addresses a release of radioactivity that results in projected or actual doses at or beyond the site boundary greater than or equal to 1% of the EPA Protective Action Guides (PAGs). Releases of this magnitude represent an actual or potential substantial degradation of the level of safety of the plant as indicated by a radiological release that significantly exceeds regulatory limits (e.g., a significant uncontrolled release). The pre-calculated effluent monitor values presented in EAL #1 should be used for emergency classification assessments until dose assessment results are available.

This IC includes events or conditions involving a radiological release, whether gaseous or liquid, monitored or un-monitored. The effluent EALs are also included to provide a basis for classifying events that cannot be readily classified on the basis of plant conditions alone. The inclusion of both types of EALs more fully addresses the spectrum of possible events and

conditions.

The TEDE dose is set at 1% of the EPA PAG of 1,000 mrem while the 50 mrem thyroid CDE was established in consideration of the 1:5 ratio of the EPA PAG for TEDE and thyroid CDE.

Classification based on effluent monitor readings assumes that a release path to the environment is established. If the associated release path to the environment has been isolated, the effluent monitor reading is no longer VALID for emergency classification purposes.

ECL Assignment Attributes: 3.1.2.C

Developer Notes:

The effluent EALs are included to provide a basis for classifying events that cannot be readily classified on the basis of plant conditions alone. The inclusion of both types of EALs more fully addresses the spectrum of possible events and accidents.

The EPA PAGs are expressed in terms of the sum of the effective dose equivalent (EDE) and the committed effective dose equivalent (CEDE), or as the thyroid committed dose equivalent (CDE). For the purpose of these IC/EALs, the dose quantity total effective dose equivalent (TEDE), as defined in 10 CFR § 20, is used in lieu of "…sum of EDE and CEDE.…".

The EPA PAG guidance provides for the use adult thyroid dose conversion factors; however, some states have decided to base protective actions on child thyroid CDE. Nuclear power plant ICs/EALs need to be consistent with the protective action methodologies employed by the States within their EPZs. The thyroid CDE dose used in the IC and EALs should be adjusted as necessary to align with State protective action decision-making criteria.

The "site-specific monitor list and threshold values" should be determined with consideration of the following:

- Include the effluent monitors described in emergency plan and emergency dose assessment procedures.
- The effluent monitor readings should correspond to a dose of 10 mrem TEDE or 50 mrem thyroid CDE at the "site-specific dose receptor point" (as discussed below).
- Monitor readings will be calculated using a set of assumed meteorological data or atmospheric dispersion factors; the data or factors selected for use should be the same as those employed to calculate the monitor readings for ICs AS1 and AG1.
- The calculation of monitor readings will also require use of an assumed release isotopic mix; the selected mix should be the same as that employed to calculate monitor readings for ICs AS1 and AG1.

The "site-specific dose receptor point" is the distance(s) and/or locations used by the licensee to distinguish between on-site and offsite doses. The selected distance(s) and/or locations should reflect the content of the emergency plan, and the procedural methodology used to determine offsite doses and Protective Action Recommendations. This is typically the boundary of the OWNER CONTROLLED AREA; however, some sites may use a different boundary criterion.

It is recognized that some effluent radiation monitors may be off-scale high during the condition

described by this IC. In those cases, EAL values should be determined with a margin sufficient to ensure that accurate monitor reading is available. For example, an EAL monitor reading might be set at 90% to 95% of the highest accurate monitor reading.

Although the IC references TEDE, field survey results are generally available only as a "whole body" dose rate. For this reason, the field survey EAL specifies a "closed window" survey reading.

Indications from a real-time dose projection system are not included in the generic EALs. Many licensees do not have this capability. For those that do, the capability may not be within the scope of the plant Technical Specifications. A licensee may request to include an EAL using real-time dose projection system results; approval may be granted on a case-by-case basis.

Indications from a perimeter monitoring system are not included in the generic EALs. Many licensees do not have this capability. For those that do, these monitors may not be controlled and maintained to the same level as plant equipment, or within the scope of the plant Technical Specifications. In addition, readings may be influenced by environmental or other factors. A licensee may request to include an EAL using a perimeter monitoring system; approval may be granted on a case-by-case basis.

AA2

Initiating Condition - ALERT

Irradiated fuel is uncovered or damaged outside the reactor vessel.

Operating Mode Applicability: All

Example Emergency Action Levels: (1 or 2)

(1) Uncovery of irradiated fuel in the REFUELING PATHWAY for 15 minutes or longer.

(2) Damage to irradiated fuel resulting in a release of radioactivity as indicated by **ANY** of the following radiation monitors:

(site-specific listing of radiation monitors, and the associated readings, setpoints and/or alarms)

Basis:

This IC addresses events that have caused uncovery of, or damage to, an irradiated fuel assembly. These events present safety challenges to plant personnel and are precursors to a release of radioactivity to the environment. As such, they represent an actual or potential substantial degradation of the level of safety of the plant.

This IC applies to irradiated fuel assemblies requiring water cooling and is not intended to apply to fuel which is licensed for dry storage.

Escalation of this emergency classification level, if appropriate, would be based on ICs AS1 or AG1.

<u>EAL #1</u>

This EAL escalates from AU2 in that the loss of level, in the affected portion of the refueling pathway, is of sufficient magnitude to have caused uncovery of irradiated fuel. The EAL is applicable to events affecting irradiated fuel outside the reactor vessel. The Recognition Category C ICs are used to classify a drop in water level above irradiated fuel within the reactor vessel during the Cold Shutdown, Refueling and Defueled modes.

Indications of irradiated fuel uncovery may include direct or indirect visual observation (e.g., reports from personnel or camera images), as well as significant changes in water and radiation levels, or other plant parameters. Computational aids may also be used (e.g., a boil-off curve). Classification of an event using this EAL should be based on the totality of available indications, reports and observations.

While an area radiation monitor could detect an increase in a dose rate due to a lowering of water level in some portion of the refueling pathway, the reading may not be a reliable indication of whether or not the fuel is actually uncovered. To the degree possible, readings should be considered in combination with other available indications of inventory loss.

The 15-minute threshold duration allows sufficient time for prompt operator actions to restore water level over the irradiated fuel, if possible. If actions have been successful in causing level to rise during the 15-minute period (i.e., the irradiated fuel is still uncovered but water level is now rising such that covering will occur shortly), then EAL #1 is not applicable and no emergency classification under this IC is warranted.

EAL #2

This EAL addresses damage to irradiated fuel. Such events may include the dropping, bumping or binding of an assembly, or dropping a heavy load onto an assembly. A rise in readings on radiation monitors should be considered in conjunction with in-plant reports or observations of a potential fuel damaging event (e.g., a fuel handling accident).

ECL Assignment Attributes: 3.1.2.B and 3.1.2.C

Developer Notes:

Depending upon the availability and range of instrumentation, this EAL may include specific readings indicative of fuel uncovery; consider water, tank, sump and radiation level readings.

If radiation monitors will be specified, developers should list the monitors that could be used to detect uncovery of irradiated fuel, and specify the appropriate monitor readings, setpoints and/or alarms. It is recognized that some monitors may be off-scale high during conditions in which a fuel assembly is uncovered. In those cases, EAL values should be determined with a margin sufficient to ensure that accurate monitor reading is available. For example, an EAL monitor reading might be set at 90% to 95% of the highest accurate monitor reading.

To further promote accurate classification, developers should determine if some combination of monitors could be specified in the EAL to build-in an appropriate level of corroboration between monitor readings into the classification assessment.

For EAL #2 - The “site-specific listing of radiation monitors, and the associated readings, setpoints and/or alarms” should contain those radiation monitors that could be used to identify damage to an irradiated fuel assembly (e.g., confirmatory of a release of fission product gases from irradiated fuel).

AA3

Initiating Condition -- ALERT

Radiation level that impedes required continuous occupancy.

Operating Mode Applicability: All

Example Emergency Action Levels:

(1) Dose rate greater than 15 mR/hr in **ANY** of the following areas:

(site-specific area list)

Basis:

This IC addresses increased radiation levels that may impact continued operation in areas requiring continuous occupancy to maintain safe operation or to perform a safe shutdown. To the extent that one of these areas cannot be staffed, there has been an actual or potential substantial degradation of the level of safety of the plant. The Emergency Director must consider the source or cause of the increased radiation levels and determine if another IC may be applicable.

The value of 15mR/hr is derived from the GDC 19 value of 5 rem in 30 days with adjustment for expected occupancy times. Although Section III.D.3 of NUREG-0737, "Clarification of TMI Action Plan Requirements", provides that the 15 mR/hr value can be averaged over the 30 days, the value is used here without averaging, as a 30-day duration implies an event potentially more significant than an Alert.

ECL Assignment Attributes: 3.1.2.C

Developer Notes:

The “site-specific area list” should include any areas requiring <u>continuous</u> occupancy to maintain safe operation, or to perform a safe cooldown and shutdown. Areas requiring continuous occupancy include, at a minimum, the Control Room(s) and the Central Alarm Station (CAS).

At multiple-unit sites, an accident at one unit may cause an Alert to be declared at another unit based on this IC. For example, accident conditions at one unit may cause elevated radiation levels within another unit (e.g., radiation levels due to release or deposition “shine”).

AS1

Initiating Condition -- SITE AREA EMERGENCY

Offsite dose greater than 100 mrem TEDE or 500 mrem thyroid CDE.

Operating Mode Applicability: All

Example Emergency Action Levels: (1 or 2 or 3)

Notes:

- The Emergency Director should declare the emergency promptly upon determining that the applicable time has been exceeded, or will likely be exceeded.
- In the absence of data to the contrary, assume that the release duration has exceeded the applicable time if an ongoing release is detected and the release start time is unknown.
- If the associated release path to the environment has been isolated, the effluent monitor reading is no longer VALID for classification purposes.

(1) Reading on ANY of the following radiation monitors greater than the reading shown for 15 minutes or longer:

(site-specific monitor list and threshold values)

(2) Dose assessment using actual meteorology indicates doses greater than 100 mrem TEDE or 500 mrem thyroid CDE at or beyond (site-specific dose receptor point).

(3) Field survey results indicate **EITHER** of the following at or beyond (site-specific dose receptor point):

- Closed window dose rates greater than 100 mR/hr expected to continue for 60 minutes or longer.
- Analyses of field survey samples indicate thyroid CDE greater than 500 mrem for one hour of inhalation.

Basis:

This IC addresses a release of radioactivity that results in projected or actual doses at or beyond the site boundary greater than or equal to 10% of the EPA Protective Action Guides (PAGs). Releases of this magnitude are associated with the failure of plant systems needed for the protection of the public. The pre-calculated effluent monitor values presented in EAL #1 should be used for emergency classification assessments until dose assessment results are available.

This IC includes events or conditions involving a radiological release, whether gaseous or liquid, monitored or un-monitored. The effluent EALs are also included to provide a basis for classifying events that cannot be readily classified on the basis of plant conditions alone. The inclusion of both types of EALs more fully addresses the spectrum of possible events and conditions.

The TEDE dose is set at 10% of the EPA PAG of 1,000 mrem while the 500 mrem thyroid CDE was established in consideration of the 1:5 ratio of the EPA PAG for TEDE and thyroid CDE.

Classification based on effluent monitor readings assumes that a release path to the environment is established. If the associated release path to the environment has been isolated, the effluent monitor reading is no longer VALID for emergency classification purposes.

ECL Assignment Attributes: 3.1.3.C

Developer Notes:

The effluent EALs are included to provide a basis for classifying events that cannot be readily classified on the basis of plant conditions alone. The inclusion of both types of EALs more fully addresses the spectrum of possible events and accidents. While this IC could not realistically be met absent challenges to multiple fission product barriers, the IC provides classification diversity and may be used to classify events that would not reach the same ECL based on plant status alone.

The EPA PAGs are expressed in terms of the sum of the effective dose equivalent (EDE) and the committed effective dose equivalent (CEDE), or as the thyroid committed dose equivalent (CDE). For the purpose of these IC/EALs, the dose quantity total effective dose equivalent (TEDE), as defined in 10 CFR § 20, is used in lieu of "…sum of EDE and CEDE.…".

The EPA PAG guidance provides for the use adult thyroid dose conversion factors; however, some states have decided to base protective actions on child thyroid CDE. Nuclear power plant ICs/EALs need to be consistent with the protective action methodologies employed by the States within their EPZs. The thyroid CDE dose used in the IC and EALs should be adjusted as necessary to align with State protective action decision-making criteria.

The "site-specific monitor list and threshold values" should be determined with consideration of the following:

- Include the effluent monitors described in emergency plan and emergency dose assessment procedures.
- The effluent monitor readings should correspond to a dose of 100 mrem TEDE or 500 mrem thyroid CDE at the "site-specific dose receptor point" (as discussed below).
- Monitor readings will be calculated using a set of assumed meteorological data or atmospheric dispersion factors; the data or factors selected for use should be the same as those employed to calculate the monitor readings for ICs AA1 and AG1.
- The calculation of monitor readings will also require use of an assumed release isotopic mix; the selected mix should be the same as that employed to calculate monitor readings for ICs AA1 and AG1.

The "site-specific dose receptor point" is the distance(s) and/or locations used by the licensee to distinguish between on-site and offsite doses. The selected distance(s) and/or locations should reflect the content of the emergency plan, and the procedural methodology used to determine offsite doses and Protective Action Recommendations. This is typically the boundary of the OWNER CONTROLLED AREA; however, some sites may use a different boundary criterion.

It is recognized that some effluent radiation monitors may be off-scale high during the condition described by this IC. In those cases, EAL values should be determined with a margin sufficient to ensure that accurate monitor reading is available. For example, an EAL monitor reading might be set at 90% to 95% of the highest accurate monitor reading.

Although the IC references TEDE, field survey results are generally available only as a "whole body" dose rate. For this reason, the field survey EAL specifies a "closed window" survey reading.

Indications from a real-time dose projection system are not included in the generic EALs. Many licensees do not have this capability. For those that do, the capability may not be within the scope of the plant Technical Specifications. A licensee may request to include an EAL using real-time dose projection system results; approval may be granted on a case-by-case basis.

Indications from a perimeter monitoring system are not included in the generic EALs. Many licensees do not have this capability. For those that do, these monitors may not be controlled and maintained to the same level as plant equipment, or within the scope of the plant Technical Specifications. In addition, readings may be influenced by environmental or other factors. A licensee may request to include an EAL using a perimeter monitoring system; approval may be granted on a case-by-case basis.

AG1

Initiating Condition -- GENERAL EMERGENCY

Offsite dose greater than 1,000 mrem TEDE or 5,000 mrem thyroid CDE.

Operating Mode Applicability: All

Example Emergency Action Levels: (1 or 2 or 3)

Notes:

- The Emergency Director should declare the emergency promptly upon determining that the applicable time has been exceeded, or will likely be exceeded.
- In the absence of data to the contrary, assume that the release duration has exceeded the applicable time if an ongoing release is detected and the release start time is unknown.
- If the associated release path to the environment has been isolated, the effluent monitor reading is no longer VALID for classification purposes.

(1) Reading on ANY of the following radiation monitors greater than the reading shown for 15 minutes or longer:

(site-specific monitor list and threshold values)

(2) Dose assessment using actual meteorology indicates doses greater than 1,000 mrem TEDE or 5,000 mrem thyroid CDE at or beyond (site-specific dose receptor point).

(3) Field survey results indicate **EITHER** of the following at or beyond (site-specific dose receptor point):

- Closed window dose rates greater than 1,000 mR/hr expected to continue for 60 minutes or longer**.**
- Analyses of field survey samples indicate thyroid CDE greater than 5,000 mrem for one hour of inhalation.

Basis:

This IC addresses a release of radioactivity that results in projected or actual doses at offsite locations greater than or equal to the EPA Protective Action Guides (PAGs). Releases of this magnitude will require implementation of protective actions for the public. The pre-calculated effluent monitor values presented in EAL #1 should be used for emergency classification assessments until dose assessment results are available.

This IC includes events or conditions involving a radiological release, whether gaseous or liquid, monitored or un-monitored. The effluent EALs are also included to provide a basis for classifying events that cannot be readily classified on the basis of plant conditions alone. The inclusion of both types of EALs more fully addresses the spectrum of possible events and conditions.

The TEDE dose is set at the EPA PAG of 1,000 mrem while the 5,000 mrem thyroid CDE was established in consideration of the 1:5 ratio of the EPA PAG for TEDE and thyroid CDE.

Classification based on effluent monitor readings assumes that a release path to the environment is established. If the associated release path to the environment has been isolated, the effluent monitor reading is no longer VALID for emergency classification purposes.

ECL Assignment Attributes: 3.1.4.C

Developer Notes:

The effluent EALs are included to provide a basis for classifying events that cannot be readily classified on the basis of plant conditions alone. The inclusion of both types of EALs more fully addresses the spectrum of possible events and accidents. While this IC could not realistically be met absent challenges to multiple fission product barriers, the IC provides classification diversity and may be used to classify events that would not reach the same ECL based on plant status alone.

The EPA PAGs are expressed in terms of the sum of the effective dose equivalent (EDE) and the committed effective dose equivalent (CEDE), or as the thyroid committed dose equivalent (CDE). For the purpose of these IC/EALs, the dose quantity total effective dose equivalent (TEDE), as defined in 10 CFR § 20, is used in lieu of "…sum of EDE and CEDE.…".

The EPA PAG guidance provides for the use adult thyroid dose conversion factors; however, some states have decided to base protective actions on child thyroid CDE. Nuclear power plant ICs/EALs need to be consistent with the protective action methodologies employed by the States within their EPZs. The thyroid CDE dose used in the IC and EALs should be adjusted as necessary to align with State protective action decision-making criteria.

The "site-specific monitor list and threshold values" should be determined with consideration of the following:

- Include the effluent monitors described in emergency plan and emergency dose assessment procedures.
- The effluent monitor readings should correspond to a dose of 1,000 mrem TEDE or 5,000 mrem thyroid CDE at the "site-specific dose receptor point" (as discussed below).
- Monitor readings will be calculated using a set of assumed meteorological data or atmospheric dispersion factors; the data or factors selected for use should be the same as those employed to calculate the monitor readings for ICs AA1 and AS1.
- The calculation of monitor readings will also require use of an assumed release isotopic mix; the selected mix should be the same as that employed to calculate monitor readings for ICs AA1 and AS1.

The "site-specific dose receptor point" is the distance(s) and/or locations used by the licensee to distinguish between on-site and offsite doses. The selected distance(s) and/or locations should reflect the content of the emergency plan, and procedural methodology used to determine offsite doses and Protective Action Recommendations. This is typically the boundary of the OWNER CONTROLLED AREA; however, some sites may use a different boundary criterion.

It is recognized that some effluent radiation monitors may be off-scale high during the condition described by this IC. In those cases, EAL values should be determined with a margin sufficient to ensure that accurate monitor reading is available. For example, an EAL monitor reading might be set at 90% to 95% of the highest accurate monitor reading.

Although the IC references TEDE, field survey results are generally available only as a "whole body" dose rate. For this reason, the field survey EAL specifies a "closed window" survey reading.

Indications from a real-time dose projection system are not included in the generic EALs. Many licensees do not have this capability. For those that do, the capability may not be within the scope of the plant Technical Specifications. A licensee may request to include an EAL using real-time dose projection system results; approval may be granted on a case-by-case basis.

Indications from a perimeter monitoring system are not included in the generic EALs. Many licensees do not have this capability. For those that do, these monitors may not be controlled and maintained to the same level as plant equipment, or within the scope of the plant Technical Specifications. In addition, readings may be influenced by environmental or other factors. A licensee may request to include an EAL using a perimeter monitoring system; approval may be granted on a case-by-case basis.

7 COLD SHUTDOWN / REFUELING SYSTEM MALFUNCTION ICS/EALS

Table C-1: Recognition Category "C" Initiating Condition Matrix

UNUSUAL EVENT	ALERT	SITE AREA EMERGENCY	GENERAL EMERGENCY
CU1 RCS leakage for 15 minutes or longer. *Op. Modes: Cold Shutdown, Refueling*	**CA1** Loss of (reactor vessel/RCS [*PWR*] or RPV [*BWR*]) inventory. *Op. Modes: Cold Shutdown, Refueling*	**CS1** Loss of (reactor vessel/RCS [*PWR*] or RPV [*BWR*]) inventory affecting core decay heat removal capability. *Op. Modes: Cold Shutdown, Refueling*	**CG1** Loss of (reactor vessel/RCS [*PWR*] or RPV [*BWR*]) inventory affecting fuel clad integrity with containment challenged. *Op. Modes: Cold Shutdown, Refueling*
CU2 AC power capability to emergency busses reduced to a single power source for 15 minutes or longer. *Op. Modes: Cold Shutdown, Refueling, Defueled*	**CA2** Loss of all offsite and all onsite AC power to emergency busses for 15 minutes or longer. *Op. Modes: Cold Shutdown, Refueling, Defueled*		
CU3 UNPLANNED loss of decay heat removal capability. *Op.* Modes*: Cold Shutdown, Refueling*	**CA3** Inability to maintain the plant in cold shutdown. *Op. Modes: Cold Shutdown, Refueling*		
CU4 Loss of required DC power for 15 minutes or longer. *Op. Modes: Cold Shutdown, Refueling*			
CU5 Loss of all onsite or offsite communications capabilities. *Op. Modes: Cold* Shutdown*, Refueling, Defueled*			

Table intended for use by EAL developers. Inclusion in licensee documents is not required.

CU1

Initiating Condition -- NOTIFICATION OF UNUSUAL EVENT

RCS leakage for 15 minutes or longer.

Operating Mode Applicability: Cold Shutdown, Refueling

Example Emergency Action Levels: (1 or 2)

Note: The Emergency Director should declare the emergency promptly upon determining that the applicable time has been exceeded, or will likely be exceeded.

(1) RCS leakage results in (reactor vessel/RCS [*PWR*] or RPV [*BWR*]) level less than the required lower limit for 15 minutes or longer.

(2) a. (Reactor vessel/RCS [*PWR*] or RPV [*BWR*]) level cannot be monitored.

AND

b. UNPLANNED level rise in (site-specific sump and/or tank).

Basis:

This IC addresses the inability to restore and maintain water level to a required level (or the lower limit of a level band), or a loss of the ability to monitor (reactor vessel/RCS [*PWR*] or RPV [*BWR*]) level concurrent with indications of coolant leakage. Either of these conditions is considered to be a potential degradation of the level of safety of the plant.

EAL #1 recognizes that the minimum required (reactor vessel/RCS [*PWR*] or RPV [*BWR*]) level can changes several times during the course of a refueling outage as different plant configurations and system lineups are implemented. This EAL is met if the minimum level, specified for the current plant conditions, cannot be maintained for 15 minutes or longer. The minimum level is typically specified in the applicable operating procedure but may be specified in another controlling document.

Refueling evolutions that decrease RCS water inventory are carefully planned and controlled. An UNPLANNED event that results in water level decreasing below a procedurally required limit warrants the declaration of a NOUE due to the reduced water inventory that is available to keep the core covered.

The 15-minute threshold duration allows sufficient time for prompt operator actions to restore and maintain the expected water level. This criterion excludes transient conditions causing a brief lowering of water level.

EAL #2 addresses a condition where all means to determine (reactor vessel/RCS [*PWR*] or RPV [*BWR*]) level have been lost. In this condition, operators may determine that an inventory loss is occurring by observing changes in sump and/or tank levels. Sump and/or tank level changes must be evaluated against other potential sources of water flow to ensure they are indicative of leakage from the (reactor vessel/RCS [*PWR*] or RPV [*BWR*]).

Continued loss of RCS Inventory may result in escalation to the Alert emergency classification level via either IC CA1 or CA3.

ECL Assignment Attributes: 3.1.1.A

Developer Notes:

EAL #1 – It is recognized that the minimum allowable reactor vessel/RCS/RPV level may have many values over the course of a refueling outage. Developers should solicit input from licensed operators concerning the optimum wording for this EAL statement. In particular, determine if the generic wording is adequate to ensure accurate and timely classification, or if specific setpoints can be included without making the EAL statement unwieldy or potentially inconsistent with actions that may be taken during an outage. If specific setpoints are included, these should be drawn from applicable operating procedures or other controlling documents.

EAL #2.b – Enter any 'site-specific sump and/or tank" that could be expected to rise if there were a loss of RCS/reactor vessel/RPV inventory (i.e., the lost inventory would enter the listed sump or tank).

CU2

Initiating Condition -- NOTIFICATION OF UNUSUAL EVENT

AC power capability to emergency busses reduced to a single power source for 15 minutes or longer.

Operating Mode Applicability: Cold Shutdown, Refueling, Defueled

Example Emergency Action Levels:

Note: The Emergency Director should declare the emergency promptly upon determining that the applicable time has been exceeded, or will likely be exceeded.

(1) AC power capability to (site-specific emergency busses) is reduced to a single power source for 15 minutes or longer.

Basis:

This IC describes a significant degradation of offsite and onsite AC power sources (or the plant power distribution system) such that any additional single failure would result in a loss of all AC emergency busses.

When in the cold shutdown, refueling, or defueled mode, this condition is not classified as an Alert because of the increased time available to restore another power source to service. Additional time is available due to the reduced core decay heat load, and lower temperature and pressure in various plant systems. Thus, in these modes, this condition is considered to be a potential degradation of the level of safety of the plant.

Fifteen minutes was selected as a threshold to exclude transient or momentary losses of power.

Some potential examples of this condition are presented below.

- A loss of all offsite power with a concurrent failure of all but one emergency power source (e.g., an onsite diesel generator).
- A loss of all offsite power and loss of all emergency power sources (e.g., onsite diesel generators) with a single train of emergency busses being back-fed from the unit main generator.
- A loss of emergency power sources (e.g., onsite diesel generators) with a single train of emergency busses being back-fed from an offsite power source.

The subsequent loss of the remaining single power source would escalate the event to an Alert in accordance with IC CA2.

ECL Assignment Attributes: 3.1.1.A

Developer Notes:

Developers should modify the bulleted examples provided in the basis section, above, as needed to reflect their site-specific plant designs and capabilities.

The "site-specific emergency busses" are the busses fed by offsite or emergency AC power sources that supply power to the electrical distribution system that powers safety systems. There is typically 1 emergency buss per train of safety systems.

For a backup power source comprised of two or more generators (e.g., two 50%-capacity generators sized to feed 1 emergency buss), the EAL and/or Basis section must specify that all generators for that source are operating.

The EAL and/or Basis section may specify use of a non-safety-related power source provided that operation of this source is controlled in accordance with abnormal or emergency operating procedures.

At multi-unit stations, the EALs should allow credit for compensatory measures that are proceduralized and can be implemented within 15 minutes. Consider capabilities such as power source cross-ties, "swing" generators, other power sources described in abnormal or emergency operating procedures, etc. Plants that have a proceduralized capability to cross-tie AC power from an offsite power supply of a companion unit may take credit for the redundant power source in the associated EAL for this IC. These stations must also consider the impact of this condition on safety system functions shared between multiple units.

As used above, safety systems are those systems required for safe plant operation, cooling down the unit and placing it in the cold shutdown condition. These systems include the ECCS; on-site emergency AC and DC power sources and distribution systems; and associated support systems necessary for operation.

CU3

Initiating Condition -- NOTIFICATION OF UNUSUAL EVENT

UNPLANNED loss of decay heat removal capability.

Operating Mode Applicability: Cold Shutdown, Refueling

Example Emergency Action Levels: (1 or 2)

Note: The Emergency Director should declare the emergency promptly upon determining that the applicable time has been exceeded, or will likely be exceeded.

(1) UNPLANNED loss of decay heat removal results in RCS temperature greater than the Technical Specification cold shutdown temperature limit.

(2) Loss of **ALL** RCS temperature and reactor vessel/RCS [*PWR*] or RPV [*BWR*] level indication for 15 minutes or longer.

Basis:

An UNPLANNED loss of decay heat removal capability is a potential degradation of the level of safety of the plant.

During refueling, the level in the reactor vessel will normally be maintained above the reactor vessel flange. Refueling evolutions that lower water level below the reactor vessel flange are carefully planned and controlled. A loss of forced decay heat removal at reduced inventory may result in a rapid rise in reactor coolant temperature depending on the time after shutdown.

EAL #1 reflects a condition where decay heat removal capability has been degraded or lost such that reactor coolant temperature cannot be maintained below the cold shutdown temperature limit specified in Technical Specifications. During this condition, there is no immediate threat of fuel damage. The core decay heat load has been reduced since the cessation of power operation and there is a large volume of reactor coolant available to act as a heat sink.

EAL #2 reflects a condition where there has been a significant loss of instrumentation capability necessary to monitor RCS conditions; operators would be unable to monitor key parameters necessary to assure core decay heat removal. Again, the core decay heat load has been reduced since the cessation of power operation and there is a large volume of reactor coolant available to act as a heat sink. There is no immediate threat of fuel damage.

Fifteen minutes was selected as a threshold to exclude transient or momentary losses of indication.

Escalation to Alert would be via IC CA1 based on an inventory loss or IC CA3 based on exceeding configuration-specific time criteria.

ECL Assignment Attributes: 3.1.1.A

Developer Notes:

None

CU4

Initiating Condition -- NOTIFICATION OF UNUSUAL EVENT

Loss of required DC power for 15 minutes or longer.

Operating Mode Applicability: Cold Shutdown, Refueling

Example Emergency Action Levels:

Note: The Emergency Director should declare the emergency promptly upon determining that the applicable time has been exceeded, or will likely be exceeded.

(1) Indicated voltage is less than (site-specific bus voltage value) on (required site-specific Vital DC busses) for 15 minutes or longer.

Basis:

A total loss of DC power would compromise the ability to monitor and control safety systems. When in the cold shutdown, refueling, or defueled mode, this type of event is classified as an Unusual Event because of the significantly reduced core decay heat load, lower temperature and pressure in various systems, and the increased time available to restore one of the vital DC busses to service. Thus, in these modes, this condition is considered to be a potential degradation of the level of safety of the plant.

As used in this IC and EAL, "required" means the DC busses necessary to support operation of the in-service, or operable, train or trains of safety system equipment. For example, if the Train A ECCS is out-of-service for scheduled maintenance work and the Train B ECCS is in-service (operable and ready for use), then the "required" DC busses are those necessary to support operation of the B Train ECCS equipment. A loss of the Train A DC busses would not warrant an emergency classification.

Fifteen minutes was selected as a threshold to exclude transient or momentary power losses.

If this loss results in the inability to maintain cold shutdown, the escalation to an Alert would be in accordance with IC CA3.

ECL Assignment Attributes: 3.1.1.A

Developer Notes:

The "site-specific bus voltage value" should be based on the minimum bus voltage necessary for adequate operation of safety system equipment. This voltage value should incorporate a margin of at least 15 minutes of operation before the onset of inability to operate those loads. This voltage is usually near the minimum voltage selected when battery sizing is performed.

The typical value for an entire battery set is approximately 105 VDC. For a 60 cell string of batteries, the cell voltage is approximately 1.75 Volts per cell. For a 58 string battery set, the minimum voltage is approximately 1.81 Volts per cell.

The “site-specific Vital DC busses” are the DC busses that supply power to the DC electrical distribution system used for safety system monitoring and control.

As used above, safety systems are those systems required for safe plant operation, cooling down the unit and placing it in the cold shutdown condition. These systems include the ECCS; on-site emergency AC and DC power sources and distribution systems; and associated support systems necessary for operation.

CU5

Initiating Condition -- NOTIFICATION OF UNUSUAL EVENT

Loss of all onsite or offsite communications capabilities.

Operating Mode Applicability: Cold Shutdown, Refueling, Defueled

Example Emergency Action Levels: (1 or 2 or 3)

(1) Loss of **ALL** of the following onsite communication methods:

(site-specific list of communications methods)

(2) Loss of **ALL** of the following ORO communications methods:

(site-specific list of communications methods)

(3) Loss of **ALL** of the following NRC communications methods:

(site-specific list of communications methods)

Basis:

This IC recognizes concerns associated with a significant loss of communications capability. While not a direct challenge to plant or personnel safety, this event warrants prompt notifications to OROs and the NRC.

EAL #1 addresses a total loss of the communications methods used in support of routine plant operations.

EAL #2 addresses a total loss of the communications methods used to notify all OROs of an emergency declaration. The OROs referred to here are (see Developer Notes).

EAL #3 addresses a total loss of the communications methods used to notify the NRC of an emergency declaration.

This IC should be assessed only when extraordinary means are being utilized to make communications possible (e.g., relaying of on-site information via individuals or multiple radio transmission points, individuals being sent to offsite locations, etc.).

The inability to notify a single ORO requiring a 15-minute notification does not warrant a declaration provided that communications to another such ORO requiring 15-minute notification is functional.

ECL Assignment Attributes: 3.1.1.C

Developer Notes:

EAL #1 - The “site-specific list of communications methods” should include all communications methods used for routine plant communications (e.g., commercial or site telephones, page-party

systems, radios, etc.). This listing should include installed plant equipment and components, and not items owned and maintained by individuals.

EAL #2 - The "site-specific list of communications methods" should include all communications methods used to perform emergency notifications to OROs as described in the site Emergency Plan. The listing should include installed plant equipment and components, and not items owned and maintained by individuals. Example methods are ring-down/dedicated telephone lines, commercial telephone lines, radios, and internet-based communications technology.

In the Basis section, insert the site-specific listing of the OROs requiring notification of an emergency declaration from the Control Room in accordance with the site Emergency Plan, and typically within 15 minutes.

EAL #3 – The "site-specific list of communications methods" should include all communications methods used to perform emergency notifications to the NRC as described in the site Emergency Plan. The listing should include installed plant equipment and components, and not items owned and maintained by individuals. These methods are typically the dedicated Emergency Notification System (ENS) telephone line and commercial telephone lines.

CA1

Initiating Condition - ALERT

Loss of (reactor vessel/RCS [*PWR*] or RPV [*BWR*]) inventory.

Operating Mode Applicability: Cold Shutdown, Refueling

Example Emergency Action Levels: (1 or 2)

Note: The Emergency Director should declare the emergency promptly upon determining that the applicable time has been exceeded, or will likely be exceeded.

(1) Loss of (reactor vessel/RCS [*PWR*] or RPV [*BWR*]) inventory as indicated by level less than (site-specific level).

(2) a. (Reactor vessel/RCS [*PWR*] or RPV [*BWR*]) level cannot be monitored for 15 minutes or longer

AND

b. UNPLANNED level rise in (site-specific sump and/or tank) due to a loss of (reactor vessel/RCS [*PWR*] or RPV [*BWR*]) inventory.

Basis:

The conditions described by these EALs are precursors to a loss of the ability to adequately cool irradiated fuel (i.e., a precursor to a challenge to the fuel clad barrier). This condition represents a potential substantial reduction in the level of plant safety.

For EAL #1, a lowering of water level below (site-specific EAL point) indicates that operator actions have not been successful in restoring and maintaining (reactor vessel/RCS [*PWR*] or RPV [*BWR*]) water level. The coolant heat-up rate will increase as the available water inventory is reduced. A continuing decrease in water level will lead to core uncovery.

For EAL #2, the 15-minute duration for the loss of level indication was chosen because it is half of the EAL duration specified in IC CS1. Fuel damage is not expected to occur until the core has been uncovered for greater than 1 hour.

If all level indication were unavailable during a loss of RCS/reactor vessel inventory event, operators may determine that an inventory loss is occurring by observing changes in sump and/or tank levels. Sump and/or tank level changes must be evaluated against other potential sources of water flow to ensure they are indicative of leakage from the (reactor vessel/RCS [*PWR*] or RPV [*BWR*]) inventory.

If the (reactor vessel/RCS [*PWR*] or RPV [*BWR*]) inventory level continues to lower, then escalation to Site Area Emergency will be via IC CS1.

ECL Assignment Attributes: 3.1.2.B

Developer Notes:

For EAL #1 – the "site-specific level" should be based on either:

- Low-Low ECCS actuation setpoint / Level 2 [BWR]
- Bottom Inside Diameter (ID) of the RCS loop [PWR]

The BWR Low-Low ECCS Actuation Setpoint/Level 2 was chosen because it is a standard operationally significant setpoint at which some (typically high pressure ECCS) injection systems would automatically start and is a value significantly below the low RPV water level RPS actuation setpoint specified in IC CU1.

The PWR Bottom ID of the RCS Loop Setpoint was chosen because a loss of the reactor coolant recirculation suction point in the loop is imminent or has occurred, and RCS/reactor vessel level indication may off-scale low or nearly so. The Bottom ID of the RCS loop setpoint should be the level equal to the bottom of the reactor vessel loop penetration (and not the low point of the loop).

For EAL #2 - In the cold shutdown mode, normal RCS level and reactor vessel level instrumentation systems will usually be available. In the refueling mode, normal means of reactor vessel level indication may not be available. Redundant means of reactor vessel level indication will usually be installed (including the ability to monitor level visually) to assure that the ability to monitor level will not be interrupted.

Enter any 'site-specific sump and/or tank" that could be expected to rise if there were a loss of RCS/reactor vessel inventory (i.e., the lost inventory would enter the listed sump or tank).

CA2

Initiating Condition - ALERT

Loss of all offsite and all onsite AC power to emergency busses for 15 minutes or longer.

Operating Mode Applicability: Cold Shutdown, Refueling, Defueled

Example Emergency Action Levels:

Note: The Emergency Director should declare the emergency promptly upon determining that the applicable time has been exceeded, or will likely be exceeded.

(1) Loss of **ALL** offsite and **ALL** onsite AC Power to (site-specific emergency busses) for 15 minutes or longer.

Basis:

A loss of all AC power compromises all safety systems requiring electric power including those necessary for emergency core cooling, containment heat removal/pressure control, spent fuel heat removal and the ultimate heat sink.

When in the cold shutdown, refueling, or defueled mode, this condition is not classified as a Site Area Emergency because of the increased time available to restore an emergency buss to service. Additional time is available due to the reduced core decay heat load, and lower temperature and pressure in various plant systems. Thus, when in these modes, this condition represents an actual or potential substantial degradation of the level of safety of the plant.

Fifteen minutes was selected as a threshold to exclude transient or momentary power losses.

ECL Assignment Attributes: 3.1.2.B

Developer Notes:

The "site-specific emergency busses" are the busses fed by offsite or emergency AC power sources that supply power to the electrical distribution system that powers safety systems. There is typically 1 emergency buss per train of safety systems.

For a backup power source comprised of two or more generators (e.g., two 50%-capacity generators sized to feed 1 emergency buss), the EAL and/or Basis section must specify that all generators for that source are operating.

The EAL and/or Basis section may specify use of a non-safety-related power source provided that operation of this source is controlled in accordance with abnormal or emergency operating procedures.

At multi-unit stations, the EALs should allow credit for compensatory measures that are proceduralized and can be implemented within 15 minutes. Consider capabilities such as power source cross-ties, "swing" generators, other power sources described in abnormal or emergency operating procedures, etc. Plants that have a proceduralized capability to cross-tie AC power

from an offsite power supply of a companion unit may take credit for the redundant power source in the associated EAL for this IC. These stations must also consider the impact of this condition on safety system functions shared between multiple units.

As used above, safety systems are those systems required for safe plant operation, cooling down the unit and placing it in the cold shutdown condition. These systems include the ECCS; on-site emergency AC and DC power sources and distribution systems; and associated support systems necessary for operation.

CA3

Initiating Condition - ALERT

Inability to maintain the plant in cold shutdown.

Operating Mode Applicability: Cold Shutdown, Refueling

Example Emergency Action Levels: (1 or 2)

Note: The Emergency Director should declare the emergency promptly upon determining that the applicable time has been exceeded, or will likely be exceeded.

(1) UNPLANNED loss of decay heat removal capability resulting in RCS temperature greater than (site-specific Technical Specification cold shutdown temperature limit) for greater than the duration specified in the following table.

Table: RCS Reheat Duration Threshold

CNMT Status / RCS Status	CONTAINMENT CLOSURE not established	CONTAINMENT CLOSURE established
RCS Not Intact	0 minutes	20 minutes*
RCS at reduced inventory (mid-loop operation) [*PWR*]	0 minutes	20 minutes*
RCS Intact	60 minutes*	60 minutes*

* If an RCS heat removal system is in operation within this time frame and RCS temperature is being reduced, the EAL is not applicable.

(2) UNPLANNED loss of decay heat removal capability resulting in an RCS pressure rise greater than (site-specific pressure reading). (This EAL does not apply during water-solid plant conditions. [PWR])

Basis:

A momentary UNPLANNED excursion above the Technical Specification cold shutdown temperature limit when the heat removal function is available does not warrant a classification.

The RCS Reheat Duration Threshold table addresses a complete loss of core cooling functions when CONTAINMENT CLOSURE is established but RCS integrity is not established (not intact), or RCS inventory is reduced (e.g., mid-loop operation in PWRs). The 20-minute criterion was included to allow time for operator action to restore the heat removal function, if possible.

The RCS Reheat Duration Threshold table also addresses a complete loss of core cooling functions with RCS integrity established (intact). The status of the containment barrier or

CONTAINMENT CLOSURE is not crucial in this condition since the intact RCS is providing a high pressure barrier to a fission product release. The 60-minute time frame should allow sufficient time to restore cooling without there being a substantial degradation in plant safety.

In the case where there is a complete loss of core cooling functions, and when the RCS is not intact or is at reduced inventory, and the containment barrier is not functional, no reheat duration is allowed (i.e., 0 minutes). This is because 1) the evaporated reactor coolant may be released directly into the Containment atmosphere and 2) there is reduced reactor coolant inventory above the top of active fuel (TOAF). Even though fuel damage is not immediate, two fission product barriers, the RCS and containment, are not available.

EAL #2 provides a pressure-based indication of RCS heatup resulting from an UNPLANNED loss of decay heat removal capability.

The Emergency Director must remain alert to events or conditions that lead to the conclusion that exceeding the EAL is IMMINENT. If, in the judgment of the Emergency Director, an IMMINENT situation is at hand, the classification should be made as if the EAL has been exceeded.

Escalation to Site Area Emergency would be via CS1 should boiling result in a significant loss of reactor vessel level.

ECL Assignment Attributes: 3.1.2.B

Developer Notes:

For EAL #1 – Enter the "site-specific Technical Specification cold shutdown temperature limit" where indicated. The RCS should be considered intact or not intact in accordance with site-specific criteria.

For EAL #2 - The "site-specific pressure reading" should be 10 psi, or the lowest change in pressure that can accurately be read on installed analog instrumentation that is equal to or greater than 10 psi.

For PWRs, this IC and its associated EALs address the concerns raised by Generic Letter 88-17, *Loss of Decay Heat Removal*. A number of phenomena such as pressurization, vortexing, steam generator U-tube draining, RCS level differences when operating at a mid-loop condition, decay heat removal system design, and level instrumentation problems can lead to conditions where decay heat removal is lost and core uncovery can occur. NRC analyses show that there are sequences that can cause core uncovery in 15 to 20 minutes, and severe core damage within an hour after decay heat removal is lost. The allowed time frames are consistent with the guidance provided by Generic Letter 88-17 and believed to be conservative given that a low pressure Containment barrier to fission product release is established.

CS1

Initiating Condition - SITE AREA EMERGENCY

Loss of (reactor vessel/RCS [*PWR*] or RPV [*BWR*]) inventory affecting core decay heat removal capability.

Operating Mode Applicability: Cold Shutdown, Refueling

Example Emergency Action Levels: (1 or 2 or 3)

Note: The Emergency Director should declare the emergency promptly upon determining that the applicable time has been exceeded, or will likely be exceeded.

(1) a. CONTAINMENT CLOSURE not established.

AND

b. (Reactor vessel/RCS [*PWR*] or RPV [*BWR*]) level less than (site-specific level).

(2) a. CONTAINMENT CLOSURE established.

AND

b. (Reactor vessel/RCS [*PWR*] or RPV [*BWR*]) level less than (site-specific level).

(3) a. (Reactor vessel/RCS [*PWR*] or RPV [*BWR*]) level cannot be monitored for 30 minutes or longer.

AND

b. Core uncovery is indicated by **ANY** of the following:

- (Site-specific radiation monitor) reading greater than (site-specific value)
- Erratic source range monitor indication [*PWR*]
- UNPLANNED rise in (site-specific sump and/or tank levels) of sufficient magnitude to indicate core uncovery
- (Other site-specific indications)

Basis:

This IC addresses a significant and prolonged loss of RCS/reactor vessel inventory control and makeup leading to IMMINENT fuel damage. The lost inventory may be due to a RCS component failure, a loss of configuration control or prolonged boiling of reactor coolant. These conditions are consistent with the attributes of a Site Area Emergency.

Following an extended loss of RCS/reactor vessel heat removal and makeup, decay heat will cause reactor coolant boiling and a further reduction in reactor vessel level. If RCS/reactor vessel level cannot be restored, fuel damage is probable. Accident analyses suggest that fuel damage may occur within one hour of uncovery.

In the cold shutdown mode, normal RCS level and reactor vessel level instrumentation systems will usually be available. In the refueling mode, normal means of reactor vessel level indication may not be available. Redundant means of reactor vessel level indication will usually be installed (including the ability to monitor level visually) to assure that the ability to monitor level will not be interrupted.

Outage/shutdown contingency plans typically provide for re-establishing or verifying CONTAINMENT CLOSURE following a loss of heat removal or RCS inventory control functions. The difference in the specified RCS/reactor vessel levels of EALs 1.b and 2.b reflect the fact that with CONTAINMENT CLOSURE established, there is a lower probability of a fission product release to the environment.

Escalation to a General Emergency is via Initiating Conditions CG1 or AG1.

EAL #3

In EAL 3.a, the 30-minute criterion is tied to a readily recognizable event start time (i.e., the total loss of ability to monitor level), and allows sufficient time to monitor, assess and correlate reactor and plant conditions to determine if core uncover has actually occurred (i.e., to account for various accident progression and instrumentation uncertainties). It also allows sufficient time for performance of actions to terminate leakage, recover inventory control/makeup equipment and/or restore level monitoring.

If all level indication were unavailable during a loss of RCS/reactor vessel inventory event, operators may determine that an inventory loss is occurring by observing changes in sump and/or tank levels. Sump and/or tank level changes must be evaluated against other potential sources of water flow to ensure they are indicative of leakage from the RCS/reactor vessel.

These EALs address concerns raised by Generic Letter 88-17, *Loss of Decay Heat Removal*; SECY 91-283, *Evaluation of Shutdown and Low Power Risk Issues*; NUREG-1449, *Shutdown and Low-Power Operation at Commercial Nuclear Power Plants in the United States*; and NUMARC 91-06, *Guidelines for Industry Actions to Assess Shutdown Management*.

ECL Assignment Attributes: 3.1.3.B

Developer Notes:

PWR

For EAL #1.b – the “site-specific level” is 6" below the bottom ID of the RCS loop. This is the level at 6” below the bottom ID of the reactor vessel penetration and not the low point of the loop. PWRs unable to measure this level should choose the first observable level below the bottom ID of the loop as the EAL value. If the range of water level instrumentation is such that the EAL value cannot be evaluated, then EAL 3 should be used to determine if the IC has been met.

For EAL #2.b – The “site-specific level” should be for the top of active fuel.

For EAL #3.b – first bullet - As water level in the reactor vessel lowers, the dose rate above the core will increase. Enter a “site-specific radiation monitor” that could be used to detect core

uncovery (i.e., level at TOAF) and the associated "site-specific value" indicative of core uncovery. It is recognized that some monitors may be off-scale high during conditions in which the core is uncovered. In those cases, EAL values should be determined with a margin sufficient to ensure that accurate monitor reading is available. For example, an EAL monitor reading might be set at 90% to 95% of the highest accurate monitor reading.

To further promote accurate classification, developers should determine if some combination of monitors could be specified in the EAL to build-in an appropriate level of corroboration between monitor readings into the classification assessment.

For EAL #3.b – second bullet - Post-TMI accident studies indicated that the installed PWR nuclear instrumentation will operate erratically when the core is uncovered and that this should be used as a tool for making such determinations.

For EAL #3.b – third bullet – Enter any 'site-specific sump and/or tank level" that could be expected to change if there were a loss of RCS/reactor vessel inventory of sufficient magnitude to indicate core uncovery. Specific level values may be included if desired.

For EAL #3.b – fourth bullet - Developers should determine if other reliable indicators exist to identify fuel uncovery. The goal is to identify any unique or site-specific indications, not already used elsewhere, that will promote timely and accurate emergency classification.

<u>BWR</u>

For EAL #1.b – "site-specific level" is the Low-Low-Low ECCS actuation setpoint / Level 1. The BWR Low-Low-Low ECCS actuation setpoint / Level 1 was chosen because it is a standard operationally significant setpoint at which some (typically low pressure ECCS) injection systems would automatically start and attempt to restore RPV level. This is a RPV water level value that is observable below the Low-Low/Level 2 value specified in IC CA1, but significantly above the Top of Active Fuel (TOAF) threshold specified in EAL #2.

For EAL #2.b – The "site-specific level" should be for the top of active fuel.

For EAL #3.b – first bullet - As water level in the reactor vessel lowers, the dose rate above the core will increase. Enter a "site-specific radiation monitor" that could be used to detect core uncovery (i.e., level at TOAF) and the associated "site-specific value" indicative of core uncovery. It is recognized that some monitors may be off-scale high during conditions in which the core is uncovered. In those cases, EAL values should be determined with a margin sufficient to ensure that accurate monitor reading is available. For example, an EAL monitor reading might be set at 90% to 95% of the highest accurate monitor reading.

To further promote accurate classification, developers should determine if some combination of monitors could be specified in the EAL to build-in an appropriate level of corroboration between monitor readings into the classification assessment.

For BWRs that do not have installed radiation monitors capable of indicating core uncovery, alternate site-specific level indications of core uncovery should be used if available.

For EAL #3.b – second bullet - Because BWR source range monitor (SRM) nuclear instrumentation detectors are typically located below core mid-plane, this may not be a viable indicator of core uncovery for BWRs.

For EAL #3.b – third bullet – Enter any 'site-specific sump and/or tank level" that could be expected to change if there were a loss of RPV inventory of sufficient magnitude to indicate core uncovery. Specific level values may be included if desired.

For EAL #3.b – fourth bullet - Developers should determine if other reliable indicators exist to identify fuel uncovery. The goal is to identify any unique or site-specific indications, not already used elsewhere, that will promote timely and accurate emergency classification.

CG1

Initiating Condition - GENERAL EMERGENCY

Loss of (reactor vessel/RCS [*PWR*] or RPV [*BWR*]) inventory affecting fuel clad integrity with containment challenged.

Operating Mode Applicability: Cold Shutdown, Refueling

Example Emergency Action Levels: (1 or 2)

Note: The Emergency Director should declare the emergency promptly upon determining that the applicable time has been exceeded, or will likely be exceeded.

(1) a. (Reactor vessel/RCS [*PWR*] or RPV [*BWR*]) level less than (site-specific level) for 30 minutes or longer.

AND

b. **ANY** indication from the Containment Challenge Table.

(2) a. (Reactor vessel/RCS [*PWR*] or RPV [*BWR*]) level cannot be monitored for 30 minutes or longer.

AND

b. Core uncovery is indicated by **ANY** of the following:

- (Site-specific radiation monitor) reading greater than (site-specific value)
- Erratic source range monitor indication [*PWR*]
- UNPLANNED rise in (site-specific sump and/or tank levels) of sufficient magnitude to indicate core uncovery
- (Other site-specific indications)

AND

c. **ANY** indication from the Containment Challenge Table.

Containment Challenge Table
■ CONTAINMENT CLOSURE not established*
■ (Site-specific explosive mixture) exists inside containment
■ UNPLANNED rise in containment pressure
■ Secondary containment radiation monitor reading above (site-specific value) [*BWR*]

* If CONTAINMENT CLOSURE is re-established prior to exceeding the 30-minute core uncovery time limit, then escalation to a General Emergency is not required.

Basis:

This IC addresses the inability to restore and maintain reactor vessel level above the top of active

fuel with containment challenged. This condition represents actual or IMMINENT substantial core degradation or melting with potential for loss of containment integrity. Releases can be reasonably expected to exceed EPA PAG exposure levels offsite for more than the immediate site area.

Following an extended loss of RCS/reactor vessel heat removal and makeup, decay heat will cause reactor coolant boiling and a further reduction in reactor vessel level. If RCS/reactor vessel level cannot be restored, fuel damage is probable. Accident analyses suggest that fuel damage may occur within one hour of uncovery.

In the cold shutdown mode, normal RCS level and reactor vessel level instrumentation systems will usually be available. In the refueling mode, normal means of reactor vessel level indication may not be available. Redundant means of reactor vessel level indication will usually be installed (including the ability to monitor level visually) to assure that the ability to monitor level will not be interrupted.

If all level indication were unavailable during a loss of RCS/reactor vessel inventory event, operators may determine that an inventory loss is occurring by observing changes in sump and/or tank levels. Sump and/or tank level changes must be evaluated against other potential sources of water flow to ensure they are indicative of leakage from the RCS/reactor vessel.

With the CONTAINMENT barrier open or challenged, there is a high potential for a direct and unmonitored release of radioactivity to the environment.

If CONTAINMENT CLOSURE is re-established prior to exceeding the 30-minute core uncovery time limit, then escalation to a General Emergency is not required.

The existence of an explosive mixture means, at a minimum, that the containment atmospheric hydrogen concentration is sufficient to support a hydrogen burn (i.e., at the lower deflagration limit). A hydrogen burn will raise containment pressure and could result in collateral equipment damage leading to a loss of containment integrity. It therefore represents a challenge to Containment integrity.

In the early stages of a core uncovery event, it is unlikely that hydrogen buildup due to a core uncovery could result in an explosive gas mixture in containment. If all installed hydrogen gas monitors are out-of-service during an event leading to fuel cladding damage, it may not be possible to obtain a containment hydrogen gas concentration reading as ambient conditions within the containment will preclude personnel access. During periods when installed containment hydrogen gas monitors are out-of-service, operators may use the other listed indications to assess containment challenge indications.

In EAL 2.b, the 30-minute criterion is tied to a readily recognizable event start time (i.e., the total loss of ability to monitor level), and allows sufficient time to monitor, assess and correlate reactor and plant conditions to determine if core uncover has actually occurred (i.e., to account for various accident progression and instrumentation uncertainties). It also allows sufficient time for performance of actions to terminate leakage, recover inventory control/makeup equipment and/or restore level monitoring.

These EALs address concerns raised by Generic Letter 88-17, *Loss of Decay Heat Removal*;

SECY 91-283, *Evaluation of Shutdown and Low Power Risk Issues*; NUREG-1449, *Shutdown and Low-Power Operation at Commercial Nuclear Power Plants in the United States*; and NUMARC 91-06, *Guidelines for Industry Actions to Assess Shutdown Management*.

ECL Assignment Attributes: 3.1.4.B

Developer Notes:

For EAL #1.a – The "site-specific level" should be for the top of active fuel.

For EAL #2.b - first bullet - As water level in the reactor vessel lowers, the dose rate above the core will increase. Enter a "site-specific radiation monitor" that could be used to detect core uncovery (i.e., level at TOAF) and the associated "site-specific value" indicative of core uncovery. It is recognized that some monitors may be off-scale high during conditions in which the core is uncovered. In those cases, EAL values should be determined with a margin sufficient to ensure that accurate monitor reading is available. For example, an EAL monitor reading might be set at 90% to 95% of the highest accurate monitor reading.

To further promote accurate classification, developers should determine if some combination of monitors could be specified in the EAL to build-in an appropriate level of corroboration between monitor readings into the classification assessment.

For BWRs that do not have installed radiation monitors capable of indicating core uncovery, alternate site-specific level indications of core uncovery should be used if available.

For EAL #2.b - second bullet - Post-TMI studies indicated that the installed PWR nuclear instrumentation will operate erratically when the core is uncovered and that this should be used as a tool for making such determinations. Because BWR Source Range Monitor (SRM) nuclear instrumentation detectors are typically located below core mid-plane, this may not be a viable indicator of core uncover for BWRs.

For EAL #2.b – third bullet - Enter any 'site-specific sump and/or tank level" that could be expected to change if there were a loss of RPV inventory of sufficient magnitude to indicate core uncovery. Specific level values may be included if desired.

For EAL #2.b – fourth bullet - Developers should determine if other reliable indicators exist to identify fuel uncovery. The goal is to identify any unique or site-specific indications, not already used elsewhere, that will promote timely and accurate emergency classification.

For the Containment Challenge Indications Table:

Site shutdown contingency plans typically provide for re-establishing CONTAINMENT CLOSURE following a loss of RCS heat removal or inventory control functions.

For "site-specific explosive mixture", developers may enter the minimum containment atmospheric hydrogen concentration necessary to support a hydrogen burn (i.e., the lower deflagration limit). A concurrent containment oxygen concentration may be included if the plant has this indication available in the Control Room.

For BWRs, the use of secondary containment radiation monitors should provide indication of increased release that may be indicative of a challenge to secondary containment. The "site-specific value" should be based on the EOP maximum safe values because these values are easily recognizable and have a defined basis.

8 INDEPENDENT SPENT FUEL STORAGE INSTALLATION (ISFSI) ICS/EALS

Table E-1: Recognition Category "E" Initiating Condition Matrix

UNUSUAL EVENT

E-HU1 Damage to a loaded cask CONFINEMENT BOUNDARY.
Op. Modes: All

Table intended for use by EAL developers. Inclusion in licensee documents is not required.

Initiating Condition - NOTIFICATION OF UNUSUAL EVENT

Damage to a loaded cask CONFINEMENT BOUNDARY.

Operating Mode Applicability: All

Example Emergency Action Levels:

(1) Damage to a loaded cask CONFINEMENT BOUNDARY as indicated by an on-contact radiation reading greater than (2 times the site-specific cask specific technical specification allowable radiation level) on the surface of the spent fuel cask.

Basis:

This IC addresses an event that results in damage to a loaded cask CONFINEMENT BOUNDARY. The concerns are the creation of a potential or actual release path to the environment, degradation of one or more fuel assemblies due to environmental factors, and configuration changes which could cause challenges in removing the cask or fuel from storage. The existence of "damage" is determined by radiological survey.

The technical specification multiple of "2 times", which is also used in Recognition Category A IC AU1, is used to distinguish between non-emergency and emergency conditions. The emphasis for this classification is the degradation in the level of safety of the spent fuel cask and not the magnitude of the associated dose or dose rate. It is recognized that in the case of extreme damage to a loaded cask, the fact that the "on-contact" dose rate limit is exceeded may be extrapolated from a dose rate measured at some distance from the cask.

Security-related events for ISFSIs are covered under ICs HU1 and HA1.

ECL Assignment Attributes: 3.1.1.B

Developer Notes:

The results of the ISFSI Safety Analysis Report (SAR) [per NUREG 1536], or a SAR referenced in the cask Certificate of Compliance and the related NRC Safety Evaluation Report, identify the natural phenomena events and accident conditions that could potentially affect the CONFINEMENT BOUNDARY. This EAL addresses damage that could result from the range of identified natural or man-made events (e.g., a dropped or tipped over cask, EXPLOSION, FIRE, EARTHQUKE, etc.).

The allowable radiation level for a spent fuel cask can be found in the cask's technical specification located in the Certificate of Compliance.

The licensee of a stand-alone ISFSI, Monitored Retrievable Storage Facility, or ISFSI that may process and/or repackage spent fuel should consider use of this IC, as well as ICs HU1 and HA1.

9 FISSION PRODUCT BARRIER ICS/EALS

Table 9-F-1: Recognition Category "F" Initiating Condition Matrix

ALERT	
FA1	Any Loss or any Potential Loss of either the Fuel Clad or RCS barrier. *Op. Modes: Power Operation, Hot Standby, Startup, Hot Shutdown*
SITE AREA EMERGENCY	
FS1	Loss or Potential Loss of any two barriers. *Op. Modes: Power Operation, Hot Standby, Startup, Hot Shutdown*
GENERAL EMERGENCY	
FG1	Loss of any two barriers and Loss or Potential Loss of the third barrier. *Op. Modes: Power Operation, Hot Standby, Startup, Hot Shutdown*

See Table 9-F-2 for BWR EALs
See Table 9-F-3 for PWR EALs

Developer Note: The adjacent logic flow diagram is for use by developers and is not required for site-specific implementation; however, a site-specific scheme must include some type of user-aid to facilitate timely and accurate classification of fission product barrier losses and/or potential losses. Such aids are typically comprised of logic flow diagrams, "scoring" criteria or checkbox-type matrices. The user-aid logic must be consistent with that of the adjacent diagram.

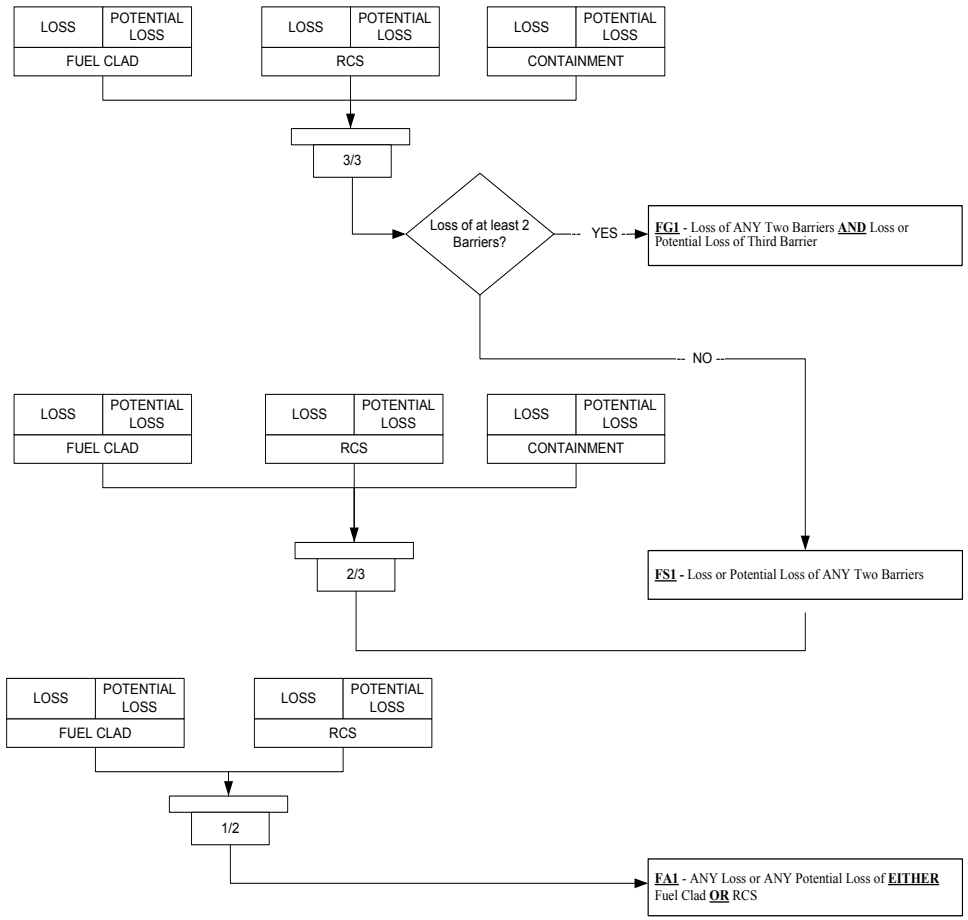

NOTES

The logic used for these initiating conditions reflects the following considerations:

- The Fuel Clad Barrier and the RCS Barrier are weighted more heavily than the Containment Barrier. NOUE ICs associated with the RCS and Fuel Clad Barriers are addressed under the System Malfunction ICs.

- The Containment Barrier should not be declared lost or potentially lost based on exceeding Technical Specification action statement criteria unless there is an event in progress requiring mitigation by the Containment Barrier.

Table 9-F-2: BWR EAL Fission Product Barrier Table

Thresholds for LOSS or POTENTIAL LOSS of Barriers

FA1 ALERT	FS1 SITE AREA EMERGENCY	FG1 GENERAL EMERGENCY
Any Loss or any Potential Loss of either the Fuel Clad or RCS barrier.	Loss or Potential Loss of any two barriers.	Loss of any two barriers and Loss or Potential Loss of the third barrier.

Fuel Clad Barrier		RCS Barrier		Containment Barrier	
LOSS	**POTENTIAL LOSS**	**LOSS**	**POTENTIAL LOSS**	**LOSS**	**POTENTIAL LOSS**
1. Reactor Coolant Activity Level		**1. Primary Containment Pressure**		**1. Primary Containment Conditions**	
A. Reactor coolant activity greater than (site-specific value)	Not Applicable	A. Primary containment pressure greater than (site-specific value) due to RCS leakage	Not Applicable	A. UNPLANNED rapid drop in primary containment pressure following primary containment pressure rise **OR** B. Primary containment pressure response not consistent with LOCA conditions	A. Primary containment pressure greater than (site-specific value) and rising **OR** B. (site-specific explosive mixture) exists inside primary containment **OR** C. RPV pressure and suppression pool temperature cannot be maintained below the HCTL

Fuel Clad Barrier		RCS Barrier		Containment Barrier	
LOSS	**POTENTIAL LOSS**	**LOSS**	**POTENTIAL LOSS**	**LOSS**	**POTENTIAL LOSS**
2. RPV Water Level		**2. RPV Water Level**		**2. RPV Water Level**	
A. Primary containment flooding required	A. RPV water level cannot be restored and maintained above (site-specific RPV water level corresponding to the top of active fuel) following depressurization of the RPV or cannot be determined	A. RPV water level cannot be restored and maintained above (site-specific RPV water level corresponding to the top of active fuel) following depressurization of the RPV or cannot be determined	Not Applicable	Not Applicable	A. Primary containment flooding required

3. Not Applicable		**3. RCS Leak Rate**		**3. Primary Containment Isolation Failure**	
Not Applicable	Not Applicable	A. UNISOLABLE break in **ANY** of the following: (site-specific systems with potential for high-energy line breaks) **OR** B. Emergency RPV Depressurization is required	A. UNISOLABLE primary system leakage that results in exceeding **EITHER** of the following: 1. Max Normal Operating Temperature **OR** 2. Max Normal Operating Area Radiation Level	A. UNISOLABLE direct downstream pathway to the environment exists after primary containment isolation signal **OR** B. Intentional primary containment venting per EOPs **OR** C. UNISOLABLE primary system leakage that results in exceeding **EITHER** of the following: 1. Max Safe Operating Temperature. **OR** 2. Max Safe Operating Area Radiation Level	Not Applicable

4. Primary Containment Radiation Monitoring		**4. Primary Containment Radiation Monitoring**		**4. Primary Containment Radiation Monitoring**	
A. Primary containment radiation monitor reading greater than (site-specific value)	Not Applicable	A. Primary containment radiation monitor reading greater than (site-specific value)	Not Applicable	Not Applicable	A. Primary containment radiation monitor reading greater than (site-specific value)
5. Other Indications		**5. Other Indications**		**5. Other Indications**	
A. (site-specific as applicable)	A. (site-specific as applicable)	A. (site-specific as applicable)	A. (site-specific as applicable)	A. (site-specific as applicable)	A. (site-specific as applicable)
6. Emergency Director Judgment		**6. Emergency Director Judgment**		**6. Emergency Director Judgment**	
A. **ANY** condition in the opinion of the Emergency Director that indicates Loss of the Fuel Clad Barrier	A. **ANY** condition in the opinion of the Emergency Director that indicates Potential Loss of the Fuel Clad Barrier	A. **ANY** condition in the opinion of the Emergency Director that indicates Loss of the RCS Barrier	A. **ANY** condition in the opinion of the Emergency Director that indicates Potential Loss of the RCS Barrier	A. **ANY** condition in the opinion of the Emergency Director that indicates Loss of the Containment Barrier	A. **ANY** condition in the opinion of the Emergency Director that indicates Potential Loss of the Containment Barrier

Basis Information For
BWR EAL Fission Product Barrier Table 9-F-2

FUEL CLAD BARRIER THRESHOLDS:

The Fuel Clad barrier consists of the zircalloy or stainless steel fuel bundle tubes that contain the fuel pellets.

1. Reactor Coolant Activity Level

Loss 1.A

This value indicates that RCS activity is in excess of 300 μCi/gm dose equivalent I-131. This level of reactor coolant activity is well above that expected for iodine spikes and corresponds to an approximate range of 2% to 5% fuel clad damage. Since this condition indicates that a significant amount of clad damage has occurred, it represents a loss of the Fuel Clad Barrier.

It is recognized that RCS sampling and analysis activities, particularly those involving samples with elevated activity levels, could require several hours to complete. Nonetheless, a sample-related threshold is included as a backup to other indications.

There is no Potential Loss threshold associated with this item.

Developer Notes:

The threshold value should be expressed as either a dose rate measured on the sample or radioactivity concentration such as μCi/gm or μCi/cc.

2. RPV Water Level

Loss 2.A

The Loss threshold represents the EOP requirement for primary containment flooding. This is identified in the BWROG EPGs/SAGs when the phrase, “Primary Containment Flooding Is Required," appears. Since a site-specific RPV water level is not specified here, the Loss threshold phrase, “Primary Containment Flooding Required,” also accommodates the EOP need to flood the primary containment when RPV water level cannot be determined and core damage due to inadequate core cooling is believed to be occurring.

Potential Loss 2.A

The RPV water level threshold is the same as RCS barrier Loss threshold 2.A and corresponds to the site-specific water level at the top of the active fuel and to a challenge to core cooling. Thus, this threshold indicates a Potential Loss of the Fuel Clad barrier and a Loss of RCS barrier that appropriately escalates the emergency classification level to a Site Area Emergency.

This threshold is exceeded when, as specified in the site-specific EOPs, RPV water cannot be restored and maintained above the specified level following depressurization of the RPV (either manually, automatically or by failure of the RCS barrier). EOPs allow the operator a wide choice of RPV injection sources to consider when restoring RPV water level to within prescribed limits. EOPs also specify depressurization of the RPV in order to facilitate RPV water level control with low-pressure injection sources. In some events, elevated RPV pressure may prevent restoration of RPV water level until pressure drops below the shutoff heads of available injection sources. Therefore, this Fuel Clad barrier Potential Loss is met only after the RPV has been depressurized and the operator has been able to assess the capability of low-pressure injection sources to restore RPV water level.

The term "cannot be restored and maintained above" means the value of RPV water level is not able to be brought above the specified limit (top of active fuel). The determination requires an evaluation of system performance and availability in relation to the RPV water level value and trend. A threshold prescribing declaration when a threshold value *cannot* be restored and maintained above a specified limit does not require immediate action simply because the current value is below the top of active fuel, but does not permit extended operation below the limit; the threshold must be considered reached as soon as it is apparent that the top of active fuel cannot be attained.

In high-power ATWS/failure to scram events, EOPs may direct the operator to deliberately lower RPV water level to the top of active fuel in order to reduce reactor power. RPV water level is then controlled between the top of active fuel and the Minimum Steam Cooling RPV Water Level (MSCRWL). Although such action is a challenge to core cooling and the Fuel Clad barrier, the immediate need to reduce reactor power is the higher priority. For such events, ICs SA2, SS2 and SG2 will dictate the need for emergency classification.

Since the loss of ability to determine if adequate core cooling is being provided presents a significant challenge to the fuel clad barrier, a potential loss of the fuel clad barrier is specified.

Developer Notes:

<u>Loss 2.A</u>

The phrase, "Primary Containment Flooding Is Required," should be modified to agree with the site-specific EOP phrase indicating exit from all EOPs and entry to the SAGs (e.g., drywell flooding required, etc.).

<u>Potential Loss 2.A</u>

The decision that "RPV water level cannot be determined" is directed by guidance given in the RPV water level control sections of the EOPs.

3. Not Applicable (included for numbering consistency between barrier tables)

4. Primary Containment Radiation Monitoring

Loss 4.A

The site-specific reading is a value which indicates the release of reactor coolant, with elevated activity indicative of fuel damage, into the drywell.

Reactor coolant concentrations of this magnitude are several times larger than the maximum concentrations (including iodine spiking) allowed within Technical Specifications and are therefore indicative of fuel damage.

This value is higher than that specified for RCS barrier Loss threshold 4.A. Thus, this threshold indicates a loss of both Fuel Clad barrier and RCS barrier that appropriately escalates the emergency classification level to a Site Area Emergency.

There is no Potential Loss threshold associated with primary containment radiation indications.

Developer Notes:

The reading should be calculated assuming the instantaneous release and dispersal of the reactor coolant noble gas and iodine inventory associated with a concentration of 300 μCi/gm dose equivalent I-131 or the calculated concentration equivalent to the clad damage used in threshold 1 into the drywell atmosphere.

However, if the site-specific physical location and sensitivity of the primary containment radiation monitor is such that radiation from a cloud of released RCS gases could not be distinguished from radiation from adjacent piping and components containing elevated reactor coolant activity, this threshold should be omitted.

5. Other Indications

Loss and/or Potential Loss 5.A

This subcategory addresses other site-specific thresholds that may be included to indicate loss or potential loss of the Fuel Clad barrier based on plant-specific design characteristics not considered in the generic guidance.

Developer Notes:

Developers should determine if other reliable indicators exist to evaluate the status of this fission product barrier (e.g., review accident analyses described in the site Final Safety Analysis Report, as updated). The goal is to identify any unique or site-specific indications that will promote timely and accurate assessment of barrier status.

Any added thresholds should represent approximately the same relative threat to the barrier as the other thresholds in this column. Basis information for the other thresholds may be used to gauge the relative barrier threat level.

6. Emergency Director Judgment

Loss 6.A

This threshold addresses any other factors that are to be used by the Emergency Director in determining whether the Fuel Clad barrier is lost.

Potential Loss 6.A

This threshold addresses any other factors that may be used by the Emergency Director in determining whether the Fuel Clad Barrier is potentially lost. The Emergency Director should also consider whether or not to declare the barrier potentially lost in the event that barrier status cannot be monitored.

RCS BARRIER THRESHOLDS:

The RCS Barrier is the reactor coolant system pressure boundary and includes the reactor vessel and all reactor coolant system piping up to the isolation valves.

1. Primary Containment Conditions

Loss 1.A

The (site-specific value) primary containment pressure is the drywell high pressure setpoint which indicates a LOCA by automatically initiating the ECCS or equivalent makeup system.

There is no Potential Loss threshold associated with this primary containment condition.

2. RPV Water Level

Loss 2.A

This water level corresponds to the top of active fuel and is used in the EOPs to indicate challenge to core cooling.

The site-specific RPV water level threshold is the same as Fuel Clad barrier Potential Loss threshold 2.A. Thus, this threshold indicates a Loss of RCS barrier and Potential Loss of Fuel Clad barrier and appropriately escalates the emergency classification level to a Site Area Emergency. This threshold is considered to be exceeded when, as specified in the site-specific EOPs, that RPV water cannot be restored and maintained above the specified level following depressurization of the RPV (either manually, automatically or by failure of the RCS barrier). There is no Potential Loss threshold associated with this RPV water level.

The term, "cannot be restored and maintained above," means the value of RPV water level is not able to be brought above the specified limit (top of active fuel). The determination requires an evaluation of system performance and availability in relation to the RPV water level value and trend. A threshold prescribing declaration when a threshold value *cannot* be restored and maintained above a specified limit does not require immediate action simply because the current value is below the top of active fuel, but does not permit extended operation beyond the limit; the threshold must be considered reached as soon as it is apparent that the top of active fuel cannot be attained.

In high-power ATWS/failure to scram events, EOPs may direct the operator to deliberately lower RPV water level to the top of active fuel in order to reduce reactor power. RPV water level is then controlled between the top of active fuel and the Minimum Steam Cooling RPV Water Level (MSCRWL). Although such action is a challenge to core cooling and the Fuel Clad barrier, the immediate need to reduce reactor power is the higher priority. For such events, ICs SA2, SS2 and SG2 will dictate the need for emergency classification.

There is no RCS Potential Loss threshold associated with RPV Water Level.

3. RCS Leak Rate

Loss Threshold 3.A

Large high-energy lines that rupture outside primary containment can discharge significant amounts of inventory and jeopardize the pressure-retaining capability of the RCS until they are isolated. If it is determined that the ruptured line cannot be promptly isolated from the Control Room, the RCS barrier Loss threshold is met.

Loss Threshold 3.B

Plant symptoms requiring Emergency RPV Depressurization per the EOPs are indicative of a loss of the RCS barrier. If Emergency RPV Depressurization is required, the plant operators are directed to open safety relief valves (SRVs) and keep them open. Even though the RCS is being vented into the suppression pool, a Loss of the RCS barrier exists due to the diminished effectiveness of the RCS to retain fission products within its boundary.

Potential Loss Threshold 3.A

Potential loss of RCS based on primary system leakage outside the primary containment is determined from EOP temperature or radiation Max Normal Operating values in areas such as main steam line tunnel, RCIC, HPCI, etc., which indicate a direct path from the RCS to areas outside primary containment.

A Max Normal Operating value is the highest value of the identified parameter expected to occur during normal plant operating conditions with all directly associated support and control systems functioning properly.

The indicators reaching the threshold barriers and confirmed to be caused by RCS leakage from a primary system warrant an Alert classification. A primary system is defined to be the pipes, valves, and other equipment which connect directly to the RPV such that a reduction in RPV pressure will effect a decrease in the steam or water being discharged through an unisolated break in the system.

An UNISOLABLE leak which is indicated by Max Normal Operating values escalates to a Site Area Emergency when combined with Containment Barrier Loss threshold 3.A (after a containment isolation) and a General Emergency when the Fuel Clad Barrier criteria is also exceeded.

Developer Notes:

Loss Threshold 3.A

The list of systems included in this threshold should be the high energy lines which, if ruptured and remain unisolated, can rapidly depressurize the RPV. These lines are typically isolated by actuation of the Leak Detection system.

Large high-energy line breaks such as Main Steam Line (MSL), High Pressure Coolant Injection (HPCI), Feedwater, Reactor Water Cleanup (RWCU), Isolation Condenser (IC)

or Reactor Core Isolation Cooling (RCIC) that are UNISOLABLE represent a significant loss of the RCS barrier.

4. Primary Containment Radiation Monitoring

Loss 4.A

(site-specific reading) is a value which indicates the release of reactor coolant to the primary containment.

This reading will be less than that specified for Fuel Clad Barrier Loss threshold 4.A. Thus, this threshold would be indicative of a RCS leak only. If the radiation monitor reading increased to that value specified by Fuel Clad Barrier threshold, fuel damage would also be indicated.

There is no RCS Potential Loss threshold associated with Primary Containment Radiation Monitoring.

Developer Notes:

The reading should be calculated assuming the instantaneous release and dispersal of the reactor coolant noble gas and iodine inventory associated with normal operating concentrations (i.e., maximum allowed by T/S) into the drywell atmosphere. Using RCS activity at Technical Specification allowable limits aligns this threshold with IC SU4. Also, RCS activity at his level will typically result in containment radiation levels that can be more readily detected by containment radiation monitors, and more readily differentiated from those caused by piping or component “shine” sources.

In some cases, the site-specific physical location and sensitivity of the primary containment radiation monitor(s) may be such that radiation from a cloud of released RCS gases cannot be distinguished from radiation emanating from piping and components containing elevated reactor coolant activity. If so, refer to the Developer Guidance for Loss/Potential Loss 5.A and determine if an alternate indication is available.

5. Other Indications

Loss and/or Potential Loss 5.A

This subcategory addresses other site-specific thresholds that may be included to indicate loss or potential loss of the RCS barrier based on plant-specific design characteristics not considered in the generic guidance.

Developer Notes:

Developers should determine if other reliable indicators exist to evaluate the status of this fission product barrier (e.g., review accident analyses described in the site Final Safety Analysis Report, as updated). The goal is to identify any unique or site-specific indications that will promote timely and accurate assessment of barrier status.

Any added thresholds should represent approximately the same relative threat to the barrier as the other thresholds in this column. Basis information for the other thresholds may be used to gauge the relative barrier threat level.

6. Emergency Director Judgment

Loss 6.A

This threshold addresses any other factors that are to be used by the Emergency Director in determining whether the RCS barrier is lost.

Potential Loss 6.A

This threshold addresses any other factors that may be used by the Emergency Director in determining whether the RCS Barrier is potentially lost. The Emergency Director should also consider whether or not to declare the barrier potentially lost in the event that barrier status cannot be monitored.

CONTAINMENT BARRIER THRESHOLDS:

The Primary Containment Barrier includes the drywell, the wetwell, their respective interconnecting paths, and other connections up to and including the outermost containment isolation valves. Containment Barrier thresholds are used only as discriminators for escalation from an Alert to a Site Area Emergency or a General Emergency.

1. Primary Containment Conditions

Loss 1.A and 1.B

Rapid UNPLANNED loss of primary containment pressure (i.e., not attributable to drywell spray or condensation effects) following an initial pressure increase indicates a loss of primary containment integrity. Primary containment pressure should increase as a result of mass and energy release into primary containment from a LOCA. Thus, primary containment pressure not increasing under these conditions indicates a loss of primary containment integrity.

These thresholds rely on operator recognition of an unexpected response for the condition and therefore a specific value is not assigned. The unexpected (UNPLANNED) response is important because it is the indicator for a containment bypass condition.

Potential Loss 1.A

The threshold pressure is the primary containment internal design pressure. Structural acceptance testing demonstrates the capability of the primary containment to resist pressures greater than the internal design pressure. A pressure of this magnitude is greater than those expected to result from any design basis accident and, thus, represent a Potential Loss of the Containment barrier.

Potential Loss 1.B

If hydrogen concentration reaches or exceeds the lower flammability limit, as defined in plant EOPs, in an oxygen rich environment, a potentially explosive mixture exists. If the combustible mixture ignites inside the primary containment, loss of the Containment barrier could occur.

Potential Loss 1.C

The Heat Capacity Temperature Limit (HCTL) is the highest suppression pool temperature from which Emergency RPV Depressurization will not raise:

- Suppression chamber temperature above the maximum temperature capability of the suppression chamber and equipment within the suppression chamber which may be required to operate when the RPV is pressurized,

OR

- Suppression chamber pressure above Primary Containment Pressure Limit A, while the rate of energy transfer from the RPV to the containment is greater than the capacity of the containment vent.

The HCTL is a function of RPV pressure and suppression pool water level. It is utilized to preclude failure of the containment and equipment in the containment necessary for the safe shutdown of the plant and therefore, the inability to maintain plant parameters below the limit constitutes a potential loss of containment.

Developer Notes:

Potential Loss 1.B

BWR EPGs/SAGs specifically define the limits associated with explosive mixtures in terms of deflagration concentrations of hydrogen and oxygen. For Mk I/II containments the deflagration limits are "6% hydrogen and 5% oxygen in the drywell or suppression chamber". For Mk III containments, the limit is the "Hydrogen Deflagration Overpressure Limit". The threshold term "explosive mixture" is synonymous with the EPG/SAG "deflagration limits".

Potential Loss 1.C

Since the HCTL is defined assuming a range of suppression pool water levels as low as the elevation of the downcomer openings in Mk I/II containments or 2 ft above the elevation of the horizontal vents in a Mk III containment, it is unnecessary to consider separate Containment barrier Loss or Potential Loss thresholds for abnormal suppression pool water level conditions.

2. RPV Water Level

There is no Containment Loss threshold associated with RPV water level.

Potential Loss 2.A

The Potential Loss threshold is identical to the Fuel Clad Loss RPV Water Level threshold 2.A. The Potential Loss requirement for Primary Containment Flooding indicates adequate core cooling cannot be restored and maintained and that core damage is possible. BWR EPGs/SAGs specify the conditions that require primary containment flooding. When primary containment flooding is required, the EPGs are exited and SAGs are entered. Entry into SAGs is a logical escalation in response to the inability to restore and maintain adequate core cooling.

PRA studies indicate that the condition of this Potential Loss threshold could be a core melt sequence which, if not corrected, could lead to RPV failure and increased potential for primary containment failure. In conjunction with the RPV water level Loss thresholds in the Fuel Clad and RCS barrier columns, this threshold results in the declaration of a General Emergency.

Developer Notes:

Severe Accident Guidelines (SAGs) direct the operators to perform Primary Containment Flooding when RPV water level cannot be restored and maintained greater than the Minimum Steam Cooling RPV Water Level or RPV water level cannot be determined with indication that core damage is occurring.

3. Primary Containment Isolation Failure

These thresholds address incomplete containment isolation that allows UNISOLABLE direct release to the environment.

Loss 3.A

The use of the modifier "Direct" in defining the release path discriminates against release paths through interfacing liquid systems or minor release pathways, such as instrument lines, not protected by the Primary Containment Isolation System (PCIS). The existence of an in–line charcoal filter does not make a release path indirect since the filter is not effective at removing fission product noble gases. Typical filters have an efficiency of 95-99% removal of iodine. Given the magnitude of the core inventory of iodine, significant releases could still occur. In addition, since the fission product release would be driven by boiling in the RPV, the high humidity in the release stream can be expected to render the filters ineffective in a short period.

Loss 3.B

EOPs may direct primary containment isolation valve logic(s) to be intentionally bypassed, even if offsite radioactivity release rate limits will be exceeded. Under these conditions with a valid primary containment isolation signal, the containment should also be considered lost if primary containment venting is actually performed.

Intentional venting of primary containment for primary containment pressure or combustible gas control to the secondary containment and/or the environment is a Loss of the Containment. Venting for primary containment pressure control when not in an accident situation (e.g., to control pressure below the drywell high pressure scram setpoint) does not meet the threshold condition.

Loss 3.C

The Max Safe Operating Temperature and the Max Safe Operating Radiation Level are each the highest value of these parameters at which neither: (1) equipment necessary for the safe shutdown of the plant will fail, nor (2) personnel access necessary for the safe shutdown of the plant will be precluded. EOPs utilize these temperatures and radiation levels to establish conditions under which RPV depressurization is required.

The temperatures and radiation levels should be confirmed to be caused by RCS leakage from a primary system. A primary system is defined to be the pipes, valves, and other equipment which connect directly to the RPV such that a reduction in RPV pressure will effect a decrease in the steam or water being discharged through an unisolated break in the system.

In combination with RCS potential loss 3.A this threshold would result in a Site Area Emergency.

There is no Potential Loss threshold associated with primary containment isolation failure or bypass.

Developer Notes:

Loss 3.B

Consideration may be given to specifying the specific procedural step within the Primary Containment Control EOP that defines intentional venting of the Primary Containment regardless of offsite radioactivity release rate.

4. Primary Containment Radiation Monitoring

There is no Loss threshold associated with primary containment radiation monitoring.

Potential Loss 4.A

The value indicates significant fuel damage well in excess of that required for loss of RCS and Fuel Clad.

Regardless of whether primary containment is challenged, this amount of activity in the primary containment, if released, could have such severe consequences that it is prudent to treat this as a potential loss of containment, such that a General Emergency declaration is warranted.

Developer Notes:

A major release of radioactivity requiring off-site protective actions from core damage is not possible unless a major failure of fuel cladding allows radioactive material to be released from the core into the reactor coolant.

NUREG-1228, *Source Estimations During Incident Response to Severe Nuclear Power Plant Accidents*, indicates that such conditions do not exist when the amount of clad damage is less than 20%. Unless there is a (site-specific) analysis justifying a higher value, it is recommended that a radiation monitor reading corresponding to 20% fuel clad damage be specified here.

The reading should be calculated assuming the instantaneous release and dispersal of the reactor coolant noble gas and iodine inventory associated with 20% clad failure into the drywell atmosphere.

5. Other Indications

Loss and/or Potential Loss 5.A

This subcategory addresses other site-specific thresholds that may be included to indicate loss or potential loss of the Containment barrier based on plant-specific design characteristics not considered in the generic guidance.

Developer Notes:

Developers should determine if other reliable indicators exist to evaluate the status of this fission product barrier (e.g., review accident analyses described in the site Final Safety Analysis Report, as updated). The goal is to identify any unique or site-specific indications that will promote timely and accurate assessment of barrier status.

Any added thresholds should represent approximately the same relative threat to the barrier as the other thresholds in this column. Basis information for the other thresholds may be used to gauge the relative barrier threat level.

6. Emergency Director Judgment

Loss 6.A

This threshold addresses any other factors that are to be used by the Emergency Director in determining whether the Containment barrier is lost.

Potential Loss 6.A

This threshold addresses any other factors that may be used by the Emergency Director in determining whether the Containment Barrier is potentially lost. The Emergency Director should also consider whether or not to declare the barrier potentially lost in the event that barrier status cannot be monitored.

Table 9-F-3: PWR EAL Fission Product Barrier Table

Thresholds for LOSS or POTENTIAL LOSS of Barriers

FA1 ALERT	FS1 SITE AREA EMERGENCY	FG1 GENERAL EMERGENCY
Any Loss or any Potential Loss of either the Fuel Clad or RCS barrier.	Loss or Potential Loss of any two barriers.	Loss of any two barriers and Loss or Potential Loss of the third barrier.

Fuel Clad Barrier		**RCS Barrier**		**Containment Barrier**	
LOSS	**POTENTIAL LOSS**	**LOSS**	**POTENTIAL LOSS**	**LOSS**	**POTENTIAL LOSS**
1. RCS or SG Tube Leakage		**1. RCS or SG Tube Leakage**		**1. RCS or SG Tube Leakage**	
Not Applicable	A. RCS/reactor vessel level less than (site-specific level). **OR** B. Core Cooling Orange entry conditions met [*see Developer Notes*]	A. An automatic or manual ECCS (SI) actuation is required by **EITHER** of the following: 1. UNISOLABLE RCS leakage **OR** 2. SG tube leakage.	A. Operation of a standby charging (makeup) pump is required by **EITHER** of the following: 1. UNISOLABLE RCS leakage **OR** 2. SG tube leakage. **OR** B. RCS cooldown rate greater than (site-specific pressurized thermal shock criteria/limits defined by site-specific indications). **OR** C. RCS Integrity Red entry conditions met [*see Developer Notes*]	A. Leaking SG is FAULTED outside of containment.	Not Applicable

Fuel Clad Barrier		RCS Barrier		Containment Barrier	
LOSS	**POTENTIAL LOSS**	**LOSS**	**POTENTIAL LOSS**	**LOSS**	**POTENTIAL LOSS**
2. Inadequate Heat Removal		**2. Inadequate Heat Removal**		**2. Inadequate Heat Removal**	
A. Core exit thermocouple readings greater than (site-specific temperature value). **OR** B. Core Cooling Red entry conditions met [*see Developer Notes*]	A. Core exit thermocouple readings greater than (site-specific temperature value). **OR** B. Inadequate RCS heat removal capability via steam generators as indicated by (site-specific indications). **OR** C. Core Cooling Orange entry conditions met [*see Developer Notes*] **OR** D. Heat Sink Red entry conditions met [*see Developer Notes*]	Not Applicable	A. Inadequate RCS heat removal capability via steam generators as indicated by (site-specific indications). **OR** B. Heat Sink Red entry conditions met [*see Developer Notes*]	Not Applicable	A. 1. (Site-specific criteria for entry into core cooling restoration procedure) **AND** 2. Restoration procedure not effective within 15 minutes. **OR** B. Core Cooling Red entry conditions met for 15 minutes or longer [*see Developer Notes*]
3. RCS Activity / Containment Radiation		**3. RCS Activity / Containment Radiation**		**3. RCS Activity / Containment Radiation**	
A. Containment radiation monitor reading greater than (site-specific value). **OR** B. (Site-specific indications that	Not Applicable	A. Containment radiation monitor reading greater than (site-specific value).	Not Applicable	Not Applicable	A. Containment radiation monitor reading greater than (site-specific value).

Fuel Clad Barrier		RCS Barrier		Containment Barrier	
LOSS	**POTENTIAL LOSS**	**LOSS**	**POTENTIAL LOSS**	**LOSS**	**POTENTIAL LOSS**
reactor coolant activity is greater than 300 μCi/gm I-131 dose equivalent).					

Fuel Clad Barrier		RCS Barrier		Containment Barrier	
LOSS	**POTENTIAL LOSS**	**LOSS**	**POTENTIAL LOSS**	**LOSS**	**POTENTIAL LOSS**
4. Containment Integrity or Bypass		**4. Containment Integrity or Bypass**		**4. Containment Integrity or Bypass**	
Not Applicable	Not Applicable	Not Applicable	Not Applicable	A. Containment isolation is required **AND** **EITHER** of the following: 1. UNPLANNED rise in radiation monitor readings outside of containment that indicate a loss of containment integrity **OR** 2. UNISOLABLE pathway from the containment to the environment exists **OR** B. Indications of RCS leakage outside of containment.	A. Containment pressure greater than (site-specific value) and rising **OR** B. Explosive mixture exists inside containment **OR** C. 1. Pressure greater than (site-specific containment depressurization actuation setpoint) **AND** 2. Less than one full train of (site-specific containment depressurization equipment operating per design). **OR** D. Containment Red entry conditions met [*see Developer Notes*]

Fuel Clad Barrier		RCS Barrier		Containment Barrier	
LOSS	**POTENTIAL LOSS**	**LOSS**	**POTENTIAL LOSS**	**LOSS**	**POTENTIAL LOSS**
5. Other Indications		**5. Other Indications**		**5. Other Indications**	
A. (site-specific as applicable).	A. (site-specific as applicable).	A. (site-specific as applicable).	A. (site-specific as applicable).	A. (site-specific as applicable).	A. (site-specific as applicable).
6. Emergency Director Judgment		**6. Emergency Director Judgment**		**6. Emergency Director Judgment**	
A. **ANY** condition in the opinion of the Emergency Director that indicates Loss of the Fuel Clad Barrier.	A. **ANY** condition in the opinion of the Emergency Director that indicates Potential Loss of the Fuel Clad Barrier.	A. **ANY** condition in the opinion of the Emergency Director that indicates Loss of the RCS Barrier.	A. **ANY** condition in the opinion of the Emergency Director that indicates Potential Loss of the RCS Barrier.	A. **ANY** condition in the opinion of the Emergency Director that indicates Loss of the Containment Barrier.	A. **ANY** condition in the opinion of the Emergency Director that indicates Potential Loss of the Containment Barrier.

Basis Information For
PWR EAL Fission Product Barrier Table 9-F-3

Developer Notes:

Use of Westinghouse Critical Safety Function Status Trees

The Emergency Response Guidelines (ERGs) developed by the Westinghouse Owners Group (WOG) define a set of Critical Safety Functions that guides the development and implementation of EOPs. The EOPs are designed to maintain and/or restore these Critical Safety Functions, and to do so in a prioritized and systematic manner. The WOG Critical Safety Functions are presented below.

- Subcriticality
- Core Cooling
- Heat Sink
- RCS Integrity
- Containment
- RCS Inventory

The WOG ERGs provide a methodology for monitoring the status of the Critical Safety Functions and classifying the significance of a challenge to a function; this methodology is referred to as the Critical Safety Function Status Trees (CSFSTs). For plants that have implemented the WOG ERGs, the guidance in NEI 99-01 allows for use of certain CSFST assessment results as EALs and fission product barrier loss/potential loss thresholds. In this manner, an emergency classification assessment may flow directly from a CSFST assessment.

It is important to note that the CSFSTs are evaluated using plant parameters, and that they are simply a vendor-specific method for collectively evaluating a set of parameters for purposes of driving emergency operating procedure usage. The parameters used to evaluate the CSFSTs that drive an emergency classification are included separately as EALs and fission product barrier loss/potential loss thresholds. For this reason, the CSFST-related EALs and thresholds <u>are redundant</u> to the parameter-based EALs and thresholds.

Inclusion of the CSFST-based loss and potential loss thresholds, as shown in the PWR EAL Fission Product Barrier Table, is optional for sites that employ the WOG ERGs. Developers at these sites should consult with classification decision-makers to determine if inclusion is desirable, i.e., would promote more timely and accurate emergency classification. Developers should consider the effects of any site-specific changes to the generic WOG CSFST evaluation logic and setpoints, as well as those arising from user rules applicable to emergency operating procedures (e.g., procedure transitions based on a CSFST color).

Since the parameter-based EALs and fission product barrier thresholds bound all conditions associated with the CSFST-based EALs and thresholds, and the resulting classifications are identical, plants that do not employ the WOG ERGs are not required to include the CSFST-based EALs and thresholds within their emergency classification scheme.

FUEL CLAD BARRIER THRESHOLDS:

The Fuel Clad Barrier consists of the cladding material that contains the fuel pellets.

1. RCS or SG Tube Leakage

There is no Loss threshold associated with RCS or SG Tube Leakage.

Potential Loss 1.A

This reading indicates a reduction in reactor vessel water level sufficient to allow the onset of heat-induced cladding damage.

Potential Loss 1.B

For plants that have implemented Westinghouse Owners Group Emergency Response Guidelines, this Critical Safety Function status is an alternate indication to Potential Loss 1.A.

Developer Notes:

Potential Loss 1.A

Enter the site-specific reactor vessel water level value(s) used by EOPs to identify a degraded core cooling condition. The reactor vessel level that corresponds to the top of active fuel may also be used. For plants that have implemented Westinghouse Owners Group Emergency Response Guidelines, the value in Potential Loss 1.A is the reactor vessel level(s) used for the Core Cooling Orange Path.

Potential Loss 1.B

For plants that have implemented Westinghouse Owners Group Emergency Response Guidelines, developers should consider including a threshold the same as, or similar to, "Core Cooling Orange entry conditions met" per the developer note concerning CSFSTs.

2. Inadequate Heat Removal

Loss 2.A

This condition indicates an extreme challenge to core cooling, i.e., temperature sufficient to cause significant superheating of reactor coolant within the core.

Loss 2.B

For plants that have implemented Westinghouse Owners Group Emergency Response Guidelines, this Critical Safety Function status is an alternate indication to Loss 2.A.

Potential Loss 2.A

This condition indicates a severe challenge to core cooling, i.e., temperature sufficient to allow the onset of heat-induced cladding damage.

Potential Loss 2.B

This condition indicates an extreme challenge to the secondary-side heat sink (i.e., ability to remove RCS heat using the steam generators) due to inadequate steam generator feed water flow and/or water inventory. This condition represents a potential loss of the Fuel Clad Barrier. The heat sink must be required for this threshold to be considered VALID.

Meeting this threshold results in a Site Area Emergency because this threshold is identical to RCS Barrier Potential Loss threshold 2.A; both will be met. This condition warrants a Site Area Emergency declaration because the loss of secondary heat sink may result in RCS heatup sufficient to damage fuel cladding and increase RCS pressure to the point where mass will be lost from the system.

Potential Loss 2.C

For plants that have implemented Westinghouse Owners Group Emergency Response Guidelines, this Critical Safety Function status is an alternate indication to Potential Loss 2.A.

Potential Loss 2.D

For plants that have implemented Westinghouse Owners Group Emergency Response Guidelines, this Critical Safety Function status is an alternate indication to Potential Loss 2.B.

Developer Notes:

Some site-specific EOPs and/or EOP user guidelines may establish decision-making criteria concerning the number or other attributes of thermocouple readings necessary to drive actions (e.g., 5 CETs reading greater than 1,200^{o}F is required before transitioning to an inadequate core cooling procedure). To maintain consistency with EOPs, these decision-making criteria may be used in the core exit thermocouple reading thresholds.

Loss 2.A

Enter a site-specific temperature value that corresponds to significant in-core superheating of reactor coolant. 1,200^{o}F may also be used.

For plants that have implemented Westinghouse Owners Group Emergency Response Guidelines, the value in Loss 2.A is the CET value used in the Core Cooling Red Path.

Loss 2.B

For plants that have implemented Westinghouse Owners Group Emergency Response Guidelines, developers should consider including a threshold the same as, or similar to, “Core Cooling Red entry conditions met” per the developer note concerning CSFSTs.

Potential Loss 2.A

Enter a site-specific temperature value that corresponds to core conditions at the onset of heat-induced cladding damage. 700°F may also be used.

For plants that have implemented Westinghouse Owners Group Emergency Response Guidelines, the value in Potential Loss 2.A is the CET value used in the Core Cooling Orange Path.

Potential Loss 2.B

An extreme challenge to RCS heat removal means that heat removal via the steam generators has (or soon will) become ineffective. An extreme challenge exists if the minimum level in the minimum number of steam generators cannot be maintained. Emergency (auxiliary) feedwater flow and/or steam generator level values should be determined based on the above description of the condition.

For plants that have implemented Westinghouse Owners Group Emergency Response Guidelines, the values in Potential Loss 2.B are those used for the Heat Sink Red Path.

Potential Loss 2.C

For plants that have implemented Westinghouse Owners Group Emergency Response Guidelines, developers should consider including a threshold the same as, or similar to, "Core Cooling Orange entry conditions met" per the developer note concerning CSFSTs.

Potential Loss 2.D

For plants that have implemented Westinghouse Owners Group Emergency Response Guidelines, developers should consider including a threshold the same as, or similar to, "Heat Sink Red entry conditions met" per the developer note concerning CSFSTs.

3. RCS Activity / Containment Radiation

Loss 3.A

The radiation monitor reading corresponds to an instantaneous release of the radioactive material inventory of the reactor coolant system (i.e., all the RCS coolant mass) into the containment, assuming that reactor coolant activity equals 300 μCi/gm dose equivalent I-131. This radioactivity concentration is several times larger than that allowed by Technical Specifications and is the same concentration that defines a loss of the Fuel Clad Barrier in threshold 3.B.

The radiation monitor reading in this threshold is higher than that specified for RCS Barrier Loss threshold 3.A since it indicates a loss of both the Fuel Clad Barrier and the RCS Barrier. Note that a combination of the two monitor readings appropriately escalates the emergency classification level to a Site Area Emergency.

Loss 3.B

This value indicates that RCS activity is 300 μCi/gm dose equivalent I-131. This level of reactor coolant activity is well above that expected for iodine spikes and corresponds to an approximate range of 2% to 5% fuel clad damage. Since this condition indicates that a significant amount of clad damage has occurred, it represents a loss of the Fuel Clad Barrier.

It is recognized that RCS sampling and analysis activities, particularly those involving samples with elevated activity levels, could require several hours to complete. Nonetheless, a sample-related threshold is included as a backup to other indications.

There is no Potential Loss threshold associated with RCS Activity / Containment Radiation.

Developer Notes:

Loss 3.A

The reading should be calculated assuming the instantaneous release and dispersal of the reactor coolant noble gas and iodine inventory, with RCS activity equal to 300 μCi/gm dose equivalent I-131, into the containment atmosphere.

Loss 3.B

The reading should be calculated assuming RCS activity equals 300 μCi/gm dose equivalent I-131. For plants that have the ability to detect this level of fuel clad damage with installed radiation monitors, consideration should be given to using radiation monitor readings in addition to sample analysis results for this threshold.

4. Containment Integrity or Bypass

Not Applicable (included for numbering consistency)

5. Other Indications

Loss and/or Potential Loss 5.A

This subcategory addresses other site-specific thresholds that may be included to indicate loss or potential loss of the Fuel Clad barrier based on plant-specific design characteristics not considered in the generic guidance.

Developer Notes:

Loss and/or Potential Loss 5.A

Developers should determine if other reliable indicators exist to evaluate the status of this fission product barrier (e.g., review accident analyses described in the site Final Safety Analysis Report, as updated). The goal is to identify any unique or site-specific indications that will promote timely and accurate assessment of barrier status.

Any added thresholds should represent approximately the same relative threat to the barrier as the other thresholds in this column. Basis information for the other thresholds may be used to gauge the relative barrier threat level.

6. Emergency Director Judgment

Loss 6.A

This threshold addresses any other factors that may be used by the Emergency Director in determining whether the Fuel Clad Barrier is lost.

Potential Loss 6.A

This threshold addresses any other factors that may be used by the Emergency Director in determining whether the Fuel Clad Barrier is potentially lost. The Emergency Director should also consider whether or not to declare the barrier potentially lost in the event that barrier status cannot be monitored.

Developer Notes:

None

RCS BARRIER THRESHOLDS:

The Reactor Coolant System (RCS) Barrier includes the RCS primary side and its connections up to and including the pressurizer safety and relief valves, and other connections up to and including the primary isolation valves.

1. RCS or SG Tube Leakage

Loss 1.A

This threshold is based on an RCS leak of sufficient size to require an automatic or manual actuation of the Emergency Core Cooling System (ECCS). The RCS leak must be UNISOLABLE. This condition clearly represents a loss of the RCS Barrier.

This threshold is applicable to unidentified and pressure boundary leakage, as well as identified leakage. The mass loss may be into any location – inside containment, to the secondary-side (i.e., steam generator tube leakage) or outside of containment.

If a leaking steam generator is also FAULTED outside of containment, the declaration escalates to a Site Area Emergency since the Containment Barrier Loss threshold 1.A will also be met.

Potential Loss 1.A

This threshold is based on an RCS leak that results in the inability to maintain pressurizer level within specified limits by operation of a normally used charging (makeup) pump, but an ECCS (SI) actuation has not occurred. The RCS leak must be UNISOLABLE. The threshold is met when an operating procedure, or operating crew supervision, directs that a standby charging (makeup) pump be placed in service to restore and maintain pressurizer level.

This threshold is applicable to unidentified and pressure boundary leakage, as well as identified leakage. The mass loss may be into any location – inside containment, to the secondary-side (i.e., steam generator tube leakage) or outside of containment.

If a leaking steam generator is also FAULTED outside of containment, the declaration escalates to a Site Area Emergency since the Containment Barrier Loss threshold 1.A will also be met.

Potential Loss 1.B

This condition indicates an extreme challenge to the integrity of the RCS pressure boundary due to pressurized thermal shock – a transient that causes rapid RCS cooldown while the RCS is in Mode 3 or higher (i.e., hot and pressurized).

Potential Loss 1.C

For plants that have implemented Westinghouse Owners Group Emergency Response Guidelines, this Critical Safety Function status is an alternate indication to Potential Loss 1.B.

Developer Notes:

Loss 1.A

Actuation of the ECCS may also be referred to as Safety Injection (SI) actuation or other appropriate site-specific term.

Potential Loss 1.A

For plants with low capacity charging pumps (i.e., <50 gpm), a 50 gpm RCS leak rate may be used as an alternate Potential Loss threshold value.

Potential Loss 1.B

Enter site-specific parameter values that define an extreme challenge to the integrity of the RCS pressure boundary due to pressurized thermal shock – a transient that causes rapid RCS cooldown while the RCS is in Mode 3 or higher (i.e., hot and pressurized). For plants that have implemented Westinghouse Owners Group Emergency Response Guidelines, the values in Potential Loss 1.B are those used for the RCS Integrity Red Path.

Potential Loss 1.C

For plants that have implemented Westinghouse Owners Group Emergency Response Guidelines, developers should consider including a threshold the same as, or similar to, "RCS Integrity Red entry conditions met" per the developer note concerning CSFSTs.

2. Inadequate Heat Removal

There is no Loss threshold associated with Inadequate Heat Removal.

Potential Loss 2.A

This condition indicates an extreme challenge to the secondary-side heat sink (i.e., ability to remove RCS heat using the steam generators) due to inadequate steam generator feed water flow and/or water inventory. This condition represents a potential loss of the RCS Barrier. The heat sink must be required for this threshold to be considered VALID.

Meeting this threshold results in a Site Area Emergency because this threshold is identical to Fuel Clad Barrier Potential Loss threshold 2.B; both will be met. This condition warrants a Site Area Emergency declaration because the loss of secondary heat sink may result in RCS heatup sufficient to damage fuel cladding and increase RCS pressure to the point where mass will be lost from the system.

Potential Loss 2.B

For plants that have implemented Westinghouse Owners Group Emergency Response Guidelines, this Critical Safety Function status is an alternate indication to Potential Loss 2.A.

Developer Notes:

Potential Loss 2.A

An extreme challenge to RCS heat removal means that heat removal via the steam generators has (or soon will) become ineffective. An extreme challenge exists if the minimum level in the minimum number of steam generators cannot be maintained. Emergency (auxiliary) feedwater flow and/or steam generator level values should be determined based on the above description of the condition.

For plants that have implemented Westinghouse Owners Group Emergency Response Guidelines, the values in Potential Loss 2.A are those used for the Heat Sink Red Path.

Potential Loss 2.B

For plants that have implemented Westinghouse Owners Group Emergency Response Guidelines, developers should consider including a threshold the same as, or similar to, "Heat Sink Red entry conditions met" per the developer note concerning CSFSTs.

3. RCS Activity / Containment Radiation

Loss 3.A

The radiation monitor reading corresponds to an instantaneous release of the radioactive material inventory of the reactor coolant system (i.e., all the RCS coolant mass) into the containment, assuming that RCS activity is at Technical Specification allowable limits. This value is lower than that specified for Fuel Clad Barrier Loss threshold 3.A since it indicates a loss of the RCS Barrier only.

There is no Potential Loss threshold associated with RCS Activity / Containment Radiation.

Developer Notes:

Loss 3.A

The reading should be calculated assuming the instantaneous release and dispersal of the reactor coolant noble gas and iodine inventory, with RCS activity at Technical Specification allowable limits, into the containment atmosphere. Using RCS activity at Technical Specification allowable limits aligns this threshold with IC SU4. Also, RCS activity at his level will typically result in containment radiation levels that can be more readily detected by containment radiation monitors, and more readily differentiated from those caused by piping or component "shine" sources. If desired, a plant may use a lesser value of RCS activity for determining this value.

In some cases, the site-specific physical location and sensitivity of the containment radiation monitor(s) may be such that radiation from a cloud of released RCS gases cannot be distinguished from radiation emanating from piping and components containing elevated reactor coolant activity. If so, refer to the Developer Guidance for Loss/Potential Loss 5.A and determine if an alternate indication is available.

4. Containment Integrity or Bypass

Not Applicable (included for numbering consistency)

5. Other Indications

Loss and/or Potential Loss 5.A

This subcategory addresses other site-specific thresholds that may be included to indicate loss or potential loss of the RCS barrier based on plant-specific design characteristics not considered in the generic guidance.

Developer Notes:

Loss and/or Potential Loss 5.A

Developers should determine if other reliable indicators exist to evaluate the status of this fission product barrier (e.g., review accident analyses described in the site Final Safety Analysis Report, as updated). The goal is to identify any unique or site-specific indications that will promote timely and accurate assessment of barrier status.

Any added thresholds should represent approximately the same relative threat to the barrier as the other thresholds in this column. Basis information for the other thresholds may be used to gauge the relative barrier threat level.

6. Emergency Director Judgment

Loss 6.A

This threshold addresses any other factors that may be used by the Emergency Director in determining whether the RCS Barrier is lost.

Potential Loss 6.A

This threshold addresses any other factors that may be used by the Emergency Director in determining whether the RCS Barrier is potentially lost. The Emergency Director should also consider whether or not to declare the barrier potentially lost in the event that barrier status cannot be monitored.

Developer Notes:

None

CONTAINMENT BARRIER THRESHOLDS:

The Containment Barrier includes the containment building and connections up to and including the outermost containment isolation valves. This barrier also includes the main steam, feedwater, and blowdown line extensions outside the containment building up to and including the outermost secondary side isolation valve.

1. RCS or SG Tube Leakage

Loss 1.A

This threshold addresses a leaking Steam Generator (SG) that is also FAULTED outside of containment. This condition represents a bypass of the containment barrier. FAULTED is a defined term within the NEI 99-01 methodology; this determination is not necessarily dependent upon entry into, or diagnostic steps within, an EOP. For example, if the pressure in a steam generator is decreasing uncontrollably [*part of the FAULTED definition*] and the faulted steam generator isolation procedure is not entered because EOP user rules are dictating implementation of another procedure to address a higher priority condition, the steam generator is still considered FAULTED for emergency classification purposes.

The FAULTED criterion sets the lower bound on the size of a steam release that may require an emergency classification. The lower bound for this aspect of the containment barrier is analogous to the lower bound criteria specified in IC SU3 for the fuel clad barrier (i.e., RCS activity values) and IC SU4 for the RCS barrier (i.e., RCS leak rate values).

This threshold also applies to prolonged steam releases necessitated by operational considerations such as the forced steaming of a leaking steam generator directly to atmosphere to cooldown the plant, or to drive an auxiliary (emergency) feed water pump. These types of conditions will result in a significant and sustained release of radioactive steam to the environment (and are thus similar to a FAULTED condition). The inability to isolate the steam flow without an adverse effect on plant cooldown meets the intent of a loss of containment.

Steam releases associated with the expected operation of a SG power operated relief valve or safety relief valve do not meet the intent of this threshold. Such releases may occur intermittently for a short period of time following a reactor trip as operators process through emergency operating procedures to bring the plant to a stable condition and prepare to initiate a plant cooldown.

If the main condenser is available, there may be minor releases via air ejectors, gland seal exhausters, and other similar pathways. These types of releases do not meet the intent of this threshold; rather, they are assessed using the Category A ICs dealing with radiological releases.

The emergency classification levels resulting from primary-to-secondary leakage, with or without a steam release from the FAULTED SG, are summarized below.

	Affected SG is FAULTED Outside of Containment?	
P-to-S Leak Rate	**Yes**	**No**
Less than or equal to 25 gpm	No classification	No classification
Greater than 25 gpm	Unusual Event per SU4	Unusual Event per SU4
Requires operation of a standby charging (makeup) pump (*RCS Barrier Potential Loss*)	Site Area Emergency per FS1	Alert per FA1
Requires an automatic or manual ECCS (SI) actuation (*RCS Barrier Loss*)	Site Area Emergency per FS1	Alert per FA1

There is no Potential Loss threshold associated with RCS or SG Tube Leakage.

Developer Notes:

Loss 1.A

A steam generator power operated relief valve may also be referred to as an atmospheric steam dump valve or other appropriate site-specific term.

Developers may include an additional site-specific threshold(s) to address prolonged steam releases necessitated by operational considerations if EOPs could require that a leaking steam generator be used to support plant cooldown.

Developers may wish to consider incorporating the above table into their site-specific fission product barrier table.

2. Inadequate Heat Removal

There is no Loss threshold associated with Inadequate Heat Removal.

Potential Loss 2.A

This condition represents an IMMINENT core melt sequence which, if not corrected, could lead to vessel failure and an increased potential for containment failure. For this condition to occur, there must already have been a loss of the RCS Barrier and the Fuel Clad Barrier. If implementation of a procedure(s) to restore adequate core cooling is not effective (successful) within 15 minutes, it is assumed that the event trajectory will likely lead to core melting and a subsequent challenge of the Containment Barrier.

The restoration procedure is considered “effective” if core exit thermocouple readings are decreasing and/or if reactor vessel level is increasing. Whether or not the procedure(s) will be effective should be apparent within 15 minutes. The Emergency Director should

escalate the emergency classification level as soon as it is determined that the procedure(s) will not be effective.

Potential Loss 2.B

For plants that have implemented Westinghouse Owners Group Emergency Response Guidelines, this Critical Safety Function status is an alternate indication to Potential Loss 2.A.

Severe accident analyses (e.g., NUREG-1150) have concluded that function restoration procedures can arrest core degradation in a significant fraction of core damage scenarios, and that the likelihood of containment failure is very small in these events. Given this, it is appropriate to provide 15 minutes beyond the required entry point to determine if procedural actions can reverse the core melt sequence.

Developer Notes:

Some site-specific EOPs and/or EOP user guidelines may establish decision-making criteria concerning the number or other attributes of thermocouple readings necessary to drive actions (e.g., 5 CETs reading greater than 1,200^{o}F is required before transitioning to an inadequate core cooling procedure). To maintain consistency with EOPs, these decision-making criteria may be used in the core exit thermocouple reading thresholds.

Potential Loss 2.A

List site-specific criteria for entry into core cooling restoration procedure. A 1,200^{o}F reading on the CETs may also be used.

For plants that have implemented Westinghouse Owners Group Emergency Response Guidelines, the values in Potential Loss 2.A are those used in the Core Cooling Red Path.

Potential Loss 2.B

For plants that have implemented Westinghouse Owners Group Emergency Response Guidelines, developers should consider including a threshold the same as, or similar to, "Core Cooling Red entry conditions met for 15 minutes or longer" per the developer note concerning CSFSTs.

3. RCS Activity / Containment Radiation

There is no Loss threshold associated with RCS Activity / Containment Radiation.

Potential Loss 3.A

The radiation monitor reading corresponds to an instantaneous release of the radioactive material inventory of the reactor coolant system (i.e., all the RCS coolant mass) into the containment, assuming that 20% of the fuel cladding has failed. This level of assumed fuel damage is well beyond that used to determine the analogous Fuel Clad Barrier Loss and RCS Barrier Loss thresholds.

Approximately 20% of the fuel cladding must fail in order for there to be a major release of radioactivity requiring offsite protection actions. For this condition to occur, there must already have been a loss of the RCS Barrier and the Fuel Clad Barrier. It is therefore prudent to treat this condition as a potential loss of containment which would then escalate the emergency classification level to a General Emergency.

Developer Notes:

Potential Loss 3.A

NUREG-1228, *Source Estimations During Incident Response to Severe Nuclear Power Plant Accidents*, provides the basis for using the 20% fuel cladding failure value. Unless there is a site-specific analysis justifying a different value, it is recommended that the calculated radiation monitor reading correspond to 20% fuel clad failure.

4. Containment Integrity or Bypass

Loss 4.A

This threshold addresses a situation where containment isolation is required and one of two conditions exists.

4.A.1 – Despite the containment isolation, radioactive material in the containment is escaping to an in-plant location outside of containment. For example, radioactive material may be entering an auxiliary building due to containment leakage (from a penetration) or through leakage in an in-service system (from a mechanical connection). Leakage of this type will be most readily detected by in-plant radiation monitors. Depending upon a variety of factors, this condition may or may not be accompanied by a noticeable drop in containment pressure.

Refer to the middle piping run of Figure 9-F-4. Two simplified examples are provided. One is leakage from a penetration and the other is leakage from an in-service system valve. Depending upon radiation monitor locations and sensitivities, the leakage could be detected by any of the four monitors.

4.A.2 – Conditions are such that there is an UNISOLABLE pathway for the migration of radioactive material from the containment to a point outside of the containment where the material can enter, or become entrained in, a ventilation system flow path that ultimately exhausts to the environment. Depending upon a variety of factors, this condition may or may not be accompanied by a noticeable drop in containment pressure.

Refer to the top piping run of Figure 9-F-4. In this simplified example, the inboard and outboard isolation valves remained open after a containment isolation was required (i.e., containment isolation was not successful). There is now an UNISOLABLE pathway from the containment to the environment.

The existence of a filter is not considered in the threshold assessment. Filters do not remove fission product noble gases. In addition, a filter could become ineffective due to iodine and/or particulate loading beyond design limits (i.e., retention ability has been exceeded) or water saturation from steam/high humidity in the release stream.

Leakage between two interfacing liquid systems, by itself, does not meet this threshold.

Refer to the bottom piping run of Figure 9-F-4. In this simplified example, leakage in an RCP seal cooler is allowing radioactive material to enter the Auxiliary Building. The radioactivity would be detected by the Process Monitor. If there is no leakage from the closed water cooling system to the Auxiliary Building, then no threshold has been met. If the pump developed a leak that allowed steam/water to enter the Auxiliary Building, then threshold 4.B would be met. Depending upon radiation monitor locations and sensitivities, this leakage could be detected by any of the four monitors and cause threshold 4.A.1 to be met as well.

This threshold is not applicable to conditions involving primary-to-secondary (i.e., steam generator) leakage. The status of the containment barrier under those conditions is assessed using Loss Threshold 1.A.

Loss 4.B

Containment sump, temperature, pressure and/or radiation levels will increase if reactor coolant mass is leaking into the containment. If these parameters have not increased, then the reactor coolant mass may be leaking outside of containment (i.e., a containment bypass sequence). Increases in sump, temperature, pressure, flow and/or radiation level readings outside of the containment may indicate that the RCS mass is being lost outside of containment

Unexpected elevated readings and alarms on radiation monitors with detectors outside containment should be corroborated with other available indications to confirm that the source is a loss of RCS mass outside of containment. If the fuel clad barrier has not been lost, radiation monitor readings outside of containment may not increase significantly; however, other unexpected changes in sump levels, area temperatures or pressures, flow rates, etc. should be sufficient to determine if RCS mass is being lost outside of the containment.

Refer to the middle piping run of Figure 9-F-4. In this simplified example, a leak has occurred at a reducer on a pipe carrying reactor coolant in the Auxiliary Building. Depending upon radiation monitor locations and sensitivities, the leakage could be detected by any of the four monitors and cause threshold 4.A.1 to be met as well.

To ensure proper escalation of the emergency classification, the RCS mass being lost outside of containment must be related to the mass loss that is causing the RCS Loss and/or Potential Loss threshold 1.A to be met.

Potential Loss 4.A

If containment pressure exceeds the design pressure, there exists a potential to lose the Containment Barrier. To reach this level, there must be an inadequate core cooling condition for an extended period of time; therefore, the RCS and Fuel Clad barriers would already be lost. Thus, this threshold is a discriminator between a Site Area Emergency and General Emergency since there is now a potential to lose the third barrier.

Potential Loss 4.B

The existence of an explosive mixture means, at a minimum, that the containment atmospheric hydrogen concentration is sufficient to support a hydrogen burn (i.e., at the lower deflagration limit). A hydrogen burn will raise containment pressure and could result in collateral equipment damage leading to a loss of containment integrity. It therefore represents a potential loss of the Containment Barrier.

Potential Loss 4.C

This threshold describes a condition where containment pressure is greater than the setpoint at which containment energy (heat) removal systems are designed to automatically actuate, and less than one full train of equipment is capable of operating per design. This threshold represents a potential loss of containment in that containment heat removal/depressurization systems (e.g., containment sprays, ice condenser fans, etc., but not including containment venting strategies) are either lost or performing in a degraded manner.

Potential Loss 4.D

For plants that have implemented Westinghouse Owners Group Emergency Response Guidelines, this Critical Safety Function status is an alternate indication to Potential Loss 4.A.

Developer Notes:

Loss 4.A.1

Developers may include a list of site-specific radiation monitors to assist with better defining this threshold. For example, the threshold might read "UNPLANNED rise in one or more of the following radiation monitors outside containment indicating a loss of containment integrity (site-specific list of monitors)".

Potential Loss 4.A

The site-specific pressure is the containment design pressure.

For plants that have implemented Westinghouse Owners Group Emergency Response Guidelines, the pressure value in Potential Loss 4.A is that used for the Containment Red Path.

Potential Loss 4.B

Developers may enter the minimum containment atmospheric hydrogen concentration necessary to support a hydrogen burn (i.e., the lower deflagration limit). A concurrent containment oxygen concentration may be included if the plant has this indication available in the Control Room.

Potential Loss 4.C

This threshold is not applicable to the U.S. Evolutionary Power Reactor (EPR) design.

Potential Loss 4.D

For plants that have implemented Westinghouse Owners Group Emergency Response Guidelines, developers should consider including a threshold the same as, or similar to, "Containment Red entry conditions met" per the developer note concerning CSFSTs.

5. Other Indications

Loss and/or Potential Loss 5.A

This subcategory addresses other site-specific thresholds that may be included to indicate loss or potential loss of the Containment barrier based on plant-specific design characteristics not considered in the generic guidance.

Developer Notes:

Loss and/or Potential Loss 5.A

If site emergency operating procedures provide for venting of the containment as a means of preventing catastrophic failure, a Loss threshold should be included for the containment barrier. This threshold would be met as soon as such venting is IMMINENT. Containment venting as part of recovery actions is classified in accordance with the radiological effluent ICs.

Developers should determine if other reliable indicators exist to evaluate the status of this fission product barrier (e.g., review accident analyses described in the site Final Safety Analysis Report, as updated). The goal is to identify any unique or site-specific indications that will promote timely and accurate assessment of barrier status.

Any added thresholds should represent approximately the same relative threat to the barrier as the other thresholds in this column. Basis information for the other thresholds may be used to gauge the relative barrier threat level.

6. Emergency Director Judgment

Loss 6.A

This threshold addresses any other factors that may be used by the Emergency Director in determining whether the Containment Barrier is lost.

Potential Loss 6.A

This threshold addresses any other factors that may be used by the Emergency Director in determining whether the Containment Barrier is potentially lost. The Emergency

Director should also consider whether or not to declare the barrier potentially lost in the event that barrier status cannot be monitored.

Developer Notes:

None

Figure 9-F-4: PWR Containment Integrity or Bypass Examples

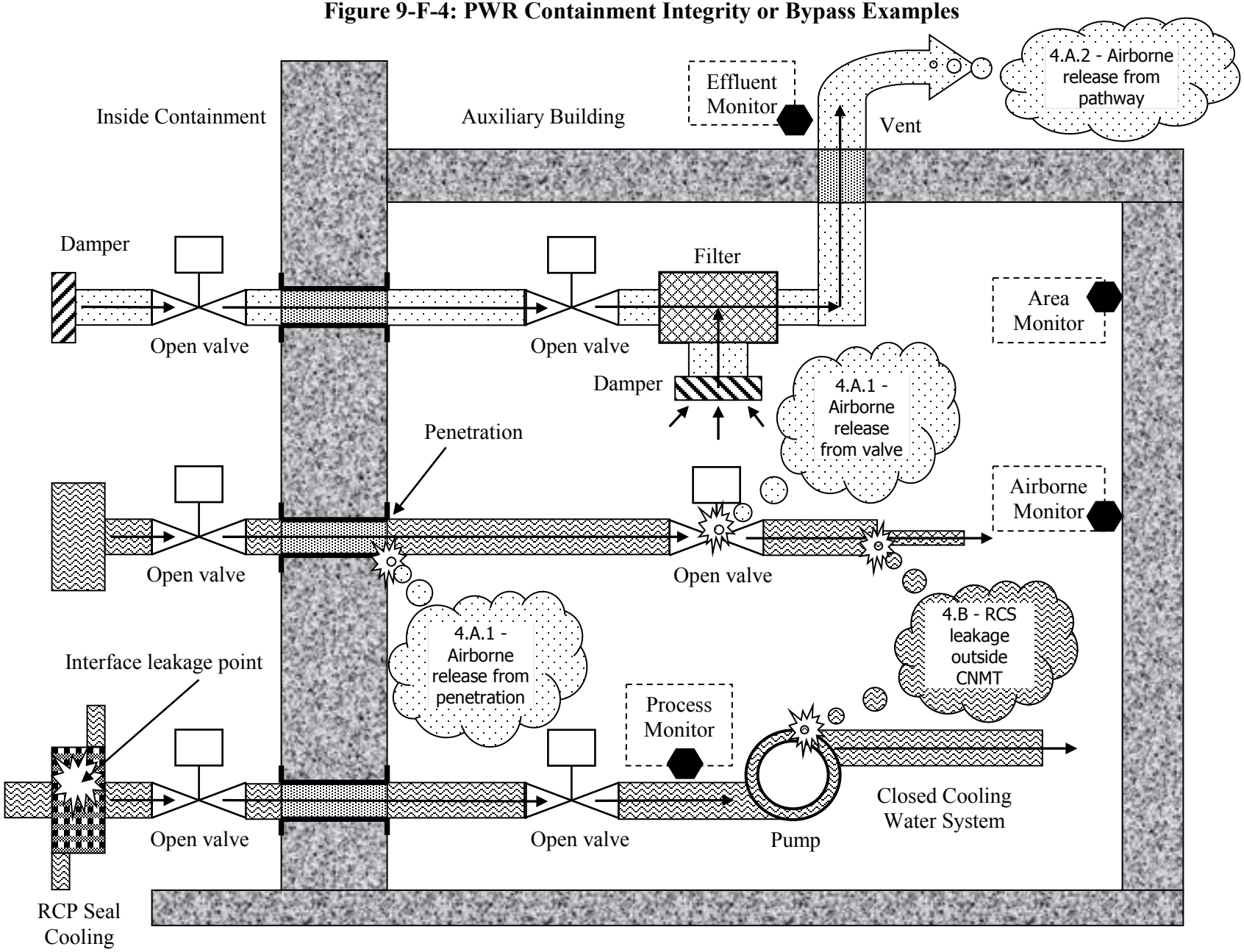

10 HAZARDS AND OTHER CONDITIONS AFFECTING PLANT SAFETY ICS/EALS

Table H-1: Recognition Category "H" Initiating Condition Matrix

UNUSUAL EVENT	ALERT	SITE AREA EMERGENCY	GENERAL EMERGENCY
HU1 Confirmed SECURITY CONDITION or threat. *Op. Modes: All*	**HA1** HOSTILE ACTION within the OWNER CONTROLLED AREA or airborne attack threat within 30 minutes. *Op. Modes: All*	**HS1** HOSTILE ACTION within the PROTECTED AREA. *Op. Modes: All*	**HG1** HOSTILE ACTION resulting in loss of a key safety function or damage to spent fuel. *Op. Modes: All*
	HA2 SEISMIC EVENT affecting safety systems. *Op.* Modes*: All*		
	HA3 FIRE affecting safety systems. *Op.* Modes*: All*		
	HA4 EXPLOSION affecting safety systems. *Op.* Modes*: All*		
	HA5 Gas release impeding access to safety systems. *Op.* Modes*: All*		
	HA6 Severe weather or flooding affecting safety systems. *Op.* Modes*: All*		
	HA7 Plant control transferred to locations outside the Control Room. *Op.* Modes*: All*	**HS7** Inability to control a key safety function from outside the Control Room. *Op. Modes: All*	
HU8 Other conditions exist which in the judgment of the Emergency Director warrant declaration of a (NO)UE. *Op. Modes: All*	**HA8** Other conditions exist which in the judgment of the Emergency Director warrant declaration of an Alert. *Op. Modes: All*	**HS8** Other conditions exist which in the judgment of the Emergency Director warrant declaration of a Site Area Emergency. *Op.* Modes*: All*	**HG8** Other conditions exist which in the judgment of the Emergency Director warrant declaration of a General Emergency. *Op.* Modes*: All*

HU1

Initiating Condition - NOTIFICATION OF UNUSUAL EVENT

Confirmed SECURITY CONDITION or threat.

Operating Mode Applicability: All

Example Emergency Action Levels: (1 or 2 or 3)

(1) A SECURITY CONDITION that does not involve a HOSTILE ACTION as reported by the (site-specific security shift supervision).

(2) Notification of a credible security threat directed at the site.

(3) A validated notification from the NRC providing information of an aircraft threat.

Basis:

These events pose a threat to the safety of plant personnel, and possibly to safety system equipment as well. Security events which do not represent a potential degradation in the level of safety of the plant are adequately addressed by the requirements of 10 CFR § 73.71 or 10 CFR § 50.72. Security events assessed as HOSTILE ACTIONS are classifiable under ICs HA1, HS1 and HG1.

Timely and accurate communications between Security Shift Supervision and the Control Room is essential for proper classification of a security-related event. Classification of these events will initiate appropriate threat-related notifications to plant personnel and OROs.

Security plans and terminology are based on the guidance provided by NEI 03-12, *Template for the Security Plan, Training and Qualification Plan, Safeguards Contingency Plan [and Independent Spent Fuel Storage Installation Security Program]*.

EAL #1 references (site-specific security shift supervision) because these are the individuals trained to confirm that a security event is occurring or has occurred. Training on security event confirmation and classification is controlled due to the nature of Safeguards and 10 CFR § 2.39 information.

EAL #2 addresses the receipt of a credible security threat. The credibility of the threat is assessed in accordance with (site-specific procedure).

EAL #3 addresses the threat from the impact of an aircraft on the plant. The NRC Headquarters Operations Officer (HOO) will communicate to the licensee if the threat involves an aircraft. The status and size of the plane may also be provided by NORAD through the NRC. Validation of the threat is performed in accordance with (site-specific procedure).

EALs should not incorporate Security-sensitive information. This includes information that may be advantageous to a potential adversary, such as the particulars concerning a specific threat or threat location.

Escalation to the Alert emergency classification level would be via IC HA1.

ECL Assignment Attributes: 3.1.1.A

Developer Notes:

The (site-specific security shift supervision) is the title of the on-shift individual responsible for supervision of the on-shift security force.

The (site-specific procedure) is the procedure(s) used by Control Room and/or Security personnel to determine if a security threat is credible, and to validate receipt of aircraft threat information.

EALs should not incorporate Security-sensitive information. This includes information that may be advantageous to a potential adversary, such as the particulars concerning a specific threat or threat location.

HU8

Initiating Condition - NOTIFICATION OF UNUSUAL EVENT

Other conditions exist which in the judgment of the Emergency Director warrant declaration of a (NO)UE.

Operating Mode Applicability: All

Example Emergency Action Levels:

(1) Other conditions exist which in the judgment of the Emergency Director indicate that events are in progress or have occurred which indicate a potential degradation of the level of safety of the plant or indicate a security threat to facility protection has been initiated. No releases of radioactive material requiring offsite response or monitoring are expected unless further degradation of safety systems occurs.

Basis:

This EAL addresses unanticipated conditions not addressed explicitly elsewhere but that warrant declaration of an emergency because conditions exist which are believed by the Emergency Director to fall under the emergency classification level description for a NOUE.

HA1

Initiating Condition - ALERT

HOSTILE ACTION within the OWNER CONTROLLED AREA or airborne attack threat within 30 minutes.

Operating Mode Applicability: All

Example Emergency Action Levels: (1 or 2)

(1) A HOSTILE ACTION is occurring or has occurred within the OWNER CONTROLLED AREA as reported by the (site-specific security shift supervision).

(2) A validated notification from NRC of an aircraft attack threat within 30 minutes of the site.

Basis:

This IC addresses the potential for 1) a very rapid progression of events due to a HOSTILE ACTION within the OWNER CONTROLLED AREA (i.e., the event could quickly progress to an attack on the PROTECTED AREA), or 2) wide-area damage from an aircraft impact. Either event will require rapid assistance due to the possibility for significant and/or indeterminate damage to equipment, and casualties among the plant staff.

Timely and accurate communications between Security Shift Supervision and the Control Room is essential for proper classification of a security-related event.

Security plans and terminology are based on the guidance provided by NEI 03-12, *Template for the Security Plan, Training and Qualification Plan, Safeguards Contingency Plan [and Independent Spent Fuel Storage Installation Security Program]*.

As time and conditions allow, these events require a heightened state of readiness by the plant staff and implementation of onsite protective measures (e.g., evacuation, dispersal or sheltering). The Alert declaration will also heighten the awareness of Offsite Response Organizations, allowing them to be better prepared should it be necessary to consider further actions.

This IC does not apply to incidents that are accidental events, acts of civil disobedience, or otherwise are not a HOSTILE ACTION perpetrated by a HOSTILE FORCE. Examples include the crash of a small aircraft, shots from hunters, physical disputes between employees within the PROTECTED AREA, etc. Reporting of these types of events is adequately addressed by other EALs, or the requirements of 10 CFR § 73.71 or 10 CFR § 50.72.

EAL #1 is applicable for any HOSTILE ACTION occurring, or that has occurred, in the OWNER CONTROLLED AREA. This includes any action directed against an ISFSI that is located within the OWNER CONTROLLED AREA.

EAL #2 addresses the threat from the impact of an aircraft on the plant, and the anticipated arrival time is within 30 minutes. The intent of this EAL is to ensure that threat-related notifications are made in a timely manner so that plant personnel and OROs are in a heightened

state of readiness. This EAL is met when the threat-related information has been validated in accordance with (site-specific procedure).

The NRC Headquarters Operations Officer (HOO) will communicate to the licensee if the threat involves an aircraft. The status and size of the plane may be provided by NORAD through the NRC.

In some cases, it may not be readily apparent if an aircraft impact within the OWNER CONTROLLED AREA was intentional (i.e., a HOSTILE ACTION). It is expected, although not certain, that notification by an appropriate Federal agency to the site would clarify this point. In this case, the appropriate federal agency is intended to be NORAD, FBI, FAA or NRC. The emergency declaration, including one based on other ICs/EALs, should not be unduly delayed while awaiting notification by a Federal agency.

EALs should not incorporate Security-sensitive information. This includes information that may be advantageous to a potential adversary, such as the particulars concerning a specific threat or threat location.

ECL Assignment Attributes: 3.1.2.D

Developer Notes:

The (site-specific security shift supervision) is the title of the on-shift individual responsible for supervision of the on-shift security force.

EALs should not incorporate Security-sensitive information. This includes information that may be advantageous to a potential adversary, such as the particulars concerning a specific threat or threat location.

HA2

Initiating Condition - ALERT

SEISMIC EVENT affecting safety systems.

Operating Mode Applicability: All

Example Emergency Action Levels:

(1) a. **ANY** of the following:

1. Vibratory ground motion is felt and recognized as an earthquake based on a consensus of control room operators on duty at the time.

OR

2. Both of the following:

a) Vibratory ground motion detected by (site-specific seismic monitoring instrumentation).

AND

b) The occurrence of an earthquake is confirmed through contact with the National Earthquake Information Center or other source deemed credible by the Emergency Director (e.g., a regional seismic monitoring agency, news media reports, etc.).

AND

b. **ANY** of the following:

- Reports of VISIBLE DAMAGE to **ANY** of the following structures or areas:

  (site-specific list)

- Control Room indication of degraded performance of more than one train of a safety system or more than one safety system.

- Damage report of sufficient magnitude to conclude that more than one train of a safety system or more than one system cannot perform their intended design function.

Basis:

This IC represents damage of sufficient magnitude to potentially challenge the integrity of a fission product barrier (i.e., a precursor to a potential loss or loss of a barrier); therefore, this condition is an actual or potential substantial degradation of the level of safety of the plant.

VISIBLE DAMAGE is used to differentiate between an event that causes minor damage and one that has the potential to damage safety systems. The declaration of an Alert and the activation of the Technical Support Center and Operational Support Center will provide the Emergency Director with the resources necessary to perform detailed damage assessments.

Safety systems are those systems required for safe plant operation, cooling down the unit and placing it in the cold shutdown condition. These systems include the ECCS; on-site emergency AC and DC power sources and distribution systems; and associated support systems necessary for operation.

Degraded performance is indicated if the affected trains and/or systems are unable to perform their intended design functions.

Escalation of the emergency classification would be based on the Recognition Category A, C or F ICs.

ECL Assignment Attributes: 3.1.2.B

Developer Notes:

For EAL #1.a.2.a) - This EAL statement should be based on the capabilities, alarms and displays of site-specific seismic monitoring equipment.

The "site-specific list" should specify those structures or areas that contain components of safety systems. Safety systems are those systems required for safe plant operation, cooling down the unit and placing it in the cold shutdown condition. These systems include the ECCS; on-site emergency AC and DC power sources and distribution systems; and associated support systems necessary for operation.

Per attribute 3.1.2(B), an event or condition corresponding to the Alert classification must be of sufficient magnitude that it that significantly reduces the margin to a loss or potential loss of the fuel clad or RCS fission product barrier. The risks and consequences associated with this attribute are thus aligned with those of attribute 3.1.2(A), i.e., a loss or potential loss of either the fuel clad or RCS fission product barrier. The events and conditions classified under attribute 3.1.2(B) must therefore be precursors that could readily or reasonably lead to outcomes classified under attribute 3.1.2(A).

Nuclear power plant safety-related systems are typically comprised of two or more separate and redundant trains of equipment. A loss of one train of safety-related equipment due to an event or condition does not significantly increase risk nor threaten any greater consequence because there is at least one additional train to perform the safety-related function. This situation does not reflect the Alert definition wording of events "which involve an actual or potential substantial degradation of the level of safety of the plant".

If an event or condition were to adversely affect the performance of more than one train of a safety-related system, then the safety-related function performed by that system could be compromised. It was also recognized that one or more safety-related functions could be degraded or lost if multiple safety-related systems were concurrently impacted (regardless of how many individual trains were lost). The Alert declaration required by this IC reflects these

considerations using criteria that may be evaluated within the allowable 15-minute emergency classification assessment period.

HA3

Initiating Condition - ALERT

FIRE affecting safety systems.

Operating Mode Applicability: All

Example Emergency Action Levels: (1 or 2)

(1) FIRE resulting in **ANY** of the following:

- Reports of VISIBLE DAMAGE to **ANY** of the following structures or areas:

  (site-specific list)

- Control Room indication of degraded performance of more than one train of a safety system or more than one safety system.

- Damage report of sufficient magnitude to conclude that more than one train of a safety system or more than one system cannot perform their intended design function.

(2) FIRE in **ANY** of the following structures or areas not extinguished within 30 minutes of the Control Room directing deployment of the Fire Brigade.

(site-specific list)

Basis:

This IC represents damage of sufficient magnitude to potentially challenge the integrity of a fission product barrier (i.e., a precursor to a potential loss or loss of a barrier); therefore, this condition is an actual or potential substantial degradation of the level of safety of the plant.

VISIBLE DAMAGE is used to differentiate between an event that causes minor damage and one that has the potential to damage safety systems. The declaration of an Alert and the activation of the Technical Support Center and Operational Support Center will provide the Emergency Director with the resources necessary to perform detailed damage assessments.

Safety systems are those systems required for safe plant operation, cooling down the unit and placing it in the cold shutdown condition. These systems include the ECCS; on-site emergency AC and DC power sources and distribution systems; and associated support systems necessary for operation.

Degraded performance is indicated if the affected trains and/or systems are unable to perform their intended design functions.

EAL #2 is intended to address a situation where the potentially affected safety system equipment is not in-service, other indications of degraded performance are not available, and the damage report necessary to evaluate EAL #1 is still not available or inconclusive 30 minutes after the Control Room directed deployment of the Fire Brigade.

Escalation of the emergency classification would be based on the Recognition Category A, C or F ICs.

ECL Assignment Attributes: 3.1.2.B

Developer Notes:

The "site-specific list", in both instances, should specify those structures or areas that contain components of safety systems. Safety systems are those systems required for safe plant operation, cooling down the unit and placing it in the cold shutdown condition. These systems include the ECCS; on-site emergency AC and DC power sources and distribution systems; and associated support systems necessary for operation.

Per attribute 3.1.2(B), an event or condition corresponding to the Alert classification must be of sufficient magnitude that it that significantly reduces the margin to a loss or potential loss of the fuel clad or RCS fission product barrier. The risks and consequences associated with this attribute are thus aligned with those of attribute 3.1.2(A), i.e., a loss or potential loss of either the fuel clad or RCS fission product barrier. The events and conditions classified under attribute 3.1.2(B) must therefore be precursors that could readily or reasonably lead to outcomes classified under attribute 3.1.2(A).

Nuclear power plant safety-related systems are typically comprised of two or more separate and redundant trains of equipment. A loss of one train of safety-related equipment due to an event or condition does not significantly increase risk nor threaten any greater consequence because there is at least one additional train to perform the safety-related function. This situation does not reflect the Alert definition wording of events "which involve an actual or potential substantial degradation of the level of safety of the plant".

If an event or condition were to adversely affect the performance of more than one train of a safety-related system, then the safety-related function performed by that system could be compromised. It was also recognized that one or more safety-related functions could be degraded or lost if multiple safety-related systems were concurrently impacted (regardless of how many individual trains were lost). The Alert declaration required by this IC reflects these considerations using criteria that may be evaluated within the allowable 15-minute emergency classification assessment period.

HA4

Initiating Condition - ALERT

EXPLOSION affecting safety systems.

Operating Mode Applicability: All

Example Emergency Action Levels:

(1) EXPLOSION resulting in **ANY** of the following:

- Reports of VISIBLE DAMAGE to **ANY** of the following structures or areas:

  (site-specific list)

- Control Room indication of degraded performance of more than one train of a safety system or more than one safety system.

- Damage report of sufficient magnitude to conclude that more than one train of a safety system or more than one system cannot perform their intended design function.

Basis:

This IC represents damage of sufficient magnitude to potentially challenge the integrity of a fission product barrier (i.e., a precursor to a potential loss or loss of a barrier); therefore, this condition is an actual or potential substantial degradation of the level of safety of the plant.

VISIBLE DAMAGE is used to differentiate between an event that causes minor damage and one that has the potential to damage safety systems. The declaration of an Alert and the activation of the Technical Support Center and Operational Support Center will provide the Emergency Director with the resources necessary to perform detailed damage assessments.

Safety systems are those systems required for safe plant operation, cooling down the unit and placing it in the cold shutdown condition. These systems include the ECCS; on-site emergency AC and DC power sources and distribution systems; and associated support systems necessary for operation.

Degraded performance is indicated if the affected trains and/or systems are unable to perform their intended design functions.

Escalation of the emergency classification would be based on the Recognition Category A, C or F ICs.

ECL Assignment Attributes: 3.1.2.B

Developer Notes:

The “site-specific list” should specify those structures or areas that contain components of safety systems. Safety systems are those systems required for safe plant operation, cooling down the unit and placing it in the cold shutdown condition. These systems include the ECCS; on-site

emergency AC and DC power sources and distribution systems; and associated support systems necessary for operation.

Per attribute 3.1.2(B), an event or condition corresponding to the Alert classification must be of sufficient magnitude that it that significantly reduces the margin to a loss or potential loss of the fuel clad or RCS fission product barrier. The risks and consequences associated with this attribute are thus aligned with those of attribute 3.1.2(A), i.e., a loss or potential loss of either the fuel clad or RCS fission product barrier. The events and conditions classified under attribute 3.1.2(B) must therefore be precursors that could readily or reasonably lead to outcomes classified under attribute 3.1.2(A).

Nuclear power plant safety-related systems are typically comprised of two or more separate and redundant trains of equipment. A loss of one train of safety-related equipment due to an event or condition does not significantly increase risk nor threaten any greater consequence because there is at least one additional train to perform the safety-related function. This situation does not reflect the Alert definition wording of events "which involve an actual or potential substantial degradation of the level of safety of the plant".

If an event or condition were to adversely affect the performance of more than one train of a safety-related system, then the safety-related function performed by that system could be compromised. It was also recognized that one or more safety-related functions could be degraded or lost if multiple safety-related systems were concurrently impacted (regardless of how many individual trains were lost). The Alert declaration required by this IC reflects these considerations using criteria that may be evaluated within the allowable 15-minute emergency classification assessment period.

HA5

Initiating Condition - ALERT

Gas release impeding access to safety systems.

Operating Mode Applicability: All

Example Emergency Action Levels:

Note: If the safety system equipment in the listed room or area was already inoperable, or out of service, before the event occurred, then no emergency should be declared since the event will have no adverse impact beyond that already allowed by Technical Specifications at the time of the event.

(1) a. Release of a toxic, corrosive, asphyxiant or flammable gas to any of the following plant rooms or areas:

(site-specific list)

AND

b. Personnel cannot enter the room or area to perform a required action necessary to maintain safe plant operation, or to safely cooldown or shutdown the plant.

Basis:

This IC represents an event that could potentially challenge the integrity of a fission product barrier (i.e., a precursor to a potential loss or loss of a barrier), and is therefore an actual or potential substantial degradation of the level of safety of the plant. A release of a toxic, corrosive, asphyxiant or flammable gas in certain plant rooms/areas and of sufficient quantity can preclude personnel from accessing safety system equipment. An Alert declaration is warranted if personnel are unable to enter the affected room/area when required to perform an action (e.g., manual/local manipulation of a component) necessary to maintain safe plant operation, or to safely cooldown or shutdown the plant.

An emergency declaration is not warranted if access to the affected room or area is not currently required in order to maintain safe plant operation, or to safely cooldown or shutdown the plant; or if actions of an administrative or record keeping nature cannot be performed (e.g., normal rounds or routine inspections). In addition, a gas release precluding access to safety system equipment taken out-of-service for maintenance, repair or testing does not require an emergency declaration.

This IC does not require atmospheric sampling; it only requires the Emergency Director's judgment that the gas concentration in the affected room/area is sufficient to preclude required access. This judgment may be based on a variety of factors including an existing job hazard analysis, report of ill effects on personnel, advice from a subject matter expert or operating experience with the same or similar hazards. The Emergency Director should also consider the nature of the imposed access constraints; conservative or precautionary measures that would not impede timely performance of an urgently needed action do not meet the intent of this EAL.

An asphyxiant is a gas capable of reducing the level of oxygen in the body to dangerous levels. Most commonly, asphyxiants work by merely displacing air in an enclosed environment. This reduces the concentration of oxygen below the normal level of around 19%, which can lead to breathing difficulties, unconsciousness or even death.

The use of extraordinary measures to facilitate personnel entry into an area (e.g., SCBAs) cannot be a factor in the emergency classification assessment.

This EAL does not apply to firefighting activities that automatically or manually activate a fire suppression system in an area. This EAL does not apply to intentional inerting of containment (BWR only).

Escalation of the emergency classification would be based on the Recognition Category A, C or F ICs.

ECL Assignment Attributes: 3.1.2.B

Developer Notes:

The "site-specific list" should specify those rooms or areas that contain components of safety systems which require a manual/local action to maintain proper/expected operation. These actions should be identified by through a review of operating procedures used for normal operation, cooldown and shutdown. They do not encompass actions of a contingent or emergency nature (e.g., an emergency repair or corrective action).

Safety systems are those systems required for safe plant operation, cooling down the unit and placing it in the cold shutdown condition. These systems include the ECCS; on-site emergency AC and DC power sources and distribution systems; and associated support systems necessary for operation.

HA6

Initiating Condition - ALERT

Severe weather or flooding affecting safety systems.

Operating Mode Applicability: All

Example Emergency Action Levels:

(1) Severe weather or flooding causing **ANY** of the following:

- Reports of VISIBLE DAMAGE to **ANY** of the following structures or areas:

  (site-specific list)

- Control Room indication of degraded performance of more than one train of a safety system or more than one safety system.

- Damage report of sufficient magnitude to conclude that more than one train of a safety system or more than one system cannot perform their intended design function.

Basis:

This IC represents damage or other effects of sufficient magnitude to potentially challenge the integrity of a fission product barrier (i.e., a precursor to a potential loss or loss of a barrier); therefore, this condition is an actual or potential substantial degradation of the level of safety of the plant.

Severe weather includes meteorological events such as hurricanes, tornados and strong storms (e.g., a microburst or a nor'easter) that can generate high winds or rates of precipitation.

VISIBLE DAMAGE is used to differentiate between an event that causes minor damage and one that has the potential to damage safety systems. The declaration of an Alert and the activation of the Technical Support Center and Operational Support Center will provide the Emergency Director with the resources necessary to perform detailed damage assessments.

Safety systems are those systems required for safe plant operation, cooling down the unit and placing it in the cold shutdown condition. These systems include the ECCS; on-site emergency AC and DC power sources and distribution systems; and associated support systems necessary for operation.

Degraded performance is indicated if the affected trains and/or systems are unable to perform their intended design functions.

Escalation of the emergency classification would be based on the Recognition Category A, C or F ICs.

ECL Assignment Attributes: 3.1.2.B

Developer Notes:

The "site-specific list" should specify those structures or areas that contain components of safety systems. Safety systems are those systems required for safe plant operation, cooling down the unit and placing it in the cold shutdown condition. These systems include the ECCS; on-site emergency AC and DC power sources and distribution systems; and associated support systems necessary for operation.

Per attribute 3.1.2(B), an event or condition corresponding to the Alert classification must be of sufficient magnitude that it that significantly reduces the margin to a loss or potential loss of the fuel clad or RCS fission product barrier. The risks and consequences associated with this attribute are thus aligned with those of attribute 3.1.2(A), i.e., a loss or potential loss of either the fuel clad or RCS fission product barrier. The events and conditions classified under attribute 3.1.2(B) must therefore be precursors that could readily or reasonably lead to outcomes classified under attribute 3.1.2(A).

Nuclear power plant safety-related systems are typically comprised of two or more separate and redundant trains of equipment. A loss of one train of safety-related equipment due to an event or condition does not significantly increase risk nor threaten any greater consequence because there is at least one additional train to perform the safety-related function. This situation does not reflect the Alert definition wording of events "which involve an actual or potential substantial degradation of the level of safety of the plant".

If an event or condition were to adversely affect the performance of more than one train of a safety-related system, then the safety-related function performed by that system could be compromised. It was also recognized that one or more safety-related functions could be degraded or lost if multiple safety-related systems were concurrently impacted (regardless of how many individual trains were lost). The Alert declaration required by this IC reflects these considerations using criteria that may be evaluated within the allowable 15-minute emergency classification assessment period.

HA7

Initiating Condition - ALERT

Plant control transferred to locations outside the Control Room.

Operating Mode Applicability: All

Example Emergency Action Levels:

(1) An UNPLANNED event has resulted in plant control being transferred from the Control Room to (site-specific remote shutdown panels and local control stations).

Basis:

This IC addresses an evacuation of the Control Room that results in transfer of plant control to alternate locations. The loss of the ability to control the plant from the Control Room is considered to be a potential substantial degradation in the level of plant safety.

Following a Control Room evacuation, the control of plant will be transferred to alternate shutdown locations. The necessity to control a plant shutdown from outside the Control Room, in addition to responding to the event that required the evacuation of the Control Room, will present challenges to plant operators and other on-shift personnel. Activation of the ERO and emergency response facilities will assist in responding to these challenges.

For emergency declaration purposes, the 15-minute clock starts when the control of plant equipment is (given to, or taken at, the site-specific remote shutdown panels and local control stations – see Developer Notes below).

The inability to establish plant control from outside the Control Room in a timely manner will escalate this event to a Site Area Emergency in accordance with IC HS5.

ECL Assignment Attributes: 3.1.2.B

Developer Notes:

The "site-specific remote shutdown panels and local control stations" are the panels and control stations referenced in plant procedures used to cooldown and shutdown the plant from a location(s) outside the Control Room.

In the Basis section, complete the sentence in the third paragraph the appropriate site-specific terms.

HA8

Initiating Condition - ALERT

Other conditions exist which in the judgment of the Emergency Director warrant declaration of an Alert.

Operating Mode Applicability: All

Example Emergency Action Levels:

(1) Other conditions exist which, in the judgment of the Emergency Director, indicate that events are in progress or have occurred which involve an actual or potential substantial degradation of the level of safety of the plant or a security event that involves probable life threatening risk to site personnel or damage to site equipment because of HOSTILE ACTION. Any releases are expected to be limited to small fractions of the EPA Protective Action Guideline exposure levels.

Basis:

This EAL addresses unanticipated conditions not addressed explicitly elsewhere but that warrant declaration of an emergency because conditions exist which are believed by the Emergency Director to fall under the emergency classification level description for an Alert.

HS1

Initiating Condition - SITE AREA EMERGENCY

HOSTILE ACTION within the PROTECTED AREA.

Operating Mode Applicability: All

Example Emergency Action Levels:

(1) A HOSTILE ACTION is occurring or has occurred within the PROTECTED AREA as reported by the (site-specific security shift supervision).

Basis:

This IC represents an escalation in the threat to personnel and plant safety above that described by Alert IC HA1. The attack by a HOSTILE FORCE has progressed from the OWNER CONTROLLED AREA to the PROTECTED AREA, or there has been an impact on/in the PROTECTED AREA by an aircraft. Either event will require rapid assistance due to the possibility for significant and/or indeterminate damage to equipment, and casualties among the plant staff.

Timely and accurate communications between Security Shift Supervision and the Control Room is essential for proper classification of a security-related event.

Security plans and terminology are based on the guidance provided by NEI 03-12, *Template for the Security Plan, Training and Qualification Plan, Safeguards Contingency Plan [and Independent Spent Fuel Storage Installation Security Program]*.

As time and conditions allow, these events require a heightened state of readiness by the plant staff and implementation of onsite protective measures (e.g., evacuation, dispersal or sheltering). The Site Area Emergency declaration will mobilize ORO resources and have them available to develop and implement public protective actions in the unlikely event that the attack is successful in impairing multiple safety functions.

This IC does not apply to incidents that are accidental events, acts of civil disobedience, or otherwise are not a HOSTILE ACTION perpetrated by a HOSTILE FORCE. Examples include the crash of a small aircraft, shots from hunters, physical disputes between employees within the PROTECTED AREA, etc. Reporting of these types of events is adequately addressed by other EALs, or the requirements of 10 CFR § 73.71 or 10 CFR § 50.72.

Escalation of emergency classification level would be based IC HG1 after assessing the plant status during or following the attack or aircraft impact.

EALs should not incorporate Security-sensitive information. This includes information that may be advantageous to a potential adversary, such as the particulars concerning a specific threat or threat location.

ECL Assignment Attributes: 3.1.3.D

Developer Notes:

The (site-specific security shift supervision) is the title of the on-shift individual responsible for supervision of the on-shift security force.

EALs should not incorporate Security-sensitive information. This includes information that may be advantageous to a potential adversary, such as the particulars concerning a specific threat or threat location.

HS7

Initiating Condition - SITE AREA EMERGENCY

Inability to control a key safety function from outside the Control Room.

Operating Mode Applicability: All

Example Emergency Action Levels:

Note: The Emergency Director should declare the emergency promptly upon determining that the applicable time has been exceeded, or will likely be exceeded.

(1) a. An event has resulted in plant control being transferred from the Control Room to (site-specific remote shutdown panels and local control stations).

AND

b. Control of **ANY** of the following safety functions is not reestablished within (site-specific number of minutes).

- Reactivity control
- Core cooling [*PWR*] / RPV water level [*BWR*]
- RCS heat removal

Basis:

This IC addresses an evacuation of the Control Room that results in transfer of plant control to alternate locations, and the control of a key safety function cannot be reestablished in a timely manner. The failure to gain control of a key safety function following a transfer of plant control to alternate locations is a precursor to a challenge to one or more fission product barriers within a relatively short period of time.

The determination of whether or not "control" is established at the remote safe shutdown location(s) is based on Emergency Director judgment. The Emergency Director is expected to make a reasonable, informed judgment within (the site-specific time for transfer) minutes whether or not the operating staff has control of key safety functions from the remote safe shutdown location(s).

Escalation of this emergency classification level, if appropriate, would be by Fission Product Barrier Matrix, or ICs with Recognition Categories A, C or S.

ECL Assignment Attributes: 3.1.3.B

Developer Notes:

The "site-specific remote shutdown panels and local control stations" are the panels and control stations referenced in plant procedures used to cooldown and shutdown the plant from a location(s) outside the Control Room.

The "site-specific number of minutes" is the time in which plant control must be (or is expected to be) reestablished at an alternate location as described in site-specific fire response analyses. Absent a basis in the site-specific analyses, 15 minutes may be used. Another time period may be used with appropriate basis/justification.

HS8

Initiating Condition - SITE AREA EMERGENCY

Other conditions exist which in the judgment of the Emergency Director warrant declaration of a Site Area Emergency.

Operating Mode Applicability: All

Example Emergency Action Levels:

(1) Other conditions exist which in the judgment of the Emergency Director indicate that events are in progress or have occurred which involve actual or likely major failures of plant functions needed for protection of the public or HOSTILE ACTION that results in intentional damage or malicious acts, (1) toward site personnel or equipment that could lead to the likely failure of or, (2) that prevent effective access to equipment needed for the protection of the public. Any releases are not expected to result in exposure levels which exceed EPA Protective Action Guideline exposure levels beyond the site boundary.

Basis:

This EAL addresses unanticipated conditions not addressed explicitly elsewhere but that warrant declaration of an emergency because conditions exist which are believed by the Emergency Director to fall under the emergency classification level description for a Site Area Emergency.

HG1

Initiating Condition - GENERAL EMERGENCY

HOSTILE ACTION resulting in loss of a key safety function or damage to spent fuel.

Operating Mode Applicability: All

Example Emergency Action Levels:

(1) a. A HOSTILE ACTION is occurring or has occurred within the PROTECTED AREA as reported by the (site-specific security shift supervision).

AND

b. **EITHER** of the following:

1. **ANY** of the following safety functions cannot be controlled or maintained.

- Reactivity control
- Core cooling [*PWR*] / RPV water level [*BWR*]
- RCS heat removal

2. Damage to spent fuel has occurred or is IMMINENT.

Basis:

This IC addresses an event in which a HOSTILE FORCE has been successful in adversely impacting the control or functionality of equipment required to maintain key safety functions. It also addresses a successful HOSTILE ACTION that results in actual or IMMINENT damage to spent fuel due either to, 1) damage to a spent fuel cooling system (e.g., pumps, heat exchangers, controls, etc.) or, 2) loss of spent fuel pool integrity such that sufficient water level cannot be maintained.

Timely and accurate communications between Security Shift Supervision and the Control Room is essential for proper classification of a security-related event.

Security plans and terminology are based on the guidance provided by NEI 03-12, *Template for the Security Plan, Training and Qualification Plan, Safeguards Contingency Plan [and Independent Spent Fuel Storage Installation Security Program]*.

EALs should not incorporate Security-sensitive information. This includes information that may be advantageous to a potential adversary, such as the particulars concerning a specific threat or threat location.

ECL Assignment Attributes: 3.1.4.D

Developer Notes:

The (site-specific security shift supervision) is the title of the on-shift individual responsible for supervision of the on-shift security force.

EALs should not incorporate Security-sensitive information. This includes information that may be advantageous to a potential adversary, such as the particulars concerning a specific threat or threat location.

HG8

Initiating Condition - GENERAL EMERGENCY

Other conditions exist which in the judgment of the Emergency Director warrant declaration of a General Emergency.

Operating Mode Applicability: All

Example Emergency Action Levels:

1. Other conditions exist which in the judgment of the Emergency Director indicate that events are in progress or have occurred which involve actual or IMMINENT substantial core degradation or melting with potential for loss of containment integrity or HOSTILE ACTION that results in an actual loss of physical control of the facility. Releases can be reasonably expected to exceed EPA Protective Action Guideline exposure levels offsite for more than the immediate site area.

Basis:

This EAL addresses unanticipated conditions not addressed explicitly elsewhere but that warrant declaration of an emergency because conditions exist which are believed by the Emergency Director to fall under the emergency classification level description for General Emergency.

11 SYSTEM MALFUNCTION ICS/EALS

Table S-1: Recognition Category "S" Initiating Condition Matrix

UNUSUAL EVENT	ALERT	SITE AREA EMERGENCY	GENERAL EMERGENCY
SU1 Loss of offsite AC power capability to emergency busses for 15 minutes or longer. *Op. Modes: Power Operation, Startup, Hot Standby, Hot Shutdown*	**SA1** AC power capability to emergency busses reduced to a single power source for 15 minutes or longer. *Op. Modes: Power Operation, Startup, Hot Standby, Hot Shutdown*	**SS1** Loss of all offsite and all onsite AC power to emergency busses for 15 minutes or longer. *Op. Modes: Power Operation, Startup, Hot Standby, Hot Shutdown*	**SG1** Prolonged loss of all offsite and all onsite AC power to emergency busses. *Op. Modes: Power Operation, Startup, Hot Standby, Hot Shutdown*
SU2 UNPLANNED loss of safety system annunciation in the Control Room for 15 minutes or longer. *Op. Modes: Power Operation, Startup, Hot Standby, Hot Shutdown*	**SA2** Inability to monitor a key safety function parameter for 15 minutes or longer. *Op. Modes: Power Operation, Startup, Hot Standby, Hot Shutdown*	**SS2** Loss of all vital DC power for 15 minutes or longer. *Op. Modes: Power Operation, Startup, Hot Standby, Hot Shutdown*	**SG2** Loss of all AC and DC emergency busses for 15 minutes or longer. *Op. Modes: Power Operation, Startup, Hot Standby, Hot Shutdown*
SU3 Fuel clad degradation greater than Technical Specification allowable limits. *Op. Modes: Power Operation, Startup, Hot Standby, Hot Shutdown*			
SU4 RCS leakage for 15 minutes or longer. *Op. Modes: Power Operation, Startup, Hot Standby, Hot Shutdown*			
SU5 Automatic (trip [*PWR*] or scram [*BWR*]) fails to shutdown the reactor. *Op. Modes: Power Operation, Startup*	**SA5** Automatic (trip [*PWR*] or scram [*BWR*]) fails to shutdown the reactor and challenge to RCS barrier [*PWR*] or challenge to primary containment barrier [*BWR*]. *Op. Modes:* Power *Operation, Startup*	**SS5** Automatic (trip [*PWR*] or scram [*BWR*]) fails to shutdown the reactor and extreme challenge to core cooling or RCS heat removal. *Op. Modes:* Power *Operation, Startup*	

Table intended for use by EAL developers. Inclusion in licensee documents is not required.

UNUSUAL EVENT	ALERT	SITE AREA EMERGENCY	GENERAL EMERGENCY
SU6 Loss of all onsite or offsite communications capabilities. *Op. Modes: Power Operation, Startup, Hot Standby, Hot Shutdown*			

Table intended for use by EAL developers. Inclusion in licensee documents is not required.

SU1

Initiating Condition - NOTIFICATION OF UNUSUAL EVENT

Loss of offsite AC power capability to emergency busses for 15 minutes or longer.

Operating Mode Applicability: Power Operation, Startup, Hot Standby, Hot Shutdown

Example Emergency Action Levels:

Note: The Emergency Director should declare the emergency promptly upon determining that the applicable time has been exceeded, or will likely be exceeded.

(1) Loss of **ALL** offsite AC power capability to (site-specific emergency busses) for 15 minutes or longer.

Basis:

Prolonged loss of offsite power reduces required power source redundancy and potentially degrades the level of safety of the plant by rendering the plant more vulnerable to a complete loss of power to AC emergency busses.

For emergency classification purposes, "capability" means that an offsite AC power source(s) is available to the emergency busses, whether or not the busses are powered from it.

Fifteen minutes was selected as a threshold to exclude transient or momentary losses of offsite power.

ECL Assignment Attributes: 3.1.1.A

Developer Notes:

The "site-specific emergency busses" are the busses fed by offsite or emergency AC power sources that supply power to the electrical distribution system that powers safety systems. There is typically 1 emergency buss per train of safety systems.

At multi-unit stations, the EALs should allow credit for compensatory measures that are proceduralized and can be implemented within 15 minutes. Consider capabilities such as power source cross-ties, "swing" generators, other power sources described in abnormal or emergency operating procedures, etc. Plants that have a proceduralized capability to cross-tie AC power from an offsite power supply of a companion unit may take credit for the redundant power source in the associated EAL for this IC. These stations must also consider the impact of this condition on safety system functions shared between multiple units.

As used above, safety systems are those systems required for safe plant operation, cooling down the unit and placing it in the cold shutdown condition. These systems include the ECCS; on-site emergency AC and DC power sources and distribution systems; and associated support systems necessary for operation.

SU2

Initiating Condition - NOTIFICATION OF UNUSUAL EVENT

UNPLANNED loss of safety system annunciation in the Control Room for 15 minutes or longer.

Operating Mode Applicability: Power Operation, Startup, Hot Standby, Hot Shutdown

Example Emergency Action Levels:

Note: The Emergency Director should declare the emergency promptly upon determining that the applicable time has been exceeded, or will likely be exceeded.

(1) UNPLANNED loss of **ALL** the following annunciation for 15 minutes or longer.

(site-specific list)

Basis:

This IC recognizes the difficulty associated with monitoring safety system performance without the use of annunciators to alert Control Room personnel of an off-normal condition. Compensatory measures for a loss of annunciation can be readily implemented and may include increased monitoring of main control console indications and more frequent plant rounds by non-licensed operators. An Unusual Event declaration is appropriate given the availability of compensatory measures and the fact that annunciators do not provide specific system or equipment status information, and parameter values, necessary to operate the plant, nor to process through AOPs or EOPs.

The safety systems of interest to this EAL are those associated with the key safety functions of reactivity control, core cooling [*PWR*] / RPV water level [*BWR*] and RCS heat removal.

Fifteen minutes was selected as a threshold to exclude transient or momentary power losses.

If a loss of indication occurs, the classification may be escalated to an Alert via IC SA3.

Developer Notes:

ECL Assignment Attributes: 3.1.1.A

The "site-specific list" should include the annunciation sources (e.g., a panel or grouping of annunciator windows) that monitor the performance of safety systems associated with the key safety functions of reactivity control, core cooling [*PWR*] / RPV water level [*BWR*] and RCS heat removal.

Due to the limited number of safety systems in operation during cold shutdown, refueling, and defueled modes, no analogous IC is included for these modes of operation.

SU3

Initiating Condition - NOTIFICATION OF UNUSUAL EVENT

Fuel clad degradation greater than Technical Specification allowable limits.

Operating Mode Applicability: Power Operation, Startup, Hot Standby, Hot Shutdown

Example Emergency Action Levels: (1 or 2)

(1) (Site-specific radiation monitor readings indicating fuel clad degradation greater than Technical Specification allowable limits.)

(2) Reactor coolant sample activity greater than (site-specific value taken from Technical Specification allowable limits).

Basis:

In this IC, the plant is outside the safety envelope defined by Technical Specifications and, as a result, is considered to be a potential degradation of the level of safety of the plant.

EAL #1 addresses site-specific radiation monitor readings that provide indication of a degradation of fuel clad integrity.

EAL #2 addresses reactor coolant samples greater than Technical Specification allowable limits for transient iodine spiking.

Escalation of this EAL to the Alert level is via IC AA1 or the Fission Product Barrier ICs.

ECL Assignment Attributes: 3.1.1.A

Developer Notes:

For EAL #1 – Depending upon the plant design, this value may be determined using different methods. Sites are expected to use existing methods and capabilities to address this EAL. Examples include:

- An installed radiation monitor such as a letdown system or air ejector monitor.
- A hand-held monitor reading with pre-calculated conversion values or readily implementable conversion calculation capability.
- A deployed detector that can be read at a distance from the source.

For EAL#2 – Enter the reactor coolant activity limits defined in the site's Technical Specifications.

SU4

Initiating Condition - NOTIFICATION OF UNUSUAL EVENT

RCS leakage for 15 minutes or longer.

Operating Mode Applicability: Power Operation, Startup, Hot Standby, Hot Shutdown

Example Emergency Action Levels: (1 or 2)

Note: The Emergency Director should declare the emergency promptly upon determining that the applicable time has been exceeded, or will likely be exceeded.

(1) RCS unidentified or pressure boundary leakage greater than (site-specific value) for 15 minutes or longer.

(2) RCS identified leakage greater than (site-specific value) for 15 minutes or longer.

Basis:

This IC may be a precursor to a more serious condition and, as a result, is considered to be a potential degradation of the level of safety of the plant. In this case, a loss of RCS mass (reactor coolant) is greater than that allowed by Technical Specifications and operators, following applicable procedures, cannot promptly isolate the leak.

These EALs should be assessed using the definitions for RCS "unidentified leakage", "pressure boundary leakage" and "identified leakage" that are contained in the plant Technical Specifications. This approach will maintain continuity between Technical Specification and EAL assessments.

The 15-minute threshold duration allows sufficient time for prompt operator actions to isolate the leakage, if possible.

The value for the unidentified or pressure boundary leakage was selected as it is usually observable with normal Control Room indications. Lesser values typically require time-consuming calculations (e.g., a mass balance calculation). The EAL for identified leakage is set at a higher value due to the lesser significance of identified leakage in comparison to unidentified or pressure boundary leakage.

RCS leakage caused by the as-designed/expected operation of a relief valve does not warrant an emergency classification. For PWRs, an emergency classification would be required if the RCS leakage is caused by a relief valve that is not functioning as designed/expected (e.g., a relief valve sticks open and the line flow cannot be isolated). For BWRs, a stuck-open Safety Relief Valve (SRV) or SRV leakage is not considered either identified or unidentified leakage by Technical Specifications and, therefore, is not applicable to this EAL.

Escalation of this EAL to the Alert level is via Recognition Category A and F ICs.

ECL Assignment Attributes: 3.1.1.A

Developer Notes:

EAL #1 – For the site-specific leak rate value, enter the higher of 10 gpm or value specified in the site's Technical Specifications for this type of leakage.

EAL #2 – For the site-specific leak rate value, enter the higher of 25 gpm or value specified in the site's Technical Specifications for this type of leakage.

SU5

Initiating Condition - NOTIFICATION OF UNUSUAL EVENT

Automatic (trip [*PWR*] or scram [*BWR*]) fails to shutdown the reactor.

Operating Mode Applicability: Power Operation

Example Emergency Action Levels:

(1) An automatic reactor (trip [*PWR*] or scram [*BWR*]) failed to shutdown the reactor as indicated by (site-specific indications of reactor not shutdown).

Basis:

This IC describes a failure of the reactor protection system to automatically trip/scram the reactor following generation of an automatic trip/scram signal. This event represents a potential degradation of the level of safety of the plant in that it is a precursor to a more significant condition.

This event involves a failure of the Reactor Protection System to automatically trip/scram the plant upon receipt of a demand signal. The automatic trip/scram signal may or may not be generated as a result of a plant transient; however, classification is required if the event results in initial post-trip/scram conditions during which the reactor is producing more heat than the ECCS is designed to remove. This classification must be declared regardless of any subsequent actions that shutdown the reactor (e.g., a successful manual reactor trip/scram).

Following the failure of an automatic (trip [*PWR*] or scram [*BWR*]), operators will promptly initiate actions to shutdown the reactor. Such actions may include inserting a manual trip/scram signal, manually driving in the control rods, emergency boration, local opening of breakers, etc. If these actions are successful, reactor heat generation will quickly fall to a level within the capabilities of the ECCS. Provided that the integrity of the RCS barrier [*PWR*], or primary containment barrier [*BWR*] is not challenged during the period of excess heat generation, there is no IMMINENT threat to any fission product barrier.

A variety of factors can affect the plant response to the failure of an automatic trip – the current power level, performance of mitigation equipment or actions, availability of the condenser, etc. For the events of greatest concern, a failure to scram [*BWR*] / trip [*PWR*] from a high-power condition with the condenser unavailable (isolated), it is expected that suppression pool temperature would exceed the BIIT [BWR] / a pressurizer PORV would lift [*PWR*] very shortly after event initiation (i.e., within minutes). For this reason, the applicability of this IC over IC SA5 should be readily apparent during the initial emergency classification assessment period.

If the actions to shutdown the reactor are not successful prior to RCS pressure reaching (site-specific lowest pressurizer PORV pressure setpoint) [*PWR*] or suppression pool temperature reaching (site-specific Boron Injection Initiation Temperature (BIIT)) [*BWR*], then the event will escalate to an Alert via IC FA1.

ECL Assignment Attributes: 3.1.1.A

Developer Notes:

For emergency classification purposes, the reactor should be considered shutdown when it is producing less heat than the maximum decay heat load for which the ECCS is designed (typically 3 to 5% power). For plants using the Westinghouse CSFSTs, EALs 1.a should use the reactor power criteria associated with a Subcriticality Red Path. For BWRs, this EAL should be the APRM downscale trip setpoint.

This IC is applicable in any Mode in which the actual reactor power level could exceed the power level at which the reactor is considered shutdown. A PWR that specifies a shutdown reactor power level that is less than or equal to the reactor power level that defines the lower bound of Power Operation (Mode 1) will need to include Startup (Mode 2) in the Operating Mode Applicability. For example, if the reactor is considered to be shutdown at 3% and Power Operation starts at >5%, then the IC is also applicable in Startup Mode.

For additional background information, refer to NUREG-1780, *Regulatory Effectiveness of the Anticipated Transient Without Scram Rule*.

SU6

Initiating Condition -- NOTIFICATION OF UNUSUAL EVENT

Loss of all onsite or offsite communications capabilities.

Operating Mode Applicability: Power Operation, Startup, Hot Standby, Hot Shutdown

Example Emergency Action Levels: (1 or 2 or 3)

(1) Loss of **ALL** of the following onsite communication methods:

(site-specific list of communications methods)

(2) Loss of **ALL** of the following ORO communications methods:

(site-specific list of communications methods)

(3) Loss of **ALL** of the following NRC communications methods:

(site-specific list of communications methods)

Basis:

This IC recognizes concerns associated with a significant loss of communications capability. While not a direct challenge to plant or personnel safety, this event warrants prompt notifications to OROs and the NRC.

EAL #1 addresses a total loss of the communications methods used in support of routine plant operations.

EAL #2 addresses a total loss of the communications methods used to notify all OROs of an emergency declaration. The OROs referred to here are (see Developer Notes).

EAL #3 addresses a total loss of the communications methods used to notify the NRC of an emergency declaration.

This IC should be assessed only when extraordinary means are being utilized to make communications possible (e.g., relaying of on-site information via individuals or multiple radio transmission points, individuals being sent to offsite locations, etc.).

The inability to notify a single ORO requiring a 15-minute notification does not warrant a declaration provided that communications to another such ORO requiring 15-minute notification is functional.

ECL Assignment Attributes: 3.1.1.C

Developer Notes:

EAL #1 - The "site-specific list of communications methods" should include all communications methods used for routine plant communications (e.g., commercial or site telephones, page-party systems, radios, etc.). This listing should include installed plant equipment and components, and not items owned and maintained by individuals.

EAL #2 - The "site-specific list of communications methods" should include all communications methods used to perform emergency notifications to OROs as described in the site Emergency Plan. The listing should include installed plant equipment and components, and not items owned and maintained by individuals. Example methods are ring-down/dedicated telephone lines, commercial telephone lines, radios, and internet-based communications technology.

In the Basis section, insert the site-specific listing of the OROs requiring notification of an emergency declaration from the Control Room in accordance with the site Emergency Plan, and typically within 15 minutes.

EAL #3 – The "site-specific list of communications methods" should include all communications methods used to perform emergency notifications to the NRC as described in the site Emergency Plan. The listing should include installed plant equipment and components, and not items owned and maintained by individuals. These methods are typically the dedicated Emergency Notification System (ENS) telephone line and commercial telephone lines.

SA1

Initiating Condition - ALERT

AC power capability to emergency busses reduced to a single power source for 15 minutes or longer.

Operating Mode Applicability: Power Operation, Startup, Hot Standby, Hot Shutdown

Example Emergency Action Levels:

Note: The Emergency Director should declare the emergency promptly upon determining that the applicable time has been exceeded, or will likely be exceeded.

(1) AC power capability to (site-specific emergency busses) is reduced to a single power source for 15 minutes or longer.

Basis:

This IC describes a significant degradation of offsite and onsite AC power sources (or plant power distribution system) such that any additional single failure would result in a loss of all AC emergency busses. It provides an escalation path from IC SU1.

Fifteen minutes was selected as a threshold to exclude transient or momentary losses of power.

Some potential examples of this condition are presented below.

- A loss of all offsite power with a concurrent failure of all but one emergency power source (e.g., an onsite diesel generator).
- A loss of all offsite power and loss of all emergency power sources (e.g., onsite diesel generators) with a single train of emergency busses being back-fed from the unit main generator.
- A loss of emergency power sources (e.g., onsite diesel generators) with a single train of emergency busses being back-fed from an offsite power source.

The subsequent loss of the remaining single power source would escalate the event to a Site Area Emergency in accordance with IC SS1.

ECL Assignment Attributes: 3.1.2.B

Developer Notes:

Developers should modify the bulleted examples provided in the basis section, above, as needed to reflect their site-specific plant designs and capabilities.

The “site-specific emergency busses” are the busses fed by offsite or emergency AC power sources that supply power to the electrical distribution system that powers safety systems. There is typically 1 emergency buss per train of safety systems.

For a backup power source comprised of two or more generators (e.g., two 50%-capacity generators sized to feed 1 emergency buss), the EAL and/or Basis section must specify that all generators for that source are operating.

The EAL and/or Basis section may specify use of a non-safety-related power source provided that operation of this source is controlled in accordance with abnormal or emergency operating procedures.

At multi-unit stations, the EALs should allow credit for compensatory measures that are proceduralized and can be implemented within 15 minutes. Consider capabilities such as power source cross-ties, "swing" generators, other power sources described in abnormal or emergency operating procedures, etc. Plants that have a proceduralized capability to cross-tie AC power from an offsite power supply of a companion unit may take credit for the redundant power source in the associated EAL for this IC. These stations must also consider the impact of this condition on safety system functions shared between multiple units.

As used above, safety systems are those systems required for safe plant operation, cooling down the unit and placing it in the cold shutdown condition. These systems include the ECCS; on-site emergency AC and DC power sources and distribution systems; and associated support systems necessary for operation.

SA2

Initiating Condition - ALERT

Inability to monitor a key safety function parameter for 15 minutes or longer.

Operating Mode Applicability: Power Operation, Startup, Hot Standby, Hot Shutdown

Example Emergency Action Levels:

Note: The Emergency Director should declare the emergency promptly upon determining that the applicable time has been exceeded, or will likely be exceeded.

(1) a. Inability to monitor one or more of the following key safety function parameters from within the Control Room for 15 minutes or longer.

[*BWR parameter list*]	[*PWR parameter list*]
Reactor Power	Reactor Power
RPV Water Level	Reactor Vessel Level
RPV Pressure	Subcooling
Primary Containment Pressure	In-Core/Core Exit Temperature
Suppression Pool Level	Levels in at least (site-specific number) steam generators
Suppression Pool Temperature	Steam Generator Auxiliary or Emergency Feed Water Flow

AND

b. A SIGNIFICANT TRANSIENT in progress.

Basis:

This IC recognizes the difficulty associated with monitoring the performance of key safety functions without the ability to determine critical parameters from within the Control Room. The specified parameters are used to assess the performance of key safety functions; these functions are reactivity control, core cooling [PWR] / RPV water level [BWR] and RCS heat removal. The inability to fully monitor the performance of one or more of these functions reduces the margin to a potential fission product barrier challenge, and thus represents a potential substantial degradation in the level of safety of the plant.

Fifteen minutes was selected as a threshold to exclude transient or momentary losses of indication.

As used in this EAL, an “inability to monitor” means that one or more of the listed parameter values cannot be obtained from within the Control Room. This situation would require a loss of all the Control Room indications for the given parameter(s). For example, indications for reactor power are unavailable from all analog, digital and recorder sources within the Control Room.

A loss of annunciation is evaluated under IC SU2 and is not a consideration for this IC.

Escalation of the emergency classification will occur via the Recognition Category F ICs if multiple fission product barriers are challenged due the inability to monitor one or more safety functions. Escalation may also occur via the Recognition Category A ICs.

ECL Assignment Attributes: 3.1.2.B

Developer Notes:

In the PWR parameter list column, the "site-specific number" should reflect the minimum number of steam generators necessary for plant cooldown and shutdown. This criterion may also specify whether the level value should be wide-range, narrow- range or both, depending upon the monitoring requirements in emergency operating procedures.

SA5

Initiating Condition - ALERT

Automatic (trip [*PWR*] or scram [*BWR*]) fails to shutdown the reactor and challenge to RCS barrier [*PWR*] or challenge to primary containment barrier [*BWR*].

Operating Mode Applicability: Power Operation

Example Emergency Action Levels:

(1) a. An automatic reactor (trip [*PWR*] or scram [*BWR*]) failed to shutdown the reactor as indicated by (site-specific indications of reactor not shutdown).

AND

b. RCS pressure reaches (site-specific lowest pressurizer PORV pressure setpoint). [*PWR*]

Suppression pool temperature reaches (site-specific Boron Injection Initiation Temperature (BIIT)). [*BWR*]

Basis:

This IC describes a failure of the reactor protection system to automatically (trip [*PWR*] or scram [*BWR*]) the reactor, and reactor heat generation is sufficient to challenge the integrity of the RCS barrier [*PWR*], or primary containment barrier [*BWR*]. This represents an actual or potential substantial degradation of the level of safety of the plant.

An Alert is warranted because:

[*PWR*] – RCS pressure has approached the design limits of the RCS and fuel cladding. Protection of RCS and fuel cladding integrity is now dependent upon operation of a pressure relief valve(s) until operators can shut down the reactor. There are attendant concerns including the loss of RCS mass (reactor coolant) when the pressure relief valve(s) lifts and the possibility that a valve will not fully close.

[*BWR*] – Exceeding the Boron Injection Initiation Temperature (BIIT) under failure to scram conditions is a fundamental indication that heat is being added to the containment at a rate that could ultimately challenge primary containment integrity. The BIIT is a function of reactor power. It is utilized to establish requirements for boron injection and deliberately lowering RPV water level following a failure-to-scram. If boron injection is initiated before suppression pool temperature reaches the BIIT, emergency RPV depressurization may be precluded at lower reactor power levels.

The BIIT is the greater of:

- The highest suppression pool temperature at which initiation of boron injection will permit injection of the Hot Shutdown Boron Weight of boron before suppression pool temperature exceeds the Heat Capacity Temperature Limit.

- The suppression pool temperature at which a reactor scram is required by plant Technical Specifications.

A variety of factors can affect the plant response to the failure of an automatic (trip [*PWR*] or scram [*BWR*]) – the current power level, performance of mitigation equipment or actions, availability of the condenser, etc. For the events of greatest concern, a failure to (trip [*PWR*] or scram [*BWR*]) from a high-power condition with the condenser unavailable (isolated), it is expected that suppression pool temperature would exceed the BIIT [BWR] / a pressurizer PORV would lift [*PWR*] very shortly after event initiation (i.e., within minutes). For this reason, the applicability of this IC over IC SU5 should be readily apparent during the initial emergency classification assessment period.

Escalation of this event to a Site Area Emergency would be via IC SS5, due to prolonged power generation leading to an extreme challenge of either core cooling or RCS heat removal, or the Recognition Category F ICs/EALs.

ECL Assignment Attributes: 3.1.2.B

Developer Notes:

For emergency classification purposes, the reactor should be considered shutdown when it is producing less heat than the maximum decay heat load for which the ECCS is designed (typically 3 to 5% power). For plants using the Westinghouse CSFSTs, EALs 1.a should use the reactor power criteria associated with a Subcriticality Red Path. For BWRs, this EAL should be the APRM downscale trip setpoint.

This IC is applicable in any Mode in which the actual reactor power level could exceed the power level at which the reactor is considered shutdown. A PWR that specifies a shutdown reactor power level that is less than or equal to the reactor power level that defines the lower bound of Power Operation (Mode 1) will need to include Startup (Mode 2) in the Operating Mode Applicability. For example, if the reactor is considered to be shutdown at 3% and Power Operation starts at >5%, then the IC is also applicable in Startup Mode.

For additional background information, refer to NUREG-1780, *Regulatory Effectiveness of the Anticipated Transient Without Scram Rule*.

SS1

Initiating Condition - SITE AREA EMERGENCY

Loss of all offsite and all onsite AC power to emergency busses for 15 minutes or longer.

Operating Mode Applicability: Power Operation, Startup, Hot Standby, Hot Shutdown

Example Emergency Action Levels:

Note: The Emergency Director should declare the emergency promptly upon determining that the applicable time has been exceeded, or will likely be exceeded.

(1) Loss of **ALL** offsite and **ALL** onsite AC power to (site-specific emergency busses) for 15 minutes or longer.

Basis:

A loss of all AC power compromises all safety systems requiring electric power including those necessary for emergency core cooling, containment heat removal/pressure control, spent fuel heat removal and the ultimate heat sink. In addition, fission product barrier monitoring capabilities may be degraded under these conditions. This IC represents a condition that involves actual or likely major failures of plant functions needed for the protection of the public.

Fifteen minutes was selected as a threshold to exclude transient or momentary power losses.

Escalation to General Emergency is via ICs AG1, FG1 or SG1.

ECL Assignment Attributes: 3.1.3.B

Developer Notes:

The "site-specific emergency busses" are the busses fed by offsite or emergency AC power sources that supply power to the electrical distribution system that powers safety systems. There is typically 1 emergency buss per train of safety systems.

For a backup power source comprised of two or more generators (e.g., two 50%-capacity generators sized to feed 1 emergency buss), the EAL and/or Basis section must specify that all generators for that source are operating.

The EAL and/or Basis section may specify use of a non-safety-related power source provided that operation of this source is controlled in accordance with abnormal or emergency operating procedures.

At multi-unit stations, the EALs should allow credit for compensatory measures that are proceduralized and can be implemented within 15 minutes. Consider capabilities such as power source cross-ties, "swing" generators, other power sources described in abnormal or emergency operating procedures, etc. Plants that have a proceduralized capability to cross-tie AC power from an offsite power supply of a companion unit may take credit for the redundant power

source in the associated EAL for this IC. These stations must also consider the impact of this condition on safety system functions shared between multiple units.

As used above, safety systems are those systems required for safe plant operation, cooling down the unit and placing it in the cold shutdown condition. These systems include the ECCS; on-site emergency AC and DC power sources and distribution systems; and associated support systems necessary for operation.

SS2

Initiating Condition - SITE AREA EMERGENCY

Loss of all vital DC power for 15 minutes or longer.

Operating Mode Applicability: Power Operation, Startup, Hot Standby, Hot Shutdown

Example Emergency Action Levels:

Note: The Emergency Director should declare the emergency promptly upon determining that the applicable time has been exceeded, or will likely be exceeded.

(1) Indicated voltage is less than (site-specific bus voltage value) on **ALL** (site-specific vital DC busses) for 15 minutes or longer.

Basis:

Vital DC power provides monitoring and control capabilities for safety systems needed for the protection of the public. A loss of vital DC power would therefore compromise the ability to monitor and control these systems. A prolonged loss of all vital DC power could lead to core uncovery and, ultimately, a loss of containment integrity.

Fifteen minutes was selected as a threshold to exclude transient or momentary power losses.

Escalation to a General Emergency would occur via IC AG1, FG1 or SG2.

ECL Assignment Attributes: 3.1.3.B

Developer Notes:

The "site-specific bus voltage value" should be based on the minimum bus voltage necessary for adequate operation of safety system equipment. This voltage value should incorporate a margin of at least 15 minutes of operation before the onset of inability to operate those loads. This voltage is usually near the minimum voltage selected when battery sizing is performed.

The typical value for an entire battery set is approximately 105 VDC. For a 60 cell string of batteries, the cell voltage is approximately 1.75 Volts per cell. For a 58 string battery set, the minimum voltage is approximately 1.81 Volts per cell.

The "site-specific vital DC busses" are the DC busses that provide monitoring and control capabilities for safety systems.

As used above, safety systems are those systems required for safe plant operation, cooling down the unit and placing it in the cold shutdown condition. These systems include the ECCS; on-site emergency AC and DC power sources and distribution systems; and associated support systems necessary for operation.

SS5

Initiating Condition – SITE AREA EMERGENCY

Automatic (trip [*PWR*] or scram [*BWR*]) fails to shutdown the reactor and extreme challenge to core cooling or RCS heat removal.

Operating Mode Applicability: Power Operation

Example Emergency Action Levels:

(1) a. An automatic reactor (trip [*PWR*] or scram [*BWR*]) failed to shutdown the reactor as indicated by (site-specific indications of reactor not shutdown).

AND

b. **EITHER** of the following:

- (Site-specific indication that the core cooling [PWR] / RPV water level [BWR] key safety function is extremely challenged.)
- (Site-specific indication that the RCS heat removal key safety function is extremely challenged.)

Basis:

Under this condition, the reactor is producing more heat than the maximum decay heat load for which the ECCS is designed, and initial efforts to bring the reactor subcritical have been unsuccessful. There is now an extreme challenge to a key safety function(s) needed for the protection of the public, and an event trajectory that could lead to core damage if further mitigation actions are unsuccessful. For this reason, the Site Area Emergency declaration is warranted.

In some instances, the emergency classification resulting from this IC/EAL may be higher than that resulting from an assessment of the plant response against the Recognition Category F ICs/EALs. This is appropriate in that the Recognition Category F ICs/EALs do not address the additional threat posed to one or more barriers by the inability to bring the reactor subcritical following a (trip [*PWR*] or scram [*BWR*]). The inclusion of this IC/EAL ensures the timely declaration of a Site Area Emergency in response to an event involving a failure to promptly (trip [*PWR*] or scram [*BWR*]) the reactor.

Escalation of the emergency is through IC FG1.

ECL Assignment Attributes: 3.1.3.B

Developer Notes:

For emergency classification purposes, the reactor should be considered shutdown when it is producing less heat than the maximum decay heat load for which the ECCS is designed (typically 3 to 5% power). For plants using the Westinghouse CSFSTs, EALs 1.a should use the

reactor power criteria associated with a Subcriticality Red Path. For BWRs, this EAL should be the APRM downscale trip setpoint.

This IC is applicable in any Mode in which the actual reactor power level could exceed the power level at which the reactor is considered shutdown. A PWR that specifies a shutdown reactor power level that is less than or equal to the reactor power level that defines the lower bound of Power Operation (Mode 1) will need to include Startup (Mode 2) in the Operating Mode Applicability. For example, if the reactor is considered to be shutdown at 3% and Power Operation starts at >5%, then the IC is also applicable in Startup Mode.

For EAL #1.b – First bullet:

[*BWR*] – Reactor vessel water level cannot be restored and maintained above Minimum Steam Cooling RPV Water Level (as described in the EOP bases).

[*PWR*] – Insert site-specific values for an incore/core exit thermocouple temperature and/or reactor vessel water level indicative of an extreme challenge to core cooling. Sites may use a reactor vessel water level that corresponds to approximately the middle of active fuel and/or incore/core exit thermocouple temperatures greater than 1,200^{o}F.

For plants that have implemented Westinghouse Owners Group Emergency Response Guidelines, use the values for the Core Cooling Red path.

For EAL #1.b – Second bullet:

[*BWR*] - Use the Heat Capacity Temperature Limit. This addresses the inability to remove heat via the main condenser and the suppression pool due to high pool water temperature.

[*PWR*] - An extreme challenge to RCS heat removal means that heat removal via the steam generators has (or soon will) become ineffective. An extreme challenge exists if the minimum level in the minimum number of steam generators cannot be maintained. Emergency (auxiliary) feedwater flow and/or steam generator level values should be determined based on the above description of the condition.

For plants that have implemented Westinghouse Owners Group Emergency Response Guidelines, use the values for the Heat Sink Red path.

SG1

Initiating Condition - GENERAL EMERGENCY

Prolonged loss of all offsite and all onsite AC power to emergency busses.

Operating Mode Applicability: Power Operation, Startup, Hot Standby, Hot Shutdown

Example Emergency Action Levels:

Note: The Emergency Director should declare the emergency promptly upon determining that the applicable time has been exceeded, or will likely be exceeded.

(1) a. Loss of **ALL** offsite and **ALL** onsite AC power to (site-specific emergency busses).

AND

b. **EITHER** of the following:

- Restoration of at least one emergency bus in less than (site-specific hours) is not likely.
- (Site-specific indication of degraded core cooling [*BWR*] / (Site-specific indication that core cooling is severely challenged [*PWR*].)

Basis:

This IC provides a General Emergency escalation path for a prolonged loss of power to all AC emergency busses. A loss of all AC power compromises all safety systems requiring electric power including those necessary for emergency core cooling, containment heat removal/pressure control, spent fuel heat removal and the ultimate heat sink. A prolonged loss of these busses will lead to a loss of one or more fission product barriers. In addition, fission product barrier monitoring capabilities may be degraded under these conditions.

<u>EAL #1.b – First bullet</u>

This EAL will prompt a General Emergency declaration prior to the end of the analyzed station blackout coping period if a power source cannot be restored by that time. Beyond this coping period, plant responses and event trajectory are subject to greater uncertainty, and there is an increased likelihood of the degradation of multiple fission product barriers. This EAL will necessitate a declaration prior to IC FG1 being met and thus allow more time for implementation of offsite protective actions.

The estimate for restoring at least one emergency bus should be based on a realistic appraisal of the situation. Mitigation actions with a low probability of success should not be used as a basis for delaying a classification upgrade. The goal is to maximize the time available to prepare for, and implement, public protective actions.

ECL Assignment Attributes: 3.1.4.B

Developer Notes:

EAL #1.b – First bullet - The site-specific hours to restore AC power should be based on the station blackout coping analysis performed in accordance with 10 CFR § 50.63 and Regulatory Guide 1.155, *Station Blackout*. Appropriate allowance for offsite emergency response, including evacuation of surrounding areas, should be considered. Although this IC may be viewed as redundant to the Fission Product Barrier ICs, its inclusion is necessary to better assure timely recognition and emergency declaration.

For EAL #1.b – Second bullet:

[*BWR*] – Reactor vessel water level cannot be restored and maintained above the top of active fuel.

[*PWR*] – Insert site-specific values for an incore/core exit thermocouple temperature and/or reactor vessel water level indicative of a severe challenge to core cooling. Sites may use a reactor vessel water level that corresponds to the top of active fuel and/or incore/core exit thermocouple temperatures greater than 700°F.

For plants that have implemented Westinghouse Owners Group Emergency Response Guidelines, use the values for the Core Cooling Orange path.

SG2

Initiating Condition - GENERAL EMERGENCY

Loss of all AC and DC emergency busses for 15 minutes or longer.

Operating Mode Applicability: Power Operation, Startup, Hot Standby, Hot Shutdown

Example Emergency Action Levels:

Note: The Emergency Director should declare the emergency promptly upon determining that the applicable time has been exceeded, or will likely be exceeded.

(1) a. Loss of **ALL** offsite and **ALL** onsite AC power to (site-specific emergency busses) for 15 minutes or longer.

AND

b. Indicated voltage is less than (site-specific bus voltage value) on ALL (site-specific vital DC busses) for 15 minutes or longer.

Basis:

This IC provides for escalation to a General Emergency in the event of a concurrent loss of power to all AC and DC emergency busses.

A loss of all AC power compromises all safety systems requiring electric power including those necessary for emergency core cooling, containment heat removal/pressure control, spent fuel heat removal and the ultimate heat sink. A loss of vital DC power compromises the ability to monitor and control safety systems. A sustained loss of both AC and DC busses will lead to a loss of multiple fission product barriers.

Fifteen minutes was selected as a threshold to exclude transient or momentary power losses. The 15-minute EAL assessment clock for this EAL begins at the point when EAL #1 and EAL #2 are both met.

ECL Assignment Attributes: 3.1.4.B

Developer Notes:

The "site-specific emergency busses" are the busses fed by offsite or emergency AC power sources that supply power to the electrical distribution system that powers safety systems. There is typically 1 emergency buss per train of safety systems.

For a backup power source comprised of two or more generators (e.g., two 50%-capacity generators sized to feed 1 emergency buss), the EAL and/or Basis section must specify that all generators for that source are operating.

The EAL and/or Basis section may specify use of a non-safety-related power source provided that operation of this source is controlled in accordance with abnormal or emergency operating procedures.

The "site-specific bus voltage value" should be based on the minimum bus voltage necessary for adequate operation of safety system equipment. This voltage value should incorporate a margin of at least 15 minutes of operation before the onset of inability to operate those loads. This voltage is usually near the minimum voltage selected when battery sizing is performed.

The typical value for an entire battery set is approximately 105 VDC. For a 60 cell string of batteries, the cell voltage is approximately 1.75 Volts per cell. For a 58 string battery set, the minimum voltage is approximately 1.81 Volts per cell.

The "site-specific vital DC busses" are the DC busses that provide monitoring and control capabilities for safety systems.

As used above, safety systems are those systems required for safe plant operation, cooling down the unit and placing it in the cold shutdown condition. These systems include the ECCS; on-site emergency AC and DC power sources and distribution systems; and associated support systems necessary for operation.

This IC and EAL were added to Revision 6 to address operating experience from the accident at Fukushima Diiachi.

APPENDIX A – ACRONYMS AND ABBREVIATIONS

AC ..... Alternating Current
AOP ..... Abnormal Operating Procedure
APRM ..... Average Power Range Meter
ATWS ..... Anticipated Transient Without Scram
B&W ..... Babcock and Wilcox
BIIT ..... Boron Injection Initiation Temperature
BWR ..... Boiling Water Reactor
CDE ..... Committed Dose Equivalent
CFR ..... Code of Federal Regulations
CTMT/CNMT ..... Containment
CSF ..... Critical Safety Function
CSFST ..... Critical Safety Function Status Tree
DC ..... Direct Current
EAL ..... Emergency Action Level
ECCS ..... Emergency Core Cooling System
ECL ..... Emergency Classification Level
EOF ..... Emergency Operations Facility
EOP ..... Emergency Operating Procedure
EPA ..... Environmental Protection Agency
EPG ..... Emergency Procedure Guideline
EPIP ..... Emergency Plan Implementing Procedure
EPR ..... Evolutionary Power Reactor
EPRI ..... Electric Power Research Institute
ERG ..... Emergency Response Guideline
FEMA ..... Federal Emergency Management Agency
FSAR ..... Final Safety Analysis Report
GE ..... General Emergency
HCTL ..... Heat Capacity Temperature Limit
HPCI ..... High Pressure Coolant Injection
HSI ..... Human System Interface
IC ..... Initiating Condition
ID ..... Inside Diameter
IPEEE ..... Individual Plant Examination of External Events (Generic Letter 88-20)
ISFSI ..... Independent Spent Fuel Storage Installation
Keff ..... Effective Neutron Multiplication Factor
LCO ..... Limiting Condition of Operation
LOCA ..... Loss of Coolant Accident
MCR ..... Main Control Room
MSIV ..... Main Steam Isolation Valve
MSL ..... Main Steam Line
mR, mRem, mrem, mREM ..... milli-Roentgen Equivalent Man
MW ..... Megawatt
NEI ..... Nuclear Energy Institute
NPP ..... Nuclear Power Plant
NRC ..... Nuclear Regulatory Commission
NSSS ..... Nuclear Steam Supply System

NORAD ..... North American Aerospace Defense Command
(NO)UE ..... (Notification Of) Unusual Event
NUMARC[4] ..... Nuclear Management and Resources Council
OBE ..... Operating Basis Earthquake
OCA ..... Owner Controlled Area
ODCM/ODAM ..... Offsite Dose Calculation (Assessment) Manual
ORO ..... Off-site Response Organization
PA ..... Protected Area
PACS ..... Priority Actuation and Control System
PAG ..... Protective Action Guideline
PICS ..... Process Information and Control System
PRA/PSA ..... Probabilistic Risk Assessment / Probabilistic Safety Assessment
PWR ..... Pressurized Water Reactor
PS ..... Protection System
PSIG ..... Pounds per Square Inch Gauge
R ..... Roentgen
RCC ..... Reactor Control Console
RCIC ..... Reactor Core Isolation Cooling
RCS ..... Reactor Coolant System
Rem, rem, REM ..... Roentgen Equivalent Man
RETS ..... Radiological Effluent Technical Specifications
RPS ..... Reactor Protection System
RPV ..... Reactor Pressure Vessel
RVLIS ..... Reactor Vessel Level Indicating System
RWCU ..... Reactor Water Cleanup
SAR ..... Safety Analysis Report
SAS ..... Safety Automation System
SBO ..... Station Blackout
SCBA ..... Self-Contained Breathing Apparatus
SG ..... Steam Generator
SI ..... Safety Injection
SICS ..... Safety Information and Control System
SPDS ..... Safety Parameter Display System
SRO ..... Senior Reactor Operator
TEDE ..... Total Effective Dose Equivalent
TOAF ..... Top of Active Fuel
TSC ..... Technical Support Center
WOG ..... Westinghouse Owners Group

[4] NUMARC was a predecessor organization of the Nuclear Energy Institute (NEI).

APPENDIX B – DEFINITIONS

The following definitions are taken from Title 10, Code of Federal Regulations, or related regulatory guidance documents.

Alert: Events are in progress or have occurred which involve an actual or potential substantial degradation of the level of safety of the plant or a security event that involves probable life threatening risk to site personnel or damage to site equipment because of HOSTILE ACTION. Any releases are expected to be limited to small fractions of the EPA PAG exposure levels.

General Emergency: Events are in progress or have occurred which involve actual or IMMINENT substantial core degradation or melting with potential for loss of containment integrity or HOSTILE ACTION that results in an actual loss of physical control of the facility. Releases can be reasonably expected to exceed EPA PAG exposure levels offsite for more than the immediate site area.

Notification of Unusual Event (NOUE)[5]: Events are in progress or have occurred which indicate a potential degradation of the level of safety of the plant or indicate a security threat to facility protection has been initiated. No releases of radioactive material requiring offsite response or monitoring are expected unless further degradation of safety systems occurs.

Site Area Emergency: Events are in progress or have occurred which involve actual or likely major failures of plant functions needed for protection of the public or HOSTILE ACTION that results in intentional damage or malicious acts; 1) toward site personnel or equipment that could lead to the likely failure of or; 2) that prevent effective access to, equipment needed for the protection of the public. Any releases are not expected to result in exposure levels which exceed EPA PAG exposure levels beyond the site boundary.

The following are key terms necessary for overall understanding the NEI 99-01 emergency classification scheme.

Emergency Action Level (EAL): A pre-determined, site-specific, observable threshold for an Initiating Condition that, when met or exceeded, places the plant in a given emergency classification level.

Emergency Classification Level (ECL): One of a set of names or titles established by the US Nuclear Regulatory Commission (NRC) for grouping off-normal events or conditions according to (1) potential or actual effects or consequences, and (2) resulting onsite and offsite response actions. The emergency classification levels, in ascending order of seriousness, are called:

- Notification of Unusual Event (NOUE)
- Alert
- Site Area Emergency (SAE)
- General Emergency (GE)

[5] This term is sometimes shortened to Unusual Event (UE) or other similar site-specific terminology.

Fission Product Barrier Threshold: A pre-determined, site-specific, observable threshold indicating the loss or potential loss of one or more of the fission product barriers.

Initiating Condition (IC): An event or condition that meets the definition and attributes of one of the four emergency classification levels based on potential or actual effects or consequences.

Selected terms used in Initiating Condition and Emergency Action Level statements are set in all capital letters (e.g., ALL CAPS). These words are defined terms that have specific meanings as used in this document. The definitions of these terms are provided below.

CONFINEMENT BOUNDARY: (Insert a site-specific definition for this term.) **Developer Note** – The barrier(s) between spent fuel and the environment once the spent fuel is processed for dry storage.

CONTAINMENT CLOSURE: (Insert a site-specific definition for this term.) **Developer Note** – The procedurally defined conditions or actions taken to secure containment (primary or secondary for BWR) and its associated structures, systems, and components as a functional barrier to fission product release under shutdown conditions.

EXPLOSION: A rapid, violent and catastrophic failure of a piece of equipment due to combustion, chemical reaction or overpressuization that generates sufficient force to damage surrounding permanent structures, systems, or components. A release of steam from a steamline (or a pressurized high temperature water line) or an electrical component failure (caused by short circuits, grounding, arcing, etc.) should not automatically be considered an explosion. Such events require a post-event inspection to determine if the attributes on an explosion are present.

FAULTED: The term applied to a PWR steam generator that has a steam leak on the secondary side of sufficient size to cause an uncontrolled drop in steam generator pressure or the steam generator to become completely depressurized.

FIRE: Combustion characterized by heat and light. Sources of smoke such as slipping drive belts or overheated electrical equipment do not constitute FIRES. Observation of flame is preferred but is NOT required if large quantities of smoke and heat are observed.

HOSTAGE: A person(s) held as leverage against the station to ensure that demands will be met by the station.

HOSTILE ACTION: An act toward a NPP or its personnel that includes the use of violent force to destroy equipment, take HOSTAGES, and/or intimidate the licensee to achieve an end. This includes attack by air, land, or water using guns, explosives, PROJECTILEs, vehicles, or other devices used to deliver destructive force. Other acts that satisfy the overall intent may be included. HOSTILE ACTION should not be construed to include acts of civil disobedience or felonious acts that are not part of a concerted attack on the NPP. Non-terrorism-based EALs should be used to address such activities (i.e., this may include violent acts between individuals in the owner controlled area).

HOSTILE FORCE: One or more individuals who are engaged in a determined assault, overtly or by stealth and deception, equipped with suitable weapons capable of killing, maiming, or causing destruction.

IMMINENT: The trajectory of events or conditions is such that an EAL will be met regardless of anticipated or in-progress mitigation or corrective actions. Where IMMINENT timeframes are specified, they shall apply.

INDEPENDENT SPENT FUEL STORAGE INSTALLATION (ISFSI): A complex that is designed and constructed for the interim storage of spent nuclear fuel and other radioactive materials associated with spent fuel storage.

NORMAL LEVELS: As applied to radiological IC/EALs, the highest reading in the past twenty-four hours excluding the current peak value.

OWNER CONTROLLED AREA: (Insert a site-specific definition for this term.) **Developer Note** – This term is typically taken to mean the site property owned by, or otherwise under the control of, the licensee.

PROJECTILE: An object directed toward a NPP that could cause concern for its continued operability, reliability, or personnel safety.

PROTECTED AREA: (Insert a site-specific definition for this term.) **Developer Note** – This term is typically taken to mean the area under continuous access monitoring and control, and armed protection as described in the site security plan.

REFUELING PATHWAY: (Insert a site-specific definition for this term.) **Developer Note** – This description should include all the cavities, tubes, canals and pools through which irradiated fuel may be moved, but not including the reactor vessel.

SECURITY CONDITION: Any Security Event as listed in the approved security contingency plan that constitutes a threat/compromise to site security, threat/risk to site personnel, or a potential degradation to the level of safety of the plant. A SECURITY CONDITION does not involve a HOSTILE ACTION.

SEISMIC EVENT: An earthquake of sufficient magnitude to be recognized based on a consensus of control room operators on duty at the time or detected by seismic monitoring instrumentation with appropriate verification. In cases where event verification is necessary (e.g., motion detected by instrumentation but not felt by the Control Room staff), the occurrence of a seismic event may be confirmed through contact with the National Earthquake Information Center, a regional seismic monitoring agency or other source deemed credible by the Emergency Director (e.g., news media reports).

SIGNIFICANT TRANSIENT: An UNPLANNED event involving one or more of the following: (1) automatic turbine runback greater than 25% thermal reactor power, (2) electrical load rejection greater than 25% full electrical load, (3) reactor scram/trip, (4) Safety Injection actuation, or (5) thermal power oscillations greater than 10%.

UNISOLABLE: An open or breached system line that cannot be isolated, remotely or locally.

UNPLANNED: A parameter change or an event that is not 1) the result of an intended evolution or 2) an expected plant response to a transient. The cause of the parameter change or event may be known or unknown.

VALID: An indication, report, or condition, is considered to be VALID when it is verified by (1) an instrument channel check, (2) indications on related or redundant indicators, or (3) by direct observation by plant personnel, such that doubt related to the indicator's operability, the condition's existence, or the report's accuracy is removed. Implicit in this definition is the need for timely assessment.

VISIBLE DAMAGE: Damage to a structure containing safety systems of sufficient visual impact to cause doubt about the operability of safety systems within the structure. Examples include a partial or total collapse of the structure, or a structure engulfed in flames; and do not include observations such as isolated or localized concrete spalling, metal deformation or soot deposits. This is intended to be a brief assessment not requiring lengthy analysis or quantification of the damage.

APPENDIX C – PERMANENTLY DEFUELED STATION ICS/EALS

Recognition Category PD provides a stand-alone set of IC/EALs for a Permanently Defueled Station. Applicable ICs and EALs from Recognition Categories A, C, F, S, and H were included in Recognition Category PD to address a spectrum of the events that may occur at a permanently defueled station.

A permanently defueled station is essentially a spent fuel storage facility. It is assumed that the spent fuel was generated by an operating nuclear power station under a 10 CFR § 50 license, and that the station has ceased operations and intends to store the spent fuel in the facility for some period of time. In these cases, the spent fuel is stored in a pool of water that serves as both the cooling medium for decay heat and shielding from direct radiation. These primary functions of the spent fuel storage pool are the focus of Recognition Category PD.

When in the permanently defueled condition, the licensee receives approval from the NRC for exemption from specific emergency planning requirements. The limited source term and lower relative risks associated with spent fuel pool storage (relative to reactor at-power operation) are the basis for maintaining only an onsite emergency plan. These factors, and the associated analyses of radioactive releases associated with plausible accidents, are documented in the station's Final Safety Analysis Report, as updated.

Recognition Category PD uses the emergency classification levels provided by NUREG-0654/FEMA–REP-1. The NOUE emergency classification levels provide for an increased awareness of abnormal conditions. The Alert emergency classification levels are specific to the actual or potential effects on the spent fuel in storage. In a permanently defueled condition, the source term and release motive force are insufficient to warrant a Site Area Emergency or General Emergency classification.

Section 3 of NEI 99-01 emphasizes the need for accurate assessment and classification of events, recognizing that over-classification, as well as under-classification, is to be avoided. In the permanently defueled condition, these conditions are primarily associated with the spent fuel, the spent fuel pool systems used to provide cooling and shielding. Effluent IC/EALs were included, however, to provide a basis for classifying events that cannot be readily classified based on an observable event or condition alone.

Table D-1: Recognition Category "PD" Initiating Condition Matrix

UNUSUAL EVENT	ALERT
PD-AU1 Radioactivity release greater than 2 times the (site-specific effluent release controlling document) limits for 60 minutes or longer. Op. *Modes: Not Applicable*	**PD-AA1** Offsite dose greater than 10 mrem TEDE or 50 mrem thyroid CDE. *Op. Modes: Not* Applicable
PD-AU2 UNPLANNED rise in plant radiation levels. *Op. Modes: Not Applicable*	**PD-AA2** UNPLANNED rise in plant radiation levels that impedes plant access required to maintain spent fuel integrity. *Op. Modes: Not Applica*ble
PD-SU1 UNPLANNED spent fuel pool temperature rise. Op. *Modes: Not Applicable*	
PD-HU1 Confirmed SECURITY CONDITION or threat. *Op. Modes: Not Applicable*	**PD-HA1** HOSTILE ACTION within the OWNER CONTROLLED AREA or airborne attack threat within 30 minutes. *Op. Modes: Not* Applicable
PD-HU2 Natural or destructive phenomena affecting the ability to maintain spent fuel integrity. *Op.* Modes*: Not Applicable*	
PD-HU3 Other conditions exist which in the judgment of the Emergency Director warrant declaration of a (NO)UE. *Op. Modes: Not Applicable*	**PD-HA3** Other conditions exist which in the judgment of the Emergency Director warrant declaration of an Alert. *Op. Modes: Not* Applicable

Table intended for use by EAL developers. Inclusion in licensee documents is not required.

PD-AU1

Initiating Condition - NOTIFICATION OF UNUSUAL EVENT

Radioactivity release greater than 2 times the (site-specific effluent release controlling document) limits for 60 minutes or longer.

Operating Mode Applicability: All

Example Emergency Action Levels: (1 or 2 or 3)

Notes:

- The Emergency Director should declare the emergency promptly upon determining that the applicable time has been exceeded, or will likely be exceeded.
- In the absence of data to the contrary, assume that the release duration has exceeded the applicable time if an ongoing release is detected and the release start time is unknown.
- If the associated release path to the environment has been isolated, the effluent monitor reading is no longer VALID for classification purposes.

(1) Reading on **ANY** effluent radiation monitor greater than (2 times the site-specific effluent controlling document limits) for 60 minutes or longer:

(site-specific monitor list and threshold values corresponding to 2 times the controlling document limits)

(2) Confirmed sample analysis for a gaseous or liquid release indicates a concentration or release rate greater than 2 times (site-specific effluent release controlling document limits) for 60 minutes or longer.

Basis:

This IC addresses a potential decrease in the level of safety of the plant as indicated by a low-level radiological release that exceeds regulatory commitments for an extended period of time (e.g., an uncontrolled release). It includes any radiological release, gaseous or liquid, monitored or un-monitored, including those for which a radioactivity discharge permit is normally prepared.

Nuclear power plants incorporate design features intended to control the release of radioactive effluents to the environment. Further, there are administrative controls established to prevent unintentional releases, and to control and monitor intentional releases. The occurrence of an extended, uncontrolled radioactive release to the environment is indicative of degradation in these features and/or controls.

The effluent EALs are also included to provide a basis for classifying events that cannot be readily classified on the basis of plant conditions alone. The inclusion of both types of EALs more fully addresses the spectrum of possible events and conditions.

Classification based on effluent monitor readings assumes that a release path to the environment is established. If the associated release path to the environment has been isolated, the effluent monitor reading is no longer VALID for emergency classification purposes.

Releases should not be prorated or averaged. For example, a release exceeding 4 times release limits for 30 minutes does not meet the EAL.

EAL #1 - This EAL addresses normally occurring continuous radioactivity releases from monitored gaseous or liquid effluent pathways.

EAL #2 - This EAL addresses uncontrolled gaseous or liquid releases that are detected by sample analyses or environmental surveys, particularly on unmonitored pathways (e.g., spills of radioactive liquids into storm drains, heat exchanger leakage in river water systems, etc.).

ECL Assignment Attributes: 3.1.1.B

Developer Notes:

In EAL #1, the "site-specific monitor list" should include the effluent monitors described in the RETS or ODCM.

The "controlling document" referenced above is the Radiological Effluent Technical Specifications (RETS) or, for plants that have implemented Generic Letter 89-01[6], the Offsite Dose Calculation Manual (ODCM). As appropriate, the RETS or ODCM methodology should be used for establishing the monitor thresholds for this IC. In particular, the effluent monitors to be included should be those addressed in the RETS or ODCM.

Some sites may find it advantageous to address gaseous and liquid releases with separate EALs.

Radiation monitor readings should reflect values that correspond to a radiological release exceeding 2 times a release control limit. The controlling document typically describes methodologies for determining effluent radiation monitor setpoints; these methodologies should be used to determine EAL values.

Calculations supporting the release rates specified in the EAL values should be provided which quantify expected doses at the Restricted Area Boundary. The major isotope of concern in the permanently defueled condition is Kr-85.

It is recognized that some effluent radiation monitors may be off-scale high during the condition described by this IC (i.e., the monitor cannot detect or readout a value greater than 2 times the limit). In those cases, EAL values should be determined with a margin sufficient to ensure that accurate monitor reading is available. For example, an EAL monitor reading might be set at 90% to 95% of the highest accurate monitor reading.

Indications from a real-time dose projection system are not included in the generic EALs. Many licensees do not have this capability. For those that do, the capability may not be within the scope of the plant Technical Specifications. A licensee may request to include an EAL using real-time dose projection system results; approval may be granted on a case-by-case basis.

[6] *Implementation of Programmatic Controls for Radiological Effluent Technical Specifications in the Administrative Controls Section of the Technical Specifications and the Relocation of Procedural Details of RETS to the Offsite Dose Calculation Manual or to the Process Control Program*

Indications from a perimeter monitoring system are not included in the generic EALs. Many licensees do not have this capability. For those that do, these monitors may not be controlled and maintained to the same level as plant equipment, or within the scope of the plant Technical Specifications. In addition, readings may be influenced by environmental or other factors. A licensee may request to include an EAL using a perimeter monitoring system; approval may be granted on a case-by-case basis.

PD-AU2

Initiating Condition - NOTIFICATION OF UNUSUAL EVENT

UNPLANNED rise in plant radiation levels.

Operating Mode Applicability: Not Applicable

Example Emergency Action Levels:

(1) a. UNPLANNED water level drop in the spent fuel pool as indicated by (site-specific level or indication).

AND

b. Area Radiation Monitor reading rise on (site-specific list).

(2) Area radiation monitor reading or survey result indicates an UNPLANNED rise of 25 mR/hr over NORMAL LEVELS.

Basis:

This IC addresses elevated plant radiation levels caused by a decrease in water level above irradiated (spent) fuel or other UNPLANNED events. The increased radiation levels are indicative of a minor loss in the ability to control radiation levels within the plant or radioactive materials. Either condition is a potential degradation in the level of safety of the plant.

EAL #2 excludes radiation level increases that result from planned activities such as use of radiographic sources and movement of radioactive waste materials.

ECL Assignment Attributes: 3.1.1.B

Developer Notes:

For EAL #1 - Site-specific indications may include instrumentation values such as water level and area radiation monitor readings, and personnel reports. If available, video cameras may allow for remote observation. Depending on available instrumentation, the declaration may also be based on indications of water makeup rate and/or decreases in the level of a water storage tank.

For EAL #2 - The specified value of 25 mR/hr is arbitrary and may be set to another value for a specific application with appropriate justification.

PD-SU1

Initiating Condition - NOTIFICATION OF UNUSUAL EVENT

UNPLANNED spent fuel pool temperature rise.

Operating Mode Applicability: Not Applicable

Example Emergency Action Levels:

(1) UNPLANNED spent fuel pool temperature rise greater than (site-specific °F).

Basis:

Classification of this condition as a NOUE is warranted since it is a precursor to more serious event and represents a potential degradation in the level of safety of the plant. If uncorrected, boiling in the pool will occur, and result in a loss of pool level and increased radiation levels.

In-plant dose rates will drive escalation of the emergency via IC PD-AA2.

ECL Assignment Attributes: 3.1.1.A

Developer Notes:

The site-specific temperature should be chosen based on the starting point for fuel damage calculations in the SAR. Typically, this temperature is 125º to 150º F. Spent Fuel Pool temperature is normally maintained well below this point thus allowing time to correct the cooling system malfunction prior to classification.

PD-HU1

Initiating Condition - NOTIFICATION OF UNUSUAL EVENT

Confirmed SECURITY CONDITION or threat.

Operating Mode Applicability: Not Applicable

Example Emergency Action Levels:

(1) A SECURITY CONDITION that does not involve a HOSTILE ACTION as reported by the (site-specific security shift supervision).

(2) Notification of a credible security threat directed at the site.

(3) A validated notification from the NRC providing information of an aircraft threat.

Basis:

These events pose a threat to the safety of plant personnel, and possibly to equipment necessary for cooling of irradiated fuel. Security events which do not represent a potential degradation in the level of safety of the plant are adequately addressed by the requirements of 10 CFR § 73.71 or 10 CFR § 50.72. Security events assessed as HOSTILE ACTIONS are classifiable under IC PD-HA1.

Timely and accurate communications between Security Shift Supervision and the Control Room is essential for proper classification of a security-related event. Classification of these events will initiate appropriate threat-related notifications to plant personnel and OROs.

Security plans and terminology are based on the guidance provided by NEI 03-12, *Template for the Security Plan, Training and Qualification Plan, Safeguards Contingency Plan [and Independent Spent Fuel Storage Installation Security Program]*.

EAL #1 references (site-specific security shift supervision) because these are the individuals trained to confirm that a security event is occurring or has occurred. Training on security event confirmation and classification is controlled due to the nature of Safeguards and 10 CFR § 2.39 information.

EAL #2 addresses the receipt of a credible security threat. The credibility of the threat is assessed in accordance with (site-specific procedure).

EAL #3 addresses the threat from the impact of an aircraft on the plant. The NRC Headquarters Operations Officer (HOO) will communicate to the licensee if the threat involves an aircraft. The status and size of the plane may also be provided by NORAD through the NRC. Validation of the threat is performed in accordance with (site-specific procedure).

EALs should not incorporate Security-sensitive information. This includes information that may be advantageous to a potential adversary, such as the particulars concerning a specific threat or threat location.

Escalation to the Alert emergency classification level would be via IC HA1.

ECL Assignment Attributes: 3.1.1.A

Developer Notes:

The (site-specific security shift supervision) is the title of the on-shift individual responsible for supervision of the on-shift security force.

The (site-specific procedure) is the procedure(s) used by Control Room and/or Security personnel to determine if a security threat is credible, and to validate receipt of aircraft threat information.

EALs should not incorporate Security-sensitive information. This includes information that may be advantageous to a potential adversary, such as the particulars concerning a specific threat or threat location.

PD-HU2

Initiating Condition - NOTIFICATION OF UNUSUAL EVENT

Natural or destructive phenomena affecting the ability to maintain spent fuel integrity.

Operating Mode Applicability: Not Applicable

Example Emergency Action Levels:

(1) a. **ANY** of the following:

- SEISMIC EVENT
- FIRE
- EXPLOSION
- Release of a toxic, corrosive, asphyxiant or flammable gas
- Severe weather or flooding

AND

b. The event has the potential to affect, or has affected, equipment necessary to maintain spent fuel integrity.

Basis:

The events described in this IC are of sufficient magnitude to affect or potentially affect systems, structures or components necessary to maintain spent fuel integrity (e.g., spent fuel cooling system).

Gas Release

An Alert declaration is required if personnel are unable to enter the affected room/area in order to perform a required action (e.g., manual/local manipulation of a component) necessary to maintain spent fuel integrity (e.g., spent fuel cooling system).

An emergency declaration is not required if actions of an administrative or record keeping nature cannot be performed (e.g., normal rounds or routine inspections). In addition, a gas release precluding access to safety system equipment taken out-of-service for maintenance, repair or testing does not require an emergency declaration.

This IC does not require atmospheric sampling; it only requires the Emergency Director's judgment that the gas concentration in the affected room/area is sufficient to preclude required access. This judgment may be based on a variety of factors including an existing job hazard analysis, report of ill effects on personnel, advice from a subject matter expert or operating experience with the same or similar hazards. The Emergency Director should also consider the nature of the imposed access constraints; conservative or precautionary measures that would not impede timely performance of an urgently needed action do not meet the intent of this EAL.

An asphyxiant is a gas capable of reducing the level of oxygen in the body to dangerous levels. Most commonly, asphyxiants work by merely displacing air in an enclosed environment. This

reduces the concentration of oxygen below the normal level of around 19%, which can lead to breathing difficulties, unconsciousness or even death.

The use of extraordinary measures to facilitate personnel entry into an area (e.g., SCBAs) cannot be a factor in the emergency classification assessment.

This EAL does not apply to firefighting activities that automatically or manually activate a fire suppression system in an area.

Severe Weather or Flooding

Severe weather includes meteorological events such as hurricanes, tornados and strong storms (e.g., a microburst or a nor'easter) that can generate high winds or rates of precipitation.

Escalation of the emergency classification level could, depending upon the event, be based on any of the Alert ICs; PD-AA1, PD-AA2, PD-HA1 or PD-HA3.

ECL Assignment Attributes: 3.1.1.A and 3.1.1C

Developer Notes:

None

PD-HU3

Initiating Condition - NOTIFICATION OF UNUSUAL EVENT

Other conditions exist which in the judgment of the Emergency Director warrant declaration of a NOUE.

Operating Mode Applicability: Not Applicable

Example Emergency Action Levels:

(1) Other conditions exist which in the judgment of the Emergency Director indicate that events are in progress or have occurred which indicate a potential degradation of the level of safety of the plant or indicate a security threat to facility protection has been initiated. No releases of radioactive material requiring offsite response or monitoring are expected unless further degradation of safety systems occurs.

Basis:

This EAL addresses unanticipated conditions not addressed explicitly elsewhere but that warrant declaration of an emergency because conditions exist which are believed by the Emergency Director to fall under the emergency classification level description for a NOUE.

PD-AA1

Initiating Condition - ALERT

Offsite dose greater than 10 mrem TEDE or 50 mrem thyroid CDE.

Operating Mode Applicability: All

Example Emergency Action Levels: (1 or 2 or 3)

Notes:

- The Emergency Director should declare the emergency promptly upon determining that the applicable time has been exceeded, or will likely be exceeded.
- In the absence of data to the contrary, assume that the release duration has exceeded the applicable time if an ongoing release is detected and the release start time is unknown.
- If the associated release path to the environment has been isolated, the effluent monitor reading is no longer VALID for classification purposes.

(1) Reading on ANY of the following radiation monitors greater than the reading shown for 15 minutes or longer:

(site-specific monitor list and threshold values)

(2) Dose assessment using actual meteorology indicates doses greater than 10 mrem TEDE or 50 mrem thyroid CDE at or beyond (site-specific dose receptor point).

(3) Field survey results indicate **EITHER** of the following at or beyond (site-specific dose receptor point):

- Closed window dose rates greater than 10 mR/hr expected to continue for 60 minutes or longer.
- Analyses of field survey samples indicate thyroid CDE greater than 50 mrem for one hour of inhalation.

Basis:

This IC addresses a release of radioactivity that results in projected or actual doses at or beyond the site boundary greater than or equal to 1% of the EPA Protective Action Guides (PAGs). Releases of this magnitude represent an actual or potential substantial degradation of the level of safety of the plant as indicated by a radiological release that significantly exceeds regulatory limits (e.g., a significant uncontrolled release). The pre-calculated effluent monitor values presented in EAL #1 should be used for emergency classification assessments until dose assessment results are available.

This IC includes events or conditions involving a radiological release, whether gaseous or liquid, monitored or un-monitored. The effluent EALs are also included to provide a basis for classifying events that cannot be readily classified on the basis of plant conditions alone. The inclusion of both types of EALs more fully addresses the spectrum of possible events and

conditions.

The TEDE dose is set at 1% of the EPA PAG of 1,000 mrem while the 50 mrem thyroid CDE was established in consideration of the 1:5 ratio of the EPA PAG for TEDE and thyroid CDE.

Classification based on effluent monitor readings assumes that a release path to the environment is established. If the associated release path to the environment has been isolated, the effluent monitor reading is no longer VALID for emergency classification purposes.

ECL Assignment Attributes: 3.1.2.C

Developer Notes:

The effluent EALs are included to provide a basis for classifying events that cannot be readily classified on the basis of plant conditions alone. The inclusion of both types of EALs more fully addresses the spectrum of possible events and accidents.

The EPA PAGs are expressed in terms of the sum of the effective dose equivalent (EDE) and the committed effective dose equivalent (CEDE), or as the thyroid committed dose equivalent (CDE). For the purpose of these IC/EALs, the dose quantity total effective dose equivalent (TEDE), as defined in 10 CFR § 20, is used in lieu of "…sum of EDE and CEDE.…".

The EPA PAG guidance provides for the use adult thyroid dose conversion factors; however, some states have decided to base protective actions on child thyroid CDE. Nuclear power plant ICs/EALs need to be consistent with the protective action methodologies employed by the States within their EPZs. The thyroid CDE dose used in the IC and EALs should be adjusted as necessary to align with State protective action decision-making criteria.

The "site-specific monitor list and threshold values" should be determined with consideration of the following:

- Include the effluent monitors described in emergency plan and emergency dose assessment procedures.
- The effluent monitor readings should correspond to a dose of 10 mrem TEDE or 50 mrem thyroid CDE at the "site-specific dose receptor point" (as discussed below).
- Monitor readings will be calculated using a set of assumed meteorological data or atmospheric dispersion factors; the data or factors selected for use should be the same as those employed to calculate the monitor readings for IC PD-AU1.
- The calculation of monitor readings will also require use of an assumed release isotopic mix; the selected mix should be the same as that employed to calculate monitor readings for IC PD-AU1.
- The major isotope of concern in the permanently defueled condition is Kr-85.

The "site-specific dose receptor point" is the distance(s) and/or locations used by the licensee to distinguish between on-site and offsite doses. The selected distance(s) and/or locations should reflect the content of the emergency plan, and the procedural methodology used to determine offsite doses and Protective Action Recommendations. This is typically the boundary of the OWNER CONTROLLED AREA; however, some sites may use a different boundary criterion (e.g., the Restricted Area Boundary).

It is recognized that some effluent radiation monitors may be off-scale high during the condition described by this IC. In those cases, EAL values should be determined with a margin sufficient to ensure that accurate monitor reading is available. For example, an EAL monitor reading might be set at 90% to 95% of the highest accurate monitor reading.

Although the IC references TEDE, field survey results are generally available only as a "whole body" dose rate. For this reason, the field survey EAL specifies a "closed window" survey reading.

Indications from a real-time dose projection system are not included in the generic EALs. Many licensees do not have this capability. For those that do, the capability may not be within the scope of the plant Technical Specifications. A licensee may request to include an EAL using real-time dose projection system results; approval may be granted on a case-by-case basis.

Indications from a perimeter monitoring system are not included in the generic EALs. Many licensees do not have this capability. For those that do, these monitors may not be controlled and maintained to the same level as plant equipment, or within the scope of the plant Technical Specifications. In addition, readings may be influenced by environmental or other factors. A licensee may request to include an EAL using a perimeter monitoring system; approval may be granted on a case-by-case basis.

PD-AA2

Initiating Condition - ALERT

UNPLANNED rise in plant radiation levels that impedes plant access required to maintain spent fuel integrity.

Operating Mode Applicability: Not Applicable

Example Emergency Action Levels:

(1) UNPLANNED dose rate greater than 15 mR/hr in **ANY** of the following areas requiring continuous occupancy to maintain control of radioactive material or operation of systems needed to maintain spent fuel integrity:

(site-specific area list)

(2) UNPLANNED Area Radiation Monitor readings or survey results indicate a rise by 100 mR/hr over NORMAL LEVELS that impedes access to **ANY** of the following areas needed to maintain control of radioactive material or operation of systems needed to maintain spent fuel integrity.

(site-specific area list)

Basis:

This IC addresses increased radiation levels that impede necessary access to areas containing equipment that must be operated manually or that requires local monitoring, in order to maintain systems needed to maintain spent fuel integrity. As used here, 'impede' includes hindering or interfering, provided that the interference or delay is sufficient to significantly threaten necessary plant access. It is this impaired access that results in the actual or potential substantial degradation of the level of safety of the plant.

This IC does not apply to anticipated temporary increases due to planned events.

ECL Assignment Attributes: 3.1.2.C

Developer Notes:

The value of 15mR/hr is derived from the GDC 19 value of 5 rem in 30 days with adjustment for expected occupancy times. Although Section III.D.3 of NUREG-0737, *Clarification of TMI Action Plan Requirements*, provides that the 15 mR/hr value can be averaged over the 30 days, the value is used here without averaging, as a 30 day duration implies an event potentially more significant than an Alert.

The specified value of 100 mR/hr is arbitrary and may be set to another value for a specific application with appropriate justification.

PD-HA1

Initiating Condition - ALERT

HOSTILE ACTION within the OWNER CONTROLLED AREA or airborne attack threat within 30 minutes.

Operating Mode Applicability: Not Applicable

Example Emergency Action Levels:

(1) A HOSTILE ACTION is occurring or has occurred within the OWNER CONTROLLED AREA as reported by the (site-specific security shift supervision).

(2) A validated notification from NRC of an aircraft attack threat within 30 minutes of the site.

Basis:

This IC addresses the potential for 1) a very rapid progression of events due to a HOSTILE ACTION within the OWNER CONTROLLED AREA (i.e., the event could quickly progress to an attack on the PROTECTED AREA), or 2) wide-area damage from an aircraft impact. Either event will require rapid assistance due to the possibility for significant and/or indeterminate damage to equipment, and casualties among the plant staff.

Timely and accurate communications between Security Shift Supervision and the Control Room is essential for proper classification of a security-related event.

Security plans and terminology are based on the guidance provided by NEI 03-12, *Template for the Security Plan, Training and Qualification Plan, Safeguards Contingency Plan [and Independent Spent Fuel Storage Installation Security Program]*.

As time and conditions allow, these events require a heightened state of readiness by the plant staff and implementation of onsite protective measures (e.g., evacuation, dispersal or sheltering). The Alert declaration will also heighten the awareness of Offsite Response Organizations, allowing them to be better prepared should it be necessary to consider further actions.

This IC does not apply to incidents that are accidental events, acts of civil disobedience, or otherwise are not a HOSTILE ACTION perpetrated by a HOSTILE FORCE. Examples include the crash of a small aircraft, shots from hunters, physical disputes between employees within the PROTECTED AREA, etc. Reporting of these types of events is adequately addressed by other EALs, or the requirements of 10 CFR § 73.71 or 10 CFR § 50.72.

EAL #1 is applicable for any HOSTILE ACTION occurring, or that has occurred, in the OWNER CONTROLLED AREA. This includes any action directed against an ISFSI that is located within the OWNER CONTROLLED AREA.

EAL #2 addresses the threat from the impact of an aircraft on the plant, and the anticipated arrival time is within 30 minutes. The intent of this EAL is to ensure that threat-related notifications are made in a timely manner so that plant personnel and OROs are in a heightened

state of readiness. This EAL is met when the threat-related information has been validated in accordance with (site-specific procedure).

The NRC Headquarters Operations Officer (HOO) will communicate to the licensee if the threat involves an aircraft. The status and size of the plane may be provided by NORAD through the NRC.

In some cases, it may not be readily apparent if an aircraft impact within the OWNER CONTROLLED AREA was intentional (i.e., a HOSTILE ACTION). It is expected, although not certain, that notification by an appropriate Federal agency to the site would clarify this point. In this case, the appropriate federal agency is intended to be NORAD, FBI, FAA or NRC. The emergency declaration, including one based on other ICs/EALs, should not be unduly delayed while awaiting notification by a Federal agency.

EALs should not incorporate Security-sensitive information. This includes information that may be advantageous to a potential adversary, such as the particulars concerning a specific threat or threat location.

ECL Assignment Attributes: 3.1.2.D

Developer Notes:

The (site-specific security shift supervision) is the title of the on-shift individual responsible for supervision of the on-shift security force.

EALs should not incorporate Security-sensitive information. This includes information that may be advantageous to a potential adversary, such as the particulars concerning a specific threat or threat location.

PD-HA3

Initiating Condition - ALERT

Other conditions exist which in the judgment of the Emergency Director warrant declaration of an Alert.

Operating Mode Applicability: Not Applicable

Example Emergency Action Levels:

(1) Other conditions exist which in the judgment of the Emergency Director indicate that events are in progress or have occurred which involve an actual or potential substantial degradation of the level of safety of the plant or a security event that involves probable life threatening risk to site personnel or damage to site equipment because of HOSTILE ACTION. Any releases are expected to be limited to small fractions of the EPA Protective Action Guideline exposure levels.

Basis:

This EAL addresses unanticipated conditions not addressed explicitly elsewhere but that warrant declaration of an emergency because conditions exist which are believed by the Emergency Director to fall under the emergency classification level description for an Alert.