Safety I&C Systems

- Topical Report
- Applicable Codes and Regulations
- Safety I&C System Description
  - ✓ Overview
  - ✓ PPS
  - ✓ ESF-CCS
  - ✓ CPCS
  - ✓ QIAS-P
  - ✓ Data Communication
- Software Development and V&V
- Equipment Reliability
- Design Acceptance Criteria
- Summary

1 Topical Report

Topical Report (1/1)

Table of Contents

2 Applicable Codes and Regulations

Applicable Codes And Regulations (1/8)

10 CFR Part 50 Appendix A, General Design Criteria

- GDC 1, "Quality Standards and Records"
  - Conforms to the requirements of 10 CFR 50, Appendix B, "Quality Assurance Criteria for Nuclear Power Plants"
- GDC 2, "Design Bases for Protection against Natural Phenomena"
  - Designed as Seismic Category I
  - Installed in the I&C equipment rooms or MCR that provide protection against other natural phenomena
- GDC 10, "Reactor Design"
  - Contributes to reactor design margin by providing conservatism in setpoint calculations and fault-tolerant features
  - Uncertainties and setpoint methodology will be submitted as a separate technical report

Applicable Codes And Regulations (2/8)

10 CFR Part 50 Appendix A, General Design Criteria

- GDC 19, "Control Room"
  - Equipped with manual reactor trip initiation switches and manual ESFAS initiation switches in the MCR safety console
  - Implemented with the displays for safe operation in the MCR.
- GDC 21, "Protection System Reliability and Testability"
  - Maintains the protection function in case of any single credible failure
  - Allows periodic testing without reducing the availability of the protection systems using bypass function

Applicable Codes And Regulations (3/8)

10 CFR Part 50 Appendix A, General Design Criteria

- GDC 22, "Protection System Independence"
  - Consists of four independent measurement channels for each protective parameter
- GDC 23, "Protection System Failure Modes"
  - Designed to fail into a safe state
  - FMEA method will be described in the Topical Report
- GDC 24, "Separation of Protection and Control System"
  - Maintains physical separation from non-safety system

Applicable Codes And Regulations (4/8)

Regulatory Guide

- Regulatory Guide 1.22, "Periodic Testing of Protection System Actuation Functions"
  - Provides complete overlap testing during the reactor operating at power or when shutdown
- Regulatory Guide 1.47, "Bypassed and Inoperable Status Indication for Nuclear Power Plant Safety Systems"
  - Provides system level alarms when a component is bypassed or inoperable
- Regulatory Guide 1.53, "Application of the Single Failure Criterion to Nuclear Power Plant Protection Systems"
  - Assures both the reactor safety and resistance to a spurious reactor trip with four channel configuration

Applicable Codes And Regulations (5/8)

Regulatory Guide

- Regulatory Guide 1.62, "Manual Initiation of Protection Action"
  - Provides manual initiation of a protective action at the system level for RPS and ESFAS
  - Provides manual switches on the MCR safety console
- Regulatory Guide 1.75, "Criteria for Independence of Electrical Safety Systems"
  - Located in different geographic fire zones for each channel
  - Electrically isolated using fiber-optic technology
  - Physically separated
- Regulatory Guide 1.97, "Criteria for Accident Monitoring Instrumentation for Nuclear Power Plants"
  - Provides the accident monitoring instrumentation according to IEEE Std. 497-2002

Applicable Codes And Regulations (6/8)

Regulatory Guide

- Regulatory Guide 1.105, "Setpoints for Safety-Related Instrumentation"
  - Setpoint methodology conforms to ISA-S67.04-1994
  - Uncertainties and setpoint methodology will be submitted as a separate technical report
- Regulatory Guide 1.118, "Periodic Testing of Electric Power and Protection Systems"
  - Designed to be periodically tested in accordance with the criteria of IEEE Std. 338-1987
  - Provides overlapped testing for the RPS and ESFAS without initiating a reactor trip or ESF actuation
- Regulatory Guide 1.152, "Criteria for Digital Computers in Safety Systems of Nuclear Power Plants"
  - Conforms to IEEE Std. 7-4.3.2-2003

Applicable Codes And Regulations (7/8)

Regulatory Guide

- Regulatory Guide 1.168, “Verification, Validation, Reviews and Audits for Digital Computer Software used in Safety Systems of NPP
  - Conforms to IEEE Std. 1012-1998 and IEEE Std. 1028-1997
- Regulatory Guide 1.169, “Configuration Management Plans for Digital Computer Software used in Safety Systems on NPP
  - Conforms to IEEE Std. 828-1990 and IEEE Std. 1042-1997
- Regulatory Guide 1.170, “Software Test Documentation for Digital Computer Software used in Safety Systems of NPP
  - Conforms to IEEE Std. 829-1983
- Regulatory Guide 1.171, “Software Unit Testing for Digital Computer Software used in Safety Systems of NPP
  - Conforms to IEEE Std. 1008-1987
- Regulatory Guide 1.172, “Software Requirements Specifications for Digital Computer Software used in Safety Systems of NPP
  - Conforms to IEEE Std. 830-1993

Applicable Codes And Regulations (8/8)

Regulatory Guide

- Regulatory Guide 1.173, “Developing Software Life Cycle Processes for Digital Computer Software used in Safety Systems
  - Conforms to IEEE Std. 1074-1995
- Regulatory Guide 1.180, “Guidelines for Evaluating Electromagnetic and Radio Frequency Interference in Safety Related I&C”
  - Qualified according to the EMI/RFI requirements of MIL Std. 461E
- Regulatory Guide 1.209, “Guidelines for Environmental Qualification of Safety Related I&C in Nuclear Power Plants”
  - Qualified according to the requirements of IEEE Std. 323-2003

3 Safety I&C System Description

Overview (1/6)

Overall I&C System Architecture

- Safety I&C system uses qualified PLC platform
- Non-safety I&C system uses DCS platform
- Provides 4 channel redundancy for safety I&C system except QIAS-P
  - Installed in physically separated I&C equipment rooms
- Electrical isolation, physical separation and communication independence
  - Between redundant safety channels
  - Between safety system and non-safety system
- Diversity to cope with the CCF of digital safety I&C system
  - Diverse Protection System
  - Diverse Indication System
  - Diverse Manual ESF Actuation Switches

Overview (2/6)

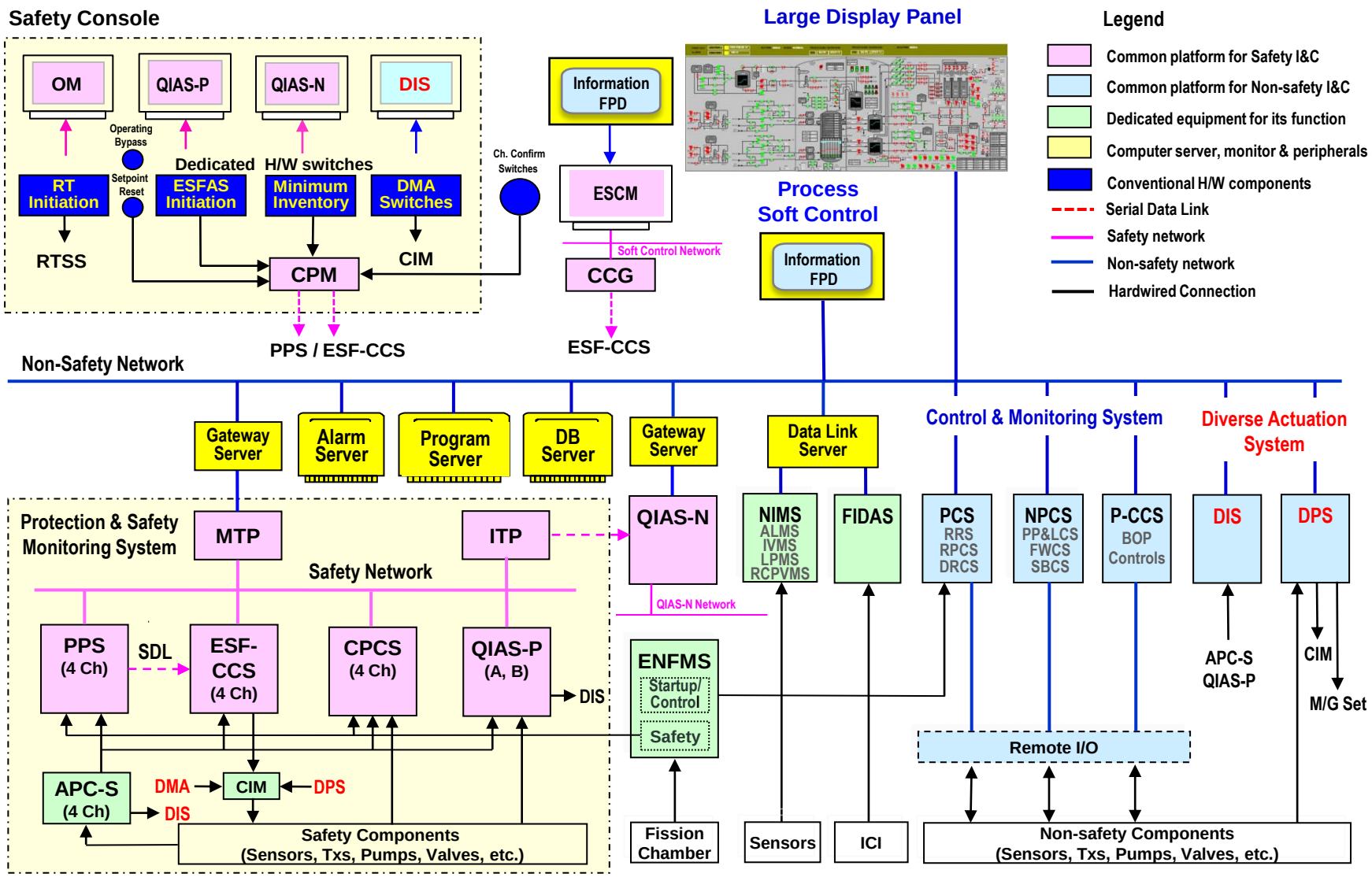

APC-S : Auxiliary Process Cabinet – Safety, CIM : Component Interface Module, CPCS : Core Protection Calculator System, DIS : Diverse Indication System, DMA : Diverse Manual ESF Actuation, DPS : Diverse Protection System, ENFMS : Ex-core Neutron Flux Monitoring System, ESCM : ESF-CCS Soft Control Module FIDAS : Fixed In-core Detector Amplifier System, ICI : In-Core Instrumentation , NIMS : NSSS Integrity Monitoring System, NPCS : NSSS Process Control System, OM : Operator Module, P-CCS : Process Component Control System, PCS : Power Control System, QIAS-P/N : Qualified Indication & Alarm System - PAMI / Non-safety

Overview (3/6)

Protection and Safety Monitoring System

- Plant Protection System
  - Initiates reactor trip or ESFAS whenever the monitored process values exceed the pre-defined limits
- Engineered Safety Features-Component Control System
  - Controls the operation of ESF components
  - Receives manual ESFAS actuation signals from safety console
- Core Protection Calculator System
  - Computes DNBR and LPD
  - Provides the trip signal to PPS
- Qualified Indication and Alarm System – PAMI
  - Displays Type A, B & C variables required by Reg. Guide 1.97 and the variables for inadequate core cooling monitoring
- Auxiliary Process Cabinet – Safety
  - Receives safety field signals and distributes them to PPS, ESF-CCS, CPCS, QIAS-P and DIS

Overview (4/6)

Control and Monitoring System

- Power Control System
  - Controls reactor power level
  - Includes Reactor Regulating System, Reactor Power Cutback System and Digital Rod Control System
- NSSS Process Control System
  - Controls NSSS processes
  - Consists of Pressurizer Pressure & Level Control System, Feedwater Control System and Steam Bypass Control System
- Process-Component Control System
  - Controls BOP processes
- Qualified Indication and Alarm System – Non-safety
  - Supports continuous plant operation when Information Processing System is unavailable
  - Provides the indications required for EOP execution, safe shutdown and critical operator action required by PRA and HRA

Overview (5/6)

Diverse Actuation System

- Diverse Protection System
  - Provides defense against CCF of PPS/ESF-CCS (SECY 93-087, BTP 7-19)
  - Reduces the risk of ATWS (10 CFR 50.62)
- Diverse Indication System
  - Displays Position 4 variables (SECY 93-087, BTP 7-19)
- Diverse Manual ESF Actuation Switches
  - Provide Position 4 actuation (SECY 93-087, BTP 7-19)

Overview (6/6)

Human – System Interface

- Large Display Panel
  - Display of overall plant operation
- Operator Consoles
  - Monitor and control all processes
- Safety Console
  - Backup operation during total failure of the operator consoles;
  - EOPs operation and safe shutdown
  - Critical operator actions required by PRA and HRA
  - Manual ESF system level actuation switches and reactor trip switches
  - Alarms, displays, controls needed to perform periodic surveillance test

Plant Protection System (1/5)

Design Features

- Qualified PLC platform
- Reactor Trip & ESFAS initiation function
  - Mitigates the consequences of safety related design bases events
- Four independent channels
- Redundancy within each channel to enhance availability
- Fail-safe design for component failure or loss of electrical power
- Continuous automatic on-line testing
  - Hardware self diagnostics
  - Cross channel comparisons
- Manual testing
  - Computer-aided surveillance testing

Plant Protection System (2/5)

System Description

- Bistable Processor
  - Generates trip signals when the process value exceeds a setpoint
- Local Coincidence Logic Processor
  - Determines the trip state based on the state of the four channel bistable trip inputs and respective bypasses
  - Generates the initiation signal for RTSS or ESF-CCS
- Maintenance & Test Panel
  - Shared with ESF-CCS, CPCS and QIAS-P
  - Provides manual control functions using soft control with Function Enable Key switches to meet DI&C-ISG-04
  - Displays system operating status

Plant Protection System (3/5)

System Description

- Interface & Test Processor
  - Transfers the safety system operating status to IPS and QIAS-N
  - Supports surveillance test
- Operator Module
  - Shared with ESF-CCS and CPCS
  - Located on the Safety Console
  - Provides PPS control functions using conventional switches on the Safety Console
    - operating bypass, variable setpoint reset
  - Displays system operating status
- RPS Reactor Trip Initiation Switches
  - 4 switches in the MCR Safety Console
  - Hardwired directly to the RTSS

Plant Protection System (4/5)

System Configuration

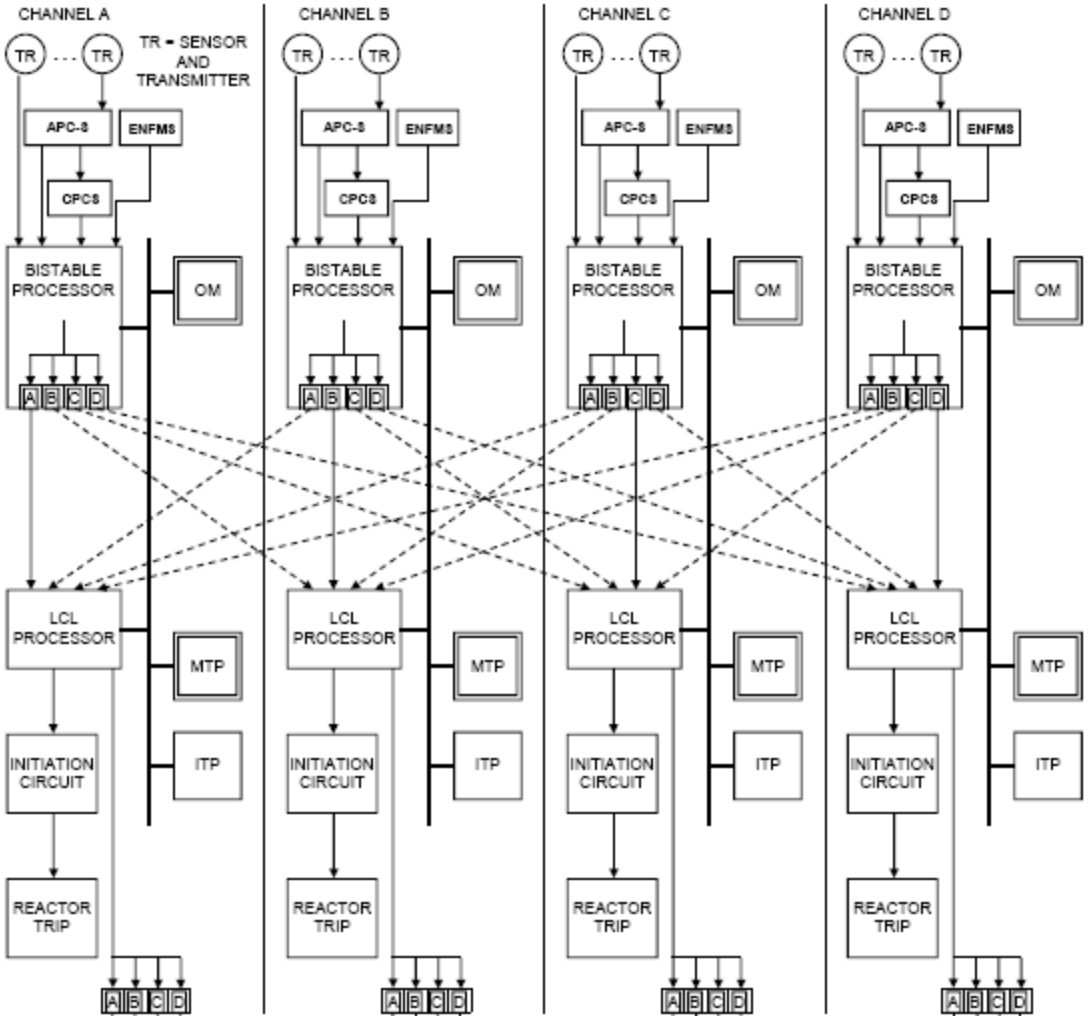

Plant Protection System (5/5)

Testing Function

- Self-testing
  - Continuous and automatic diagnostics for detecting hardware and software error
  - Cross channel comparison for channel operability check
- Manual testing
  - Performs under administrative control
  - Complete overlapped testing

ESF-CCS (1/3)

Design Features

- Common platform with PPS
- Consists of 4 channels
- Consists of Group Controller and Loop Controller
- Group Controller
  - Performs 2/4 logic using the ESFAS initiation signals from PPS
  - Performs load sequence logic for emergency diesel generator
- Loop Controller
  - Performs the component control logic

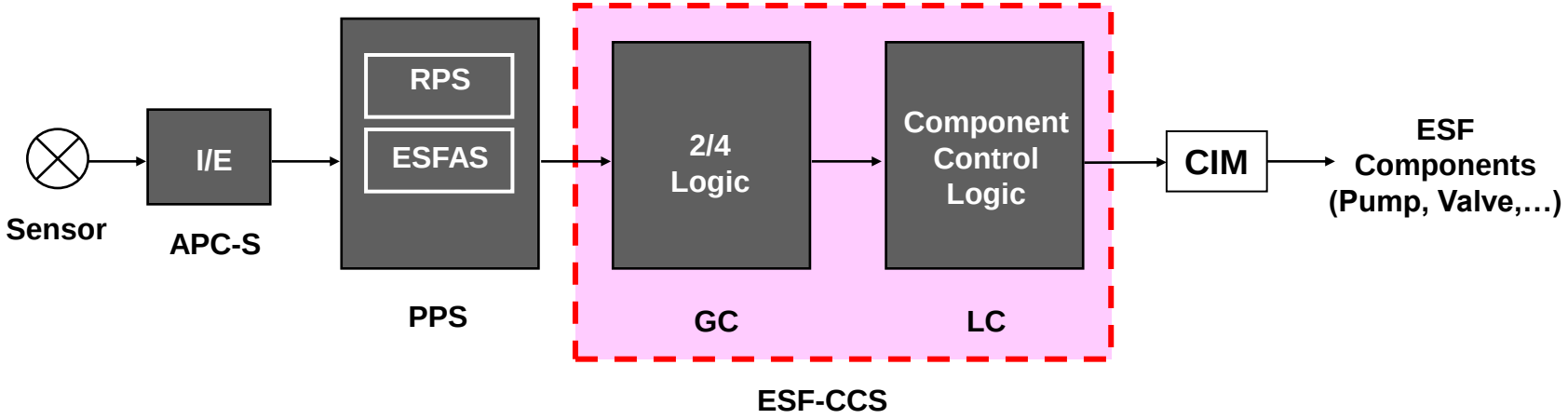

ESF-CCS (2/3)

System Description (CIM)

- Main Function
  - Integrates component command signals from different control platforms
  - Arbitrates component command and prioritize control by system-based and state-based priority.

- Hardware-based safety grade module
  - Diverse from safety platform (PPS & ESF-CCS)
  - Permanent logic implemented by solid-state device technology
  - Fully testable design
  - Seismic Category I
  - EMI/RFI qualification

ESF-CCS (3/3)

System Description (CIM)

- Priority Logic
  - Hardware-based logic
  - State-based priority (safe state first)

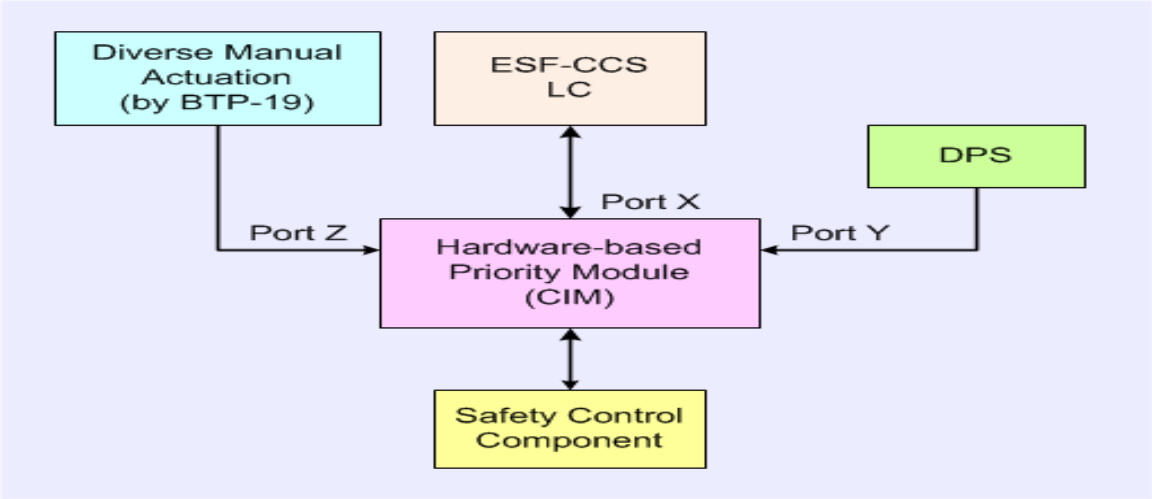

CPCS (1/3)

System Description

- Common platform with PPS
- Four independent channels
- Generates the low DNBR trip and high LPD trip to PPS
- Provides CEA Withdrawal Prohibit signals to the Digital Rod Control System
- Transmits all the CEA positions to the Information Processing System

CPCS (2/3)

System Description

- CPCS consists of CPC, CEAC and CPP
- Core Protection Calculator
  - Calculates Departure from Nucleate Boiling Ratio and Local Power Density based on CEA position and penalty factor
  - Generates Low DNBR / High LPD trip and CWP to PPS
- Control Element Assembly Calculator
  - Monitors CEA positions
  - Calculates CEA position penalty factor
- CEA Position Processor
  - Performs A/D conversion for the signals from the Reed Switch Position Transmitters
  - Transmit the CEA positions to CEAC

CPCS (3/3)

System Description (Function)

- Receives the following signals from the process sensors, RSPT and ENFMS
  - RCS cold leg and hot let temperature
  - Pressurizer pressure
  - Reactor coolant pump speed
  - Ex-core neutron flux power
  - CEA positions
- Calculates DNBR and LPD values
- Compares the calculated DNBR and LPD values to setpoints
- Provides the output to PPS
  - Low DNBR trip, pre-trip
  - High LPD trip, pre-trip
  - CEA Withdrawal Prohibit

QIAS-P(1/2)

System Description

- Common platform with PPS
- Two channel redundancy (Ch. A & B)
- Provides two separate FPDs (continuous and dedicated) at the Safety Console
- Displays accident monitoring instrumentation variables
  - Type A, B and C parameters required by Reg. Guide 1.97 Rev.04
- Displays inadequate core cooling variables (NUREG-0737, Sec.II.F.2)
  - Primary coolant saturation margin
  - Rx vessel level (HJTC)
  - Core exit temperature

QIAS-P (2/2)

QIAS-P Architecture

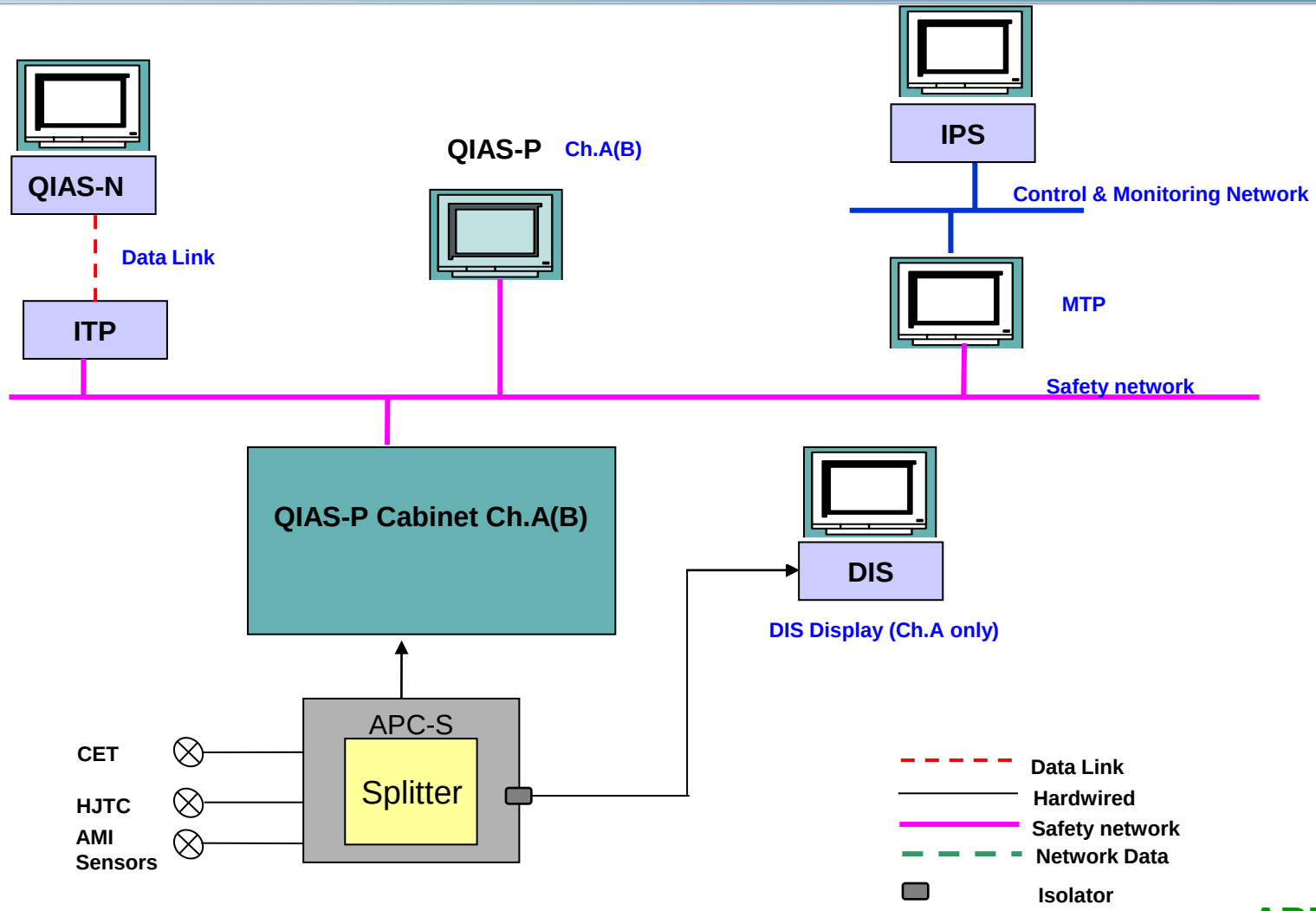

Data Communication (1/6)

Data Communication Independence

- Data communication meets the requirements of R.G. 1.75 and DI&C-ISG-04
  - Physical separation: distance between redundant channels
  - Electrical isolation: fiber optic technology
  - Communication independence: broadcast only
- The serial data link transmission is used for transmitting safety signals
  - No acknowledgement from the other side
- The communication and processing section processors share data by means of dual-ported memory
  - Interface via dual-ported memory separate functionally between processing processor and communication processor

Data Communication (2/6)

Data Communication Network

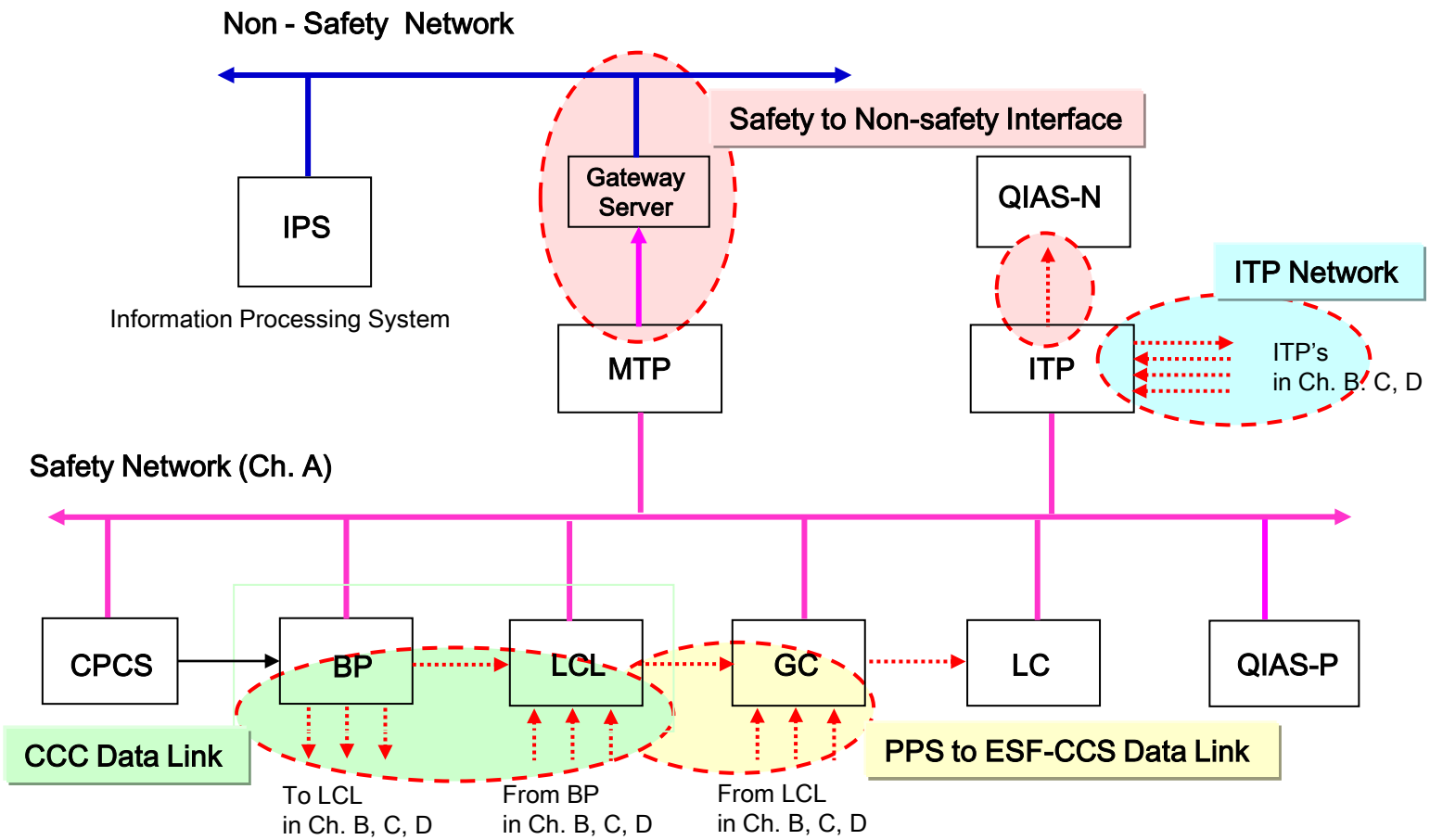

CCC : Cross Channel Communication

Data Communication (3/6)

Data Communication between Redundant Safety Channels

- Between PPS channels
- Between CPCS channels
- Between PPS and ESF-CCS channels
- Between ITPs in each channel

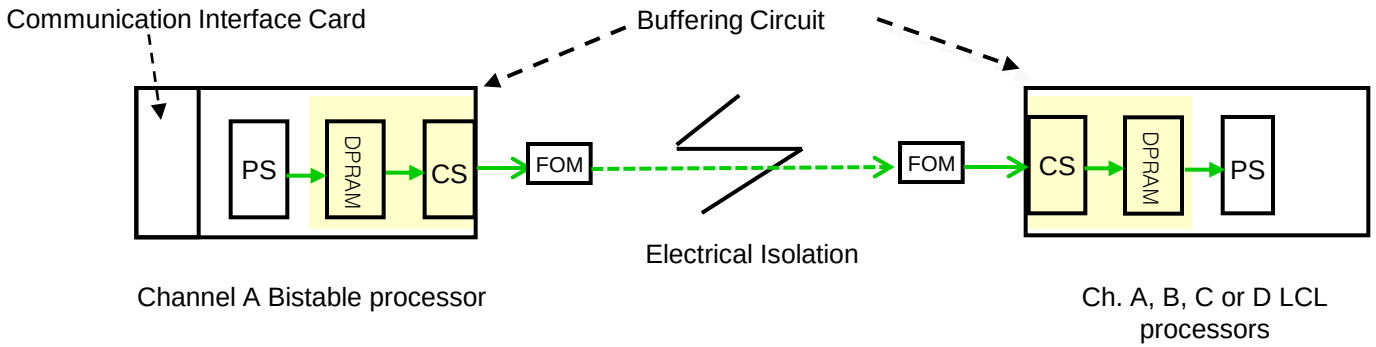

Serial data link between Bistable processor and LCL processor for example

PS : Processing Section
CS : Communication Section

Data Communication (4/6)

Data Communication from Safety to Non-safety system

- Between ITPs in each channel and QIAS-N

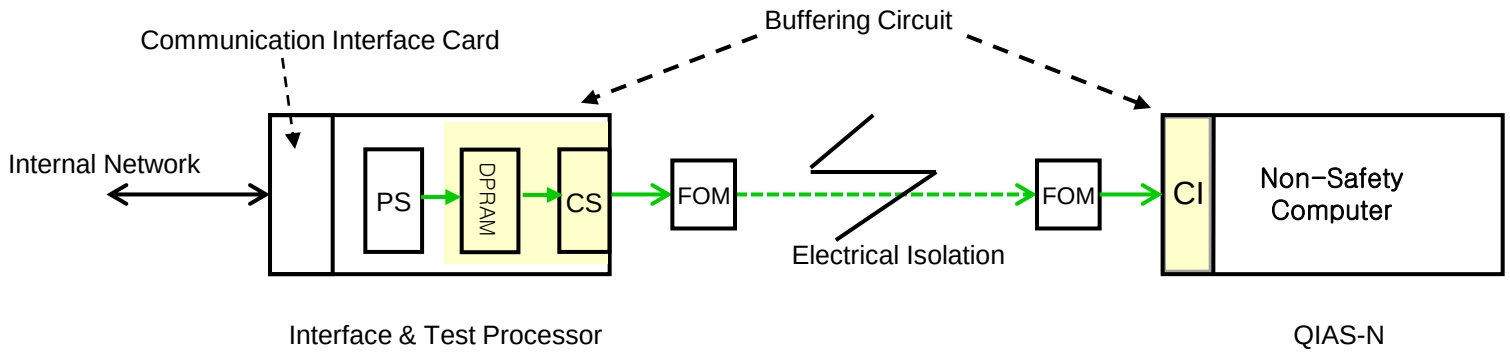

- Between MTPs in each channel and Gateway Servers

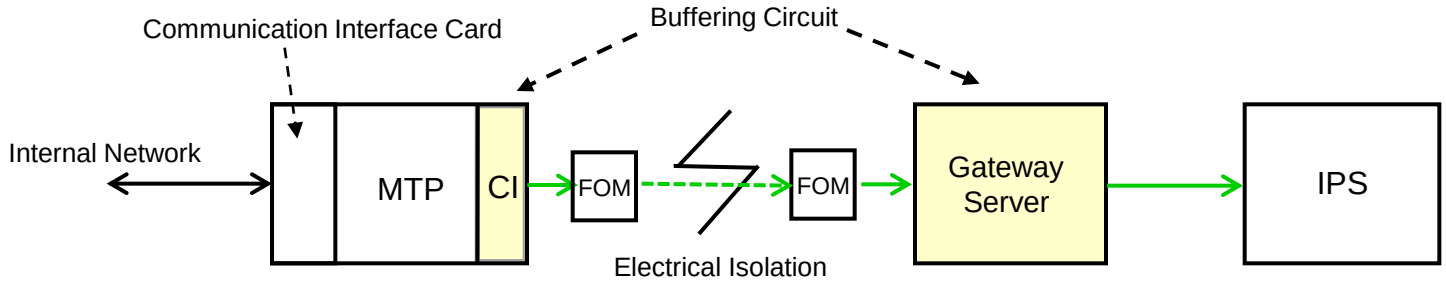

Data Communication (5/6)

Soft Control Communication

- Replaces the conventional dedicated pushbuttons and M/A station.
- Enable operators to control all ESF components using the ESF-CCS Soft Control Module (ESCM)
- Safety related soft control
  - Selects ESF component to be controlled on the Information FPD
  - Information FPD sends component ID to ESCM
  - Controls the selected ESF component using the component control template the ESCM
  - ESCM control signals are transmitted to the ESF-CCS via Control Channel Gateway (CCG)
  - The control signals are validated by channel confirm switches.

Data Communication (6/6)

Soft Control Communication

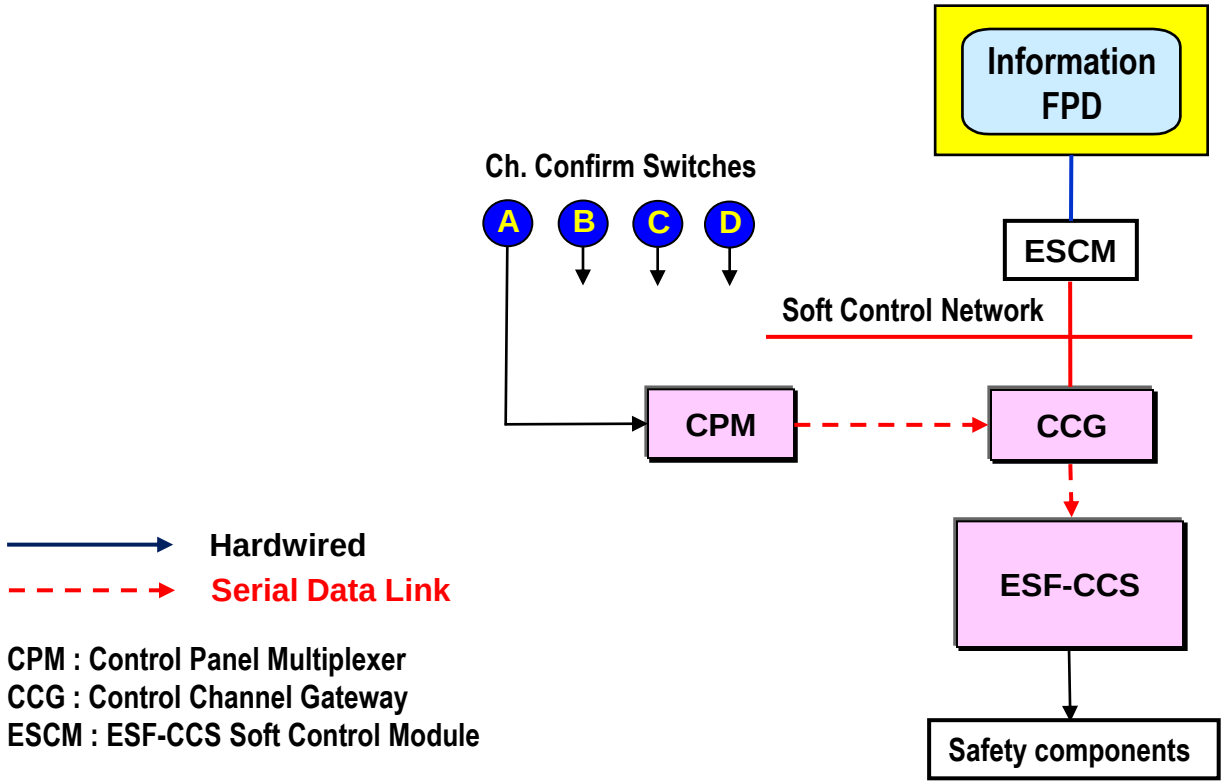

CPM : Control Panel Multiplexer
CCG : Control Channel Gateway
ESCM : ESF-CCS Soft Control Module

4 Software Development and V&V

Software Development and V&V (1/2)

Software Reliability

- Software design life cycle
  - Software life cycle model consistent with IEEE Std. 1074
  - Software life cycle activities consistent with NUREG 0800, BTP 7-14
  - Major software plan documents
    - software quality assurance plan – IEEE Std. 730
    - software V&V plan – IEEE Std. 1012
    - software configuration management plan – IEEE Std. 828
    - software safety plan – IEEE Std. 1228
- Software classification
  - Classified according to the grade of importance (its function to be performed)
  - Software within a processor have the same classification
  - Most rigorous V&V requirements are applied to protection grade S/W

Software Development and V&V (2/2)

Software Classification

IEEE 1012-1998 Criticality	APR1400 Software Classification	
High (Level 4)	Protection (Safety Critical)	- perform RPS control actions - perform ESFAS control actions - perform safe shutdown control actions
Major (Level 3)	Important to Safety (ITS)	- monitor or test protection functions - monitor plant critical safety functions - provide supplemental means to perform protection functions
Moderate (Level 2)	Important to Availability (ITA)	- maintain operation of plant systems and equipment that are necessary to operate the plant
Low (Level 1)	General Purpose	- perform functions other than that described in the previous classifications - not installed in the on-line plant system.

5 Equipment Reliability

Equipment Reliability (1/3)

Types of Equipment Qualification

- Environmental Qualification
  - Located in mild environments where qualified HVAC is provided
  - IEEE std. 323-2003, as endorsed by RG 1.208
- Seismic Qualification
  - Classified in Seismic category I
  - IEEE std. 343-1987, as endorsed by RG 1.100
  - To be qualified by test, analysis or a combination of both methods
- Electromagnetic Compatibility (EMC)
  - Qualified for EMI/RFI emission / susceptibility and SWC
  - MIL. std. 461E and IEC std. 61000 series, as endorsed by RG 1.180

Equipment Reliability (2/3)

Reliability Analysis (FMEA)

- Potential single failure analysis for hardware components
- Assumes that one of the redundant PPS bistable trip channels is bypassed for maintenance
- Analysis to the level of replaceable modules
- FMEA table includes
  - Component and number
  - Failure mode
  - Symptom and local effect
  - Effect on protective function
  - Method of detection
  - Fault classification

Equipment Reliability (3/3)

Reliability Analysis (Unavailability)

- Probabilistic analysis using fault tree model
  - PPS fails to trip the reactor on demand
  - ESF-CCS fails to actuate the ESF components on demand
- Analysis considers
  - Independent component hardware failures
  - Common cause component hardware failures
  - Unavailability due to trip parameter in bypass
  - Human (operator) errors
- Major components for impacting system reliability
  - Reactor trip : CCF of RTSS, CCF of LCL DO module
  - ESFAS : CCF of Component Interface Module

6 Design Acceptance Criteria

Design Acceptance Criteria

Digital Platform and Safety I&C System

System	Design Area	DC Phase
Digital Platform for Safety System	Hardware Component Detail Design - Response Time - Uncertainty - Deterministic Performance - System Diagnostics	
	Data Communication Independence	
	Equipment Qualification	
	Commercial Grade Dedication	DAC
Safety System - RPS - ESF-CCS - CPCS - QIAS-P - Data Comm.	System Description	Detail Design
	Design Bases	Detail Design
	Functional Design	Detail Design
	Software	DAC
	Set-point Calculations	
	Reliability Analysis	

7 SUMMARY

Summary

- APR1400 I&C system overview provides the information for:
  - Common PLC for safety I&C and DCS for Non-safety I&C
  - Design feature and system description of PPS, ESF-CCS, CPCS, QIAS-P and data communications
  - S/W design process
  - Safety I&C reliability
- I&C system licensing plan
  - DAC is used for safety system digital platform and software
  - Component design details will be provided for reference
- Safety I&C systems topical report will be submitted