Non-SNFT Issues & Challenges

Presented by Kate Roughan
at USNRC Meeting November 2011

Background

- Have built and distributed more than 25,000 Type B(U) packages to date, build more than 500 packages a year – "Production Type B"

- Excellent safety record - No failures of Type B package for more than 30 years

10/25/2011

Packages

- Small robust packages for industrial radiography
  - Serves as both exposure device and shipping container
  - Used and shipped domestically and internationally
  - 150 Ci Ir-192 Special form source
  - 50 pounds with depleted uranium shield - 16" x 8"

10/25/2011

Packages

- Source Changers
  - 240-1000 Ci Ir-192
  - Shipped daily

- Bulk Iridium package
  - 15,000 Ci Ir-192
  - 400 pounds

10/25/2011

Packages

- 110 and 330 Ci Co-60 device
- Stainless steel, welded construction
- 1 year licensing after completion of design, build and testing

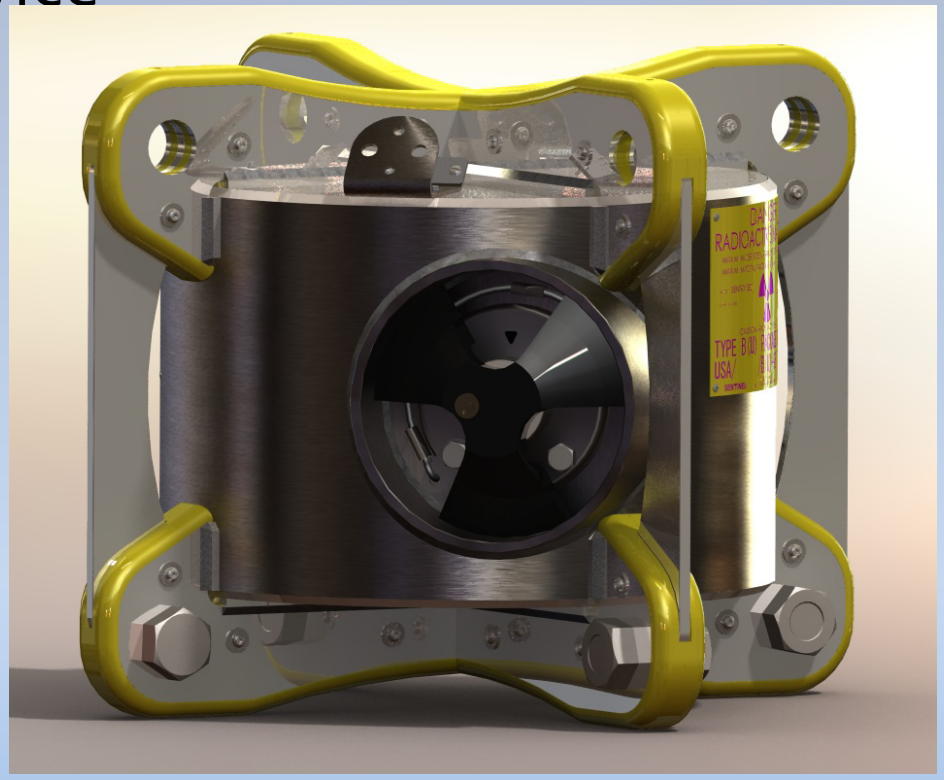

10/25/2011

Generic Regulatory Issues

Consistency & Predictability of Reviews

Differences in expected information varies from submission to submission based on reviewers involved.

Resultant Issues:

- Unable to provide all information necessary for review at time of submission.

- - - Its Like Trying to Hit a Moving Target - - -

A lack of consistent, known expectations:

- Creates deficiency letters that could otherwise be avoided.
- Increases review time per submission.
- Makes it difficult to budget for submission costs to support the Regulatory Compliance Program.

Generic Regulatory Issues

QSA GLOBAL

Further for Consistency…

Since most of industry makes domestic and international shipments, NRC should continue to support consistency with IAEA regulation changes.

Generic Regulatory Issues

QSA GLOBAL

Scope of Reviews

Often, small, specific amendment submissions are opened up by reviewers who raise questions about information currently approved under the SAR that is not affected by the amendment.

Resultant Issues:

Applicants avoid Certificates amendments whenever possible, including package improvements, because amendments run the risk of requiring:

- Additional testing and staff resources to support compliance assessments in areas previously accepted and not affected by the requested change.
- Increases review time and costs per submission when amendments cannot be avoided.

Generic Regulatory Issues

QSA GLOBAL

Scope of Reviews

Often, small, specific amendment submissions are opened up by reviewers who raise questions about information currently approved under the SAR that is not affected by the amendment.

Unless a significant safety Issue is Identified that would otherwise require issuance of an Order by NRC to correct prior further transport, it is suggested that unrelated issues & questions identified during amendment reviews should be noted in the NRC file and held for review/resolution until the next full renewal of the certificate.

Generic Regulatory Issues

QSA GLOBAL

Further…

We support the idea that minor changes to the package do not need amendment, as long as an internal assessment is done that shows no impact on the Type B package integrity. Assessments would be performed under the USNRC approved Quality Assurance Program and minor changes could be integrated into the 5 year certificate renewals.

<u>Examples of Minor Changes could Include:</u>

- Revisions to Section 7 of the SAR to update Regulatory references due to regulation changes.
- Modifications to components that are Not Important to Safety.

Generic Regulatory Issues

NRC Approved QA Programs

It does not appear that the existing NRC Approved QA Programs are being recognized/credited during Type B package reviews.

Currently there appears to be dual regulation of some requirements as Type B package manufacturers must address issues under the QA program and then separately for each of their package approvals (e.g., specific details regarding implementation of the QA program currently required under Sections 2 and 8 of the SAR, should be considered as already addressed under the approved QA program manual umbrella).

In some cases, special processes covered under the QA program approval and further supported by physical measurements prior to each package transport (e.g., radiation profiles of the package), are held to very specific wording regarding performance requirements in Section 8 of each individual SAR.

Generic Regulatory Issues

Consistent Guidance on Quality/Safety Classification

The use of different classification systems undermines the foundation of package approval reviews.

Regulatory Guide 7.10, DG-2004 and CR6407 for the Part 71 Quality Assurance program recommend use of a graded approach to quality using Class A, B and C categories.

SAR reviewers currently use the terms ITS and NITS for identifying components important or not to safety.

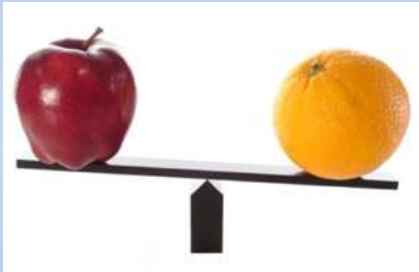

There should be a consistent nomenclature and approach across NRC for identification and classification of safety significance of components so licensees can (1) evaluate components to a single set of criteria and (2) have agreement across the Type B certificate reviews and the NRC QA program required to support Type B package fabrication.

Generic Regulatory Issues

Consideration of Special Form Capsule Status

Type B transport of special form radioactive material should use a different, less stringent set of requirements than are used for spent fuel/normal form contents as the risks associate with transport of special form material are lower.

Generic Regulatory Issues

Certificate Drawing Content/Level of Detail

It appears the original intent of drawings referenced on certificates was to provide additional information to package users when loading/preparing the package for transport. The drawings would then be used along with Sections 7 & 8 of the SAR to prepare the package for transport.

Resultant Issue:

Currently, approval for certificate drawings is pulling in a high level of detail and material specification that goes far and beyond the amount of information that general users of the package need to ensure compliant transport.

Generic Regulatory Issues

Certificate Drawings Continued…

Though the information being added to the drawings may need to be addressed within Sections 1-6 of the SAR, much of the information cannot be changed or affected by a regular package user so its addition to the drawings does not aid in compliant shipments by package users.

For package components that are not replaceable by package users, that information should not be required on the drawings.

Currently our drawings are so complicated and detailed that in some cases they make it harder for a package user to locate the useful information they need to properly prepare the package for transport.

MODEL No.	MAXIMUM TOTAL PACKAGE WEIGHT WITH JACKET	MAXIMUM TOTAL PACKAGE WEIGHT WITHOUT JACKET	MAXIMUM DEPLETED URANIUM SHIELD WEIGHT	MAXIMUM IR192 CAPACITY
880 ELITE	42 LBS.	37 LBS.	25.0 LBS.	50 CURIE
880 DELTA	52 LBS.	46 LBS.	34.4 LBS.	150 CURIE
880 SIGMA	52 LBS.	46 LBS.	34.4 LBS.	130 CURIE

INDICATES CENTER OF GRAVITY (CG).

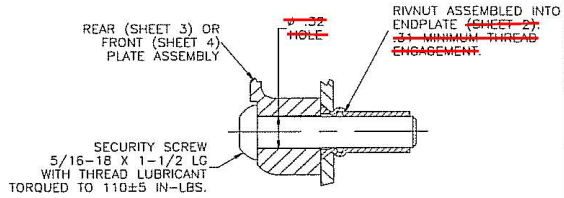

REAR & FRONT PLATE ASSEMBLY ATTACHMENT
8 PLACES

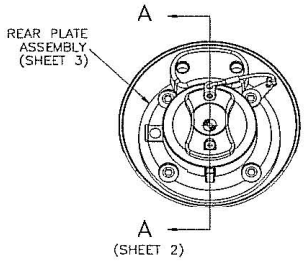

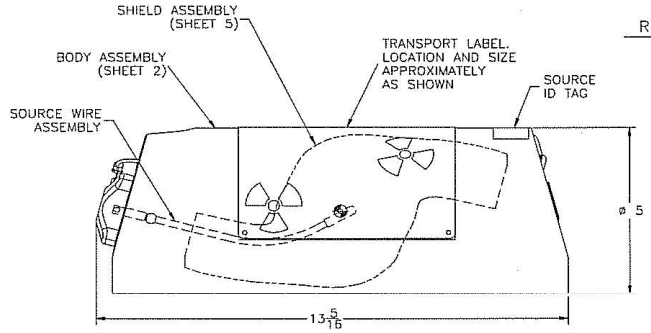

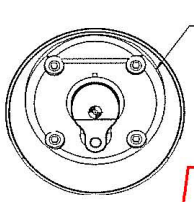

List QSA Part # for removed materials

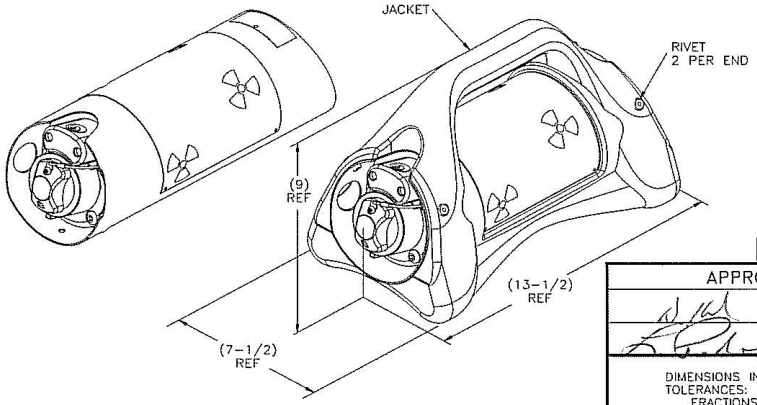

TRANSPORT PACKAGE WITHOUT & WITH OPTIONAL JACKET

PART NAME	QTY	MATERIAL
RIVET	4	~~ALUMINUM/STAINLESS STEEL~~
OPTIONAL JACKET	1	~~POLYURETHANE~~
SECURITY SCREW	8	18-8 SS - SEE SHEET 6 NOTE B
SOURCE ID TAG	1	~~STAINLESS STEEL OR STEEL~~
TRANSPORT LABEL	1	~~STAINLESS STEEL OR STEEL - FIRE PROOF~~
SOURCE WIRE ASSEMBLY	1	MODEL 424-9 OR EQUIVALENT
~~SHIELD ASSEMBLY~~	~~1~~	~~SEE SHEET 5~~
FRONT PLATE ASSEMBLY	1	SEE SHEET 4
REAR PLATE ASSEMBLY	1	SEE SHEET 3
~~BODY ASSEMBLY~~	~~1~~	~~SEE SHEET 2~~

ERF 2560

APPROVALS
8 Apr-11
11 Apr 11

DIMENSIONS IN INCHES
TOLERANCES:
FRACTIONS ±1/16
X ± 0.1
XX ± 0.01
XXX ± 0.005

QSA GLOBAL
40 NORTH AVE, BURLINGTON, MA 01803

DESCRIPTIVE DRAWING

TITLE MODEL 880 PROJECTOR

SIZE A | DWG. NO. R88000 | REV R
SCALE: NONE | SHEET 1 OF 6

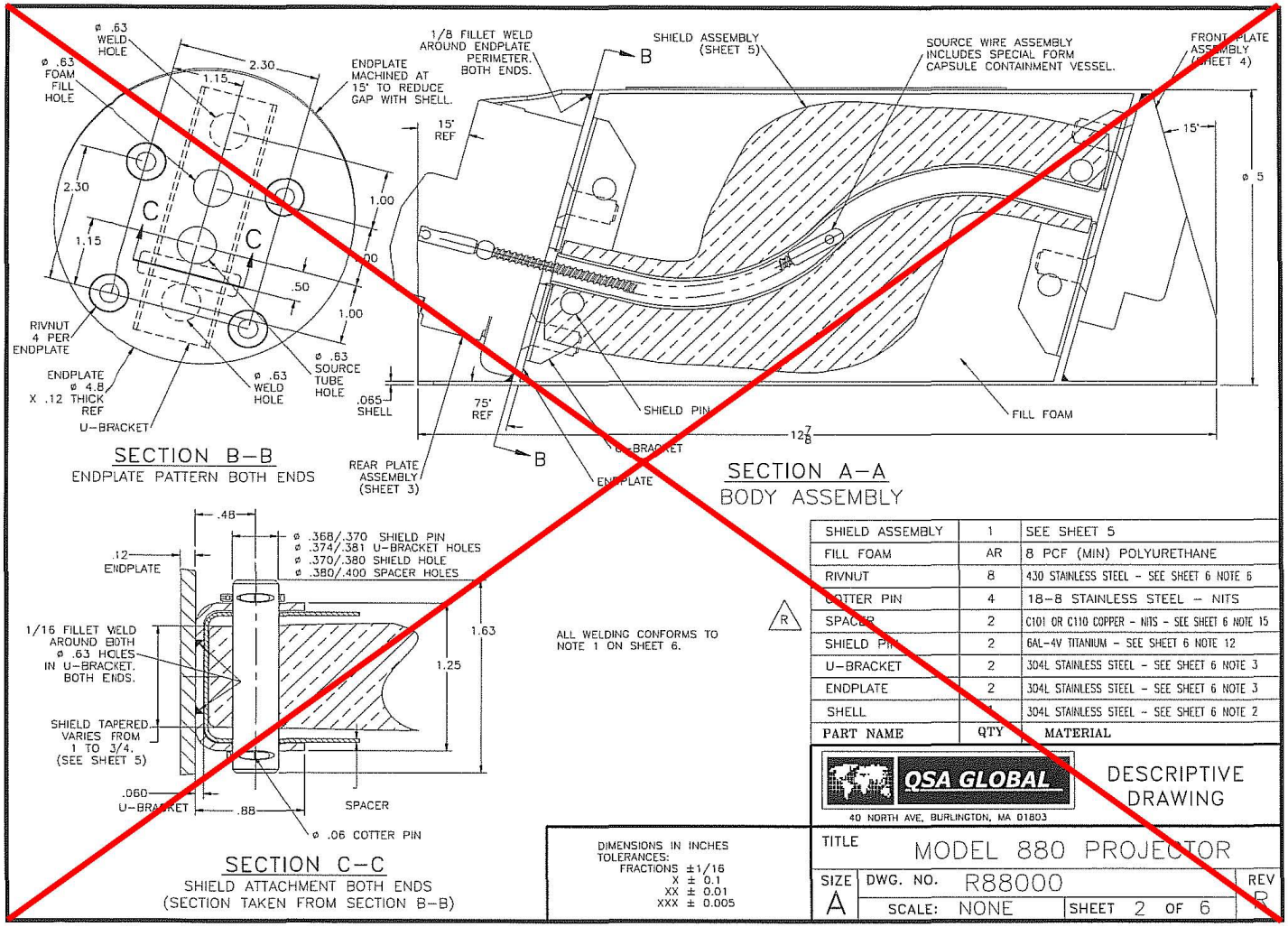
ø .63 WELD HOLE
ø .63 FOAM FILL HOLE
2.30
1.15
ENDPLATE MACHINED AT 15° TO REDUCE GAP WITH SHELL.
1/8 FILLET WELD AROUND ENDPLATE PERIMETER. BOTH ENDS.
SHIELD ASSEMBLY (SHEET 5)
SOURCE WIRE ASSEMBLY INCLUDES SPECIAL FORM CAPSULE CONTAINMENT VESSEL.
FRONT PLATE ASSEMBLY (SHEET 4)
15° REF
15°
ø 5
1.00
.50
RIVNUT 4 PER ENDPLATE
ENDPLATE ø 4.8 X .12 THICK REF
U-BRACKET
ø .63 WELD HOLE
ø .63 SOURCE TUBE HOLE
.065 SHELL
75° REF
SHIELD PIN
FILL FOAM
12 7/8
REAR PLATE ASSEMBLY (SHEET 3)
U-BRACKET
ENDPLATE
SECTION B-B
ENDPLATE PATTERN BOTH ENDS
SECTION A-A
BODY ASSEMBLY
.48
.12 ENDPLATE
ø .368/.370 SHIELD PIN
ø .374/.381 U-BRACKET HOLES
ø .370/.380 SHIELD HOLE
ø .380/.400 SPACER HOLES
1/16 FILLET WELD AROUND BOTH ø .63 HOLES IN U-BRACKET. BOTH ENDS.
1.63
1.25
SHIELD TAPERED VARIES FROM 1 TO 3/4. (SEE SHEET 5)
.060 U-BRACKET
.88
SPACER
ø .06 COTTER PIN
SECTION C-C
SHIELD ATTACHMENT BOTH ENDS
(SECTION TAKEN FROM SECTION B-B)
ALL WELDING CONFORMS TO NOTE 1 ON SHEET 6.
R
SHIELD ASSEMBLY 1 SEE SHEET 5
FILL FOAM AR 8 PCF (MIN) POLYURETHANE
RIVNUT 8 430 STAINLESS STEEL - SEE SHEET 6 NOTE 6
COTTER PIN 4 18-8 STAINLESS STEEL - NITS
SPACER 2 C101 OR C110 COPPER - NITS - SEE SHEET 6 NOTE 15
SHIELD PIN 2 6AL-4V TITANIUM - SEE SHEET 6 NOTE 12
U-BRACKET 2 304L STAINLESS STEEL - SEE SHEET 6 NOTE 3
ENDPLATE 2 304L STAINLESS STEEL - SEE SHEET 6 NOTE 3
SHELL 304L STAINLESS STEEL - SEE SHEET 6 NOTE 2
PART NAME QTY MATERIAL
QSA GLOBAL
40 NORTH AVE. BURLINGTON, MA 01803
DESCRIPTIVE DRAWING
DIMENSIONS IN INCHES
TOLERANCES:
FRACTIONS ±1/16
X ± 0.1
XX ± 0.01
XXX ± 0.005
TITLE MODEL 880 PROJECTOR
SIZE A
DWG. NO. R88000
REV R
SCALE: NONE
SHEET 2 OF 6

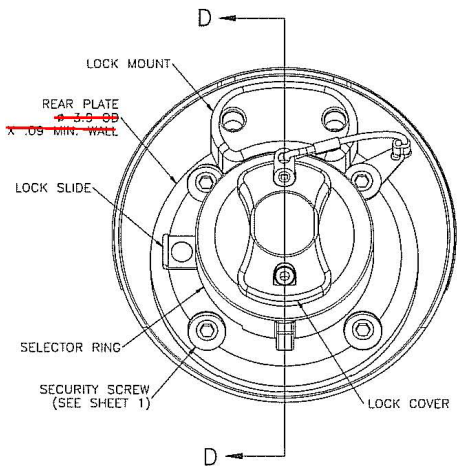

REAR PLATE ASSEMBLY

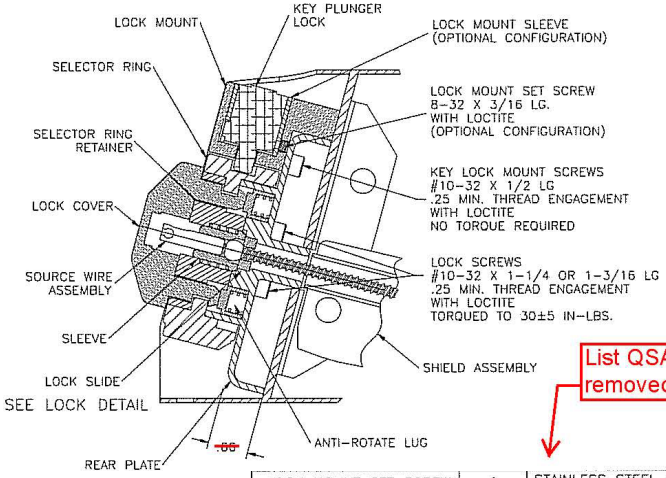

SECTION D-D

List QSA Part # for removed materials

PART NAME	QTY	MATERIAL
LOCK MOUNT SET SCREW	1	STAINLESS STEEL – NITS
LOCK MOUNT SLEEVE	1	~~STAINLESS STEEL – NITS~~
KEY LOCK MOUNT SCREW	2	STAINLESS STEEL – NITS
LOCK MOUNT	1	~~6061 ALUM/STN STL NITS SEE SHEET 5 NOTE 17~~
LOCK COVER	1	~~6061 ALUM/STN STL NITS SEE SHEET 5 NOTE 17~~
ANTI-ROTATE LUG	2	~~STAINLESS STEEL – NITS~~
LOCK SLIDE	1	~~17-4 PH SS – SEE SHEET 6 NOTE 4~~
SLEEVE	1	~~TUNGSTEN – SEE SHEET 6 NOTE 13~~
SELECTOR RING	1	~~CF10FA SS – SEE SHEET 6 NOTE 10~~
LOCK SCREW	4	SS0430 SS – SEE SHEET 6 NOTE 7
SELECTOR RING RETAINER	1	~~303 SS – SEE SHEET 6 NOTE 5~~
REAR PLATE	1	~~304 SS – SEE SHEET 6 NOTE 9~~

R

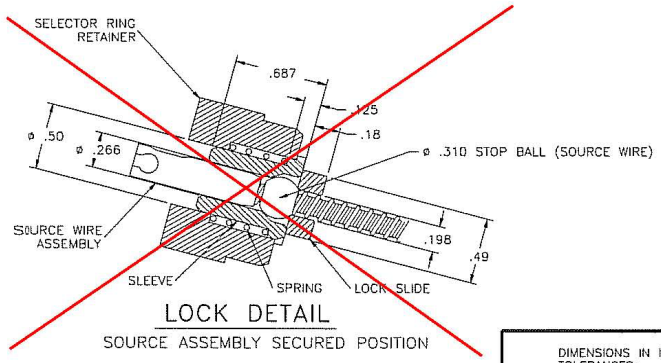

LOCK DETAIL

SOURCE ASSEMBLY SECURED POSITION

DIMENSIONS IN INCHES
TOLERANCES:
FRACTIONS ±1/16
X ± 0.1
XX ± 0.01
XXX ± 0.005

QSA GLOBAL
40 NORTH AVE, BURLINGTON, MA 01803

DESCRIPTIVE DRAWING

TITLE MODEL 880 PROJECTOR

SIZE A | DWG. NO. R88000 | REV R

SCALE: NONE | SHEET 3 OF 6

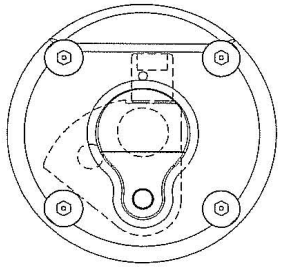

SHIPPING POSITION

PORT COVERED & SHIELDED.

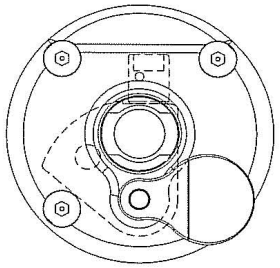

LOCKED POSITION

LIFT KNOB & ROTATE 90°. PORT SHIELDED.

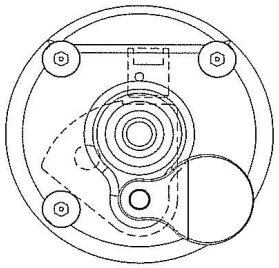

CONNECT POSITION

INSERT & ROTATE FITTING TO RELEASE SLIDER. PORT SHIELDED.

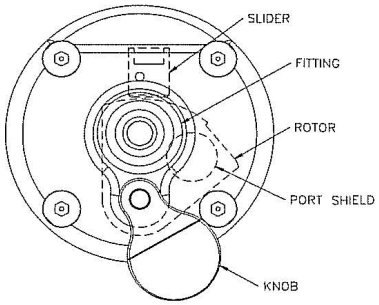

EXPOSE POSTION

ROTATE KNOB 50° TO TURN ROTOR. PORT OPEN.

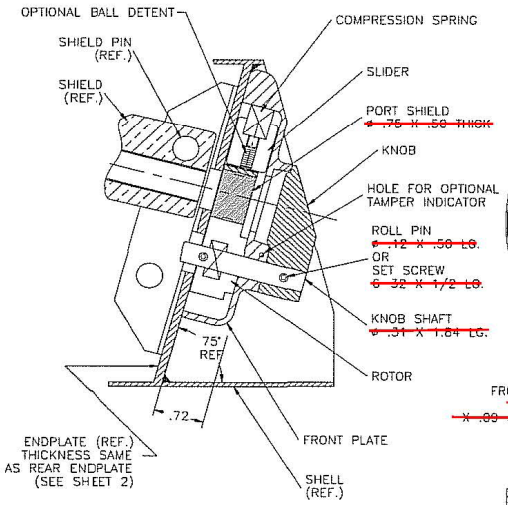

SECTION F–F

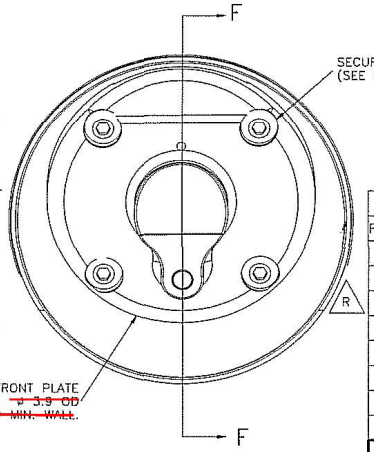

FRONT PLATE ASSEMBLY

List QSA Part # for removed materials

PART NAME	QTY	MATERIAL
BALL DETENT	1	~~BRASS – NITS~~
ROLL PIN/SET SCREW	1/1	~~STAINLESS STEEL – NITS~~
ROLL PIN	2	~~STAINLESS STEEL – NITS~~
KNOB SHAFT	1	~~C360 BRASS – NITS – SEE SHEET 6 NOTE 16~~
SLIDER	1	~~C360 BRASS – NITS – SEE SHEET 6 NOTE 16~~
PORT SHIELD	1	~~TUNGSTEN – NITS~~
ROTOR	1	~~STAINLESS STEEL – NITS~~
KNOB	1	~~STAINLESS STEEL – NITS~~
FRONT PLATE	1	~~STAINLESS STEEL – NITS~~

QSA GLOBAL
40 NORTH AVE, BURLINGTON, MA 01803

DESCRIPTIVE DRAWING

DIMENSIONS IN INCHES
TOLERANCES:
FRACTIONS ±1/16
X ± 0.1
XX ± 0.01
XXX ± 0.005

TITLE MODEL 880 PROJECTOR

SIZE A | DWG. NO. R88000 | REV R

SCALE: NONE | SHEET 4 OF 6

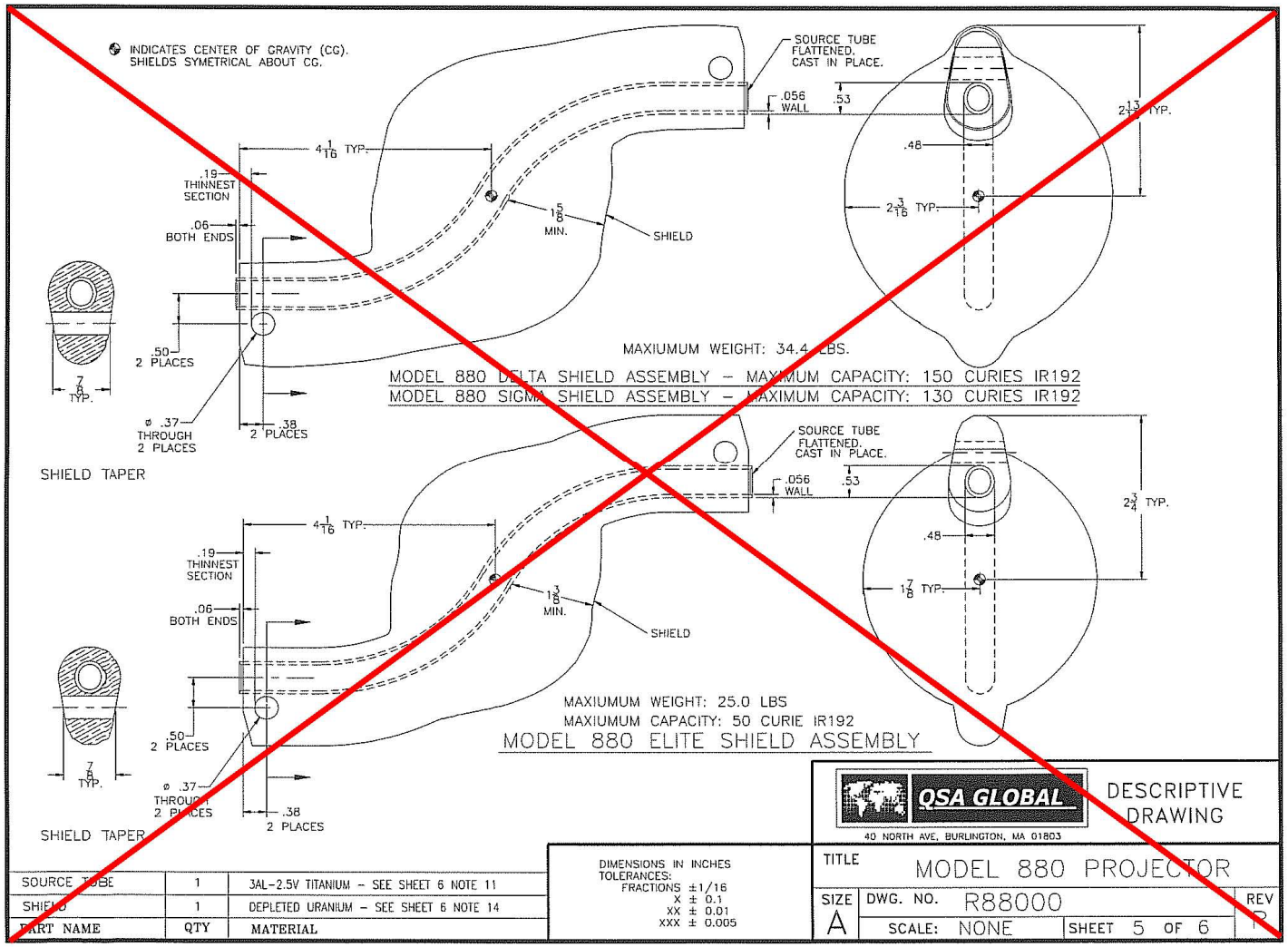
INDICATES CENTER OF GRAVITY (CG).
SHIELDS SYMETRICAL ABOUT CG.
SOURCE TUBE FLATTENED, CAST IN PLACE.
.056 WALL
.53
2 13/16 TYP.
.48
2 3/16 TYP.
4 1/16 TYP.
.19 THINNEST SECTION
.06 BOTH ENDS
1 3/8 MIN.
SHIELD
.50 2 PLACES
7/8 TYP.
ø .37 THROUGH 2 PLACES
.38 2 PLACES
SHIELD TAPER
MAXIUMUM WEIGHT: 34.4 LBS.
MODEL 880 DELTA SHIELD ASSEMBLY – MAXIMUM CAPACITY: 150 CURIES IR192
MODEL 880 SIGMA SHIELD ASSEMBLY – MAXIMUM CAPACITY: 130 CURIES IR192
SOURCE TUBE FLATTENED, CAST IN PLACE.
.056 WALL
.53
2 3/4 TYP.
.48
1 7/8 TYP.
4 1/16 TYP.
.19 THINNEST SECTION
.06 BOTH ENDS
1 3/8 MIN.
SHIELD
.50 2 PLACES
7/8 TYP.
ø .37 THROUGH 2 PLACES
.38 2 PLACES
SHIELD TAPER
MAXIUMUM WEIGHT: 25.0 LBS
MAXIUMUM CAPACITY: 50 CURIE IR192
MODEL 880 ELITE SHIELD ASSEMBLY
QSA GLOBAL
40 NORTH AVE, BURLINGTON, MA 01803
DESCRIPTIVE DRAWING
SOURCE TUBE | 1 | 3AL-2.5V TITANIUM – SEE SHEET 6 NOTE 11
SHIELD | 1 | DEPLETED URANIUM – SEE SHEET 6 NOTE 14
PART NAME | QTY | MATERIAL
DIMENSIONS IN INCHES
TOLERANCES:
FRACTIONS ±1/16
X ± 0.1
XX ± 0.01
XXX ± 0.005
TITLE MODEL 880 PROJECTOR
SIZE A
DWG. NO. R88000
REV P
SCALE: NONE
SHEET 5 OF 6

NOTES:

~~1. AS OF 19 MARCH 2008, ALL WELDING AND INSPECTION FOR COMPONENTS PURCHASED AND ASSEMBLED ON OR AFTER 19 MARCH 2008 IS PER THE REQUIREMENTS OF:~~

~~AWS D1.3: 1998 STRUCTURAL WELDING CODE – SHEET METAL~~

~~AWS D1.6: 1999 STRUCTURAL WELDING CODE – STAINLESS STEEL~~

~~INSPECTED BY WELD INSPECTORS QUALIFIED TO ASNT SNT-TC-1A.~~

~~NOTES 2 THRU 11 APPLICABLE TO COMPONENTS FABRICATED AFTER 1 DECEMBER 2010:~~

~~2. TYPE 304L STAINLESS STEEL PER ASTM A249 OR A269.~~

~~3. TYPE 304L STAINLESS STEEL PER ASTM A240 OR A666.~~

~~4. TYPE 630 (17-4 PH) STAINLESS STEEL PER ASTM A564/A564M.~~

~~5. TYPE 303 STAINLESS STEEL PER ASTM A582/A582M.~~

~~6. TYPE 430 STAINLESS STEEL PER ASTM A276 OR A580 PER NAS1330.~~

~~7. UNS S30430 STAINLESS STEEL PER FEDERAL SPECIFICATION FF-S-86.~~

8. TYPE 18-8 STAINLESS STEEL WITH THE FOLLOWING MECHANICAL PROPERTIES:
   MINIMUM ULTIMATE TENSILE STRENGTH = 70,000 PSI,
   MINIMUM YIELD STRENGTH (2% OFFSET) = 45,000 PSI,
   MINIMUM ELONGATION (IN 2 INCHES) = 30%.

~~9. TYPE 304 STAINLESS STEEL PER ASTM A276, A479, A240, A666, OR A743 GRADE CF3.~~

~~10. TYPE CF16FA STAINLESS STEEL PER ASTM A743.~~

~~11. TYPE 3AL-2.5V TITANIUM PER ASTM B338 GRADE 9.~~

~~12. TYPE 6AL-4V TITANIUM PER ASTM B348.~~

~~13. TUNGSTEN PER ASTM B777 CLASS 1.~~

~~14. MINIMUM 99% DEPLETED URANIUM IN AS CAST CONDITION.~~

~~NOTES 15 THRU 17 APPLICABLE TO COMPONENTS FABRICATED AFTER 11 APRIL 2011:~~

~~15. TYPE C101 OR C110 COPPER.~~

~~16. TYPE C360 BRASS.~~

~~17. TYPE 6061 ALUMINUM.~~

The only material specification a user of this package would require is for the screws that hold the end plates to the package. All other components should be obtained from the package manufacturer (or source supplier in the case of the source ID tag).

These material specifications should appear in the SAR as package users have no need for this information since they will not use parts that are not obtained from the package manufacturer.

Welding will not be performed by package users as they will not have a QA approved program to allow package welding. Only the manufactuer will weld, therefore this information does not need to appear anywhere outside of the SAR.

~~R NOTES 15 THRU 17 AND APPLICABILITY ADDED~~

QSA GLOBAL

40 NORTH AVE, BURLINGTON, MA 01803

DESCRIPTIVE DRAWING

DIMENSIONS IN INCHES
TOLERANCES:
FRACTIONS ±1/16
X ± 0.1
XX ± 0.01
XXX ± 0.005

TITLE	MODEL 880 PROJECTOR	
SIZE A	DWG. NO. R88000	REV R
	SCALE: NONE	SHEET 6 OF 6

Generic Regulatory Issues