Official Transcript of Proceedings

NUCLEAR REGULATORY COMMISSION

Title: Advisory Committee on Reactor Safeguards
Subcommittee on Plant License Renewal

Docket Number: (n/a)

Location: Rockville, Maryland

Date: Wednesday, October 19, 2011

Work Order No.: NRC-1216 Pages 1-159

NEAL R. GROSS AND CO., INC.
Court Reporters and Transcribers
1323 Rhode Island Avenue, N.W.
Washington, D.C. 20005
(202) 234-4433

UNITED STATES OF AMERICA

NUCLEAR REGULATORY COMMISSION

+ + + + +

ADVISORY COMMITTEE ON REACTOR SAFEGUARDS

(ACRS)

+ + + + +

SUBCOMMITTEE ON PLANT LICENSE RENEWAL

+ + + + +

WEDNESDAY

OCTOBER 19, 2011

+ + + + +

ROCKVILLE, MARYLAND

+ + + + +

The Subcommittee met at the Nuclear Regulatory Commission, Two White Flint North, Room T2B3, 11545 Rockville Pike, at 8:30 a.m., John Sieber, Chairman, presiding.

SUBCOMMITTEE MEMBERS PRESENT:

JOHN D. SIEBER, Chairman

WILLIAM J. SHACK

GORDON R. SKILLMAN

JOHN W. STETKAR

CONSULTANTS TO THE SUBCOMMITTEE PRESENT:

JOHN J. BARTON

NRC STAFF PRESENT:

KENT L. HOWARD, SR., Designated Federal Official

GREGORY PICK *

MELANIE GALLOWAY

ARTHUR CUNANAN

BILL HOLSTON

JIM GAVULA *

MICHELLE KICHLINE

MATT HOMIACK

ALLEN HISER

CHING NG

CHRIS SYDNOR

JEFF POEHLER

ALSO PRESENT:

DALE ATKINSON
DAVID SWANK
JOHN TWOMEY
MOT HEDGES
DONALD GREGOIRE
SCOTT WOOD
ABBAS MOSTALA
STEVE RICHTER
DAVID LEE
BRIAN ADAMI
JOHN SISK
JOHN LaSALLE
CAROLYN BEAUDRY
JIM HAMLEN
JACK COLE

* Present via telephone

C-O-N-T-E-N-T-S

	PAGE
Opening Remarks - Jack Sieber, ACRS	5
Staff Introductions and Review Context	9
Energy Northwest - Columbia Generating Station	
A. Introduction	15
B. General Plant Overview	17
C. Plant Status/Major Improvements	42
D. License Renewal Application	52
E. SER Open Items	64
F. Concluding Remarks	99
NRC Staff Presentation SER Overview	
A. Introduction	103
B. Scoping and Screening Results	106
C. Onsite Inspection Results	106
D. Aging Management Review	116
E. Open Items/Time-Limited Aging Analyses	122
F. Conclusion	144
Subcommittee Discussion	152

P-R-O-C-E-E-D-I-N-G-S

8:26 a.m.

CHAIR SIEBER: The meeting will now come to order. This is a meeting of the Plant License Renewal Subcommittee. My name is John Sieber, Chairman of this subcommittee meeting.

ACRS members in attendance are, John Stetkar, Bill Shack, Gordon Skillman, and also with us is John Barton, a former ACRS member and currently an ACRS consultant.

Kent Howard of the ACRS staff is the Designated Federal Official for this meeting. The subcommittee will review the license renewal application for the Columbia Generating Station and the associated Safety Evaluation Report with Open Items.

I note that there are six open items currently on the report that I have, which is about the maximum for a subcommittee meeting, so prior to the full committee meeting we expect all those open items to be resolved.

We will hear presentations from NRC staff, Energy Northwest representatives and other interested persons regarding this matter. I would like to add that the Region IV inspector, Mr. Gregory Pick, is

also participating in this meeting via bridge line.

Mr. Pick, if you are on the bridge line could you please acknowledge?

MR. PICK: I'm on the bridge.

CHAIR SIEBER: Okay, thank you. And I'll leave the bridge line open during this meeting for your participation, and I note that you are scheduled at 10:15 or thereabouts to make a presentation.

We have not received written comments or requests for time to make oral statements from members of the public regarding today's meeting. The entire meeting will be open to public attendance.

The subcommittee will gather information, analyze relevant issues and facts and formulate proposed positions and actions as appropriate for deliberation by the full committee.

The rules for participation in today's meeting have been announced and part of the notice of this meeting, previously published in the Federal Register.

A transcript of this meeting is being kept and will be made available as stated in the Federal Register notice. Therefore, we request that participants in this meeting use microphones located throughout the meeting room when addressing the

subcommittee.

The participants should first identify themselves and speak with sufficient clarity and volume so that they may be readily heard.

Now I would point out that the Plant Operations and Fire Protection Subcommittee did visit the Columbia Generating Station in, I think it was July of 2010, and we had eight members of the ACRS with us at that time.

So we have some familiarity not only with the Generating Station but also its operating organization in the surrounding site and environment including the DOE activities at the Hanford Reservation.

That was an important and worthwhile visit for us to make to your plant. It gives us a better background and understanding of the condition of the plant, the competence and the willingness of the site personnel to properly manage the plant, and also the environmental impacts that may be caused either by the plant or by DOE activities which is in the surrounding area.

And I note that DOE has done a lot of remediation work in that area and that continues on, and there's no evidence that I can recall of any

environmental impact other than as is stated in the environmental report into the Generating Station on that site.

We will now proceed with the meeting and I call upon Melanie Galloway to begin. Melanie?

MS. GALLOWAY: Thank you, Mr. Sieber. My name is Melanie Galloway. I'm the Acting Director of the Division of License Renewal. Brian Holian, who is the director who would normally be here, is currently taking an assignment as the Acting Office Director of our Office of Research.

So while I'm assuming the role of director, Mark Delligatti, to my right, has stepped in to fill my position as the Acting Deputy Director of the Division of License Renewal.

Mark comes to us from the Office of Federal and State Materials and Environmental Management Program and we're glad to have him.

To my left is Dennis Morey, who is the responsible Branch Chief for the project management of the Columbia License Renewal Application. In addition, we have a number of staff here to support this discussion today.

We have our three technical branch chiefs from the Division, Dave Pelton, Bo Pham and Raj

Auluck. In addition, they each have staff as well to support any line of question that may come up.

In addition, besides Greg Pick, who Mr. Sieber indicated is on the phone, he will be discussing the regional inspection. He's a very experienced inspector having led five 71002 inspections already, the most recent being the Columbia.

In addition, on the phone we have Jim Gavula, a member of Dave Pelton's staff located in our Region III office. And also have Dan Knotts, a very experienced consultant of ours in Oak Ridge in the concrete and concrete degradation area.

As we normally do, I'd like to give a little bit of context to the Columbia review. As the ACRS is aware, we've experienced a seven-month delay in the schedule associated with our review.

And the challenges that resulted in that delay have to do with the applicants needing additional time than what we normally allow in our schedule to respond to RAIs.

In addition, we have ten rounds of follow-up RAIs, so these two items contributed to our need to extend that schedule.

Now to the applicant's credit, in December

of 2010, they did re-look at the way they were responding to our RAIs and improved it. So that resulted in us not having to take at this point in time further delays in the schedule, so we appreciate that.

But it is important to note that we have a February 2012 due date right now for the issuance of our final safety evaluation, but given the RAIs that are outstanding, the open items that we have and the fact that there is significant work yet to be done on the part of the applicant as well as reviewed by the staff, there is a likelihood that we will have to consider a further schedule delay, because it will be extremely ambitious at this point for us to be able to meet that February 2012 date with the outstanding work yet to be done.

As I've mentioned, there are six open items. The committee will be familiar with one of them. The metal fatigue issue has already been talked about on Salem-Hope Creek.

But the other five issues are unique to Columbia, and so that will be an opportunity for us all to engage in some new items that are coming up for us in the license renewal arena.

There is one particular open item that I

do want to discuss and it's the operating experience open item. This is an area that has been of increasing importance and emphasis to the agency, and it's important to put it in context.

We have reviewed and renewed a large number of licenses as part of our license renewal program. However, there's only nine plants right now that are in a period of extended operation.

So there is not that much experience in transitioning and implementing all the Aging Management Programs that go into an approved license renewal.

And as a result of that the staff has done a lot of work in capturing operating experience in a number of documents. The most recent one being GALL, Rev 2. Most of the updates to that document had to do with changes and improvements and understandings in operating experience.

In addition, we put out Information Notices and we put out ISGs, all of which has connection on operating experience.

While the staff is doing a lot of work in this regard, we do have an expectation that applicants, as they go into their period of extended operation will do likewise, independent work to ensure

that they are understanding operating experience at their site and in the industry to ensure that their Aging Management Programs will remain effective over that period of extended operation.

Based on some recent observations that we've had, we've found that there might be some challenges for applicants as they go into this period of extended operation to ensure that their Aging Management Programs are maintained up-to-date in light of operating experience.

In particular, we see changes and turnover of staff, we see training opportunities that need to be met, but perhaps most important we see program updates.

The idea that applicants as they go into the PEO need to understand what changes and what thresholds need to be met in order for those changes to occur both in terms of thresholds of what information along the lines of operating experience that need to be shared with the industry, and what thresholds need to be met so that they can update their Aging Management Programs effectively all the time.

10 CFR 54 requires that applicants as part of their application are able to demonstrate the

effectiveness of their Aging Management Programs over time, and for the staff that includes operating experience.

So as a result of our emphasis in this area and the understandings that we have gained, we're putting increasing expectations on what applicants need to include in their application to demonstrate that they are going to be in a position to manage their programs over time, and that includes a key component of operating experience.

So we'll get into a little bit more detail with the applicant and the staff in discussing this open item, but that gives you a little bit of background as to how we have come up to this point.

I should note as well that we've also recently put out an Interim Staff Guidance document for comment.

We had a public meeting last week with the industry and stakeholders, which was a very good discussion, that is going to allow all of us to get better alignment. The NRC has put out better guidance in this regard that clearly indicates what we've expected all along, but more appropriately states and makes sure that everyone else understands what our expectations are regarding operating experience in the

period of extended operation.

At this point that concludes my opening remarks and I'll turn it over to Dale Atkinson, the applicant.

MR. ATKINSON: Thank you very much. I'm Dale Atkinson, vice president of Employee Development and Corporate Services for Energy Northwest.

Mr. Chairman and distinguished members of the ACRS, we thank you for the opportunity to come here and talk to and to bring our team from Energy Northwest to present the License Renewal Application for Columbia Generating Station.

I would like to say just a little bit about the team I've got up here at the front. Again, my name's Dale Atkinson. I've been at Energy Northwest for over 22 years.

Represented here amongst the five of us is in excess of 100 years of operating experience at Columbia Generating Station alone, and thus the gray hair and other challenges here.

But beyond that I've held a number of positions at Energy Northwest including Chief Nuclear Officer. When I return tonight, starting tomorrow I'll be Acting Chief Nuclear Officer again and then over the weekend Chief Executive Officer for a little

awhile.

And that's how it works in an organization of 1,200 and some odd people. For myself personally, besides the period at Oregon State, I do have experience starting up other nuclear reactors for General Electric Company.

I presently chair the Operations Subcommittee at the Cooper Nuclear Station. I also chair the Advisory Committee on Nuclear Engineering and Radiation Health Physics at Oregon State University.

I would like to take a moment to introduce my team here. To my immediate left is Dave Swank. Dave is our Engineering General Manager. To his left is Don Gregoire, Manager of Regulatory Affairs.

To Don's left is John Twomey. John is the incoming License Renewal Project Manager and he is taking the reins in that regard from the gentleman to his left, Abbas Mostala, who has followed this project and provided the leadership on it to date, so thank you, Abbas.

We also have quite a number of staff throughout the room to provide the backup support should we need some detailed discussion on a topic that we at the front table might not have the level of

detail that becomes necessary.

Mr. Chairman, we do have an agenda that includes discussion about Energy Northwest and an overview of Columbia Generating Station, and I do understand that several of you have been to the site and seen it.

So we'll move through that part expeditiously except as individuals need some specific questions answered, provide you a plant status and an indication of some of the major improvements.

I think you'll see a pattern of significant investment in Columbia Generating Station. We will of course talk about the License Renewal Application, the open items on the Safety Evaluation Report, and then I'll provide some concluding remarks.

So just quickly, Energy Northwest itself, we are a public agency. We have been providing public power in the Northwest since 1957. Our largest generating facility is Columbia Generating Station, but in addition to that we do have hydroelectric, solar and wind projects.

For those of you that visited the site, you may have seen the solar project adjacent to Columbia Generating Station. The entire output of Columbia Generating Station is provided to the

Bonneville Power Administration for distribution in the Northwest.

On the grid it is provided at cost, and between Bonneville and rate payers of the Northwest there is quite a dependence on the safe, efficient and reliable operation of Columbia Generating Station.

A little bit more about Energy Northwest, we are a joint operating agency and that means that we were authorized by the State of Washington to provide energy and energy services at cost to rate payers of the Northwest.

We have a membership that's comprised of 28 municipalities or/and public utility districts from across the state of Washington. For those of you that visited the site you'll recognize the next picture. It is an overhead view.

It is not as flat as that picture looks. We are located in Eastern Washington and in an area of the state that is surrounded by a lot of hydroelectric facilities or a lot of dams on the river.

You see Columbia Generating Station in the foreground with the six forced draft cooling towers to the immediate right there, the two ultimate heat sink cooling ponds right above that with the spray rings in operation.

If you go to the top of the picture that is the Columbia River, an enviable source of cooling water, very clean and cold with the high volumes. We're lucky to have that.

CONSULTANT BARTON: What are the two ponds to the right?

MR. ATKINSON: On the far right there, those are sewage treatment ponds.

CONSULTANT BARTON: Okay.

CHAIR SIEBER: Maybe since we have this picture this is a good time to ask questions about the general layout. But what's the ultimate heat sink for Columbia Generating Station?

MR. ATKINSON: Well, we -- do you want to answer that?

MR. SWANK: Sure. It's the two spray ponds. So we have 30-day volume in the ponds and then we have capability to make up. We could bring in trucks. We have capability to make up from the river as well.

CHAIR SIEBER: Okay, but now the river's three and a half miles from the site?

MR. SWANK: That's correct.

CHAIR SIEBER: And you have a screenhouse on the river?

MR. ATKINSON: That's correct.

CHAIR SIEBER: But do you consider the lines, the water line between the Columbia River screenhouse and the plant site as safety related, important to safety or just another water line in the ground?

MR. SWANK: It is not safety related. It's certainly beneficial to us to have it, although like I say, we have the capability to bring the water in by trucks if we need to.

CONSULTANT BARTON: Is it in-scope to license renewal? Is it in-scope? Is that an Aging Management Program or inspection program that piping that Jack just asked about?

MR. TWOMEY: Yes, it is.

CHAIR SIEBER: And okay, then you will later on explain a little bit what your Aging Management Program is for that line?

MR. TWOMEY: Okay.

CHAIR SIEBER: Okay, I would appreciate that.

MR. TWOMEY: We will make sure we do that.

CHAIR SIEBER: Now the EPZ, through this 50-mile EPZ includes a water plan for the reservation but it also includes the Tri-Cities area?

MR. TWOMEY: That's correct.

CHAIR SIEBER: And seemed to me the population is over a million people in that 50-mile zone, something like that including Indian reservation to the southwest, which grows a lot of fruits and vegetables.

When you have discharges from your plant do you discharge to the Columbia River?

MR. ATKINSON: Through our permit it'd be discharged into the Columbia River. In practice, what we have done for over ten years is only the blowdown flow that's required to maintain the salt concentration in the forced draft cooling towers at acceptable levels.

So we actually have not had a need to do a discharge, but we are permitted to discharge to the Columbia River within our operating license.

CHAIR SIEBER: And you have no real commercial vegetation, you know, farms or so forth basically -- well, there's a few, but not very much within the ten-mile EPZ? It's mostly desert as we can, there is semi-desert?

MR. ATKINSON: That's generally true, but we do have some. If you'd like a description we have an individual here that can cover the specifics.

CHAIR SIEBER: Yes, and I have read the environmental report and it's all in there.

MR. SWANK: You can actually see some of the orchards in the top part of the picture, you know, right across the river, on the other side of the river.

CHAIR SIEBER: Right, it's on the other side of the river. In fact, that's rising ground on the other side of the river.

MR. SWANK: Very much so.

CHAIR SIEBER: Okay. Okay, thank you.

MR. ATKINSON: All right, and just to point out as I said, this does look flat from that aspect, but the plant itself is 88 feet above the level of the river.

The next slide is intended to show the layout of the land we actually lease from the Department of Energy.

And essentially what we lease are 1,100 acres from the Department of Energy, includes an area roughly 2,000 meters in diameter that surrounds the plant and a corridor down to the Columbia River that includes the piping that was just discussed and the river water pumphouse.

We do maintain authorities as required for

management of an exclusion area, and we have a Memorandum of Understanding and lease agreements that I've reviewed that provide pretty good controls on what happens within that.

I think one thing to note, in fact, if we go back to that previous slide, Abbas, one thing to note on there that you brought up, Mr. Chairman, is that on the bottom you'll see that square of land.

That is the closest area to be remediated by the Department of Energy and those surveying activities have commenced there.

CHAIR SIEBER: Yes, we spent quite a bit of time during our visit going to the DOE sites. Not only this one but there's others --

MR. ATKINSON: Right, they're very similar to that.

CHAIR SIEBER: -- others in the area that have more activity than this one appears to have.

MR. ATKINSON: Okay, Abbas, on Slide 9. So this is an indication of the plant history, just a very, very high level. Construction permit was granted in 1973, operating license in 1983.

We have done a five percent uprate of the plant in 1995. The original plant was licensed to 3,323 megawatts-thermal, power uprate took us to 3,486

megawatts-thermal. We are not planning any further uprate at this time.

The general description of the facility is a General Electric BWR-5 with a Mark II containment. As I pointed out on the picture, we do have a plant circulated water system that utilizes six forced draft cooling towers and the ultimate heat sink does have makeup water available from the Columbia River.

CHAIR SIEBER: Okay, your fire protection water also comes from the site ponds?

MR. SWANK: Actually a combination.

CHAIR SIEBER: You can go from the river but --

MR. SWANK: Well, we actually have a bladder tank in addition to the circulating water basin so we're able to draw, different pumps draw off of those two sources.

CHAIR SIEBER: Okay, are you going into any detail on the containment structure? As I see it this containment is unique in the industry. It is a steel containment as opposed to other Mark IIs, and there aren't very many Mark II containments.

I presume you were going to the containment.

MR. ATKINSON: Okay, we will have a

discussion on the containment in just a minute here then. I don't think you'll find it particularly unique for a Mark II, but we'll go into the specifics of it here in just a moment. We'll do that.

Why don't we go ahead and jump into that discussion here for just a minute? John, if you'll go ahead and commence that with Slide 87, please.

MR. TWOMEY: I'm John Twomey. I've also been the civil lead on the project since its inception. Columbia, as this pulls up the slide, is a Mark II free-standing metal containment.

This is the picture of it. It is a over-under, which means we have a drywell-wetwell separated by reinforced concrete floor. We have a five-foot thick approximately, bioshield wall, reinforced concrete wall around it and then we have the reactor building proper.

And I do note, highlighted, we do have a sand pocket region that is at that elevation. It's a fully 360-degree circumferential which creates about 300 linear feet of sand pocket area. Next slide.

CHAIR SIEBER: Do you have any access -- well, the containment is basically all steel in this. It's free standing except it sits on the sandpile, is that correct?

MR. TWOMEY: No, it's free standing. As you can see on the bottom there's an inner and outer skirt on the drawing, so it physically sits on the skirts and the skirts sit on the foundation mat, and then we poured the concrete, both the concrete up underneath it and up the sides.

CHAIR SIEBER: Okay, so it does not sit on sand?

MR. TWOMEY: No, there -- next detail. So as we were constructing it we added this, first we had to pour the concrete underneath and come up the sides. We added this sand pocket region.

CHAIR SIEBER: Okay.

MR. TWOMEY: As you can see, the metal containment vessel, it starts to transition from vertical underneath into the ellipsoidal head. So that helped us pour the concrete around it, and as I said that is full 360 degrees.

CHAIR SIEBER: And my question is, inside the containment you also had concrete?

MR. TWOMEY: That's correct.

CHAIR SIEBER: So you have the bottom of the containment vessel sandwiched in between a concrete mass above it and concrete on the sides and sand at the bottom?

MR. TWOMEY: That's correct.

CHAIR SIEBER: How do you know the integrity of the steel portion of the containment in that area other than a leak test?

MR. TWOMEY: What we've done is, since in 1983 -- as you can see there's a drain pipe. There are eight of those coming off the sand pocket region.

We verified we had a free drain flow path through the pipe, and at that time we instituted a weekly check of the drain lines and that is, which slide is that that shows a picture of it, 91.

What we've got here is the drain lines from the sand pocket region are accessible at one of our elevations here. We have our equipment operators, at that time they're going out weekly to do a water check.

So basically what we're validating is that we've got no water in that sand pocket region which would then minimize any corrosion.

CHAIR SIEBER: How do you determine the drain line is not flushed?

MR. TWOMEY: We verified that back in '83 and again in '87, 1987. We've made a commitment to go back out by 2015 and verify that they are still free, that the drain lines are still a free flow path.

CHAIR SIEBER: Okay.

CONSULTANT BARTON: You may not be seeing what has come out of your drain pipe. However, if you've got a slight leakage up above that saturates the sand, how do you know you don't have wet sand sitting against the steel containment?

MR. TWOMEY: We have them pull a sand sample out of it.

CONSULTANT BARTON: You have not --

MR. TWOMEY: Not recently. We did it in 1987 and it was about two percent moisture.

MR. ATKINSON: John, why don't you show Slide 90 and the likely source of any water in leakage?

MR. TWOMEY: This is the very top of the containment. And what this is showing is we have a refueling bellows seal so when we flood up --

CONSULTANT BARTON: Which is a lot of plants do have leaks there.

MR. TWOMEY: Right. What isn't shown on this is we have six drain lines all through the plant and it's to do just -- right across here. So if the bellows seal would leak the water would splash, come down to here.

And we have six drain lines, they feed

into a common header and we have leak detection at that common header. We have a flow indicating switch that alarms in our control room over, at a flow of one gallon per minute or more.

CONSULTANT BARTON: How much?

MR. TWOMEY: One gallon per minute or more.

CONSULTANT BARTON: So it'll pick up one gallon a minute or more of leakage?

MR. TWOMEY: That's correct, and we calibrate that every six years. And I've checked, I've gone back to 1991 because that's what we have in our computer database, so it's readily available, and that alarm has not come in.

MEMBER SHACK: There is a filler in that gap?

MR. TWOMEY: Yes, there is, polyurethane.

MEMBER SHACK: What is it, polyurethane?

MR. TWOMEY: It's polyurethane foam. It's sheet foam. It was placed in there as a spacer between the concrete and the metal containment. We didn't want the concrete poured up against the metal containment.

And it's primary function is for thermal, thermal growth of the primary container.

CONSULTANT BARTON: Now you never had an opportunity to go look in that gap area, have you?

MR. TWOMEY: Not yet. We have made a commitment prior to the period of extended operation, yes. Just below here, about ten feet below that we have these eight inspection ports.

CONSULTANT BARTON: That's one of them right there?

MR. TWOMEY: That's one of the eight. We will physically remove that. We can get in behind there, as well as when we pull out the inspection ~~quarter~~ port off the backside that is also carbon steel and has been exposed to the same environment as the primary containment vessel and we will do inspections on that.

We've made the commitments to do that both in the fourth interval, ISI interval, which is the ten years prior to the period of extended operation, and then again at no more than -- including the ten-year period of extended operation adjustable based on what we find.

MEMBER SHACK: And the coating on the outside of that vessel is?

MR. TWOMEY: I'm not sure what the coating is although we do inspect it. We do have a coatings

program. But we inspect all the coatings.

MEMBER SHACK: But you haven't looked at the coating on the outside?

MR. TWOMEY: There is no coating on the, it's only on the backside.

MEMBER SHACK: So it's bare steel.

MR. TWOMEY: It's bare carbon steel, that's correct.

MEMBER SHACK: Just another curious thing. In the suppression pool then you have the layer of reinforced concrete at the bottom.

MR. TWOMEY: That's correct.

MEMBER SHACK: So this thing is exposed to the water now. What kind of chemistries do you get in that pool, or how do you control that chemistry in the pool?

CHAIR SIEBER: You're talking about the suppression pool?

MEMBER SHACK: Yes.

MR. TWOMEY: Yes, I'll ask Mot Hedges to come up and talk about that.

MR. HEDGES: Mot Hedges, plant chemistry. The suppression pool is demineralized water and it is periodically run through a filter and demineralizer to maintain purity, and it's essentially to demineralize

water. We have --

MEMBER SHACK: Does it become alkaline from the concrete?

MR. HEDGES: No.

MEMBER SHACK: Just too much of it. Well, the concrete is coated.

MR. TWOMEY: That's correct. The concrete in the suppression pool is coated, that's correct. And that is underneath our --

MEMBER SHACK: And it's coated with what?

MR. TWOMEY: I'll have to get you the --

MEMBER SHACK: Assuming it's an epoxy-like coating?

MR. TWOMEY: It's an epoxy coating, right. And that falls underneath our Class 1 coatings program. And we go in every outage and check the coatings with the diagram.

MEMBER SKILLMAN: This is Dick Skillman.

MR. TWOMEY: Yes.

MEMBER SKILLMAN: Are the water chemistry conditions for the suppression pool water governed by your tech specs?

MR. TWOMEY: Again, Mot?

MEMBER SKILLMAN: The question is, are the water chemistry requirements for the suppression pool

water governed by your tech specs?

MR. HEDGES: Mot Hedges, plant chemistry. No, they're not. We have limits in our plant procedure site water chemistry too that cover those but they are not in tech specs.

MEMBER SKILLMAN: Thank you.

CHAIR SIEBER: Okay, now it looks to me as though the geometry of the suppression pool area including the containment wall on the inside is I think highly congested.

Have you ever during any outage been able to drain down this suppression pool, and do you, any kind of examination on the containment metal itself from the inside to determine whether it has flaws or corrosion or anything of that nature?

MR. TWOMEY: We have not drained down the suppression pool at any time. We do go in and use divers to do inspections of the suppression pool side of the containment.

CHAIR SIEBER: Okay, and what kind of inspection do they do?

MR. TWOMEY: It's under our ISI program.

CHAIR SIEBER: Yes, but --

MR. SWANK: It's a visual inspection.

CHAIR SIEBER: Is it ultrasonic?

MR. TWOMEY: No, it's a visual inspection.

CHAIR SIEBER: A visual inspection.

MR. SWANK: In fact, this outage we did a cleaning of the suppression pool to remove any, I'll call it, typically what we find is rust products. So we clean to keep our suction strainers in good health and then did the inspection.

CONSULTANT BARTON: Do they also inspect the downcomer pipes that go into the suppression pool? Are they looked at?

MR. SWANK: Interior or exterior?

CONSULTANT BARTON: The exterior of those, aren't they exposed to the water in the suppression pool?

MR. SWANK: Yes, they are.

CHAIR SIEBER: Yes, on both sides.

MR. TWOMEY: Mot?

MR. HEDGES: Mot Hedges, plant chemistry. I'm also one of the drywell coordinators, and the divers do go up into each one of the downcomers and do inspections inside and outside.

CONSULTANT BARTON: And what do you find?

MR. HEDGES: They have found, you mean like debris floating in there? Yes, they have found some debris in there and removed that.

CHAIR SIEBER: Could you tell us what the debris is?

MR. HEDGES: It's usually debris that falls in there from maintenances during the outage. So they go in and do a final cleanup, closeout, what we call a foreign material inspection.

CONSULTANT BARTON: So you don't cover those during an outage to prevent stuff from going down into the suppression pool?

MR. HEDGES: Some of them are covered. We can't really get to all of them. Some of them are in pretty dose rate areas.

MR. SWANK: I think for clarity, they're all covered but there's obviously a path for steam to get through as well.

MR. TWOMEY: Right. As you can see the top of the downcomers are in our drywell and they will have a cover plate on them.

MR. SWANK: They have a metal cover plates.

MR. TWOMEY: With a vertical, what we call jet deflectors. So for steam, you know, if you get a loss of coolant accident you flow down. But that would, as Mot said, provide a foreign material.

While we're doing activities in there we

might drop something down, so the divers do a cleanout.

CHAIR SIEBER: What's the inside diameter approximately of the downcomers?

MR. TWOMEY: We have a 24-inch and 28-inch opening for the downcomers.

CHAIR SIEBER: So it takes a skinny guy to do the inspection, and it is a visual?

MR. TWOMEY: That's correct.

CHAIR SIEBER: And it's underwater.

MR. TWOMEY: That's correct.

CHAIR SIEBER: In a 24-inch space.

MR. TWOMEY: That's correct.

CONSULTANT BARTON: You've got several of those capped. What's the reason for some of those being capped, downcomers?

MR. SWANK: Completely capped?

CONSULTANT BARTON: I read in your application I believe that three of your downcomer pipes have been capped.

MR. SWANK: We'll have to get you an answer.

CONSULTANT BARTON: I read it somewhere.

CHAIR SIEBER: Okay. Now a 24-inch, I don't think a person could actually enter a pipe like

that really? I couldn't, and I'm skinny.

MR. TWOMEY: Twenty-four inch pipe --

CHAIR SIEBER: And so any inspection you do either has to be with instruments that are on extended tubes, or it's just at the areas of accessibility by the inspector even if it's an underwater inspection?

MR. TWOMEY: The divers have been able to get up in there though. Again, they're not using tanks, I mean they're hooked up on air. I don't know if that helps somebody but I understand --

CHAIR SIEBER: I know how big a 24-inch hole is and it's ten inches smaller than my waist.

CONSULTANT BARTON: Can I get you to kind of answer that, because I did read I believe in your applications that three of the 102 downcomer pipes between the drywell and suppression pool have been capped.

MR. GREGOIRE: That is correct. I just --

MR. TWOMEY: I can tell you -- right.

MR. SWANK: We'll get you an answer on why they were capped. I think it's from initial construction but I'm not sure.

CONSULTANT BARTON: Well, you can get back to me, okay.

MEMBER SHACK: And the coating you inspected with divers, each outage the coating on the suppression pool?

MR. TWOMEY: That's correct.

MEMBER STETKAR: Have you had any indications of surface corrosion, coating failures? I'm assuming that the answer to that is yes, because any is an incomprehensible word.

MR. TWOMEY: Well, we did have one coating, I guess we'll call it a failure indication. The way our coatings program is set up, the coatings engineer is notified and he makes the determination whether we need to do the fix immediately or we can wait until the next outage.

They repaired that which now put that into them going back to the next outage. It was about a half-inch like crack in the coating. They went back, repaired that. Repaired it, went back the following outage and could not find it, so the fix had worked.

I mean yes, we have.

MEMBER STETKAR: And about what fraction of the whole surface do you typically inspect in an outage?

MR. TWOMEY: Don't know the answer.

MEMBER STETKAR: What I'm looking for is

whether you actually have indications and whether you have any trending. For example, if you found them do you keep any trending data of increasing corrosion rates or increasing failure rates or anything like that?

Because I'm trying to get a handle on, you know, what fraction do you inspect and what frequency do you go back and do inspections in same areas that you've found the indications?

MR. TWOMEY: Okay, we'll have to get you the percentage of what they do each outage, and I do know that if they find anything then they have to go back.

MEMBER STETKAR: Well, you said that the one that you did find was repaired and then the one that you recall --

MR. TWOMEY: Right, and when they had to go back the next year to do the follow-up they could not find it.

Mot, was there anything else you could add to that?

CHAIR SIEBER: Now the containment volume is about the same as a Mark I containment is, roughly. On the other hand, the layouts of this design is such that you don't have the expansions and contractions

during an accident condition that you have between the suppression pool and the remainder of containments since it's all in one vessel.

You have an inert atmosphere during the operation?

MR. TWOMEY: Yes, we do.

MR. SWANK: Yes, we do.

CHAIR SIEBER: And because of that you monitor containment leak rate? I take it your containments have a slightly positive pressure during normal plant operation?

MR. SWANK: That's correct.

CHAIR SIEBER: Okay, so you monitor the leak rate and the amount that you might have to add. Have you had any significant positive in-flows to maintain a containment atmosphere within specifications during normal operation?

MR. SWANK: No, we haven't seen any real change in the makeup rate that's required.

CHAIR SIEBER: Okay, thank you.

MR. ATKINSON: I understand we'll follow up on some coatings discussion at the -- hey, Scott, let's follow up at the end on that. Take a look at it.

CHAIR SIEBER: Any other questions on

containment?

MEMBER SHACK: Except for the coatings on the suppression pool.

MR. ATKINSON: And in my understanding you want to understand the inspection frequency --

MEMBER SHACK: Well, yes, just what the coating system is. Is it epoxy coat? You have epoxy on the concrete, what do have on the steel?

MR. TWOMEY: Okay.

(Off microphone comments.)

MR. ATKINSON: Okay, we have a response for the explanation of the three capped downcomers for you, sir.

MR. WOOD: Scott Wood, Columbia Generating Station. Originally there were 102 downcomer pipes, and during the assessment of the wetwell piping hydrodynamic loads it was found that the local water jet loads on the three containment vessel penetrations and their supports were excessive.

So to eliminate these loads, three of the downcomers were capped in the drywell region and that leaves 99 for venting steam.

CONSULTANT BARTON: Thank you.

MR. ATKINSON: Thank you, Scott.

CHAIR SIEBER: Any other questions about

the containment structure at this point? If not, maybe we can get back on the plan.

MR. ATKINSON: Thank you, Mr. Chairman. I'd like to turn the presentation over then to Dave Swank. Dave?

MR. SWANK: Thanks, Dale. We recently completed our 20th refueling outage for Columbia and we've done a number of major modifications during this outage. We replaced our main condenser.

So previously we had an admiralty brass condenser, we replaced that with a titanium condenser for reliability reasons. That also eliminated the copper source for potential fuel crudding buildup.

We also replaced our main generator rotor. So we have had two shorted turns on our main generator rotor. We've procured a new rotor and installed that this outage.

Finally we replaced the bolted connections within our non-segregated buses, so we went to a welded in flexible link connection similar to what we have on our isophase bus.

All three of these, we started up last month and to date all three have been performing very well for us.

CHAIR SIEBER: Did you have evidence of

microbiologically induced corrosion in your condenser?

MR. SWANK: In our condenser?

CONSULTANT BARTON: Did you have MIC in your condenser before you changed it?

MR. HEDGES: Mot Hedges, plant chemistry. There was no MIC of any significance.

CHAIR SIEBER: Do you have evidence of MIC attack anyplace in your chamber or piping that you know of and when, how do you control that stuff? It's got to be enormous.

MR. HEDGES: I believe there is some. I'll have to get back to you on the extent. What we do is in the circulating water and the plant service water, our raw water systems, we routinely halogenate with a combination of chlorine and bromine.

CHAIR SIEBER: Do you use gaseous chlorine?

MR. HEDGES: No, we use sodium hypochlorite and sodium bromite.

CHAIR SIEBER: Okay, thank you.

MEMBER STETKAR: I don't know, I'm trying to keep you on track here but you'll learn when you deal with us that's impossible.

Is it better to ask about scoping of things when you get to the scoping discussion, what's

in-scope what's out of scope?

And let me finish sort of the general, or should I ask you -- you mentioned non-segregated bus ducts and I had a question about the scoping of those things. Should I wait?

MR. SWANK: No, I think now is a good time.

MEMBER STETKAR: I know some of the bus ducts are in-scope and some of them are not in-scope. I didn't have an electrical drawing so I can't point to specific buses, but I also know in your operating experience you cited a, I guess an arc over-fault that you had. I don't know what the year is.

MR. SWANK: 2009.

MEMBER STETKAR: Thanks.

MR. SWANK: In August to be exact.

MEMBER STETKAR: Probably know the date and the minute.

MR. SWANK: I do actually know it.

MEMBER STETKAR: They're pretty exciting. And that was in an out of scope bus duct, is that correct?

MR. TWOMEY: That's correct.

MR. SWANK: That's correct. Yes, that was a 6.9 kV bus for a reactor recirculation auger.

MEMBER STETKAR: Did that fault cause any external effects? Did you have a fire or did you have any damage external to the bus duct when that fault occurred?

MR. SWANK: Do we have pictures?

PARTICIPANT: Yes, we do, unfortunately.

MR. ATKINSON: I guess the short answer to that is yes. You know, typical failure of one of these buses is fairly catastrophic. It creates a plasma and so anything in the immediate vicinity tends to have some burn damage to it.

CHAIR SIEBER: I think you showed us that area when we were on the plant -

MR. ATKINSON: Right. On the tour we took you up there and showed you where that --

MR. ATKINSON: And the center of the picture there's a better shot. That's where the bus used to be inside the bus duct.

CHAIR SIEBER: That wasn't insignificant as I recall.

MEMBER STETKAR: That's usually what they look like. The question I had is, is that bus routed through a room that contains any in-scope cables or electrical switch gear?

MR. SWANK: Yes.

MEMBER STETKAR: Okay, then why isn't that bus in-scope for license renewal, because obviously damage to that bus could affect safety related in-scope cables or switch gear?

MR. ATKINSON: It looks like we're going to have to do a little homework on that one and get back to you. While we do the homework though, would you please advance to Slide 48?

MR. MOSTALA: Which one?

MR. ATKINSON: Forty-eight, the next one. So that's what it looks like now, so those are the, well, the flexible connections that differentiate from the bolted connections that were subject to the problem that we experienced previously.

So what you can see from that it's a very durable connection that's actually got increased material, the increased thickness for improved margin as well.

CHAIR SIEBER: Perhaps my memory is faulty, but I recall that area in the plant as being sort of a labyrinth with crossing corridor-like structures?

MR. SWANK: Actually it's fairly wide open there. There's --

CHAIR SIEBER: Well, in the back end it

is, yes.

MR. SWANK: Yes, this actually happened right almost directly above switch gear. It's a fairly wide open area at that particular location.

CHAIR SIEBER: Okay.

MR. ATKINSON: So we'll get back to you on that scoping question.

MEMBER STETKAR: Sorry to interrupt, now you can go back there.

MR. SWANK: Sure. Okay, we're back to Slide 13.

CHAIR SIEBER: Yes, I think you're on 13.

MR. SWANK: We'll talk about some of the other major improvements that we made to the facility. I won't go through all of them, but I'd certainly be happy to answer the questions you have on any of them.

CONSULTANT BARTON: The only question I have is why the fourth diesel?

MR. SWANK: We went from a 72-hour LCO for our diesel generators, limiting condition for operation, to a 14-day limiting condition for operation, so as part of that we installed or purchased a fourth, this is a 480-volt diesel.

And so that allows us to connect and charge the batteries on either Division 1 or Division

2, and so it's basically a risk mitigation device.

MEMBER SHACK: Just on your hydrogen water chemistry, as I was reading your operating experience it appears that you have never found an SCC crack in your piping? Is that correct?

MR. SWANK: I'm going to turn to Steve Richter for --

MR. RICHTER: Steve Richter, Code Programs. Not in our piping, no. We've seen some on our vessel internals.

MEMBER SHACK: Right, but not on your piping. So you went from '84 to 2004 without hydrogen water chemistry and no crack?

MR. RICHTER: Correct.

CONSULTANT BARTON: Why did it take you 20 years to get there, 20 years before you implemented it? Why did it take you 20 years to implement hydrogen water chemistry when it's been around for a long time?

MR. RICHTER: Well, it hasn't been around -- we were keeping with the industry, but we did have the issue of copper in our system. The copper acts to poison our normal chemistry so, you know, we didn't -- noble metal comes through in 2001, which created the hydrogen water chemistry.

CHAIR SIEBER: Do you have any copper anyplace in the heat exchangers?

MR. RICHTER: We do have other heat exchangers that have copper, or 9:16:25, yes.

CHAIR SIEBER: Do you have any long term plans to replace those?

MR. RICHTER: No, not that I know of. I can get back to you on the system expert on that. Do we have anything else in our communicating with the reactor vessel, is that your question? Or just how the plant --

CHAIR SIEBER: Right.

MR. RICHTER: No, I don't believe we have any in our reactor cooling systems.

CHAIR SIEBER: Okay.

MR. RICHTER: That we communicate there.

MR. ATKINSON: Yes, we mentioned earlier the discussion about replacing the main condenser, so Dave has some information on that.

But basically that removed that admiralty brass and Muntz metal condenser and installed titanium that if you recall the previous solution for getting hydrogen effectively implemented with --

CONSULTANT BARTON: Got you.

MR. ATKINSON: To get the ECP,

electrochemical potential where you need it was to, the solution for our a plant like ours was to use a noble metals coating that took awhile to get developed.

And once that got developed and we got a hydrogen injection methodology available we installed it.

CONSULTANT BARTON: Got you, thank you.

CHAIR SIEBER: Thanks for mentioning that again. The first time around I was going to ask a question but now I will since I didn't before.

Generally speaking, when you replace admiralty metal with titanium there is a difference in strength of the tubes.

And the spacing between various plates within the condenser is if it's built for admiralty metal, generally speaking, to avoid tube vibration you have to change the distance between these plates. Did you do that?

MR. ATKINSON: We did a lot more.

MR. SWANK: Yes, we actually didn't replace the tubes, we replaced the modules. So we had 12 modules double stacked, three I'll call them trains. We pulled everything out and put all new in.

CHAIR SIEBER: Okay. So the actual tube

support plates were designed for titanium tubes as opposed to a re-tubing job?

MR. SWANK: That's correct.

CHAIR SIEBER: Well, it's good that you did that because I know personally that doing it the other way is not a good way to do it.

MR. ATKINSON: Our condenser replacement project was a very large scope project that replaced all material from one water box at one end, the inlet, to and including the water box at the other end. So everything in between was removed.

All that remained from the prior installation was essentially the shell which we stiffened.

So once we installed all the modules and basically all the metal that forms the ends of the condenser including the intermediate water boxes, we actually had constructed new water boxes and welded those on the end as well. So that entire scope of work is brand new.

CHAIR SIEBER: One more quick question. There is a number of lines that go into the condenser hot well, for example, heat pump recirculation lines and so forth.

Generally speaking, if they impinge on

titanium tubes the failure rate is higher than it would be with admiralty, and they put baffles in there. When you replaced all the modules did you replace the baffles?

MR. SWANK: Actually we moved the pipes down below so that they wouldn't impinge on the tubes.

CHAIR SIEBER: So you go directly to the hot well and not into the tube bundles?

MR. SWANK: Right. So we actually moved 16 large lines down below the water level.

CHAIR SIEBER: Okay, that was a good idea. Okay, thank you.

MR. SWANK: Okay, in 2007 we replaced the final stage of feedwater heating. We had seen stress corrosion cracking on the tubes and as a preemptive measure replaced the heaters themselves.

In 2007, we also replaced the turbine control systems or our digital electrohydraulic control systems main turbine and replaced it with a triple-redundant computer system to give us better reliability. Next slide, please.

In 2001, we went from a 12-month operating cycle to a 24-month operating cycle. So we're, I'd say we're somewhat unique being in the Pacific Northwest in the spring when the water flows off the

mountains we would in many cases be asked to either down-power or to shut down.

We're still occasionally asked to down-power but the grid system has changed, been a massive change to the point where we're rarely asked now to shut down.

But what this did was it gave us the opportunity to only do the thermal cycle of the plant once every 24 months versus once every 12 months. And then finally in 1992, we replaced our low pressure rotors.

So we have the original Westinghouse rotors. Industry experience had found some significant problems with that. We went to the monobloc design and replaced all those rotors.

CHAIR SIEBER: And the original were not monobloc?

MR. SWANK: That's correct.

CHAIR SIEBER: Okay.

MR. SWANK: Okay, and with that I'll turn it over to Don Gregoire.

MR. GREGOIRE: Good morning. I'd like to just briefly talk about our process, the license renewal process. We initially formed our project plans in 2006, pulled our team together in 2007.

We had a specific in-house staff overseeing this project. In 2009, we made sure that our application had some external independent peer reviews and then we submitted in January 2010.

Our license renewal team has been actively engaged with the NEI License Renewal Task Force and their working groups. We've participated in audits and inspections at other facilities as well as performed peer reviews for other facilities.

With regard to the -- next slide, please -- our scoping and screening, we utilized the guidance in NEI 95-10 and identified the in-scope structure, systems and components.

We identified our (a)(1), (2) and (3) in-scope components, mechanical components with mechanical boundary drawings. Next slide.

MEMBER STETKAR: Don, before you get a change there, I dug into a few of the scoping and screening decisions just to see if I could understand what was done. A couple questions.

I know that there was an RAI about the fire protection system in the turbine building which there was a question. And I know that the resolution of that RAI was to include the fire protection in the turbine building as in-scope.

I had a question about fire protection for the outdoor transformers. Is that also in-scope?

MR. GREGOIRE: Scott Wood, could you speak to that, Scott?

MR. WOOD: Scott Wood, Columbia Generating Station. Yes, the --

MEMBER STETKAR: It is, okay, thanks. Yes is good. We're short on time. I'll skip the other one because it's kind of detailed. Another question I had was your, I think it's called plant service water, TSW.

MR. ATKINSON: Turbine service water.

MEMBER STETKAR: Turbine service water. Okay, turbine service water, right. Parts of it are in-scope, the stuff that's in the reactor building are in-scope.

But the piping as I understand it from the pumps into the plant is not in-scope. Why is that? It's a normal cooling supply for reactor closed cooling water, is that correct?

MR. SWANK: That is correct.

MEMBER STETKAR: Okay. Why isn't the supply pipe from the pumps, you know, up to the RCC heat -- I know the piping right around the RCC heat exchangers is, but --

MR. LEE: My name is David Lee, Energy Northwest License Renewal Team. The plant service water is in-scope for (a)(2) functional. It provides the feed and bleed path during a loss or tornado event.

MEMBER STETKAR: And it is in-scope all the way from the pumps?

MR. LEE: From the pumps --

MEMBER STETKAR: It is? Okay, because the drawing, you know, we see things betwixt and between. The drawings I had didn't show it in-scope from the pumps until you got to the reactor building.

MR. LEE: It includes the pumps.

MEMBER STETKAR: Thank you.

CONSULTANT BARTON: Do you have anything else, John? Do you have anything else right now?

MEMBER STETKAR: No, not on scoping.

CONSULTANT BARTON: I'd like to ask you on like the fire protection. I noticed your components in the fire protection that are in-scope does not include either jockey pump, but for aging management -- I'm sorry.

The jockey pumps are not included in your Aging Management Program. Is there any reason for that? Your fire protection pumps are, but then you've

got two jockey pumps that I could not find were in the Aging Management Program.

MR. WOOD: Scott Wood, Energy Northwest. The jockey pumps are not required to perform a function of putting out the fire, they only are a convenience to keep from cycling water --

CHAIR SIEBER: Keep the pressure on.

MR. WOOD: So they just maintain pressure.

CONSULTANT BARTON: Also the system contains several tanks, and I couldn't find those listed as having Aging Management Programs.

MR. GREGOIRE: You're talking about the fire protection bladder tank?

CONSULTANT BARTON: Well, I didn't write down which one that is, but you've got Tank 3.7 or 1.10, FP-TK-110 and FP-TK-110 is not in-scope. Is that the bladder tank?

MR. GREGOIRE: FP-TK-110 is the bladder tank.

CONSULTANT BARTON: Okay.

MR. GREGOIRE: And it's within the scope of license renewal. MR. WOOD: Excuse me, sir, I have a correction to make. Scott Wood, Energy Northwest. We did later put the jockey pumps in-scope of license renewal. I spoke in error.

CONSULTANT BARTON: Thank you.

MR. TWOMEY: No, the bladder tank for FP-TK-110, it is in-scope but it screens out because we replace it.

CONSULTANT BARTON: Oh, okay, I got you. I understand.

MR. GREGOIRE: Okay, moving on, we did implement the Aging Management Review process as outlined in 10CFR Part 54 and NEI 95-10. Our application process considered GALL, Revision 1.

GALL Revision 2 came out in draft form sometime after we submitted our application and became finalized much later after our application was submitted.

CHAIR SIEBER: Have you upgraded your LRA to embrace the concepts in GALL 2?

MR. GREGOIRE: With regard to GALL 2, we have a number of RAIs from the staff that challenged us on getting in alignment with the GALL Rev 2 and so we have made a number of commitments and changes to our programs to recognize GALL 2.

CHAIR SIEBER: I sort of gathered that you're not fully consistent with GALL 2. Is that correct?

MR. GREGOIRE: We have not done a complete

full assessment of that document to ensure we are in complete alignment with it.

MR. TWOMEY: We did not do a line-by-line check.

CHAIR SIEBER: I'm sure during the staff's presentation you will give us an assessment of your opinion as to the degree to which the licensee's application of the combination of GALL 1 and GALL 2 is satisfaction to you.

MS. GALLOWAY: I can add something right now. What we did with Columbia as well as other applications we had in-house was take the operating experience that was captured in GALL Rev 2, which had been developing over time, and used that operating experience as opportunities to ask RAI.

So we asked RAIs, all the in-house applicants, that we felt were the most important changes that were going to be captured in GALL Rev 2. So yes, we do feel that on the important items that we have captured that with Columbia as suggested.

CHAIR SIEBER: Yes, now that's been the practice with a number of licensees within the last two years, I would say that it's sort of bits and pieces as you go along.

MS. GALLOWAY: Yes, last summer we did a

systematic check against all the in-house applicants against a 20 or so key changes that were being addressed and captured in GALL Rev 2.

CHAIR SIEBER: And this is what, about the 70th LRA?

MS. GALLOWAY: Well, we've already licensed for the 71, so yes.

CHAIR SIEBER: I lose count after awhile, but I presume the ones in the future will become 2 exclusively?

MS. GALLOWAY: Yes, we have the Limerick application which is a fairly recent one.

CHAIR SIEBER: Okay, thank you.

CONSULTANT BARTON: In your aging management, the demin water system, your description says it provides containment isolation and integrity in the system since intended function is safety related.

Yet the system also contains a storage tank, which I couldn't find it had any Aging Management Reviews of that storage tank. Is there a reason for that?

MR. GREGOIRE: We'll get back to you on that. Oh, wait a minute.

MR. LEE: David Lee, Energy Northwest

License Renewal Team. The storage tank is not credited for performing at (a)(1), (a)(2) or (a)(3) intended function. That is why it's not in-scope.

The only function for the demineralized water system is containment isolation boundary portions of piping that go into the containment and for portions, non-safety related portions of the system that are in-scope due to the spatial interaction in areas containing safety related equipment.

CONSULTANT BARTON: The reason I asked is your description in the application says system intended function is safety related.

MR. LEE: For the containment isolation portion. There's a portion of the piping that penetrates the containment vessel.

CONSULTANT BARTON: Okay, just that piping?

MR. LEE: Right.

MR. GREGOIRE: Next slide. So we are accrediting 55 Aging Management Programs, 35 already exist, 20 are new.

We have plans right now targeted to complete the majority of those new programs within the next couple years, incorporating or consider, take

into consideration operating experience and the development of it to make sure that we are creating programs that are effective at addressing aging management.

CHAIR SIEBER: What's the date that your current license expires?

MR. GREGOIRE: 2023.

CHAIR SIEBER: So we've got some time.

MR. GREGOIRE: Our commitments are no later than 2023, but our plans are much more aggressive in 2013.

CHAIR SIEBER: Yes, you will not succeed if you wait until the last minute.

MR. GREGOIRE: That's right. No disagreement --

CHAIR SIEBER: Advance, you adopt a new program, which still gives you a lot of time.

MR. GREGOIRE: With regard to Time-Limited Aging analyses, we've identified a number of disposition in, in accordance with the NUREG and NEI 95-10, and characterized them in accordance with 54.21.

There are a couple exceptions that we failed to do that we'll talk about in the open items. If you don't mind I'll just defer until then. Next

slide.

We have a number of commitments, 71 commitments we've made. However, the majority of these are related to our existing and new programs. We have individual ones for each program.

We have a commitment tracking process that we use to ensure that we carry out our commitments as we communicated them to the staff, and we'll be relying on that to drive home all these commitments.

MR. ATKINSON: I guess additionally I'd offer, senior management is quite interested in the implementation both the earlier items and then the follow-on to stick to the plan.

So there will be multiple opportunities for us to track and weigh in on that programming and ensure the resources and commitments are met.

MR. GREGOIRE: With regard to implementation, we fully understand that there's been challenges in the industry with implementation. We plan to be engaged.

We know there's a lot of lessons learned. We will be involved with the benchmarking other sites. We'll continue to participate with the NEI License Renewal Implementation working group.

We expect to carry out self-assessments

and audits during this preparation period prior to the PEO, Period of Extended Operation. And we are in the development process for having that project map laid out with the expectation to have that somewhat completed early next year.

Next slide. With that I'd like to transition to --

MEMBER SHACK: Before you get, let me just ask a quick question on that. I looked through your first amendment to the License Renewal Application, your commitment 39.

And you removed the commitment to enhance the material and handling system inspection program to look for corrosion. Why did you do that?

MR. TWOMEY: Because we implemented it. The program owner saw the benefit into implementing that enhancement right away, so he took the initiative and upgraded all the program documents and they're doing that now.

MEMBER SHACK: Okay.

MR. GREGOIRE: I'd like to move to the open items. Now with respect to concerns expressed by the NRC, I do want to say that of these six we've already provided two responses, albeit they were here in just the last month or two so they didn't have

opportunity to get into the Safety Evaluation Report consideration.

The other four, we fully intend to have those responses provided by next month if not sooner. We have some sitting on my desk that'll be out the door here very shortly.

But let's go ahead and go into the six open items. The first one is related to the high voltage porcelain insulators, and Abbas, if you would just go to Slide 35.

Now the concern is with the insulators that are out at the Ashe Substation. You can see on the picture there that the Ashe Substation, it's approximately three-quarters of a mile north of our cooling towers.

We've had concerns with drift from the cooling towers affecting insulators in our transformer yard. We initially did some studies due to an event we had back in the '80s, '90s time frame, early '90s time frame.

And that those studies demonstrated that the drift was somewhat limited to just right around the transformer yard and it really dropped off if you got a little bit north of the yard.

And so we initially didn't include the

insulators in the Ashe Substation in our program. When asked to provide the data that supported the evaluations we had some difficulty with that and it really wasn't a major issue for us to go ahead and include the Ashe insulators in our program.

As a matter of fact, this last outage we went and tested the insulators for the accumulation buildup on it and determined that it was very minimal accumulation.

We have also instituted a PM to evaluate these once every eight years for buildup to determine if they need cleaning. And that's consistent with the Bonneville Power Administration, who runs the switchyard there, as far as their cleaning process.

CONSULTANT BARTON: Let me ask you a question about your switchyard. Since you really don't do the work and it's done by some T&D people, how do you control the work as plan operators?

MR. ATKINSON: We essentially treat, the work is primarily done by Bonneville Power Administration under contract to us. We treat them as a contractor and provide technical oversight for the work conducted in the transformer yard.

So I mean we're out there providing that oversight.

CONSULTANT BARTON: And there's a requirement that they communicate with you before they go in the yard to do any work or any, you've got that all written down and --

MR. ATKINSON: We have a Memorandum of Understanding and we do control that work out in the yard. And frankly, it's come from some lessons learned in dealing with that.

CONSULTANT BARTON: That's why I asked.

MR. ATKINSON: Yes, sir.

CONSULTANT BARTON: Okay.

MEMBER STETKAR: Dale, you hopefully weren't being very careful when you said transformer yard. What about the Ashe Substation?

MR. ATKINSON: The Ashe Substation is actually operated by the Bonneville Power Administration. So again we have a very good working relationship on that.

From a practical point of view, you know, this issue around the insulator fouling if you will, you know, the mechanism, you look at that picture you've got the cooling towers right in the middle. And for those of you that were out there it was a windy day.

MEMBER STETKAR: You know, you put the

insulators in-scope so I'm a little less concerned about insulators, that I'm a little more concerned about the fact that that is the connection for one of your accredited offsite power supplies out there to the, within the breakout.

I didn't have an electrical drawing. For some reason I couldn't find an electrical drawing in your FSAR so I'm kind of at a loss.

But I'm assuming that the circuit breakers are out there at that substation, otherwise we wouldn't be talking about that substation and therefore maintenance of those circuit breakers, testing of those circuit breakers.

And since -- is it an overhead line that comes into the site?

MR. SWANK: It is, yes.

MEMBER STETKAR: And the line itself are under the auspices now of Bonneville Power authority.

So the question is, you know, extending from your transformer yard out, how do you control, you know, maintenance and testing of those circuit breakers, maintenance of the line, you know, above and beyond just the insulators that we're talking about?

MR. SWANK: Brian, could you help us with those questions after identifying yourself? Introduce

yourself.

MR. ADAMI: Technical Services Manager in Sub. The scope of the work that is done at Ashe Substation is coordinated with Columbia. Every time we go into a manage group we're in discussions with them what the scope is.

We strategize with them. In fact, maintenance and upgrades, we used to have French air blast Cogenel breakers in the Ashe Substation.

We have upgraded to SF6, and so the installation, the testing of these devices, you know, are things that we talk about and we have an agreement that requires our involvement with them.

CONSULTANT BARTON: And there is an agreement?

MR. ADAMI: There is an agreement.

MEMBER STETKAR: Just talking about things isn't quite the same.

MR. SWANK: Right, but we -

(Simultaneous speaking.)

MR. SWANK: -- and make sure there's a clear understanding of who owns what and how it's controlled.

MEMBER STETKAR: And Brian, just because there were several people speaking, so we have it for

the record, can you say your name again?

MR. ADAMI: Brian Adami, Tech Services Manager.

MEMBER STETKAR: Thank you.

CHAIR SIEBER: And this is the standard NERC agreement that you're referring to?

MR. GREGOIRE: No, I believe this is separate situation. NERC is interface requirements that we have for NUC-001, but there is a working agreement for that, that were in place before NERC.

CHAIR SIEBER: Correct, okay.

MEMBER SKILLMAN: I'm Dick Skillman. I would like to build on John Barton's question, please. When asked about controlling work in the transformer yard the answer was there's a Memorandum of Understanding and it's controlled, I'm assuming through your work control at the station?

MR. SWANK: That's correct.

MEMBER SKILLMAN: Please describe how that same control is conducted at the substation, Ashe Substation.

MR. SWANK: We'll let Brian talk about it in detail, but understand that there is a difference because we control physical access in our transformer yard.

So when you get to the Ashe Substation it is different, and that's done through the --

MEMBER SKILLMAN: MOA.

MR. SWANK: Exactly. And so --

MEMBER SKILLMAN: But though, please let me explain why that's the question. From an operator in the control room, if my offsite power is coming through Ashe I'm very interested in assuring that Ashe is fit for duty and I don't want people in there doing stuff that I don't know about.

MR. SWANK: Right.

MEMBER SKILLMAN: Hence my question, how's the control of work conducted for Ashe?

MR. ADAMI: Brian Adami, Tech Services Manager. BPA has their own requirements as far as fitness for duty, security, access into the substation.

Operation of the equipment over at Ashe Substation is anything that's going to affect the operation at Columbia Generating Station is coordinated with us.

In fact, if we are going to go into a 24-hour run with a diesel generator and going to be connected to the grid for that amount of time, we have requirements in our procedure to coordinate with them.

And if there's weather situations that draw concerns for both of us in terms of grid reliability, the test may be rescheduled. I'll say that we go into discussions and have agreements on how to protect offsite power.

We will ask them and they will agree to not work on certain equipment if we're in a situation that has any kind of vulnerability from a risk standpoint. And so it's a combined mutual situation as governed by our agreement with them.

MEMBER SKILLMAN: Thank you.

MR. GREGOIRE: If there are no further questions in the insulators we'll move on to the next open item. So Abbas, if you could go to Slide 26.

I should note one last thing with the insulators. We did provide a response already to the staff on August the 18th with that regard to inclusion of those insulators.

The next open item has to deal with operating experience. There was concern raised and expressed with regard to how we as the licensee would be treating future operating experience and using that to shape or develop new Aging Management Programs.

To date we have not been clear enough and we fully expect to, we've had a number of discussions

with the staff to make sure that we provide the appropriate clarity.

But let me just be clear, I guess I'm repeating myself. Let me be clear on this issue. We are going to be laying out exactly how we're going to be using operating experience.

We currently have an operating experience program owner with the company who manages that. He does that full time for the company. We have a procedures processes.

We rely on an individual, or our License Renewal Team participates in the daily or the weekly review of operating experience to assess the impact of, you know, whether we need to evaluate it further.

We fully intend to continue to use this program. Currently we receive operating experience from both INPO as well as the NRC that we use and we evaluate some of them.

Recently, Information Notice 2011-04 we've evaluated for effects on our Aging Management Programs. There's a number of them out there. So we are actively doing that right now.

When we develop our new programs we will, part of the development of those programs is to take into consideration operating experience that is out

there so that we ensure that we're taking those considerations into play when we're developed a program.

But we are evaluating, and even when the next version of GALL comes out, should it come out a Rev 3, that it will be an operating experience program and we'll be considering that as well.

Our response to the staff we expect will be provided, it will be provided next month to close this item.

MEMBER SKILLMAN: If I could, please. I'm Dick Skillman. My question is two-fold. To whom does your OE program owner report? And at your station on a scale of one to ten, one being not important and ten being very important, how is the OE program regarded, please?

MR. GREGOIRE: Well, I would say it ranks up there as a ten as being very important and we do take it into consideration. The OE program reports to our organizational effectiveness.

You know, it evaluates not only external operating experience but as well as internal experience, and we utilize that information to shape the organization.

Now we've had a number of PI&R inspections

that have evaluated us. We've, being of very few issues that have been identified.

MEMBER SKILLMAN: Thank you.

MR. GREGOIRE: So in closing with this one, we fully plan to have that submittal to the staff no later than next month to hopefully close this item with the staff.

The next open item is regarding upper-shelf energy requests for technical data associated with the determination of our initial transverse upper-shelf energy associated with certain nozzle forgings.

And Abbas, if you could, let's go to Slide 61. So the nozzles we're speaking about are the N12 instrument nozzles. They're located in the beltline of the reactor vessel.

We have provided the initial information to the staff with regard to the initial upper-shelf energy, 62 foot-pounds, as well as the copper content of 0.27 percent.

Since then the staff has asked us for the data to support it. We have obtained the data. This is a letter that I just reviewed this week and it should be submitted to the NRC no later than next month.

CHAIR SIEBER: What's the range of diameters of those nozzles?

MR. GREGOIRE: I'll ask John Sisk.

CHAIR SIEBER: They look like six to twelve, six to twelve inches.

MR. SISK: John Sisk, Principal Engineer and program owner. And your question was, what is the diameter of the -- the outside diameter of the water level instrument nozzles are 3.32 inches.

CHAIR SIEBER: And that's the only ones that you're concerned with?

MR. SISK: There are four nozzles and they are all the same size, yes.

CHAIR SIEBER: So they're not large LOCA points.

MR. SISK: That's correct.

CHAIR SIEBER: Okay, thank you.

MR. GREGOIRE: So again, the Request For Information on technical data, we've just reviewed it and we plan to be submitting that here very shortly.

MEMBER SHACK: Is the database that you have comparable to the one that you supplied for the Class 2 forgings or smaller?

MR. GREGOIRE: I'll have to refer to John Sisk again. John?

MR. SISK: John Sisk, Principal Engineer and program owner. And your question was with regard to the --

MEMBER SHACK: I assume you're supplying the data, but I mean you gave them a number before and they asked for the basis of that. And you've done that before for the Class 2 forgings and they found that the amount of data was acceptable.

I just wondered if you had a comparable amount of data for the Class 1 forgings.

MR. SISK: It is a comparable number of data points.

MEMBER SHACK: Thank you.

MR. GREGOIRE: Any more questions before John Sisk? Thank you. So again like I said, we will be providing that here shortly.

The next open item, if you go to Slide 28, Abbas. This open item is related to metal fatigue and the concerns for assessing other limiting locations. We have received, this has taken us some time to get through this.

We have looked at other locations. They're listed in our Table 4.3.3 and 4.3.5 of our application. Through the evaluations that we've done, we've just completed them, all of the other locations

are less than 1.0, the ASME criteria.

So we will be submitting that and it should be going to the staff no later than November.

The next open item is associated with lower core plate rim hold-down bolts. Now we notified the staff in June 29, that we did not have wedges in our vessel.

And we had communicated that we would be treating the core plate rim hold-down bolts with a TLAA or we would be installing wedges at least no later than two years prior to the period of extended operation.

We have done assessments for the current license, but with regard to the period of extended operation we will do one of those two things. We will either complete that TLAA or install the wedges.

However, the staff had asked us to be more specific on what characterization of TLAA, 54.21© characterization, so we will be more specific and we'll also submit AMR line item associated with this.

Again we expect to submit that information no later than November.

MEMBER STETKAR: Don, you mentioned you did assessments for the current licensing. Has that all been resolved with the staff or is that an ongoing

--

MR. GREGOIRE: There is an ongoing question. We need to provide them the information and we are very comfortable with our analysis that supports our current license basis.

MEMBER STETKAR: Thank you.

MR. GREGOIRE: And with regards to the last open item, I want to point out this was a response we provided just a few weeks ago to the staff.

There was a concern about the application of, or a TLAA application for our cranes, polar cranes specifically.

CONSULTANT BARTON: You don't call this a polar crane, do you?

MR. GREGOIRE: We do not have a polar crane. We don't have a dome or, we have an overhead crane. We have actually 15 in-scope cranes and hoists and we will, you know, consider a TLAA for those 15 in-scope.

They do remain valid through the end of the period of extended operation. And again like I said, we had closed on, or we provided the response to the staff just a few weeks ago.

So in summary of the six open items, two

of them we've already provided the responses. The other four are very close to being submitted out to the staff.

We hope that there won't be any challenges for meeting the future dates for license renewal. We think we've pretty much closed the loop on these but we'll try to address any concerns the staff may have in a timely manner.

CHAIR SIEBER: Is your overhead crane that you use during refueling, is that a single-failure proof crane?

MR. TWOMEY: It is It meets all the requirements of NUREG-0612.

CHAIR SIEBER: Okay, heavy loads.

MR. TWOMEY: It's heavy loads, that's correct.

CHAIR SIEBER: Thank you.

MR. GREGOIRE: With that I will turn it back over to Dale Atkinson.

MR. MOSTALA: There is some of the functions that David Lee would like to correct. David?

MR. LEE: David Lee, Energy Northwest License Renewal Team. Mr. Chairman, I'd like to issue a correction to an earlier statement that I had

stated.

CHAIR SIEBER: Okay.

MR. LEE: In regards to his question, he was asking about the plant service water system not the plant makeup water system.

MEMBER STETKAR: That is correct.

MR. LEE: The plant service water system is not credited for (a)(1) function. Therefore, the portions that are only in-scope are due to portions accredited for (a)(2) spatial.

MEMBER STETKAR: Okay, plant service water, acronym TSW so we're real clear, provides cooling for the RCC heat exchangers. Is that correct?

MR. SWANK: Just for clarity, it does provide the normal quote "cooling source." We can cool the heat exchangers with our safety related service water system.

MEMBER STETKAR: Okay, I didn't know that. Thank you. That resolves that concern, thank you.

MR. GREGOIRE: I think we have a couple of closures on some items.

MR. LASALLE: Just real quickly, John LaSalle, coat programs. There was a question about the coatings that we use in the suppression pool. And the coating's an epoxy.

The inspection is a 360-degree diver visual each outage, and a minimum of 25 percent of that each outage is a close-up visual, meaning within three feet.

And then any identified areas of degradation, they're followed up on subsequent outages and are identified.

CHAIR SIEBER: Have you seen any areas of degradation in the past?

MR. LASALLE: Yes, we have.

CHAIR SIEBER: And how do you repair that of do you just monitor it?

MR. LASALLE: They've been monitoring it and we have yet to do repairs on any coatings.

MEMBER SHACK: These indications, do they number in the tens, the hundreds?

MR. RICHTER: Typically we measure them by square foot. Steve Richter, Code Programs. We measure them by square footage and typically they're on square inches type, and then we track, we have a limit of how much we would allow in terms of square footage.

MEMBER SHACK: How many square inches are there?

MR. RICHTER: How many square inches? I

can get back to you on that. I can tell you total we have under 50 square foot of damage or degraded coatings. Would you like a more exact number?

MEMBER SHACK: No, that's close enough.

CHAIR SIEBER: Any further questions?

CONSULTANT BARTON: I've got a bunch of them. How tight do you want to be on your 10 o'clock break?

CHAIR SIEBER: Yes, watch it.

CONSULTANT BARTON: Watch it, okay. Your tank inspection program, diesel fuel tank. I couldn't find evidence that you ever looked at it. Have you ever inspected diesel tanks for corrosion?

MR. MOSTALA: Carolyn Beaudry can answer that question.

MS. BEAUDRY: I'm Carolyn Beaudry, the buried piping and tanks program owner. And our diesel fuel oil tanks, we have three of them, and they are buried underneath our diesel generator building. And we do a, every ten years we do UT on the internals of the tanks.

CONSULTANT BARTON: I didn't get you, you do what?

MS. BEAUDRY: We do ultrasonic testing on the inside of the tanks every ten years.

CONSULTANT BARTON: Have you found any degradation in the tanks?

MS. BEAUDRY: No. Based on our 2005 inspection of all three tanks, the greatest amount of, through the period of extended operation the greatest amount of degradation we would have seen would have been 0.02 and our corrosion allowance is 0.18.

CONSULTANT BARTON: Okay, thank you.

MS. BEAUDRY: Thanks.

CONSULTANT BARTON: Do you also have -- oh, you still had a question on it?

MEMBER SHACK: Just a question. I mean how much of the tank surface do you actually cover with that UT inspection?

MS. BEAUDRY: I'm not sure. I can get back to you on that.

CONSULTANT BARTON: You also have above ground tanks?

MS. BEAUDRY: Yes, we do.

CONSULTANT BARTON: I mean just stay with your audit, okay.

MS. BEAUDRY: Oh, I'm sorry, I don't have it.

CONSULTANT BARTON: Oh, okay. Condensate storage tank, fabricated steel located outdoors, are

these tanks insulated or not?

MR. TWOMEY: They are not.

CONSULTANT BARTON: Not insulated.

MR. TWOMEY: They are coated.

CONSULTANT BARTON: They are coated, honestly.

MR. TWOMEY: Yes.

CONSULTANT BARTON: Have you ever found any corrosion on the outside of the tank surface in your inspections? Forget about the seal thing because I'll get to that next, but the tank surface itself?

MR. TWOMEY: Not on the tank surface.

CONSULTANT BARTON: All right. The interface of the tank to the foundation, was that supposed to have a seal originally?

MR. TWOMEY: No. The design drawings never called out for a seal.

CONSULTANT BARTON: All right, so you did find some corrosion there and that's been corrected?

MR. TWOMEY: That's corrected and it's been sealed.

CONSULTANT BARTON: Okay, and it's been sealed.

MEMBER STETKAR: John?

CONSULTANT BARTON: Yes.

MEMBER STETKAR: Did you have more on CST as long as you brought it up?

CONSULTANT BARTON: On the --

MEMBER STETKAR: The condensate storage tank.

CONSULTANT BARTON: Yes.

MEMBER STETKAR: You do have more?

CONSULTANT BARTON: Yes, the issue I still have on this is, you do inspections of that area and apparently that corrosion has been going on, and it wasn't really identified and put in your corrective action system.

And the system engineer has looked at that tank and didn't enter it as an item in corrective action.

So my question here is, you know, do you have confidence in how effective is your corrective action system when the system engineer, who I take should be a responsible guy for a system and know what's going on in a system, finds an item, a discrepancy, does not enter it in the corrective action system?

So I question, you know, how serious is your corrective action system? How well does it work and, you know, are you satisfied with it or you've got

to fix it?

MR. TWOMEY: Well, I can answer that specific more than Adami, I guess in total. But you ask if this engineer was aware of it, made the decision up front that the cost, it was a limited corrosion and it was, again this corrosion was on the tank if you will, the lip where the hold-down bolts are and it was outside the bolt circle.

So he had made the decision that well, that loss of material doesn't affect the, you know, the integrity of the hold-down bolts. Therefore, you know, I'll watch it.

CONSULTANT BARTON: Until it got into the bolt area and couldn't --

MR. TWOMEY: Right, and --

CONSULTANT BARTON: I don't get that, but okay.

MR. TWOMEY: No, no, and then we coat, you know, the corrosion. And we've just done the training, a recent training, where the expectation is you don't make that decision up front.

You document it in the corrective action process and then you document that decision. You're right. That was a shortcoming.

CONSULTANT BARTON: Thank you.

MR. GREGOIRE: Well, and we provided training to our engineering staff with regard to identification and documentation of aging issues.

And we demonstrate, through our outage we've had quite a number of CRs that have been generated on corrosion, on wear, on cracks. So the message has been sent and they do understand it.

CONSULTANT BARTON: Yes, because I noted again, NRC had an issue on their inspection that it appeared that training wasn't very effective in Aging Management Program issues, et cetera.

MR. GREGOIRE: So we have currently trained all our engineering staff. We have plans for training our maintenance and operations staff. We are working on establishing recurring training for all our engineering staff on the aging concerns, identification and addressing aging concerns.

MR. ATKINSON: This will be managed consistent with the systematic approach to training. So that's that the Training Advisory Group reviews it, makes sure that the periodicity and depth of training is adequate to maintain their required performance.

CONSULTANT BARTON: John, did you still have something?

MEMBER STETKAR: Yes, just a quick one

because we're getting short on time here. On the CST I need some clarification, because as I read the SER and the inspection reports, the SER says in a response to RAI v.2.1-1 it was noted that ultrasonic thickness measurements of the tank bottoms, this is the condensate storage tank, are performed every ten years.

The inspection report seems to indicate, the staff's inspection report, that the tank bottom thickness has never been measured. Those two pieces of information seem in conflict.

Have you ever measured the thickness of the bottoms of the condensate storage tanks?

MR. TWOMEY: We have not. We have committed to do that and we've only done a visual from the --

MEMBER STETKAR: Yes, I saw the commitment. That's what brought up this difference between the RAI response and the commitment and the inspection observations. So okay, thank you.

CONSULTANT BARTON: Inaccessible medium-voltage cable is not subject to 50-49. You've experienced water intrusion in a couple manholes adjacent to the cooling towers but never identified the source of the water. Have you finally figured

that one out?

MR. ADAMI: Brian Adami, Tech Services Manager. I'll address that question and cover both manhole and the cable issue. So the cables in these manholes they are designed for the environment in which they are installed.

And they're operating normally and we're maintaining these manholes dry. We're testing these cables in the next refueling outage. So and the best thing for these cables to remain healthy is for them to remain in a dry environment and so let me tell you what we're doing about that.

Thanks for bringing that slide up. If you can see on the diagram where he has the mouse, there's our six cooling towers in the middle. There's the circ water pumphouse.

And then to the north, there's our transformer yard, and the color coding on this slide is such that the red dots are manholes that we have found standing water in.

The green ones were inspected and they were found dry. Any manholes that we did find water in we immediately pumped the water out and we've reconditioned the French drains in these manholes so that they drain.

We did find silt in them that was preventing their drainage. They are routinely inspected now for water, also for the continuing good condition of those French drains.

Now furthermore, yes, we have found the source of water for each of these locations identified in red there. So for E7 down by the cooling towers, the source of water was the drain water and surface water from the cooling tower.

On E8, that water was found, the water that was found to fill that communicates from our circ water pumphouse basement.

We found that when level is raised in that basement to allow the circ water pump to start, when that level is high that water communicates to that manhole. And that was recently discovered on our start up following our last refueling outage.

CONSULTANT BARTON: Is there a fix to that?

MR. ADAMI: Since it was just entered in our corrective action program, we were looking at that evaluating whether it should be administratively controlled where we are going too high, higher than necessary to bring the head for the pump start, or if there's something like plug in the conduit that would

be the preferred fix for that. So it's being evaluated currently.

CONSULTANT BARTON: Thank you.

MR. ATKINSON: But essentially what Brian is saying is that we will either close that communication path or control the water level such that it never reaches a point of communication, because it is our intent to not continue to allow that water source to enter that manhole.

MR. ADAMI: That is correct.

CHAIR SIEBER: Now you said that you either have tested or will test the cables that were exposed to water intrusion. What kind of tests will you perform to ensure the cable integrity is maintained?

MR. ADAMI: Pan-delta tests on the medium-voltage cable and also on our 480 volt, we're committed to meggering those cables.

CHAIR SIEBER: Okay, but you're limiting it to a megger test?

MR. ADAMI: That is correct.

CHAIR SIEBER: Okay.

MR. SWANK: And these are normally energized cables.

CHAIR SIEBER: Okay.

MR. MOSTALA: Also, Mr. Chairman, there is a follow-up question that Jim Hamlen would like to address on the non-seg bus.

MR. HAMLEN: Yes, my name is Jim Hamlen, and I'd like to answer Mr. Stetkar's question about the 6.9 kV bus which failed. That bus is not in-scope. It does not perform a safety related function.

It supports no (a)(3) regulated event, and the only cables in the vicinity were fail-safe cables, so there's no (a)(2) non-safety, affecting safety consideration for that bus.

CHAIR SIEBER: What's a fail-safe cable? You can ground, you can short, you can open, and each of those has an effect on safety related equipment.

Have you analyzed all three potential failure modes and its effect as far as spurious operations, failure to operate when required for an upstream effect on the power supply itself from the failures?

In other words, circuit breakers tripping, protective actions. Could you --

MR. HAMLEN: I don't know if that evaluation's been done but we'll find out.

CHAIR SIEBER: I think that would be a wise evaluation to support. Find out what's in the

room, look at the failure effects in analysis for cables that are reasonably affected by a failure of that cable or other cables, not in-scope cables, and that can give you some assurance as to whether the plant safety functions can be performed upon --

MR. TWOMEY: Well, just understand that the location of that bus is a non-safety related area of the plant. That is our turbine building.

CHAIR SIEBER: Nothing in that room is --

MR. TWOMEY: There's nothing in that area of the plant that performs an (a)(1) function.

MEMBER STETKAR: The concern is larger than that particular bus section. I think we all understand that.

(Simultaneous speaking.)

MEMBER STETKAR: Have you looked at metal-enclosed bus failures throughout the plant and looked at potential interactions with, in-scope not safety related but in-scope cables and switch gear?

CONSULTANT BARTON: I've got one more, Jack.

CHAIR SIEBER: All right.

CONSULTANT BARTON: Emergency diesel generator starting error system has a history of routinely failing the past dew point surveillances.

And you guys put together a design change which you didn't implement, instead you decided to change out desiccant more frequently and that didn't solve the problem.

Is this still an issue at the site or have you found a way to get them over that problem that's been going on for awhile?

MR. MOSTALA: Scott would you address that question, or John.

MR. LASALLE: I'll go ahead and answer that. John LaSalle, Code Programs. The problem was basically a maintenance issue of the air desiccant. And we basically have corrected that by --

CONSULTANT BARTON: What did you do?

MR. LASALLE: Increasing maintenance frequency in our desiccant dryers.

CHAIR SIEBER: Did you use a purger with a heater?

MR. LASALLE: Well, actually they're physically going in and changing out the desiccant frequently so you don't have channeling and you don't lose your surface area.

CONSULTANT BARTON: So you now change, you fixed this to change the desiccant out more frequently?

MR. LASALLE: That's correct. And we've been maintaining a dew point of, it's minus 19 in the air.

CONSULTANT BARTON: Okay.

MR. LASALLE: Could I make a quick correction on the record for the coatings of the wetwell? We have ten locations that have been repaired and there are ten that are being monitored.

CHAIR SIEBER: Any more, John?

CONSULTANT BARTON: I got one on miscellaneous waste and radioactive drain system. The floor drains are now going to 55-gallon drums. Is that the way you intend to continue this or, it sounds like a Mickey Mouse kind of operation you've got going now.

MR. SWANK: I'm not aware that we're doing that.

CONSULTANT BARTON: Well, it's in your application I believe. Miscellaneous waste, radioactive system equipment and floor drains collect borated water from the Standby Liquid Control System, direct this water to 55-gallon drums in the reactor building.

MR. MOSTALA: Mot Hedges would answer that.

MR. HEDGES: Mot Hedges, plant chemistry. That is specifically drains from around our Standby Liquid Control tank.

When we test that there is some borated water that ends up in the test tank and that actually drains down to a plant drain, because we do not want the boron to go down and be treated with the regular waste because otherwise the boron would end up in the reactor.

So that specific waste is collected in 55-gallon drums and processed separately.

CONSULTANT BARTON: So that's your permanent planned installation, is to --

MR. HEDGES: That's correct. That's the way the plant was designed to operate.

CONSULTANT BARTON: Okay.

MEMBER STETKAR: Jack, if you'll indulge me I've got one last one since you mentioned drains.

CHAIR SIEBER: Sure. We actually have all day.

MEMBER STETKAR: I know I certainly do but other people have lives.

CHAIR SIEBER: We don't need lunch.

MEMBER STETKAR: There was an event that was documented, it came up in the SER and RAIs in the

context of fire barriers. It was a water leak, and I'm searching for my notes here because I have too many notes.

There's a water leak in the radwaste building cable spreading room. Fifteen to twenty gallons I think that was characterized that apparently dripped down through cracks in the floor and got into the Division 2 switchgear room down below and caused some problems.

And fine, I mean, you know, you made a commitment, you sealed the floor and all that kind of stuff. My question was, does that cable spreading room have a sprinkler system in it?

Is it protected? Because the leakage was characterized as a drain line from a fire protection system. And so the first question is, does it have a sprinkler system in that room?

MR. TWOMEY: Yes, it does.

MEMBER STETKAR: It does, okay. The second question, if it's got a sprinkler system in the room does the room have floor drains in it?

MR. TWOMEY: Yes, it does.

MEMBER STETKAR: Okay. The 15 to 20 gallons didn't make it to a floor drain then?

MR. TWOMEY: That's correct. Because the

location where it was, and specifically what that was it was a construction joint in that floor, basically a cold joint.

And we recognize that of course water will find the path of least resistance and the 15 to 20 gallons --

(Simultaneous speaking.)

MR. TWOMEY: -- before it could get through a floor drain it went down through there and now we treat those as part of our fire barrier.

MEMBER STETKAR: Great, thanks. I was a little more concerned about floor drains, because if it didn't have floor drains in it the water, water does flow downhill.

MR. TWOMEY: I understand your concern, yes.

MEMBER STETKAR: Thanks.

CHAIR SIEBER: Any further questions from members? John?

CONSULTANT BARTON: I'm all right.

CHAIR SIEBER: Okay, go ahead, closing remarks.

MR. ATKINSON: All right. Mr. Chairman and members of the ACRS subcommittee, I do appreciate the opportunity to bring the team here and discuss

Columbia Generating Station and the License Renewal Application.

We are confident that we have the responses necessary to meet the NRC staff's needs or requirements to close the open items and my hope is that we can do that on a timely and still supports the schedule.

I did want to also communicate that in senior management we do have periodic reviews. So for the implementation of the programs we'll provide detailed oversight of that.

I mean I'd like to recognize a lot of the hard work of folks both on the Energy Northwest team and also particularly NRC staff. This is a lot of work to get through all the scoping and evaluation of that and I really do appreciate it.

We at Energy Northwest understand our responsibility and are committed to the long term safe operation of Columbia.

With that, Mr. Chairman, I will turn it back to you. I guess one thing to be clear on, my understanding is we still have a question to get back to you on perhaps after the break, with regards to a fail-safe discussion with cables, is that correct?

CHAIR SIEBER: Okay.

MR. ATKINSON: Okay, we'll -- excuse me, are you ready to discuss that item?

MS. BEAUDRY: No, a different item.

MR. ATKINSON: Oh, we've got one more follow-up, okay.

MR. BEAUDRY: Carolyn Beaudry, buried piping program owner. The diesel fuel oil tanks are UTed with a grid system and there are 164 points on the diesel fuel oil. Thank you.

CONSULTANT BARTON: Thank you.

CHAIR SIEBER: No further questions? Thank you very much for your presentation and your responsiveness to our questions.

And we'll now take a break and we'll resume at 25 minutes to 11:00 according to my watch as opposed to that.

(Whereupon, the foregoing matter went off the record at 10:18 a.m. and resumed at 10:35 a.m.)

CHAIR SIEBER: I think we're ready to resume, but before we begin with the staff the applicant would like to respond to items.

MR. HAMLEN: Yes, my name is Jim Hamlen, and I'd like to provide additional information on your question with respect to the bus failure and evaluation of cables.

There was an evaluation done to address the issue with open circuits, with hot shorts and shorts to ground. In the turbine building at Columbia, the only circuits with a safety function are the RPS and MSIV logic circuits, and those were determined to be fail-safe.

If the circuit was opened or damaged the components would be in their safe position, and the only non-segregated bus, safety or non-safety, is in the turbine building and then outside in the transformer yard.

CHAIR SIEBER: Okay, you said open or grounded, what about shorts?

MR. HAMLEN: That is included as well.

CHAIR SIEBER: Okay.

MEMBER STETKAR: And all of those conditions, for example, MSIVs, will close?

MR. HAMLEN: Yes.

MR. SWANK: And one last correction.

CHAIR SIEBER: Okay.

MR. SWANK: Dave Swank, Energy Northwest. I needed to correct a statement that I made. The RCC heat exchangers, Reactor Closed Cooling heat exchangers are normally cooled by the plant service water system and they are only cooled by the plant

service water system.

The primary load for Reactor Closed Cooling is the spent fuel pool cooling system and its heat exchangers. Those heat exchangers can be cooled by safety-grade service water.

MEMBER STETKAR: The RCC also cools the recirc pump seals, is that correct?

MR. SWANK: That is correct. It also provides containment cooling. And so on the loss of Reactor Closed Cooling we would be forced to shut down the unit.

MEMBER STETKAR: Does that mean on a loss of plant service water you'll lose containment cooling and recirc pump seal cooling?

MR. SWANK: That's correct.

MEMBER STETKAR: Okay. I guess I'm still a little bit curious why the TSW supply line isn't in-scope.

CHAIR SIEBER: Okay.

MS. GALLOWAY: The staff appreciates the opportunity to be able to discuss review to date as well as provide a status of the open items that remain.

I'd like to introduce the staff making our presentation this morning. Arthur Cunanan is the

project manager responsible for coordinating all at ACRS that will be associated with the review.

Tony Gardner is a member of our technical staff and he will be assisting Arthur in moving through the presentation.

Allen Hiser is our senior level advisor in the Division of License Renewal. I know the committee is well familiar with Dr. Hiser. Matt Homiack is a mechanical engineer in our Division who will be talking about operating experience.

And then we've had the opportunity to be introduced to Greg Pick earlier, the senior inspector who will talk about the inspection today at Columbia.

CHAIR SIEBER: Okay, thank you. Arthur?

MR. CUNANAN: Good morning, Chairman, and members of the ACRS staff. My name is Arthur Cunanan and I'm the Project Manager for Columbia Generating Station License Renewal Application.

I'm here to discuss the staff's review of the Columbia License Renewal Application as documented in the Safety Evaluation Report. Melanie has made introduction on who's at the table.

Also seated are members of the audience from the technical staff who participated in the review of the License Renewal Application or at the

audits conducted at the plant.

As mentioned before, Greg Pick from Region IV is on the phone. Greg, can you hear me?

MR. PICK: I am on the phone and yes, I can hear you, Arthur, thank you. This is Greg Pick.

MR. CUNANAN: Thank you, Greg, I can hear you. Greg Pick will be available throughout this presentation and will be presenting the results of the license renewal inspection.

CHAIR SIEBER: Okay, great.

MR. CUNANAN: Next slide. Here is an outline of today's presentation. Next slide. This slide shows an overview of Columbia Generating Station. The applicant has covered most of the points presented in the slide.

The staff conducted audits and inspections for the License Renewal Application during the period shown on this slide. In addition, Region IV conducted its license renewal inspection on October 18 through November 4 of 2010. Those inspection results will be presented shortly.

CHAIR SIEBER: I have a question on the environmental report. Columbia River flows from north to south basically from Canada. Well, it starts in Montana and makes a big loop.

As far as plant safety is concerned, I presume the Columbia River has dams both upstream and downstream of the plant.

MR. CUNANAN: Yes.

CHAIR SIEBER: Have those been examined as far as dam failure and the effect on the ultimate water supply to the plant in case of an accident condition?

MR. CUNANAN: The analysis has been conducted and it's presented in the UFSAR on Columbia. And from reading its analysis it stated that the seismic Category 1 structures are located in the maximum postulated flood elevation that is designed to withstand the static and dynamic forces which can result in a flood, flood due to the breach of the Grand Coulee Dam which is the maximum postulated -

CHAIR SIEBER: That's the major dam failure that would affect the site?

MR. CUNANAN: Yes.

CHAIR SIEBER: Grand Coulee, okay. Because the ones that are close to the site did not seem to have enough head to cause a lot of damage.

MR. CUNANAN: And the UFSAR, they also looked at the low water consideration, and the analysis showed that it wouldn't compromise the safe

shutdown of the plant.

CHAIR SIEBER: Okay, thank you.

MR. CUNANAN: In preparing the Safety Evaluation Report and in addition to the audits and inspections already mentioned, the staff conducted in-depth technical reviews and issued over 230 Requests for Additional Information.

Section 2 of the Safety Evaluation Report describes the structures and components subject to Aging Management Review. The staff issued some RAIs as a result of the scoping and screening audit, but the issues were resolved before the issuance of the SER with Open Items.

Also the applicant submitted as part of its annual update, a 440-page supplement to the License Renewal Application on July 16, 2010, that the staff had to review.

The supplement includes three new systems which are added to the scope of license renewal. The systems are heating steam, heating steam condensate and heating steam vents.

For the three new systems the applicant added no new material, aging effect or Aging Management Program, and the staff agrees with this supplemental submittal.

If there's not any questions on this slide I'll turn the presentation over to Greg Pick, the Region IV lead inspector, who will discuss the license renewal inspection review.

Greg, you can start. We're going to be on Slide 8.

MR. PICK: Thank you, Arthur. Good morning, Mr. Chairman, and members of the ACRS staff. I'm a senior inspector in Region IV. I've been leading the license renewal inspections since 2007.

I'm calling in the Wolf Creek facility in Kansas where I'm leading the fire protection inspection. Next slide, please.

Our team for the Columbia Generating Station inspection consisted of one electrical, two civil and three mechanical engineers. We did evaluate scoping of non-safety related components affecting safety related components.

We reviewed 34 of the 55 Aging Management Programs. Before I go on, can everyone hear me clearly?

MR. CUNANAN: Yes, Greg.

MR. PICK: Thank you, Arthur. And out of those 34 programs we reviewed 14 of the new Aging Management Programs and 20 of the 35 existing Aging

Management Programs.

We believe that the applicant had developed appropriate Aging Management Program evaluation reports of their Aging Management Programs that allowed us to make assessments of their plans for managing aging. Next slide, please.

In the inspection results, we questioned the applicant's suitability of using a one-time approach for several of their 11 proposed one-time programs.

We believed that the one-time programs were inappropriate since they did not verify the absence of aging effects in structures, systems and components being monitored by existing one-time programs. We contacted Division of License Renewal who shared similar concerns.

After further discussions with the team and the knowledge of forthcoming Requests for Additional Information on these programs, the applicant revisited their use of the 11 one-time programs and identified six that should be characterized as plant-specific programs, and initiated actions to develop Aging Management Programs for each.

Related to the structures monitoring

program, the one I'll visit, their procedures did not include clear and concise acceptance criteria and did not identify the detail required when documenting structural defects.

Our concern was that this would not allow for effective trending of the defects during their five-year inspections, and the different inspectors conducting inspections would not have the ability to identify any changes in the structural defects.

The applicant agreed with this and initiated a corrective action document to make sure they modify their program in the future.

For their chemistry program effectiveness we questioned the basis for their sampling plan, which specified a five percent sample of applicable components up to ten samples for each population of components grouped by material and environment.

We had revised our guidance in GALL Rev 2 for recommended sample size, and when we talked to the applicant they agreed to adopt the sample selection criteria identified in Revision 2 of the GALL for each population of components.

Next slide, please. In regards to the high-voltage insulator program, the applicant during their discussion accurately characterized what our

inspection found and the inspection team is comfortable with the actions being taken to test every eight years and clean if needed, the Ashe Substation insulators.

In its results related to buried piping, the team determined the applicant had reliability problems with their post-anode system. They had in-scope service water piping still protected with the post-anode system but would eventually need to replace the remaining existing post-anode strings.

The applicant had already installed several deep anode beds and retired the unreliable post-anode strings. The applicant has committed to install the remaining deep-bed anodes to ensure protection of the in-scope piping.

In regards to the lube oil analysis program, in their Aging Management Program evaluation report they discussed using the Karl Fischer test to identify the presence of water.

When we went to the metallurgy lab and discussed this with the people, they in reality did not use the Karl Fischer test method because it created false positives. They used a different test method for water.

The applicant committed to change their

Aging Management Program evaluation report to accurately reflect the water content test being used.

During our interviews with several of the system engineers on site, the system engineers were not comfortable with their training related to identifying aging effects on structures, systems and components that they were assigned to inspect.

We also learned from the applicant that they already had plans to provide EPRI training for monitoring aging effects, therefore the team was comfortable with the applicant's plans for providing training for their system engineers.

Next slide, please.

CONSULTANT BARTON: Before you go to the next slide I have a question and it's probably for the applicant. The bullet you brought in on buried piping cathodic protection system issues, what has the applicant done to improve that?

MS. BEAUDRY: Carolyn Beaudry, buried piping program owner. In 2008 we did upgrade our cathodic protection system although not all of it was upgraded.

We installed four deepwell anodes and we do have plans to install another one. Right now, Zone 10 of our old rectifier system is still in operation

and providing protection to our service water system, and we will upgrade when it becomes necessary. Zone 10 is still functioning.

CONSULTANT BARTON: When will you upgrade, when it becomes necessary? When will it become necessary? What's your plan to upgrade, I guess?

MS. BEAUDRY: We will upgrade when it's no longer functional and we have to upgrade. We will hopefully before then.

MR. GREGOIRE: We will be evaluating the system. It's not going to just sit there and fail on us. We'll be evaluating along the way and Engineering will evaluate the situation associated with it and make that determination at the appropriate time to replace that.

CONSULTANT BARTON: Thanks.

MR. GREGOIRE: My name is Don Gregoire.

MR. HOLSTON: My name's Bill Holston, on the DLR staff. Just to augment the licensee's response, they are committed to perform annual cathodic protection surveying, checking all ground or soil to piping potentials on an annual basis.

And from that they can easily determine where they need to make the necessary improvements.

CONSULTANT BARTON: Thanks. All right,

Greg, I'm done.

MR. PICK: Thank you, sir. Our additional inspection issue related to a, this issue was an example that had elements in both Part 50 and Part 50, and this was resolved during the inspection.

The applicant did make some changes to the Aging Management Program related to specific documentation of structural indication.

The team independently evaluated the condition of the reactor building as part of our review of the site-specific operating experience. It described a surface crack on the exterior of the reactor building.

From our walk-downs in the field, the team identified that the interior of the reactor building had a crack that followed the outline of the crack on the exterior and questioned whether this was a through-wall crack.

We had concerns that a possible aging mechanism related to moisture intrusion on the reinforcing steel may have occurred and impacts on the structural capability to withstand a design-basis seismic event.

The applicant provided photographs and they performed evaluation in accordance with the

concrete codes.

Following review of the photographs and independent review of their evaluation, the team concluded that the applicant took appropriate actions to evaluate the design capability to withstand the design-basis earthquake and to assess the impact of the aging effects.

CHAIR SIEBER: Were you ever able to determine whether the crack was continuous from the outside to the inside?

MR. PICK: Our conclusion based on the evidence that the applicant provided, the photographs and discussions and review of their construction paperwork, we do not believe that it was ever a through-wall crack.

We agree with their conclusion that it was a cold joint crack. That it occurred because they had stopped a pour.

CHAIR SIEBER: Oh, okay. Thank you.

MR. PICK: Next slide, please. Our overall conclusion based on our inspection, the applicant properly scoped non-safety related structures, systems, components, and they properly applied Aging Management Programs to those structures, systems and components.

And we believe that reasonable assurance exists that aging effects will be managed and intended functions maintained. That concludes my presentation. Are there any questions?

CONSULTANT BARTON: Yes, I've got one. Your inspection report states that the applicant had not completed many elements in their Aging Management Programs so the team could not assess the effectiveness of the planned implementation.

But yet your slide says you got reasonable assurance that aging effects will be managed and intended functions maintained, so I guess I'm in a quandary here.

MR. PICK: What specifically was missing during our inspection is, for new programs applicants generally do not have program procedures whatsoever. Our experience in Region IV has been some applicants have identified procedures, drafted procedures, identified changes to existing procedures on their plans for monitoring aging effects.

This applicant as I understand, has another program that's going to be budgeted to develop those procedures that I just talked about. That statement was specifically there for future inspections to recognize the limitations of our

inspection.

CONSULTANT BARTON: That's why I had asked the question, because I thought you'd have to do a follow-up inspection and you said you're going to probably have to do that. Okay.

MR. PICK: The follow-up inspection will be the 71-003.

CONSULTANT BARTON: Okay. I understand, Greg.

MEMBER SKILLMAN: Greg, this is Dick Skillman. The question that I have is, for each of these items that your team found, were they entered into the licensee's corrective action program?

MR. PICK: Yes, they were.

MEMBER SKILLMAN: All can be accounted for?

MR. PICK: Yes, they were. I did that independently by talking to the applicant.

MEMBER SKILLMAN: Thank you, Greg.

MR. PICK: Any additional questions?

CHAIR SIEBER: Apparently there are no additional questions.

MR. PICK: Thank you, gentlemen. I will turn the meeting back over to Arthur.

MEMBER STETKAR: Greg, don't hang up the

phone though.

MR. PICK: I don't plan on hanging up.

MR. CUNANAN: Greg will be here throughout the meeting. All right, thanks, Greg. We're going to move on to Section 3.

Section 3 of the SER covers the staff's review of the applicant's Aging Management Programs and Aging Management Review line items in each of the systems which was reviewed against the criteria in the GALL report.

For a given Aging Management Review, the staff reviewed the intended function, material, environments, aging effect and the proposed Aging Management Program combination.

If an Aging Management Review did not align with the GALL report, the staff conducted a technical review to ensure adequacy and issued a Request of Additional Information if appropriate.

Next slide. As shown on the Table, the staff reviewed 55 Aging Management Programs. The staff also reviewed over 5,000 Aging Management Review line items from the submitted license renewal application.

As Greg had discussed, there were several one-time inspection programs which were revised to a

plant-specific periodic inspection programs. The staff at headquarters coordinated with the Region about these one-time inspection program and the Region further incorporated its attention to these programs during its inspection.

The staff believed that the one-time inspection programs were inconsistent with the GALL report which recommended periodic inspections for systems that have environments that change over time such as raw water.

Subsequent generic RAIs were issued related to the sampling size. All programs shown in this slide are unique to the plant except for a Small Bore Class 1 Piping program which is a generic program that plants must revise to a plant-specific program if the plant had operating experience related to small bore weld cracking, which brings us to our first open item.

MEMBER STETKAR: Okay, before you do that, Arthur, I've got a couple questions about specific AMPs and sort of the rationale of why the staff accepted certain things.

The buried piping and tanks inspection program, in the licensee's operating experience it's noted that instances of leakage has occurred

associated with buried piping as a result of internal corrosion.

In the applicant's response to RAI B.2.5-2, they say that alternative volumetric examination methods will not be used to conduct interior wall thickness measurements in lieu of excavating and visually inspecting buried pipe.

And the staff accepted external visual inspections of buried pipe as a way to infer the thickness of the wall?

Based on the fact that they've had experience with internal corrosion of buried pipe, I don't quite understand that. So could you explain why that's acceptable?

MR. CUNANAN: Yes, I have Bill Holston that can comment on that.

MR. HOLSTON: Yes, my name is Bill Holston, Division of License Renewal. The purpose of the buried pipe inspection program is to examine only the external surfaces of the piping system.

And that's why directed excavated inspections of at least ten feet of pipe are typically the norm. What we allow in GALL Revision 2 is alternatively is to take 25 percent of the piping length and do it from the inside with an ultrasonic

examination.

Of course that gives you the added benefit of looking inside and looking from the outside. In some cases piping systems are buried 20, 26 feet in the ground and that's why we offered that opportunity.

There are other programs, for instance, internal surfaces monitoring program, the open cycle cooling water program that would address the operating experience which you cited.

MEMBER STETKAR: Does the open cycle cooling water program here include internal examination of, for example, standby service water piping and the fire protection piping that's buried?

MR. HOLSTON: I did not evaluate that program. Jim Gavula, you still on the line?

MR. GAVULA: Yes, I am. Hello?

MR. CUNANAN: Yes, go ahead, Jim. Can you answer that question?

MR. GAVULA: Yes, open cycle cooling does internal inspections. I would need to go back and look at the specific portions of the systems that it looks at though.

MEMBER STETKAR: I'd appreciate that, because at least for fire protection there seems to be evidence that they're not going to do internal

inspections of any of the buried piping sections, at least from what I could divine from a couple hundred pages worth of stuff.

So I'm really curious about whether they're going to be doing internal inspections of buried in-scope piping systems, in particular those associated with, you know, raw water fire protection, standby service water and anything else, because it wasn't at all obvious.

MR. GAVULA: If I can add, in many cases they will infer the condition of the buried piping based on the condition of the above ground piping in that the internal surfaces would be comparable as a similar environment.

MEMBER STETKAR: Okay, thanks.

MR. CUNANAN: Thanks, Jim. I also have present, Michelle Kichline.

MS. KICHLINE: Hi, I'm Michelle Kichline, License Renewal. I review the fire protection programs.

And the fire protection program does allow you to use inspections of the internal surfaces of the above ground piping to determine what the condition would be of the internal surface of the buried piping.

You can also do non-intrusive or UT

inspections to determine the condition of the internal surfaces of the piping.

MEMBER STETKAR: Okay. I guess, and this may be for the applicant. And since the operating experience mentions instances of leakage associated with buried piping as a result of internal corrosion, have you had instances of leakage of above ground piping associated with internal corrosion?

I mean is there something unique about the buried piping environment that I don't understand?

MR. ATKINSON: One moment, please.

MS. BEAUDRY: Carolyn Beaudry, buried piping program owner. The only leaking pipe that I am aware of is actually potable water which is a PVC pipe. I'll have to get back to you on to where the internal corrosion --

MEMBER STETKAR: Okay, and as I said this is only, I extracted that from the operating experience that's cited in, if you want to look it up, it's SER Section 3.0.3.2.3.

CONSULTANT BARTON: That talked about several problems in these systems.

MEMBER STETKAR: Yes, you know, that's what I extracted from my quote here.

CONSULTANT BARTON: Yes, and not just one

system.

MEMBER STETKAR: Corrosion of, you know, obviously the system you mentioned wouldn't be subjected to corrosion.

CONSULTANT BARTON: Two thin wall PVCs, something like that, yes.

MR. CUNANAN: We have it as marked to get back to you on that.

MEMBER STETKAR: Yes, thanks.

MR. CUNANAN: Okay, this open item describes the staff's concern related to operating experience. So the program descriptions in the License Renewal Application state that future operating experience will be used to adjust the program as appropriate.

The details on how it will use future operating experience to ensure that the Aging Management Programs will remain effective are not fully described.

I would like to introduce Matt Homiack, who will address this open item.

MR. HOMIACK: Good morning. Thanks, Arthur. As Melanie Galloway highlighted the importance of this issue during the meeting, on behalf of the staff I will follow her lead and provide some

additional context.

As Arthur mentioned, this open item concerns how the applicant will use future plant specific adjustments through operating experience to ensure that its AMPs are effective and to update them or to create new AMPs when necessary.

This is a new emergent issue under NRC staff review for all license renewal applications. It has not previously been presented before the ACRS.

Melanie mentioned that the staff undertook an effort to review applications against GALL Rev 2 changes, this is a similar item except it stems from the SRPLR Rev 2.

To ensure that new issues and lessons learned on aging management will be appropriately captured and evaluated, the staff has asked the applicant to describe its programmatic activities for the ongoing review of operating experience.

In response to the staff's RAI, the applicant has proposed to use its existing operating experience program in conjunction with its corrective action program as the means to gather and evaluate operating experience.

However, the applicant did not provide details with the respect to how information on aging

management will be considered under these two programs. Some of these things are like identification and categorization of operating experiences related to aging management.

Clearly the corrective action program is a critical element for the applicant's ability to use operating experience. Do they have the ability to put the right information into that program and also to extract the right information out of that program?

Also of concern is what type of information the applicant will consider in operating experience evaluations when they concern aging. Are they going to look at the materials and environments and aging effects when necessary?

Also of concern is the type of information that the applicant's going to consider as operating experience. Initially they had indicated that they would not consider subsequent revisions of the GALL report as operating experience.

Note that they did say that they would consider GALL Rev 3 as operating experience so we're glad to hear that, but it also extends to other, you know, lessons learned as operating experience that we think that should be considering as well, also training for use of these programs on age related

degradation.

We did note that the applicant has initiated some action and to provide some training to its personnel. However, we think there's probably additional areas that need training such as for screening operating experience and also for submitting operating experience information.

Also note that the applicant indicated earlier that it's using its License Renewal Team on a daily basis to screen operating experience and that kind of thing.

My question is that that, is a correct-out because the applicant's applying for license renewal? We'll need to see some plans on how they want to go forward with that on an ongoing basis.

So in summary, the staff is challenging the applicant to make sure that its existing processes are appropriately sensitized with respect to the consideration of operating experience on aging management.

MEMBER SKILLMAN: Matt, this is Dick Skillman. Let me ask you to explain a little more regarding your last comment.

What I heard you say is it seems the applicant has zeroed in on OE because they're making

an application. Please say more about what you meant when you said that.

MR. HOMIACK: What we want to see is a plan to go forward and consider operating experience for license renewal on an ongoing basis. So the question is, how is the applicant going to, you know, essentially move from its License Renewal Team to its normal plan operating staff, you know, for license renewal?

MEMBER SKILLMAN: May I ask, as you have made that comment is there reason to believe they wouldn't invest the same amount of energy in the future that they are now investing in OE?

MR. HOMIACK: No, I don't think so. But we just want to see what their plan is for making that transition.

MS. GALLOWAY: I think we see this more as a broad industry issue. There's a difference in the first 40 years of operation where there's a lot of emphasis on failures and events and operability.

But when you get into an aging management emphasis there's more of a prevention and how do you change things in your program so that the failures don't occur. And that's the kind of transition we want to be sure and see.

And that's the training and that's the orientation and that's this idea of thresholds, of understanding when you get enough operating experience information you rationally need to process it as a change to your Aging Management Programs. And that's what we want to look at.

And when we talked about updates to guidance documents, you know, we're glad when we hear the industry looked at a GALL Revision as operating experience, because clearly that's what we view it as a compilation of.

But what we want the industry and applicants to be sensitized to is that by the time it gets in an update to a GALL it's already historical. We want them to be evaluating it in real time.

We don't want them to wait for the industry compilation to come out from the NRC, and we want it to be both plant specific information as the corrective action we have talked about during the applicant's presentation, but we also want the information shared so that the industry as a whole has the benefit of aging management operating experience that can be incorporated into maintaining the effectiveness of those Aging Management Programs for that 20-year license renewal period.

MEMBER SKILLMAN: Thank you.

MR. CUNANAN: Are there any further questions on operating experience? All right, thank you, Matt and Melanie.

This open item describes the staff's concern related to the high voltage porcelain insulators. The high voltage porcelain insulator program manages the buildup of hard water residue on in-scope high voltage insulator deposited by vapors from the cooling towers.

Management of this effect consist of either periodic coating or cleaning of the high voltage insulator. The staff noted that the applicant did not include the high voltage porcelain insulator at the 230-kilovolt Ashe Substation in the High Voltage Porcelain Insulator program even though its breaker provided an alternate path during a station blackout.

The applicant stated that it did not include these porcelain insulators because they concluded that the spray drift phenomenon would not occur due to the significant distance from the cooling towers, but could not provide any further information to support its conclusions.

Since then, the applicant submitted its

RAI response indicating that it would include the 230-kilovolt porcelain insulator as part of the High Voltage Porcelain Insulator program with testing every eight years and cleaning if needed.

The staff has reviewed the applicant's response and expects to close this item. Is there any questions on this program?

Section 4 of the SER contains the staff's review of the Time Limited Aging Analysis, TLAA. The following slides presents the open items related to the TLAAs.

This open item describes the staff's concern related to metal fatigue. This is a generic item that the ACRS has seen before with previous plants, such as Hope Creek and Salem.

The applicant stated that it addressed the effects of component fatigue life by assessing the impact of the reactor cooling environments on a sample of critical components identified in NUREG-6260.

This NUREG identified sample locations that are susceptible to the effects of a reactor cooling environment. The staff noted that the applicant's plant specific configuration may contain additional locations that need to be analyzed for the effects of the reactor cooling environment other than

those identified in NUREG-6260.

The applicant stated that it will submit its analysis to the staff to resolve this open item. The staff must still review this analysis when it is fully submitted.

MEMBER STETKAR: Arthur?

MR. CUNANAN: Yes.

MEMBER STETKAR: Not related to this specific open item but the general topic of metal fatigue, I noticed that the projected number of transient cycles for a number of transients out through the 60-year period of extended operation will well exceed the number of analyzed cycles.

If just look at their linear extrapolation in Table L4.3-2 of the License Renewal Application and, in fact, it looks like, you know, a number of those will exceed the number of analyzed cycles even before you enter the period of extended operation.

And I think the staff had a couple of RAIs regarding that and I understand that the applicant has a program to constantly reevaluate the number of cycles.

The question I had was, did you ask the applicant for any histograms of the actual annual occurrence rates of each of those transients so that

you could see if there were any trends?

In other words, in some plants you notice a very large number of transients early in core life with a decreasing number as a function of history, which means those linear extrapolations might be very, very conservative.

On the other hand, if the frequency has remained fairly constant over the how ever long it is operating the plant, 20 some-odd years now, yes, you draw a little bit different conclusion about the possible conservatism of those extrapolations.

Did you ask for any of that information? Was it supplied?

MR. CUNANAN: Allen Hiser can speak to that.

MR. HISER: We did not in this case and generally we don't look for details like that.

MEMBER STETKAR: Okay.

MR. HISER: The applicant, within their calculations once they establish a limit on the number of cycles, if it turns out to be non-conservative they have to deal with the consequences of that through their Aging Management Program.

So whether the analysis is conservative or potentially non-conservative at this point, ultimately

they still have to deal with the --

MEMBER STETKAR: I was more curious because they did what seems to be a linear extrapolation. Other applicants have gotten fairly creative about segments of the data, historical data that they use for the extrapolations. Here it was strictly a linear extrapolation.

MR. HISER: Well, it's linear but if it's a two-point linear, if you do have a decreasing trend then -

MEMBER STETKAR: And that's why I say, in this particular case since they did just a linear extrapolation I'm less concerned about it. I was just curious whether you'd actually asked them for it.

CONSULTANT BARTON: Some applicants have actually come in here and showed us the history.

MEMBER STETKAR: No, that's right. That's right.

CONSULTANT BARTON: Yes, and then it kind of peters out.

MEMBER STETKAR: The reason I bring it up is just whether you'd asked for it, because other applicants have used selective exclusion of certain parts of their operating history to justify different extrapolations.

MR. HISER: If we see anything unusual in the way that they have treated their data then we would go into more detail on that. But in this case with the linear extrapolation and our expectation of a decrease in trend in transients, it really wasn't necessary.

MEMBER STETKAR: Okay. Thank you.

CHAIR SIEBER: Well, part of the analysis is to identify all of the transients that occurred so you can tell what the operating experience really is. In some cases that requires a lot of detail work in reviewing logs and plant transients and so forth.

Some licensees will use the design functions which are usually conservative, and say I either do or don't have enough cycles remaining to last through the 60-year lifetime.

My question would be, to what extent did this licensee use actual operating history to determine what the cycles were and how many assumptions went into that process to sort of fill in the blanks for avoid having to do detailed day-by-day, week-by-week or month-by-month analysis of what the transients were and how do we know the information?

MR. CUNANAN: I have Ching Ng who can speak to that.

MR. NG: This is Ching Ng from License Renewal. In applicant's fatigue monitoring program they say that I will track, they will look at the trends of the occurrence of the different transient on an annual basis.

And even though that they don't have a specific action limit, for example, 80 percent or 70 percent, but by looking at a trend annually the staff believe that applicant can enable to catch the instances when the occurrence of transient exceed the design limits.

CHAIR SIEBER: Okay, but does that include examination of the past history of the transients at the plant or do they make some assumptions and say, this is our base point from this point forward where we're going to count transient, which is of those is true?

MR. NG: I think let's step back and, typically during the Aging Management Program audit the staff will look at the histogram of the occurrences of the different transients.

And those histograms of occurrences, the staff reviewed it on site and do not require them to submit it as part of license renewal, but the staff did look at it.

MEMBER STETKAR: Was that histogram available during the audit on this applicant?

MR. COLE: Jack Cole, Energy Northwest engineering staff. What we at Energy Northwest did is we looked at our operating transients, our cycle counting, over the full period of 1983 until this time.

And we found that some transients were going to be lower and some were going to be higher. We were short on startups and shutdowns. As result of our review, we issued what we, tech metal, it has the projected number of cycles for the full 60-year life of the plant.

And for our fatigue analysis, then we went back for our TLAA evaluation with environmental fatigue, updated the cycles to the projected 60-year cycles and re-ran those analyses.

The plant has a commitment now that when they are approaching any of the limits they will have to update to Class 1 design reports. But as we've done that for all of the TLA locations we have good expectation.

We've already evaluated the maximum usage locations for these revised cycles, so we will take on the activity to update for the revised projected

cycles.

CHAIR SIEBER: Thank you. That answers my question.

MR. CUNANAN: Is there any further questions with metal fatigue? All right. This open item describes the staff's concern related to the core plate rim hold-down bolts.

In the original license renewal application the applicant stated that Columbia had core plate wedges installed around the periphery of the core plate within the shroud.

Core plate wedges prevent lateral motion of the core plate and are not subject to stress relaxation. However, in a conference call the applicant stated that it had discovered there were no core plate wedges located around the periphery of the core plate within the shroud.

Having no core plate wedges results in the applicant having to perform bolt inspections as described in BWRVIP-25 titled BWR Core Plate Inspection and Flaw Evaluation Guidelines.

The applicant submitted a license renewal application supplement to include a commitment to install wedges at least two years prior to the beginning of the period of extended operation or

submit a plant specific TLAA addressing the stress relaxation of the core plate rim hold-down bolts to the NRC for review and approval at least two years prior to the period of extended operation.

However, the applicant had not selected one of the three options of 10 CFR 54.21(c)(1) to demonstrate the evaluation of the TLAA. Also the applicant did not provide an AMR line item for the core plate rim hold-down bolts for the aging effects of loss of preload due to stress relaxation.

Furthermore, the applicant stated that it would deviate from the BWRVIP-25 inspection guidance until December 31, 2015, because as with other BWRs with no wedges it does not plan to inspect the hold-down bolts for stress relaxation due to the difficulties in performing the inspection.

The staff has concern that the effects of aging will not be adequately managed without performing the inspections. The applicant has not yet provided its response for staff review.

MEMBER STETKAR: Arthur, and I asked this earlier. This is I assume an issue for the current licensing basis as well as the license renewal, is that correct? Because it's sort of a bit disturbing that they discovered in 2011 that they didn't have the

wedges in a plant that's been operating for 27 years.

MR. CUNANAN: Yes, we agree that it's a current licensing and a license renewal kind of issue.

MEMBER STETKAR: And NRR is following --

MR. CUNANAN: Yes, we're currently with --

MEMBER STETKAR: Just out of -- I'm not a boiling water reactor guy so I'm, nor am I structural guy so I'm speaking well out of my area of expertise. You mentioned other boiling water reactors don't have the wedges either.

Have any of them performed inspections of the bolts during their current licensing period?

MR. CUNANAN: Chris Sydnor?

MR. SYDNOR: Hi, this is Chris Sydnor. I'm a materials engineer in Division of Component Integrity, since been consolidated into the Division of Engineering.

We engage the BWRVIP, is the EPRI BWR Vessels and Internals Project, on these kinds of issues in current licensing space and during the current for, on an ongoing basis.

That's correct. The deviation that was discussed in the slide is in a sense kind of generic for all boiling water reactors without wedges. So we're going to be kind of engaging them in, you know,

on an ongoing basis on the potential need for inspections as discussed in BWRVIP-25, and if inspections are not performed what kind of analyses are being done to support that conclusion.

MEMBER SHACK: Yes, but how have you dealt with this problem with the other BWRs in license renewal? I mean I went back and looked and a lot of them had deviations but then it wasn't clear to me how they were resolved.

MR. CUNANAN: Yes, to that point there is the deviation and then until the point where it pass the date of 2015, then a decision has to be made whether to do inspections or it's a revise from the BWRVIP program that shows how the inspections will be conducted.

MR. SYDNOR: Yes, the subject deviation is set to expire at the end of 2015, December 31st, 2015.

MEMBER SHACK: And so the other BWR license renewals probably have a similar sort of a thing for their deviations? There's a --

CHAIR SIEBER: For a currently operating plant ultimately.

MR. CUNANAN: Yes, for a current operating. I have Jeff Poehler on the microphone too.

MR. POEHLER: Yes, Jeff Poehler, Senior

Materials Engineer in the Vessel Internals branch of Division of Engineering. Yes, to the other question, have other BWRs inspected?

Some have performed inspections of those bolts but they have not performed the inspections that were originally prescribed in the BWRVIP-25 Inspection Evaluation Guideline, because it originally prescribed ultrasonic testing or a VT1 from below the bolts which proved to be unfeasible.

So some of them have done limited VT3 visual inspections of some portion of the bolts.

MEMBER SHACK: There's a big difference.

MR. POEHLER: Right, but yes, it's basically in my understanding is they've done those from above and it's been a best effort to see if the bolts have rotated, which would indicate fractured bolts.

And they haven't seen any evidence of any IGSCC cracking that would cause failure. But again they're not doing ultrasound exams which would be more effective.

So it needs to be addressed on a generic level for the whole fleet, the whole BWR fleet. And a number of them have submitted the TLAA, committed to do the TLAA for stress relaxation and have submitted

those analyses.

CHAIR SIEBER: Any further questions on this topic? Okay.

MR. CUNANAN: Okay, moving on to the next slide. This open item describes the staff's concern related to the upper-shelf energy. I would like to introduce Allen Hiser to present this open item.

MR. HISER: Thanks, Arthur. As the applicant described earlier they identified several small-bores from the instrument nozzles that have neutron fluence levels above 1 times 10 to the 17th neutrons per centimeter squared, and this necessitates consideration of neutron embrittlement effects in these nozzles.

For the N12 nozzle forging, which we saw several schematics from the applicant, the applicant demonstrated that the, showed that the upper-shelf energy would meet the Appendix G requirements of 50 foot-pounds using an initial energy of 62 foot-pounds and copper content of 0.27 percent identifying that these values are not heat specific but come from a statistical analysis performed by General Electric.

In the absence of a technical basis for these assumptions, the staff has requested that the applicant provide documentation of the source of these

values so that the staff can determine acceptability of the applicant's analysis.

The applicant as I stated earlier has indicated they will provide this information in its RAI response.

CHAIR SIEBER: Is that kind of information typically retrievable by licensees, the non-specific characteristics of various heats?

MR. HISER: It depends on what's available. In the case of this nozzle, there was no heat specific NPRs with Charpy data or with the copper content. In this case they're relying on a database analysis from other similar heats.

CHAIR SIEBER: Yes, that's where the issue is. And so what happens if you don't come up with item-specific heat data?

MR. HISER: Well, if you don't have heat specific then the staff generally has accepted an analysis of a database of similar materials. In this case, this is an A508 grade Class 1 forging and so they have data that, they have indicated that they have data for other A508 Class 1 forgings.

CHAIR SIEBER: Similar, yes. Okay.

MR. HISER: So depending on how they analyze the data and where their assumed values are

relative to that database will determine whether we find it acceptable or not.

CHAIR SIEBER: Okay, thank you.

MR. CUNANAN: Any further questions on the upper-shelf energy open item? Okay, next slide. Thanks, Allen.

This open item describes the staff's concern related to the applicant's analysis for its cranes. The applicant states that the analysis for its cranes does not meet the definition of a TLAA.

However, the staff believes that the analysis for its cranes meet the definition of a TLAA because there is a design limit on the number of cycles specified in Crane Manufacturers Association of America, CMAA 70 specifications, which involved a time limited assumption.

The applicant has submitted its RAI response indicating that it would analyze the cranes under 10 CFR 54.21(c)(1)(I). The staff is still reviewing its response.

In conclusion and pending successful resolution of the open items, the staff will be able to determine that the requirements of 10 CFR 54.29 (a) have been met for the license renewal of Columbia Generating Station.

The staff's conclusion will be provided in the final Safety Evaluation Report which is scheduled for a February 2012 issuance, which Melanie has stated in her introduction may be challenging due to the extent of RAIs and open items.

And with the possibility of follow-up RAIs we are looking ahead towards the need for further scheduled delays. This concludes my presentation. Do you have any further questions?

CHAIR SIEBER: Any further questions?

MEMBER SKILLMAN: I do. This is Dick Skillman. In the past say three operating cycles, six years on the 24-month cycle, has this station been in 95-001, 002 or 003?

MS. GALLOWAY: Greg, can you answer that?

MR. GREGOIRE: Don Gregoire, Regulatory Affairs Manager. We had a 95-001 due to a multiple scrams performance indicator going white, and that was in 2009 time frame, 2010 time frame.

MEMBER SKILLMAN: Thank you.

CHAIR SIEBER: That's the only one.

MR. GREGOIRE: That's the only one in the last, what did you say?

MEMBER SKILLMAN: Three cycles, six years.

MR. GREGOIRE: I think we might have had

one related to security.

MEMBER SKILLMAN: That's fine. Thank you.

CHAIR SIEBER: Any additional questions from the members? John?

MEMBER STETKAR: I have one for the, not for the staff if you want to dismiss the staff, I have a follow-up for the applicant.

CHAIR SIEBER: Well, go ahead.

MEMBER STETKAR: Okay. I'm back on the bus duct failure out in the turbine building. And my problem is I don't understand the words fail-safe, so I tend to just dismiss those words as kind of meaningless.

The steam pressure sensors that are out in the turbine building are there for a reason. They actuate MSIV closure for some types of steam line breaks I assume.

You know, what they're there for in particular and where they are, I have no idea. My question is, can you have failures of those cables or the pressure sensors such that the low steam pressure signal does not go into the protection logic and therefore does not close the MSIVs?

That is not a fail-safe, it is not a cut the cable and have an open circuit, it is not the

design basis analysis of the transmitter. It's can you have a failure of that cable that gives you a false high pressure signal thereby disabling the MSIV closure signal from those sensors? That's the question.

If the answer to that question is yes, then I'm really not sure why things that can affect those cables are excluded from the scope of license renewal.

MR. ATKINSON: We'll have to have just a moment to think about this.

MEMBER STETKAR: Okay. It's very complicated and it's the way people don't normally think because people think fail-safe, fail-safe, fail-safe.

And it gets to -- Jack asked the question and we got a very quick response, but it really didn't address the fundamental issue. Sorry. We have time so I thought I'd bring it up.

CHAIR SIEBER: We actually have an additional 12 hours.

MR. ATKINSON: Yes, this is Dale Atkinson with Energy Northwest. We'll take just a few minutes. We're going to have to have some candid discussion about where the physical location of those devices are

that perform this function and verify that this is --

MEMBER STETKAR: Also the cables too.

MR. ATKINSON: Right.

MR. CUNANAN: Also if the applicant's answer is not satisfactory to the staff we will continue further discussion after this.

MEMBER STETKAR: You know, in some sense it would be nice to have a definitive answer, you know, within the context of this meeting, but understand. Occasionally you do have takeaways from these subcommittee meetings.

CHAIR SIEBER: I would like to have it on the transcript if we can.

MEMBER STETKAR: If we can. But if we can't, you know, we can follow up and if there's another subcommittee meeting or a full committee meeting we can follow up. We tend not to forget.

MR. CUNANAN: We do have a takeaway with your question on the internal corrosion.

CHAIR SIEBER: I have schematics but I don't have physical layouts. I have all the drawings of the plant but they're off of schematics.

MEMBER STETKAR: You don't have electrical drawings, do you?

CHAIR SIEBER: I have whatever is in the

FSAR.

MEMBER STETKAR: I couldn't find much on electrical in the --

CHAIR SIEBER: It's not complete. It's single lines and typicals. And single line doesn't answer it.

MEMBER STETKAR: No, no.

MR. ATKINSON: Is this an item we're going to be able to give back to you in a few minutes or do you want to just wait right now for a response?

CHAIR SIEBER: I think the choice is pretty soon or at the full committee meeting.

MR. SWANK: I'll give you what we have. So I think there's some confusion on what signals we're talking about. This is Dave Swank, Energy Northwest.

So they'd be, signals of concern would be DEH oil pressure, low oil pressure which would feed into RPS, Reactor Protection System. And then secondarily, also feeding into RPS would be the throttle valve position.

So those are the two signals there at the, if you remember for those of you who came to the plant, on the west end of the turbine building are all the non-segregated buses that we're talking about.

These signals are all down on the east end of the turbine.

And so what we're looking at, believe we evaluated it, we want to verify that we evaluated the distance and the potential effects from any of the buses on the west end to the signal cables on the east end running to the control room.

MEMBER STETKAR: The reason I focused on this was not so much the RPS, the reactor scram. It's, and I'll give you a hook and this again is from the SER. But it's the response to RAI 2.1-1(a).

And at least as it's characterized in the SER, it talks about loss of RPS and MSIV isolation logic sensors. And it says things like, the safety related MSIV isolation logic sensor inputs the safety related components of the miscellaneous drainings system and safety related main steam valves located in the turbine generator building are classified as safety related because of an NRC commitment, yada, yada, yada.

That's what led me to believe but, you know, I know you have EHC oil pressure, I know you have a turbine stop valve or a governor valve input for reactor protection.

The sense that I got from that is there

also may be steam pressure or steam flow sensors out there in the turbine building that give you an MSIV closure signal. Perhaps I'm misinterpreting or reading too much into the, you know, this excerpt from the RAI response.

MR. SWANK: And I think that may be the case.

MEMBER STETKAR: If that's the case that's fine, but --

MR. SWANK: The only safety related --

MEMBER STETKAR: That's the only one.

MR. SWANK: Yes, the ones you described, those two sets of instruments are the only safety related components in the turbine building.

MEMBER STETKAR: And that's just the EHC oil pressure and the turbine stop valve or control valve position?

MR. SWANK: Exactly. Correct.

MEMBER STETKAR: I think I'm happy with that. There are a number of reactor scram signals that come in from various and sundry, but I was more concerned that -- for some reason I've seen plants that have secondary steam, you know, steam pressure for secondary steam line breaks out in the turbine building that feed back into the MSIV closure logic

which is a completely different function.

And, you know, there may not be a backup protection for some of those breaks.

MR. SWANK: Right.

MEMBER STETKAR: But if you tell me there's none of that type of sensors out in the turbine building I'm satisfied.

MR. SWANK: Okay. We've asked that question to our team back home. We're looking for the answer back.

CHAIR SIEBER: Yes, when we have the full committee meeting perhaps you can direct that as --

MR. SWANK: Thanks.

CHAIR SIEBER: Well, I think we're at the point on the agenda where we will, it's labeled Subcommittee Discussion. Generally during meetings, types of subcommittee meetings for license renewal, we ask each of the members if they have comments to make or concerns that have either not been addressed or have arisen during the conduct of the testimony here.

Gordon, do you have any of those two categories, additional questions or concerns?

MEMBER SKILLMAN: I don't have a concern but I have an observation.

CHAIR SIEBER: All right.

MEMBER SKILLMAN: I found in the work that I've been doing for some time that when an inspection team or the station's CNRB or other oversight members find that there is weakness in a particular program, it doesn't take long to find that that weakness is promulgated into other related programs, and among them the corrective action program.

And so to the extent that the aging programs or the oversight of the aging programs may not drive the rigor and discipline to identify the problems or the issues in the corrective action program, that gives me cause for alarm. And it just reinforces how important the focus is on 10 CFR 50 Appendix B.

It's almost a lost art in our business that unless senior leadership is driving hard to implement all 18 points, then it's very easy to forget about design control, good old Number 3, our corrective action program, which I believe is XIV.

And so when I hear a weakness here and weakness there, I go to that point in my mind where I say, how much energy is senior leadership investing in ensuring that Appendix B to 10 CFR 50 is really being obeyed?

And to the extent that that feeds into all

other programs, I raise that flag.

CHAIR SIEBER: Okay.

MEMBER SKILLMAN: Thank you.

CHAIR SIEBER: Thank you. Bill?

MEMBER SHACK: Maybe a similar one. That, you know, I looked at the regional inspection and the AMP inspection. They seemed to find a lot of problems and I think more so than I think is fairly typical, and you sort of wonder whether you should, you know, there have been an expanded inspection like we do for steam generators?

You know, when we find out we've got this many problems in these, you know, should you look at all the Aging Management Programs?

But, you know, the staff seems to feel that what they're doing is satisfactory but that's just, I just wondered if there is a, you know, a program where you would, in fact, go back for another regional inspection just to see if, in fact, they really followed up or to look at the rest of the programs.

If the batting average is that poor on the first sample, you know, should you be doing more?

CHAIR SIEBER: Okay, and I think that's based on most of these comments. That's a worthy

thing for the staff to think about whether they need to do something additionally or whether they can under the inspection programs that are out there.

John? Thanks, Bill.

MEMBER STETKAR: I have nothing more to add. I kind of echoed Dick's and Bill's sentiments regarding possible follow-up.

CHAIR SIEBER: Yes, I come up with the same kinds of feelings that the other members have concluded in this area. And I'm not sure what mechanisms the staff has to address that but I think it's something that we ought to think about.

MEMBER STETKAR: I know at least on one plant license renewal, you know, that I chaired, the staff indeed did a second follow-up inspection. It wasn't on looking at an additional number of AMPs, it was a different issue, but indeed they did another inspection.

So apparently before the whatever it is, the final 70-something or other, I can't open on numbers, before the --

CONSULTANT BARTON: Yes, I don't remember which plant that was but I remember the issues.

MEMBER STETKAR: And it doesn't make, I actually do remember the plant but it's not relevant.

CHAIR SIEBER: Yes, I remember a similar instance, but this one is a more general which is, what is the total adequacy of all the programs? I mean are they effective or not to be able to draw conclusions applicable to license renewal or not?

And I think that we have to ponder that but I'd like to ask the staff to ponder that also.

MEMBER STETKAR: And in a sense we're sort of quizzing the staff the same way they quiz the applicant about, if you find the deficiency what's the program for increasing the sample size?

CHAIR SIEBER: Okay, is there any other comments from members? John?

CONSULTANT BARTON: Yes, I don't like doing reviews of plants that are 12 years out, and I think some of the comments you're hearing is because of that.

The plants that are closer to the, you know, the period of extended operation, the start of that, seem to be more prepared in their Aging Management Program, at their training.

They've actually run some of their programs so that you get a good sense of how ready they really are. I mean we're 12 years out, we're hearing they're not ready, they're not trained.

They've got a bunch of programs, they've miscalculated programs, a bunch of issues that, you know, is it really meaningful or not? But they've had a lot of time to go and fix these things.

So when you look at a program this far out I don't know what it really tells you, how ready they really are for their extended license. And, you know, as far as any major issues, are there any, you know, big things out there I see in reviewing this, no, I don't.

But I see a lot of smaller issues that -- and I wonder about the inspection. We've done the inspection. The NRC has 12 years out and lots of open items.

And when I asked are you going to do another one, no, we're going to the final 70P3 or whatever it is. Well, I'm looking for something between now and then because of the number of issues you've got out here.

CHAIR SIEBER: Well, you know, the Columbia's not unique in this regard. I think that the program either says you ought to have the programs in place where you have to have sufficiently clear commitments, the program that you will establish before license renewal takes effect will properly

cover the issue.

And so the situation the Columbia presents to us is not unique at least in my experience and I've done audits.

On the other hand, what it does is it transfers to the inspection process basically the obligation to determine if the details that the programs that licensees establish fully satisfies number one, the regulations, and secondly, the commitments that they made in the process of applying for license extension.

So the situation we're faced with here is not unique. On the other hand, the opportunity for ACRS to become involved goes away once we approve the staff's action to bring it an extended license.

And so I appreciate the concerns that we have because it's sort of like grabbing at a cloud, but I think the point that's to be made from this discussion amongst all of us is the fact that if you get your renewed license that does not stop the additional work, the additional thought and the additional definition of the requirements, and are these requirements being satisfied to make a renewed license or an extended license valid?

And so that obligation I think is upon all

of us to do, applicants and staff. And on the other hand, I think that we can all put some additional thought into these concepts and maybe the process could be improved a little bit. But right now I'm not prepared to describe how we could contribute to an improved process.

Any other comments from the members? If not, I'd like to thank the applicant for the work they have performed and for coming here with a large contingent of plant people.

I hope there's somebody left in the state of Washington or out at the plant to keep it safe. And I think the staff has done a very good job in the review and I'd like to thank you also. It's not only for the work that you did but for your presentations today.

And I would ask at this point, if there are any members of the public who would like to make a statement before the committee? If not, I thank all of you for the work that you've done to prepare for this meeting and for the presentations that you have made.

With that this meeting is adjourned.

(Whereupon, the foregoing matter was concluded at 11:55 a.m.)

1

Columbia Generating Station

ACRS License Renewal Subcommittee Meeting

October 19, 2011

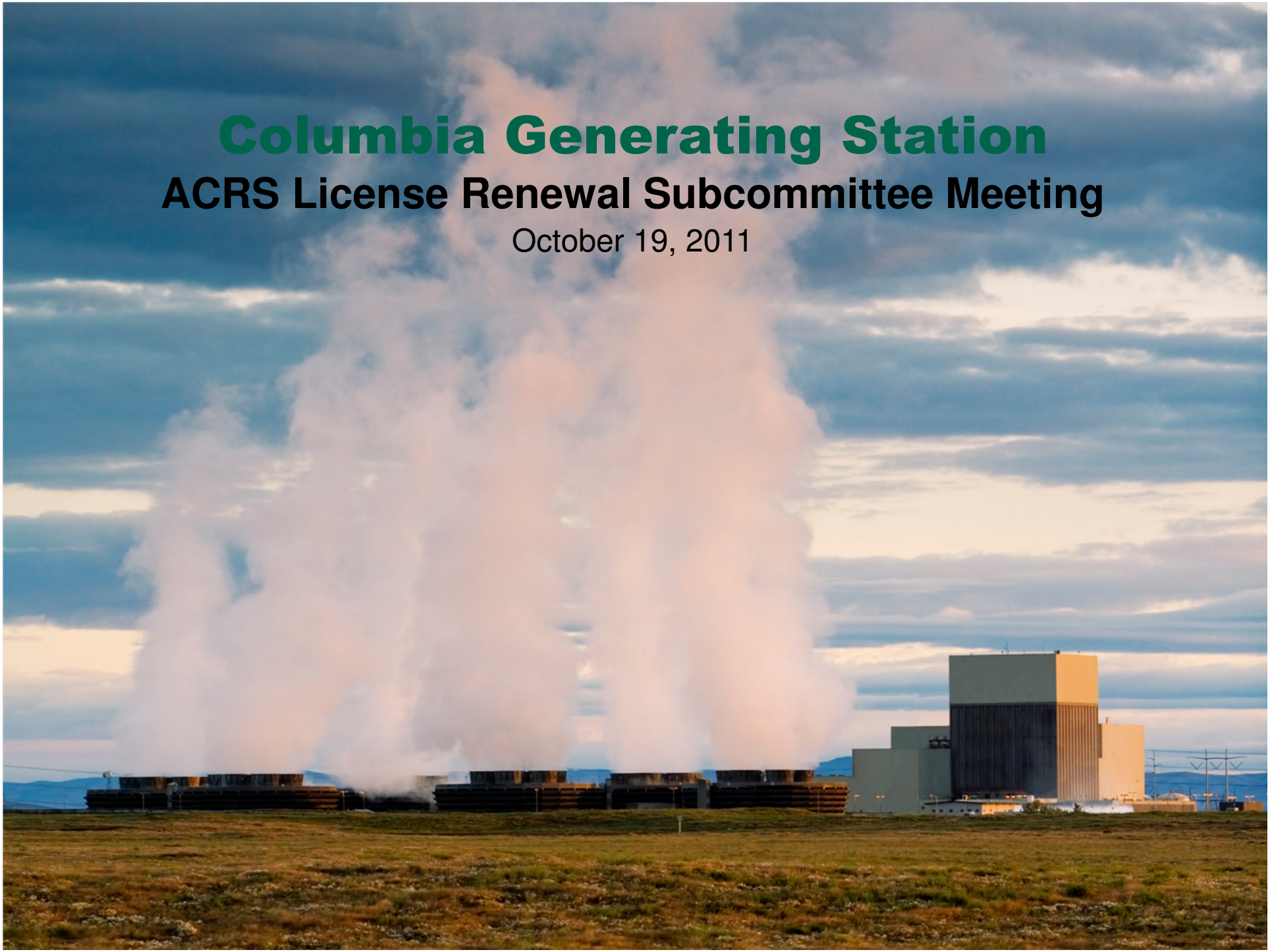

Columbia Generating Station

Dale Atkinson -	Vice President, Emp Dev/Corp Services
Dave Swank -	Engineering General Manager
Don Gregoire -	Manager, Regulatory Affairs
John Twomey -	Project Manager, License Renewal (incoming)
Abbas Mostala -	Project Manager, License Renewal (offgoing)

ENERGY NORTHWEST

Columbia Generating Station Team

Plant Management

- Dale Atkinson
- Dave Swank
- Bruce MacKissock
- John Bekhazi
- Don Gregoire
- Brian Adami

License Renewal Team

- John Twomey
- Scott Wood
- Abbas Mostala
- AREVA Team

Program Owners/Subject Matter Experts

- Carolyn Beaudry
- John Lasalle
- John Sisk
- Steve Richter
- Steve Gosselin
- Jack Cole
- Doug Ramey
- Mott Hedges
- Jim Tansy
- Robert Nielson

ENERGY NORTHWEST

Agenda

- Energy Northwest and Plant Overview
- Plant Status, Major Improvements
- License Renewal Application
- Safety Evaluation Report Open Items
- Concluding Remarks

ENERGY NORTHWEST

Energy Northwest at a Glance

- Providing public power since 1957
- Hydro, solar, wind and region's only nuclear power plant
- Projects generate carbon-free power for 1 million homes

Who are We?

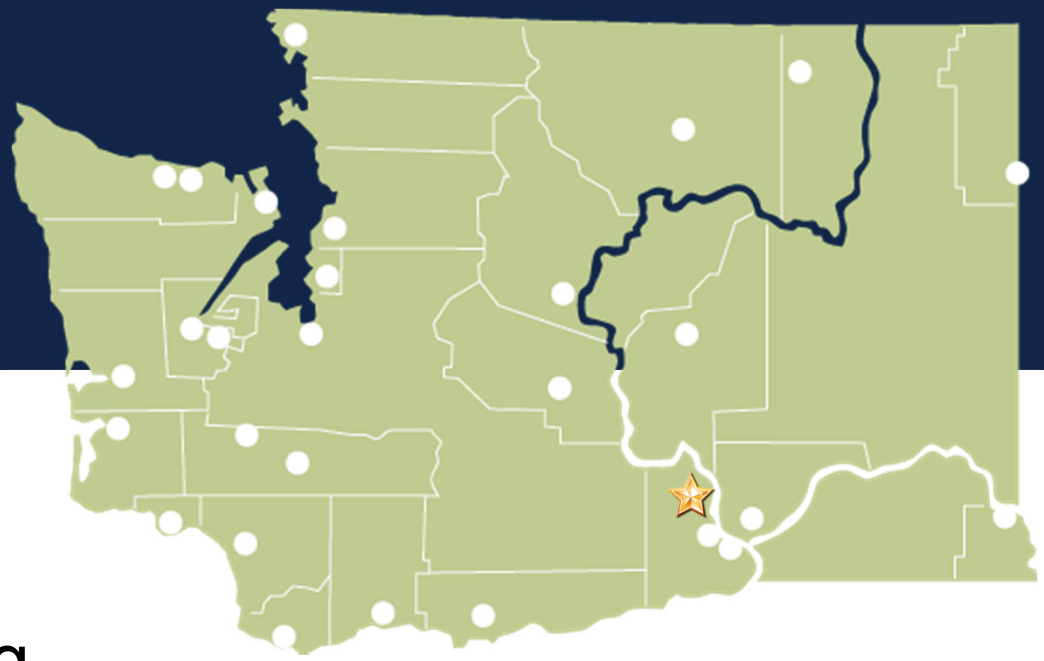

Energy Northwest is a Joint Operating Agency authorized by the State of Washington

7

Hanford Site – Tenant Only

- Approximately 1100 acres leased from the Department of Energy (DOE).
- Located on the Hanford Nuclear Site which is wholly owned and operated by the DOE.
- Energy Northwest maintains authority to determine all activities in the plant's exclusion area as defined in 10 CFR 100.

ENERGY NORTHWEST

Plant History

- Construction Permit – March 19, 1973
- Operating License – December 20, 1983
- 5% Power Up-Rate - May 1995

ENERGY NORTHWEST

Plant Description

- General Electric Boiling Water Reactor
  - BWR-5 / Mark II Containment
  - Plant circulating water & ultimate heat sink makeup supplied from the Columbia River
- 3486 MWt/1230 MWe

ENERGY NORTHWEST

Plant Status and Major Improvements

David Swank
Engineering General Manager

ENERGY NORTHWEST

Plant Status

- Recently completed refueling outage R20
- Significant accomplishments during outage:
  - Replaced main condenser
  - Replaced main generator rotor
  - Modified non-segregated bus

ENERGY NORTHWEST

Major Improvements

• Main condenser replacement	2011
• Reactor recirculation pump motor replacements	2007, 09
• Feedwater heater replacement	2007
• Improved turbine control system	2007
• Addition of 4th diesel generator	2005
• Emergency bus cross-tie	2005
• Hydrogen water chemistry	2004

ENERGY NORTHWEST

Major Improvements (cont'd)

• Noble metal coating - reactor vessel internals	2001,07
• 24 month operating cycle adopted	2001
• Reactor recirculation pump adjustable speed drive	1996
• Digital feedwater level control system	1996
• Low pressure turbine rotors replaced	1992

ENERGY NORTHWEST

License Renewal Application

Don Gregoire
Manager, Regulatory Affairs

ENERGY NORTHWEST

License Renewal Application (LRA)

- License Renewal Project
  - Initiated 2006
  - Team Established June 2007
  - LRA Peer Reviewed May 2009
  - LRA Submitted January 2010
- LR Team Engaged with the Industry
  - NEI License Renewal (LR) Task Force and Working Groups
  - Observed Audits/Inspections at other Plants
  - Participated in other Plants' LR Peer Reviews

ENERGY NORTHWEST

License Renewal Application

- Scoping and Screening
  - Consistent with 10 CFR Part 54 and NEI 95-10
  - In-scope structures, systems, and components screened to determine if Aging Management Review required
  - Mechanical boundary drawings identify (a)(1), (a)(2) and (a)(3) in-scope components

ENERGY NORTHWEST

License Renewal Application

- Aging Management Review (AMR)
  - Consistent with 10 CFR Part 54 and NEI 95-10
  - Used NUREG-1801 Generic Aging Lessons Learned (GALL) Report Revision 1

ENERGY NORTHWEST

License Renewal Application

- Aging Management Programs (AMP)
  - 55 Programs Credited for LRA
    - 35 Existing
      - 14 Enhancements
    - 20 New

ENERGY NORTHWEST

License Renewal Application

- Time-Limited Aging Analyses (TLAA)
  - TLAA Identification and Disposition Consistent with NUREG-1800 and NEI 95-10
  - TLAAs Dispositioned in Accordance with 10 CFR 54.21(c)(1)

ENERGY NORTHWEST

License Renewal Application

- 71 License Renewal Commitments
- Commitment Tracking System
  - Ensures changes to implementing procedures and programs reviewed for License Renewal impact
- Commitments Include:
  - Existing programs credited for the period of extended operation (PEO)
  - New programs, inspections, and enhancements to be completed prior to and during the PEO

ENERGY NORTHWEST

License Renewal Application

- Implementation
  - Industry Benchmarking for Lessons Learned
  - Participation in NEI License Renewal Implementation Working Group
  - Self-Assessments/Audits
  - Implementation Project Road Map Under Development

ENERGY NORTHWEST

SER Open Items

ENERGY NORTHWEST

SER Open Items

- High-Voltage Porcelain Insulators
- Operating Experience
- Upper-Shelf Energy
- Metal Fatigue
- Core Plate Rim Hold-Down Bolts
- Fatigue Analysis of Polar Crane

ENERGY NORTHWEST

SER Open Items

- <u>OI 3.0.3.3.7</u>

  High-Voltage Porcelain Insulators

  The 230 kV Station Blackout recovery source insulators at Ashe substation were not included in the LRA insulators Aging Management Program (AMP)

  <u>Resolution</u>

  – Insulators are now in program
  – Tests conclude minimal accumulation and within limits
  – Testing on 8 year frequency consistent with operating experience
  – Response submitted August 18, 2011

ENERGY NORTHWEST

SER Open Items

- <u>OI B.1.4-1</u>

  Operating Experience (OE)

  Future operating experience evaluations for aging effect were not specifically included in the LRA

  <u>Resolution</u>

  – LRA to be updated to clearly call out intent to review OE on an on-going basis
  – Internal/external OE considered on an ongoing basis
  – Operating Experience program documentation to specifically address aging effects
  – Initial/recurring training for plant staff
  – Response to be provided in November

ENERGY NORTHWEST

SER Open Items

- <u>OI 4.2-1</u>

  Upper-Shelf Energy (USE)

  Technical basis not provided for initial transverse USE and copper content for instrument nozzle forgings

  <u>Resolution</u>

  – Technical basis to be provided in November

  – Supports acceptability through end of period of extended operation

ENERGY NORTHWEST

SER Open Items

- <u>OI 4.3-1</u>

  Metal Fatigue

  Columbia's metal fatigue Time Limited Aging Analysis (TLAA) performed for sample of critical locations listed in NUREG/CR-6260 may not be limiting

  <u>Resolution</u>

  – The limiting locations have been identified

  – Calculations conclude that all locations have an environmental cumulative usage factor below 1.0

  – Response to be provided in November

ENERGY NORTHWEST

SER Open Items

- <u>OI 4.7.4-1</u>

  Lower Core Plate Rim Hold-Down Bolts

  Neither TLAA nor AMR line item for the reactor pressure vessel lower core plate hold-down bolts were provided

  <u>Resolution</u>

  – LRA will be amended to include:
    - AMR line item for TLAA
    - TLAA disposition for 10 CFR 54.21(c)

  – Response to be provided in November

ENERGY NORTHWEST

SER Open Items

- <u>OI 4.7.5-1</u>

  Fatigue Analysis of Polar Crane

  Columbia's LRA did not include TLAA for polar crane

  <u>Resolution</u>

  – Columbia has an overhead crane but not a polar crane

  – TLAA for the 15 in-scope cranes and hoists

  – Remains valid through the end of the period of extended operation

  – Response provided October 5, 2011

ENERGY NORTHWEST

Closing Remarks

ENERGY NORTHWEST

Ashe Substation
Transformer Yard
Cooling Towers

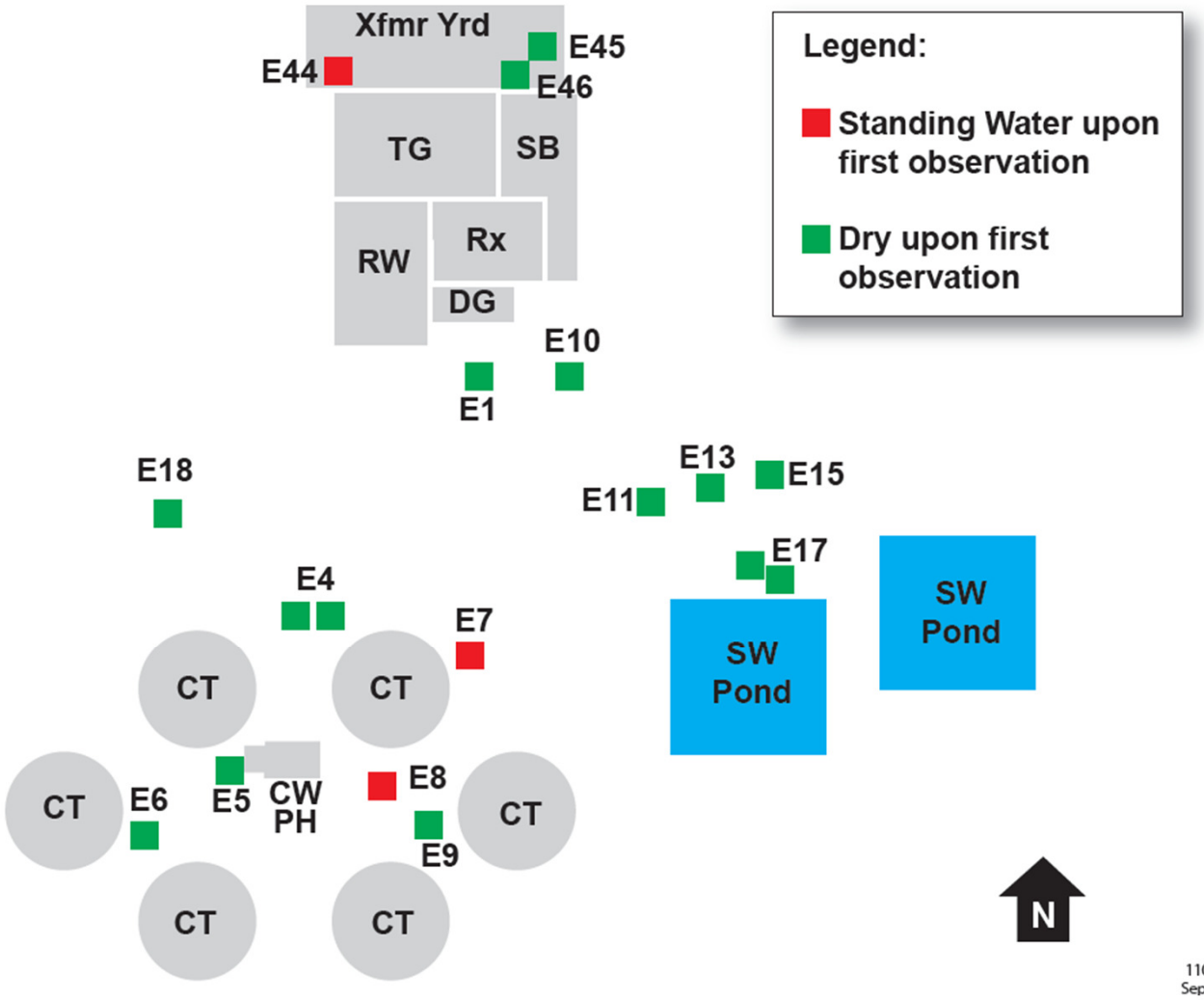

ENERGY NORTHWEST

DANGER
HIGH VOLTAGE
DANGER
HIGH VOLTAGE
4160 VOLTS
CAUTION
CAUTION
CAUTION
CAUTION
CAUTION
CAUTION
CAUTION
CAUTION

ENERGY NORTHWEST

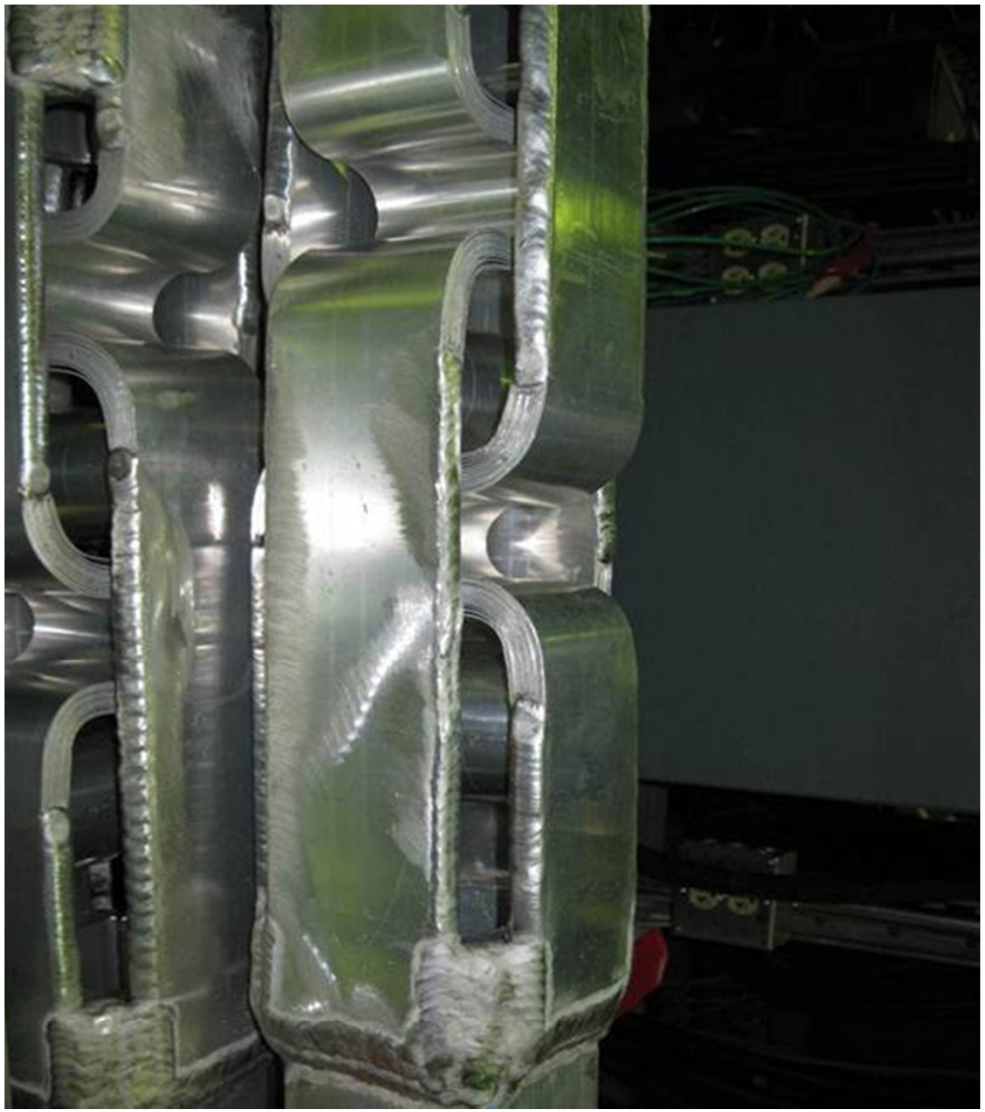

ENERGY NORTHWEST

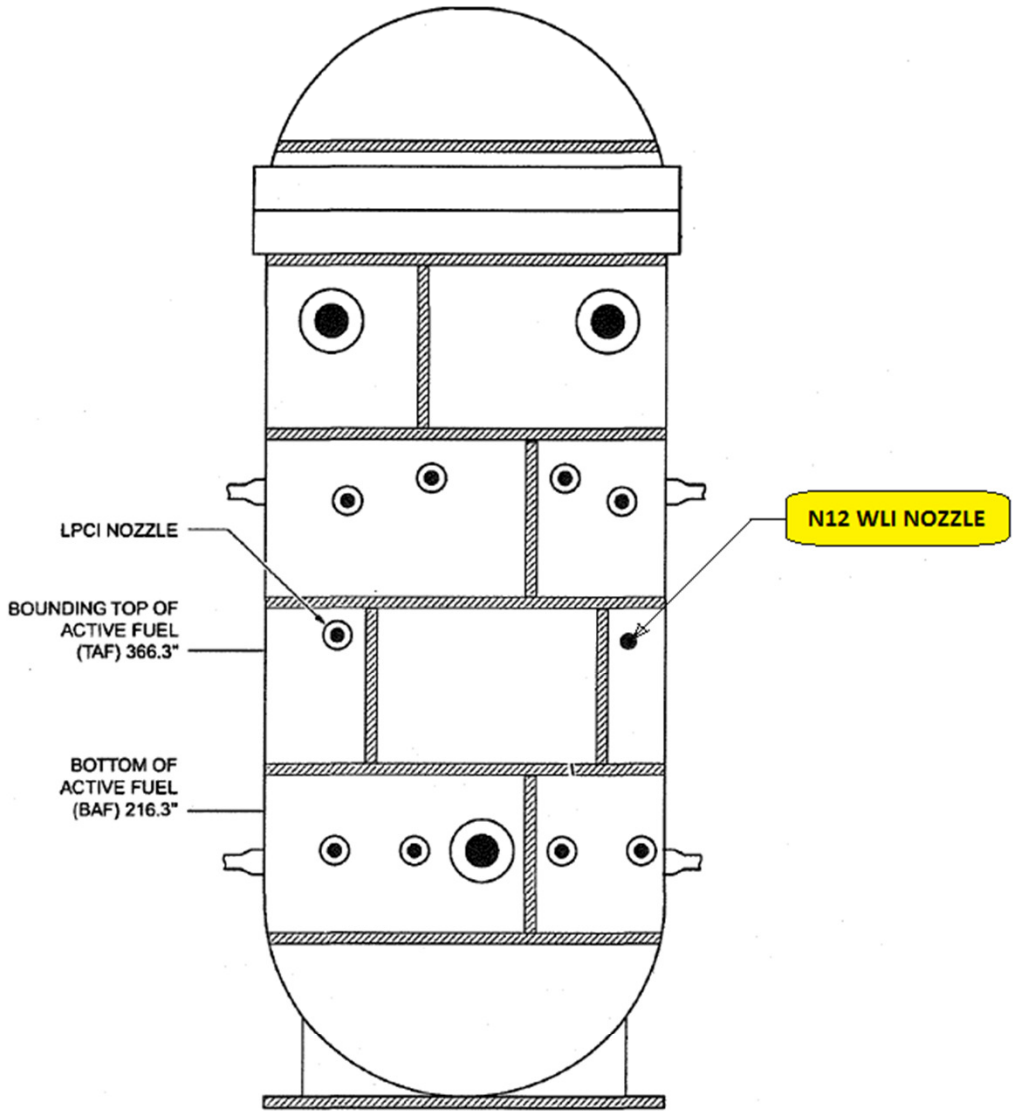

ENERGY NORTHWEST

N12 WLI Nozzle (3.32 in. dia.)

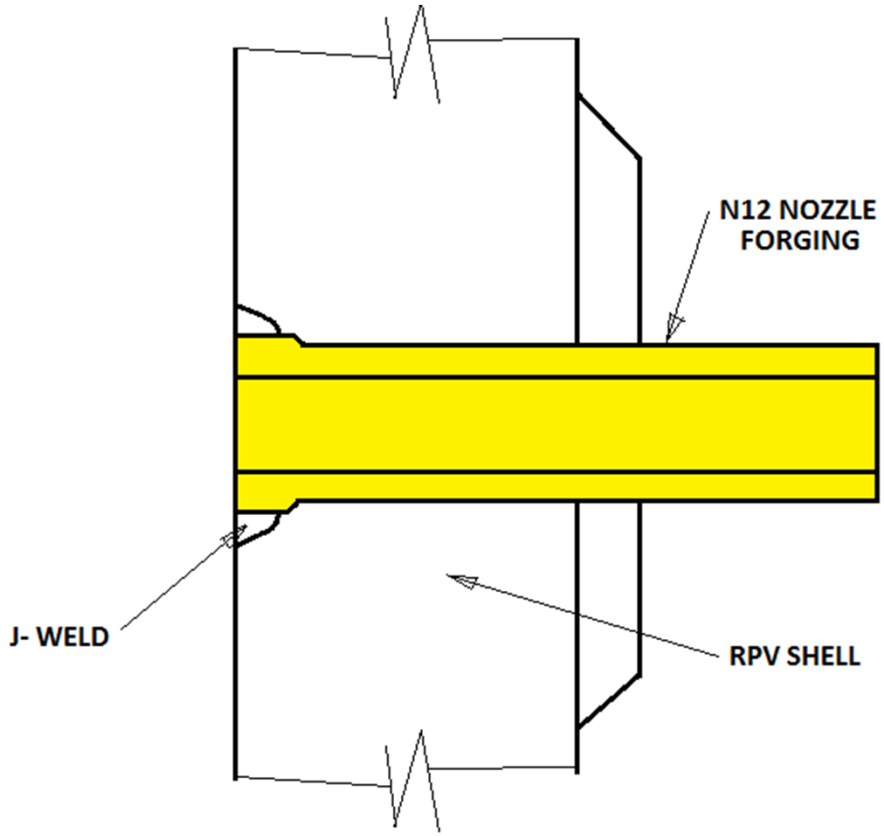

ENERGY NORTHWEST

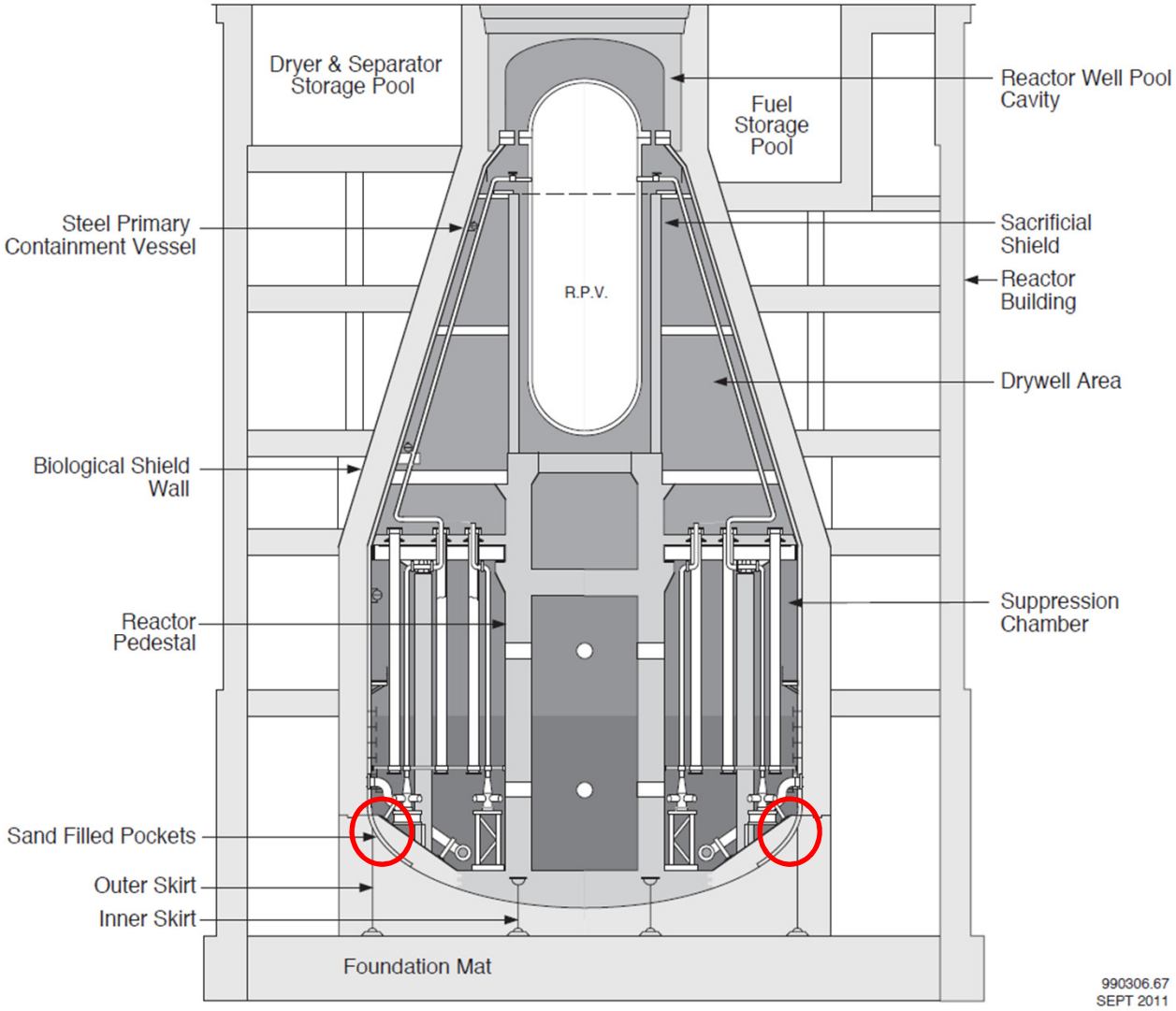

ENERGY NORTHWEST

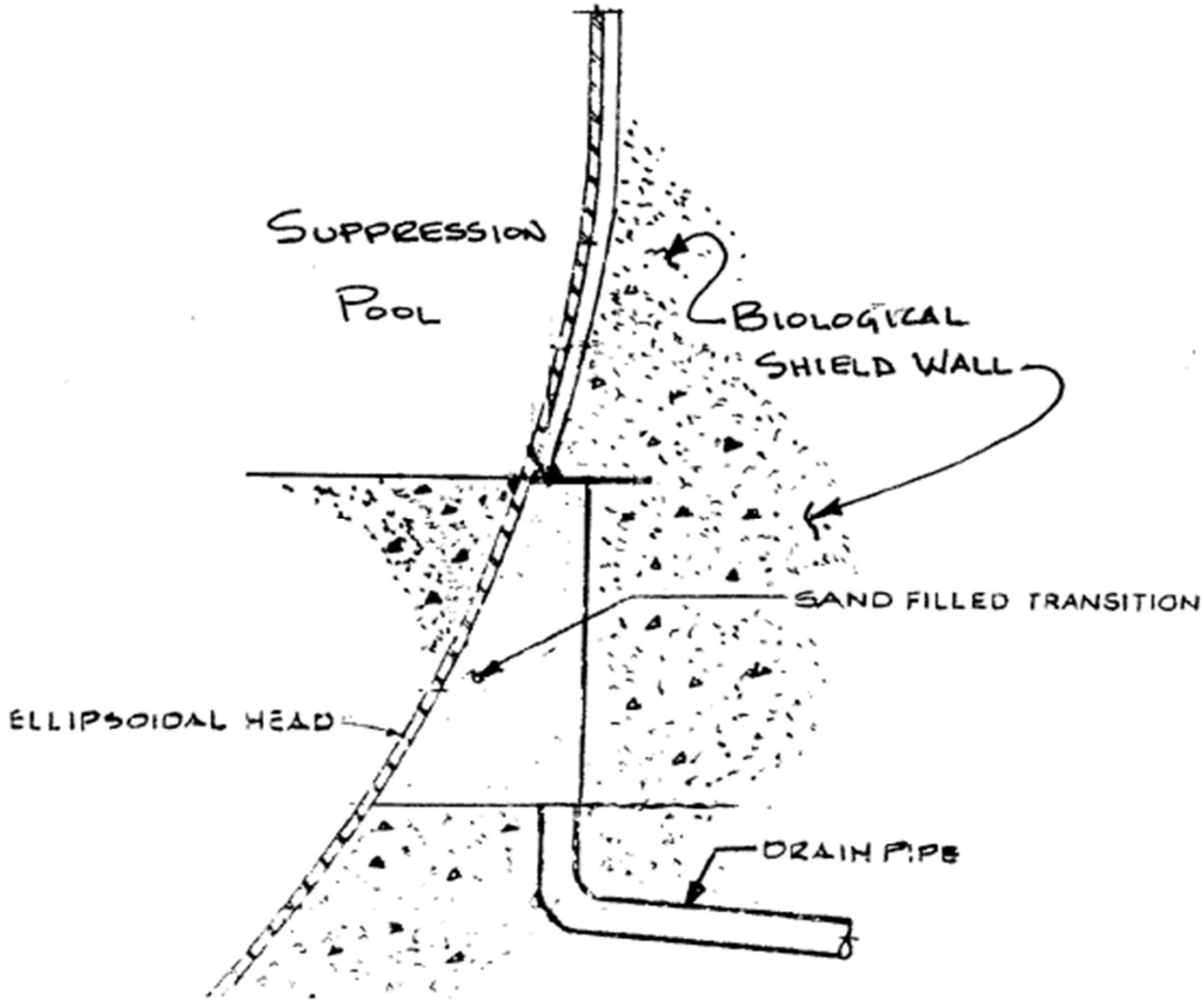

Sand Pocket Detail

ENERGY NORTHWEST

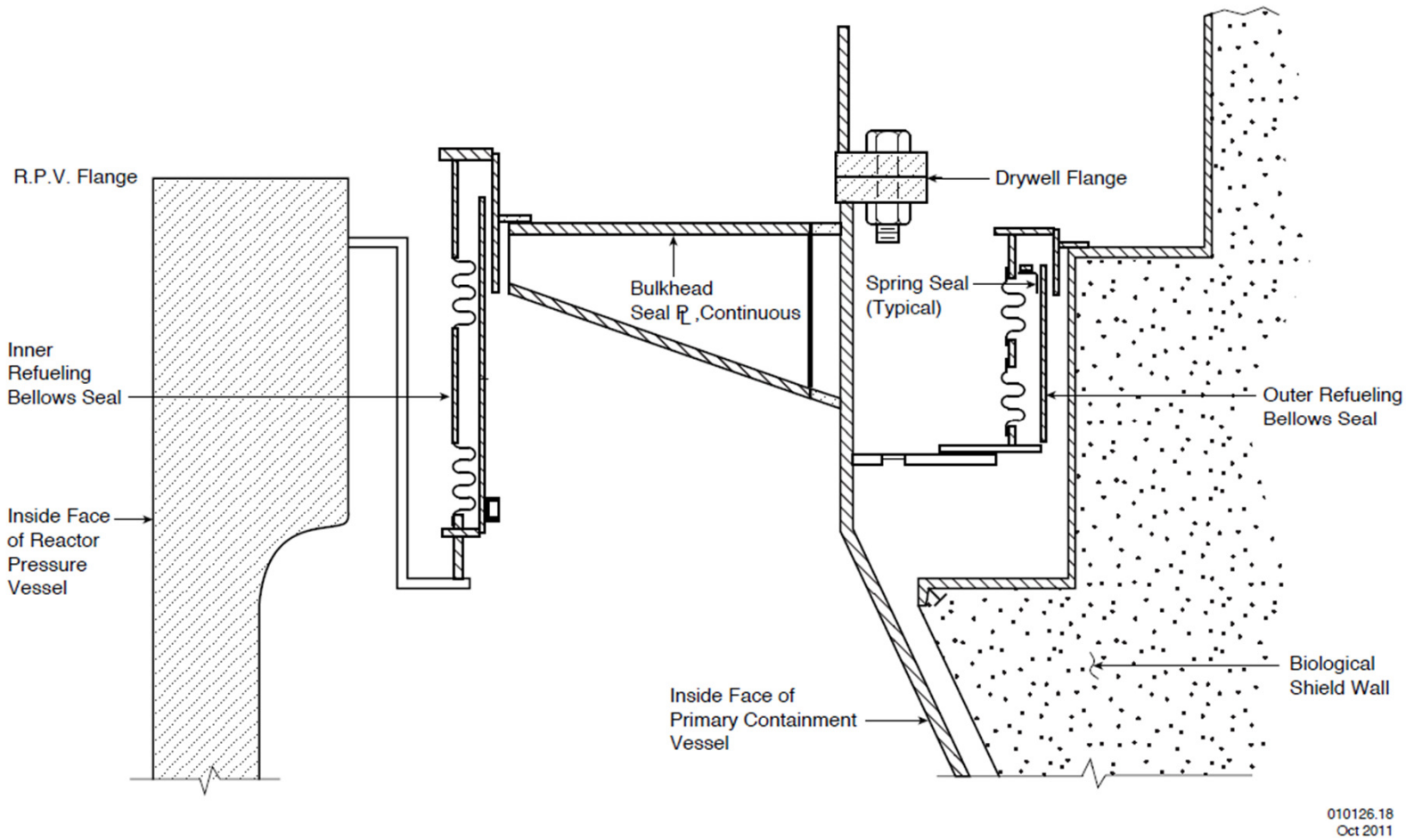

Detail of Refueling Bellows Seals

ENERGY NORTHWEST

Typical Sand Pocket Drain Line

ENERGY NORTHWEST

Typical PCV Inspection Port

ENERGY NORTHWEST

United States Nuclear Regulatory Commission

Protecting People and the Environment

Advisory Committee on Reactor Safeguards (ACRS) License Renewal Subcommittee

Columbia Generating Station (Columbia)

Safety Evaluation Report (SER) with Open Items

October 19, 2011

Arthur Cunanan, Project Manager

Office of Nuclear Reactor Regulation

Presentation Outline

- Overview of Columbia license renewal review
- SER Section 2, Scoping and Screening review
- Region IV License Renewal Inspection review
- SER Section 3, Aging Management Programs and Aging Management Review Results
- SER Section 4, Time-Limited Aging Analyses (TLAAs)

Overview

- License Renewal Application (LRA) submitted January 19, 2010
  - Applicant: Energy Northwest (EN)
  - Facility Operating License No. NPF-21 requested renewal for a period of 20 years beyond the current license date of December 20, 2023
- Approximately 12 miles north of Richland, WA
- BWR with a Mark II containment

Audits and Inspections

- Scoping and Screening Methodology Audit
  - May 10-13, 2010
- Aging Management Program (AMP) Audits
  - May 24-28, 2010
- Region IV Inspection (Scoping and Screening & AMPs)
  - October 18, 2010 – November 4, 2010

Overview (SER)

- Safety Evaluation Report (SER) with Open Items issued August 30, 2011

- SER contains 6 Open Items (OI):
  - Operating Experience
  - Metal Fatigue
  - Core Plate Rim Hold-Down Bolts
  - High-Voltage Porcelain Insulators
  - Upper-Shelf Energy
  - Fatigue Analysis of Polar Crane

SER Section 2 Summary

Structures and Components Subject to Aging Management Review

- Section 2.1, Scoping and Screening Methodology
  - Methodology is consistent with the requirements of 10 CFR 54.4 and 54.21
- Section 2.2, Plant-Level Scoping Results
  - Systems and structures within the scope of license renewal are appropriately identified in accordance with 10 CFR 54.4
- Sections 2.3, 2.4, 2.5 Scoping and Screening Results
  - SSCs within the scope of license renewal are appropriately identified in accordance with 10 CFR 54.4(a), and those subject to an AMR in accordance with 10 CFR 54.21(a)(1)

U.S.NRC

United States Nuclear Regulatory Commission

Protecting People and the Environment

License Renewal Inspections

Greg Pick

Region IV Inspection Team Leader

Regional Inspections

Overview

- Six inspectors for 2 weeks
- Scoping & screening inspection
- Aging management programs inspection

AMP Inspection Results

- One-Time Inspections - applicant misapplied use of one-time program in six cases
- Structures Monitoring - no administrative mechanism to trend structural indications
- Chemistry Program Effectiveness - committed to revise sample sizes to meet GALL, Revision 2

Regional Inspections

AMP Inspection Results

- High Voltage Insulators – improperly excluded 230kV insulators from aging management activities
- Buried Piping – reliability issues exist with portions of the cathodic protection system
- Lube Oil Analysis – identified implementation weaknesses
- Various Programs – identified a need for training on how to assess aging effects

Additional Inspection Issue

Assessed a reactor building crack after review of plant operating experience in Structural Monitoring AMP:

- Impact of moisture on the crack
- Ability to withstand seismic forces

Regional Inspections

Inspection Conclusions

- Scoping of non-safety SSCs and application of the AMPs to those SSCs were acceptable
- Reasonable assurance exists that aging effects will be managed and intended functions maintained

Section 3: Aging Management Review

- Section 3.0 – Aging Management Programs
- Section 3.1 – Reactor Vessel & Internals
- Section 3.2 – Engineered Safety Features
- Section 3.3 – Auxiliary Systems
- Section 3.4 – Steam and Power Conversion System
- Section 3.5 – Containments, Structures and Component Supports
- Section 3.6 – Electrical and Instrumentation and Controls System

SER Section 3

3.0.3 – Aging Management Programs

55 Aging Management Programs (AMPs) presented by applicant and evaluated in the SER

	Consistent with GALL	Consistent with exception	Consistent with enhancement	With exception & enhancement	Plant Specific
Existing (35)	15	3	10	1	6
New (20)	10	3			7

SER Section 3

Several one time inspection programs were revised to plant specific periodic inspection programs:

- Cooling Units Inspection
- Diesel-Driven Fire Pumps Inspection
- Diesel Systems Inspection
- Flexible Connection Inspection
- Monitoring and Collection Systems Inspection
- Service Air System Inspection
- Small Bore Class 1 Piping Program

SER Section 3 Open Items

SER Section 3.0.2.1 – Operating Experience

<u>OI B.1.4-1</u>

- Details of future operating experience to ensure AMPs will remain effective for managing the aging effects are not fully described

SER Section 3 Open Items

SER Section 3.0.3.3.7— High-Voltage Porcelain Insulators

<u>OI 3.0.3.3.7</u>

- High-voltage post insulators at the 230 kV Ashe Substation is not included in the AMP
- The applicant indicated that it would either:
  - Establish appropriate coating or cleaning tasks
  - Develop information that would demonstrate why the spray drift phenomenon would not affect the 230 kV switchyard station post insulators

SER Section 4: TLAA

- 4.1 Introduction
- 4.2 Reactor Vessel Neutron Embrittlement
- 4.3 Metal Fatigue Analysis
- 4.4 Environmental Qualification of Electrical Equipment
- 4.5 Concrete Containment Tendon Prestress Analysis (not applicable to Columbia)
- 4.6 Containment Liner Plate, Metal Containments, and Penetrations Fatigue Analysis
- 4.7 Other Plant-Specific TLAAs

SER Section 4 Open Items

SER Section 4.3 – Metal Fatigue

<u>OI 4.3-1</u>

- Addressed the effects of the coolant environment on component fatigue life on a sample of critical components identified in NUREG/CR-6260

- The applicant's plant-specific configuration may contain additional locations that need to be analyzed other than those identified in NUREG/CR-6260

SER Section 4 Open Items

SER Section 4.7.4 – Core Plate Rim Hold-Down Bolts

<u>OI 4.7.4-1</u>

- Contrary to the original LRA the plant does not have core plate wedges
- The applicant had not selected one of the three options of 10 CFR 54.21(c)(1) to demonstrate its evaluation of the TLAA
- No AMR line item for the core plate rim hold-down bolts
- The applicant submitted a deviation from BWRVIP-25 inspection guidelines, which could result in inadequate management of the aging effect

SER Section 4 Open Items

SER Section 4.2.2 – Upper-Shelf Energy

<u>OI 4.2-1</u>

Applicant projected upper shelf energy (USE) for the N12 nozzle forgings to 54 EFPY, but did not justify:

- The initial USE of 62 ft-lbs
- The copper content of 0.27 percent

Staff needs to verify acceptability of applicant assumptions to assess applicant's analysis that the USE for the N12 nozzle will remain > 50 ft-lbs at the end of vessel life

SER Section 4 Open Items

SER Section 4.1.2.9 – Fatigue Analysis of Polar Crane

<u>OI 4.7.5-1</u>

- The applicant stated that the analysis for the crane does not meet the definition of a TLAA

- Crane is designed to CMAA No. 70, which has a design limit on the number of lifts. Therefore, the staff believes it meets the definition of a TLAA

Conclusion

On the basis of its review and pending satisfactory resolution of the open items, the staff will be able to determine that the requirements of
10 CFR 54.29(a) have been met for the license renewal of Columbia Generating Station

Backup Slides

U.S.NRC
United States Nuclear Regulatory Commission
Protecting People and the Environment

Columbia's Onsite and Offsite Power

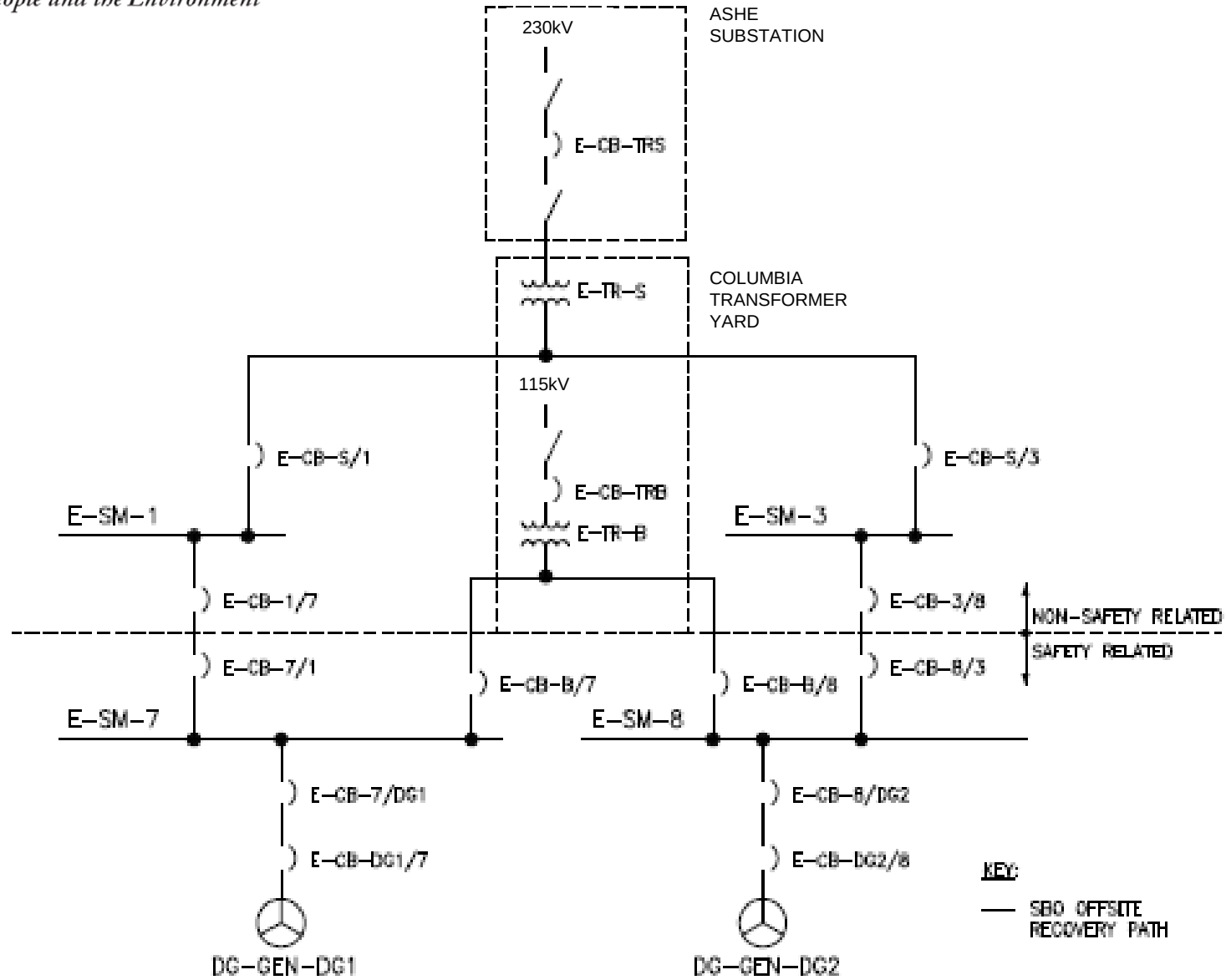

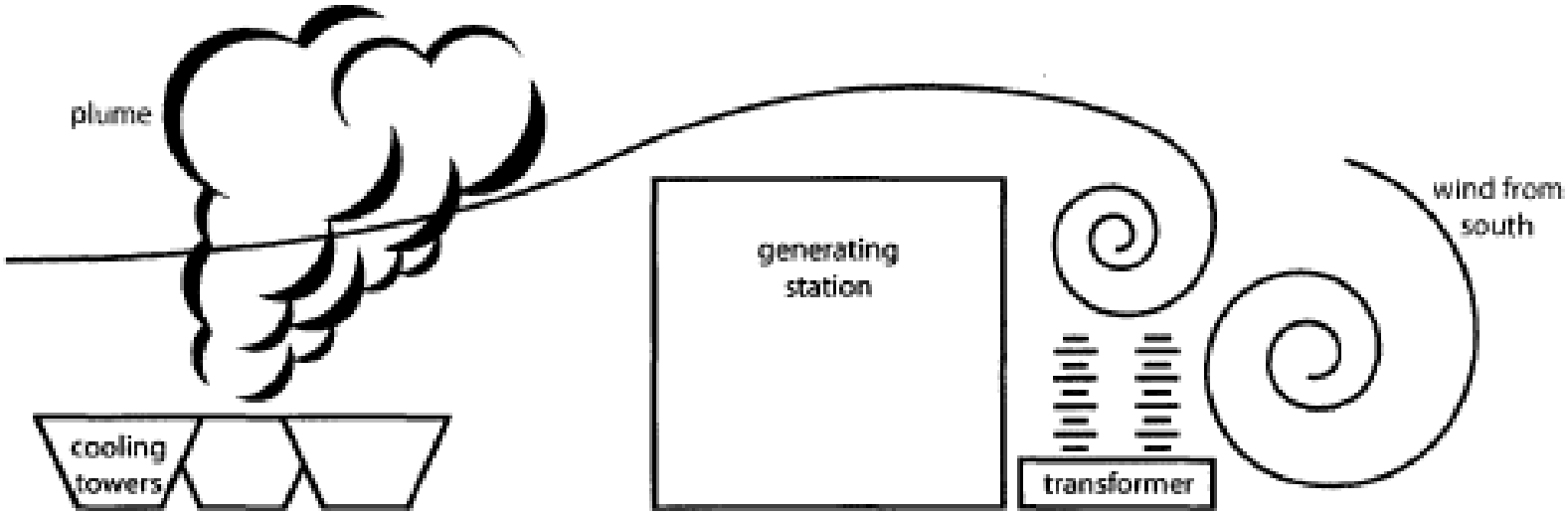

Figure 1: Droplet fallout settling on transformer yard

U.S.NRC
United States Nuclear Regulatory Commission

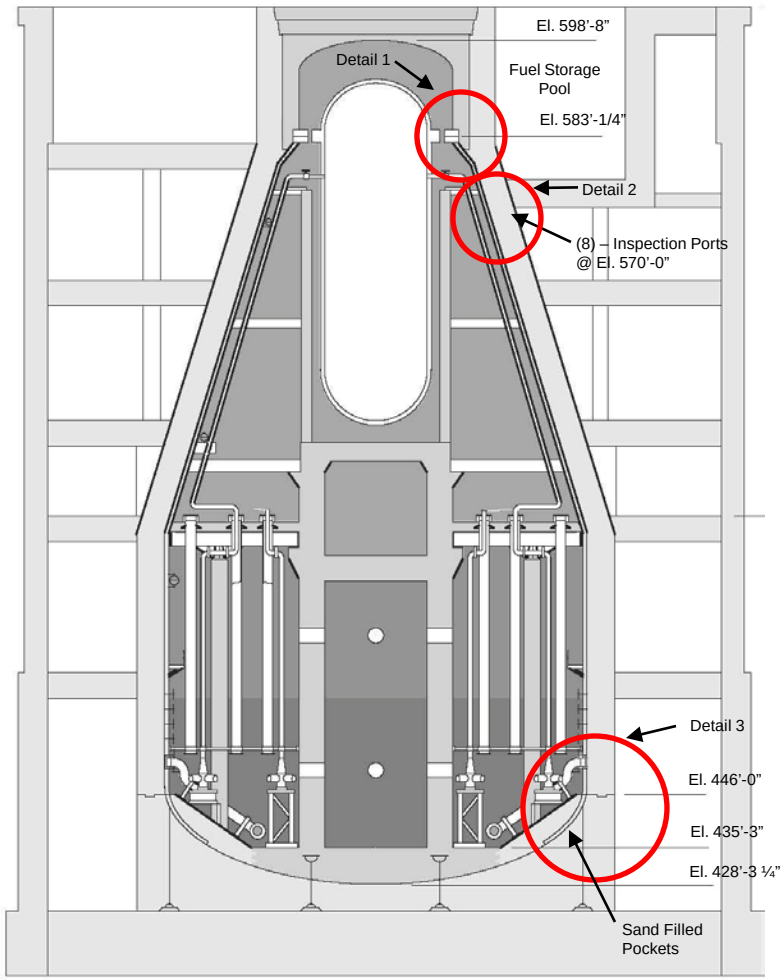

Containment Structure

Detail 1 - Inspection Port Drywell

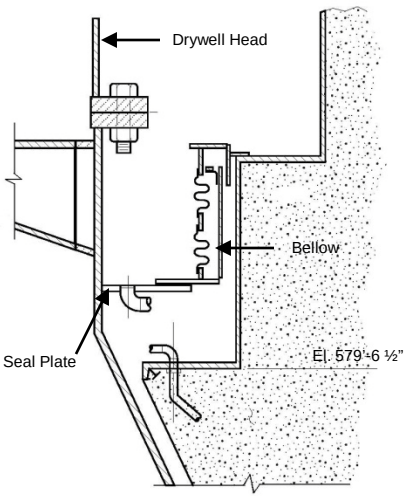

Detail 2 - Refueling Bellows Seal

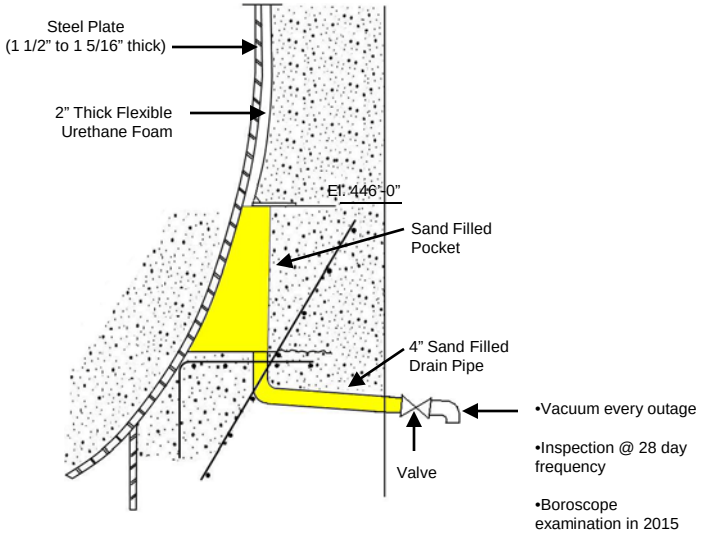

Detail 3 - Sand Drain and Closure