REGULATORY INFORMATION DISTRIBUTION SYSTEM (RIDS)

ACCESSION NBR:8102050486 DOC.DATE: 81/01/30 NOTARIZED: NO DOCKET #
FACIL:50-263 Monticello Nuclear Generating Plant, Northern States 05000263
AUTH.NAME AUTHOR AFFILIATION
MAYER,L.O. Northern States Power Co.
RECIP.NAME RECIPIENT AFFILIATION
Office of Nuclear Reactor Regulation, Director

SUBJECT: Forwards analysis of adequacy of station electric distribution sys voltages,per NRC 790808 request.Certain mods under consideration to assure that essential bus voltages are acceptable.

DISTRIBUTION CODE: A015S COPIES RECEIVED:LTR 1 ENCL 40 SIZE: 26
TITLE: Onsite Emergency Power Systems

NOTES:

	RECIPIENT ID CODE/NAME		COPIES LTTR	COPIES ENCL	RECIPIENT ID CODE/NAME		COPIES LTTR	COPIES ENCL
ACTION:	IPPOLITO,T.	04	7	7				
INTERNAL:	AEOD		1	1	GEN ISSUES BR13		1	1
	I&C SYS BR	09	1	1	I&E	06	2	2
	MPA	18	1	1	NRC PDR	02	1	1
	OELD	17	1	1	OP EX EVAL BR11		1	1
	OR ASSESS BR	12	1	1	POWER SYS BR 14		1	1
	REG FILE	01	1	1				
EXTERNAL:	ACRS	16	16	16	LPDR	03	1	1
	NSIC	05	1	1				

P

FEB 06 1981

TOTAL NUMBER OF COPIES REQUIRED: LTTR 37 ENCL 37

NSP

NORTHERN STATES POWER COMPANY

MINNEAPOLIS, MINNESOTA 55401

January 30, 1981

Director of Nuclear Reactor Regulation
US Nuclear Regulatory Commission
Washington, DC 20555

MONTICELLO NUCLEAR GENERATING PLANT
Docket No. 50-263 License No. DPR-22

Analysis of Adequacy of Station Electric Distribution System Voltages

In a letter dated August 8, 1979 from Mr William Gammill, Acting Assistant Director for Operating Reactors Projects, Division of Operating Reactors, USNRC we were requested to review the acceptability of the Monticello station electric distribution system with regard to both (1) potential for overloading due to transfers of loads, and (2) potential starting transient problems when supplied from the available off-site sources.

The requested analysis has now been completed and is attached. As noted in the analysis, certain modifications are under consideration to provide additional assurance that essential bus voltages are acceptable when using off-site power.

Please contact us if you have any questions related to this analysis.

L. O. Mayer

L O Mayer, PE
Manager of Nuclear Support Services

LOM/DMM/jh

cc J G Keppler
G Charnoff
NRC Resident Inspector

Attachment

A015
S
1/40

1981 FEB 5 PM 9 43

RECEIVED DISTRIBUTION SERVICES UNIT

8102050486
P

Attachment
Director NRR, .USNRC
January 30, 1981

NORTHERN STATES POWER COMPANY
MONTICELLO NUCLEAR GENERATING PLANT

ANALYSIS OF ADEQUACY OF STATION ELECTRIC DISTRIBUTION SYSTEM VOLTAGES

1. Summary and Conclusions

This analysis was prepared in response to a letter dated August 8, 1979 from Mr William Gammill, Acting Assistant Director for Operating Reactors Projects, Division of Operating Reactors, USNRC. We were requested to:

1. Review our electric power systems to determine if, under extreme conditions, they have sufficient capacity and capability to automatically start as well as operate all required safety loads within their required voltage ratings.

2. Show that our undervoltage protection is designed so as not to cause voltage in excess of maximum or spurious separations of the on-site distribution system from off-site sources.

3. Determine if any potential exists for violation of GDC-17 with regard to the simultaneous or consequential loss of both required circuits to the off-site network.

On September 17, 1976 Northern States Power company submitted the results of an analysis of safeguards bus voltages under various grid conditions. Undervoltage protection devices were installed during the 1978 refueling outage as required by a letter dated June 3, 1977 from Mr Don K Davis, Acting Chief, Operating Reactors Branch #2, Division of Operating Reactors, USNRC. The analysis required by Mr Gammill's August 8, 1979 letter goes significantly beyond the analysis reported in our September 17, 1976 submittal. An analysis satisfying the requirements of Mr Gammill's letter has now been completed and the results are presented in detail in this report.

In the case of one of the off-site sources (the 1R transformer), shedding of nonessential (cooling tower) loads and delayed starting of the 480 volt diesel generator room ventilation fans was assumed though this is not a current feature of our design. The methods used in this analysis were quite sophisticated in a relative sense, however they were conservative and unrealistic. Using these methods it could not be shown that voltages would be acceptable if these loads were not shed and delayed respectively. If the testing to be performed in verifying the results of this analysis confirms that such actions are indeed necessary, the shedding of cooling tower loads on ECCS actuation and the delayed starting of the diesel generator room ventilation fans will be made a permanent, automatic feature of our electric power system. Until this matter is resolved we are issuing interim operating instructions to perform these actions manually.

In the analysis of the maximum voltage condition no load was assumed on plant buses. The voltages calculated by this method appeared higher than necessary when using the 1AR transformer and additional cases were calculated assuming lowered tap settings for this transformer. Both the maximum and minimum voltage analysis was repeated for these assumed tap

settings and results are presented. This change to the tap settings of the 1AR transformer will be made during the next refueling outage.

Using the above assumptions, this report demonstrates that:

1. Transformer loading is acceptable
2. Station distribution system voltages remain acceptable under minimum and maximum expected values of grid voltage for motor starting and running
3. Undervoltage protection circuitry is not challenged with minimum expected values of grid voltage

We can see no potential for violation of GDC-17 with respect to the simultaneous or consequential loss of both required circuits to the off-site network.

2. Description of Station Electric Distribution System and Off-site Sources

2.1 Essential Buses

All station power is supplied by the 4.16 KV station auxiliary system. Large motors are supplied directly from this system. Other loads are supplied indirectly through transformers, motor generators, or battery systems charged from the ac distribution system.

There are two essential 4.16 KV buses. These are the buses numbered 15 and 16. One division of safety related equipment is powered from each of these buses.

2.2 Off-site Sources

There are two primary sources of power for the 4.16 KV distribution system. One source is No. 11 auxiliary transformer which is connected to the main generator. A second source is No. 1R reserve transformer which is powered from the 115 KV substation. No. 11 transformer is used during normal plant operation. When the unit is shutdown No. 1R transformer is used.

The essential buses, 15 and 16, can be supplied by two additional sources of power to assure reliability. One source is No. 1AR transformer which is connected to a 13.8 KV tertiary winding on No. 10 substation transformer. The second source is one diesel generator for each essential bus. The 1AR transformer or the diesel generators can supply all safety related loads in the event of loss of normal off-site sources.

The scope of this analysis is limited to the off-site sources available to the essential buses in the event of a unit trip, the 1R and 1AR transformers. A one line diagram showing the arrangement of the Monticello station auxiliary system and substation is provided in Figures 1 and 2.

Table 1 summarizes the ratings of transformers involved in supplying off-site power to the essential buses. Table 2 summarizes the loads on each of the buses. Impedances are shown on Figure 3.

2.3 Auxiliary Power Transfer

Two automatic transfer schemes control the transfer of station auxiliary power from No. 11 transformer to the 1R transformer. A closed circuit transfer occurs upon actuation of the turbine lockout relay if substation breakers 8N4 and/or 8N5 are closed, the generator lockout relay is not tripped, and if the generator negative sequence relay is not tripped.

An open circuit transfer occurs for either of the following:

1. Actuation of the generator lockout relay
2. Actuation of the generator negative sequence relay combined with a turbine lockout

This prevents closing the 1R transformer onto a fault.

Both automatic transfers will also start the diesel generators and trip the reactor recirculation pump MG drive motor breakers.

2.4 Essential Bus Transfer

Essential buses 15 and 16 are provided with two transfer schemes, one of which controls automatic transfer to the 1AR transformer and another which controls automatic transfer to the associated diesel generator. Bus transfer logic setpoints are summarized on Table 3.

2.4.1 Transfer to the 1AR Transformer

Transfer to the 1AR transformer is initiated by automatic opening of all 4.16 KV source breakers to the essential bus combined with either one of the following:

1. Loss of voltage on the low side of the 1R transformer
2. Loss of voltage on the essential bus which persists for greater than five seconds

If the 1AR breaker control switch is in "auto", voltage is present on the 1AR secondary, and transfer to the diesel generator has not been initiated (see 2.4.2 below), transfer to the 1AR will occur.

Essential bus supply breakers 308 or 408 are automatically tripped, thereby initiating transfer, if both supply breakers to the associated bus (13 or 14) are open for five seconds or more. Loss of voltage on an essential bus for five seconds will also trip the associated supply breaker thereby initiating transfer.

The transfer relays in this scheme will strip the 4.16 KV essential bus of all loads except the associated 480 volt load center and will also strip that load center of all non-essential motor control centers (MCC's). Concurrently, these relays initiate a 15-cycle-delayed closure of the 1AR supply breaker to the essential bus.

2.4.2 Transfer to the Diesel Generator

Transfer to the associated diesel generator is initiated by the automatic opening of all 4.16 KV source breakers to the essential bus combined with any one of the following:

1. Loss of voltage on the low side of the 1AR transformer
2. Loss of voltage on the essential bus which persists for greater than 10 seconds
3. Degraded voltage on the essential bus (less than 3885 volts for greater than 10 seconds)

NOTE: A loss of voltage automatically blocks action by the degraded voltage logic

A low voltage (< 3885 volts) does not initiate a transfer until it has persisted for greater than 10 seconds. Only then is it considered to indicate a true degraded voltage condition.

If a diesel generator 4.16 KV breaker control switch is in "auto" and diesel generator voltage is within 10% of rated, transfer to the diesel generator will be initiated.

In addition to the breaker tripping logic for 308 and 408 discussed in 2.4.1 above, breakers 308 and 511 or 408 and 610 are tripped by a loss of voltage on their associated essential buses lasting ten or more seconds or by a degraded voltage condition (3885 volts for ten seconds). Breakers 511 and 610 are also tripped by a loss of voltage on the secondary of the 1AR transformer.

The transfer relays in this scheme will strip the 4.16 KV essential bus of all loads except the associated 480 volt load center and will also strip that load center of all non-essential MCC's. Concurrently these relays initiate a 15-cycle-delayed closure of the diesel generator supply breaker. However, additional logic also assures that the diesel generator breaker is not closed until the diesel generator is ready to accept load.

Automatic starting of the diesel generators occurs on operation of lockout relays for the turbine, generator, 1R transformer, or 1AR transformer; loss of voltage on the essential buses; low voltage on the 1AR secondary; opening of normal essential bus supply breakers; or an ECCS actuation signal.

2.4.3 ECCS Load Shedding

If power to an essential 4.16 KV bus is not being supplied by it's normal source (i.e. bus 13 or bus 14) and if the Core Spray system is initiated, relays within the Core Spray logic will act to shed loads from the essential 4.16 KV and 480V buses. In the case of the 4.16 KV equipment this shedding is redundant to that performed during the bus transfers described above. In the case of the 480V equipment this shedding is unique to the ECCS load shedding scheme. Loads are locked out as long as both RHR pumps on the essential bus in question are running and the bus is not being supplied by its normal source.

The loads which are shed by this scheme are as follows:

Instrument and Service Air Compressor
Control Rod Drive Pumps
Drywell Cooling Recirc Fans
Residual Heat Removal (RHR) Service Water Pumps
Fuel Pool Cooling Pump
Service Water Pump
Reactor Building Closed Cooling Water Pump

2.4.4 Automatic Sequencing of ECCS Loads

If power to an essential 4.16 KV bus is not being supplied by its normal source and if there is an ECCS initiation, the starting of the RHR and Core Spray pumps on that bus will be delayed to limit the maximum motor starting load. The time delays employed are as follows:

Time	Essential Bus 15	Essential Bus 16
5 seconds	RHR Pump A	RHR Pump B
10 seconds	RHR Pump C	RHR Pump D
15 seconds	Core Spray Pump A	Core Spray Pump B

These time delays are started at the moment these pumps would otherwise normally be signaled to start.

3. Analysis of Minimum Voltage Condition

3.1 Substation Voltages

For evaluation of minimum voltage levels at the Monticello substation the worst anticipated system conditions were considered coincident with a trip of the Monticello unit. These conditions would involve NSP being in a peak load condition purchasing maximum power from Canada. For the 1980 summer condition this would put NSP's net power import at 1000 MW under worst case conditions. Power flow studies were performed by the NSP Power Supply Planning Department under these conditions using the following assumptions:

1. 1300 MW import from Manitoba Hydro to US (1000 MW to NSP)
2. Peak load condition.
3. Capacitor banks - 1045 MVAR added on internal Metropolitan area 115 KV system.
4. Generation at 345 KV substations regulating the 345 KV voltage at 1.017 pu.
5. Trip of Monticello unit with loss of 530 MW.
6. Tap changer on No. 10 transformer fixed at pre-trip setting (assumed to react too slowly to assist in regulation).

These conditions simulate a normal summer peak situation with NSP receiving import from Manitoba Hydro. This is the most pessimistic system condition expected to be seen prior to a unit trip at Monticello.

System load flow calculations yielded the following minimum expected system voltages at the Monticello substation under the above conditions:

	Before Trip	After Trip
115 KV Substation	1.041% (119.7 KV)	1.038% (119 KV)
345 KV Substation	1.017% (350.8 KV)	1.015% (350 KV)

It should be noted that the Monticello plant is located at a particularily strong point in the NSP System with the Sherburne County Generating Plant (two 700 MW coal fired units) located across the Mississippi River. Loss of the Monticello unit has little effect on the system.

3.2 Safeguards Distribution System Minimum Voltages

Using the above system model, load flow calculations were performed to determine voltage available at all points in the safeguards distribution system. Except as noted below, maximum loading of plant buses was assumed with safeguards loads assumed to draw either starting or running current.

Distribution system voltages were determined for six cases. These six cases conservatively model loading conditions on the two off-site sources:

Case 1	-	Power from 1R transformer with starting of all ECCS equipment
Case 2	-	Power from 1R transformer with 4.16 KV ECCS equipment up to speed and 480V equipment starting.
Case 3	-	Power from 1R transformer with ECCS equipment running
Case 4	-	Power from 1AR transformer with 480V ECCS equipment starting
Case 5	-	Power from 1AR transformer with 480V equipment running and 4.16 KV ECCS equipment starting
Case 6	-	Power from 1AR transformer with ECCS equipment running

Assumed loads for each case are shown on Figures 4 through 9.

3.2.1 1R Off-site Source

Cases 1, 2, and 3 represent safeguards loading using the 1R transformer. Manual transfer of the station auxiliary system from the No. 11 transformer to the 1R transformer was assumed since automatic tripping of the recirculation pumps will not take place under these conditions. Tripping of one rcirculation pump was assumed, however, since the Low Pressure Coolant Injection (LPCI) loop selection logic will trip the pump in the broken loop (Loop 12 if neither loop is broken).

Case 1 represents maximum loading of all plant buses on the 1R transformer combined with ECCS actuation. A simplifying worst-case assumption is that all ECCS loads are simultaneously drawing starting current.

Case 2 assumes that all 4 KV motors are up to speed and drawing running current. All 480 volt ECCS equipment is assumed to still be drawing starting current.

Case 3 assumes that all ECCS equipment has come up to speed using the 1R source.

In actuality, starting of the 480 V ECCS loads will be staggered throughout the period between Case 1 and Case 2 since motor contactors pickup over a wide range of voltages. By assuming in Case 1 that all 480 volt ECCS equipment is drawing starting current it is assumed that all contactors pickup simultaneously at the low end of their range. This causes calculated voltages for Case 1 to be lower than actual and is conservative. By assuming in Case 2 that all ECCS equipment is again drawing starting current, it is assumed that all contactors pickup simultaneously at the high end of their range. This results in calculated voltages which are again lower than actual and conservative.

3.2.2 1AR Off-site Source

Case 4 represents all 480 volt ECCS equipment starting on the 1AR transformer. All non-essential loads have been shed automatically and the 4.16 KV loads have not yet been sequenced on.

Case 5 assumes that all 480 volt ECCS equipment has started and the largest 4.16 KV loads, the core spray system pumps, are starting. Both RHR pumps on each bus are assumed to be running and up to speed in order to simulate the worst loading conditon.

Case 6 assumes that all ECCS equipment has come up to speed using the 1AR source.

3.3 Evaluation of Minimum Voltage Analysis

Results are presented in Table 4. Terminal voltages have been calculated for the worst case 4160V loads, the core spray pumps. The voltages on the 480V level are presented as bus voltages, not load terminal voltages. The relatively high per unit impedance values for the cables from the MCC's to the various loads would not be accepted by the load flow computer program available to us. Terminal voltage was calculated manually for the load with the worst combination of starting current and line impedance. In this case voltage at the motor terminals rose from 77% while starting to 91% of nominal motor voltage with all ECCS equipment up to speed. For this reason we believe a detailed evaluation of terminal voltage is not justified.

It was found that the following load adjustments would result in acceptable results for Cases 1 and 2:

1. Cooling Tower loads shed reducing bus 13 and 14 loading by approximately half

2. Starting of 460 volt diesel generator room cooling fans not permitted simultaneous with other loads

The loads shown on Figures 4, 5, and 6 and the results shown on Table 4 include these additional assumptions.

3.3.1 Evaluation of Minimum Voltage Analysis - Motor Starting and Running

In all cases analyzed, loads on the essential buses will have sufficient voltage to start or run continuously as assumed by the particular case.

In Case 1, 480 volt essential bus voltage does not assure motor starting. However, as the 4.16 KV bus loads come up to speed the 480 volt bus voltage will rise to greater than 88% within 8 seconds following ECCS actuation as illustrated in Case 2. At these initial voltages the motors can be expected to accelerate to full speed.

In all cases where 480 volt MCC contactor pickup is required, voltages will be sufficient to do so either immediately following ECCS actuation or within an estimated eight seconds.*

The assumed acceptable running voltage for all ECCS motors is 90 to 110% of nameplate voltage. This is based on NEMA standards and AE and vendor specifications for motors used at Monticello.

The assumed acceptable starting voltages for 4 KV motor loads are based on the following analysis. Net torque available for accelerating the mass of the motor rotor, pump impeller, shaft and coupling of each load was found by subtracting the published speed-torque curve for the pump from the speed-torque curve for the motor at various voltages. Finding an equation for this net torque versus speed and knowing the mass to be accelerated, it was possible to integrate for average net torque over a range of speed and calculate the acceleration time assuming a given constant voltage. From these calculations it was determined that acceleration times consistently fell within the allowable stall time for the motors. In addition it was determined that the motor speed-torque curves do not intersect the pump speed-torque curves at any speed for the predicted voltages (here the net torque would drop to zero and the motor would fail to reach full speed).

Using the above information it was possible to confirm that the 4 KV motors would come up to full speed and to predict the amount of time this would take for any range of voltage.

Based on a requirement stated in our Architect-Engineer's motor specifications that "motors shall be capable of starting and accelerating the load with 80 percent voltage at the motor terminals" and considering the results of the analysis described above to have generic significance in predicting this starting capability in the Monticello design it was concluded that the voltage-time response of the essential 480 V buses, provides sufficient voltage for proper motor starting.

3.3.2 Evaluation of Minimum Voltage-Degraded Voltage Protection Setpoint

The nominal setpoint of the degraded voltage sensing relays on buses 15 and 16 is 93.4% of the nominal 4160 bus voltage. Bus voltage falls below this level only in Case 1.

*It is known that the fuses for these contactors will allow inrush current to flow for at least 25 seconds before interruption.

The nominal time delay of the degraded voltage sensing relays is ten seconds. At the voltages calculated for Case 1, the 4 KV motors will accelerate to normal speed within eight seconds and bus voltage will recover to 96.4% of nominal. The degraded voltage circuitry will therefore not initiate a transfer to the diesel generators.

3.3.3 Evaluation of Minimum Voltage - Confirmation of Analysis by Testing

The correctness of NSP load flow calculations was verified by Bechtel Corporation through independent calculation of two of the cases.

Testing will be performed during the next refueling outage when auxiliary power is supplied from off-site sources. This data will be compared to voltages calculated by the NSP load flow program to validate the model and quantify the conservatism, if possible, in the results.

4. Analysis of Maximum Voltage Condition

4.1 Substation Voltage

The worst case historical high voltage condition at the Monticello substation was experienced last spring (1980). A 500 KV transmission line from Manitoba Hydro to the NSP system was recently placed into service. During light load conditions the voltage on the 345 KV substation reached a historical high of 354 KV. Regulation of plant bus voltage during these conditions required the opening of selected transmission lines. This condition is expected to disappear as more experience is gained in operating the NSP system with the Manitoba Hydro interconnection.

The Monticello 115 KV substation voltage is regulated by the load tap changer (LTC) on No. 10 transformer. The LTC will maintain 120 KV $\pm$ 1 KV. For the purposes of this analysis, it is assumed that these voltages represent the worst case high voltages that will be experienced at the Monticello substation:

115 KV substation	-	105.2%	(121 KV)
345 KV substation	-	102.6%	(354 KV)

4.2 Safeguards Distribution System Maximum Voltages

Using the substation voltages for worst case high voltage system conditions discussed above, no load station auxiliary voltage would be:

		1R Source	1AR Source
Buses 15 and 16	-	4.37 KV	4.64 KV
480 Volt MCC's	-	504 volts	534 volts

4.3 Evaluation of Maximum Voltage Analysis - Motor Starting and Running

Using the 1R transformer source, all voltages are less than 10% above nominal motor nameplate voltage. This source is acceptable for motor starting and continuous running.

Using the high 345 KV system voltages which may be expected as a result of the new Manitoba Hydro interconnection, station distribution voltages can under no load conditions be higher than ten percent above nominal nameplate voltage when using the 1AR transformer source.

A tap change on the 1AR transformer at the Monticello plant will be made during the next refueling outage. By changing the taps from 13.3/4.33 to 14.0/4.33 the no load station auxiliary voltages with a 345 KV system voltage of 354 KV will be reduced to:

	1AR Source
Bus 15 and 16	4.40 KV (110% of 4 KV)
480 Volt MCC's	508 Volts (110% of 460 V)

Cases 4, 5, and 6 of the minimum voltage analysis discussed in Section 3.2 have been repeated using the new tap setting proposed for the 1AR transformer. Results are summarized in Table 5. The lower tap setting results in acceptable voltages under minimum grid voltage conditions.

5.0 Analysis of Transformer Loading

Transformer loading was evaluated by the computer load flow program for the six cases considered. Refer to Table 6.

As shown in this Table 6, loads calculated for Cases 3 and 6 are within the continuous ratings of the transformers shown in Table 1.

TABLE 1 MONTICELLO NUCLEAR GENERATING PLANT TRANSFORMER RATINGS

TRANSFORMER	DESCRIPTION	RATED KVA	IMPEDANCE % (100 MVA BASE)	RATIO (LINE TO LINE)
1R	1 115-KV Winding 2 4.16-KV Windings (X & Y)	37,300 @ 65°C	3.58 +j72.9 X 3.48 +j70.9 Y 0.25 +j4.99 H	115/4.16 KV
1AR	1 14.0 KV Winding 1 4.33 KV Winding	7,500 @ 55°C	6.00 +j60.9	13.3/4.33 KV
10	1 345 KV Winding 1 118 KV Winding 1 13.8 KV Tertiary Winding	280,000 @ 65°C 82,500 @ 65°C (13.8 KV Winding)	0 + j4.46 H-L 0 + j14.47 H-T	LTC Regulates to 120 ± 1 KV 345/13.8 KV
Load Centers 103 and 104 Transformers	1 4.16 KV Winding 1 480 V Winding	1,500 @ 65°	87.3 +j759	4.16/0.48 KV

TABLE 2 MONTICELLO NUCLEAR GENERATING PLANT LOAD CHARACTERISTICS

Bus	Load Description
11	Nonessential
12	Nonessential
13	Nonessential
14	Nonessential
15 or 16	RHR Service Water Pump (2/bus)
	CRD Pump
	Core Spray Pump
	RHR Pump (2/bus)
	Turbine Aux Oil Pump (Bus 15 only)
480V Load Center 103	MCC B31 MCC B32 MCC B33A* & B33B* Service Water Pump
480V Load Center 104	MCC B41 MCC B42B MCC B43A*, B43B*, & B42A* Service Water Pump Fire Pump

*Essential Motor Control Centers

TABLE 3 MONTICELLO NUCLEAR GENERATING PLANT LOAD REJECTION AND VOLTAGE RESTORATION LOGIC SETTINGS

Function	Setting (nominal and tolerance)
Loss of Voltage Detection on Bus 15 or 16	2625 ± 175 V with no intentional time delay
Degraded Voltage Detection on Bus 15 or 16	3885 ± 18 V with 10 ± 1 sec time delay
Time Delay for Transfer to 1R	No intentional time delay
Time Delay for Transfer to 1AR	5 ± 1 sec
Time Delay for Transfer to Diesel Generators	10 ± 1 sec on loss of voltage 5 ± 1 sec on degraded voltage

TABLE 4 MONTICELLO NUCLEAR GENERATING PLANT MINIMUM VOLTAGE ANALYSIS

LOCATION	VOLTAGE CASE 1	CASE 2	CASE 3	CASE 4	CASE 5	CASE 6
1R-H	1.003	1.024	1.024	NA	NA	NA
1R-X	0.940	0.962	0.962	NA	NA	NA
1R-Y	0.773	0.967	0.969	NA	NA	NA
1AR-H	NA	NA	NA	1.012	0.985	1.009
1AR-L	NA	NA	NA	1.082	0.983	1.071
Bus 11	0.937	0.959	0.959	NA	NA	NA
Bus 12	0.937	0.959	0.959	NA	NA	NA
Bus 13	0.763	0.964	0.967	NA	NA	NA
Bus 14	0.764	0.965	0.967	NA	NA	NA
Bus 15	0.763	0.964	0.967	1.081	0.973	1.069
Bus 16	0.764	0.965	0.967	1.081	0.973	1.068
Core Spray Pump A	0.751	0.962	0.965	1.081	0.962	1.067
Core Spray Pump B	0.753	0.963	0.965	1.081	0.963	1.067
TR 103-H	0.763	0.964	0.966	1.081	0.973	1.068
TR 103-L	0.676	0.904	0.917	1.036	0.962	1.059
TR 104-H	0.764	0.965	0.967	1.081	0.973	1.068
TR 104-L	0.694	0.913	0.926	1.032	0.960	1.057
LC 103	0.676	0.904	0.917	1.036	0.962	1.059
LC 104	0.694	0.913	0.926	1.032	0.960	1.057
MCC 33	0.642	0.880	0.899	0.999	0.951	1.049
MCC 43	0.666	0.892	0.912	0.996	0.948	1.046

TABLE 5 MONTICELLO NUCLEAR GENERATING PLANT MINIMUM VOLTAGE ANALYSIS
NEW 1AR TRANSFORMER TAP SETTING

LOCATION	VOLTAGE CASE 4'	CASE 5'	CASE 6'
1R-H	NA	NA	NA
1R-X	NA	NA	NA
1R-Y	NA	NA	NA
1AR-H	1.012	0.985	1.009
1AR-L	1.030	0.935	1.019
Bus 11	NA	NA	NA
Bus 12	NA	NA	NA
Bus 13	NA	NA	NA
Bus 14	NA	NA	NA
Bus 15	1.029	0.925	1.017
Bus 16	1.029	0.925	1.017
Core Spray Pump A	1.029	0.913	1.015
Core Spray Pump B	1.029	0.914	1.015
TR 103-H	1.029	0.925	1.017
TR 103-L	0.981	0.913	1.007
TR 104-H	1.029	0.925	1.017
TR 104-L	0.977	0.911	1.005
LC 103	0.981	0.913	1.007
LC 104	0.977	0.911	1.005
MCC 33	0.941	0.901	0.996
MCC 43	0.938	0.898	0.993

TABLE 6 MONTICELLO NUCLEAR GENERATING PLANT TRANSFORMER LOADING

Transformer	Load in MVA					
	Case 1	Case 2	Case 3	Case 4	Case 5	Case 6
1R - X	13.8	13.8	13.8	-	-	-
1R - Y	27.3	12.7	12.6	-	-	-
1R - Total	49.7	28.4	28.3	-	-	-
1AR	-	-	-	1.35	11.5	4.06

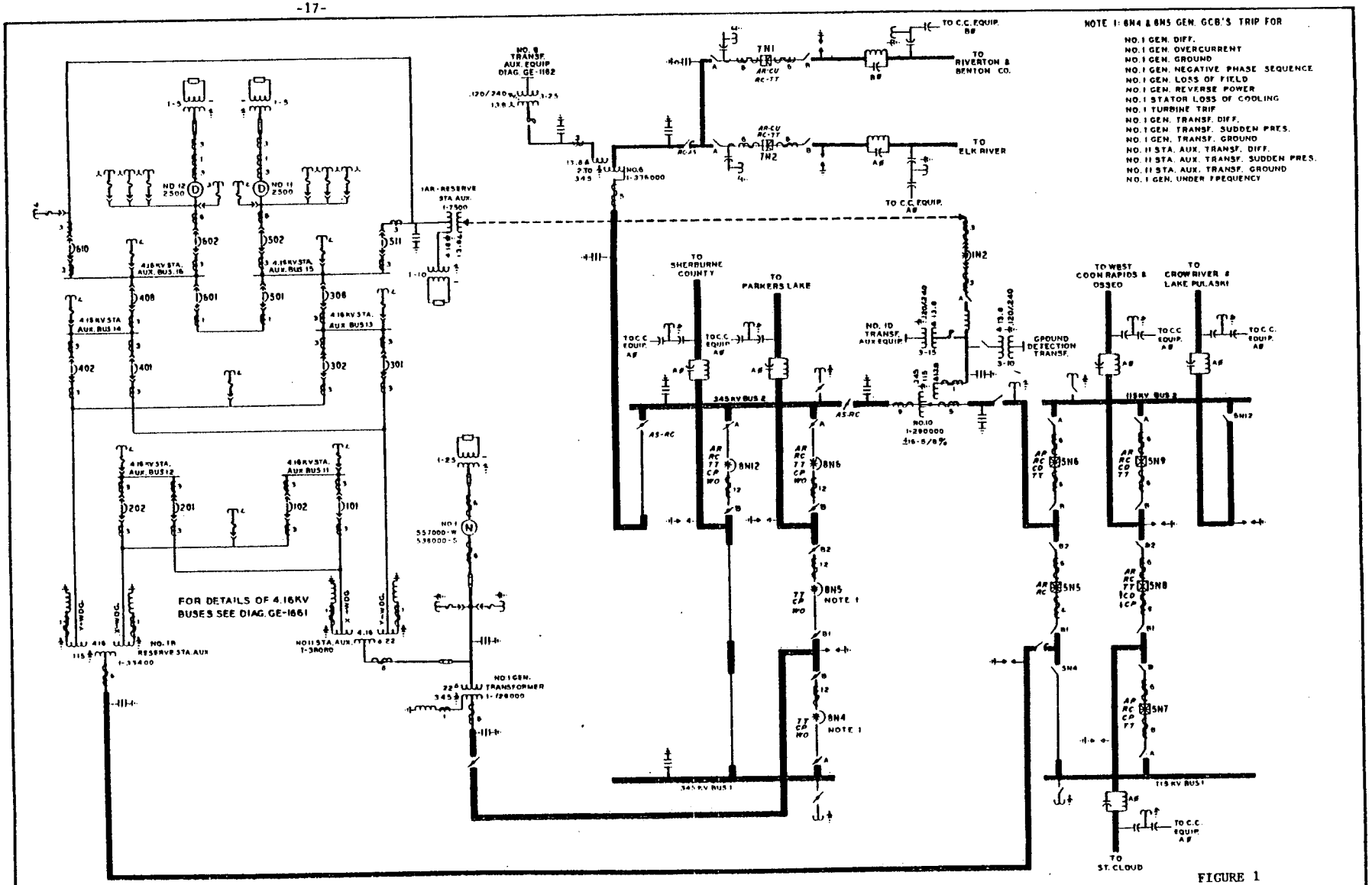

FIGURE 1

REVISIONS			
DATE	BY	CKD	APPR
2-6-78	B.M.		
2-17-78	J.A.		
4-5-78	J.A.		

NORTHERN STATES POWER CO.
SYSTEM OPERATION DEPT.
MONTICELLO GENERATING PLANT
ONE LINE DIAGRAM

DRAWN BY B. MARTIN DATE 4-2-70
CHECKED BY
APPROVED BY

GF-1660

OVERHEAD - LINES - UNDERGROUND

- 345 KV
- 161-230 KV
- 115 KV
- 69 KV
- 34.5 KV
- 18-23 KV
- 13.8 KV
- BELOW 13.8 KV
- FOREIGN OWNED BOUNDARIES

GENERATING UNITS

- G — GAS TURBINE
- N — NUCLEAR
- S — STEAM
- D — DIESEL
- H — HYDRO
- C — SYNCHRONOUS CONDENSER

77000-W WINTER NET CAPABILITY IN KW

76000-S SUMMER NET CAPABILITY IN KW

1000 NAME PLATE RATING IN KW

TRANSFORMERS (RATING IN KVA)

- TWO WINDING
- WITH C.T. IN NEUTRAL
- WITH TERTIARY
- WITH C.T. IN DELTA
- WITH LTC EQUIP.
- STARTING COMPENSATOR OR AUTOTRANSFORMER
- WITH TERTIARY
- AUTOTRANSFORMER WITH LTC EQUIP.
- ZIG ZAG GROUNDING
- TWO WINDING GROUNDING
- THREE WINDING
- POTENTIAL
- 3D CURRENT — "D" ADDED IF CURRENT IS DOUBLE WINDING
- BUSHING CURRENT
- BUSHING POTENTIAL DEVICE

CONNECTION SYMBOLS

- Δ DELTA
- ∠ OPEN DELTA
- — SINGLE PHASE
- ⅄ UNGROUNDED WYE
- GROUNDED WYE: THREE PHASE, TWO PHASE, SINGLE PHASE
- GROUNDED ZIG ZAG

REGULATORS (RATING IN KVA)

- INDUCTION TYPE SINGLE PHASE
- 2 ← NO. OF PHASES
- STEP TYPE

CIRCUIT BREAKERS

- OIL
- AIR, GAS & VACUUM
- REMOVABLE TRUCK IN SAFETY ENCLOSURE
- EQUIPMENT ISOLATOR

SWITCHING DEVICES

- DOUBLE BREAK DISCONNECT
- C243 DUAL LOCK
- HORN GAP DISCONNECT
- SINGLE THROW DISCONNECT
- DOUBLE THROW DISCONNECT
- SPLIT BLADE - DOUBLE THROW DISCONNECT
- AUTOMATIC THROWOVER DISCONNECT
- REVERSING SWITCH
- LOAD INTERRUPTER OR VACUUM SWITCH
- CIRCUIT SWITCHER
- REGULATOR BYPASS AND DISCONNECTING DEVICE
- MAGNETIC CONTACTOR
- REVERSING MAGNETIC CONTACTOR
- 2 SPEED MOTOR MAGNETIC CONTACTOR
- CONTROLLER

Q.B. - QUICK BREAK
N.O. - NORMALLY OPEN
N.C. - NORMALLY CLOSED

FUSES

- FUSE
- DISCONNECTING
- S AR — AUTOMATIC REFUSING AND NUMBER OF FUSES PER PHASE

MILEAGE & CONDUCTORS

MILEAGE → 10.5M. 0794 ← LINE NUMBER

6 CU

COND. SIZE: 6 - NO. 6; 2/0 - NO. 00; 350 - 350 000 CIR. MILS.

TYPE OF COND.:
- CU - COPPER
- AL - ALUMINUM
- A - ALUMINUM CONDUCTOR STEEL REINFORCED
- CW - COPPERWELD
- ACAR - ALUMINUM CONDUCTOR ALUMINUM ALLOY REINFORCED
- ALW - ALUMOWELD

MISCELLANEOUS

- REACTOR - KVARS
- EXPULSION DEVICE
- RESISTANCE
- GROUND CONNECTION
- LIGHTNING ARRESTER
- HOT LINE CLAMP
- POTHEAD
- LIGHTNING ROD GAPS
- LINK
- HEATER
- PLUG RECEPTACLE
- M — MOTOR GEN. UNIT
- METERING EQUIPMENT
- CAPACITOR - KVARS
- COUPLING CAPACITOR POTENTIAL DEVICE
- TO CARRIER CURRENT EQUIPMENT
- WAVE TRAP
- 10 — MOTOR; HORSEPOWER RATING OF MOTOR

METHODS OF INDICATING RELAY PROTECTION & CONTROL

SYMBOLS INDICATE TYPE OF OPERATION

- NO PROTECTION
- DIRECTIONAL LINE
- NON-DIRECTIONAL LINE OR OVERCURRENT
- DIRECTIONAL GROUND
- NON-DIRECTIONAL GROUND
- DIFFERENTIAL - INCLUDES SUDDEN PRESSURE
- * ELECTRICAL INTERLOCK DESCRIBED BY NOTE
- AR — RELAY OPERATIONS NOT COVERED BY SYMBOLS

AR - AUTOMATIC RECLOSING OR REFUSING
AS - AUTOMATIC SECTIONALIZING
CD - CARRIER - DIRECTIONAL COMPARISON
CP - CARRIER - PHASE COMPARISON
CU - CARRIER UNBLOCKING
MO - MOTOR OPERATED
OV - OVER VOLTAGE
PT - PRESSURE - TEMPERATURE
RC - REMOTE CONTROL
SC - SPRING CLOSING BY PROTECTIVE DEVICE
T - TEMPERATURE
TA - TEMPERATURE ALARM
TC - TIME CLOCK
TT - TRANSFERRED TRIPPING
UF - UNDER FREQUENCY
UV - UNDER VOLTAGE
WD - WIRE PILOT - DIRECTIONAL COMPARISON
WO - WIRE PILOT - PERMISSIVE OVERREACH
WP - WIRE PILOT - PHASE COMPARISON
WU - WIRE PILOT - PERMISSIVE UNDERREACH

AUTOMATIC TRANSFER

NORMAL
AT-N - NORMAL SOURCE

EMERGENCY
AT-L - AUTOMATIC RETURN ONLY ON LOSS OF EMERG. SOURCE
AT-NR - NO AUTOMATIC RETURN
AT-R - AUTOMATIC RETURN ONLY ON RESTORATION OF NORMAL SOURCE

REVISIONS			
DATE	BY	CKD.	APPR.
11-12-73	R. J.	[illegible]	[illegible]
3-18-74	R. J.	[illegible]	[illegible]
12-18-75	B.M.	[illegible]	[illegible]
8-3-77	L.O.	[illegible]	[illegible]

NORTHERN STATES POWER CO.

LEGEND FOR ONE LINE DIAGRAMS

(BASED ON A.S.A. STANDARDS)

SYSTEM OPERATION DEPT.

DRAWN BY R. MARTIN DATE MAY 10, 1961

CHECKED BY C. R. Erickson

APPROVED BY DePetrus

DIAGRAM NO. 1

FIGURE 2

FIGURE 3

Monticello Nuclear Generating Plant
Station Auxiliary Distribution System
Impedances on a Per Unit Basis.

Base Impedance is 0.1731 ohm on 4.16 KV level and 2.304×10^{-3} ohm on 480 V level.

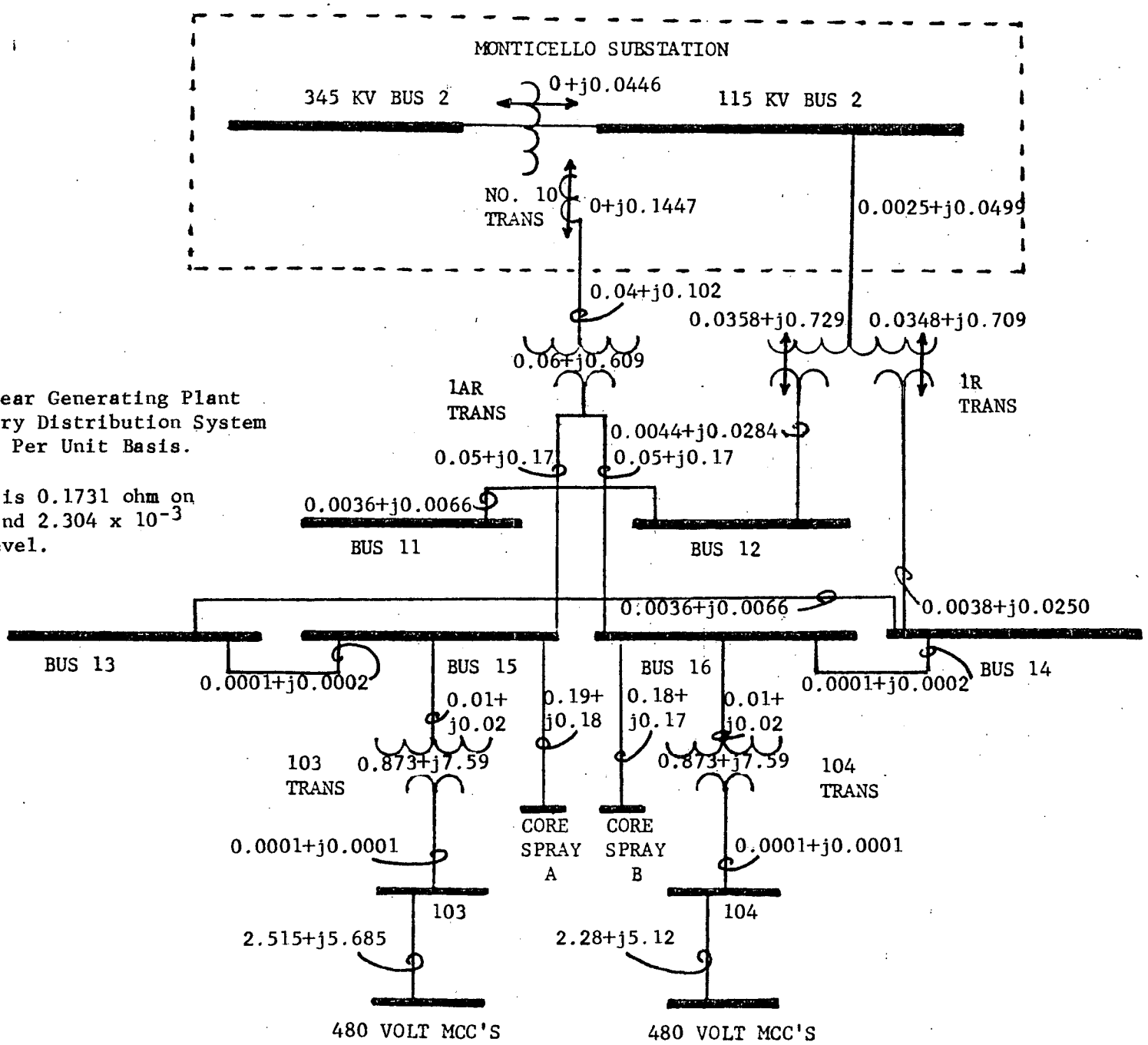

FIGURE 4

Case 1 Loads (MW/MVAR)

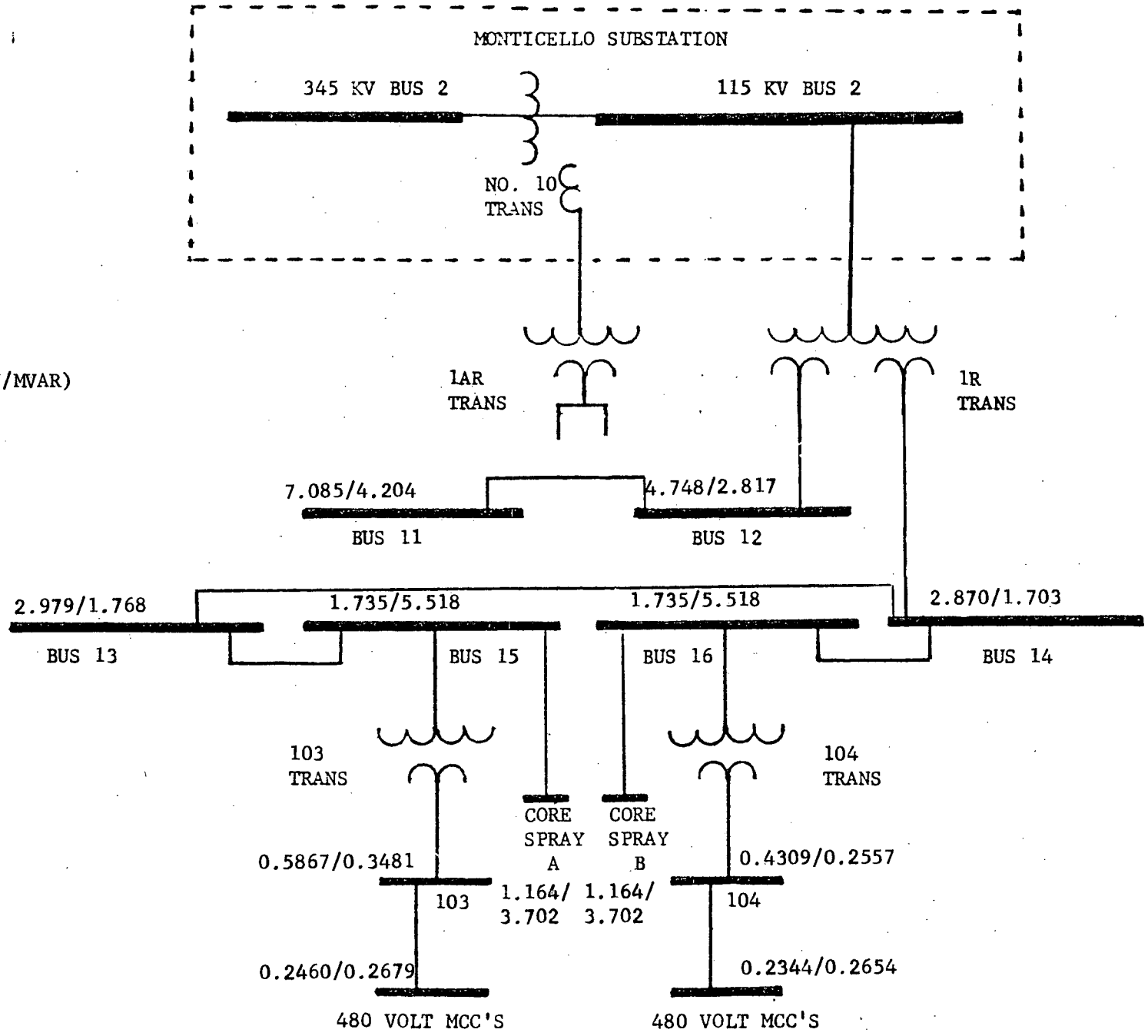

FIGURE 5

Case 2 Loads (MW/MVAR)

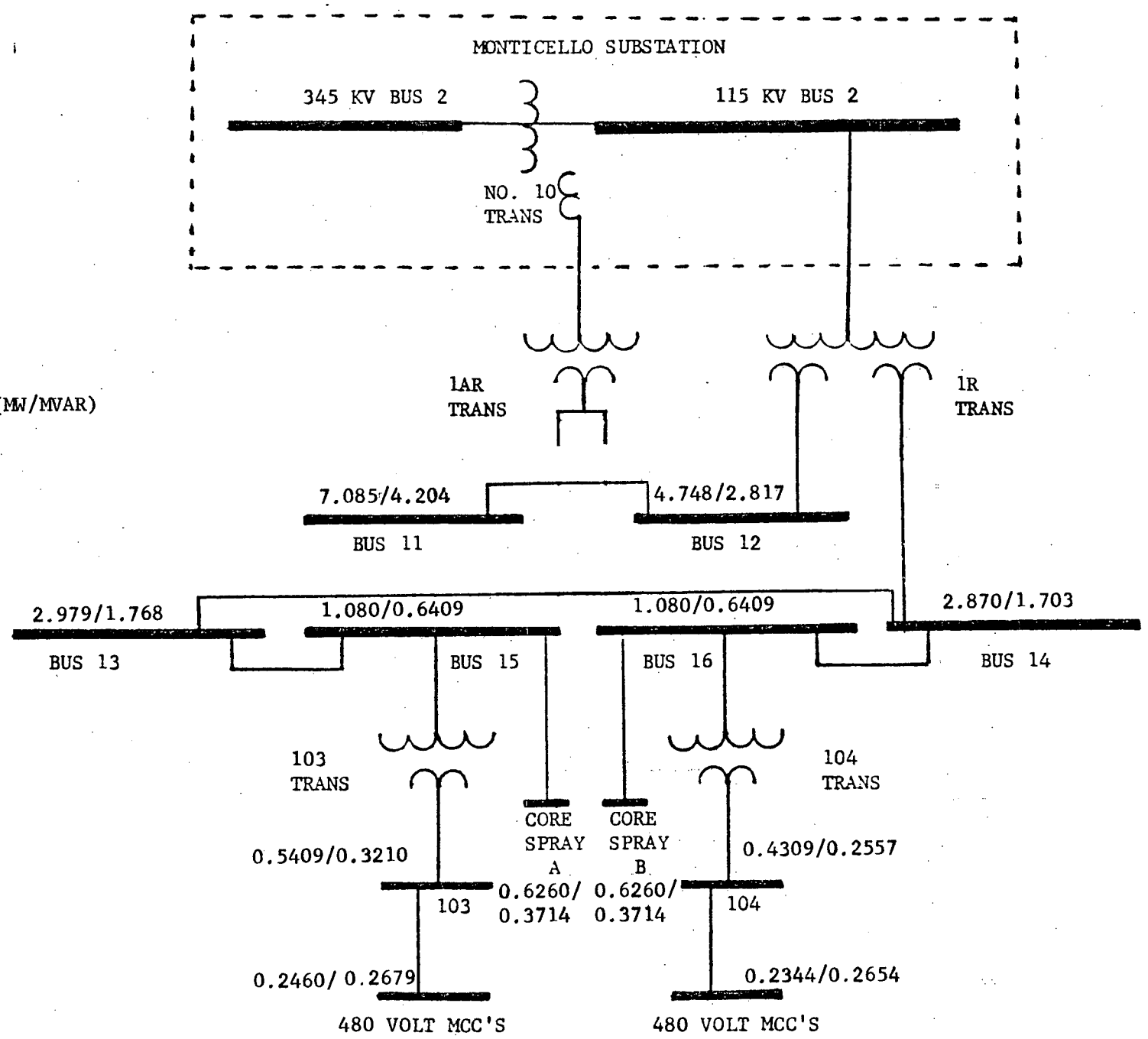

FIGURE 6

Case 3 Loads (MW/MVAR)

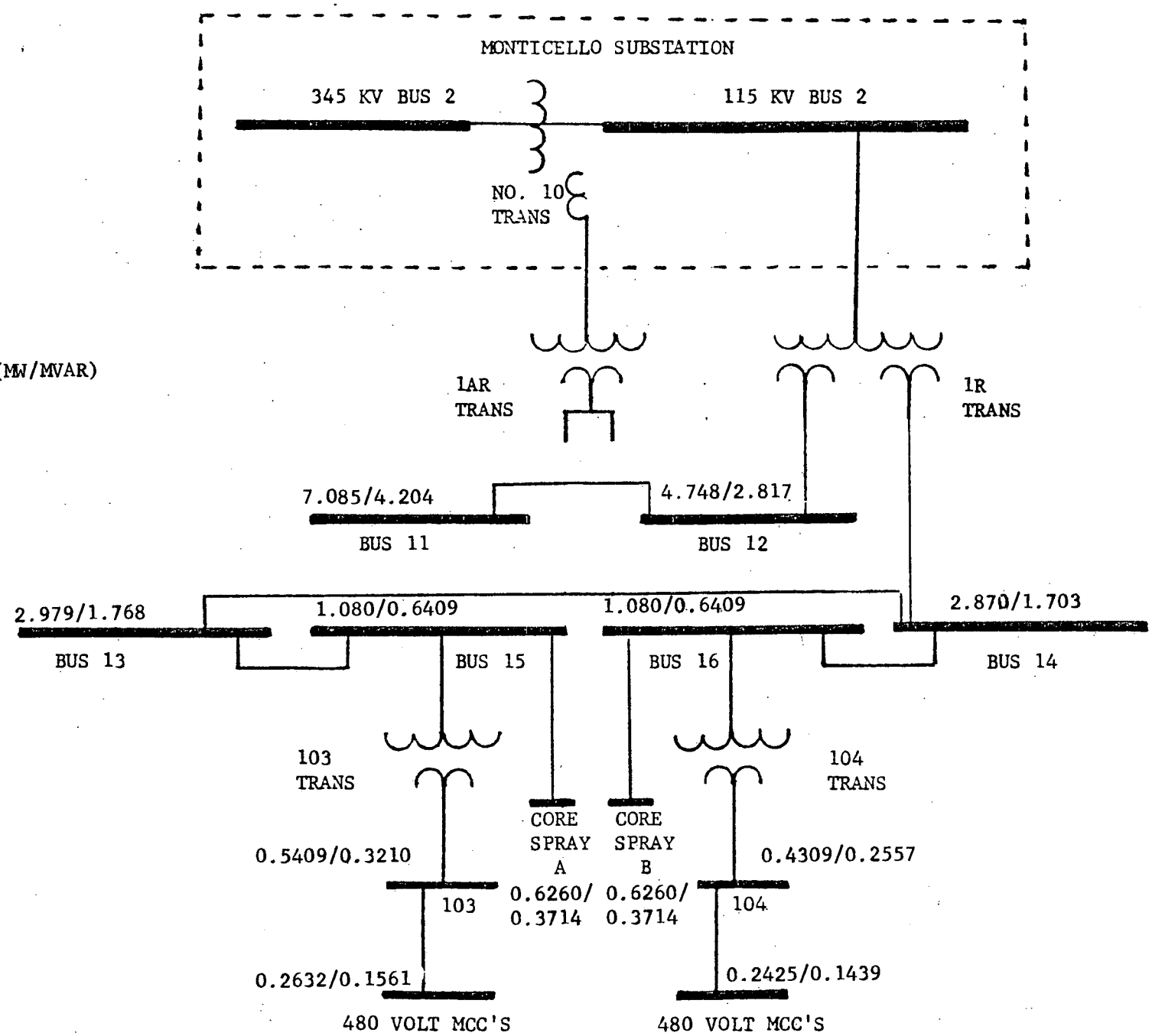

FIGURE 7

Case 4 Loads (MW/MVAR)

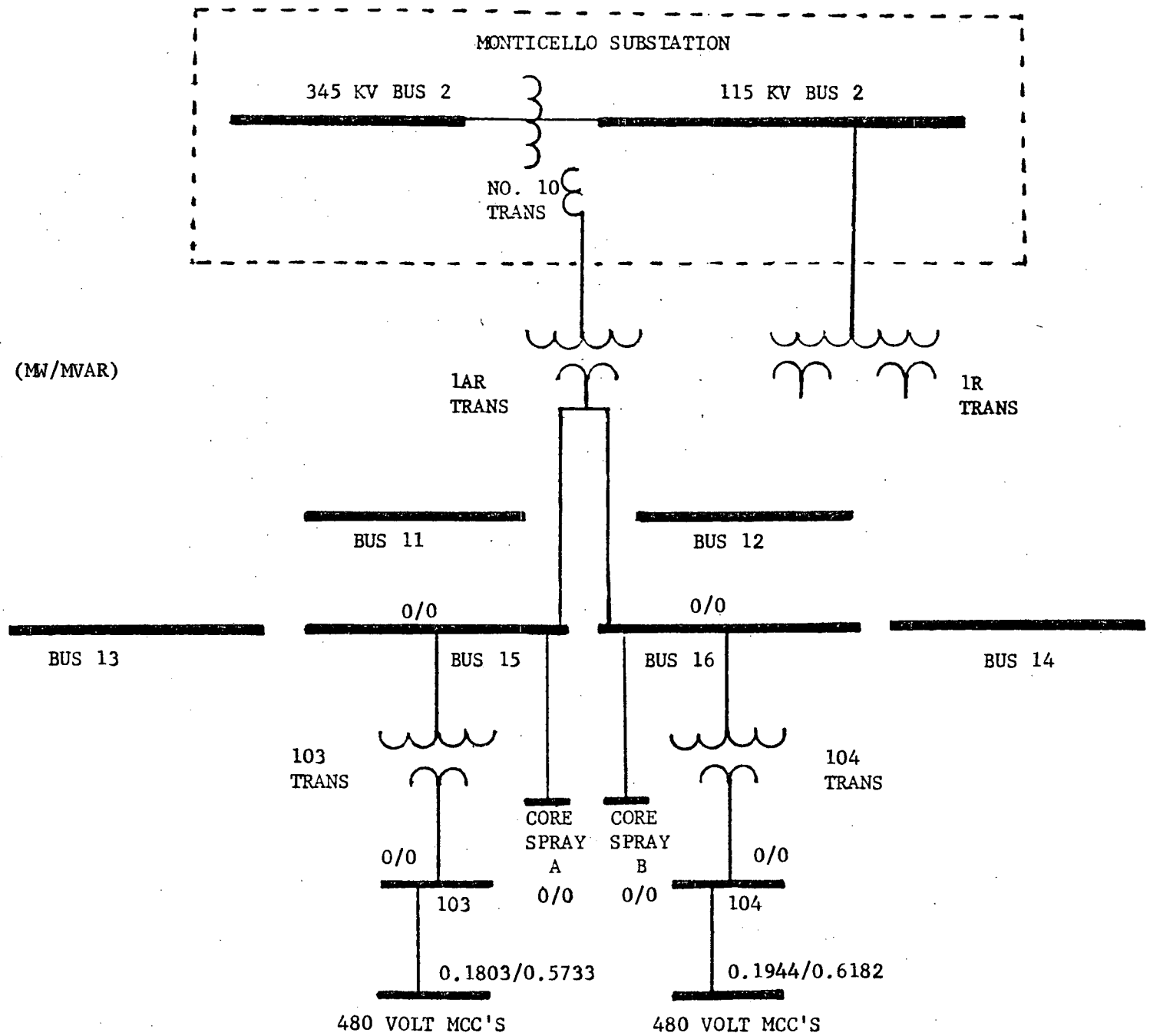

FIGURE 8

Case 5 Loads (MW/MVAR)

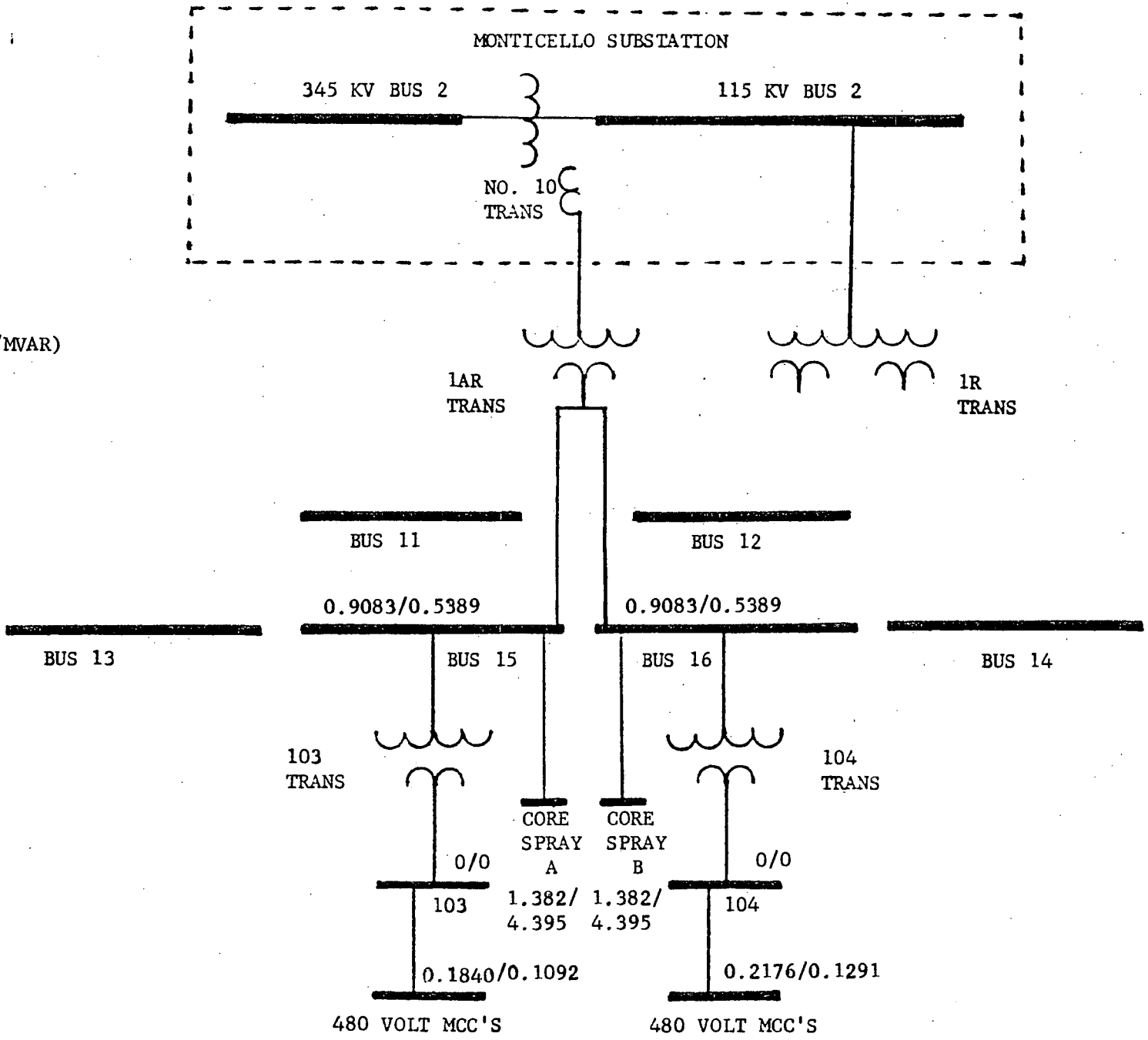

FIGURE 9
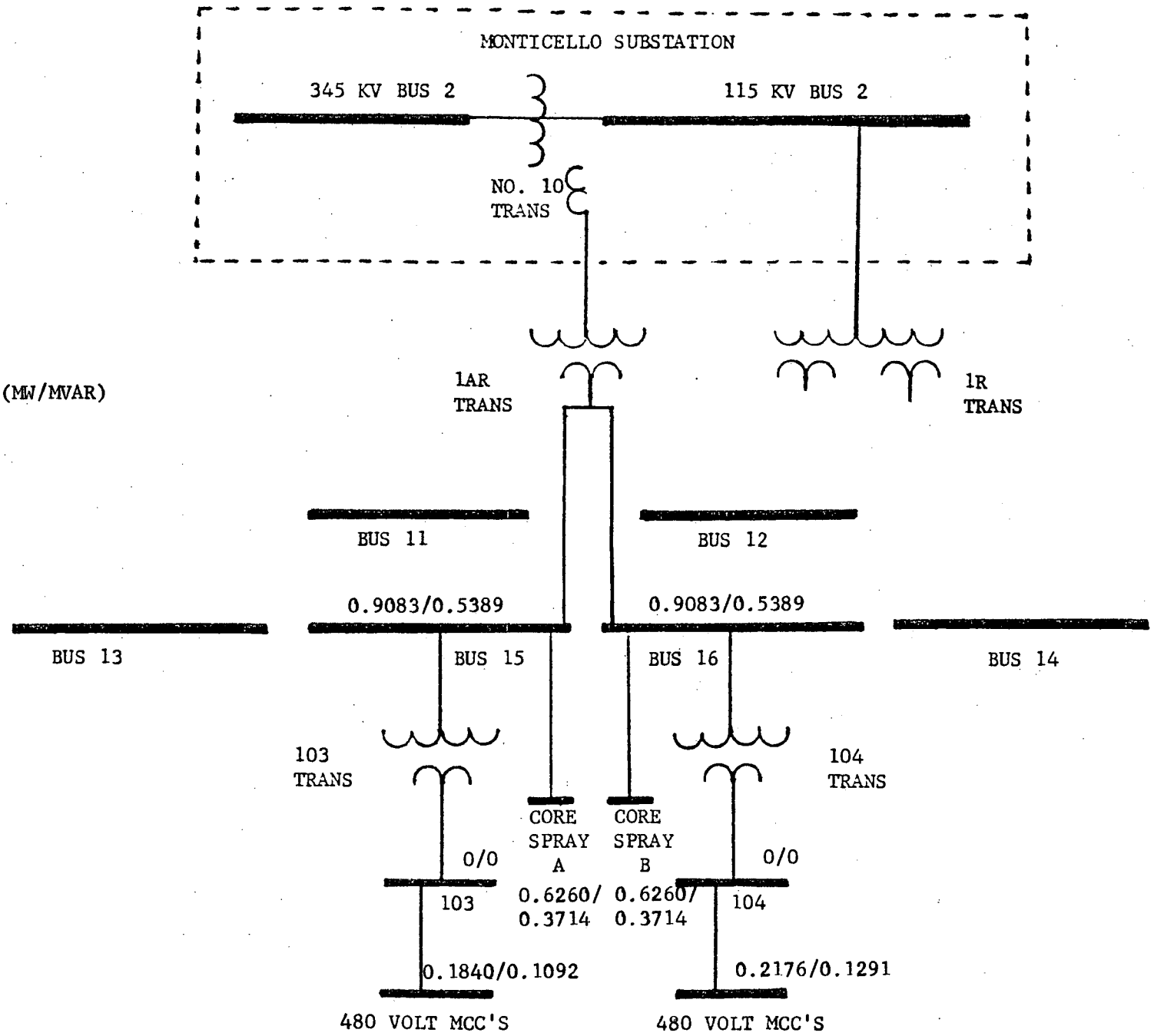
Case 6 Loads (MW/MVAR)