UNITED STATES OF AMERICA
NUCLEAR REGULATORY COMMISSION

BEFORE THE ATOMIC SAFETY AND LICENSING BOARD

In the Matter of	)	Docket Nos. 50-247-LR and
	)	50-286-LR
ENTERGY NUCLEAR OPERATIONS, INC.	)	
	)	
(Indian Point Nuclear Generating Units 2 and 3)	)	
	)	October 25, 2011

APPLICANT'S OPPOSITION TO NEW YORK STATE'S AND RIVERKEEPER'S JOINT MOTION TO ADMIT NEW CONTENTION NYS-38/RK-TC-5

William C. Dennis, Esq.
Entergy Nuclear Operations, Inc.
440 Hamilton Avenue
White Plains, NY 10601
Phone: (914) 272-3202
Fax: (914) 272-3205
E-mail: wdennis@entergy.com

Kathryn M. Sutton, Esq.
Paul M. Bessette, Esq.
MORGAN, LEWIS & BOCKIUS LLP
1111 Pennsylvania Avenue, N.W.
Washington, D.C. 20004
Phone: (202) 739-5738
E-mail: ksutton@morganlewis.com
E-mail: pbessette@morganlewis.com

Martin J. O'Neill, Esq.
MORGAN, LEWIS & BOCKIUS LLP
1000 Louisiana Street
Suite 4000
Houston, TX 77002
Phone: (713) 890-5710
E-mail: martin.oneill@morganlewis.com

COUNSEL FOR ENTERGY NUCLEAR OPERATIONS, INC.

TABLE OF CONTENTS

Page

UNITED STATES OF AMERICA
NUCLEAR REGULATORY COMMISSION

BEFORE THE ATOMIC SAFETY AND LICENSING BOARD

In the Matter of	)	Docket Nos. 50-247-LR and 50-286-LR
	)	
ENTERGY NUCLEAR OPERATIONS, INC.	)	
	)	
(Indian Point Nuclear Generating Units 2 and 3)	)	
	)	October 25, 2011

APPLICANT'S OPPOSITION TO NEW YORK STATE'S AND RIVERKEEPER'S JOINT MOTION TO ADMIT NEW CONTENTION NYS-38/RK-TC-5

I. INTRODUCTION

Pursuant to 10 C.F.R. § 2.309(h)(1) and the Atomic Safety and Licensing Board's Amended Scheduling Order,[1] Entergy Nuclear Operations, Inc. ("Entergy") submits this Answer opposing the Joint Motion filed by New York State ("NYS") and Riverkeeper, Inc. (collectively, "Intervenors") on September 30, 2011, to admit New Contention NYS-38/RK-TC-5 ("New Contention" or "NYS-38/RK-TC-5").[2] As a threshold matter, the New Contention is untimely under 10 C.F.R. § 2.309(f)(2) in that it challenges Entergy's reliance on a commitment made over four years ago as part of its original license renewal application ("LRA") for Indian Point Units 2 and 3 ("IP2" and "IP3," collectively "Indian Point Energy Center" or "IPEC").

The New Contention also fails to meet the contention admissibility criteria in 10 C.F.R.

---

[1] Licensing Board Amended Scheduling Order at 2-3 (June 7, 2011) (unpublished) ("Amended Scheduling Order").

[2] State of New York and Riverkeeper's Joint Motion for Leave to File a New Contention Concerning Entergy's Failure to Demonstrate That It Has All Programs That Are Required to Effectively Manage the Effects of Aging of Critical Components or Systems" (Sept. 30, 2011) ("Joint Motion"); State of New York and Riverkeeper's New Joint Contention NYS-38/RK-TC-5 ("New Contention"). Intervenors also filed two declarations in support of the New Contention. *See* Declaration of Dr. Richard T. Lahey, Jr. (Sept. 30, 2011) ("Lahey Declaration"); Declaration of Dr. Joram Hopenfeld (Sept. 30, 2011) ("Hopenfeld Declaration").

§ 2.309(f)(1)(iii) to (vi). The New Contention erroneously alleges that Entergy relies on commitments to define, in the future, the aging management programs ("AMPs") and activities required by Part 54. That is not so. Entergy already has defined the requisite AMPs and aging management activities, which the Staff has reviewed and found to be acceptable. Entergy's commitments to *implement* certain aspects of its AMPs in the future (as opposed to define their content in the first instance) are fully authorized by NRC regulations and Commission precedent.

Furthermore, Intervenors claim that there is no "record evidence" to support the NRC Staff's reasonable assurance determination under 10 C.F.R. §54.29(a). But, in doing so, Intervenors ignore the record evidence in Entergy's AMP submittals and other related documentation. Indeed, as documented in its Safety Evaluation Report ("SER") and Supplemental SER ("SSER"), the Staff has found that this record evidence provides reasonable assurance that Entergy will manage the targeted aging effects during the period of extended operation.[3]

The New Contention also falsely asserts that, by relying on certain AMPs and commitments to implement those AMPs, Entergy has sought to exclude material (yet undefined) safety issues from the scope of this adjudication and curtail public participation in this proceeding. To the contrary, Entergy has fully disclosed the details of its AMPs, as revised and augmented over the past four years. Moreover, Intervenors will have the opportunity to present testimony on many of the issues raised in the New Contention in the forthcoming hearings on two previously admitted contentions (Amended NYS-25 and NYS-26B/RK-TC-1B).

---

[3] *See* NUREG-1930, Safety Evaluation Report Related to the License Renewal of Indian Point Nuclear Generating Unit Nos. 2 and 3, Docket Nos. 50-247 and 50-286, Entergy Nuclear Operations, Inc. (Nov. 2009) ("SER"), *available at* ADAMS Accession No. ML093170451 (vol. 1), ML093170671 (vol. 2); NUREG-1930, Safety Evaluation Report, Supp. 1, Related to the License Renewal of Indian Point Nuclear Generating Unit Nos. 2 and 3, Docket Nos. 50-247 and 50-286, Entergy Nuclear Operations, Inc. (Aug. 30, 2011) ("SSER"), *available at* ADAMS Accession No. ML11242A215.

Finally, the New Contention relies on numerous factual mischaracterizations of Entergy's AMPs and related commitments. Those misstatements, which Entergy identifies and addresses below, do not and cannot provide support for the admission of the New Contention.

For these reasons, the Joint Motion and New Contention should be denied in their entirety.

II. PROCEDURAL BACKGROUND

On April 23, 2007, Entergy filed its application to renew the operating licenses for IP2 and IP3 for 20 years beyond their current expiration dates of September 28, 2013, and December 12, 2015, respectively. After a notice of opportunity for hearing was published in the *Federal Register* on August 1, 2007,[4] NYS and Riverkeeper separately filed petitions to intervene, proposing a number of contentions.[5] The Board admitted some of NYS's and Riverkeeper's contentions, including a joint technical contention related to Entergy's environmentally-assisted metal fatigue ("EAF") evaluations.[6]

The NRC Staff reviewed the LRA for compliance with the requirements of 10 C.F.R. Part 54, and documented its findings in an SER issued on August 11, 2009. On the basis of its review, the Staff determined that the LRA meets the standards for the renewal of an operating license set forth in 10 C.F.R. § 54.29(a).[7]

---

[4] Notice of Acceptance for Docketing of the Application and Notice of Opportunity for Hearing Regarding Renewal of Facility Operating License Nos. DPR–26 and DPR–64 for an Additional 20-Year Period, 72 Fed. Reg. 42,134 (Aug. 1, 2007).

[5] *See Entergy Nuclear Operations, Inc.* (Indian Point Nuclear Generating Units 2 & 3), LBP-08-13, 68 NRC 43, 57-58 (2008).

[6] *See id.* at 217-220.

[7] The Staff published the SER as NUREG-1930 in November 2009, following the Staff's receipt of comments from the Advisory Committee on Reactor Safeguards ("ACRS"), which concluded that the IPEC LRA meets the standards in 10 C.F.R. 54.29(a) and recommended that the Commission approve Entergy's application. *See* SER at 6-1.

By letter dated May 26, 2011, counsel for the NRC Staff notified the Board and other hearing participants that the Staff had issued additional requests for information ("RAIs") concerning the IPEC LRA and received Entergy's responses on March 28, 2011, planned to issue more RAIs, and intended to issue a Supplement to its SER by August 2011.[8] Staff counsel further noted that its SSER would address a number of issues that are the subject of admitted contentions.[9] As Staff counsel explained during a June 6, 2011 conference call with the Board, and as the SSER makes clear, the Staff issued the RAIs largely to account for recently-identified industry operating experience.[10] The Staff's actions in this regard, are consistent with its recent efforts—made partly in response to the Office of the Inspector General's ("OIG") audit of the NRC's license renewal program in 2007—to standardize the conduct and depth of license renewal operating experience reviews and to thoroughly analyze existing operating experience.[11]

On June 7, 2011, the Board issued an Amended Scheduling Order, which directed that any new or amended contentions arising from new information contained in the responses to RAIs referenced in the Staff's May 26, 2011 letter (*i.e.*, those submitted on March 28, 2011 or to be submitted by Entergy before publication of the Staff's SSER), or from new information

---

8 *See* Letter from S. Turk, Counsel for NRC Staff, to Atomic Safety and Licensing Board at 1 (May 26, 2011), *available at* ADAMS Accession No. ML11146A166.

9 *See id.*

10 *See* Pre-Hearing Conference Tr. at 963-64, June 6, 2011; SSER at 3-1 (attributing the Staff's issuance of certain additional RAIs to operating experience that has occurred coincident with and after the Staff's initial evaluation of the IPEC LRA and issuance of the SER).

11 *See* OIG-07-A-15, Audit of NRC's License Renewal Program (Sept. 6, 2007), *available at* ADAMS Accession No. ML072490486; Memorandum from W. Kane to S. Dingbaum, "Audit of NRC's License Renewal Program" (Oct. 30, 2007), *available at* ADAMS Accession No. ML072630299) (agreeing to implement seven of the eight OIG recommendations); Memorandum from R. Borchardt to S. Dingbaum, "Status of Recommendations: Audit of NRC's License Renewal Program (OIG-07-A-15)" (Nov. 6, 2009), *available at* ADAMS Accession No. ML093100058 (discussing actions taken by the Staff to close the OIG's recommendation that the Staff establish requirements and management controls to standardize the conduct and depth of license renewal operating experience reviews).

contained in the SSER, be filed no later than 30 days after issuance of the SSER.[12] On August 30, 2011, the NRC issued Supplement 1 to NUREG-1930 (*i.e.*, SSER).[13]

On September 30, 2011, NYS and Riverkeeper filed the instant Joint Motion and New Contention, the latter of which alleges:

> Entergy is not in compliance with the requirements of 10 C.F.R. § 54.21(a)(3) and (c)(1)(iii) and the requirements of 42 U.S.C. §§ 2133(b) and (d) and 2232(a) because Entergy does not demonstrate that it has a program that will manage the affects [sic] of aging of several critical components or systems and thus NRC does not have a record and a rational basis upon which it can determine whether to grant a renewed license to Entergy as required by the Administrative Procedure Act.[14]

Citing three Entergy commitments documented in the SSER (concerning reactor vessel internals inspections, EAF analyses, and steam generator divider plate inspections),[15] Intervenors allege that the relevant IPEC AMPs are incomplete and deficient, do not provide a sufficient basis for granting the renewed operating licenses, and undermine the role of the Board and the public in this proceeding by seeking "extra-hearing resolution of important safety questions."[16]

---

[12] *See* Amended Scheduling Order at 2;

[13] The SSER documents the Staff's review of supplemental information provided by Entergy in annual updates to the LRA required by 10 C.F.R. § 54.21(b), LRA amendments, responses to Staff RAIs filed after issuance of the SER, and updated information and commitments submitted in response to industry operating experience since November 2009. SSER at 1-1. It supplements portions of SER Sections 3, 4, 5, Appendix A, and Appendix B of the LRA. *Id.* Appendix A contains Entergy's complete, updated license renewal commitment list (46 items). Appendix B lists the key licensing correspondence reviewed by the Staff in its SSER. Staff counsel transmitted an electronic copy of the SSER to the Board and parties on August 31, 2011, thereby triggering the 30-day clock for the submittal of new or amended safety contentions. *See* Letter from S. Turk, Counsel for NRC Staff, to Atomic Safety and Licensing Board at 1 (Aug. 31, 2011), *available at* ADAMS Accession No. ML11243A109.

[14] New Contention at 1.

[15] These commitments include Entergy license renewal Commitments 30, 41, and 43. The full text of these commitments is contained in Appendix A to the SSER. *See* SSER, App. A at A-18, A-23, A-24.

[16] New Contention at 10.

III. LEGAL STANDARDS

A. Requirements for New and Amended Contentions

An intervenor may file new contentions only with leave of the presiding officer upon a showing that the new or amended contention is based on information that was not previously available and is materially different than information previously available.[17] The Commission recently reiterated that the publication of a new document, standing alone, does not meet this standard unless the information in that document is new and materially different from what was previously available.[18] Furthermore, an intervenor must act promptly to bring the new or amended contention.[19] A new contention is not an occasion to rehash old arguments or raise additional arguments that could have been raised previously.[20]

A proposed contention also must satisfy, without exception, each of the criteria set out in 10 C.F.R. § 2.309(f)(1)(i) through (vi).[21] Among other things, the petitioner must (i) demonstrate that the issue raised in the contention is within the scope of the proceeding, (ii) show that the issue is *material* to the findings the NRC must make to support the requested action, and (iii) provide sufficient information to show that a genuine dispute exists as to a

---

[17] 10 C.F.R. § 2.309(f)(2)(i)-(iii).

[18] *See*, *e.g.*, *N. States Power Co.* (Prairie Island Nuclear Generating Plant, Units 1 & 2), CLI-10-27, 72 NRC __, slip op. at 13-18 (Sept. 30, 2010).

[19] *See Entergy Nuclear Vt. Yankee, LLC* (Vt. Yankee Nuclear Power Station), LBP-06-14, 63 NRC 568, 573, 579-80 (2006) (rejecting petitioner's attempt to "stretch the timeliness clock" because its new contentions were based on information that was previously available and petitioners failed to identify precisely what information was "new" and "different").

[20] *Duke Energy Corp.* (McGuire Nuclear Station, Units 1 & 2; Catawba Nuclear Station, Units 1 & 2), CLI-02-28, 56 NRC 373, 385-86 (2002). This Board has emphasized that that it "will not entertain contentions based on environmental issues that could have been raised when the original contentions were filed." Licensing Board Memorandum and Order (Summarizing Pre-Hearing Conference) at 3 (Feb. 4, 2009) ("Pre-Hearing Conference Order") (unpublished).

[21] *S.C. Elec. & Gas Co.* (Virgil C. Summer Nuclear Station, Units 2 & 3), LBP-10-6, 71 NRC __, slip op. at 3 (Mar. 17, 2010).

material issue of law or fact.[22] A dispute is material if its resolution would make a difference in the outcome of the licensing proceeding.[23]

Additionally, the Commission has held that a petitioner may not use an adjudicatory proceeding to challenge generic rules or regulations, applicable statutory requirements, or the basic structure of the Commission's regulatory process.[24]

B. <u>10 C.F.R. Part 54 Requirements</u>

The NRC standards governing the issuance of a renewed operating license are set forth in 10 C.F.R. §§ 54.21 and 54.29(a). An applicant must demonstrate that, during the period of extended operation, it will manage the effects of aging on the functionality of structures and components that have been identified to require an aging management review ("AMR") under Section 54.21(a)(1).[25] In addition, an applicant must evaluate time-limited aging analyses ("TLAAs") in accordance with 10 C.F.R. § 54.21(c)(1).[26] Pursuant to § 54.29(a), NRC will issue a renewed license if it finds that actions have been identified and have been or will be taken by the applicant, such that there is *reasonable assurance* that the activities authorized by the

---

22 *See* 10 C.F.R. § 2.309(f)(1)(iii), (iv), (vi).

23 *Summer,* LBP-10-6, 71 NRC at 360 (*quoting Duke Energy Corp.* (Oconee Nuclear Station, Units 1, 2 & 3), CLI-99-11, 49 NRC 328, 333-34 (1999)).

24 10 C.F.R. § 2.335(a); *Oconee*, CLI-99-11, 49 NRC at 334; *Phila. Elec. Co.* (Peach Bottom Atomic Power Station, Units 2 & 3), ALAB-216, 8 AEC 13, 20, *aff'd with modification*, CLI-74-32, 8 AEC 217 (1974); *see also Carolina Power & Light Co.* (Shearon Harris Nuclear Power Plant), LBP-07-11, 66 NRC 41, 57-58 & n.53 (2007) (*citing Peach Bottom*, ALAB-216, 8 AEC at 20).

25 10 C.F.R. § 54.29(a)(1).

26 *Id.* § 54.29(a)(2). Section 54.3(a) defines TLAAs as those licensee calculations and analyses that: (1) involve structures, systems, and components ("SSCs") within the scope of license renewal, as delineated in § 54.4(a); (2) consider the effects of aging; (3) involve time-limited assumptions defined by the current operating term, for example, 40 years; (4) were determined to be relevant by the licensee in making a safety determination; (5) involve conclusions or provide the basis for conclusions related to the capability of the system, structure, and component to perform its intended functions, as delineated in § 54.4(b); and (6) are contained or incorporated by reference in the current licensing basis.

renewed license will continue to be conducted in accordance with the current licensing basis ("CLB").[27]

Settled case law makes clear that the reasonable assurance standard does not require an applicant to meet an "absolute" or "beyond a reasonable doubt" standard."[28] Rather, the Commission takes a case-by-case approach, applying sound technical judgment and verifying the applicant's compliance with Commission regulations.[29]

Part 54 specifically authorizes licensees to demonstrate compliance with its requirements via prospective actions that may be taken after the NRC issues the renewed license. This method of compliance is a well-established part of NRC regulatory practice.[30] Accordingly, it is permissible for an applicant to incorporate commitments in its LRA, and for the Staff to review and rely on such commitments in making its reasonable assurance determination under Section 54.29(a). Indeed, in issuing the license renewal rule in 1991, the Commission accepted the use of new commitments to monitor, manage, and correct age-related degradation unique to license renewal. It stated:

> The licensing basis for a nuclear power plant during the renewal term will consist of the current licensing basis and *new commitments* to monitor, manage, and correct age-related degradation unique to license renewal, as appropriate. The current licensing basis includes

---

[27] 10 C.F.R. § 54.29(a).

[28] *Commonwealth Edison Co.* (Zion Station, Units 1 & 2), ALAB-616, 12 NRC 419, 421 (1980); *Nader v. Ray*, 363 F. Supp. 946, 954 (D.D.C. 1973); *N. Anna Envtl. Coal. v. NRC*, 533 F.2d 655, 667-68 (D.C. Cir. 1976) (rejecting the argument that reasonable assurance requires proof beyond a reasonable doubt and noting that the licensing board equated "reasonable assurance" with "a clear preponderance of the evidence").

[29] *See AmerGen Energy Co., LLC* (License Renewal for Oyster Creek Nuclear Generating Station), CLI-09-7, 69 NRC 235, 263 (2009); *Entergy Nuclear Generation Co.* (Pilgrim Nuclear Power Station), CLI-10-14, 71 NRC __, slip op. at 21 (June 17, 2010).

[30] *See, e.g.*, 10 C.F.R. § 54.29 (stating "actions have been identified and have been *or will be taken*" with respect to managing the effects of aging and TLAAs) (emphasis supplied); *see also Fla. Power & Light Co.* (Turkey Point Nuclear Generating Plant, Units 3 & 4), CLI-01-17, 54 NRC at 8 ("Part 54 requires renewal applicants to demonstrate how their programs *will be effective in managing the effects of aging during the proposed period of extended operation*. . . . Applicants must identify any *additional actions*, *i.e.*, maintenance, replacement of parts, etc., *that will need to be taken* to manage adequately the detrimental effects of aging.") (internal citations omitted) (emphasis added).

> all applicable NRC requirements and licensee commitments, as defined in the rule.[31]

In its 1995 revised rule, the Commission reiterated that such commitments are acceptable.[32]

C. NRC License Renewal Guidance

The NRC Staff reviews license renewal applications in accordance with the requirements in 10 C.F.R. Part 54 and Staff guidance contained in NUREG-1800, "Standard Review Plan for Review of License Renewal Applications for Nuclear Power Plants" (Rev. 1, Sept. 2005) ("SRP-LR"). The primary guidance document for license renewal applicants is NUREG-1801, or the "GALL Report."[33] NUREG-1801 provides the technical basis for the SRP-LR and identifies AMPs that the Staff has determined to be acceptable for meeting the requirements of Part 54, based on its evaluations of programs at numerous operating plants during their initial 40-year license periods. It describes each AMP with respect to the ten SRP-LR program elements. According to the Commission, "an applicant's use of an [AMP] identified in the GALL Report constitutes reasonable assurance that it *will manage* the targeted aging effect during the renewal period."[34]

---

[31] Final Rule: Nuclear Power Plant License Renewal, 56 Fed. Reg. 64,943, 64,946 (Dec. 13, 1991) (emphasis added).

[32] Final Rule: Nuclear Power Plant License Renewal; Revisions, 60 Fed. Reg. 22,461, 22,473 (May 8, 1995) (stating that, for the license renewal review, consideration of *written commitments* only need encompass those commitments that concern the capability of SSCs, identified in § 54.21(a), integrated plant assessment and §54.21(c) time-limited aging analyses, to perform their intended functions, as delineated in § 54.4(b)).

[33] NUREG-1801, Generic Aging Lessons Learned Report (Rev. 1, Sept. 2005) ("GALL Report").

[34] *Entergy Nuclear Vt. Yankee, LLC* (Vt. Yankee Nuclear Power Station), CLI-10-17, 72 NRC __, slip op. at 44 (July 8, 2010) (*quoting AmerGen Energy Co., LLC* (Oyster Creek Nuclear Generating Station), CLI-08-23, 68 NRC 461, 468 (2008)) (emphasis added); *see also id.* ("We reiterate here that a commitment to implement an AMP that the NRC finds is consistent with the GALL Report constitutes one acceptable method for compliance with 10 C.F.R. § 54.21(c)(1)(iii).").

IV. THE NEW CONTENTION FAILS TO MEET THE NRC'S CONTENTION TIMELINESS AND ADMISSIBILITY CRITERIA IN 10 C.F.R. § 2.309(f)

A. The New Contention Does Not Satisfy the NRC's Timeliness Requirements in 10 C.F.R. § 2.309(f)(2) Insofar As It Relates to LRA Commitment 30

Entergy objects to the admission of the New Contention on timeliness grounds to the extent that it raises issues related to Commitment 30, which has been on the docket since May 11, 2007, when the Staff published its notice of receipt and availability of the LRA.[35] Commitment 30 states that Entergy will (1) participate in the industry programs for investigating and managing aging effects on reactor internals; (2) evaluate and implement the results of the industry programs as applicable to the reactor internals; and (3) upon completion of these programs, but not less than 24 months before entering the period of extended operation, submit an inspection plan for reactor internals to the NRC for review and approval.[36]

Since July 2010, the Intervenors have been aware of Entergy's intention to rely on the Electric Power and Research Institute's ("EPRI") MRP-227, "Pressurized Water Reactor Internals Inspection and Evaluation Guidelines" (Rev. 0, Dec. 22, 2008) ("MRP-227") to satisfy Commitment 30, and of the Staff's review of that document for approval as a topical report.[37] Indeed, they challenged specific aspects of MRP-227 in their supplemental bases to NYS-25,[38] but did not challenge Entergy's commitment to submit an *inspection plan* for reactor internals based on industry recommendations (*i.e.*, MRP-227) to the NRC for review and approval not less

---

[35] *See* Entergy Nuclear Operations, Inc.; Notice of Receipt and Availability of Application for Renewal of Indian Point Nuclear Generating Unit Nos. 2 and 3; Facility Operating License Nos. DPR-26 and DPR-64 for an Additional 20-Year Period, 72 Fed. Reg. 26,850 (May 11, 2007).

[36] *See* SSER App. A at A-18.

[37] Letter from P. Bessette, Counsel for Entergy, to Administrative Judges, "Notification of Entergy's Submittal of the Reactor Vessels Internals Program for Indian Point Units 2 and 3" (July 15, 2010), *available at* ADAMS Accession No. ML102030120. MRP-227 is available http://my.epri.com/portal/server.pt.

[38] *See* State of New York's Motion for Leave to File Additional Bases for Previously-Admitted Contention NYS-25 in Response to Entergy's July 14, 2010 Proposed Aging Management Program for Reactor Pressure Vessels and Internal Components (Sept. 15, 2010); Licensing Board Memorandum and Order (Ruling on Pending Motions for Leave to File New and Amended Contentions) at 19-28 (July 6, 2011) (unpublished) ("July 6, 2011 ASLB Ruling").

than 24 months before entering the period of extended operation, as they now do in the New Contention.[39] Because the New Contention is not based on information that was previously unavailable or materially different than information previously available to Intervenors, it should be rejected as untimely under 10 C.F.R. § 2.309(f)(2)(i) to (ii).[40]

B. The New Contention, In Any Event, Does Not Satisfy the NRC's Contention Admissibility Requirements in 10 C.F.R. § 2.309(f)(1)

Even if it were timely, the New Contention still should be rejected because it fails to meet the admissibility requirements of 10 C.F.R. § 2.309(f)(iii) to (vi). In short, the New Contention's claims do not square with the facts of record, which include sufficient details on Entergy's AMPs and future aging management activities, and are the bases for the Staff's conclusion that Entergy's LRA provides reasonable assurance that Entergy will adequately manage the effects of aging during the period of extended operation.

1. The New Contention Falsely Alleges That Entergy Is Relying on Commitments to Define in the Future the Aging Management Programs Required by Part 54

Intervenors accuse Entergy and the NRC Staff of relying on "commitment[s] to develop, in the future, plans and programs for an AMP that will be consistent with GALL or will meet

---

[39] *See* New Contention at 3 (alleging that "Entergy provides an inspection plan for reactor vessel internals that appears to rely on MRP-227 without identifying the revisions to it that NRC Staff has requested").

[40] As noted above, the New Contention also raises issues related to Commitments 41 and 43, which, while subsequently revised by Entergy, were originally submitted in a letter to the NRC dated March 28, 2011. *See* Letter from F. Dacimo, Entergy, to NRC Document Control Desk, "Response to Request for Additional Information on Aging Management Programs, Indian Point Nuclear Generating Unit Nos. 2 & 3," *available at* ADAMS Accession No. ML110960360 ("March 28, 2011 RAI Response") [Attach. 2 to this Answer]. Under established NRC practice and the Board's July 1, 2010 Scheduling Order, Intervenors should have raised any challenges related to those commitments within 30 days of the availability of the letter. *See* Licensing Board Scheduling Order at 6 (July 1, 2010) (unpublished). Entergy recognizes that the Board's June 7, 2011 Amended Scheduling Order (at 2) states that new or amended contentions arising from new information contained in the SSER will viewed as timely pursuant to 10 C.F.R. § 2.309(f)(2)(iii) if filed within 30 days of SSER issuance. However, Entergy does not waive the argument that the entire New Contention is untimely under Section 2.309(f)(iii).

regulatory requirements."[41] They also contend that commitments by applicants are unreliable in view of a recent OIG report.[42] But Intervenors' arguments fail as a matter of fact and of law.

As a factual matter, Entergy is not relying on commitments to define in the future what aging management programs and activities are necessary under Part 54. Those aging management programs and activities *already* have been defined by Entergy, thoroughly reviewed by the NRC Staff, and found to be consistent with the GALL Report. As relevant here, the AMPs include the Fatigue Monitoring Program, the Reactor Vessels Internals Program, and the Water Chemistry Control – Primary and Secondary Program. To the extent that Entergy is relying on commitments challenged by Intervenors, those commitments will *implement* the AMPs and aging management activities, the scope of which already has been defined.

Additionally, Intervenors' claim that an audit report by the NRC's OIG indicates that applicant commitments are unacceptable or "unwarranted" is simply wrong.[43] First, the OIG Audit Report contains no statements that support this claim. The Report merely recommends that the Staff should strive for greater consistency in implementing commitment management audits, achieve better institutional understanding of the definition and use of commitments, and improve its tracking of commitments.[44] The Report did not conclude, as Intervenors suggest, that licensee or applicant commitments are unreliable.[45] Indeed, in the conclusion of its report, the OIG stated that NRC licensee commitments are a valuable regulatory tool that add flexibility to the regulatory review framework, play a key role in facilitating the agency's safety

---

41 New Contention at 14.

42 *See id.* at 14-15.

43 New Contention at 14-15 (*citing* OIG-A-17, Audit of NRC's Management of Licensee Commitments (Sept. 19, 2011) ("OIG Audit Report"), *available at* ADAMS Accession No. ML112620529 [Attach. 2 to this Answer]).

44 OIG Audit Report at iii, 5, 22-23.

45 *See* New Contention at 14-15.

decisionmaking process, and provide additional assurance to the agency that a licensee action will not adversely affect the safe operation of the plant.[46]

This conclusion comes as no surprise given the Commission's own views on the importance and acceptability of licensee commitments, including those made by license renewal applicants. The Commission has "long declined to assume that licensees will refuse to meet their obligations," given that licensees remain subject to continuing NRC oversight, inspection, and enforcement authority throughout the renewed operating term.[47] As another Board put it, assuming otherwise "would . . . transmogrify license proceedings into open-ended enforcement actions: that is, licensing boards would be required to keep license proceedings open for the entire life of the license so intervenors would have a continuing, unrestricted opportunity to raise charges of noncompliance."[48]

The Commission also has made clear, as a legal matter, that licensee commitments are a well-established and essential mechanism for ensuring that licensees *implement* their AMPs in a timely and effective manner.[49] An applicant's compliance with its commitments is monitored by the Staff's ongoing regulatory oversight and is a matter outside the scope of this license renewal proceeding.[50] In fact, the Staff conducts inspections at plants to verify that license renewal

---

46 OIG Audit Report at 22.

47 *Pac. Gas & Elec. Co.* (Diablo Canyon Nuclear Power Plant, Units 1 & 2), CLI-03-2, 57 NRC 19, 29 (2003).

48 *Hydro Res., Inc.* (P.O. Box 777, Crownpoint, NM 87313), CLI-06-1, 63 NRC 1, 5 (2006) (citation omitted).

49 *See AmerGen Energy Co., LLC* (Oyster Creek Nuclear Generating Station), LBP-06-7, 63 NRC 188, 207 (2006) (accepting a licensee commitment as satisfying regulatory obligation); *Oyster Creek*, CLI-09-7, 69 NRC at 248-49 (holding that that review of the applicant's compliance with a commitment to perform a finite element structural analysis of the drywell was not a precondition for granting the renewed operating license); *Vt. Yankee*, CLI-10-17, 72 NRC __, slip op. at 45 (July 8, 2010) ("An applicant may commit to implement an AMP that is consistent with the GALL Report and that *will* adequately manage aging.").

50 *See Oyster Creek*, CLI-09-7, 69 NRC at 284.

commitments and aging management programs implemented in accordance with 10 C.F.R. Part 54.[51] IPEC is no exception to this inspection process.

2. Intervenors' Claim That There Is No "Record Evidence" to Support the Staff's Reasonable Assurance Finding Is Patently Incorrect And Ignores the Bases Upon Which the Staff Reaffirmed Its Earlier Reasonable Assurance Finding

Intervenors claim that there is no "record evidence" to support the Staff's reasonable assurance determination under 10 C.F.R. § 54.29(a). That assertion is patently incorrect. Entergy has fully described the AMPs cited in NYS-38/RK-TC-5, including the Fatigue Monitoring Program and Reactor Vessel Internals Program, in its LRA and subsequent revisions thereto. Based upon its review of that information, the Staff found those AMPs to be consistent with the corresponding GALL programs.[52] The SSER updates and supplements—but does not change—the Staff's prior conclusions based on additional information provided by Entergy since issuance of the SER approximately two years ago.[53]

As the SSER makes clear, the commitments cited by Intervenors do not, as the New Contention alleges, defer "definitive" safety findings by the Staff for post-hearing resolution. Entergy's new commitments reinforce the Staff's previous conclusions in its SER and, for that matter, address issues previously raised by Intervenors in admitted contentions. Intervenors ignore these crucial facts and the relevant discussion in the SSER explaining why Entergy's current AMPs and associated commitments are adequate.

---

[51] *See* NRC Inspection Manual, Temporary Instruction 2516/001, Review of License Renewal Activities (Mar. 30, 2011), *available at* ADAMS Accession No. ML110620255 (governing NRC Staff inspections on the "implementation of license renewal commitments, license conditions and selected aging management programs") [Attach. 3 to this Answer]; NRC Inspection Manual, Inspection Procedure 71003, Post-Approval Site Inspection for License Renewal at 1 (Oct. 31, 2008), *available at* NRC ADAMS Accession No. ML082830294 [Attach. 4 to this Answer].

[52] In this regard, Intervenors' statement that "Entergy has not filed any documents from which it can demonstrate that its AMP in those areas are consistent with GALL" is groundless. New Contention at 3. Contrary to Intervenors' unsubstantiated assertions, the necessary factual record is not "missing." *Id.* at 10, 14.

[53] *See* SSER at 6-1 ("The staff concludes that the additional information provided by Entergy Nuclear Operations, Inc., does not alter the conclusions stated in the SER and that the requirements of 10 CFR 54.29(a) have been met.").

First, with regard to metal fatigue, the SSER explains that LRA Commitment 43 is acceptable because it is consistent with the recommendations in SRP-LR Sections 4.3.2.2 and 4.3.3.2, and GALL AMP X.M1, to consider environmental effects for the NUREG/CR-6260 locations, at a minimum.[54] Nowhere do Intervenors take issue with this finding or its bases. The SSER further explains that new Commitment 44, which requires IPEC to include a written explanation and justification of any user intervention in future evaluations using the WESTEMS™ Design CUF module, allows Entergy sufficient time to document and implement necessary procedures, ensures that records of such evaluations will contain sufficient information to document and justify any assumptions and engineering judgment, and ensures that the bases for the conclusions in the fatigue calculations are auditable and retrievable.[55]

Second, the SSER explains that Commitment 41 is acceptable because Entergy has made a commitment to inspect the divider plate assembly in each steam generator at both IPEC units during the period of extended operation to confirm the absence of PWSCC indications.[56] Earlier this year, the ACRS agreed with the Staff that an identical commitment by the applicant in the Kewaunee Power Station license renewal proceeding was acceptable.[57] Contrary to Intervenors' assertion, the Staff did *not* conclude in its SSER that Entergy's Water Chemistry Control Program "is not sufficiently effective to meet AMP requirements."[58]

Finally, Intervenors again ignore the relevant discussion in erroneously asserting that Entergy's current AMP for reactor vessel internals is a temporary proxy for some future AMP,

---

[54] *See* SSER at 4-2.

[55] *See id.*

[56] *See id.* at 3-19.

[57] See Letter Report from Said Abdel-Khalik, ACRS Chairman, to Chairman Jaczko, NRC, "Report on the Safety Aspects of the License Renewal Application for the Kewaunee Power Station," at 2 (Jan. 7, 2011), *available at* ADAMS Accession No. ML103410361 [Attach. 5 to this Answer].

[58] New Contention at 2.

the details of which are not disclosed.[59] The SSER clearly explains that Entergy's (1) submission of the IPEC Reactor Vessel Internals Program on June 14, 2010, (2) its stated intention of supplying an inspection plan by September 28, 2011, and (3) its plan to revise its program, as necessary, in response to the issuance of MRP-227-A, are consistent with Commitment 30 and recent NRC guidance provided in Regulatory Information Summary ("RIS") 2011-07.[60] As discussed below, Entergy already has submitted a detailed plant-specific inspection plan that addresses the Staff's Safety Evaluation of MRP-227. Because MRP-227-A will be revised to address the Staff's conditions set forth in the Staff's Safety Evaluation of MRP-227, further substantive changes to the inspection plan and AMP are not expected.

In summary, the supplemental information provided by Entergy since issuance of the SER in 2009 and evaluated by the Staff in the SSER amply supports the Staff's reasonable assurance finding. Moreover, Intervenors ignore the Staff's bases for appropriately accepting Entergy's revised AMPs and related commitments that provide additional support for the reasonable assurance finding. Consequently, the New Contention has no factual foundation and fails to raise a genuine material dispute, as required by 10 C.F.R. § 2.309(f)(v) to (vi).

3. Intervenors' Claim That the Relevant AMPs Are Not Subject to Full Adjudicatory Review Is Erroneous

In NYS-38/RK-TC-5, Intervenors allege that Entergy and the Staff have eliminated the role of the public and this Board in reviewing the relevant AMPs.[61] That is not so. Contrary to Intervenors' argument, Entergy and the Staff are not seeking to defer the resolution of material

---

[59] *See id.* at 3.

[60] *See* Regulatory Information Summary [RIS] 2011-07, License Renewal Submittal Information for Pressurized Water Reactor Internals Aging Management (July 21, 2011), *available at* ADAMS Accession No. ML111990086 [Attach. 6 to this Answer]. The SSER further states that "the staff's conclusions regarding the applicant's AMRs for reactor vessel internals, as documented in SER Sections 3.1.2.2.6, 3.1.2.2.9, 3.1.2.2.12, 3.1.2.2.15, and 3.2.2.17, remain valid." SSER at 3-20.

[61] New Contention at 10.

safety issues until after the conclusion of this proceeding.[62] Under 10 C.F.R. § 54.29, the pertinent question is whether actions have been identified and have been or will be taken with respect to managing age-related degradation, which by its nature becomes important principally during the period of extended operation.[63] Contested hearings thus focus on the adequacy of an applicant's proposed AMPs vis-à-vis Part 54 and the corresponding GALL AMPs—not on an applicant's *implementation* of those AMPs or related commitments. The NRC Staff (not the Board or Intervenors) reviews such implementation activities as part of its ongoing regulatory oversight—"separate and apart" from its review of the LRA.[64] Intervenors fail to acknowledge this settled legal principle in arguing that Entergy's commitments forestall "definitive" safety findings by the Staff or the Board.[65]

Similarly mistaken is Intervenors' argument that Entergy "assumes" that the GALL Report is "merely a list of goals" that an applicant can promise to meet at some undisclosed future time.[66] As incorporated by reference in the LRA, and as modified by an applicant's AMP submittals, the GALL Report defines the scope of the AMP, the parameters to be monitored, the inspection methods to be used, and the applicable acceptance criteria. When applicants state that their plant-specific AMPs are consistent with the corresponding GALL programs, the Staff's

---

62 *Id.* at 13.

63 *See Turkey Point*, CLI-01-17, 54 NRC at 7 (*quoting* Final Rule: Nuclear Power Plant License Renewal, 56 Fed. Reg. at 64,946).

64 *Oyster Creek*, CLI-09-7, 69 NRC at 284 (2009) (stating that "review and enforcement of license conditions is a normal part of the Staff's oversight function rather than an adjudicatory matter"). If Intervenors wish to modify the Part 54 regulatory process, then the proper procedural avenue is a petition for rulemaking under 10 C.F.R. § 2.802. If they believe that Entergy is not complying with obligations that are subject to ongoing NRC oversight, then they may petition the NRC to take enforcement action under 10 C.F.R. § 2.206. Insofar as their New Contention challenges the adequacy of the Part 54 relicensing process, it improperly raises an issue outside the scope of this proceeding. 10 C.F.R. §§ 2.309(f)(1)(iii), 2.335.

65 While Intervenors cite numerous NRC and judicial cases on pages 12 to 14 of the New Contention, most of the decisions are several decades old and have no meaningful connection to license renewal. Additionally, the general legal principles for which those cases stand have not been violated here. There has been no exclusion of material safety issues from the scope of this proceeding or deferral of their resolution to the post-hearing phase. Nor is the factual record lacking in details on Entergy's aging management programs.

66 New Contention at 3.

review shifts from reviewing each program in detail to verifying the applicant's assertions.[67] This method of demonstrating compliance with the aging management requirements of Part 54 is well settled.[68]

In this case, the Staff has verified the consistency of Entergy's AMPs during its LRA review, which has included extensive RAIs and on-site audits.[69] And, as discussed above, the SSER, in particular, explains *why* Entergy's recent AMP revisions and commitments provide reasonable assurance that age-related degradation of the subject structures and components will be adequately managed throughout the period of extended operation.

Furthermore, as a factual matter, this Board already has admitted and subsequently amended two technical contentions (NYS-25 and NYS-26B/RK-TC-1B) that challenge, *inter alia*, the adequacy of the IPEC Reactor Vessel Internals Program and Fatigue Monitoring Program, respectively.[70] As admitted, those contentions encompass the issues raised by Intervenors in NYS-38/RK-TC-5 with respect to the two aforementioned AMPs.[71] The parties and the Board will have ample opportunity to vet the adequacy of Entergy's AMP, including its reliance on MRP-227, during the public evidentiary hearing on NYS-25, as amended.

---

67 *See* SECY-01-0074, "Approval to Publish Generic License Renewal Guidance Documents" at 1-2 (July 2, 2001), *available at* ADAMS Accession No. ML011130506 (package).

68 *See Vt. Yankee*, CLI-10-17, slip op. at 45-46 (stating that "the Staff will draw its own independent conclusion as to whether the applicant's programs are in fact consistent with the GALL Report").

69 *See e.g.*, SER Vol. 2, at 3-4 to 3-10; Audit Report For Plant Aging Management Programs and Reviews for Indian Point, Units 2 and 3 (Jan. 13, 2009), *available at* ADAMS Accession No. ML083540662. An audit and review is conducted at the applicant's facility to evaluate AMPs that the applicant claims to be consistent with the GALL Report. Reviews also are performed to address those AMRs or AMPs related to emergent issues, stated to be not consistent with the GALL Report, or based on an NRC-approved precedent (*e.g.*, AMRs and AMPs addressed in an NRC SER of a previous LRA).

70 *See Indian Point,* LBP-08-13, 68 NRC at 129-140, 166-172; Licensing Board Memorandum and Order (Ruling on Motion for Summary Disposition of NYS-26/26A/Riverkeeper TC-1/1A (Metal Fatigue of Reactor Components) and Motion for Leave to File New Contention NYS-26B/Riverkeeper TC-1B) at 12-28 (Nov. 4, 2010) ("Nov. 4, 2010 ASLB Ruling"); July 6, 2011 ASLB Ruling at 19-28.

71 Intervenors concede as much in stating that they intend to use the bases and supporting evidence in their New Contention as they relate to metal fatigue and reactor vessel internals as providing additional support for NYS-25 and NYS-26B/RK-TC-1B. *See* New Contention at 16.

NYS-26B/RK-TC-1B alleges, among other things, that the revised EAF analyses completed by Entergy in July 2010 fail to comply with NUREG-1801 guidance regarding expansion of the scope of components to be evaluated and rely on a flawed or inadequately explained methodology.[72] In admitting this contention, the Board made clear that the breadth of Entergy's revised CUF calculations and methods used to perform them are subject to scrutiny.[73] NYS-26B/RK-TC-1B further alleges that Entergy's Fatigue Monitoring Program lacks the level of detail contemplated by NUREG-1801.[74] Here again, the issues cited by Intervenors in their New Contention will be fully explored by the parties and Board during the public hearing.

Intervenors' contention that Entergy and the NRC Staff have deprived the public and Board the opportunity to fully review the AMPs in question thus is wholly unsupported, raises issues beyond the scope of this proceeding, and fails to establish a genuine dispute on a material issue of law or fact. Accordingly the New Contention does not meet the requirements of 10 C.F.R. § 2.309(f)(iii) to (vi) and should be denied as inadmissible.

4. The New Contention Grossly Mischaracterizes Entergy's AMPs and Related Regulatory Commitments

In addition to the deficiencies identified above, NYS-38/RC-TC-5 contains numerous factual errors that mischaracterize Entergy's planned aging management activities and further warrant dismissal of the New Contention.

a. The New Contention Misstates Facts Related to the Fatigue Monitoring Program

To the extent it seeks to challenge Entergy's Fatigue Monitoring Program and related commitments, the New Contention fails because its allegations are factually incorrect.

---

72 *See* Nov. 4, 2010 ASLB Ruling at 8, 11, 20.

73 *See id.* at 24-25.

74 *See id.* at 14-15.

First, Intervenors allege that Entergy previously claimed that it had identified the most limiting locations for its revised EAF analyses, but now "concedes that there may be more limiting locations."[75] Contrary to Intervenors' assertions, Entergy did not previously claim that it had performed a review to identify the most limiting reactor coolant system locations. Rather, as detailed in prior pleadings on this matter, Entergy stated that it assessed EAF effects on the six critical reactor coolant system pressure boundary component locations identified in NUREG/CR-6260, an approach which is fully consistent with then-current NRC and industry guidance, including NUREG-1801, Revision 1, and MRP-47.[76]

Second, Intervenors claim that Entergy has not disclosed the component locations that it will review to ensure that the NUREG/CR-6260 locations for which Entergy completed EAF analyses in July 2010 are the most limiting.[77] But Entergy has fully disclosed that information. Commitment 43 states that Entergy "will review design basis ASME Code Class 1 fatigue evaluations to determine whether the NUREG/CR-6260 locations that have been evaluated for the effects of the reactor coolant environment on fatigue usage are limiting."[78] Thus, the

---

[75] New Contention at 2.

[76] *See* Applicant's Motion for Summary Disposition of New York State Contentions 26/26A & Riverkeeper Technical Contentions 1/1A (Metal Fatigue of Reactor Components) at 4 (Aug. 25, 2010) ("One method acceptable to the Staff for satisfying this recommendation is to assess the impact of the reactor coolant environment (*i.e.*, EAF) on the six critical locations identified in NUREG/CR-6260."); Applicant's Answer to New and Amended Contention New York State 26/Riverkeeper TC-1B (Metal Fatigue) at 2 (Oct. 4, 2010) ("NRC guidance states that an applicant may assess EAF effects on the six critical RCS pressure boundary component locations identified in NUREG/CR-6260."); *see also id.* at 12 ("Consistent with the GALL Report, the new EAF analyses prepared in accordance with Entergy's Fatigue Monitoring Program have demonstrated that the 60-year-projected CUF_{en} values for the critical NUREG/CR-6260 component locations at IPEC are all less than 1.0."); *see also* GALL Report, Vol. 2, at X M-2; MRP-47, Materials Reliability Program: Guidelines for Addressing Fatigue Environmental Effects in a License Renewal Application, at 3-4 to 3-5 (Rev. 1, Sept. 2005), *available at* ADAMS Accession No. ML062690340.

[77] *See* New Contention at 2, 4.

[78] *See* SSER, App. A at A-24. As Entergy has explained before, any further EAF evaluations of these additional component locations are governed by the methods specified in the IPEC Fatigue Monitoring Program. *See* NL-08-021, Letter from F. Dacimo, Entergy, to NRC Document Control Desk, "License Renewal Application Amendment 2," (Jan. 22, 2008), *available at* ADAMS Accession No. ML080290659 [Attach. 7 to this Answer]. The Fatigue Monitoring Program provides that updated fatigue evaluations must use the analysis methods for determination of stresses and fatigue usage that conform to an NRC-endorsed Edition of the American Society of Mechanical Engineers (ASME) Boiler and Pressure Vessel Code, Section III Rules for Construction of Nuclear Power Plant Components Division 1 Subsection NB, Class 1 Components,

additional component locations to be evaluated are the reactor coolant system ("RCS") components that have ASME Class 1 fatigue analyses, which are discussed in LRA Section 4.3 and listed in LRA Tables 4.3-3 through 4.3-12.[79]

Third, Intervenors assert that Entergy will modify the WESTEMS™ computer model under "undisclosed circumstances, when it fits Entergy's convenience."[80] That assertion also is erroneous.[81] As an initial matter, Intervenors do not appear to understand the meaning of "user intervention" as it pertains to the WESTEMS™ computer program.[82] In brief, WESTEMS™ includes user controls that permit an appropriately trained and experienced analyst to reduce or eliminate redundant stress peaks, but does not modify the established methodology for stress peak and valley selection.[83] This form of user intervention is consistent with traditional (*i.e.*, non-automated) ASME Code Section III fatigue evaluations, in which the qualified analyst

---

Subarticles NB-3200 or NB-3600, as applicable to the specific component. It further states that IPEC will utilize design transients from IPEC Design Specifications to bound all operational transients, and that the numbers of cycles used for evaluation will be based on the design number of cycles and actual IPEC cycle counts projected out to the end of the license renewal period (60 years). The Commission recently noted that ASME requirements are "integral to our regulations." *S. Nuclear Operating Co.* (Vogtle Electric Generating Plant, Units 3 and 4), CLI-11-08, 74 NRC __, slip op. at 23 (Sept. 27, 2011).

79 *See* LRA at 4.3-1 to 4.3-18. Broadly speaking, these components (and subcomponents) include the reactor vessel, reactor vessel internals, pressurizer, steam generators, reactor coolant pumps, and control rod drive mechanisms, Class 1 heat exchangers, and Class 1 piping and components.

80 New Contention at 9.

81 *See* SSER at 4-2; App. A at A-25.

82 The concept of user intervention was recently explained in detail by another license renewal applicant, and Entergy incorporates that discussion by reference here. *See* Letter from P. Davison, PSEG Nuclear, LLC, to NRC Document Control Desk, "Close-out of the NRC Audit Associated with Use of WESTEMS™ Related to the Salem Nuclear Generating Station, Units 1 and 2 License Renewal Application" Encl. A at 6-8 (Feb. 24. 2011) ("PSEG Letter"), *available at* ADAMS Accession No. ML110600520 [Attach. 8 to this Answer]; *see also id.*, Encl. C, Method for Selecting Stress States for Use in an NB-3200 Fatigue Analysis,(2010) (PVP2010-25891, Proceedings of the ASME 2010 Pressure Vessels & Piping Division / K-PVP Conference, July 18-22, 2010, Bellevue, WA). Also, the WESTEMS™ User's Manual, Volume 2, a proprietary document that Entergy has disclosed to Intervenors, describes the WESTEMS™ stress peak and valley algorithm and associated analyst options.

83 *See* PSEG Letter Encl. A at 6.

manually selects the extremes of the stress cycle based on experience and review of the stress component or stress intensity histories produced by the various transients.[84]

Furthermore, the relevant license renewal commitment (Commitment 44) signals no intent by Entergy or its vendor to manipulate the WESTEMS™ code to obtain technically unjustified results. Such an action would violate NRC regulations and quality assurance procedures mandated by those regulations. In this regard, Intervenors also fail to acknowledge the purpose of Commitment 44, which, as the SSER explains, ensures that Entergy sufficiently documents and justifies any assumptions and engineering judgment used in future fatigue evaluations, and that the bases for the conclusions in the fatigue calculations are auditable and retrievable.[85]

b. The New Contention Misstates Facts Related to the Water Chemistry Control – Primary and Secondary Program

Intervenors mistakenly assert that Entergy has "acknowledged a problem" with primary water stress corrosion cracking ("PWSCC") for the nickel alloy or nickel-alloy clad steam generator divider plates exposed to reactor coolant, and conceded that its water chemistry control program is not sufficiently effective to meet AMP requirements.[86] This claim ignores the facts of record, as documented in Entergy's RAI responses and the SSER. As explained therein, Entergy replaced the original Westinghouse Model 44 steam generators with Model 44F steam generators at IP2 and IP3 in 2000 and 1989, respectively.[87] Further, Entergy stated that EPRI has extensively evaluated the foreign pressurized water reactor ("PWR") operating experience cited by the NRC in its RAI, and concluded that a cracked divider plate in a Westinghouse

---

84 *See id.*

85 SSER at 4-2.

86 New Contention at 2.

87 *See* SSER at 3-18; March 28, 2011 RAI Response Att. 1, at 21.

Model 44F SG is *not* a safety concern, and does *not* affect the design of the adjacent pressure boundary components.[88] EPRI has documented its findings in several reports, including one issued in December 2009.[89]

Thus, in its response to the Staff's RAI, Entergy did not concede that a "problem" with the IPEC steam generator divider plate assemblies exists now or will exist in the future. Nonetheless, to address the Staff's generic concerns regarding foreign PWR operating experience, and given EPRI's continuing technical studies of the *potential* for divider plate crack growth, Entergy committed to perform inspections of the IPEC steam generator divider plate assemblies to confirm the absence of PWSCC indications during the period of extended operation, notwithstanding its recent installation of new Model 44F steam generators at IPEC.[90] As such, Entergy is not relying on the completion of EPRI's ongoing studies, as Intervenors wrongly claim. Rather, it is relying on the steam generator divider plate assembly inspections defined in Commitment 41 to confirm the absence of PWSCC indications.

The fact that the Staff issued an RAI on this issue and that Entergy responded accordingly provides no basis for admitting the contention.[91] A petitioner seeking the admission of a contention must do more than cite a Staff RAI (or, in this case, an applicant commitment made in response to an RAI) and declare an application incomplete or deficient. The petitioner

---

88 *See* SSER at 3-18 to 3-19; March 28, 2011 RAI Response Att. 1, at 21. Thus, in view of the conclusions reached by EPRI, there also is no factual support for NYS's statement that "Industry experience as accumulated by EPRI and others has confirmed that water chemistry control is insufficient to prevent cracking in divider plates for steam generator tubes and that some of these divider plates are attached to components of the reactor that are critical for safety and that may be adversely affected by such cracking." New Contention at 7.

89 *See*, *e.g.*, EPRI, Report 1019040, Steam Generator Management Program: Steam Generator Divider Plate Cracking Engineering Study, (Dec. 2009), *available at* ADAMS Accession No. ML100491594 (nonproprietary version).

90 *See* SSER at 3-18 to 3-19, App. A at A-23 (discussing Commitment 41).

91 *Nuclear Mgmt. Co., LLC* (Monticello Nuclear Generating Plant), CLI-06-6, 63 NRC 161, 164 (2006) ("[W]e have held repeatedly that the mere issuance of a staff RAI does not establish grounds for a litigable contention.") (*citing Oconee*, CLI-99-11, 49 NRC at 336-37).

must review the application and identify *what* deficiencies exist and explain *why* the deficiencies raise material safety concerns.[92] Intervenors fail to meet this burden.

Commitment 41 states that Entergy will inspect the IP2 and IP3 steam generators using an examination technique that is capable of detecting PWSCC (a well-known and understood aging mechanism for which appropriate inspection techniques exist) in the steam generator divider plate assemblies. Entergy has committed to complete these inspections within the first ten years of the IP2 period of extended operation, and within the first refueling outage following the beginning of the IP3 period of extended operation (reflecting the different years in which the IP2 and IP3 steam generators were replaced with the new 44F models—2000 and 1989, respectively). Accordingly, there is no basis for Intervenors' claim that Entergy is relying on "unspecified" inspections or aging management activities.[93]

Intervenors and their experts, moreover, do not provide any valid, independent technical basis to show that Entergy's Water Chemistry Control – Primary and Secondary Program is inadequate to manage PWSCC, or that any potential PWSCC of steam generator divider plate assemblies cannot be detected through established inspection techniques.[94] While Intervenors also complain that the results of Entergy's inspections will not be available until after the period of extended operation commences,[95] there is no requirement that actual inspections be completed

---

[92] *Oconee*, CLI-99-11, 49 NRC at 336-37 (rejecting a proposed contention as inadmissible because it lacked specificity, presented no underlying support other than a general reference to assorted RAIs issued by the Staff, and did not show a genuine dispute with the Applicant on a material issue.).

[93] New Contention at 2.

[94] With regard to any alleged expert support, Dr. Hopenfeld does not discuss this issue in his declaration. Dr. Lahey, who provides no indication that he has any expertise related to cracking of nickel-alloy materials due to PWSCC, states only that "[t]he details of the inspections for primary water stress corrosion cracking (PWSCC) in the steam generator's divider plates will apparently not be available until well after extended operations are expected to begin." Lahey Decl. ¶ 5. He says nothing more on the subject. Dr. Lahey's reference to inspections of SG tube-to-tubesheet welds in paragraph 6 of his declaration relates to an entirely separate matter that is not even mentioned in the New Contention.

[95] *See* New Contention at 2, 7-8.

before license renewal.[96] The reasonable assurance finding required by 10 C.F.R. § 54.29(a) rests on Staff review and acceptance of actions that have been *or will be taken* by the applicant. Thus, Intervenors fail to establish a genuine material dispute with Entergy, pursuant to the requirements of 10 C.F.R. § 2.309(f)(1)(vi).

c. The New Contention Misstates Facts Related to the Reactor Vessel Internals Program

Intervenors contend that Entergy has submitted an AMP for reactor vessel internals "which it will not actually follow and has promised to follow an AMP the details of which are not disclosed."[97] They further claim that Entergy provides an inspection plan for reactor vessel internals that appears to rely on MRP-227 without identifying the revisions to it that NRC Staff has requested.[98] Not so. Entergy has submitted a plant-specific inspection plan that is based on MRP-227 and that includes the modifications requested by the Staff in its Safety Evaluation of MRP-227.

On July 14, 2010, Entergy filed LRA Amendment 9, which provided substantial additional details on the Reactor Vessel Internals Program that Intervenors alleged were lacking.[99] The Reactor Vessel Internals Program manages the effects of aging on reactor vessel internals using guidance developed from nearly a decade of extensive industry research and

---

96 *See*, *e.g.*, *Indian Point,* LBP-08-13, 68 NRC at 126 (rejecting NYS's argument in rejected contention NYS-23 that Entergy must conduct "baseline" inspections of lP2 and IP3 prior to the period of extended operation).

97 *See* New Contention at 3.

98 *See id.*

99 *See* NL-10-063, Letter from F. Dacimo, Entergy, to NRC Document Control Desk, "Amendment 9 to License Renewal Application (LRA) – Reactor Vessel Internals Program," Att. 1 (July 14, 2010) ("LRA Amendment 9"), *available at* ADAMS Accession No. ML102010102 [Attach. 9 to this Answer].

contained in MRP-227.[100] MRP-227 provides comprehensive inspection and evaluation guidelines for managing the effects of aging on PWR vessel internals.[101]

EPRI submitted MRP-227 to the NRC in January 2009 for review and approval as a topical report. The Staff completed its review earlier this year and, on June 22, 2011, issued its Safety Evaluation of MRP-227.[102] The Safety Evaluation concludes that MRP-227, as modified by seven conditions and limitations and eight licensee action items summarized in Section 4.0 of the Safety Evaluation, provides the basis for an acceptable plant-specific AMP for PWR vessel internals components, in accordance with 10 C.F.R. § 54.29(a)(1).[103] The Staff directed EPRI to publish the Staff-accepted version of MRP-227 and to designate it MRP-227-A.[104]

Shortly thereafter, the Staff issued RIS 2011-07, which provides guidance to licensees on how to meet their existing license renewal commitments related to reactor vessel internals aging management programs.[105] RIS 2011-07 also provides guidance concerning acceptable changes to license renewal commitments in view of the Staff's issuance of the Safety Evaluation of MRP-227 and EPRI's forthcoming issue of MRP-227-A.[106]

By letter dated August 22, 2011, Entergy stated that it would further supplement its LRA by September 28, 2011, to include an inspection plan for reactor vessel internals, consistent with

---

100 *See* LRA Amendment 9, at 82-84; *see also* MRP-227.

101 LRA Amendment 9, at 84.

102 *See* Letter from R. Nelson, NRC, to N. Wilmhurst, EPRI, "Final Safety Evaluation of EPRI Report, Materials Reliability Program Report 1016596 (MRP-227), Revision 0, Pressurized Water Reactor (PWR) Internals Inspection and Evaluation Guidelines" (June 22, 2011) ("MRP-227 Approval Letter"); *available a*t ADAMS Accession No. ML111600498 (enclosing "MRP-227 Safety Evaluation") [Attach. 10 to this Answer].

103 *See id.* at 1; MRP-227 Safety Evaluation at 24-30.

104 *See* MRP-227 Approval Letter at 1.

105 RIS 2011-07, at 1.

106 *See id.*

its prior commitment (Commitment 30).[107] In this letter, Entergy also stated that following the issuance of MRP-227-A, it will review the inspection plan to determine any need for revisions, and will modify the inspection plan to include the necessary revisions, if any.[108]

On September 28, 2011, consistent with RIS 2011-07 and its prior representations to the NRC, Entergy submitted the IPEC Reactor Vessel Internals Inspection Plan to meet LRA Commitment 30.[109] Counsel for Entergy forwarded an electronic copy of this submittal to NYS counsel the very next day. As even a cursory review reveals, this document contains a detailed inspection plan that is based on MRP-227 but specific to IP2 and IP3.[110]

Moreover, Section 3.6 ("Information Supplied in Response to the NRC Safety Evaluation of MRP-227") and Table 5-8 ("IPEC Response to the NRC Final Safety Evaluation of MRP-227") explicitly address the action items and conditions stated in the Staff's Safety Evaluation of MRP-227.[111] Entergy has thus provided a detailed plant-specific AMP and inspection plan that are based on the most current NRC-approved guidance,[112] and satisfy NRC requirements under 10 C.F.R. § 54.21(c)(1)(iii). Intervenors' claims that Entergy has not disclosed the details of its

---

107 *See* NL-11-101, Letter from F. Dacimo, Entergy, to NRC Document Control Desk, "Clarification for Request for Additional Information (RAI) Aging Management Programs," Att. 1 at 4 (Aug. 22, 2011), *available at* ADAMS Accession No. ML11243A085 ("This inspection plan will include the inspections specified in MRP- 227, as modified by the conditions and limitations and applicant/licensee action items in the NRC SER on MRP-227, Revision 0.") [Attach. 11 to this Answer].

108 *See id.*; *see also* SSER at 3-20. Counsel for Entergy understands that, earlier this month, the MRP Technical Advisory Group and Integration Committee approved a draft version of MRP-227-A and forwarded a copy to the NRC.

109 NL-11-107, Letter from F. Dacimo, Entergy, to NRC Document Control Desk, "License Renewal Application – Completion of Commitment #30 Regarding the Reactor Vessel Internals Inspection Plan" (Sept. 28, 2011), *available at* ADAMS Accession No. ML11280A121 (enclosing the Indian Point Energy Center Reactor Vessel Internals Inspection Plan) [Attach. 12 to this Answer].

110 In accordance with MRP-227, the IPEC Reactor Vessel Internals Inspection Plan includes: identification of items for inspection; specification of the type of examination appropriate for each degradation mechanism; specification of the required level of examination qualification; schedule of initial inspection and frequency of subsequent inspections; criteria for sampling and coverage; criteria for expansion of scope if unanticipated indications are found; inspection acceptance criteria; methods for evaluating examination results not meeting the acceptance criteria; updating the program based on industry-wide results; and contingency measures to repair, replace or mitigate. *See* Indian Point Energy Center Reactor Vessel Internals Inspection Plan at 1.

111 *See id.*, Att. at 21-22, 58.

112 *See* SSER at 3-20.

Reactor Vessel Internals Program or affirmatively addressed the revisions to MRP-227 requested by the NRC Staff are therefore unfounded.

In summary, Intervenors' allegations related to the IPEC Fatigue Monitoring Program, the Water Chemistry Control-Primary and Secondary Program, and Reactor Vessel Internals Program are factually erroneous and fail to establish a genuine dispute. The New Contention thus fails to meet the criteria of 10 C.F.R. § 2.309(f)(1)(v) and (vi) and should be rejected as inadmissible.

V. CONCLUSION

For the foregoing reasons, the Joint Motion and New Contention should be denied in their entirety.

Respectfully submitted,

Signed (electronically) by Martin J. O'Neill

Kathryn M. Sutton, Esq.
Paul M. Bessette, Esq.
Martin J. O'Neill, Esq.
MORGAN, LEWIS & BOCKIUS LLP
1111 Pennsylvania Avenue, N.W.
Washington, D.C. 20004
Phone: (202) 739-3000
Fax: (202) 739-3001
E-mail: ksutton@morganlewis.com
E-mail: pbessette@morganlewis.com
E-mail: martin.oneill@morganlewis.com

William C. Dennis, Esq.
Entergy Nuclear Operations, Inc.
440 Hamilton Avenue
White Plains, NY 10601
Phone: (914) 272-3202
Fax: (914) 272-3205
E-mail: wdennis@entergy.com

Counsel for Entergy Nuclear Operations, Inc.

Dated in Washington, D.C.
this 25th day of October 2011

UNITED STATES OF AMERICA
NUCLEAR REGULATORY COMMISSION

BEFORE THE ATOMIC SAFETY AND LICENSING BOARD

In the Matter of	)	Docket Nos. 50-247-LR and
	)	50-286-LR
ENTERGY NUCLEAR OPERATIONS, INC.	)	
	)	
(Indian Point Nuclear Generating Units 2 and 3)	)	
	)	October 25, 2011

ANSWER CERTIFICATION

Counsel for Entergy certifies that he has made a sincere effort to make himself available to listen and respond to the moving parties, and to resolve the factual and legal issues raised in the motion, and that his efforts to resolve the issues have been unsuccessful.

Signed (electronically) by Martin J. O'Neill

Martin J. O'Neill, Esq.
MORGAN, LEWIS & BOCKIUS LLP
1000 Louisiana St., Suite 4000
Houston, TX 77002
Phone: (713) 890-5710
Fax: (713) 739-5001
E-mail: martin.oneill@morganlewis.com

Counsel for Entergy Nuclear Operations, Inc.

TABLE OF ENTERGY NEW CONTENTION NYS-38/RK-TC-5 ATTACHMENTS

Attachment	Description
1	Letter from F. Dacimo, Entergy, to NRC Document Control Desk, "Response to Request for Additional Information on Aging Management Programs, Indian Point Nuclear Generating Unit Nos. 2 & 3" (Mar. 28, 2011)
2	OIG-A-17, Audit of NRC's Management of Licensee Commitments (Sept. 19, 2011)
3	NRC Inspection Manual, Temporary Instruction 2516/001, Review of License Renewal Activities (Mar. 30, 2011)
4	NRC Inspection Manual, Inspection Procedure 71003, Post-Approval Site Inspection for License Renewal at 1 (Oct. 31, 2008)
5	Letter Report from Said Abdel-Khalik, ACRS Chairman, to Chairman Jaczko, NRC, "Report on the Safety Aspects of the License Renewal Application for the Kewaunee Power Station (Jan. 7, 2011)
6	Regulatory Information Summary 2011-07, License Renewal Submittal Information for Pressurized Water Reactor Internals Aging Management (July 21, 2011)
7	NL-08-021, Letter from F. Dacimo, Entergy, to NRC Document Control Desk, "License Renewal Application Amendment 2" (Jan. 22, 2008)
8	Letter from P. Davison, PSEG Nuclear, LLC, to NRC Document Control Desk, "Close-out of the NRC Audit Associated with Use of WESTEMS™ Related to the Salem Nuclear Generating Station, Units 1 and 2 License Renewal Application" (Feb. 24. 2011)
9	NL-10-063, Letter from F. Dacimo, Entergy, to NRC Document Control Desk, "Amendment 9 to License Renewal Application (LRA) – Reactor Vessel Internals Program" (July 14, 2010)
10	Letter from R. Nelson, NRC, to N. Wilmhurst, EPRI, "Final Safety Evaluation of EPRI Report, Materials Reliability Program Report 1016596 (MRP-227), Revision 0, Pressurized Water Reactor (PWR) Internals Inspection and Evaluation Guidelines" (June 22, 2011)
11	NL-11-101, Letter from F. Dacimo, Entergy, to NRC Document Control Desk, "Clarification for Request for Additional Information (RAI) Aging Management Programs" (Aug. 22, 2011),
12	NL-11-107, Letter from F. Dacimo, Entergy, to NRC Document Control Desk, "License Renewal Application – Completion of Commitment #30 Regarding the Reactor Vessel Internals Inspection Plan" (Sept. 28, 2011)

Entergy New Contention NYS-38/RK-TC-5
Attachment 1

Entergy

Entergy Nuclear Northeast
Indian Point Energy Center
450 Broadway, GSB
P.O. Box 249
Buchanan, NY 10511-0249
Tel (914) 788-2055

Fred Dacimo
Vice President
License Renewal

NL-11-032

March 28, 2011

U.S. Nuclear Regulatory Commission
ATTN: Document Control Desk
Washington, DC 20555-0001

SUBJECT: Response to Request for Additional Information (RAI)
Aging Management Programs
Indian Point Nuclear Generating Unit Nos. 2 & 3
Docket Nos. 50-247 and 50-286
License Nos. DPR-26 and DPR-64

REFERENCE: 1. NRC Letter, "Request for Additional Information for the Review of the Indian Point Nuclear Generating Unit Numbers 2 and 3, License Renewal Application," dated February 10, 2011

Dear Sir or Madam:

Entergy Nuclear Operations, Inc is providing, in Attachment 1, the response to the referenced letter request for additional information (RAI). In addition, Attachment 1 includes a response to questions asked of other license renewal applicants regarding fatigue analysis software. Attachment 2 provides the latest list of regulatory commitments to include new commitments contained in this letter.

If you have any questions, or require additional information, please contact Mr. Robert Walpole at 914-734-6710.

A128
NRR

I declare under penalty of perjury that the foregoing is true and correct. Executed on March 28, 2011.

Sincerely,

FRD/cbr

Attachment: 1. Response to Request for Additional Information (RAI), Aging Management Programs

2. IPEC List of Regulatory Commitments (Rev. 13)

cc: Mr. William Dean, Regional Administrator, NRC Region I
Mr. Sherwin E. Turk, NRC Office of General Counsel, Special Counsel
Mr. Dave Wrona, NRC Branch Chief, Engineering Review Branch I
Mr. John Boska, NRR Senior Project Manager
Mr. Paul Eddy, New York State Department of Public Service
NRC Resident Inspector's Office
Mr. Francis J. Murray, Jr., President and CEO NYSERDA

ATTACHMENT 1 TO NL-11-032

LICENSE RENEWAL APPLICATION
RESPONSE TO REQUEST FOR ADDITIONAL INFORMATION (RAI)
AGING MANAGEMENT PROGRAMS

ENTERGY NUCLEAR OPERATIONS, INC.
INDIAN POINT NUCLEAR GENERATING UNIT NOS. 2 & 3
DOCKET NOS. 50-247 AND 50-286

INDIAN POINT NUCLEAR GENERATING UNIT NOS. 2 AND 3
LICENSE RENEWAL APPLICATION
RESPONSE TO REQUEST FOR ADDITIONAL INFORMATION (RAI)
AGING MANAGEMENT PROGRAMS

RAI 3.0.3.1.2-1

Background

In light of Operating Experience (OE) that has occurred coincident with and after the staff evaluation of the Indian Point License Renewal Application (LRA) and issuance of the Safety Evaluation Report (SER), the staff is concerned about the continued susceptibility to failure of buried (i.e., piping in direct contact with soil) and/or underground piping (i.e., piping not in direct contact with soil, but located below grade in a vault, pipe chase, or other structure where it is exposed to air and where access is limited) that is within the scope of 10 CFR 54.4 and subject to aging management for license renewal. The staff reviewed the LRA, SER and a letter dated July 27, 2009 from the applicant addressing buried pipe program modifications as a result of recent site operating experience. Based on the review of these documents subsequent to the recent industry OE, the staff does not have enough information to evaluate how Indian Point is implementing changes to their program based on the industry experience.

Issue

1. The LRA and supplemental material did not contain enough specifics on the planned inspections for the staff to determine if the inspections would be adequate to manage the aging effect for all types/materials of in-scope buried pipes (e.g., safety/code class and potential to release materials detrimental to the environment (e.g., diesel fuel and radioisotopes that exceed Environmental Protection Agency (EPA) drinking water standards)).

2. The staff believes that buried coated steel piping is more susceptible to potential failure if it is not protected by a cathodic protection system unless soil resistivity is greater than 20,000 ohm-cm.

3. The LRA and supplemental material did not contain enough specifics for the staff to understand the general condition of the backfill used in the vicinity of buried in-scope piping.

4. In a letter dated July 27, 2009, the applicant stated that it will employ qualified inspection methods with demonstrated effectiveness for detection of aging effects during the period of extended operation. The staff acknowledges that where examining buried pipe from the exterior surface is not possible due to plant configuration (e.g., the piping is located underneath foundations) it is reasonable to substitute a volumetric examination from the interior of the pipe provided the surface is properly prepared. However, beyond ultrasonic techniques, the staff is not aware of another reliable volumetric inspection methodology that is suitable for inspecting buried in scope piping. This is particularly true, in light of industry experience, with guided wave ultrasonic technology.

5. Based on a review of the LRA and UFSAR, it is not clear to the staff what in-scope systems (if any) have underground piping or if such piping will receive inspections consistent with the program described in LRA AMP B.1.11 External Surfaces Monitoring Program.

6. LRA Sections A.2.1.5 and A.3.1.5 states that corrosion risk will be determined through consideration of material, soil resistivity, drainage, presence of cathodic protection and type of coating. Given that cathodic protection has not been installed for all buried in-scope piping, the staff lacks sufficient information to conclude that the applicant's evaluation of soil corrosivity will provide reasonable assurance that in-scope buried piping will meet its intended license renewal function(s). Specifically, the staff is concerned with the following:

   a. While the applicant stated that it will include consideration of soil resistivity and drainage, it did not state that other important soil parameters would be included such as, pH, chlorides, redox potential, sulfates and sulfides.
   b. The applicant did not state how often it will conduct testing of localized soil conditions, nor provide the specific locations relative to buried in-scope piping that is not cathodically protected.
   c. The applicant did not state how they would integrate the various soil parameters into an assessment of corrosivity of the soil, such as using "Assessment of Overall Soil Corrosivity to Steel,"[1] or AWWA C105[2].
   d. The applicant did not specifically state how localized soil data will be factored into increased inspections, including the specific increase in the number of committed inspections by material type and location.

Request

1. Respond to the following:

   a. Describe how many in-scope buried piping segments for each material, code/safety-related piping, and potential to release materials detrimental to the environment category will be inspected.

Response for RAI 3.0.3.1.2-1 Part 1a

For the 10-year period prior to the PEO, the following table presents the planned inspections for buried piping subject to aging management review that is code/safety-related (Code/SR) or has the potential to release materials detrimental to the environment (hazmat). Inspections by material and category are indicated.

Material	Category	IP2 Inspections	IP3 Inspections
Carbon steel	Code/SR	13	14
Carbon steel	Hazmat	13	5
Stainless steel	Hazmat	N/A	6

b. For the 45 planned inspections prior to the period of extended operation:

i. How many will consist of an excavated direct visual inspection of the external surfaces of the buried pipe?
ii. What length of piping will be excavated and have a direct visual inspection conducted?

Response for RAI 3.0.3.1.2-1 Part 1b

The following table provides the number of planned direct visual inspections prior to the PEO. For planned direct visual inspections, future excavations will expose a minimum of 10 linear feet of pipe, for full circumferential inspections. Ten completed inspections have ranged from approximately five feet to more than ten feet averaging approximately eight linear feet.

Material	Category	IP2 Inspections	IP3 Inspections
Carbon steel	Code/SR	9	8
Carbon steel	Hazmat	11	3
Stainless steel	Hazmat	N/A	3

c. Understanding that the total number of inspections performed will be informed by plant-specific and industry operating experience, what minimum number of inspections of buried in-scope piping is planned during the 40 – 50 and 50 – 60 year operating periods? When describing the minimum number of planned inspections, differentiate between material, code/safety-related piping, and potential to release materials detrimental to the environment category piping inspection quantities of buried in-scope piping.

Response for RAI 3.0.3.1.2-1 Part 1c

IPEC will perform direct visual inspections during each 10-year period of the PEO in accordance with the following table. The table lists inspections for different materials, for code/safety-related piping, and for piping with the potential to release materials detrimental to the environment (indicated as hazmat.)

Material	**Category**	**IP2 Inspections**	**IP3 Inspections**
Carbon steel	Code/SR	6	6
Carbon steel	Hazmat	8	8
Stainless steel	Hazmat	N/A	2

If sample results indicate the soil is corrosive as described in the response to 2.c below, then the number of inspections for the carbon steel code/safety-related piping will be increased to eight and the number of inspections for the carbon steel hazmat piping will be increased to 12.

d. What specific inspections will be performed for the IP3 security generator propane tank and at what frequency?

Response for RAI 3.0.3.1.2-1 Part 1d

The nonsafety-related security generator system is credited for lighting during the response to fires in certain plant areas. Propane fuels the engine that drives the generator. Propane is non-toxic, non-caustic and will not create an environmental hazard if released as a liquid or vapor into water or soil. Monitoring the level of propane in the tank ensures the tank is capable of fulfilling its intended function. Consequently, only opportunistic inspections will be performed on the propane tank.

2. Respond to the following:

a. Confirm at IP2 that the service water system and at IP3 that the service water suction piping are the only in-scope steel piping systems currently protected by a cathodic protection (CP) system.

Response for RAI 3.0.3.1.2-1 Part 2a

The IP2 service water lines near the river were originally provided with cathodic protection, but the rectifiers were subsequently removed. For IP2, the only in-scope steel piping cathodically protected is a portion of the city water piping in the area where they cross over the Algonquin gas pipelines.

At IP3, the service water suction is not piping and is not buried, but is the pump column in each respective intake bay. The pump columns were originally provided with cathodic protection. The cathodic protection, however, was subsequently removed. The pump columns have been replaced with materials with greater resistance to corrosion.

For IP3, the only in-scope buried piping cathodically protected is the city water line over the Algonquin gas pipelines.

b. For those systems that are protected by a CP system:
   i. Has annual NACE survey testing been conducted, and if so, for how many years?
   ii. Have the output of the beds been trended, and if so, what are the results of the trending?
   iii. What is the availability of the cathodic protection system?

Response for RAI 3.0.3.1.2-1 Part 2b

A cathodic protection rectifier was installed in 2009 to protect the IP2 and IP3 city water lines near the Algonquin Gas pipelines.

i. **Annual NACE surveys have been performed on the system since its installation in November 2009.**
ii. **The rectifier output has been steady. Final testing and adjustment of the system occurred in July 2010.**

iii. **The system has been in service since installation. It was out of service in July 2010 for one week. System availability since installation in November 2009 has been greater than 98%.**

c. For buried in-scope steel piping systems that are not cathodically protected:

i. Justify why this piping will continue to meet or exceed the minimum design wall thickness throughout the period of extended operation, assuming that no coatings are applied to the piping, or

ii. Justify why the number of the planned inspections of this piping is sufficient to reasonably assure that this piping will continue to meet or exceed the minimum design wall thickness throughout the period of extended operation.

Response for RAI 3.0.3.1.2-1 Part 2c

The piping in question is coated which provides a significant barrier to corrosion. Inspections of excavated piping as discussed in the response to 3a below have found the coatings to be in good condition with no piping degradation. In addition, soil resistivity measurements as discussed in 3b below have shown the soil is non- aggressive. The number of planned inspections as discussed in 1a and the recent operating experience from site excavations provide reasonable assurance the piping will meet its license renewal intended functions during the PEO.

In addition, Entergy uses risk ranking to identify piping segments that are limiting (for example, closest to the water table) for direct visual inspection. Inspection results from these segments that show that the piping continues to maintain adequate wall thickness, provides reasonable assurance that similar piping in less limiting locations will maintain adequate wall thickness for the PEO.

To provide additional assurance that the piping will remain capable of performing its intended function, soil will be sampled prior to the PEO to confirm that the soil conditions are not aggressive. The number of inspections during the PEO will be based on the results the soil samples. The soil samples will be taken prior to the period of extended operation and at least once every 10 years thereafter to confirm the initial sample results. Soil samples will be taken at a minimum of two locations at least three feet below the surface near in-scope piping to obtain representative soil conditions for each system. The parameters monitored will include soil moisture, pH, chlorides, sulfates, and resistivity. American Water Works Association (AWWA) Standard C105 Appendix A will be used to determine corrosiveness of the soil in addition to soil resistivity. If the soil resistivity is < 20,000 ohm-cm or the soil scores higher than 10 points using AWWA C105, the number of inspections provided in the response to question 1.c will be increased to provide additional assurance that the piping can perform its design function during the PEO.

This approach provides reasonable assurance that piping will continue to meet its design function without cathodic protection.

3. Respond to the following:

   a. Provide details on any further excavations conducted since July 2009 that provide insight on the extent of condition of the quality of the backfill in the vicinity of buried pipes.

Response for RAI 3.0.3.1.2-1 Part 3a

Excavations since 2009:

- **Oct, 2009 – 16-inch and 10-inch city water lines from the city water storage tank were inspected during a plant modification to install cathodic protection for city water lines near the Algonquin gas pipelines. Excavation and inspection covered approximately two 10-foot sections of 16-inch piping and approximately eight feet of the 10-inch piping. Inspections found good coating condition and good quality backfill.**

- **Nov. 2009 - 10-inch fire protection header. Inspection of approximately eight feet of piping found good condition of the coating and good quality of the backfill.**

In summary, visual inspections have not identified coating failures. Other than the condensate storage lines, visual observation of the backfill, has not identified rocks or foreign material with a reasonable potential to damage the piping external coating.

   b. If there is no further information on the condition of the quality of backfill, justify why the planned inspections are adequate to detect potential degradation as a result of coating damage, particularly in steel buried pipe systems that are not protected by a CP system.

Response for RAI 3.0.3.1.2-1 Part 3b

The results of the visual inspections performed to date indicate that the quality of the backfill in contact with the coatings is generally good (i.e. no large, sharp rock material in contact with the coating). In addition to those inspection results, data will be acquired from future excavations and direct inspections that will provide input to determine the need for additional inspections or adjusted inspection frequencies.

4. Respond to the following:

   a. In absence of a qualified method, and until such time that one is demonstrated to be effective, what alternative inspection methods will Entergy employ when excavated direct visual examinations are not possible due to plant configuration.

Response for RAI 3.0.3.1.2-1 Part 4a

In absence of a qualified method, and until such time that one is demonstrated to be effective, Entergy has no plans to employ alternate inspection methods.

b. Justify why the methods identified in response to request 4a will be effective at providing reasonable assurance that the buried in-scope piping systems will meet their current licensing basis function.

Response for RAI 3.0.3.1.2-1 Part 4b

Entergy has no plans to employ alternate inspection methods

c. If a volumetric examination method is used, what percentage of interior axial length of the pipe will be inspected?

Response for RAI 3.0.3.1.2-1 Part 4c

Entergy has no plans to employ alternate volumetric examination methods.

5. For in-scope underground piping, respond to the following:

a. State what systems have underground piping and indicate the corresponding length of piping

Response for RAI 3.0.3.1.2-1 Part 5a

Underground piping and tanks are below grade, but are contained within a tunnel or vault such that they are in contact with air and are located where access for inspection is restricted. In-scope SSCs that are subject to aging management review at IPEC include no underground piping or tanks.

b. State how often and what quantity of underground piping for each system will be inspected by AMP, and indicate which AMP will be used.

Response for RAI 3.0.3.1.2-1 Part 5b

Not applicable.

6. Respond to the following for buried in-scope steel piping without cathodic protection:

   a. State what soil parameters will be included in the analysis of soil corrosivity beyond soil resistivity and drainage.
   b. State how often soil sampling will be conducted and in what locations.
   c. State how the various soil parameters will be integrated into an assessment of the corrosivity of the soil.
   d. State how localized soil conditions will be factored into increased inspections, including the specific increase in the number of committed inspections by material type and location.

Response for RAI 3.0.3.1.2-1 Part 6a

Two commonly used methods for assessing soil corrosivity are (1) determination of soil resistivity alone, and (2) based on AWWA C105, which considers the following soil parameters: soil resistivity, pH, redox potential, sulfides, and moisture (drainage). Both of these measures will be used for determining soil corrosivity.

Response for RAI 3.0.3.1.2-1 Part 6b

Soil samples will be taken prior to the period of extended operation and at least once every 10 years thereafter to confirm the initial sample results. Soil samples will be taken at a minimum of two locations at least three feet below the surface near the in-scope piping to obtain representative soil conditions for each system.

Response for RAI 3.0.3.1.2-1 Part 6c

AWWA C105 soil corrosivity assessment utilizes a point system, using five (5) soil parameters: soil resistivity, pH, redox potential, sulfides, and moisture (drainage). Accordingly, soils scoring more than 10 points are considered corrosive. Based on soil resistivity alone, a resistivity > 20,000 ohm-cm is considered non-corrosive.

Response for RAI 3.0.3.1.2-1 Part 6d

Initial piping inspection priority and re-inspection interval will be based on the overall assessment of a piping segment's impact risk and corrosion risk, based on the best available data. Soil will be sampled prior to the PEO to confirm that the soil conditions are not aggressive. The number of inspections during the PEO will be based on the results of this soil survey. The soil samples will be taken prior to the period of extended operation and at least once every 10 years thereafter to confirm the initial sample results. If the soil resistivity is < 20,000 ohm-cm and the soil scores higher than 10 points using AWWA C105, the number of inspections will be increased as discussed in the response to question 1.c to ensure the piping can perform its design function during the PEO. The additional inspections will be in locations with aggressive soil condition.

RAI 3.0.3.1.6-1

Background

NUREG-1801, Rev. 1, "Generic Aging Lessons Learned," (the GALL Report) addresses inaccessible medium voltage cables in Aging Management Program (AMP) XI.E3, "Inaccessible Medium Voltage Cables Not Subject to 10 CFR 50.49 Environmental Qualification Requirements." The purpose of this program is to provide reasonable assurance that the intended functions of inaccessible medium voltage cables (2 kV to 35 kV), that are not subject to environmental qualification requirements of 10 CFR 50.49 and are exposed to adverse localized environments caused by moisture while energized, will be maintained consistent with the current licensing basis. The scope of the program applies to inaccessible (in conduits, cable trenches, cable troughs, duct banks, underground vaults or direct buried installations) medium-voltage cables within the scope of license renewal that are subject to significant moisture simultaneously with significant voltage.

The application of AMP XI.E3 to medium voltage cables was based on the operating experience available at the time Revision 1 of the GALL Report was developed. However, recently identified industry operating experience indicates that the presence of water or moisture can be a contributing factor in inaccessible power cables failures at lower service voltages (480 V to 2 kV). Applicable operating experience was identified in licensee responses to Generic Letter (GL) 2007-01, "Inaccessible or Underground Power Cable Failures that Disable Accident Mitigation Systems or Cause Plant Transients," which included failures of power cable operating at service voltages of less than 2 kV where water was considered a contributing factor. Recently identified industry operating experience provided by NRC licensees in response to GL 2007-01 has shown: (a) that there is an increasing trend of cable failures with length in service beginning in the 6th through 10th years of operation and, (b) that moisture intrusion is the predominant factor contributing to cable failure. The staff has determined, based on the review of the cable failure distribution, that an annual inspection of manholes and a cable test frequency of at least every 6 years is a conservative approach to ensuring the operability of power cables and, therefore, should be considered.

In addition, recently identified industry operating experience has shown that some NRC licensees may experience cable manhole water intrusion events, such as flooding or heavy rain, that subjects cables within the scope of program for GALL Report XI.E3 to significant moisture. The staff has determined that event driven inspections of cable manholes, in addition to a 1 year periodic inspection frequency, is a conservative approach and, therefore, should be considered.

Issue

The staff has concluded, based on recently identified industry operating experience concerning the failure of inaccessible low voltage power cables (480 V to 2 kV) in the presence of significant moisture, that these cables can potentially experience age related degradation. The staff noted that the applicant's Inaccessible Medium-Voltage Cables Program does not address inaccessible low voltage power cables [400 V (nominally 480 V) to 2 kV inclusive]. In addition, more frequent cable test and cable manhole inspection frequencies (e.g., from 10 and two years to six and one year, respectively) should be evaluated to ensure that the Non-EQ Inaccessible Medium Voltage Cable program test and inspection frequencies reflect industry and plant-specific operating experience and that test and inspection frequencies may be increased based on future industry and plant-specific operating experience.

Request

Provide a summary of your evaluation of recently identified industry operating experience and any plant-specific operating experience concerning inaccessible low voltage power cable failures within the scope of license renewal (not subject to 10 CFR 50.49 environmental qualification requirements), and how this operating experience applies to the need for additional aging management activities at your plant for such cables.

Response for RAI 3.0.3.1.6-1

As reported in the NRC's November 12, 2008 summary of licensee responses to GL 2007-01, the number of cable failures is a small percentage of the total number of cables in these categories for all nuclear plants.

Indian Point responded to GL 2007-01 on May 7, 2007 (ML071350410), and reported that Indian Point Unit 3 had experienced two cable failures, and that Unit 2 had experienced no failures based on the scope criteria set forth in GL 2007-01. Both Unit 3 failures involved low-voltage power cables, and were due to mechanical damage rather than the effects of aging. A search of plant-specific OE since the May 7, 2007 response to GL 2007-01 identified one Unit 2 failure and no Unit 3 failures of low or medium-voltage power cables that are in the scope of the maintenance rule or license renewal rule. Excavation activities associated with a plant modification damaged a Unit 2 13.8kV off-site power feeder cable causing the Unit 2 cable failure. The effects of aging did not cause the cable failure.

Indian Point is revising its Non-EQ Inaccessible Medium-Voltage Cable Program to include low-voltage power cables that may be exposed to significant moisture.

1. Explain how Entergy will manage the effects of aging on inaccessible low voltage power cables within the scope of license renewal and subject to aging management review; with consideration of recently identified industry operating experience and any plant-specific operating experience. The discussion should include assessment of your aging management program description, program elements (i.e., Scope of Program, Parameters Monitored/Inspected, Detection of Aging Effects, and Corrective Actions), and FSAR summary description to demonstrate reasonable assurance that the intended functions of inaccessible low voltage power cables subject to adverse localized environments will be maintained consistent with the current licensing basis through the period of extended operation.

Response for RAI 3.0.3.1.6-1 Part 1

Indian Point will include low-voltage power cables in the non-EQ inaccessible medium-voltage cable program, will increase cable testing and manhole inspedction frequency, and will provide for manhole inspections after events that could cause flooding of inaccessible cable raceways. The program will include provisions to increase cable testing and manhole inspection frequency based on the results of testing and inspections.

The following changes to LRA Sections A.2.1.22 and B.1.23 provide for the inclusion of low-voltage power cable in the Non-EQ Inaccessible Medium-Voltage Cable program.

A.2.1.22 Non-EQ Inaccessible Medium-Voltage Cable Program

The Non-EQ Inaccessible Medium-Voltage Cable Program is a new program that entails periodic and event-driven inspections for water collection in cable manholes, and periodic testing of cables. In scope medium-voltage cables (cables with operating voltage from 2kV to 35kV) and low-voltage power cables (400 V to 2 kV) exposed to significant moisture ~~and voltage~~ will be tested at least once every ~~ten~~ six years to provide an indication of the condition of the conductor insulation. Test frequencies are adjusted based on test results and operating experience. The program includes periodic inspections for water accumulation in manholes at least once every ~~two~~ years (annually). In addition to the periodic manhole inspections, inspection of event-driven occurrences, such as heavy rain or flooding will be performed. Inspection frequency will be increased as necessary based on evaluation of inspection results.

The Non-EQ Inaccessible Medium-Voltage Cable Program will be implemented prior to the period of extended operation. This new program will be implemented consistent with the corresponding program described in NUREG-1801, Section XI.E3, Inaccessible Medium-Voltage Cables Not Subject To 10 CFR 50.49 Environmental Qualification Requirements.

B.1.23 NON-EQ INACCESSIBLE MEDIUM-VOLTAGE CABLE

Program Description

The Non-EQ Inaccessible Medium-Voltage Cable Program is a new program that entails periodic inspections for water collection in cable manholes and periodic testing of cables. In scope medium-voltage cables (cables with operating voltage from 2kV to 35kV) and low-voltage power cables (400 V to 2 kV) exposed to significant moisture ~~and voltage~~ will be tested at least once every ~~ten~~ six years to provide an indication of the condition of the conductor insulation. Test frequencies will be adjusted based on test results and operating experience. The program includes inspections for water accumulation in manholes at least once every ~~two~~ years (annually). In addition to the periodic manhole inspections, inspection for event-driven occurrences, such as heavy rain or flooding will be performed. Inspection frequency will be increased as necessary based on evaluation of inspection results.

This program will be implemented prior to the period of extended operation.

Operating Experience

The Non-EQ Inaccessible Medium-Voltage Cable Program is a new program. Industry and plant-specific operating experience will be considered when implementing this program. Industry operating experience that forms the basis for the program is described in the operating experience element of the NUREG-1801 program description. IPEC plant-specific operating experience is not inconsistent with the operating experience in the NUREG-1801 program description.

The inspection frequency for manholes is based on plant-specific operating experience with cable wetting or submergence in manholes (i.e., the inspection is performed periodically based on water accumulation over time and events such as heavy rain or flooding).

The IPEC program is based on the program description in NUREG-1801, which in turn is based on industry operating experience. As such, operating experience provides assurance that the Non-EQ Inaccessible Medium-Voltage Cable Program will manage the effects of aging such that applicable components will continue to perform their intended functions consistent with the current licensing basis through the period of extended operation.

Conclusion

The Non-EQ Inaccessible Medium-Voltage Cable Program will be effective for managing aging effects since it will incorporate proven monitoring techniques and industry and plant-specific operating experience. The Non-EQ Inaccessible Medium-Voltage Cable Program assures that the effects of aging will be managed such that the applicable components will continue to perform their intended functions consistent with the current licensing basis through the period of extended operation.

Commitment 15

Implement the Non-EQ Inaccessible Medium-Voltage Cable Program for IP2 and IP3 as described in LRA Section B.1.23.

This new program will be implemented consistent with the corresponding program described in NUREG-1801, Section XI.E3, Inaccessible ~~Medium-Voltage~~ Power Cables Not Subject To 10 CFR 50.49 Environmental Qualification Requirements.

2. Provide an evaluation showing that the proposed Non-EQ Inaccessible Medium-Voltage Cable program test and inspection frequencies, including event-driven inspections, incorporate recent industry and plant-specific operating experience for both inaccessible low and medium voltage cable.

Response for RAI 3.0.3.1.6-1 Part 2

The Non-EQ Inaccessible Medium-Voltage Cable Program has been revised to include low-voltage inaccessible power cables. The cable test and manhole inspection frequencies have been increased in response to recent industry operating experience and license renewal correspondence. Provisions have been added to the program to increase the test and inspection frequencies if warranted by plant-specific test and inspection results or industry operating experience. Event-driven inspections have been added to the program based on recent industry license renewal correspondence. No recent adverse plant-specific operating experience has been identified that is inconsistent with industry operating experience. Therefore, the revised program incorporates recent operating experience associated with inaccessible low- and medium-voltage power cables.

3. In Commitment 40, Entergy committed to evaluate plant-specific and industry operating experience prior to entering the period of extended operation. Explain how the proposed Inaccessible Medium Voltage Program will continue to ensure that future industry and plant-specific operating experience will be incorporated into the program such that inspection and test frequencies may be increased based on test and inspection results.

Response for RAI 3.0.3.1.6-1 Part 3

The revised Non-EQ Inaccessible Medium Voltage Cable Program specifies that cable testing frequency and manhole inspection frequency will be adjusted as necessary based on the results of cable testing and manhole inspections. Indian Point will incorporate lessons learned from future industry and plant-specific operating experience, including plant-specific test and inspection results during implementation of the Non-EQ Inaccessible Medium Voltage Program.

RAI 3.0.3.1.10-1

Background

By letter dated July 26, 2010, the applicant provided clarification of LRA Section B.1.28, "One Time Inspection – Small Bore Piping." The applicant stated that its Inservice Inspection (ISI) Program includes periodic volumetric examinations on ASME Class 1 small bore socket welds. The applicant further stated that the inspection volume is in accordance with guidelines established in MRP-146 which recommends examination of the base metal one-half inch beyond the toe of the weld. The applicant also cited recent plant-specific operating experience in which leakage was detected in a Class 1 socket weld, and referenced the related Licensee Event Report (LER#2010-004-00). The staff noted that the applicant did not provide information that supports its conclusion on the failure mechanism.

The staff noted that for IP2, the facility operating license (DPR-26) expires at midnight September 28, 2013, and for IP3, the facility operating license (DPR-64) expires at midnight December 12, 2015. The staff further noted that both IP2 and IP3 will be in their 4th ISI interval upon entering the period of extended operation.

Issue

The staff noted that the inspections performed by its Inservice Inspection Program for ASME Class 1 small bore socket welds only include the base metal, one-half inch beyond the toe of the weld. It is not clear to the staff how an inspection of the base metal, one-half inch beyond the toe of the weld, is capable of detecting cracking in the ASME Class 1 small bore socket weld metal.

Request

1. Explain how Entergy will manage aging (i.e., cracking) in the weld metal of ASME Code Class 1 small bore socket welds.

Response for RAI 3.0.3.1.10-1 Part 1

IPEC will continue to perform visual examination (VT-2) as is required by ASME Code Case N-578, to manage the effects of aging on the ASME Class 1 small-bore socket welds for both units. In addition, IPEC will implement the One-Time Inspection - Small Bore Piping Program for IP3 and for butt welds on IP2.

For butt welds, IP2 will implement the One-Time Inspection - of ASME Code Class 1 Small Bore Piping Program, which manages cracking due to aging effects. The program will include volumetric examinations of small-bore piping butt weld metal on locations selected by the ISI Program using risk-informed methods to detect potential indications of cracking due to thermal fatigue and stress corrosion. For IP2, IPEC will perform volumetric examination of the weld metal of ten socket welds in 2012 and of at least ten socket welds during each 10-year period of the period of extended operation. These inspections will be included in the IP2 ISI Program.

IP3 has performed volumetric inspections on 25 small-bore piping welds, 21 of which were socket welds. Inspections on 18 of the welds inspected the root of the socket weld metal. The remaining three welds were inspected in accordance with MRP-146 (the base metal ½ inch from the weld). Sixteen (16) inspections had no recordable indications. Two socket welds had recordable indications and were cut out and destructively tested by EPRI. Metallographic evaluation determined that the recordable indications noted during the NDE inspections were root anomalies due to lack of fusion (LOF) during the welding process and were not part of the effective throat of the welds.

2. Clarify if the inspection volume selected for the proposed volumetric examinations of ASME Class 1 small bore butt welds, performed by the One Time Inspection – Small Bore Piping Program, includes the weld metal. If it does not include the weld metal, justify that the inspection volume is sufficient and capable of detecting cracking in the ASME Code Class 1 small bore butt weld metal.

Response for RAI 3.0.3.1.10-1 Part 2

The inspection volume selected for the proposed volumetric examination of ASME Class 1 small bore butt welds, performed under the One Time Inspection – Small Bore Piping Program, includes the weld metal. The inspection volume of the completed volumetric examinations of ASME Class 1 small bore butt welds, credited for the One Time Inspection – Small Bore Piping Program, included the weld metal.

3. Based on the operating experience at Indian Point, justify that an aging management program that performs periodic volumetric inspections of the weld metal for ASME Code Class 1 small bore socket and butt welds is not necessary. In lieu of this justification provide an aging management program that includes periodic volumetric inspections to manage cracking in small-bore piping and the associated weld metal (socket weld metal and butt weld metal).

Response for RAI 3.0.3.1.10-1 Part 3

The operating experience at IPEC indicates no Class 1 small bore socket weld or butt weld failures due to stress corrosion, cyclical loading (thermal, mechanical, and vibration fatigue), or thermal stratification and thermal turbulence. A review of operating experience at IP3 identified no leaks from small bore Class 1 piping socket welds. In approximately 38 years of operation, IP2 has experienced five leaks from small bore Class 1 socket welds, but cracking has never been identified as the cause. Rounded or pin hole defects caused three leaks, including the May 2010 leak, and mechanical damage caused a fourth. No cause was determined for the fifth leak which occurred in 1980, over 30 years ago. Nevertheless, IPEC performs periodic volumetric inspections of ASME Code Class 1 small bore socket welds. Ongoing inspections under the IPEC Inservice Inspection Program include periodic volumetric inspections of small bore piping welds on both units as determined by risk-informed selection criteria in the program. IPEC will volumetrically inspect the weld metal of at least ten socket welds in 2012 and at least ten socket welds during each 10-year period of the period of extended operation.

4. Whether a one-time inspection program or periodic inspection program is selected, clarify the implementation schedule of the inspections for ASME Code Class 1 small-bore piping including the associated welds (socket welds and butt welds).

Response for RAI 3.0.3.1.10-1 Part 4

For IP2, the schedule for ASME Class 1 small-bore piping inspections is contained in the IP2 ISI Program. In 2006, two butt welds were inspected. In 2010, three butt welds were inspected. Ten small-bore piping socket welds will be inspected in 2012 and one butt weld will be inspected prior to the period of extended operation. These future inspections will include the weld metal. In addition to the ten socket weld inspections in 2012, IPEC will perform volumetric weld metal inspections of ten socket welds during each 10-year period of the period of extended operation.

For IP3, One-Time Inspections have been completed. The associated inspections were completed from 2003 through 2007. In 2003, three welds were inspected; two socket welds and one butt weld. In 2005, 18 welds were inspected; 16 socket welds and two butt welds. In 2007, four welds were inspected; three socket welds and one butt weld. Thus, the total numbers of welds inspected was 21 socket welds and four butt welds. Eighteen of the socket weld inspections were volumetric inspections of the weld metal, two of which underwent subsequent destructive examinations. Because more information can be obtained from a destructive examination than from a nondestructive examination, each weld destructively examined is considered equivalent to two welds volumetrically examined. Counting the destructive examinations as two each, the number of volumetric socket weld inspections is 20 welds, which represents 6% of the population of 333 Class 1 small-bore piping socket welds at IP3. The four butt weld inspections, which inspected the weld metal, constitute 4.1% of the population of 96 butt welds.

RAI 3.0.3.1.10-2

Background

SRP-LR Section A.1.2.3.4 states that when sampling is used a basis should be provided for the inspection population and sample size.
The "monitoring and trending" program element of GALL AMP XI.M35 recommends that the volumetric inspection should be performed at a sufficient number of locations to assure an adequate sample. Furthermore, this number, or sample size, will be based on susceptibility, inspectability, dose considerations,

operating experience, and limiting locations of the total population of ASME Code Class 1 small bore piping locations.
Issue

The staff noted that the applicant did not provide its basis for the sample size that it selected. Specifically, the weld populations and the sample size were not provided to the staff, therefore it is not clear to the staff what percentage of ASME Code Class 1 welds, both full penetration welds and socket welds, will be inspected. It is also not clear to the staff if a sufficient number of locations will be selected to ensure an adequate sample.

Request

Provide the total populations of ASME Code Class 1 small bore butt welds and socket welds at Indian Point for each unit. Justify that the number of samples, for both butt welds and socket welds, is sufficient to ensure that an adequate sample is selected for inspections to be performed.

Response for RAI 3.0.3.1.10-2

There are 433 small bore socket welds and 195 small bore butt welds at IP2. There are 333 small bore socket welds and 96 small bore butt welds at IP3.

Of the 195 small bore butt welds on IP2, 5 butt welds have been inspected. All five weld inspections included the weld metal. In addition one butt weld (including the weld metal) will be inspected in 2012, thereby yielding a total sample size of 3%. Of the 333 small bore socket welds on IP3, 21 welds have been inspected. Of those 21 weld inspections, 18 inspections included the weld metal, two of which underwent subsequent destructive examinations. Counting the destructive examinations as two each, the total volumetric socket weld inspections is 20 welds, which represents 6% of the population of 333 Class 1 small-bore piping socket welds at IP3. Of the 96 small bore butt welds, four welds, or 4.1% of butt welds, have been inspected. All four weld inspections included the weld metal. Since IPEC has had no failures of small bore piping welds due to cracking resulting from stress corrosion, cyclical loading (thermal, mechanical, and vibration fatigue), or thermal stratification and thermal turbulence, the numbers of inspections constitute an adequate sample of the small bore weld populations.

Of the 433 small bore socket welds on IP2, 10 welds will be inspected (including the weld metal) in 2012 and 10 welds will be inspected during each 10-year period of the period of extended operation.

Commitment #46
Include in the IP2 ISI Program volumetric weld metal inspections of ten socket welds in 2012 and of at least ten socket welds during each 10-year period of the period of extended operation.

RAI 3.0.3.2.10-1

Background

NRC staff has determined that masonry walls that are within the scope of license renewal should be visually examined at least every five years, with provisions for more frequent inspections in areas where significant loss of material or cracking is observed.
Issue

The LRA did not discuss the inspection interval for in scope masonry walls.

Request

Provide the inspection interval for in-scope masonry walls. If the interval exceeds five years, clearly explain why and how the interval will ensure that there is no loss of intended function between inspections.

Response for RAI 3.0.3.2.10-1

The inspection interval for masonry walls within the scope of license renewal is every five years.

RAI 3.0.3.2.15-1

Background

NRC staff has determined that adequate acceptance criteria for the Structures Monitoring Program should include quantitative limits for characterizing degradation. Chapter 5 of ACI 349.3R provides acceptable criteria for concrete structures. If the acceptance criteria in ACI 349.3R are not used, the plant-specific criteria should be described and a technical basis for deviation from ACI 349.3R should be provided.

Issue

The LRA did not clearly identify quantitative acceptance criteria for the Structures Monitoring Program inspections.

Request

1. Provide the quantitative acceptance criteria for the Structures Monitoring Program. If the criteria deviate from those discussed in ACI 349.3R, provide technical justification for the differences.

Response for RAI 3.0.3.2.15-1 Part 1

For concrete structures, the Structures Monitoring Program (SMP) has a responsible engineer with the appropriate education and experience to identify and evaluate existing conditions using the appropriate industry standards for concrete structures, including ACI standards. Prior to the period of extended operation (PEO), Entergy will enhance the SMP to include more detailed quantitative acceptance criteria of ACI 349.3R, "Evaluation of Existing Nuclear Safety-Related Concrete Structures" for concrete structures.

Commitment

Entergy is revising the following commitment (Commitment 25) for the Structures Monitoring Program for implementation prior to the PEO.

Enhance the Structures Monitoring Program to include more detailed quantitative acceptance criteria for inspections of concrete structures in accordance with ACI 349.3R, "Evaluation of Existing Nuclear Safety-Related Concrete Structures".

2. If quantitative acceptance criteria will be added to the program as an enhancement, state whether Entergy plans to conduct an inspection with the quantitative acceptance criteria prior to the period of extended operation. If there are no plans to conduct an inspection with quantitative acceptance criteria prior to entering the period of extended operation, explain how Entergy plans to monitor and trend data.

Response for RAI 3.0.3.2.15-1 Part 2

Program procedures specify that the inspection engineer be a degreed engineer or registered professional engineer, knowledgeable or trained in the design, evaluation, and performance requirements of structures, with at least 5 years structural design/analysis/field evaluation experience. Using applicable industry codes and standards, the responsible engineer has adequate training and education to determine the acceptability of identified conditions using appropriate references, which may include ACI 349.3R.

While all the detailed quantitative acceptance criteria of ACI 349.3R are not in the existing SMP procedures, the knowledge and experience of the qualified inspection engineers performing regularly scheduled inspections provides reasonable assurance of continued functionality of the concrete structures at IPEC. The enhanced inspection criteria from ACI 349.9-3R will be adopted prior to the PEO and will be applied during regularly scheduled inspections.

The enhancement described in part 1 (above) to include more detailed acceptance criteria of ACI 349.3R does not affect ongoing monitoring and trending of data collected during the inspections. Although the acceptance criteria of ACI 349.3R are not explicitly identified in inspection procedures, qualified inspection personnel have a working knowledge of those criteria. Based on their knowledge and experience, inspectors identify and record degradation outside the acceptance criteria of ACI 349.3R discovered during the inspections so that future monitoring can determine a trend. The documentation includes critical measurements, i.e., crack width, length, depth, or area and depth of spall, so that future inspectors can determine the degree of change, if any. Prior to performing inspections, inspection engineers perform a thorough review of previous inspection reports to identify existing deficiencies. Photos, checklists, notes, etc. are used to determine if further deterioration has occurred. This process for monitoring and trending inspection data will continue during the period of extended operations.

RAI 3.1.2.2.13-1

Background

SRP-LR Section 3.1.2.2.13 identifies that cracking due to primary water stress corrosion cracking (PWSCC) could occur in PWR components made of nickel alloy and steel with nickel alloy cladding, including reactor coolant pressure boundary components and penetrations inside the RCS such as pressurizer heater sheathes and sleeves, nozzles, and other internal components. GALL Report Volume 2 Item IV.D1-06 recommends Chapter XI.M2, "Water Chemistry," for PWR primary water to manage the aging effect of cracking in the nickel alloy steam generator (SG) divider plate exposed to reactor coolant.

LRA Table 3.1.1, item 3.1.1-81, credits the Water Chemistry Control – Primary and Secondary Program to manage cracking due to primary stress corrosion cracking in nickel-alloy steam generator primary channel head divider plate exposed to reactor coolant in the steam generators, and LRA Table 3.1.1, Item 82, indicates that the SG primary side divider plates are composed of nickel alloy.

Unit 2 FSAR Section 4.2.2.3 and Table 4.2-1 describe the construction materials for the replacement Model 44F steam generators. The staff noted that there is no information about the construction materials of the divider plate assembly for the Unit 2 steam generators.

Unit 3 FSAR Section 4.2.2 and Table 4.2-1 describe the construction materials for the replacement Model 44F steam generators. The staff noted that there is no information about the construction materials of the divider plate assembly for the Unit 3 steam generators.

Issue

In some foreign steam generators with a similar design to that of Indian Point Units 2 and 3 steam generators, extensive cracking due to PWSCC has been identified in SG divider plate assemblies made with Alloy 600, even with proper primary water chemistry. Specifically, cracks have been detected in the stub runner, very close to the tubesheet/stub runner weld and with depths of almost a third of the divider plate thickness. Therefore, the staff noted that the Water Chemistry Control – Primary and Secondary Program may not be effective in managing the aging effect of cracking due to PWSCC in SG divider plate assemblies.

Although these SG divider plate assembly cracks may not have a significant safety impact in and of themselves, such cracks could affect adjacent items that are part of the reactor coolant pressure boundary, such as the tubesheet and the channel head, if they propagate to the boundary with these items. For the tubesheet, PWSCC cracks in the divider plate could propagate to the tubesheet cladding with possible consequences to the integrity of the tube-to-tubesheet welds. For the channel head, the PWSCC cracks in the divider plate could propagate to the SG triple point and potentially affect the pressure boundary of the SG channel head.

Request

1. Discuss the materials of construction of the Units 2 and 3 SG divider plate assemblies, including the welds within these assemblies and to the channel head and to the tubesheet.

Response for RAI 3.1.2.2.13-1 Part 1

At IP2 and IP3 the divider plates are Inconel 600 (ASME-SB-168). It is conservatively assumed that the weld materials are the associated Alloy 600 weld materials.

2. If any constitutive/weld material of the SG divider plate assemblies is susceptible to cracking (e.g., Alloy 600 or the associated Alloy 600 weld materials), explain how Entergy plans to manage PWSCC of the SG divider plate assemblies to prevent the propagation of cracks into other items that are part of the RCPB, whereby it challenges the integrity of the adjacent items.

Response for RAI 3.1.2.2.13-1 Part 2

At IP2 the original Westinghouse Model 44 steam generators were replaced with Model 44F steam generators in 2000. At IP3 the original Westinghouse Model 44 steam generators were replaced with Model 44F steam generators in 1989.

The Electric Power Research Institute (EPRI) has extensively evaluated the foreign operating experience with divider plate cracking in their reports dated June 2007, November 2008, and December 2009, and concluded that a cracked divider plate in a Westinghouse Model F SG is not a safety concern, and does not affect the design of the adjacent pressure boundary components.

The industry plans are to study the potential for divider plate crack growth and develop a resolution to the concern through the EPRI Steam Generator Management Program (SGMP) Engineering and Regulatory Technical Advisory Group. This industry-lead effort is expected to begin in 2011 and be completed within two years.

Recognizing that the EPRI SGMP resolution of this issue is under development, Entergy will inspect all IPEC steam generators to assess the condition of the divider plate assembly. The examination technique used will be capable of detecting PWSCC in the steam generator divider plate assembly welds. The steam generator divider plate inspections will be completed within the first ten years of the PEO. (Commitment 41)

RAI 3.1.2.2.16-1

Background

SRP-LR Section 3.1.2.2.16 identifies that cracking due to primary water stress corrosion cracking (PWSCC) could occur on the primary coolant side of PWR steel steam generator (SG) tube-to-tube sheet welds made or clad with nickel alloy. The GALL Report recommends ASME Section XI ISI and control of water chemistry to manage this aging effect and recommends no further aging management review for PWSCC of nickel alloy if the applicant complies with applicable NRC Orders and provides a commitment in the FSAR supplement to implement applicable (1) Bulletins and Generic Letters and (2) staff-accepted industry guidelines. In GALL Report Revision 1, Volume 2, this aging effect is addressed in item IV.D2-4, applicable only to once-through SGs, but not to recirculating SGs.

The staff noted that ASME Code Section XI does not require any inspection of the tube-to-tubesheet welds. In addition, there are no NRC Orders or bulletins requiring examination of this weld. However, the staff's concern is that, if the tubesheet cladding is Alloy 600 or the associated Alloy 600 weld materials, the tube-to-tubesheet weld region may have insufficient Chromium content to prevent initiation of PWSCC. Similarly, this concern applies to SG tubes made from Alloy 690TT. Consequently, such a PWSCC crack initiated in this region, close to a tube, could propagate into/through the weld, causing a failure of the weld and of the reactor coolant pressure boundary, for both recirculating and once-through steam generators.

In LRA Table 3.1.1, item 3.1.1-35, the applicant stated that the corresponding GALL Report line applies to once-through steam generators and was used as a comparison for the steam generator tubesheets. The applicant further stated that for the steel with nickel alloy clad steam generator tubesheets, cracking is managed by the Water Chemistry Control – Primary and Secondary and Steam Generator Integrity Programs. In LRA Section 2.3.1.4, the applicant described that the Unit 2 replacement Westinghouse Model 44 steam generator tubes are fabricated from Alloy 600TT and the Unit 3 replacement Westinghouse Model 44 steam generator tubes are fabricated from Alloy 690TT. The applicant also described that the tubesheet surfaces in contact with reactor coolant are clad with Inconel, and the tube-to-tube sheet joints are welded.

Issue
Unless the NRC has approved a redefinition of the pressure boundary in which the autogenous tube-to-tubesheet weld is no longer included, or the tubesheet cladding and welds are not susceptible to PWSCC, the staff considers that the effectiveness of the primary water chemistry program should be verified to ensure PWSCC cracking is not occurring. Moreover, it is not clear to the staff how the Steam Generator Integrity Program is able to manage PWSCC of the tubesheet cladding, including the tube-to-tubesheet welds.

Request

1a. For Unit 2 SGs, clarify whether the tube-to-tubesheet welds are included in the reactor coolant pressure boundary or alternate repair criteria have been permanently approved.

Response for RAI 3.1.2.2.16-1 Part 1a

At IP2 the tube to tubesheet welds are included in the RCS pressure boundary. IP2 does not employ any tubesheet region alternate repair criterion.

1b. If the SGs do not have permanently approved alternate repair criteria, justify how your Steam Generator Integrity Program is capable to manage PWSCC in tube-to-tubesheet welds, or provide a plant-specific AMP that will complement the primary water chemistry program, in order to verify the effectiveness of the primary water chemistry program and ensure that cracking due to PWSCC is not occurring in tube-to-tubesheet welds.

Response for RAI 3.1.2.2.16-1 Part 1b

IP2 will address the potential failure of the steam generator reactor coolant pressure boundary due to PWSCC cracking of tube-to-tubesheet welds via one of two options, an analysis or an inspection. (Commitment 42)

Analysis Option:

IP2 will perform an analytical evaluation of the steam generator tube-to-tubesheet welds in order to establish a technical basis for either determining that the tubesheet cladding and welds are not susceptible to PWSCC, or redefining the pressure boundary to exclude the tube-to-tubesheet weld, and therefore the weld will not be required for the reactor coolant pressure boundary function. The redefinition of the reactor coolant pressure boundary will be submitted as part of a license amendment request requiring approval from the NRC. An approved analytical evaluation would obviate the need to develop a plant-specific AMP to verify effectiveness of the Water Chemistry Control – Primary and Secondary program.

Inspection Option:

Perform a one time inspection of a representative number of tube-to-tubesheet welds in each steam generator to determine if PWSCC cracking is present. If weld cracking is identified:

a. The condition will be resolved through repair or engineering evaluation to justify continued service, as appropriate, and

b. An ongoing monitoring program will be established to perform routine tube-to-tubesheet weld inspections for the remaining life of the steam generators.

IP2 replaced its steam generators in 2000. The tube-to-tubesheet welds have been in service approximately eleven years. Considering this limited service time, if Option 1 is not implemented, IP2 will implement Option 2 that includes tube-to-tubesheet weld inspections for PWSCC. These inspections will be performed between March 2020 and March 2024 such that the steam generators will have been in service between 20 and 24 years.

In 2R17 (2006), 166 tubes were inspected to the tube end with a rotating pancake coil (RPC) probe. No degradation was detected.

2. For Unit 3 SGs tube-to-tubesheet welds, justify how your Steam Generator Integrity Program is capable to manage PWSCC in tube-to-tubesheet welds, or provide either a plant-specific AMP that will complement the primary water chemistry program, in order to verify the effectiveness of the primary water chemistry program and ensure that cracking due to PWSCC is not occurring in tube-to-tubesheet welds, or a rationale for why such a program is not needed.

Response for RAI 3.1.2.2.16-1 Part 2

IP3 will address the potential failure of the steam generator reactor coolant pressure boundary due to PWSCC cracking of tube-to-tubesheet welds via one of two options, an analysis or an inspection. (Commitment 42)

Analysis Option:

IP3 will perform an analytical evaluation of the steam generator tube-to-tubesheet welds in order to establish a technical basis for either determining that the tubesheet cladding and welds are not susceptible to PWSCC, or redefining the pressure boundary to exclude the tube-to-tubesheet weld, and therefore the weld will not be required for the reactor coolant pressure boundary function. The redefinition of the reactor coolant pressure boundary will be submitted as part of a license amendment request requiring approval from the NRC. An approved analytical evaluation would obviate the need to develop a plant-specific AMP to verify effectiveness of the Water Chemistry Control – Primary and Secondary program.

Inspection Option:

Perform a one time inspection of a representative number of tube-to-tubesheet welds in each steam generator to determine if PWSCC cracking is present. This one-time inspection would verify the effectiveness of the water chemistry AMP. If weld cracking is identified:

a. The condition will be resolved through repair or engineering evaluation to justify continued service, as appropriate, and

b. An ongoing monitoring program will be established to perform routine tube-to-tubesheet weld inspections for the remaining life of the steam generators.

IP3 replaced its steam generators in 1989. The tube-to-tubesheet welds have been in service approximately twenty two years. If Option 1 is not implemented, IP3 will implement Option 2 that includes tube-to-tubesheet weld inspections for PWSCC. For IP3 these inspections will be performed within the first 2 refueling outages following the period of extended operation.

RAI RCS-3

Background

In LRA Section 4.3.3 and Commitment 33 (as amended by the letter dated January 22, 2008) the applicant discussed the methodology used to determine the locations that required environmentally-assisted fatigue analyses consistent with NUREG/CR-6260, "Application of NUREG/CR-5999 Interim Fatigue Curves to Selected Nuclear Power Plant Components." The staff recognized that, in LRA Tables 4.3-13 and 4.3-14, there are eight plant-specific locations listed based on the six generic components identified in NUREG/CR-6260. The applicant also discussed in LRA Tables 4.3-13 and 4.3-14 that the surge line nozzle in the RCS piping is bounded by the surge line piping to safe end weld at the pressurizer nozzle. LRA Section 4.3.3 and Commitment 33 were amended as follow:

At least 2 years prior to entering the period of extended operation, for the locations identified in LRA Table 4.3-13 (IP2) and LRA Table 4.3-14 (IP3), under the Fatigue Monitoring Program, IP2 and IP3, IPEC will implement one or more of the following:

(1) Consistent with the Fatigue Monitoring Program, Detection of Aging Effects, update the fatigue usage calculations using refined fatigue analyses to determine valid CUFs less than 1.0 when accounting for the effects of reactor water environment. This includes applying the appropriate Fen factors to valid CUFs determined in accordance with one of the following.

For locations in LRA Table 4.3-13 (IP2) and LRA Table 4.3-14 (IP3) with existing fatigue analysis valid for the period of extended operation, use the existing CUF.
More plant-specific limiting locations with a valid CUF may be evaluated. In particular, the pressurizer lower shell will be reviewed to ensure the surge nozzle remains the limiting component.

Representative CUF values from other plants, adjusted to or enveloping the IPEC plant-specific external loads may be used if demonstrated applicable to IPEC.

An analysis using an NRC-approved version of the ASME code or NRC-approved alternative (e.g., NRC-approved code case) may be performed to determine a valid CUF.

Issue

GALL AMP X.M1 states the impact of the reactor coolant environment on a sample of critical components should include the locations identified in NUREG/CR-6260, as a minimum, and that additional locations may be needed. The staff identified two concerns regarding the applicant's environmentally-assisted fatigue analyses. First, item (1) of above LRA section and Commitment 33 indicated that more limiting plant-specific locations may be evaluated. However, it is only one of the *options* that may be taken. Furthermore, the limiting locations *may* be added and the staff is concerned whether the applicant is committed to verify that the plant-specific locations per NUREG/CR-6260 are bounding for the generic NUREG/CR-6260 components. Second, the staff noted that the applicant's plant-specific configuration may contain locations that should be analyzed for the effects of reactor coolant environment, that are more limiting than those identified in NUREG/CR-6260. This may include locations that are limiting or bounding for a particular plant-specific configuration or that have calculated CUF values that are greater when compared to the locations identified in NUREG/CR-6260.

Request

1. Confirm and justify that the plant-specific locations listed in LRA Tables 4.3-13 and 4.3-14 are bounding for the generic NUREG/CR-6260 components.

Response for RAI RCS-3 Part 1

A review of the locations provided in LRA Tables 4.3-13 and 4.3-14 confirmed that they are equivalent to the locations provided in NUREG/CR-6260.

2. Confirm and justify that the locations selected for environmentally-assisted fatigue analyses in LRA Tables 4.3-13 and 4.3-14 consist of the most limiting locations *for the plant* (beyond the generic components identified in the NUREG/CR-6260 guidance). If these locations are not bounding, clarify which locations require an environmentally-assisted fatigue analysis and the actions that will be taken for these additional locations. If the limiting locations identified consist of nickel alloy, state whether the methodology used to perform environmentally-assisted fatigue calculation for nickel alloy is consistent with NUREG/CR-6909. If not, justify the method chosen.

Response for RAI RCS-3 Part 2

Entergy will review design basis ASME Code Class 1 fatigue evaluations to determine whether the NUREG/CR-6260 locations that have been evaluated for the effects of the reactor coolant environment on fatigue usage are the limiting locations for the Indian Point plant configurations. If more limiting locations are identified, the most limiting location will be evaluated for the effects of the reactor coolant environment on fatigue usage.

IPEC will use the NUREG/CR-6909 methodology in the evaluation of the limiting locations consisting of nickel alloy, if any. This evaluation will be completed prior to entering the period of extended operation.

<u>Commitment</u>

Entergy is providing the following new commitment (Commitment 43) for the Metal Fatigue NUREG/CR-6260;

Entergy will review design basis ASME Code Class 1 fatigue evaluations to determine whether the NUREG/CR-6260 locations that have been evaluated for the effects of the reactor coolant environment on fatigue usage are the limiting locations for the Indian Point 2 and 3 plant configurations. If more limiting locations are identified, the most limiting location will be evaluated for the effects of the reactor coolant environment on fatigue usage.

IPEC will use the NUREG/CR-6909 methodology in the evaluation of the limiting locations consisting of nickel alloy, if any. This evaluation will be completed prior to the period of extended operation.

NRC WESTEMS Questions

Question #1

For any use of the WESTEMS "Design CUF" module in the future at IPEC, include written explanation and justification of any user intervention in the process.

Response for Question #1

IPEC will include written explanation and justification of user intervention in any future use of the WESTEMS "Design CUF" module. (Commitment 44)

Question #2

Provide a commitment that the NB-3600 option of the WESTEMS "Design CUF" module will not be implemented or used in the future at IPEC.

Response for Question #2

IPEC will not use the ASME Section III, NB-3600 option of the WESTEMS "Design CUF" module until the issues identified during the NRC review of the program has been resolved. (Commitment 45)

ATTACHMENT 2 TO NL-11-032

LICENSE RENEWAL APPLICATION
IPEC LIST OF REGULATORY COMITMENTS

Rev. 13

ENTERGY NUCLEAR OPERATIONS, INC.
INDIAN POINT NUCLEAR GENERATING UNIT NOS. 2 & 3
DOCKET NOS. 50-247 AND 50-286

List of Regulatory Commitments

Rev. 13

The following table identifies those actions committed to by Entergy in this document.

Changes are shown as strikethroughs for ~~deletions~~ and underlines for additions.

#	COMMITMENT	IMPLEMENTATION SCHEDULE	SOURCE	RELATED LRA SECTION / AUDIT ITEM
1	Enhance the Aboveground Steel Tanks Program for IP2 and IP3 to perform thickness measurements of the bottom surfaces of the condensate storage tanks, city water tank, and fire water tanks once during the first ten years of the period of extended operation. Enhance the Aboveground Steel Tanks Program for IP2 and IP3 to require trending of thickness measurements when material loss is detected.	IP2: September 28, 2013 IP3: December 12, 2015	NL-07-039	A.2.1.1 A.3.1.1 B.1.1
2	Enhance the Bolting Integrity Program for IP2 and IP3 to clarify that actual yield strength is used in selecting materials for low susceptibility to SCC and clarify the prohibition on use of lubricants containing MoS_2 for bolting. The Bolting Integrity Program manages loss of preload and loss of material for all external bolting.	IP2: September 28, 2013 IP3: December 12, 2015	NL-07-039 NL-07-153	A.2.1.2 A.3.1.2 B.1.2 Audit Items 201, 241, 270

#	COMMITMENT	IMPLEMENTATION SCHEDULE	SOURCE	RELATED LRA SECTION / AUDIT ITEM
3	Implement the Buried Piping and Tanks Inspection Program for IP2 and IP3 as described in LRA Section B.1.6. This new program will be implemented consistent with the corresponding program described in NUREG-1801 Section XI.M34, Buried Piping and Tanks Inspection. Include in the Buried Piping and Tanks Inspection Program described in LRA Section B.1.6 a risk assessment of in-scope buried piping and tanks that includes consideration of the impacts of buried piping or tank leakage and of conditions affecting the risk for corrosion. Classify pipe segments and tanks as having a high, medium or low impact of leakage based on the safety class, the hazard posed by fluid contained in the piping and the impact of leakage on reliable plant operation. Determine corrosion risk through consideration of piping or tank material, soil resistivity, drainage, the presence of cathodic protection and the type of coating. Establish inspection priority and frequency for periodic inspections of the in-scope piping and tanks based on the results of the risk assessment. Perform inspections using inspection techniques with demonstrated effectiveness.	IP2: September 28, 2013 IP3: December 12, 2015	NL-07-039 NL-07-153 NL-09-106 NL-09-111	A.2.1.5 A.3.1.5 B.1.6 Audit Item 173

#	COMMITMENT	IMPLEMENTATION SCHEDULE	SOURCE	RELATED LRA SECTION / AUDIT ITEM
4	Enhance the Diesel Fuel Monitoring Program to include cleaning and inspection of the IP2 GT-1 gas turbine fuel oil storage tanks, IP2 and IP3 EDG fuel oil day tanks, IP2 SBO/Appendix R diesel generator fuel oil day tank, and IP3 Appendix R fuel oil storage tank and day tank once every ten years. Enhance the Diesel Fuel Monitoring Program to include quarterly sampling and analysis of the IP2 SBO/Appendix R diesel generator fuel oil day tank, IP2 security diesel fuel oil storage tank, IP2 security diesel fuel oil day tank, and IP3 Appendix R fuel oil storage tank. Particulates, water and sediment checks will be performed on the samples. Filterable solids acceptance criterion will be less than or equal to 10mg/l. Water and sediment acceptance criterion will be less than or equal to 0.05%. Enhance the Diesel Fuel Monitoring Program to include thickness measurement of the bottom of the following tanks once every ten years. IP2: EDG fuel oil storage tanks, EDG fuel oil day tanks, SBO/Appendix R diesel generator fuel oil day tank, GT-1 gas turbine fuel oil storage tanks, and diesel fire pump fuel oil storage tank; IP3: EDG fuel oil day tanks, EDG fuel oil storage tanks, Appendix R fuel oil storage tank, and diesel fire pump fuel oil storage tank. Enhance the Diesel Fuel Monitoring Program to change the analysis for water and particulates to a quarterly frequency for the following tanks. IP2: GT-1 gas turbine fuel oil storage tanks and diesel fire pump fuel oil storage tank; IP3: Appendix R fuel oil day tank and diesel fire pump fuel oil storage tank. Enhance the Diesel Fuel Monitoring Program to specify acceptance criteria for thickness measurements of the fuel oil storage tanks within the scope of the program. Enhance the Diesel Fuel Monitoring Program to direct samples be taken and include direction to remove water when detected. Revise applicable procedures to direct sampling of the onsite portable fuel oil contents prior to transferring the contents to the storage tanks. Enhance the Diesel Fuel Monitoring Program to direct the addition of chemicals including biocide when the presence of biological activity is confirmed.	IP2: September 28, 2013 IP3: December 12, 2015	NL-07-039 NL-07-153 NL-08-057	A.2.1.8 A.3.1.8 B.1.9 Audit items 128, 129, 132, 491, 492, 510

#	COMMITMENT	IMPLEMENTATION SCHEDULE	SOURCE	RELATED LRA SECTION / AUDIT ITEM
5	Enhance the External Surfaces Monitoring Program for IP2 and IP3 to include periodic inspections of systems in scope and subject to aging management review for license renewal in accordance with 10 CFR 54.4(a)(1) and (a)(3). Inspections shall include areas surrounding the subject systems to identify hazards to those systems. Inspections of nearby systems that could impact the subject systems will include SSCs that are in scope and subject to aging management review for license renewal in accordance with 10 CFR 54.4(a)(2).	IP2: September 28, 2013 IP3: December 12, 2015	NL-07-039	A.2.1.10 A.3.1.10 B.1.11
6	Enhance the Fatigue Monitoring Program for IP2 to monitor steady state cycles and feedwater cycles or perform an evaluation to determine monitoring is not required. Review the number of allowed events and resolve discrepancies between reference documents and monitoring procedures. Enhance the Fatigue Monitoring Program for IP3 to include all the transients identified. Assure all fatigue analysis transients are included with the lowest limiting numbers. Update the number of design transients accumulated to date.	IP2: September 28, 2013 IP3: December 12, 2015	NL-07-039 NL-07-153	A.2.1.11 A.3.1.11 B.1.12, Audit Item 164
7	Enhance the Fire Protection Program to inspect external surfaces of the IP3 RCP oil collection systems for loss of material each refueling cycle. Enhance the Fire Protection Program to explicitly state that the IP2 and IP3 diesel fire pump engine sub-systems (including the fuel supply line) shall be observed while the pump is running. Acceptance criteria will be revised to verify that the diesel engine does not exhibit signs of degradation while running; such as fuel oil, lube oil, coolant, or exhaust gas leakage. Enhance the Fire Protection Program to specify that the IP2 and IP3 diesel fire pump engine carbon steel exhaust components are inspected for evidence of corrosion and cracking at least once each operating cycle. Enhance the Fire Protection Program for IP3 to visually inspect the cable spreading room, 480V switchgear room, and EDG room CO_2 fire suppression system for signs of degradation, such as corrosion and mechanical damage at least once every six months.	IP2: September 28, 2013 IP3: December 12, 2015	NL-07-039	A.2.1.12 A.3.1.12 B.1.13

#	COMMITMENT	IMPLEMENTATION SCHEDULE	SOURCE	RELATED LRA SECTION / AUDIT ITEM
8	Enhance the Fire Water Program to include inspection of IP2 and IP3 hose reels for evidence of corrosion. Acceptance criteria will be revised to verify no unacceptable signs of degradation. Enhance the Fire Water Program to replace all or test a sample of IP2 and IP3 sprinkler heads required for 10 CFR 50.48 using guidance of NFPA 25 (2002 edition), Section 5.3.1.1.1 before the end of the 50-year sprinkler head service life and at 10-year intervals thereafter during the extended period of operation to ensure that signs of degradation, such as corrosion, are detected in a timely manner. Enhance the Fire Water Program to perform wall thickness evaluations of IP2 and IP3 fire protection piping on system components using non-intrusive techniques (e.g., volumetric testing) to identify evidence of loss of material due to corrosion. These inspections will be performed before the end of the current operating term and at intervals thereafter during the period of extended operation. Results of the initial evaluations will be used to determine the appropriate inspection interval to ensure aging effects are identified prior to loss of intended function. Enhance the Fire Water Program to inspect the internal surface of foam based fire suppression tanks. Acceptance criteria will be enhanced to verify no significant corrosion.	IP2: September 28, 2013 IP3: December 12, 2015	NL-07-039 NL-07-153 NL-08-014	A.2.1.13 A.3.1.13 B.1.14 Audit Items 105, 106

#	COMMITMENT	IMPLEMENTATION SCHEDULE	SOURCE	RELATED LRA SECTION / AUDIT ITEM
9	Enhance the Flux Thimble Tube Inspection Program for IP2 and IP3 to implement comparisons to wear rates identified in WCAP-12866. Include provisions to compare data to the previous performances and perform evaluations regarding change to test frequency and scope. Enhance the Flux Thimble Tube Inspection Program for IP2 and IP3 to specify the acceptance criteria as outlined in WCAP-12866 or other plant-specific values based on evaluation of previous test results. Enhance the Flux Thimble Tube Inspection Program for IP2 and IP3 to direct evaluation and performance of corrective actions based on tubes that exceed or are projected to exceed the acceptance criteria. Also stipulate that flux thimble tubes that cannot be inspected over the tube length and cannot be shown by analysis to be satisfactory for continued service, must be removed from service to ensure the integrity of the reactor coolant system pressure boundary.	IP2: September 28, 2013 IP3: December 12, 2015	NL-07-039	A.2.1.15 A.3.1.15 B.1.16

#	COMMITMENT	IMPLEMENTATION SCHEDULE	SOURCE	RELATED LRA SECTION / AUDIT ITEM
10	Enhance the Heat Exchanger Monitoring Program for IP2 and IP3 to include the following heat exchangers in the scope of the program. • Safety injection pump lube oil heat exchangers • RHR heat exchangers • RHR pump seal coolers • Non-regenerative heat exchangers • Charging pump seal water heat exchangers • Charging pump fluid drive coolers • Charging pump crankcase oil coolers • Spent fuel pit heat exchangers • Secondary system steam generator sample coolers • Waste gas compressor heat exchangers • SBO/Appendix R diesel jacket water heat exchanger (IP2 only) Enhance the Heat Exchanger Monitoring Program for IP2 and IP3 to perform visual inspection on heat exchangers where non-destructive examination, such as eddy current inspection, is not possible due to heat exchanger design limitations. Enhance the Heat Exchanger Monitoring Program for IP2 and IP3 to include consideration of material-environment combinations when determining sample population of heat exchangers. Enhance the Heat Exchanger Monitoring Program for IP2 and IP3 to establish minimum tube wall thickness for the new heat exchangers identified in the scope of the program. Establish acceptance criteria for heat exchangers visually inspected to include no indication of tube erosion, vibration wear, corrosion, pitting, fouling, or scaling.	IP2: September 28, 2013 IP3: December 12, 2015	NL-07-039 NL-07-153 NL-09-018	A.2.1.16 A.3.1.16 B.1.17, Audit Item 52
11	Delete commitment.		NL-09-056	

#	COMMITMENT	IMPLEMENTATION SCHEDULE	SOURCE	RELATED LRA SECTION / AUDIT ITEM
12	Enhance the Masonry Wall Program for IP2 and IP3 to specify that the IP1 intake structure is included in the program.	IP2: September 28, 2013 IP3: December 12, 2015	NL-07-039	A.2.1.18 A.3.1.18 B.1.19
13	Enhance the Metal-Enclosed Bus Inspection Program to add IP2 480V bus associated with substation A to the scope of bus inspected. Enhance the Metal-Enclosed Bus Inspection Program for IP2 and IP3 to visually inspect the external surface of MEB enclosure assemblies for loss of material at least once every 10 years. The first inspection will occur prior to the period of extended operation and the acceptance criterion will be no significant loss of material. Enhance the Metal-Enclosed Bus Inspection Program to add acceptance criteria for MEB internal visual inspections to include the absence of indications of dust accumulation on the bus bar, on the insulators, and in the duct, in addition to the absence of indications of moisture intrusion into the duct. Enhance the Metal-Enclosed Bus Inspection Program for IP2 and IP3 to inspect bolted connections at least once every five years if performed visually or at least once every ten years using quantitative measurements such as thermography or contact resistance measurements. The first inspection will occur prior to the period of extended operation. The plant will process a change to applicable site procedure to remove the reference to "re-torquing" connections for phase bus maintenance and bolted connection maintenance.	IP2: September 28, 2013 IP3: December 12, 2015	NL-07-039 NL-07-153 NL-08-057	A.2.1.19 A.3.1.19 B.1.20 Audit Items 124, 133, 519
14	Implement the Non-EQ Bolted Cable Connections Program for IP2 and IP3 as described in LRA Section B.1.22.	IP2: September 28, 2013 IP3: December 12, 2015	NL-07-039	A.2.1.21 A.3.1.21 B.1.22

#	COMMITMENT	IMPLEMENTATION SCHEDULE	SOURCE	RELATED LRA SECTION / AUDIT ITEM
15	Implement the Non-EQ Inaccessible Medium-Voltage Cable Program for IP2 and IP3 as described in LRA Section B.1.23. This new program will be implemented consistent with the corresponding program described in NUREG-1801 Section XI.E3, Inaccessible Medium-Voltage Cables Not Subject To 10 CFR 50.49 Environmental Qualification Requirements.	IP2: September 28, 2013 IP3: December 12, 2015	NL-07-039 NL-07-153	A.2.1.22 A.3.1.22 B.1.23 Audit item 173
16	Implement the Non-EQ Instrumentation Circuits Test Review Program for IP2 and IP3 as described in LRA Section B.1.24. This new program will be implemented consistent with the corresponding program described in NUREG-1801 Section XI.E2, Electrical Cables and Connections Not Subject to 10 CFR 50.49 Environmental Qualification Requirements Used in Instrumentation Circuits.	IP2: September 28, 2013 IP3: December 12, 2015	NL-07-039 NL-07-153	A.2.1.23 A.3.1.23 B.1.24 Audit item 173
17	Implement the Non-EQ Insulated Cables and Connections Program for IP2 and IP3 as described in LRA Section B.1.25. This new program will be implemented consistent with the corresponding program described in NUREG-1801 Section XI.E1, Electrical Cables and Connections Not Subject to 10 CFR 50.49 Environmental Qualification Requirements.	IP2: September 28, 2013 IP3: December 12, 2015	NL-07-039 NL-07-153	A.2.1.24 A.3.1.24 B.1.25 Audit item 173
18	Enhance the Oil Analysis Program for IP2 to sample and analyze lubricating oil used in the SBO/Appendix R diesel generator consistent with oil analysis for other site diesel generators. Enhance the Oil Analysis Program for IP2 and IP3 to sample and analyze generator seal oil and turbine hydraulic control oil. Enhance the Oil Analysis Program for IP2 and IP3 to formalize preliminary oil screening for water and particulates and laboratory analyses including defined acceptance criteria for all components included in the scope of this program. The program will specify corrective actions in the event acceptance criteria are not met. Enhance the Oil Analysis Program for IP2 and IP3 to formalize trending of preliminary oil screening results as well as data provided from independent laboratories.	IP2: September 28, 2013 IP3: December 12, 2015	NL-07-039	A.2.1.25 A.3.1.25 B.1.26

#	COMMITMENT	IMPLEMENTATION SCHEDULE	SOURCE	RELATED LRA SECTION / AUDIT ITEM
19	Implement the One-Time Inspection Program for IP2 and IP3 as described in LRA Section B.1.27. This new program will be implemented consistent with the corresponding program described in NUREG-1801, Section XI.M32, One-Time Inspection.	IP2: September 28, 2013 IP3: December 12, 2015	NL-07-039 NL-07-153	A.2.1.26 A.3.1.26 B.1.27 Audit item 173
20	Implement the One-Time Inspection – Small Bore Piping Program for IP2 and IP3 as described in LRA Section B.1.28. This new program will be implemented consistent with the corresponding program described in NUREG-1801, Section XI.M35, One-Time Inspection of ASME Code Class I Small-Bore Piping.	IP2: September 28, 2013 IP3: December 12, 2015	NL-07-039 NL-07-153	A.2.1.27 A.3.1.27 B.1.28 Audit item 173
21	Enhance the Periodic Surveillance and Preventive Maintenance Program for IP2 and IP3 as necessary to assure that the effects of aging will be managed such that applicable components will continue to perform their intended functions consistent with the current licensing basis through the period of extended operation.	IP2: September 28, 2013 IP3: December 12, 2015	NL-07-039	A.2.1.28 A.3.1.28 B.1.29
22	Enhance the Reactor Vessel Surveillance Program for IP2 and IP3 revising the specimen capsule withdrawal schedules to draw and test a standby capsule to cover the peak reactor vessel fluence expected through the end of the period of extended operation. Enhance the Reactor Vessel Surveillance Program for IP2 and IP3 to require that tested and untested specimens from all capsules pulled from the reactor vessel are maintained in storage.	IP2: September 28, 2013 IP3: December 12, 2015	NL-07-039	A.2.1.31 A.3.1.31 B.1.32
23	Implement the Selective Leaching Program for IP2 and IP3 as described in LRA Section B.1.33. This new program will be implemented consistent with the corresponding program described in NUREG-1801, Section XI.M33 Selective Leaching of Materials.	IP2: September 28, 2013 IP3: December 12, 2015	NL-07-039 NL-07-153	A.2.1.32 A.3.1.32 B.1.33 Audit item 173
24	Enhance the Steam Generator Integrity Program for IP2 and IP3 to require that the results of the condition monitoring assessment are compared to the operational assessment performed for the prior operating cycle with differences evaluated.	IP2: September 28, 2013 IP3: December 12, 2015	NL-07-039	A.2.1.34 A.3.1.34 B.1.35

#	COMMITMENT	IMPLEMENTATION SCHEDULE	SOURCE	RELATED LRA SECTION / AUDIT ITEM
25	Enhance the Structures Monitoring Program to explicitly specify that the following structures are included in the program. • Appendix R diesel generator foundation (IP3) • Appendix R diesel generator fuel oil tank vault (IP3) • Appendix R diesel generator switchgear and enclosure (IP3) • city water storage tank foundation • condensate storage tanks foundation (IP3) • containment access facility and annex (IP3) • discharge canal (IP2/3) • emergency lighting poles and foundations (IP2/3) • fire pumphouse (IP2) • fire protection pumphouse (IP3) • fire water storage tank foundations (IP2/3) • gas turbine 1 fuel storage tank foundation • maintenance and outage building-elevated passageway (IP2) • new station security building (IP2) • nuclear service building (IP1) • primary water storage tank foundation (IP3) • refueling water storage tank foundation (IP3) • security access and office building (IP3) • service water pipe chase (IP2/3) • service water valve pit (IP3) • superheater stack • transformer/switchyard support structures (IP2) • waste holdup tank pits (IP2/3) Enhance the Structures Monitoring Program for IP2 and IP3 to clarify that in addition to structural steel and concrete, the following commodities (including their anchorages) are inspected for each structure as applicable. • cable trays and supports • concrete portion of reactor vessel supports • conduits and supports • cranes, rails and girders • equipment pads and foundations • fire proofing (pyrocrete) • HVAC duct supports • jib cranes • manholes and duct banks • manways, hatches and hatch covers • monorails	IP2: September 28, 2013 IP3: December 12, 2015	NL-07-039 NL-07-153 NL-08-057	A.2.1.35 A.3.1.35 B.1.36 Audit items 86, 87, 88, 417

#	COMMITMENT	IMPLEMENTATION SCHEDULE	SOURCE	RELATED LRA SECTION / AUDIT ITEM
	• new fuel storage racks • sumps, sump screens, strainers and flow barriers Enhance the Structures Monitoring Program for IP2 and IP3 to inspect inaccessible concrete areas that are exposed by excavation for any reason. IP2 and IP3 will also inspect inaccessible concrete areas in environments where observed conditions in accessible areas exposed to the same environment indicate that significant concrete degradation is occurring.			
	Enhance the Structures Monitoring Program for IP2 and IP3 to perform inspections of elastomers (seals, gaskets, seismic joint filler, and roof elastomers) to identify cracking and change in material properties and for inspection of aluminum vents and louvers to identify loss of material.			
	Enhance the Structures Monitoring Program for IP2 and IP3 to perform an engineering evaluation of groundwater samples to assess aggressiveness of groundwater to concrete on a periodic basis (at least once every five years). IPEC will obtain samples from at least 5 wells that are representative of the ground water surrounding below-grade site structures and perform an engineering evaluation of the results from those samples for sulfates, pH and chlorides. Additionally, to assess potential indications of spent fuel pool leakage, IPEC will sample for tritium in groundwater wells in close proximity to the IP2 spent fuel pool at least once every 3 months.		NL-08-127	Audit Item 360
	Enhance the Structures Monitoring Program for IP2 and IP3 to perform inspection of normally submerged concrete portions of the intake structures at least once every 5 years. Inspect the baffling/grating partition and support platform of the IP3 intake structure at least once every 5 years.			
	Enhance the Structures Monitoring Program for IP2 and IP3 to perform inspection of the degraded areas of the water control structure once per 3 years rather than the normal frequency of once per 5 years during the PEO.			Audit Item 358

#	COMMITMENT	IMPLEMENTATION SCHEDULE	SOURCE	RELATED LRA SECTION / AUDIT ITEM
	Enhance the Structures Monitoring Program to include more detailed quantitative acceptance criteria for inspections of concrete structures in accordance with ACI 349.3R, "Evaluation of Existing Nuclear Safety-Related Concrete Structures" prior to the period of extended operation.		NL-11-032	
26	Implement the Thermal Aging Embrittlement of Cast Austenitic Stainless Steel (CASS) Program for IP2 and IP3 as described in LRA Section B.1.37. This new program will be implemented consistent with the corresponding program described in NUREG-1801, Section XI.M12, Thermal Aging Embrittlement of Cast Austenitic Stainless Steel (CASS) Program.	IP2: September 28, 2013 IP3: December 12, 2015	NL-07-039 NL-07-153	A.2.1.36 A.3.1.36 B.1.37 Audit item 173
27	Implement the Thermal Aging and Neutron Irradiation Embrittlement of Cast Austenitic Stainless Steel (CASS) Program for IP2 and IP3 as described in LRA Section B.1.38. This new program will be implemented consistent with the corresponding program described in NUREG-1801 Section XI.M13, Thermal Aging and Neutron Embrittlement of Cast Austenitic Stainless Steel (CASS) Program.	IP2: September 28, 2013 IP3: December 12, 2015	NL-07-039 NL-07-153	A.2.1.37 A.3.1.37 B.1.38 Audit item 173
28	Enhance the Water Chemistry Control – Closed Cooling Water Program to maintain water chemistry of the IP2 SBO/Appendix R diesel generator cooling system per EPRI guidelines. Enhance the Water Chemistry Control – Closed Cooling Water Program to maintain the IP2 and IP3 security generator and fire protection diesel cooling water pH and glycol within limits specified by EPRI guidelines.	IP2: September 28, 2013 IP3: December 12, 2015	NL-07-039 NL-08-057	A.2.1.39 A.3.1.39 B.1.40 Audit item 509
29	Enhance the Water Chemistry Control – Primary and Secondary Program for IP2 to test sulfates monthly in the RWST with a limit of <150 ppb.	IP2: September 28, 2013	NL-07-039	A.2.1.40 B.1.41
30	For aging management of the reactor vessel internals, IPEC will (1) participate in the industry programs for investigating and managing aging effects on reactor internals; (2) evaluate and implement the results of the industry programs as applicable to the reactor internals; and (3) upon completion of these programs, but not less than 24 months before entering the period of extended operation, submit an inspection plan for reactor internals to the NRC for review and approval.	IP2: September 28, 2011 IP3: December 12, 2013	NL-07-039	A.2.1.41 A.3.1.41

#	COMMITMENT	IMPLEMENTATION SCHEDULE	SOURCE	RELATED LRA SECTION / AUDIT ITEM
31	Additional P-T curves will be submitted as required per 10 CFR 50, Appendix G prior to the period of extended operation as part of the Reactor Vessel Surveillance Program.	IP2: September 28, 2013 IP3: December 12, 2015	NL-07-039	A.2.2.1.2 A.3.2.1.2 4.2.3
32	As required by 10 CFR 50.61(b)(4), IP3 will submit a plant-specific safety analysis for plate B2803-3 to the NRC three years prior to reaching the RT_{PTS} screening criterion. Alternatively, the site may choose to implement the revised PTS rule when approved.	IP3: December 12, 2015	NL-07-039 NL-08-127	A.3.2.1.4 4.2.5
33	At least 2 years prior to entering the period of extended operation, for the locations identified in LRA Table 4.3-13 (IP2) and LRA Table 4.3-14 (IP3), under the Fatigue Monitoring Program, IP2 and IP3 will implement one or more of the following: (1) Consistent with the Fatigue Monitoring Program, Detection of Aging Effects, update the fatigue usage calculations using refined fatigue analyses to determine valid CUFs less than 1.0 when accounting for the effects of reactor water environment. This includes applying the appropriate Fen factors to valid CUFs determined in accordance with one of the following: 1. For locations in LRA Table 4.3-13 (IP2) and LRA Table 4.3-14 (IP3), with existing fatigue analysis valid for the period of extended operation, use the existing CUF. 2. Additional plant-specific locations with a valid CUF may be evaluated. In particular, the pressurizer lower shell will be reviewed to ensure the surge nozzle remains the limiting component. 3. Representative CUF values from other plants, adjusted to or enveloping the IPEC plant specific external loads may be used if demonstrated applicable to IPEC. 4. An analysis using an NRC-approved version of the ASME code or NRC-approved alternative (e.g., NRC-approved code case) may be performed to determine a valid CUF. (2) Consistent with the Fatigue Monitoring Program, Corrective Actions, repair or replace the affected locations before exceeding a CUF of 1.0.	IP2: September 28, 2011 IP3: December 12, 2013 Complete	NL-07-039 NL-07-153 NL-08-021 NL-10-082	A.2.2.2.3 A.3.2.2.3 4.3.3 Audit item 146

#	COMMITMENT	IMPLEMENTATION SCHEDULE	SOURCE	RELATED LRA SECTION / AUDIT ITEM
34	IP2 SBO / Appendix R diesel generator will be installed and operational by April 30, 2008. This committed change to the facility meets the requirements of 10 CFR 50.59l(1) and, therefore, a license amendment pursuant to 10 CFR 50.90 is not required.	April 30, 2008 Complete	NL-07-078 NL-08-074	2.1.1.3.5
35	Perform a one-time inspection of representative sample area of IP2 containment liner affected by the 1973 event behind the insulation, prior to entering the extended period of operation, to assure liner degradation is not occurring in this area. Perform a one-time inspection of representative sample area of the IP3 containment steel liner at the juncture with the concrete floor slab, prior to entering the extended period of operation, to assure liner degradation is not occurring in this area. Any degradation will be evaluated for updating of the containment liner analyses as needed.	IP2: September 28, 2013 IP3: December 12, 2015	NL-08-127 NL-09-018	Audit Item 27
36	Perform a one-time Inspection and evaluation of a sample of potentially affected IP2 refueling cavity concrete prior to the period of extended operation. The sample will be obtained by core boring the refueling cavity wall in an area that is susceptible to exposure to borated water leakage. The inspection will include an assessment of embedded reinforcing steel. Additional core bore samples will be taken, if the leakage is not stopped, prior to the end of the first ten years of the period of extended operation. A sample of leakage fluid will be analyzed to determine the composition of the fluid. If additional core samples are taken prior to the end of the first ten years of the period of extended operation, a sample of leakage fluid will be analyzed.	IP2: September 28, 2013	NL-08-127 NL-09-056 NL-09-079	Audit Item 359
37	Enhance the Containment Inservice Inspection (CII-IWL) Program to include inspections of the containment using enhanced characterization of degradation (i.e., quantifying the dimensions of noted indications through the use of optical aids) during the period of extended operation. The enhancement includes obtaining critical dimensional data of degradation where possible through direct measurement or the use of scaling technologies for photographs, and the use of consistent vantage points for visual inspections.	IP2: September 28, 2013 IP3: December 12, 2015	NL-08-127	Audit Item 361

#	COMMITMENT	IMPLEMENTATION SCHEDULE	SOURCE	RELATED LRA SECTION / AUDIT ITEM
38	For Reactor Vessel Fluence, should future core loading patterns invalidate the basis for the projected values of RTpts or C_VUSE, updated calculations will be provided to the NRC.	IP2: September 28, 2013 IP3: December 12, 2015	NL-08-143	4.2.1
39	Deleted		NL-09-079	
40	Evaluate plant specific and appropriate industry operating experience and incorporate lessons learned in establishing appropriate monitoring and inspection frequencies to assess aging effects for the new aging management programs. Documentation of the operating experience evaluated for each new program will be available on site for NRC review prior to the period of extended operation.	IP2: September 28, 2013 IP3: December 12, 2015	NL-09-106	B.1.6 B.1.22 B.1.23 B.1.24 B.1.25 B.1.27 B.1.28 B.1.33 B.1.37 B.1.38
41	IPEC will inspect steam generators for both units to assess the condition of the divider plate assembly. The examination technique used will be capable of detecting PWSCC in the steam generator divider plate assembly welds. The steam generator divider plate inspections will be completed within the first ten years of the period of extended operation (PEO).	IP2: Prior to September 28, 2023 IP3: Prior to December 12, 2025	NL-11-032	N/A

#	COMMITMENT	IMPLEMENTATION SCHEDULE	SOURCE	RELATED LRA SECTION / AUDIT ITEM
42	IPEC will develop a plan for each unit to address the potential for cracking of the primary to secondary pressure boundary due to PWSCC of tube-to-tubesheet welds using one of the following two options. Option 1 (Analysis) IPEC will perform an analytical evaluation of the steam generator tube-to-tubesheet welds in order to establish a technical basis for either determining that the tubesheet cladding and welds are not susceptible to PWSCC, or redefining the pressure boundary in which the tube-to-tubesheet weld is no longer included and, therefore, is not required for reactor coolant pressure boundary function. The redefinition of the reactor coolant pressure boundary will be submitted as part of a license amendment request requiring approval from the NRC. Option 2 (Inspection) IPEC will perform a one-time inspection of a representative number of tube-to-tubesheet welds in each steam generator to determine if PWSCC cracking is present. If weld cracking is identified: a. The condition will be resolved through repair or engineering evaluation to justify continued service, as appropriate, and b. An ongoing monitoring program will be established to perform routine tube-to-tubesheet weld inspections for the remaining life of the steam generators.	IP2: Prior to March 2024 IP3: Within the first 2 refueling outages following the beginning of the PEO.	NL-11-032	N/A
43	IPEC will review design basis ASME Code Class 1 fatigue evaluations to determine whether the NUREG/CR-6260 locations that have been evaluated for the effects of the reactor coolant environment on fatigue usage are the limiting locations for the IP2 and IP3 configurations. If more limiting locations are identified, the most limiting location will be evaluated for the effects of the reactor coolant environment on fatigue usage. IPEC will use the NUREG/CR-6909 methodology in the evaluation of the limiting locations consisting of nickel alloy, if any.	IP2: Prior to September 28, 2013 IP3: Prior to December 12, 2015	NL-11-032	4.3.3

#	COMMITMENT	IMPLEMENTATION SCHEDULE	SOURCE	RELATED LRA SECTION / AUDIT ITEM
44	IPEC will include written explanation and justification of any user intervention in future evaluations using the WESTEMS "Design CUF" module.	Within 60 days of issuance of the renewed operating license.	NL-11-032	N/A
45	IPEC will not use the NB-3600 option of the WESTEMS program in future design calculations until the issues identified during the NRC review of the program have been resolved.	Within 60 days of issuance of the renewed operating license.	NL-11-032	N/A
46	Include in the IP2 ISI Program volumetric weld metal inspections of ten socket welds in 2012 and of at least ten socket welds during each 10-year period of the period of extended operation.	IP2: Prior to September 28, 2013	NL-11-032	N/A

Entergy New Contention NYS-38/RK-TC-5
Attachment 2

AUDIT REPORT

Audit of NRC's Management of Licensee Commitments

OIG-A-17 September 19, 2011

All publicly available OIG reports are accessible through
NRC's Web site at:
http:/www.nrc.gov/reading-rm/doc-collections/insp-gen/

UNITED STATES
NUCLEAR REGULATORY COMMISSION
WASHINGTON, D.C. 20555-0001

OFFICE OF THE
INSPECTOR GENERAL

September 19, 2011

MEMORANDUM TO: R. William Borchardt
Executive Director for Operations

FROM: Stephen D. Dingbaum **/RA/**
Assistant Inspector General for Audits

SUBJECT: AUDIT OF NRC'S MANAGEMENT OF LICENSEE COMMITMENTS (OIG-11-A-17)

Attached is the Office of the Inspector General's (OIG) audit report titled, *Audit of NRC's Management of Licensee Commitments.*

The report presents the results of the subject audit. Agency comments provided at a meeting with NRC management officials and staff on August 12, 2011, and an August 23, 2011, exit conference have been incorporated, as appropriate, into this report.

Please provide information on actions taken or planned on each of the recommendations within 30 days of the date of this memorandum. Actions taken or planned are subject to OIG follow up as stated in Management Directive 6.1.

We appreciate the cooperation extended to us by members of your staff during the audit. If you have any questions or comments about our report, please contact me at 415-5915 or RK Wild, Team Leader, Nuclear Reactor Safety Team, at 415-5948.

Attachment: As stated

Electronic Distribution

Edwin M. Hackett, Executive Director, Advisory Committee
on Reactor Safeguards
E. Roy Hawkens, Chief Administrative Judge, Atomic Safety
and Licensing Board Panel
Stephen G. Burns, General Counsel
Brooke D. Poole, Director, Office of Commission Appellate Adjudication
James E. Dyer, Chief Financial Officer
Margaret M. Doane, Director, Office of International Programs
Rebecca L. Schmidt, Director, Office of Congressional Affairs
Eliot B. Brenner, Director, Office of Public Affairs
Annette Vietti-Cook, Secretary of the Commission
R. William Borchardt, Executive Director for Operations
Michael F. Weber, Deputy Executive Director for Materials, Waste,
Research, State, Tribal, and Compliance Programs, OEDO
Darren B. Ash, Deputy Executive Director
for Corporate Management, OEDO
Martin J. Virgilio, Deputy Executive Director for Reactor
and Preparedness Programs, OEDO
Nader Mamish, Assistant for Operations, OEDO
Kathryn O. Greene, Director, Office of Administration
Patrick D. Howard, Director, Computer Security Office
Roy P. Zimmerman, Director, Office of Enforcement
Cynthia Carpenter, Acting Director, Office of Federal and State Materials
and Environmental Management Programs
Cheryl L. McCrary, Director, Office of Investigations
Thomas M. Boyce, Director, Office of Information Services
Miriam L. Cohen, Director, Office of Human Resources
Michael R. Johnson, Director, Office of New Reactors
Catherine Haney, Director, Office of Nuclear Material Safety
and Safeguards
Eric J. Leeds, Director, Office of Nuclear Reactor Regulation
Brian W. Sheron, Director, Office of Nuclear Regulatory Research
Corenthis B. Kelley, Director, Office of Small Business and Civil Rights
James T. Wiggins, Director, Office of Nuclear Security
and Incident Response
William M. Dean, Regional Administrator, Region I
Victor M. McCree, Regional Administrator, Region II
Mark A. Satorius, Regional Administrator, Region III
Elmo E. Collins, Jr., Regional Administrator, Region IV

EXECUTIVE SUMMARY

BACKGROUND

The U.S. Nuclear Regulatory Commission (NRC) regulates commercial nuclear power plants that generate electricity through a combination of regulatory requirements and licensing, inspection, and enforcement activities. One way NRC provides oversight of licensees is through the management of regulatory commitments (commitments).

Commitments are docketed, written statements describing a specific action that the licensee has agreed or volunteered to take. They often result from a licensing action such as a license amendment, including power uprates, or from a generic communication, such as generic letters and bulletins. Commitments are neither legally binding nor obligations of a license; however, a commitment may be escalated into a legally binding obligation only if NRC staff deems that the commitment is essential for ensuring public health and safety.

Licensees are responsible for creating, tracking, and handling all commitments made to NRC. The licensee is entirely responsible for tracking the commitments, and this includes any changes to the commitments and notification to NRC about such changes. NRC expects licensees to honor commitments in good faith.

PURPOSE

The audit objective was to assess the extent to which NRC appropriately and consistently utilizes and manages regulatory commitments for power reactor licensees.

RESULTS IN BRIEF

Part of NRC's mission is to identify and accomplish those actions that provide the level of nuclear plant performance necessary to ensure adequate protection of public health and safety. A commitment is one tool that NRC uses in the overall licensing process to add flexibility, improve efficiency, and maintain the flow of information between the staff and

licensees. OIG identified opportunities for improvement in the following three areas:

- Consistent implementation of commitment management audits.
    - NRC inconsistently implements the audits of licensee commitment management programs. This is because agency guidance concerning its performance of required triennial audits is incomplete and imprecise. Incomplete and imprecise guidance concerning the conduct of commitment management audits can result in ineffective audits, inefficient use of resources, and the appearance that NRC provides disparate oversight of similarly situated licensees.
- Staff understanding of the definition and use of commitments.
    - The definition and use of commitments is not consistently understood throughout the agency. This occurs because NRC training on commitments is insufficient. Specifically, training does not effectively address the definition and use of commitments and is not provided to all agency staff involved in reviewing licensee commitments. This could potentially result in the misapplication of commitments by NRC staff.
- NRC tracking of commitments.
    - NRC does not systematically track commitments because the agency does not have an adequate tool for tracking them, in part, because the agency has not identified a need for such a tool. Consequently, NRC cannot completely ensure oversight of commitments, which has implications for the agency's continuing awareness of significant commitments, the effectiveness of the triennial commitment management audits, and institutional knowledge management.

RECOMMENDATIONS

This report makes five recommendations to improve the agency's management of licensee commitments. A consolidated list of these recommendations appears in Section V of this report.

AGENCY COMMENTS

On August 9, 2011, the Office of the Inspector General (OIG) issued the discussion draft of this report to the Executive Director for Operations. OIG met with NRC management officials and staff on August 12, 2011, at which time the agency provided informal comments to the draft report. OIG subsequently met with agency management and staff during an August 23, 2011, exit conference to discuss agency informal comments that OIG incorporated into the draft report as appropriate. At this meeting, agency management provided supplemental information that has also been incorporated into this report as appropriate. NRC management and staff reviewed the revised draft report and generally agreed with the recommendations in this report. Furthermore, the agency opted not to provide formal comments for inclusion in this report.

ABBREVIATIONS AND ACRONYMS

ADAMS	Agencywide Documents Access and Management System
CFR	Code of Federal Regulations
DORL	Division of Operating Reactor Licensing
FSAR	Final Safety Analysis Report
MD	Management Directive
NEI	Nuclear Energy Institute
NRC	Nuclear Regulatory Commission
NRR	Office of Nuclear Reactor Regulation
OGC	Office of the General Counsel
OIG	Office of the Inspector General
UFSAR	Updated Final Safety Analysis Report

TABLE OF CONTENTS

I. BACKGROUND

The U.S. Nuclear Regulatory Commission (NRC) regulates commercial nuclear power plants that generate electricity through a combination of regulatory requirements and licensing, inspection, and enforcement activities. One way NRC provides oversight of licensees is through the management of regulatory commitments (commitments), which are non-legally binding actions that the licensee agrees or volunteers to take. Licensees are responsible for creating, tracking, and handling all commitments made to NRC. Within NRC, the primary responsibility for managing commitments lies with Division of Operating Reactor Licensing (DORL) project managers in the Office of Nuclear Reactor Regulation (NRR). However, other NRC staff—such as DORL branch chiefs, NRR technical reviewers, and Office of the General Counsel (OGC) staff—are involved in decisionmaking processes that use commitments.

Guidance on Commitments

Although the term "regulatory commitment" is not defined in NRC's regulations, commitments are used in the context of interactions between NRC and licensees for commercial nuclear reactors. The license renewal rule—Title 10, Code of Federal Regulations, Section 54.3 (10 CFR § 54.3)—references commitments in the definition of a "current licensing basis."[1] In February 2000, NRC endorsed Nuclear Energy Institute (NEI)[2] guidance document NEI-99-04, *Guidelines for Managing NRC Commitment Changes,* which the agency found to be an acceptable method for licensees to follow for managing and changing their commitments to NRC. In 2003, NRR released office instruction LIC-105, *Managing Regulatory Commitments Made by Licensees to NRC*,[3] to provide common references for handling commitments.

[1] Per 10 CFR § 54.3 "Definitions," the *current licensing basis* is the set of NRC requirements applicable to a specific plant and a licensee's written commitments for ensuring compliance with and operation within applicable NRC requirements and the plant-specific design basis (including all modifications and additions to such commitments over the life of the license) that are docketed and in effect.

[2] NEI is the policy organization for the nuclear technologies industry.

[3] LIC-105 is applicable to NRR staff, and provides them and their stakeholders with a common reference for handling regulatory commitments made by licensees for commercial nuclear reactors to NRC staff.

Definition of a Commitment

According to NEI-99-04, commitments are docketed, written statements describing a specific action that the licensee has agreed or volunteered to take. Agency and industry guidance documents distinguish between the safety importance and regulatory significance of different types of licensee actions such as obligations and commitments. In summary:

- Obligations are conditions or actions that are legally binding requirements imposed on licensees through applicable rules, regulations, orders, and licenses (includes technical specifications and license conditions).

- Commitments are appropriate for matters that are of significant interest to staff but do not warrant either (1) legally binding requirements, or (2) inclusion in the Updated Final Safety Analysis Reports (UFSAR)[4] or programs subject to a formal regulatory change control mechanism.

Unlike regulatory requirements contained in regulations, technical specifications, licenses, and orders, commitments are neither legally binding nor obligations of a license. According to LIC-105, NRC staff should escalate a commitment into a legally binding obligation only if the staff deems that the commitment is essential for ensuring public health and safety. NRC management asserts that once a commitment is escalated into a requirement, it is no longer a commitment, but rather it becomes a legal obligation and must be converted to an NRC enforceable requirement, such as a condition of the facility operating license.

Purpose of Commitments

As noted above, commitments are appropriate for matters that are of significant interest to staff, but do not warrant legally binding obligations. According to LIC-105, the regulatory process relies on commitments to, among other things, support the justification for a proposed licensing action or resolution of other regulatory related activities. Commitments

[4] The Final Safety Analysis Report (FSAR) is the principal document upon which the NRC bases its safety evaluation supporting the issuance of an operating license for a nuclear power plant. Changes made after the operating license has been issued are documented in a new document, the UFSAR, which serves as the official source of current plant design and analyses.

often result from a licensing action such as a license amendment, including power uprates, or from a generic communication, such as generic letters and bulletins. Further, LIC-105 states that NRC expects licensees to honor commitments that have a safety or regulatory purpose. Appendix A provides examples of commitments.

NRC expects licensees to honor commitments in good faith; however, noncompliance with a commitment can result in the issuance of a Notice of Deviation. A Notice of Deviation describes a licensee's failure to satisfy a commitment and requests a licensee to provide a written explanation or statement describing corrective steps taken (or planned), the results achieved, and the date when corrective action will be completed.[5] A Notice of Deviation is an administrative mechanism that is less severe than a Notice of Violation,[6] but allows NRC staff to request information from a licensee if the implementation of an action was not consistent with the mutually agreed-upon commitment.

Licensee Commitment Responsibilities

According to NEI-99-04, licensees are responsible for creating, implementing, and tracking all commitments made to NRC. As part of their business practices, licensees maintain a commitment management program to track a variety of commitments, including commitments made to NRC[7] and to non-regulatory organizations, as well as corrective actions and self-assessments.

The licensee is entirely responsible for tracking the commitments, and this includes any changes to the commitments and notification to NRC about such changes. NEI-99-04 includes guidance for changing commitments and criteria for determining if and when to inform NRC staff about a change. Although there is no regulatory requirement for such reporting, licensees will periodically report changes in commitments to the NRC via docketed correspondence. NEI-99-04 also provides flowcharts outlining a

[5] According to NRC staff, the agency has not issued any Notices of Deviation to licensees since 2007 for not fulfilling a commitment.

[6] According to NRC's *Enforcement Manual*, a Notice of Violation is a written notice that identifies an NRC requirement and how it was violated.

[7] NRC does not have comprehensive data on the number of commitments made by licensees each year, but licensee staff and NRC project managers estimated that 3 to 10 commitments are created for each plant annually.

commitment management change process to assist licensees in identifying changes that are significant to safety and/or of high regulatory interest that should be communicated to NRC.

NRC's Commitment Responsibilities

The primary responsibility for managing commitments within NRC is assigned to DORL project managers, but other NRC staff involved in decisionmaking processes that use commitments include DORL branch chiefs, NRR technical reviewers, and OGC.

DORL project managers are responsible for the general oversight and coordination of NRR activities—including management of commitments—related to the processing of licensing actions, generic issues, or policy issues for a specific licensee. Specifically, as part of NRC's oversight responsibilities, project managers are required every 3 years to audit licensee commitment management programs by assessing the adequacy of licensee implementation of a sample of commitments made to the NRC in past licensing actions.[8] Performance of these audits is not a requirement of NRC's inspection program, which does not assess how well licensees control commitments. Instead, the triennial audit requirement is described in LIC-105.

DORL branch chiefs are expected to ensure that the triennial audits of licensee commitment management programs are performed. In addition, they are expected to ensure that the project managers are appropriately trained and provided with the necessary tools during their reviews of specific licensing actions or other licensing tasks.

It is the role of NRR technical staff to review licensing actions and the supporting documentation—including any applicable commitments—to ensure that appropriate consideration has been given to technical issues. In many cases, project managers will seek subject matter expertise from the technical reviewers during the decisionmaking process.

According to NRR office instructions, NRR staff should coordinate their programmatic efforts with OGC. LIC-100, *Control of Licensing Bases for Operating Reactors;* and NEI-99-04, *Guidelines for Managing NRC Commitment Changes*, states that OGC plays a critical role in defining the

[8] The commitment audit requirement was initiated in 2003. As of February 2010, 65 nuclear power plants had been subject to an initial audit, and 23 plants had been subject to a followup audit.

elements of the licensing bases of nuclear facilities, in defining the appropriate controls for and other attributes of the elements of the licensing bases, and in processing some plant-specific changes to licensing bases information. Further, NRR staff should coordinate their programmatic and plant-specific efforts with OGC to ensure NRC products (e.g., licensing documents) comply with legal requirements.

II. PURPOSE

The audit objective was to assess the extent to which NRC appropriately and consistently utilizes and manages regulatory commitments for power reactor licensees. Appendix B contains information on the audit scope and methodology.

III. FINDINGS

Part of NRC's mission is to identify and accomplish those actions that provide the level of nuclear plant performance necessary to ensure adequate protection of public health and safety. A commitment is one tool that NRC uses in the overall licensing process to add flexibility, improve efficiency, and maintain the flow of information between the staff and licensees. The Office of the Inspector General (OIG) identified opportunities for improvement in the following three areas:

- Consistent implementation of commitment management audits.
- Staff understanding of the definition and use of commitments.
- NRC tracking of commitments.

A. Commitment Management Audits Are Inconsistently Implemented

To achieve NRC's mission of adequately protecting the public health and safety and the environment, NRC programs and processes should be carried out effectively, efficiently, and consistently. However, NRC inconsistently implements the audits of licensee commitment management programs. This is because agency guidance on implementing the triennial audits is incomplete and imprecise. Incomplete and imprecise guidance concerning the conduct of commitment management audits can result in ineffective audits, inefficient use of resources, and the appearance that NRC provides disparate oversight of similarly situated licensees.

Consistent Implementation of NRC Programs and Processes

To achieve NRC's mission of adequately protecting public health and safety and the environment, NRC programs and processes should be carried out effectively, efficiently, and consistently. Consistent implementation of NRC programs and processes facilitates a consistent regulatory framework for overseeing commercial nuclear power plants. One element of NRC's regulatory oversight process is the management of commitments, which includes conducting triennial audits of licensee commitment management programs. The triennial audits are a primary tool used by NRC for assessing licensee commitment management programs. In accordance with NRC's mission, the triennial audits of licensee commitment management programs should be implemented consistently.

Commitment Management Audits Are Inconsistently Implemented

NRC's triennial commitment management audits are not consistently implemented. There are disparities in how staff members develop samples of commitments for review and the thoroughness of the audits.

DORL project managers inconsistently identify the universe of commitments eligible for sampling for the triennial audits. Some of the various sources of information that project managers use to identify the universe of commitments include:

- Generic communications.
- Licensee correspondence.
- Prior commitment audit reports.

- UFSAR changes.
- Agencywide Documents Access and Management System (ADAMS).[9]
- NRC amendment logs.
- Licensee commitment tracking systems.
- Licensee corrective action programs.

Most project managers explained that when developing their audit sample, they consult various sources and/or combinations of sources, including ADAMS, their own records, and/or licensee kept records. For example, during the development of a commitment audit sample, some project managers indicated that they depended on a self-generated list of commitments to extract a sample of commitments for the audit, while other project managers said they rely solely upon ADAMS searches as their source of commitments (see Figure 1).

Figure 1: Percent of Project Managers Indicating Source for Developing Their Audit Sample

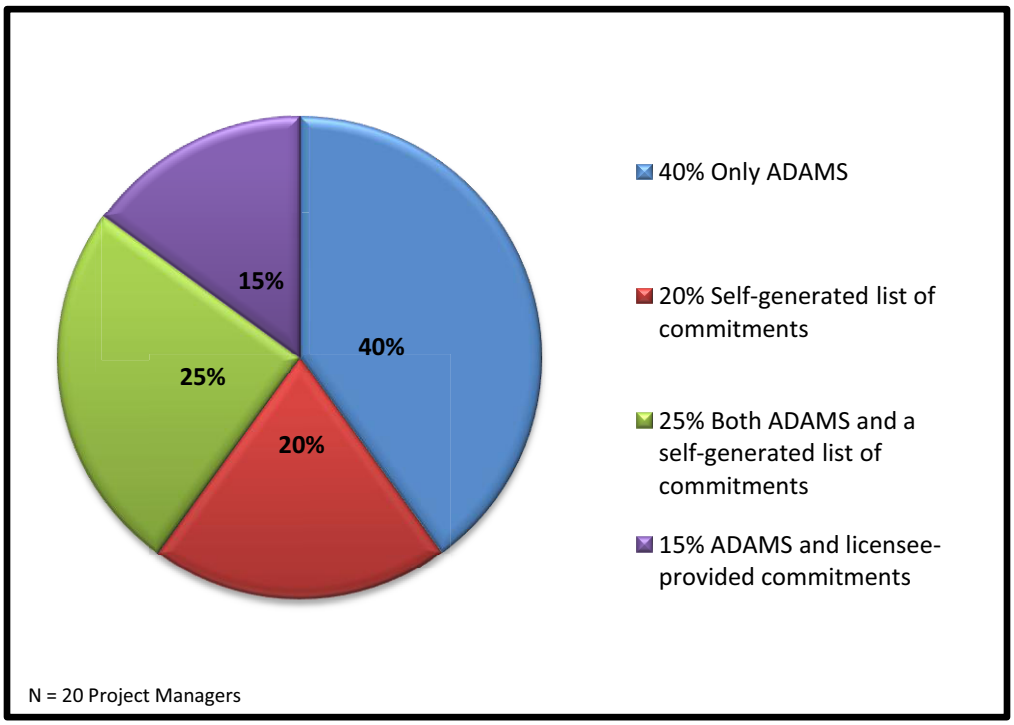

Source: **OIG analysis of interviews with staff.**

[9] ADAMS is the official recordkeeping system through which NRC provides access to libraries or collections of documents related to the agency's regulatory activities.

DORL staff members have varying views on what constitutes a thorough audit, and OIG observed differences in the conduct of the audits. For example, project managers and branch chiefs provided contrasting responses on whether the commitment management audit includes physical verification of commitments. Approximately half of the project managers interviewed said they would not physically or visually inspect the accomplishment of commitments, while all of the branch chiefs that OIG interviewed agreed that project managers should physically or visually inspect the accomplishment of commitments.

Further, OIG observed the performance of several commitment management audits of licensees and noted significant differences in how they were conducted. Two of the audits were performed at licensee nuclear power plant sites while one was performed at NRC headquarters. The two site audits differed markedly from each other in the depth of the review, including the degree to which the project manager reviewed supporting documentation and performed physical verification activities at the nuclear power plant. For example, one of the project managers verified that the licensee had completed a specific commitment, and when asked if further verification was needed, the project manager said that the commitment review stops at the completion of the commitment. However, another project manager reviewed the completion of the commitment and then requested additional supporting documentation that went beyond the documented completion of the specific commitment to ensure the proper changes and procedures had been correctly implemented. The project manager also reviewed associated documents that were directly or indirectly affected by the commitment to ensure that the licensee had made all relevant changes that were impacted by the commitment.

NRC Guidance Is Incomplete and Imprecise

Staff interpretations concerning conduct of the triennial commitment management audits vary because agency guidance[10] on conducting the audits is incomplete and imprecise. Specifically, agency guidance on developing a commitment management audit sample does not provide detailed direction on the sources to be used for identifying a universe of commitments. Furthermore, guidance on conducting the audits does not

[10] Although LIC-105 is the agency's primary guidance on managing commitments, other guidance documents such as LIC-100, *Control of Licensing Bases for Operating Reactors,* and LIC-101*, License Amendment Review Procedures,* reference commitments.

articulate the depth-of-review expectations and guidelines for performing the audits.

LIC-105 guidance on developing an audit sample is incomplete because it does not provide detailed direction on sources that should be used to identify the universe of commitments in preparation for an audit. For commitment sample selection, the guidance directs project managers to review commitments specifically made by licensees. The guidance does not offer the specific sources where commitments can be found. Based on this guidance, it is questionable whether project managers consistently draw their samples from an appropriate, representative, or inclusive universe.

Further, the LIC-105 section on conducting triennial commitment management audits is imprecise because it does not clearly articulate the depth-of-review expectations and guidelines for performing the audits. This guidance does not specifically address management expectations of staff to verify that commitments have been appropriately implemented in the plant facility, procedures, program, or other plant documentation. Rather, guidance simply notes that the project manager is responsible for determining the level of physical verification and document review depending on the nature of each commitment. This non-prescriptive approach affords the project manager a degree of flexibility in conducting the audit. However, it does not provide sufficient guidance to ensure that the audits are conducted consistently with regard to thoroughness and level of review.

Reduced Effectiveness and Efficiency, and the Appearance of Disparate Treatment

Incomplete and imprecise guidance on the conduct of triennial commitment management audits can result in ineffective audits, inefficient use of resources, and the appearance that NRC provides disparate oversight of similarly situated licensees.

The lack of clear direction from agency guidance contributes to reduced effectiveness of the triennial audits. Unless project managers identify the full universe of commitments for the audit sample and until the guidance provides more clarity with regard to the depth of the audit, the audits may not fully support NRC's objective to determine whether licensees successfully implement their commitments. This may lead to NRC staff

perceptions that the commitment management audits are ineffective. Indeed, some staff articulated to OIG a reluctance to continue performing the audits. Those audits that do not sample a complete universe of commitments or lack the rigor and depth to ensure that commitments were implemented represent an inefficient use of agency resources.

The inconsistencies in the implementation and conduct of the audits also lend an appearance of disparate treatment among licensees. Ideally, NRC should audit two licensees with similar commitments in a similar fashion. However, if two separate project managers reviewed the two licensees with different standards of proof and documentation, the result could be two very different outcomes, giving the appearance of different treatment.

Recommendations

OIG recommends that the Executive Director for Operations:

1. Revise the section of LIC-105, *Managing Regulatory Commitments Made by Licensees to NRC,* on conducting triennial commitment management audits to include detailed sampling direction, such as a checklist of sources to be used in identifying a universe of commitments from which to sample.

2. Revise LIC-105, *Managing Regulatory Commitments Made by Licensees to NRC,* to include well-defined expectations and guidelines regarding the conduct of commitment management audits. The guidelines should include an expectation that audited commitments are reviewed to ensure that they have been appropriately implemented in the plant facility, procedures, program, or other plant documentations.

B. Definition and Use of Commitments Are Inconsistently Understood

Agency staff should have a consistent understanding of commitments to perform their work effectively; however, the definition and use of commitments is not consistently understood throughout the agency. This occurs because NRC training on commitments is insufficient. Specifically, training does not effectively address the definition and use of commitments and is not provided to all agency staff involved in reviewing licensee commitments. This could potentially result in the misapplication of commitments by NRC staff.

Importance of Performance Management

Good performance management practices dictate that agency staff should have a consistent understanding of NRC's regulatory tools and their use, including commitments, so they can perform their work and collectively ensure protection of public health and safety and the environment. Furthermore, the agency's approach to performance management requires staff members to be highly trained in the technical disciplines relating to their duties, the regulatory processes that govern agency actions, and the regulatory principles inherent in making the agency a strong, independent, stable, and predictable regulator. Being a stable and predictable regulator implies that NRC must operate in a consistent regulatory framework. This requires staff associated with a particular regulatory program to have a consistent understanding of that regulatory program and associated policies, including the definitions and the tools used for evaluating and implementing the program.

Definition and Use of Commitments Are Inconsistently Understood

Agency staff, industry, and the public have various views on the definition of a commitment. Furthermore, agency staff expressed conflicting descriptions for the use of commitments.

Commitments Are Variously Defined by Stakeholders

Agency staff, industry personnel, and the public have various views of the definition of a commitment and whether commitments are enforceable. Figure 2 below shows the views expressed by members of these groups when asked whether commitments can be enforced by the NRC.

Figure 2: Perceptions of Enforceability of Commitments

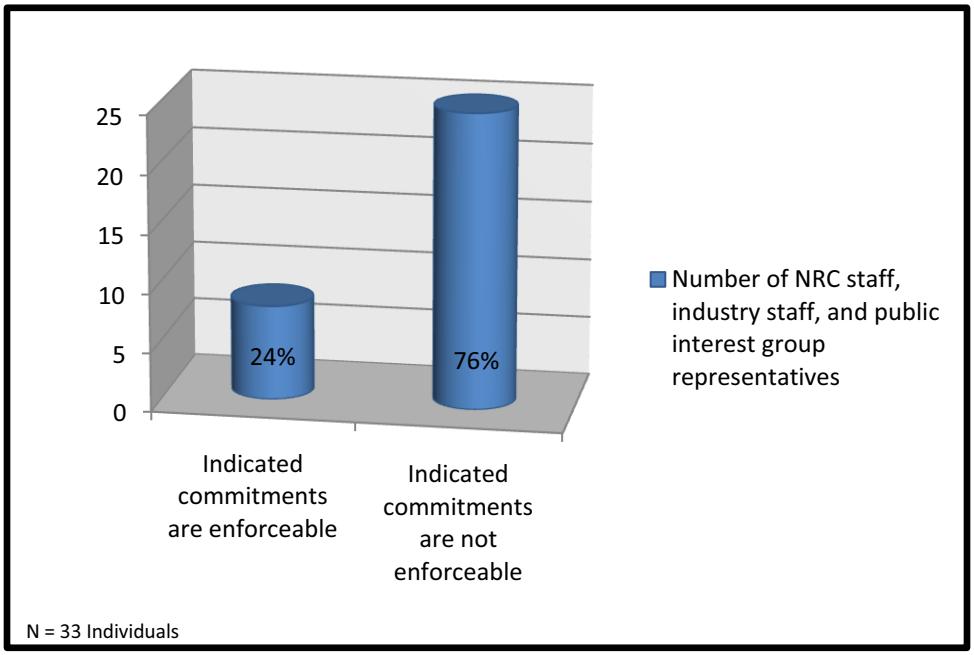

Source: **OIG analysis of interview data.**

DORL project managers explained that because commitments are not enforceable,[11] it is their responsibility to assess the level to which NRC staff rely on commitments and to make sure a commitment is the appropriate tool to ensure that the action is completed. Further, NRC staff explained that commitments are not a part of the license and are therefore not legally enforceable.[12] Under that interpretation, NRC could not issue a violation if a licensee fails to fulfill a commitment. However, other agency staff said that NRC could enforce commitments. For example, one branch chief said that a commitment is part of the licensing basis and is therefore enforceable. Other NRC staff members, including project managers, branch chiefs, and an OGC attorney, contended that the agency could take enforcement action if a licensee failed to fulfill the commitment.

Agency and industry staff articulated a hierarchy of commitments that the agency guidance does not specifically address. Some NRC staff have differentiated commitments based on their intended application and NRC's ability to oversee commitments using the terms "big C" commitments and

[11] The term "enforceable" describes a legally binding obligation, such as a condition of a facility's operating license.
[12] According to LIC-105, issues regarding the use of regulatory commitments usually center on the legal standing of the commitment and NRC staffs' ability to enforce the action committed to by a licensee. While licensees are not legally bound to fulfill a commitment, the NRC staff may use the administrative enforcement tool of a Notice of Deviation if a licensee fails to satisfy a commitment.

"small c" commitments. Some NRC staff have also used the terms "regulatory commitments" and "commitments" to differentiate between the "big C" and "small c" commitments, respectively. Furthermore, the definitions provided by staff for these different types of commitments were contradictory. For example, one project manager said that "big C" or "regulatory commitments" are safety-significant commitments that could become an obligation or condition of the license, while another project manager along with an OGC staff member explained that a "regulatory commitment" is similar to a "small c" commitment which is a non-enforceable, voluntary agreement between the licensee and NRC. Industry staff also articulated two kinds of commitments—"obligatory commitments" and "non-obligatory commitments"— to differentiate between commitments made in association with a requirement in a regulation and those commitments not explicitly identified in a regulation.

Moreover, there is a difference in the way the public and industry understands a commitment versus NRC staff's view of a commitment. Of 54 NRC staff members interviewed, 28 understood a commitment to be a low-level promise between NRC and the licensees. For example, seven staff members referred to commitments as a "gentleman's agreement" or as the "icing on the cake," essentially providing NRC additional assurance that licensees will take a particular action beyond that specified in the requirements. However, some industry staff and a public interest group see commitments as more formal, enforceable agreements.

Agency Staff Have Conflicting Views on Use of Commitments

Various agency staff involved in handling commitments expressed conflicting descriptions for the use of commitments. Particularly, agency staff members have differing views on whether a regulatory decision (e.g., amendments to licensing documents) can be based on a commitment (see Figure 3). Many NRC staff members believe regulatory decisions should be made without reliance on a commitment and the commitment should serve merely as extra assurance for NRC; however, other staff members believe that licensing actions could be approved with commitments and that, in some cases, NRC could not have approved the licensing action without a commitment.

Figure 3: NRC Staff Views on Role of Commitments in Regulatory Decisions

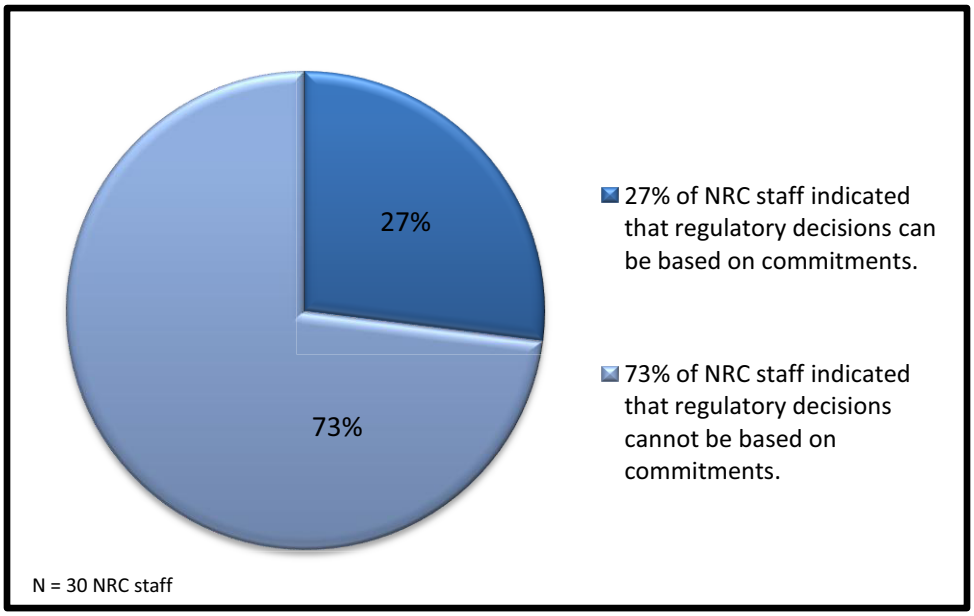

Source: **OIG analysis of interviews with staff.**

Some NRC staff are aware of a regulatory practice that incorporates the content of a commitment into a licensing action implementation statement, while others are unaware of this option. The term "implementation statement" is not defined in the agency guidance for commitments.[13] However, NRC staff members who reported using the implementation statement explained that it requires the licensee to place their commitment(s) into the UFSAR. This makes the commitment subject to the provisions of 10 CFR § 50.59[14] such that changes to the commitment by the licensee would result in a process to determine if prior NRC approval may be required. Additionally, NRC has the opportunity to review changes to the commitment when the UFSAR is updated according

[13] The terms "implementation statement," "implementation clause," and "implementation requirement" were used interchangeably by some NRC staff. Although the term "implementation statement" is not defined in agency commitment guidance, NRC staff explained that they could add an implementation statement or clause to the licensing amendment. This section of the approval letter lists the items to be implemented and the implementation timeframe in conjunction with or prior to the approval of the amendment. The implementation language might state, for example, "the implementation of the amendment shall also include…." Within this "implementation statement" is where a commitment may be inserted and incorporated into the FSAR.

[14] 10 CFR 50.59, *Issuance, Limitations, and Conditions of Licenses and Construction Permits: Changes, Tests and Experiments,* outlines the instances in which a license amendment would or would not be required due to a change in the facility or procedures described in the FSAR (as updated) or a test or experiment not described in the FSAR (as updated).

to 10 CFR § 50.71(e).[15] Therefore, certain commitments that are formally captured and included into the UFSAR through the implementation statement would receive more scrutiny by NRC staff. However, the use of the implementation statement as a tool that allows NRC to have more oversight of selected commitments is not consistently known among NRC staff. Specifically, of DORL staff asked if they had the knowledge and/or understanding of an implementation statement, more than 40 percent said their branch did not use it and they were unaware of such a statement being used by other DORL branches.

Insufficient Commitment-Specific Training

Current training on commitments does not sufficiently address the definition and use of commitments, and is not provided to all staff involved in reviewing licensee commitments. Providing commitment-specific training to all applicable NRC staff—including project managers, technical staff, and OGC involved in the formation or revision of reactor licensing actions—helps ensure that staff have the skills, knowledge, and abilities needed to perform their work. DORL is in the process of developing licensing-specific training for project managers that will address the application of commitments; however, this effort has not been addressed by all NRC offices involved in reviewing reactor licensee commitments.

Misapplication of Commitments

Until the various understandings of the definition and use of commitments are clarified, NRC risks improper application of commitments. For example, NRC staff may inappropriately rely on a commitment for a licensing decision when an obligation was required. In fact, some NRC staff members said that they would not have approved a particular licensing action without a specific commitment being present. Therefore, lacking a sound understanding of the appropriate application of a commitment, NRC staff may be accepting licensees' proposed commitments in lieu of an appropriate regulatory requirement, such as applicable licensing conditions, orders, rules, or regulations.

[15] 10 CFR § 50.71(e), *Maintenance of records, making of reports,* is the requirement for licensees to update their FSAR that was originally submitted as part of their application for a license. Subsequent revisions must be filed within a period not to exceed 24 months.

Recommendation

OIG recommends that the Executive Director for Operations:

3. Develop training that sufficiently addresses the definition and use of commitments and provide it to all agency staff involved in reviewing reactor licensee commitments.

C. NRC Staff Do Not Systematically Track Commitments

According to Federal regulations for preserving records and NRC guidance on records management, NRC should maintain records that are sufficient to document matters dealt with by NRC, including significant decisions and the decisionmaking process. NRC does not systematically track commitments because the agency does not have an adequate tool for tracking them, in part, because the agency has not identified a need for such a tool. Consequently, NRC cannot completely ensure oversight of commitments, which has implications for the agency's continuing awareness of significant commitments, the effectiveness of the triennial commitment management audits, and institutional knowledge management.

Preservation of Documents

Federal regulations require NRC to preserve records containing adequate and proper documentation of the functions, decisions, and essential transactions of the agency to ensure that the agency can find records when needed. According to Management Directive (MD) 3.53, *NRC Records Management Program*,[16] the agency should maintain records that are sufficient to document matters dealt with by NRC, including significant decisions and the actions taken to arrive at those decisions. This includes docketed commitments that are considered safety significant[17] and/or relied upon to make regulatory decisions. Documenting commitments that contain information supporting regulatory decisionmaking helps ensure that the agency captures pertinent information and that NRC can be responsive and accountable for its actions in communicating with reactor

[16] MD 3.53 contains procedures, standards, and guidelines for managing NRC's official records in accordance with U.S. National Archives and Records Administration and General Services Administration regulations.

[17] The term "safety significant" refers to a function whose degradation or loss could result in a significant adverse effect on defense-in-depth, safety margin, or risk.

licensees. Moreover, capturing commitments would assist NRC in knowing the universe and status of all commitments.

NRC Does Not Systematically Track Commitments

NRC does not systematically track commitments and, consequently, project managers cannot independently generate a list of all commitments related to a specific licensee, even those that were considered by staff to be safety significant and/or integral to approving a proposed licensing action. The agency does not collect commitments into a single document. Rather, commitments are included in various documents submitted by licensees. NRC relies on licensees to track their respective commitments and supply information to NRC on the status of the implementation/ closure of commitments for the purpose of the triennial audit. This is problematic because some staff members view certain commitments as safety significant and/or necessary for approval of proposed licensing actions.

Although project managers are not required to track commitments, OIG learned that some project managers informally track commitments. With no requirement to track commitments, these project managers create their own mechanisms for tracking this information because they seek the ability to independently conduct timely and thorough commitment searches. One experienced project manager explained that maintaining one's own list of commitments provides the opportunity to independently verify that the licensee's commitment-related information is adequately captured, tracked, and managed. Furthermore, the majority of NRC staff interviewed indicated that having a formal tracking tool for licensee commitments would be beneficial (see Figure 4). Many of the staff members who disagreed believe that tracking commitments would not be beneficial did so solely because they felt it would be an administrative burden for project managers.

Figure 4: NRC Staff View on Whether a Commitment Tracking Tool Would Be Beneficial

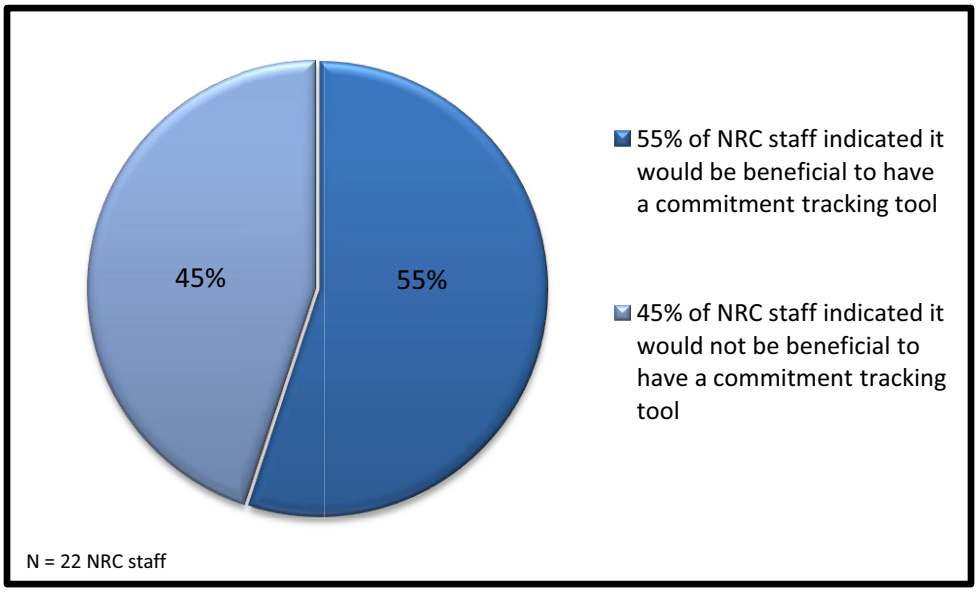

Source: **OIG analysis of interviews with staff.**

NRC Lacks an Adequate Commitment Tracking Tool

NRC does not have an adequate tool for tracking commitments, in part, because the agency has not identified a need for such a tool. NRC managers said that the agency staff should not rely on commitments for regulatory decisionmaking. However, these managers were unaware that some staff members had used commitments for the approval of licensing actions. Thus, the agency's lack of support for the tracking of commitments has been partly based on an assumption that staff were not using commitments for the purpose of regulatory decisionmaking.

OIG identified some instances of licensee commitments that were safety significant and/or necessary for approval of a proposed licensing action, as follows:

- Commitment A: Staff relied upon a commitment for approval of a licensee's amendment to make a technical specification change regarding reactor power monitoring equipment calibration. NRC's issuance letter stated that the approval of the amendment was based on the commitment. One interviewee—who was the branch chief at the time of the commitment—said, had the commitment not been fulfilled, NRC may have issued an order. Another NRC staff member, a technical reviewer, said that the license amendment

request would not have been accepted without the completion of the commitment.

- Commitment B: After a licensee conducted a power uprate-related evaluation, the licensee made a commitment to operate at a lower power level than allowed by the nuclear power plant license. NRC staff members said that if the commitment had not been completed, it could have adversely impacted safe plant operations. NRC managers involved in the power level approval agreed that they could postulate a safety-related problem had the licensee opted not to implement the commitment. Later, an OGC attorney confirmed that a commitment was not appropriate in this instance; instead, a license amendment should have been used.

- Commitment C: For a requested amendment to extend the allowed out-of-service time for a plant's diesel generators, the staff determined that a commitment was necessary. Two NRC staff members, a technical reviewer and an OGC attorney, said that a commitment to modify a circuit breaker was necessary for the amendment.

OIG did not perform a detailed search and review of commitments to identify commitments, similar to the examples above, that were safety significant and/or necessary for approval of a proposed licensing action. Therefore, it is possible that additional examples exist. The agency also does not know the extent to which such commitments exist because it has not identified commitments that the staff had considered safety significant and/or necessary for approval of a proposed licensing action.

Agency Cannot Ensure Oversight of Commitments

Until the agency tracks safety significant commitments, NRC will not be able to ensure oversight of such commitments. Consequently, there are implications for the agency's continuing awareness of significant commitments, the effectiveness of the triennial commitment management audits, and institutional knowledge management. Further, NRC risks erosion of its licensing logic, wherein the agency would rely on non-mandatory commitments in lieu of licensing conditions or obligations for nuclear power plant licensing.

Agency Awareness of Commitments

Without a tracking system, significant commitments could be overlooked or forgotten. For example, a 1979 safety significant commitment resurfaced in 2007 when an NRC inspection found the commitment and issued a Notice of Deviation to the licensee because action to address the commitment had not been completed. If NRC had a process to independently track commitments, the agency would have been able to monitor the implementation of the commitment, and any failure by the licensee to take action would have been identified earlier. Instead, the oversight and tracking of commitment implementation by NRC is ad hoc, making it difficult for the agency and staff members to identify deviations from poorly documented plans. However, effective use of the triennial commitment management audits to identify potential inappropriately-applied commitments and agency training on the proper implementation of commitments, once implemented and reviewed by OIG, may obviate the need for a tracking system.

Impact on Triennial Commitment Management Audits

NRC risks conducting ineffective triennial commitment management audits because significant commitments may not be included in the commitment management audit samples. OIG learned during an audit it observed that NRC missed commitments made during an entire year between NRC's initial and first followup audit of a licensee's commitment management program. OIG notified the project manager of the missed timeframe, and the project manager stated a belief that it was unnecessary to increase the audit sample to include the missed year's commitments because the licensee performs its own internal audits.

Impact on Institutional Knowledge Management

Employee attrition could potentially result in the agency's loss of undocumented information, particularly in those instances where some project managers have developed their own commitment tracking systems. Commitment related information to support future projects or regulatory decisionmaking may not be available for germane agency staff if the agency does not formally capture the information. The commitment management audits should identify and correct situations where commitments were used inappropriately. Properly documenting relevant information is a critical aspect of effective oversight and demonstrates that

NRC operates with due care and can be accountable for its oversight of commitments.

Risks to NRC's Licensing Logic

NRC risks not following its established licensing logic, leaving the agency in a potential position whereby the licensing of nuclear power plants depends on non-mandatory commitments. The licenses for operating nuclear power plants include requirements that ensure that the functional capability or performance levels of equipment required for safe operation of the facility are maintained. The requirements in licenses are mandatory and require compliance by the licensee. If NRC allows reliance on commitments for the approval of license amendments, it risks making the basis of safe operation reliant on actions that are not required.

Recommendations

OIG recommends that the Executive Director for Operations:

4. Identify actions to determine the extent to which commitments that are considered safety significant and/or necessary for approval of proposed licensing actions exists. This could be accomplished by either: (1) NRR project managers identifying any such commitments as part of the triennial commitment management audits, or (2) conducting a review of all existing commitments and identifying any inappropriately applied commitments. Any such commitments should be identified to NRC management for appropriate action.

5. Depending on the outcome of the efforts to meet recommendation 4, develop and utilize a tool for systematically tracking the status of commitments that are deemed safety significant and/or necessary for approval of proposed licensing actions.

IV. CONCLUSION

NRC commitments are a valuable regulatory tool that add flexibility to the regulatory review framework. They also play a key role in facilitating the agency's decisionmaking process on matters that can be highly safety significant. Specifically, they provide additional assurance to the agency that a licensee action will not adversely affect the safe operation of the plant. Therefore, it is essential that all agency staff who work with commitments clearly understand the appropriate application and role of commitments to facilitate their consistent use. However, not all NRC staff understand the appropriate use of commitments. By enhancing agency guidance and training on the role and use of commitments, as well as requiring routine review and capture of commitments pertaining to safety-significant decisions, the agency can further strengthen its pledge to promote the safe operation of the nation's power reactors.

V. CONSOLIDATED LIST OF RECOMMENDATIONS

OIG recommends that the Executive Director for Operations:

1. Revise the section of LIC-105, *Managing Regulatory Commitments Made by Licensees to NRC,* on conducting triennial commitment management audits to include detailed sampling direction, such as a checklist of sources to be used in identifying a universe of commitments from which to sample.

2. Revise LIC-105, *Managing Regulatory Commitments Made by Licensees to NRC,* to include well-defined expectations and guidelines regarding the conduct of commitment management audits. The guidelines should include an expectation that audited commitments are reviewed to ensure that they have been appropriately implemented in the plant facility, procedures, program, or other plant documentations.

3. Develop training that sufficiently addresses the definition and use of commitments and provide it to all agency staff involved in reviewing reactor licensee commitments.

4. Identify actions to determine the extent to which commitments that are considered safety significant and/or necessary for approval of

proposed licensing actions exists. This could be accomplished by either: (1) NRR project managers identifying any such commitments as part of the triennial commitment management audits, or (2) conducting a review of all existing commitments and identifying any inappropriately applied commitments. Any such commitments should be identified to NRC management for appropriate action.

5. Depending on the outcome of the efforts to meet recommendation 4, develop and utilize a tool for systematically tracking the status of commitments that are deemed safety significant and/or necessary for approval of proposed licensing actions.

VI. AGENCY COMMENTS

On August 9, 2011, OIG issued the discussion draft of this report to the Executive Director for Operations. OIG met with NRC management officials and staff on August 12, 2011, at which time the agency provided informal comments to the draft report. OIG subsequently met with agency management and staff during an August 23, 2011, exit conference to discuss agency informal comments that OIG incorporated into the draft report as appropriate. At this meeting, agency management provided supplemental information that has also been incorporated into this report as appropriate. NRC management and staff reviewed the revised draft report and generally agreed with the recommendations in this report. Furthermore, the agency opted not to provide formal comments for inclusion in this report.

Appendix A

EXAMPLES OF COMMITMENTS

Commitments are generated from different sources, including license amendments, notices of enforcement discretion, generic letters, and other operational and licensing documents. However, the commitments are documented as written communication from the licensee to NRC. The following examples illustrate some of the sources and types of commitments utilized by the industry and NRC.

Example 1: Commitment to upgrade a spent fuel pool crane

> All heavy load lifts in or around the spent fuel pool made using the upgraded Auxiliary Building crane lifting system will meet the guidance in NUREG-0612.

This commitment was made in support of a license amendment related to the plant's spent fuel pool crane. In this case, the licensee committed to limit use of the crane so that objects above a specific weight would not be lifted unless the crane was upgraded.

Example 2: Commitment to maintain a minimum amount of fuel oil available

> The licensee commits to administratively control the amount of fuel oil in each fuel oil storage tank such that a minimum usable amount of 25,000 gallons (including the day tanks) is available to supply each EDG [emergency diesel generator] (without reliance on a portable transfer pump), for the duration of the enforcement discretion.

In this case, a licensee made a commitment in support of the licensee receiving approval for temporary enforcement discretion for a requirement related to an emergency diesel generator. The licensee committed to maintain an amount of fuel in the plant's fuel oil storage tanks that was greater than the minimum amount normally required.

Example 3: Commitment to modify the containment emergency sump of a nuclear power plant

> Installation of Unit 1 and Unit 2 new post loss of coolant accident containment sump recirculation screens, completion of required modifications and implementation of required procedural changes.

A licensee made this commitment to the NRC in response to an NRC Generic Letter. NRC originally sent the Generic Letter to licensees of pressurized water reactors to communicate a generic concern with their containment emergency sumps. In response to this concern, this licensee committed to make modifications to its reactors' sumps recirculation screens.

Appendix B

SCOPE AND METHODOLOGY

The audit objective was to assess the extent to which NRC appropriately and consistently utilizes and manages regulatory commitments for power reactor licensees. The audit focused on reviewing the oversight of commitments through an examination of documents, interviews, and observations.

OIG reviewed relevant Federal regulations regarding the management and use of commitments, including 10 CFR § 54.3, *Requirements for Renewal of Operating Licenses for Nuclear Power Plants*, and 10 CFR § 50.59, *Issuance, Limitations, and Conditions of Licenses and Construction Permits: Changes, Tests and Experiments.* OIG also reviewed agency and industry guidance, including LIC-105, *Managing Regulatory Commitments Made by Licensees to the NRC*; LIC-100, *Control of Licensing Bases for Operating Reactors;* and NEI-99-04, *Guidelines for Managing NRC Commitment Changes.* OIG reviewed generic communication documents as well as licensing documents such as license amendments. Furthermore, OIG reviewed NRC inspection procedures, SECY papers, office handbooks, and all (88) NRC commitment audit reports published between January 2004 and February 2009.

OIG interviewed NRC staff who participated in activities related to the management of commitments. These interviews included resident inspectors, OGC staff, NRC technical reviewers, DORL project managers, DORL staff, and agency managers. In all, OIG conducted interviews with 54 NRC staff members to obtain staff insights into the oversight of licensees' commitments and commitment management programs.

OIG also conducted interviews with industry representatives, a public interest group representative, and licensee staff. The audit team also observed three audits of licensee's commitment management programs performed by DORL project managers.

This performance audit was conducted at NRC headquarters (Rockville, MD) and selected commitment audit sites in Regions II and III, from October 2010 through May 2011, in accordance with generally accepted Government auditing standards. Those standards require that the audit is planned and performed with the objective of obtaining sufficient,

appropriate evidence to provide a reasonable basis for any findings and conclusions based on the stated audit objective. OIG believes that the evidence obtained provides a reasonable basis for the report findings and conclusions based on the audit objective. Internal controls related to the audit objective were reviewed and analyzed. Throughout the audit, auditors were aware of the possibility or existence of fraud, waste, or misuse in the program.

The audit work was conducted by R.K. Wild, Team Leader; Kevin Nietmann, Senior Technical Advisor; Jaclyn Storch, Audit Manager; Andrea Ferkile, Senior Management Analyst; Joseph Capuano, Auditor; and Dana Furstenau, Student Management Analyst.

Entergy New Contention NYS-38/RK-TC-5
Attachment 3

REVIEW OF LICENSE RENEWAL ACTIVITIES

PROGRAM APPLICABILITY: This temporary instruction (TI) applies to Indian Point Nuclear Generating Unit 2 and Pilgrim Nuclear Power Station only.

2516/001-01 INSPECTION OBJECTIVES

01.01 To report the status of the applicant's implementation of license renewal commitments, license conditions and selected aging management programs as described in a plant's license renewal safety evaluation report (LR-SER).

01.02 To verify that the license renewal application is updated annually in accordance with the requirement to submit changes to the current licensing basis (CLB) during the U.S. Nuclear Regulatory Commission (NRC) review of the license renewal application (as required by 10 CFR 54.21(b)).

01.03 To verify that "newly identified" systems, structures, and components (SSCs) are included in the annual FSAR updates as required by 10 CFR 54.37(b) and the guidance provided in Regulatory Issue Summary (RIS) 2007-16, Revision 1, "Implementation of the Requirements of 10 CFR 54.37(b) for Holders of Renewed Licenses," dated April 28, 2010.

01.04 To verify that the applicant's description of the programs and activities for managing the effects of aging are consistent with the final safety analysis report (FSAR) supplement summary descriptions (included in Sections 3 and 4 of the LR-SER).

2516/001-02 BACKGROUND

Recently, the NRC experienced challenges in the inspection of license renewal activities and documentation of inspection results associated with completion of Inspection Procedure (IP) 71003, "Post-Approval Site Inspection for License Renewal," at the Oyster Creek facility. These challenges resulted because (1) IP 71003 was structured to be completed after the license was renewed, (2) license renewal at Oyster Creek station was delayed, and (3) the NRC expected to verify that the applicant had implemented license renewal commitments before it entered the period of extended operation (i.e., the post-40-year license period). This TI is written to allow for timely verification by NRC inspectors that the applicant has made sufficient progress in implementing its license renewal commitments before entering its post-40-year license period and to allow documentation of these inspection activities while the operating

license is being considered for renewal.

This TI shall be performed in cases where holders of an operating license meet the criteria of 10 CFR 2.109, "Effect of Timely Renewal Application," for timely renewal but IP 71003 cannot be performed in a timely manner because the NRC's final decision regarding the renewal of the operating license may not allow sufficient time to plan and conduct post license-renewal inspection before the period of extended operation.

The primary purpose of this TI is to allow the NRC to verify selected commitments made by the applicant during the license renewal process when such verification requires access to areas normally not accessible during power operations and to verify that the applicant has successfully implemented commitments associated with other SSCs outside containment or high-radiation areas as described in its LR-SER before the applicant enters the period of extended operation (the post-40-year licensing period).

The focus of the TI will be to verify testing of SSCs and applicant implementation of aging management programs associated with SSCs that require inspector access to containment or to areas normally considered high-radiation areas during power operations. Additionally, inspectors will verify the applicant's completion of selected license renewal commitments, other than those requiring access to containment or to high-radiation areas, to ensure confidence that the applicant has made reasonable progress in completing its license renewal commitments before entering the period of extended operation. Any additional inspections to follow up on issues identified during this TI should be performed using IP 71003 if the license is renewed. Also, the NRC should have completed IP 71002, "License Renewal Inspection," before this TI is performed.

2516/001-03 INSPECTION REQUIREMENTS AND GUIDANCE

03.01 Review of License Renewal Commitments and License Conditions. Select a sample of completed commitments and license conditions to verify that the applicant has completed the actions necessary to comply with the draft license conditions in the NRC staff's LR-SER and has implemented the aging management programs and time-limited aging analyses (TLAAs) included in the LR-SER.

Inspectors should familiarize themselves with the requirements and guidance relating to license renewal in general. The inspectors should familiarize themselves with the specific license renewal application and associated LR-SER for the plant being inspected. License renewal requirements and guidance documents that should be reviewed before an inspection include the following:

- 10 CFR Part 54
- Statement of Consideration published with the revision to 10 CFR Part 54 in the *Federal Register*, Volume 60, No. 88, May 8, 1995, pages 22461 to 22495
- plant-specific license renewal application

- SER and Appendix A for the plant(s) to be inspected

In selecting samples, consideration should be given to attributes such as the following:

- risk significance of the commitments, using insights gained from sources such as the NRC's "SDP Risk Informed Inspection Notebooks", Revision 2

- extent of previous license renewal audits and inspections of aging management programs

- extent that baseline inspection programs will inspect SSCs or a commodity group

- results of the one-time inspections (e.g., selective leaching inspection) to ensure that either there is no aging effect or the aging effects detected were properly evaluated

- draft license condition(s) to address existing plant issue(s)

Before performing these inspections, the lead inspector will determine the number and nature of proposed license conditions and commitments to be reviewed. The sample should include as many proposed license conditions and commitments, which were identified by the staff during the application review, as inspection resources will allow. The inspection will also include those proposed license conditions and commitments made by the applicant, which were either modified/enhanced or agreed upon by the staff, and selected in accordance with their risk significance.

The inspection team will inspect the proposed license conditions and commitments to the extent necessary to determine that they were implemented as described in the LR-SER and that any modification of commitments was done in accordance with 10 CFR 50.59, "Changes, Tests and Experiments," and established commitment management guidance. The inspection team should determine that there is reasonable assurance that the commitment tracking program is effective.

03.02 Verification of Annual Update. Verify that the license renewal application is updated annually in accordance with the requirement to submit changes to the CLB during NRC review of the license renewal application, according to 10 CFR 54.21(b).

03.03 Verification of Inclusion of Newly Identified SSCs in the FSAR Updates. Verify that "newly identified" SSCs are included in the annual FSAR updates as required by 10 CFR 54.37(b) and the guidance provided in RIS 2007-16.

Applicants may identify new SSCs that should be within the scope of its license renewal program at any time. These SSCs are "newly identified" pursuant to 10 CFR 54.37(b), which has been further clarified in RIS 2007-16 as part of NRC generic communications. The NRC may also specify additional newly identified SSCs that one or more holders of renewed licenses must evaluate and include as applicable in its next FSAR update in accordance with 10 CFR 54.37(b).

Inspectors should contact NRR/Division of License Renewal (DLR) staff for (1) information on generic communications that were issued naming newly identified SSCs, or (2) technical assistance in the review of new aging management programs that have been developed by the applicant.

03.04 Review of License Programs. Verify that the applicant's description of the programs and activities for managing the effects of aging are consistent with the FSAR supplement summary descriptions (included in Sections 3 and 4 of the LR-SER).

The updated FSAR (UFSAR) supplement describes the aging management programs and TLAA approved by the NRC in the SER issued with the renewed license. This inspection will also verify that the applicant's aging management program or TLAA being implemented is consistent with the UFSAR description and that changes, caused by the inclusion of "newly identified" SSCs, were included in the UFSAR. If the applicant has not submitted an UFSAR update since implementing the program or TLAA, the inspection team will review the planned UFSAR changes and verify that they are included in an appropriate tracking system.

The inspectors should determine the basis for the removal or addition of SSCs or commodity groups to an aging management program and whether the basis was justified as a part of the annual update.

2516/01-04 REPORTING REQUIREMENTS

The inspector should document the following aspects of the inspection for each inspected area or commitment, as appropriate:

a. Identify how the inspection was conducted (i.e., the methods of inspection). Methods can include a walkdown, an in-office review, observation of tests, and discussion with plant personnel.

b. Identify what was inspected. Include sufficient detail on which and how many samples were completed. If more than six documents were reviewed, then list the items in an attachment and reference the attachment in the scope section.

c. Identify the inspection objectives and the criteria that were used

d. Report the specific conditions that were not met and the planned completion dates for commitments that have not been completely implemented

e. Include reference to applicant's corrective action documents that describe issues regarding license renewal commitment implementation to allow follow-up of identified commitment implementation issues in the future.

Issues of concern resulting from this TI shall be documented in an inspection report. An issue of concern in this area is a collection of well-defined observations that raise questions on the applicant's adequate implementation of proposed license conditions, commitment or aging management programs. For the purpose of this TI, issue of

concern only applies to passive components.

Potential safety issues that may involve performance deficiency by the applicant as defined in the NRC Inspection Manual Chapter (IMC) 0612, “Inspection Reports,” shall be referred to the site resident inspection staff for follow-up, if needed, and determination of risk significance.

2516/01-05 COMPLETION SCHEDULE

Portions of this TI should be completed during the outage preceding the beginning of the period of extended operation for the purpose of observing or verifying commitments of tests or other activities that require containment entries or access to rooms that would be normally be posted as a high-radiation area or higher when the reactor is operating. The remaining portion of this TI can be completed at any other time before the period of extended operation. The team composition and size can vary for the purpose of conducting either the outage or nonoutage portion of this inspection. Also, additional inspection can be performed during the period of extended operation, after the license has been renewed, to follow up on issues identified during previous license renewal inspections. The inspections, with the exception of the followup portion to be conducted once the license is renewed and during the period of extended operation, should be completed by December 31, 2013.

2516/01-06 EXPIRATION

This TI will expire on December 31, 2013.

2516/01-07 CONTACT

For questions regarding performance of this TI or emergent issues, contact Chief, Renewal of Program Operations Branch (RPOB)/DLR/NRR, or Chief, Reactor Inspection Branch/Division of Inspection and Regional Support/NRR. The inspectors should request assistance from NRR technical staff if the visual inspection requires more extensive knowledge of aging effects to a specific structures or component.

2516/01-08 STATISTICAL REPORTING

Direct inspection effort in implementing this TI should be charged to TI 2516-001. An IPE code of LI should be used for all direct inspection effort. An IPE code of LRP should be used for any indirect inspection effort for preparation and/or documentation.

2516/01-09 RESOURCE ESTIMATES

The inspection resources required to complete this TI are the same as the inspection resources required to complete IP 71003. It has been estimated that this TI will require approximately 2 weeks of inspection time on site involving a team of four inspectors and an inspection lead. An additional week will be allocated each to inspection preparation, in-office review between 2 onsite weeks, and documentation of the inspection results. The team leader will require an additional week of preparation and an additional 2 weeks to finalize the inspection report. Based on these estimates, each inspection will require about 28 inspection weeks. It is estimated that each unit at each site will require an inspection; however, later inspections at multiunit sites may not require the same level of effort as the inspection of the first unit.

Completion of this TI will satisfy completion of IP 71003 inspection requirements. Inspection resources to complete this TI and IP 71003 should not exceed 28 inspection weeks.

2516/01-10 TRAINING

No formal training is proposed for the performance of this TI. Regions should contact the DLR if they need technical support during the inspection of license renewal commitments.

2516/01-11 REFERENCES

10 CFR Part 54, “Requirements for Renewal of Operating Licenses for Nuclear Power Plants”

Statement of Consideration published with the revision to 10 CFR Part 54 in the Federal Register, Vol. 60, No. 88, May 8, 1995, pp. 22461 to 22495

Plant-specific license renewal application

SER and Appendix A for the plant(s) to be inspected

END

Attachment 1: Revision History

Attachment 1

Revision History for TI 2516/001

Commitment Tracking Number	Issue Date	Description of Change	Training Needed	Training Completion Date	Comment Resolution Accession Number
N/A	ML110620255 03/30/11 CN 11-004	Reviewed commitments and none found for 4 years. New temporary inspection procedure to provide inspection guidance related to verification of license renewal commitments.	No	N/A	N/A

Entergy New Contention NYS-38/RK-TC-5
Attachment 4

POST-APPROVAL SITE INSPECTION FOR LICENSE RENEWAL

PROGRAM APPLICABILITY: IMC 2515

71003-01 INSPECTION OBJECTIVES

01.01 To verify that license conditions added as part of the renewed license, license renewal commitments, selected aging management programs, and license renewal commitments revised after the renewed license was granted, are implemented in accordance with Title 10 of the *Code of Federal Regulations* (CFR) Part 54, "Requirements for the Renewal of Operating Licenses for Nuclear Power Plants."

01.02 To verify that "newly identified" systems, structures, and components (SSCs), pursuant to 10 CFR 54.37(b), and Regulatory Issue Summary RIS-2007-16, are implemented in accordance with 10 CFR Part 54.

01.03 To verify, on a sample basis, that the description of the aging management programs and related activities covered in §01.01 are, or will be, contained in the updated final safety analysis report (UFSAR) and that the description of the programs is consistent with the programs implemented by the licensee.

71003-02 INSPECTION REQUIREMENTS

General Inspection Requirements.

a. The post-renewal inspections (PRI) verify, on a sampling basis, that:

   1. The licensee has completed the necessary actions to comply with the license conditions that are a part of the renewed operating license, and has implemented the aging management programs and time-limited aging analyses (TLAA) included in the staff's license renewal safety evaluation report (SER).

   2. The licensee followed the guidance in NEI 99-04 for the license renewal commitment change process, including the elimination of commitments, and properly evaluated, and reported where necessary, changes to license renewal commitments listed in the UFSAR in accordance with 10 CFR 50.59.

3. The licensee has identified, evaluated, and incorporated "newly identified" SSCs into the renewed license in accordance with 10 CFR 54.37(b).

b. The UFSAR supplement describes the aging management programs and TLAA, approved by the NRC in the SER issued with the renewed license. This inspection will also verify that the UFSAR description matches the aging management program or TLAA being implemented and that changes, caused by the inclusion of "newly identified" SSCs, were included in the UFSAR. If the licensee has not submitted a UFSAR update since implementing the program or TLAA, review the planned UFSAR changes and verify that they are included in the an appropriate tracking system.

71003-03 INSPECTION GUIDANCE

03.01 General Guidance

a. The inspection is intended to sample the licensee's implementation of the following license renewal-related activities covered in §01 in the following manner:

1. Inspectors should familiarize themselves with the requirements and guidance relating to license renewal in general. The inspectors should familiarize themselves with the specific license renewal application and associated SER for the plant being inspected. License renewal requirements and guidance documents that should be reviewed prior to an inspection include:

   - 10 CFR Part 54, "Requirements for Renewal of Operating Licenses for Nuclear Power Plants"
   - The statement of consideration published with the revision to 10 CFR Part 54 in the Federal Register, Vol. 60, No. 88, Monday, May 8, 1995, pages 22461 to 22495
   - The plant-specific renewed license and license conditions
   - The SERs for the plant(s) to be inspected
   - Appendix A of the SER

2. In selecting samples, consideration should be given to attributes such as:

   - the risk significance of the commitments, using insights gained from sources such as the NRC's "SDP Risk Informed Inspection Notebooks", Revision 2
   - the extent of previous license renewal audits and inspections of aging management programs
   - the extent of a commitment
   - the extent that baseline inspection programs will inspect an SSC or commodity group
   - the amount of time since the renewed license was granted and beginning of the period of extended operation

- the results of the one time inspection (e.g., selective leaching inspection), to ensure that either there is no aging effect or aging effects detected were properly evaluated

b. The lead inspector will determine the number and nature of license conditions and commitments to be reviewed prior to performing these inspections. The sample should include all conditions placed on the license as part of license renewal, and as many commitments, which were identified by the staff during the course of the application review, as inspection resources will allow. The inspection will also include those commitments made by the applicant, which were either modified/enhanced or agreed upon by the staff, and selected in accordance with the risk guidance given in the above Section 03.01.a.

The population of license conditions and commitments will be inspected to the extent necessary to determine that the license conditions and commitments were implemented as described in the SER, that any modification of commitments was done in accordance with 10 CFR 50.59 and established commitment management guidance, and that prior NRC approval was obtained for changes to license conditions. The inspection team should determine there is reasonable assurance the commitment tracking program is effective.

Any “newly identified” SSCs will be inspected to the extent necessary to ensurethat the licensee adequately evaluated and included applicable SSCs into its aging management programs or TLAAs, as required under 10 CFR 54.37(b).

1. Inspection of outstanding commitments should include a review of supporting documentation to determine if the licensee has taken the appropriate actions, including corrective action, to satisfy a particular license condition or commitment. Appropriate technical expertise should be sought if needed.

2. The PRI may require visual inspection of structures and components during the resolution of a particular commitment. Therefore, portions of the inspection may have to be performed during a unit outage to allow visual observation of those structures and components which are not accessible during power operation, e.g., inside containment, and normal high radiation areas. The inspectors should request assistance from NRR technical staff if the visual observations require intricate knowledge of aging effects to a specific structure or component.

3. Commitments that are not implemented by the licensee, except those the NRC previously agreed could be delayed, deferred, or eliminated, after the extended period of operation commences will be evaluated for NRC enforcement action using Inspection Manual Chapter (IMC) 0308 “Reactor Oversight Process Basis Document”, IMC 609 “Significance Determination Process”, in keeping with the NRC’s "General Statement of Policy and Procedure for NRC Enforcement Actions - Enforcement Policy,"

c. The inspectors should verify the UFSAR supplement describes the aging management programs and TLAAs as approved by the NRC in the SER issued with the renewed license, or as subsequently amended. The inspectors should determine the basis for the removal or addition of SSCs or commodity groups from/to an aging management program and whether the basis was justified.

d. The PRI program will be implemented before commencement of the extended period of operation, which should be clearly stated in the inspection plan. This plan will also state the appropriate time and duration of the program. Portions of the inspection program may be performed before the period of extended operation and/or during the unit outage preceding the extended operation date. Subsequent inspection(s) may be necessary, if outstanding commitments and/or issues remain after the completion of the initial PRI.

71003-04 RESOURCE ESTIMATES

It has been estimated that the post-renewal inspections will require approximately two weeks of inspection time onsite involving a team of four inspectors and an inspection lead. An additional week will be allocated each to inspection preparation, in-office review between two onsite weeks, and for documentation of the inspection results. The team leader will require an additional week of preparation and an additional two weeks in order to finalize the inspection report. Based on these estimates, each PRI will require about 28 inspection weeks. It is estimated that each unit at each site will require an inspection; however, later inspections at multi-unit sites may not require the same level of effort as the first unit PRI inspection. The level of remaining effort will be determined by the Regional Administrator, or his designee, following completion of the first inspection at a particular site.

Note to the Lead Inspector Regarding the Identification of Newly Identified SSCs. Licensees may identify new SSCs that should be within the scope of its license renewal program at any time. These SSCs are “newly identified” pursuant to 10 CFR 54.37(b), which has been further clarified in Regulatory Issue Summary RIS-2007-16 as part of NRC generic communications. The NRC may also specify additional newly identified SSCs that one or more holders of renewed licenses must evaluate and include as applicable in its next FSAR update in accordance with §54.37(b).

Contact NRR/DLR staff for (1) information on generic communications that were issued naming newly identified SSCs, or (2) technical assistance in the review of new aging management programs that have been developed by the licensee. The intent of §54.37(b) is to capture those SSCs that, if they had been identified at the time of the license renewal application, would have been subject to an AMR or evaluation as a TLAA. Newly identified SSCs are those SSCs that meet one of the two following conditions:

a. There is a change to the current licensing basis (CLB) that:

- Impacts SSCs that were not in scope for license renewal when the license renewal application was approved, and

- The SSCs would have been in the scope of license renewal based on the CLB change if §54.4(a) were applied to the SSCs;

b. SSCs were installed in the plant at the time of the license renewal review that in accordance with its CLB at the time, should have been in the scope of license renewal per §54.4(a) but were not identified as in scope until after the renewed license was issued.

SSCs that are plant additions or modifications installed after the renewed license is issued are not subject to the provision of §54.37(b) as per staff communication with the industry when RIS-2007-16 was issued.

END

ATTACHMENT 1

EXPIRATION DATES OF ORIGINAL LICENSES

The following pages provide a convenient compilation of operating license expiration dates for inspection planning purposes. Plants are listed on an individual unit basis, by region and the date when their [original] operating license expires. Inclusion on this list does not mean that the plant has come in with an application to operate beyond the original operating license nor does it mean that NRC has granted a renewed operating license. Prior to scheduling this inspection, it is incumbent upon the Region to determine that a renewed operating license has been granted and that the conditions for performing the inspection have been met.

Attachment 1.1

Region I Plants — Original Operating License Expiration Dates

Plant Name	Expiration Date
Oyster Creek Generating Station	04/09/09
Nine Mile Point Nuclear Station, Unit 1	08/22/09
Ginna Nuclear Power Plant	09/18/09
Vermont Yankee Nuclear Power Station	03/21/12
Pilgrim Nuclear Power Station	06/08/12
Peach Bottom Atomic Power Station, Unit 2	08/08/13
Indian Point Nuclear Generating, Unit 2	09/28/13
Three Mile Island Station, Unit 1	04/19/14
Peach Bottom Atomic Power Station, Unit 3	07/02/14
Calvert Cliffs Nuclear Power Plant, Unit 1	07/31/14
James A. FitzPatrick Nuclear Power Plant	10/17/14
Millstone Power Station, Unit 2	07/31/15
Indian Point Nuclear Generating, Unit 3	12/12/15
Beaver Valley Power Station, Unit 1	01/29/16
Calvert Cliffs Nuclear Power Plant, Unit 2	08/13/16
Salem Nuclear Generating Station, Unit 1	08/13/16
Salem Nuclear Generating Station, Unit 2	04/18/20
Susquehanna Steam Electric Station, Unit 1	07/17/22
Susquehanna Steam Electric Station, Unit 2	03/23/24
Limerick Generating Station, Unit 1	10/26/24
Millstone Power Station, Unit 3	11/25/25
Hope Creek Nuclear Generating Station	04/11/26
Nine Mile Point Nuclear Station, Unit 2	10/31/26
Beaver Valley Power Station, Unit 2	05/27/27
Limerick Generating Station, Unit 2	06/22/29
Seabrook Station	03/15/30

Attachment 1.2

Region II Plants — Original Operating License Expiration Dates

Plant Name	Expiration Date
H. B. Robinson Steam Electric Plant	07/31/10
Surry Power Station, Unit 1	05/25/12
Turkey Point Nuclear Plant, Unit 3	07/19/12
Surry Power Station, Unit 2	01/29/13
Oconee Nuclear Station, Unit 1	02/06/13
Turkey Point Nuclear Plant, Unit 4	04/10/13
Oconee Nuclear Station, Unit 2	10/06/13
Browns Ferry Nuclear Plant, Unit 1	12/20/13
Browns Ferry Nuclear Plant, Unit 2	06/28/14
Oconee Nuclear Station, Unit 3	07/19/14
Edwin I. Hatch Nuclear Plant, Unit 1	08/06/14
Brunswick Steam Electric Plant, Unit 2	12/27/14
St. Lucie Nuclear Plant, Unit 1	03/01/16
Browns Ferry Nuclear Plant, Unit 3	07/02/16
Brunswick Steam Electric Plant, Unit 1	09/08/16
Crystal River, Unit 3	12/03/16
Joseph M. Farley Nuclear Plant, Unit 1	06/25/17
North Anna Power Station, Unit 1	04/01/18
Edwin I. Hatch Nuclear Plant, Unit 2	06/13/18
North Anna Power Station, Unit 2	08/21/20
Sequoyah Nuclear Plant, Unit 1	09/17/20
Joseph M. Farley Nuclear Plant, Unit 2	03/31/21
McGuire Nuclear Station, Unit 1	06/12/21
Sequoyah Nuclear Plant, Unit 2	09/15/21
Virgil C. Summer Nuclear Station	08/06/22
McGuire Nuclear Station, Unit 2	03/03/23
St. Lucie Nuclear Plant, Unit 2	04/06/23
Catawba Nuclear Station, Unit 1	12/06/24
Catawba Nuclear Station, Unit 2	02/24/26
Shearon Harris Nuclear Power Plant	10/24/26
Vogtle Electric Generating Station, Unit 1	01/16/27
Vogtle Electric Generating Station, Unit 2	02/09/29
Watts Bar Nuclear Plant	11/09/35

Attachment 1.3

Region III Plants — Original Operating License Expiration Dates

Plant Name	Expiration Date
Dresden Nuclear Power Station, Unit 2	12/22/09
Monticello Nuclear Generating Plant	09/08/10
Point Beach Nuclear Plant, Unit 1	10/05/10
Dresden Nuclear Power Station, Unit 3	01/12/11
Palisades Nuclear Power Plant	03/24/11
Quad Cities Nuclear Power Station, Unit 1	12/14/12
Quad Cities Nuclear Power Station, Unit 2	12/14/12
Point Beach Nuclear Plant, Unit 2	03/08/13
Prairie Island Nuclear Generating Plant, Unit 1	08/09/13
Kewaunee Power Station	12/21/13
Duane Arnold Energy Center	02/21/14
D. C. Cook Nuclear Power Plant, Unit 1	10/25/14
Prairie Island Nuclear Generating Plant, Unit 2	10/29/14
Davis-Besse Nuclear Power Station	04/22/17
D. C. Cook Nuclear Power Plant, Unit 2	12/23/17
LaSalle County Station, Unit 1	04/17/22
LaSalle County Station, Unit 2	12/16/23
Byron Station, Unit 1	10/31/24
Fermi Power Plant, Unit 2	03/20/25
Perry Nuclear Power Plant	03/18/26
Clinton Power Station	09/29/26
Braidwood Nuclear Power Plant, Unit 1	10/17/26
Byron Station, Unit 2	11/06/26
Braidwood Nuclear Power Plant, Unit 2	12/18/27

Attachment 1.4

Region IV Plants — Original Operating License Expiration Dates

Plant Name	Expiration Date
Fort Calhoun Station	08/09/13
Cooper Nuclear Station	01/18/14
Arkansas Nuclear One, Unit 1	05/20/14
Arkansas Nuclear One, Unit 2	07/17/18
San Onofre Nuclear Generating Station, Unit 2	02/16/22
San Onofre Nuclear Generating Station, Unit 3	11/15/22
Columbia Generating Station	12/20/23
Callaway Plant	10/18/24
Grand Gulf Nuclear Station	11/01/24
Diablo Canyon Power Plant, Unit 1	11/02/24
Waterford Steam Electric Station, Unit 3	12/18/24
Wolf Creek Generating Station	03/11/25
Palo Verde Nuclear Station, Unit 1	06/01/25
Diablo Canyon Power Plant, Unit 2	08/26/25
River Bend Station	08/29/25
Palo Verde Nuclear Station, Unit 2	04/24/26
South Texas Project Electric Generating Station, Unit 1	08/20/27
Palo Verde Nuclear Station, Unit 3	11/25/27
South Texas Project Electric Generating Station, Unit 2	12/15/28
Comanche Peak Steam Electric Station, Unit 1	02/08/30
Comanche Peak Steam Electric Station, Unit 2	02/02/33

ATTACHMENT 2

LICENSE CONDITIONS, COMMITMENTS, AND TLAAs
FOR POST-RENEWAL INSPECTIONS

The license conditions can be found in the Introduction and General Discussion section of the Safety Evaluation Report (SER). The license renewal commitments can be found appended to the SER, with the exception of four plants as described below. Time-limited aging analyses are those described in Section 4.0 of the SER and are those licensee calculations and analyses that, in part, involve conclusions or provide the basis for conclusions related to the capability of SSCs to perform its intended functions as delineated in 10 CFR 54.21 54.4(b).

(1) License Conditions – License conditions are normally listed at the end of Section 1, Introduction and General Discussion, of the SER. There are two generic conditions:

a. The licensee is required to include the UFSAR supplements required by 10 CFR 54.21(d) in the next UFSAR 10 CFR 50.71(e) update following the issuance of the renewed license.

b. The activities identified in the UFSAR supplements are required to be completed in accordance with the schedule as appended to the safety evaluation report as discussed below.

In addition to the above two conditions, there are others that might be required, depending upon the plant specific's material aging, degradation, and/or operating issues that were evaluated at the time of the staff review.

(2) Commitments – The list of commitments can be found in the following locations:

Arkansas Nuclear One; Edwin I. Hatch Nuclear Power Plant; Oconee Nuclear Station and Turkey Point Nuclear Plant	SER NUREG body[1]
Calvert Cliffs Nuclear Power Plant	SER NUREG Appendix E
Catawba, McGuire, North Anna, Peach Bottom, St. Lucie, Surry	SER NUREG Appendix D
Fort Calhoun Station and all renewed licenses since January 2004	SER NUREG Appendix A

[1] The commitments for these four plants have been compiled and can be found in ADAMS ML070640041

(3) Approved Renewed Operating License (ROL)` – The following table provides a list of those nuclear power plants which have had renewed operating licenses approved. This table will be revised, as necessary, but may not be current. Future approved ROL plants and related SER NUREG information can be found on ADAMS Accession No. ML070850037, or the NRC external website at the following link: http://www.nrc.gov/reactors/operating/licensing/renewal/applications.html.

The List of Approved Renewed Operating Licenses (ML070850037) will be updated annually by NRR/DLR.

Table 2-1

List of Plants With Approved Renewed Operating Licenses (AROLs)
(See ML070850037 for later list of AROLs)

Site With Approved Renewed OLs	Unit	Line 1 Expiration of Initial License Line 2 ROL SER/NUREG Issued Date Line 3 And Related ADAMS ML# Nos	71002 IR#
Arkansas Nuclear One	Unit 1	05/20/2014 NUREG-1743 Issued 04/2001 ML011640099, ML011640177, ML011640217	00-17 01-03 01-02
	Unit 2	07/17/2018 NUREG-1828 Issued 06/2005 ML051730233	04-06 04-07 05-12
Browns Ferry	Unit 1	12/20/2013 NUREG-1843 Issued 01/2006, 04/2006 (Supp) ML060120453, ML061220272(Supp)	04-12 05-03 05-13
	Unit 2	06/28/2014 NUREG-1843 Issued 01/2006, 04/2006 (Supp) ML060120453, ML061220272(Supp)	04-12 05-03 05-13
	Unit 3	07/02/2016 NUREG-1843 Issued 01/2006, 04/2006 (Supp) ML060120453, ML061220272(Supp)	04-12 05-03 05-13
Brunswick	Unit 1	09/08/2016 NUREG-1856 Issued 06/2006 ML061730123, ML061730129	05-08
	Unit 2	12/27/2014 NUREG-1856 Issued 06/2006 ML061730123, ML061730129	05-08
Calvert Cliffs	Unit 1	07/31/2014 NUREG-1705 Issued 12/1999 ML063620322	99-02 99-04 99-12
	Unit 2	08/13/2016 NUREG-1705 Issued 12/1999 ML063620322	99-02 99-04 99-12
Catawba	Unit 1	12/06/2024 NUREG-1772 Issued 03/2003 (Appendix D) ML030850251	02-05 02-06

	Unit 2	02/24/2026 NUREG-1772 Issued 03/2003 (Appendix D) ML030850251	02-05 02-06
D. C. Cook	Unit 1	10/25/2014 NUREG-1831 Issued 05/2005 ML052230442	04-03 04-13
	Unit 2	12/23/2017 NUREG-1831 Issued 05/2005 ML052230442	04-03 04-13
Dresden	Unit 2	12/22/2009 NUREG-1796 Issued 10/2004 ML042050507	03-04 03-10 04-05 04-07
	Unit 3	01/12/2011 NUREG-1796 Issued 10/2004 ML042050507	03-04 03-10 04-05 04-07
Fort Calhoun		08/09/2013 NUREG-1782 Issued 07/2003 ML032481209	02-07 03-03
Ginna		09/18/2009 NUREG-1786 Issued 05/2004 ML040640687	03-08 03-10
Hatch	Unit 1	08/06/2014 NUREG-1803 Issued 10/2001 ML012820121	00-09 00-10
	Unit 2	06/13/2018 NUREG-1803 Issued 10/2001 ML012820121	00-09 00-10
Joseph M. Farley	Unit 1	06/25/2017 NUREG-1825 Issued 03/2005 ML050630571	04-09 05-11
	Unit 2	03/21/2021 NUREG-1825 Issued 03/2005 ML050630571	04-09 05-11
McGuire	Unit 1	06/12/2021 NUREG-1772 Issued 03/2003 (Appendix D) ML030850251	02-05 02-06

	Unit 2	03/03/2023 NUREG-1772 Issued 03/2003 (Appendix D) ML030850251	02-05 02-06
Millstone	Unit 2	07/31/2015 NUREG-1838 Issued 08/2005 ML053270483 (Vol. 1), ML053290180 (Vol. 2)	04-09 04-10
	Unit 3	11/25/2025 NUREG-1838 Issued 08/2005 ML053270483 (Vol. 1), ML053290180 (Vol. 2)	04-09 04-10
Monticello		09/08/2010 NUREG-1865 Issued 10/2006 ML063050414	06-06
Nine Mile Point	Unit 1	08/22/2009 NUREG-1900 Issued 09/2006 ML061460313	05-11
	Unit 2	10/31/2026 NUREG-1900 Issued 09/2006 ML061460313	05-11
North Anna	Unit 1	04/01/2018 NUREG-1766 Issued 12/2002 (Appendix D) ML030160853, ML030160804, ML030160825, ML030160848	02-06 02-09
	Unit 2	08/21/2020 NUREG-1766 Issued 12/2002 (Appendix D) ML030160853, ML030160804, ML030160825, ML030160848	02-06 02-09
Oconee	Unit 1	02/06/2013 NUREG-1723 Issued 03/2000 ML003695154	99-11 99-12 00-03
	Unit 2	10/06/2013 NUREG-1723 Issued 03/2000 ML003695154	99-11 99-12 00-03
	Unit 3	07/19/2014 NUREG-1723 Issued 03/2000 ML003695154	99-11 99-12 00-03
Palisades (Note 5)		03/24/2011 NUREG-1871 Issued 01/2007 ML070600578	05-09

Peach Bottom	Unit 2	08/08/2013 NUREG-1769 Issued 03/2003 (Appendix D) ML030300673	02-09 02-10 02-12
	Unit 3	07/02/2014 NUREG-1769 Issued 03/2003 (Appendix D) ML030300673	02-09 02-10 02-12
Point Beach	Unit 1	10/05/2010 NUREG-1839 Issued 12/2005 ML053420134, ML053420137	05-05 05-15
	Unit 2	03/08/2013 NUREG-1839 Issued 12/2005 ML053420134, ML053420137	05-05 05-15
Quad Cities	Unit 1	12/14/2012 NUREG-1796 Issued 10/2004 ML042050507	03-04 03-14 04-03 04-06
	Unit 2	12/14/2012 NUREG-1796 Issued 10/2004 ML042050507	03-04 03-14 04-03 04-06
Robinson	Unit 2	07/31/2010 NUREG-1785 Issued 03/2004 ML040200981	03-08 03-09 03-11
St. Lucie	Unit 1	03/01/2016 NUREG-1779 Issued 07/2003 (Appendix D) ML031890043	02-07 03-03
	Unit 2	04/06/2023 NUREG-1779 Issued 07/2003 (Appendix D) ML031890043	02-07 03-03
Summer		08/06/2022 NUREG-1787 Issued 03/2004 ML040300170	03-07 03-08 03-09
Surry	Unit 1	05/25/2012 NUREG-1766 Issued 12/2002 (Appendix D) ML030160853	02-06 02-09
	Unit 2	01/29/2013 NUREG-1766 Issued 12/2002 (Appendix D) ML030160853	02-06 02-09

Turkey Point	Unit 3	07/19/2012 NUREG-1759 Issued 04/2002 NUREG-1759, Supp. 1, Issued 05/2002 ML021280496, ML021280532, ML021560094	01-09 01-11
	Unit 4	04/10/2013 NUREG-1759 Issued 04/2002 NUREG-1759, Supp. 1, Issued 05/2002 ML021280496, ML021280532, ML021560094	01-09 01-11

ATTACHMENT 3

Revision History For 71003

Commitment Tracking Number	Issue Date	Description of Change	Training Needed	Training Completion Date	Comment Resolution Accession Number
N/A	02/15/08 08-008	Revision history reviewed for the last four years. IP 71003 has been revised to address the concern that the previous IP as written was too broad and that it did not focus on the needed inspection activities.	N/A	N/A	N/A
N/A	10/31/08 CN 08-031	Attachment1- Expiration Dates of Original Licenses has been revised to address incorrect dates for the following plants: Indian Point Nuclear Generating Unit 3, Seabrook Station, Virgil C. Summer Nuclear Station, McGuire Nuclear Station Unit 2, Duane Arnold Energy Center, Diablo Canyon Power Plant Units 1 and 2, Palo Verde Nuclear Station Units 1, 2 and 3.	N/A	N/A	N/A

Entergy New Contention NYS-38/RK-TC-5
Attachment 5

UNITED STATES
NUCLEAR REGULATORY COMMISSION
ADVISORY COMMITTEE ON REACTOR SAFEGUARDS
WASHINGTON, DC 20555 - 0001

January 7, 2011

The Honorable Gregory B. Jaczko
Chairman
U.S. Nuclear Regulatory Commission
Washington, DC 20555-0001

SUBJECT: REPORT ON THE SAFETY ASPECTS OF THE LICENSE RENEWAL APPLICATION FOR THE KEWAUNEE POWER STATION

During the 578th meeting of the Advisory Committee on Reactor Safeguards, December 2-4, 2010, we completed our review of the license renewal application for the Kewaunee Power Station (KPS) and the Safety Evaluation Report (SER) prepared by the NRC staff. Our Plant License Renewal Subcommittee also reviewed this matter during its meeting on August 18, 2010. During these reviews, we had the benefit of discussions with representatives of the NRC staff and the applicant, Dominion Energy Kewaunee, Inc. (DEK). We also had the benefit of the documents referenced. This report fulfills the requirements of 10 CFR 54.25 that the ACRS review and report on all license renewal applications.

CONCLUSION AND RECOMMENDATION

1. The programs established and committed to by the applicant to manage age-related degradation provide reasonable assurance that KPS can be operated in accordance with its licensing basis for the period of extended operation without undue risk to the health and safety of the public.

2. The application for the renewal of the operating license of KPS should be approved.

BACKGROUND AND DISCUSSION

KPS is a 2-loop pressurized water reactor of Westinghouse design with a dry, ambient containment. KPS operates at a licensed power output of 1,772 megawatt-thermal. DEK requested renewal of the KPS license for 20 years beyond the current license term, which expires on December 21, 2013. In the SER, the staff documented their review of the license renewal application and other information submitted by the applicant or obtained during three staff audits and a two-week inspection conducted at the plant site. The staff reviewed the completeness of the applicant's identification of structures, systems and components (SSCs) that are within the scope of license renewal; the integrated plant assessment process; the applicant's identification of the plausible aging mechanisms associated with passive, long-lived components; the adequacy of the applicant's Aging Management Programs (AMPs); and the identification and assessment of time-limited aging analyses (TLAAs) requiring review.

The applicant identified the SSCs that fall within the scope of license renewal and performed an aging management review for these SSCs. The applicant will implement 34 AMPs for license renewal. Thirteen AMPs are consistent with the guidance in the Generic Aging Lessons Learned (GALL) Report, seven are consistent with exceptions, eight are consistent with enhancements, five are consistent with both enhancements and exceptions, and one is plant-specific. We reviewed the plant-specific program and the AMP exceptions to the GALL Report, and we agree with the staff that they are acceptable.

The applicant identified the systems and components requiring TLAAs and reevaluated them for the period of extended operation. The staff concluded that the applicant has provided an acceptable list of TLAAs, as defined in 10 CFR 54.3. Furthermore, the staff concluded that in all cases the applicant has met the requirements of the License Renewal Rule by demonstrating that the TLAAs will remain valid for the period of extended operation, or the TLAAs have been projected to the end of the period of extended operation, or the aging effects will be adequately managed for the period of extended operation. We concur with the staff conclusion that the TLAAs have been properly identified and that the required criteria will be met for the period of extended operation.

The staff conducted three license renewal audits and one inspection at KPS. The audits verified the appropriateness of the aging management review, scoping and screening methodology, and associated AMPs. The inspection examined the scoping and screening of non-safety related SSCs and verified the adequacy of the guidance, documentation, and implementation of selected AMPs. The audit and inspection teams also performed independent examinations of KPS condition reports to confirm that plant-specific operating experience has been adequately addressed during the AMP development and implementation processes. Based on the audits and inspections, the staff concluded in the SER that the proposed activities will adequately manage the aging of SSCs identified in the application and that the intended functions of these SSCs will be maintained during the period of extended operation. We agree with this conclusion.

KPS steam generators have divider plates fabricated from Alloy 600. DEK credits its Primary Water Chemistry Program (PWCP) to manage cracking due to primary water stress corrosion cracking (PWSCC) for Alloy 600 steam generator divider plates exposed to reactor coolant. Significant cracking due to PWSCC has been identified in some European steam generator divider plates, even with proper primary water chemistry.

The staff noted that the PWCP alone may not be effective in managing the aging effect of cracking due to PWSCC divider plates. In order to address the staff concerns, the applicant has committed to participate in ongoing industry efforts related to the divider plate cracking issue. Recognizing that the industry resolution is still under development, the applicant will assess the condition of the divider plate assembly in each steam generator by inspection during the period of extended operation, in a time period consistent with the detection of potential PWSCC cracks, and with appropriate examination techniques. We agree with the staff that the applicant has demonstrated that the effects of aging for these components will be adequately managed.

The staff is concerned that for Alloy 600 tubesheet cladding, autogenous welds may not have sufficient PWSCC resistance, even when tubes are made of Alloy 690. The applicant has committed to developing a plan prior to the period of extended operation, to exercise one of two options: 1) Perform an analytical evaluation of the tube-tubesheet region to establish the technical basis for this boundary being maintained even if cracked, and to demonstrate that the weld is not needed for reactor coolant pressure boundary integrity; or 2) Perform a one-time inspection of a representative number of welds in each steam generator. If cracking is identified, cracks will be evaluated or repaired and aging management inspections will be performed for the remaining life of the steam generators. We agree with the staff that this plan should be effective in managing this aging issue.

The applicant has chosen to address environmentally assisted fatigue by demonstrating that the cumulative usage factor (CUF) at the most sensitive locations will remain below 1.0 throughout the period of extended operation, considering both mechanical and environmental effects. Analyses were performed by the applicant. These analyses showed that the CUF at all analyzed locations will remain below 1.0 throughout the period of extended operation. However, the staff challenged the methodology used by the applicant because this methodology does not consider the full stress state on the component. At the request of the staff, the applicant performed additional analyses. These analyses confirmed that the CUF will not exceed 1.0 during the period of extended operation. The applicant also restricted consideration of environmental effects to those locations identified in NUREG/CR-6260. The staff requested that the applicant review its design to confirm that these are the most limiting locations in its plant. The applicant agreed with this request. We concur with this process.

Following issuance of the SER, the applicant submitted commitments that expand the scope and means to detect aging effects in several license renewal programs. The most significant are those summarized below.

The staff has identified industry operating experience which indicates that power cables energized to 480V and higher can experience failures where extended exposure to moisture is a contributing factor. The Inaccessible Medium Voltage Cable Program in Revision 1 to the GALL Report does not recommend testing for inaccessible cables energized to less than 2kV and does not require testing of inaccessible cables that are not normally energized. Although KPS has not experienced any 480V to 35kV power cable failures due to aging, DEK has addressed the staff's concerns by expanding the scope of the Medium Voltage Power Cable Program to include all inaccessible 480V to 2kV power cables, energized and not. This expanded scope of cable monitoring is consistent with the draft Final Revision 2 of the GALL Report we recently reviewed.

The staff has concluded that external visual inspections do not provide adequate assurance that cracking is not present at the internal radius of socket welds in Class 1 small bore piping systems. There are currently no approved industry standard methods or qualified techniques to

perform volumetric examinations of these welds. The KPS operating experience indicates that cracking has not occurred in any small bore socket welds. Nevertheless, in addition to visual inspections, DEK will perform volumetric examinations of ten Class 1 socket welds for the period of extended operation. If no industry demonstrated technique is available at the time of inspection, the applicant will perform destructive examinations of at least five socket welds in lieu of volumetric examinations. These commitments provide reasonable assurance that this issue will be adequately addressed.

The staff has noted a number of recent industry events involving leakage from buried and underground piping and tanks within the scope of license renewal. KPS has never experienced a piping failure of in-scope piping; but the circulating water, fire protection, and diesel fuel oil systems have a significant amount of buried piping. Buried steel piping is coated, and recent inspections of excavated fire protection and diesel generator fuel oil piping demonstrate that coatings are in very good condition, with appropriate backfill. The applicant has committed to continue to periodically inspect components in a vault below grade. KPS will maintain availability of cathodic protection of the buried portions of the circulating water system and 400 feet of buried fuel oil piping at least 90 percent of the time. National Association of Corrosion Engineers (NACE) surveys of cathodic protection will be conducted during the period of extended operation. Visual inspections will be performed on portions of all buried piping and one of the three fuel oil storage tanks within each 10 year period starting 10 years prior to the period of extended operation. The staff has concluded that, with these enhancements, the proposed program will adequately monitor and manage the aging of buried piping and tanks. We agree with this conclusion.

We agree with the staff that there are no issues related to the matters described in 10 CFR 54.29(a)(1) and (a)(2) that preclude renewal of the operating license for KPS. The programs established and committed to by DEK provide reasonable assurance that KPS can be operated in accordance with its current licensing basis for the period of extended operation without undue risk to the health and safety of the public. The DEK application for renewal of the operating license for KPS should be approved.

Sincerely,

/RA/

Said Abdel-Khalik
Chairman

References:

1. U.S. Nuclear Regulatory Commission, "Safety Evaluation Report Related to the License Renewal of Kewaunee Power Station," November 2010 (ML103090024)

2. Letter from David A. Christian, dated August 12, 2008, "Dominion Energy Kewaunee, Inc. (DEK) Kewaunee Power Station Application for Renewed Operating License" (ML082341020)

3. Letter from Ann Marie Stone dated November 12, 2009, "Kewaunee Power Station - NRC License Renewal Scoping, Screening, and Aging Management Inspection Report 05000305/2009007" (ML093160727)

4. Letter from Samuel Hernandez dated August 12, 2009, "AMP Audit Report Regarding the Kewaunee Power Station License Renewal Application" (ML091900449)

5. Letter from Samuel Hernandez dated December 14, 2009, "Work Control Process Aging Management Program Audit Report Regarding the Kewaunee Power Station License Renewal Application" (ML093260003)

6. Letter from Samuel Hernandez dated July 13, 2009, "Scoping and Screening Audit Report Regarding the Kewaunee Power Station License Renewal Application" (ML091900081)

7. Letter from J. Alan Price dated October 20, 2010, "Dominion Energy Kewaunee, Inc. Kewaunee Power Station Supplemental Information for the Review of the Kewaunee Power Station License Renewal Application" (ML102930573)

8. Letter from J. Alan Price dated November 9, 2010, "Dominion Energy Kewaunee, Inc. Kewaunee Power Station Supplemental Information for the Review of the Kewaunee Power Station License Renewal Application" (ML103130472)

9. Letter from J. Alan Price dated November 23, 2010, "Dominion Energy Kewaunee, Inc. Kewaunee Power Station Supplemental Information for the Review of the Kewaunee Power Station License Renewal Application" (ML103270580)

10. Memorandum from B. Pham dated December 17, 2010, “Advisory Committee Reactor Safeguards Review of the Kewaunee Power Station License Renewal Application – Safety Evaluation Report (ML103500555)

References:

1. U.S. Nuclear Regulatory Commission, "Safety Evaluation Report Related to the License Renewal of Kewaunee Power Station," November 2010 (ML103090024)

2. Letter from David A. Christian, dated August 12, 2008, "Dominion Energy Kewaunee, Inc. (DEK) Kewaunee Power Station Application for Renewed Operating License" (ML082341020)

3. Letter from Ann Marie Stone dated November 12, 2009, "Kewaunee Power Station - NRC License Renewal Scoping, Screening, and Aging Management Inspection Report 05000305/2009007" (ML093160727)

4. Letter from Samuel Hernandez dated August 12, 2009, "AMP Audit Report Regarding the Kewaunee Power Station License Renewal Application" (ML091900449)

5. Letter from Samuel Hernandez dated December 14, 2009, "Work Control Process Aging Management Program Audit Report Regarding the Kewaunee Power Station License Renewal Application" (ML093260003)

6. Letter from Samuel Hernandez dated July 13, 2009, "Scoping and Screening Audit Report Regarding the Kewaunee Power Station License Renewal Application" (ML091900081)

7. Letter from J. Alan Price dated October 20, 2010, "Dominion Energy Kewaunee, Inc. Kewaunee Power Station Supplemental Information for the Review of the Kewaunee Power Station License Renewal Application" (ML102930573)

8. Letter from J. Alan Price dated November 9, 2010, "Dominion Energy Kewaunee, Inc. Kewaunee Power Station Supplemental Information for the Review of the Kewaunee Power Station License Renewal Application" (ML103130472)

9. Letter from J. Alan Price dated November 23, 2010, "Dominion Energy Kewaunee, Inc. Kewaunee Power Station Supplemental Information for the Review of the Kewaunee Power Station License Renewal Application" (ML103270580)

10. Memorandum from B. Pham dated December 17, 2010, “Advisory Committee Reactor Safeguards Review of the Kewaunee Power Station License Renewal Application – Safety Evaluation Report (ML103500555)

Accession No: ML103410361 **Publicly Available** **Y** **Sensitive** **N**

Viewing Rights: ■ NRC Users or ☐ ACRS Only or ☐ See Restricted distribution

OFFICE	ACRS	SUNSI Review	ACRS	ACRS
NAME	KHoward	KHoward	CSantos	EHackett/JMG for
DATE	01/06/11	01/06/11	01/06/11	01/06/11

OFFICIAL RECORD COPY

Letter to the Honorable Gregory B Jaczko, Chairman, NRC, from Said Abdel-Khalik, Chairman, ACRS, dated January 7, 2011

SUBJECT: REPORT ON THE SAFETY ASPECTS OF THE LICENSE RENEWAL APPLICATION FOR THE KEWAUNEE POWER STATION

Distribution:
ACRS Staff
ACRS Members
B. Champ
A. Bates
S. McKelvin
L. Mike
M. Orr
RidsSECYMailCenter
RidsEDOMailCenter
RidsNMSSOD
RidsNSIROD
RidsFSMEOD
RidsRESOD
RidsOIGMailCenter
RidsOGCMailCenter
RidsOCAAMailCenter
RidsOCAMailCenter
RidsNRROD
RidsNROOD
RidsOPAMail
RidsRGN1MailCenter
RidsRGN2MailCenter
RidsRGN3MailCenter
RidsRGN4MailCenter

Entergy New Contention NYS-38/RK-TC-5
Attachment 6

UNITED STATES
NUCLEAR REGULATORY COMMISSION
OFFICE OF NUCLEAR REACTOR REGULATION
WASHINGTON, DC 20555-0001

July 21, 2011

NRC REGULATORY ISSUE SUMMARY 2011-07
LICENSE RENEWAL SUBMITTAL INFORMATION FOR PRESSURIZED WATER REACTOR INTERNALS AGING MANAGEMENT

ADDRESSEES

All holders of and applicants for a pressurized water power reactor operating license or construction permit under Title 10 of the *Code of Federal Regulations* (10 CFR) Part 50, "Domestic Licensing of Production and Utilization Facilities," except those that have permanently ceased operations and have certified that fuel has been permanently removed from the reactor vessel.

INTENT

The U.S. Nuclear Regulatory Commission (NRC) is issuing this regulatory issue summary (RIS) to inform addressees of updated NRC procedures for license renewal application (LRA) reviews or the review of certain licensee submittals related to commitments made in the process of receiving a renewed license. LRAs for pressurized water reactor (PWR) plants have identified that an aging management program (AMP) is needed to manage the effects of aging for reactor vessel internal (RVI) components that are within the scope of license renewal, in accordance with 10 CFR Part 54, "Requirements for Renewal of Operating Licenses for Nuclear Power Plants." This RIS requires no action or written response on the part of addressees. This RIS also provides information to licensees with respect to how to meet their existing license renewal commitments related to reactor vessel internals aging management programs, and on acceptable changes to existing license renewal commitments in order to account for the recent issue of the staff's final Safety Evaluation (SE) of MRP-227, Rev.0, and the forthcoming issue of the approved version of MRP-227.

The purpose of this RIS is to facilitate a predictable and consistent method for reviewing the AMPs of commercial PWR LRAs and the AMPs and inspection plans for PWR plants that have received renewed operating licenses. This RIS does not transmit or imply any new or changed requirements or staff positions. Although no specific action or written response is required, the information contained in this RIS will enable licensees to plan effectively for anticipated LRAs and inspection activities.

This RIS is part of the NRC's ongoing oversight of license renewal and is unrelated to the agency's response to the March 11, 2011, earthquake in Japan.

ML111990086

BACKGROUND INFORMATION

In 10 CFR Part 54, the NRC addresses the requirements for plant LRAs. The regulation in 10 CFR 54.21, "Contents of Application—Technical Information," requires that each LRA contain an integrated plant assessment and an evaluation of time-limited aging analyses. The integrated plant assessment must identify and list those structures and components subject to an aging management review (AMR) and must demonstrate that the effects of aging (such as cracking, loss of material, loss of fracture toughness, dimensional changes, and loss of preload) will be adequately managed so that the intended functions of the structures and components will be maintained consistent with the current licensing basis for the period of extended operation as required by 10 CFR 54.29(a). Structures and components subject to an AMR shall encompass those structures and components (1) that perform an intended function, as described in 10 CFR 54.4, "Scope," without moving parts or without a change in configuration or properties, and (2) that are not subject to replacement based on a qualified life or specified time period. These structures and components are referred to as "passive" and "long-lived," respectively.

On April 26, 2001, the NRC issued NUREG-1801, "Generic Aging Lessons Learned (GALL) Report," (Agencywide Documents Access and Management System (ADAMS) Accession Nos. ML011080185 and ML011080393). On September 30, 2005, the NRC issued NUREG-1801, Revision 1, "Generic Aging Lessons Learned (GALL) Report," (ADAMS Accession Nos. ML052770419 and ML052780376). On December 31, 2010, the NRC issued NUREG-1801, Revision 2, "Generic Aging Lessons Learned (GALL) Report," (ADAMS Accession No. ML103490041). The GALL Report provides generic AMRs of systems, structures, and components that are within the scope of license renewal, as described in 10 CFR 54.4, and provides generic AMPs that the staff has found acceptable to manage the effects of aging identified in the AMR. As described in NUREG-1800, Revision 2, "Standard Review Plan for Review of License Renewal Applications for Nuclear Power Plants" (ADAMS Accession No. ML103490036) (LR-SRP), treatment of the GALL Report as an approved topical report improves the efficiency of the license renewal process.

An applicant may reference in its LRA that its AMPs are consistent with those in the GALL Report. If an applicant takes credit for an AMP in the GALL Report, it is incumbent on the applicant to ensure that the conditions and operating experience at the plant are bounded by those for which the AMP in the GALL Report was evaluated and found acceptable. In such a case, the NRC staff's review of the AMP is limited to verifying that the applicant's AMP is consistent with that provided in the GALL Report, including the conditions and operating experience provided in the GALL Report.

If the applicant's conditions and operating experience are not bounded by those of the GALL Report AMP, it is incumbent on the applicant to address the additional effects of aging that may apply to the applicant's facility and supplement the GALL Report AMR line items and AMPs as necessary. The staff's review then addresses the acceptability of the AMR and the AMPs to be used by the applicant.

Revision 1 of the GALL Report provides AMP XI.M16, "PWR Vessel Internals," which refers to the aging management guidance of the AMR line items for RVI components. Within the context

of this RIS, NRC license renewals, the SE for MRP-227 and other NRC licensing actions, "RVI" refers to reactor vessel internals. In recognition that the industry was conducting programs to investigate aging of RVI components and to develop aging management guidelines for RVI components, the AMR line items for RVI components state that:

> No further aging management review is necessary if the applicant provides a commitment in the FSAR [final safety analysis report] supplement to (1) participate in the industry programs for investigating and managing aging effects on reactor internals; (2) evaluate and implement the results of the industry programs as applicable to the reactor internals; and (3) upon completion of these programs, but not less than 24 months before entering the period of extended operation, submit an inspection plan for reactor internals to the NRC for review and approval.

Each licensee that made a commitment to conform to GALL AMP XI.M16, or an equivalent commitment under the 2001 GALL Report, also made a commitment in its FSAR supplement that it will implement a plant-specific AMP for its RVI components based on the industry-developed guidance.

On January 12, 2009, the Electric Power Research Institute (EPRI) submitted for NRC staff review and approval the Materials Reliability Program (MRP) Report 1016596 (MRP-227), Revision 0, "Pressurized Water Reactor Internals Inspection and Evaluation Guidelines" (ADAMS Accession No. ML090160204). MRP-227 is the industry-developed guidance that licensees will use to develop their plant-specific AMP for RVI components. MRP-227, Revision 0 contains a discussion of the technical basis for the development of plant-specific AMPs for RVI components in PWR vessels. MRP-227, Revision 0 also provides inspection and evaluation guidelines for PWR licensees to use in their plant-specific AMPs. Once approved by the NRC, MRP-227 will provide the basis for renewed license holders to develop plant-specific inspection plans to manage aging effects on RVI components, as described by their FSAR commitment.

The scope of components considered for inspection under the guidance of MRP-227, Revision 0 includes core support structures (typically denoted as Examination Category B-N-3 by Section XI of the American Society of Mechanical Engineers Boiler and Pressure Vessel Code), and those RVI components that serve an intended safety function consistent with the criteria in 10 CFR 54.4(a)(1). The scope of the program does not include consumable items such as fuel assemblies, reactivity control assemblies, and nuclear instrumentation because these components are not subject to an AMR, as defined in 10 CFR 54.21(a)(1).

On June 22, 2011, the NRC issued its final SE regarding topical report MRP-227, Revision 0 (ADAMS Accession No. ML111600498), which license renewal applicants and renewed license holders will use to develop their plant-specific AMPs for RVI components. This SE contains specific conditions on the use of the topical report and applicant/licensee action items that must be addressed by those utilizing the topical report as the basis for a submittal to the NRC. The NRC approved version of the topical report is designated as MRP-227-A.

Subsequent to the submittal of MRP-227 and prior to the issuance of the SE on MRP-227, GALL Report, Revision 2 was issued, providing new AMR line items and aging management

guidance in AMP XI.M16A, "PWR Vessel Internals." This AMP was based on staff expectations for the guidance to be provided in MRP-227-A. After December 21, 2010, any licensees submitting an LRA were encouraged to reference and utilize GALL Report, Revision 2 to manage the effects of aging identified in the AMR. With the issuance of the SE for MRP-227, the NRC will issue License Renewal Interim Staff Guidance (LR-ISG) to revise the GALL Report AMR line items and AMP XI.M.16A for consistency with the SE and to reflect acceptability of the MRP-227-A report for use in license renewal applications.

SUMMARY OF ISSUE

The NRC granted renewed licenses to some owners of PWR units based on a commitment in the FSAR supplement to, in part, submit an inspection plan for RVI components to the NRC for review and approval. This plan was to be based on aging management guidelines for RVI components developed by the industry and approved by the NRC. This commitment in the FSAR would require those licensees to review and update their aging management inspection plans for RVI components based on the guidance provided in MRP-227-A.

With the issuance of the staff SE for MRP-227, the NRC has updated internal guidance on implementation of this RVI component AMP guidance relative to license renewal for PWR plants on a plant-specific basis, as indicated in the following table for the plants in Categories "A" through "D." The different plant categories reflect the licensee's status relative to license renewal approval (i.e., licensee has received a renewed license, has submitted an LRA, or has not), and, for those plants with renewed licenses, whether the licensee has or has not submitted its inspection plan to the NRC for review and approval.

Category "A" facilities address licensees that previously submitted an RVI inspection plan based on the draft Revision 0 of MRP-227. Licensees of Category "A" facilities, those that made a commitment in the FSAR supplement to comply with the industry-developed guidance and choose to withdraw their inspection plans to conform to their commitments, must do so in writing and should include a commitment to resubmit the required information based on MRP-227-A, no later than October 1, 2012. Licensees of Category "A" facilities who propose in their resubmittal to deviate from provisions of MRP-227-A based upon having completed specific inspections, will need to provide a justification for each deviation from the MRP-227-A guidelines. The NRC will evaluate proposed deviations from the MRP-227-A guidelines to ensure that licensee programs will still provide an acceptable approach for managing the effects of aging in RVI components. This will ensure compliance with the commitment in the FSAR supplement.

Licensees of Category "B" facilities that have committed to follow the industry-developed guidance, will be expected to make the submittal of their RVI AMP based on the guidance of MRP-227-A, consistent with their commitment. Licensees of Category "B" facilities who are required by their commitments to submit their RVI inspection plan prior to one year after the issuance of this RIS may modify their commitments to submit their RVI inspection plan no later than October 1, 2012. All other Category "B" facility licensees will be expected to make the submittal of their RVI AMP in accordance with their existing commitments. This will ensure compliance with the commitment in the FSAR supplement.

For those PWR plants that have an LRA currently under review (as addressed in Category "C") with a commitment to follow the industry-developed guidance, the NRC staff expects the applicant to revise the commitment for aging management of PWR vessel internals such that the plant-specific action items identified in the SE for MRP-227 would be submitted to the NRC for review and approval not later than two years after issuance of the renewed license and not later than two years before the plant enters the period of extended operation, whichever comes first. It is expected that Category C licensees will follow the guidance of MRP-227-A, consistent with their commitment.

For those PWR plant licensees that have not submitted their LRAs (as addressed in Category "D") but plan to submit an LRA in the future, the NRC staff encourages these future license renewal applicants to, and anticipates that the applicant will, provide an AMP for vessel internals in their LRA that is consistent with MRP-227-A. As described previously, the NRC will issue an LR-ISG to revise the GALL Report to ensure that GALL AMP XI.M16A, "PWR Vessel Internals," and associated AMR line items are consistent with the SE on MRP-227 and reflect acceptability of the MRP-227-A report for use in license renewal applications. It is expected that all Category D LRAs will meet GALL Revision 2 as updated by the LR-ISG.

If a license renewal applicant confirms that it will implement an AMP consistent with MRP-227-A, Licensee/Applicant Action Item 8 from the NRC staff SE (Section 3.5.1) indicates that the LRA shall include, in part, an AMP that addresses the 10 program elements as defined in AMP XI.M16A, and an inspection plan. The NRC review of an AMP which is consistent with GALL AMP XI.M16A would include those items specifically identified in Section 4.0 of the SE.

Category	Description	NRC Expectations
A	Plants with renewed licenses that have already submitted an AMP/inspection plan based on MRP-227, Revision 0 to comply with an existing commitment.	Licensees may withdraw their current AMP/inspection plan submittals and provide new/revised commitments to resubmit AMPs/inspection plans in accordance with MRP-227-A no later than October 1, 2012. Future submittals should address all information required by MRP-227-A.
B	Plants with renewed licenses that have a commitment to submit an AMP/inspection plan based on MRP-227, but that have not yet been required to do so by their commitment.	Licensees will be expected to submit AMPs/inspection plans in accordance with MRP-227-A, consistent with the timing requirements reflected in their LR commitments. Licensees who would be required by their commitments to make their submittal prior to one year after the issuance of this RIS may modify their commitments to reflect a requirement to submit their AMPs/inspection plans no later than October 1, 2012.

C	Plants that have an LRA currently under review.	Applicants will be expected to revise their commitment for aging management of PWR vessel internals such that the submittal information identified in the SE for MRP-227 would be submitted to the NRC for review and approval not later than two years after issuance of the renewed license and not later than two years before the plant enters the period of extended operation, whichever comes first.
D	Plants that will apply for an LR in the future based on the GALL Report, Revision 2.	Applicants will be expected to submit an AMP for vessel internals that is consistent with MRP-227-A for NRC staff review and approval.

BACKFIT DISCUSSION

This RIS is being issued to inform stakeholders of the implementation of updated internal NRC guidance for staff in performing reviews of LRAs with AMPs. The backfit rule applies to procedures necessary to operate a nuclear power plant. The NRC's regulatory review process is not a licensee procedure required for operating the plant.

This RIS requires no action or written response. The intent is to provide licensees sufficient time to modify their AMPs to be consistent with MRP-227-A. This RIS provides information to licensees regarding (1) updated NRC procedures for LRA reviews or the review of certain licensee submittals related to commitments made in the process of receiving a renewed license and (2) the potential for licensees to modify the original commitment date for the submittal of a RVI AMP for their facilities. The technical position of GALL Rev. 2 has not changed. Compliance with the guidelines specified in MRP-227-A would satisfy a licensee's license renewal commitment. For those applicants following GALL Rev. 1, which provided no definition on the RVI AMP, other than following the industry's future program, this RIS provides clarification as to what an acceptable RVI AMP would be in light of the issuance of the staff SE of MRP-227. Any action on the part of addressees to submit a request for a licensing action or to adhere to the industry guidance contained in the EPRI's MRP-227-A guidance document is strictly voluntary. Any changes to a licensees' AMP/inspection plan to adhere to MRP 227-A, ensures compliance with a license commitment. Therefore, this RIS does not constitute a backfit under 10 CFR 50.109, "Backfitting," and a backfit analysis is not required.

***FEDERAL REGISTER* NOTIFICATION**

This RIS is informational and does not represent a departure from current regulatory requirements. The NRC did not publish a notice of opportunity for public comment on this RIS in the *Federal Register* because the RIS pertains to an administrative aspect of the regulatory process that involves the voluntary use of industry guidance by addressees. However, on

June 13, 2011, the NRC posted a draft version of this RIS on its public website for a 10-day public comment period. Comments were received from the industry's Materials Reliability Program (ADAMS Accession No. ML11188A162) and considered.

CONGRESSIONAL REVIEW ACT

The NRC has determined that this action is not a rule as designated by the Congressional Review Act (5 U.S.C. §§ 801–808) and, therefore, is not subject to the Act.

PAPERWORK REDUCTION ACT STATEMENT

This RIS does not contain new or amended information collection requirements that are subject to the Paperwork Reduction Act of 1995 (44 U.S.C. 3501 et seq.). Existing requirements were approved by the Office of Management and Budget (OMB), approval number 3150-0011 and 3150-0155.

PUBLIC PROTECTION NOTIFICATION

The NRC may not conduct or sponsor, and a person is not required to respond to, a request for information or an information collection requirement unless the requesting document displays a currently valid OMB control number.

CONTACT

Please direct any questions about this matter to the technical contact listed below.

/RA/

Timothy J. McGinty, Director
Division of Policy and Rulemaking
Office of Nuclear Reactor Regulation

Technical Contact: Sheldon D. Stuchell, Senior Project Manager
NRR/DPR/PLPB
(301) 415-1487
E-mail: sheldon.stuchell@nrc.gov

Note: NRC generic communications may be found on the NRC public Web site, http://www.nrc.gov, under NRC Library/Document Collections.

June 13, 2011, the NRC posted a draft version of this RIS on its public website for a 10-day public comment period. Comments were received from the industry's Materials Reliability Program (ADAMS Accession No. ML11188A162) and considered.

CONGRESSIONAL REVIEW ACT

The NRC has determined that this action is not a rule as designated by the Congressional Review Act (5 U.S.C. §§ 801–808) and, therefore, is not subject to the Act.

PAPERWORK REDUCTION ACT STATEMENT

This RIS does not contain new or amended information collection requirements that are subject to the Paperwork Reduction Act of 1995 (44 U.S.C. 3501 et seq.). Existing requirements were approved by the Office of Management and Budget (OMB), approval number 3150-0011 and 3150-0155.

PUBLIC PROTECTION NOTIFICATION

The NRC may not conduct or sponsor, and a person is not required to respond to, a request for information or an information collection requirement unless the requesting document displays a currently valid OMB control number.

CONTACT

Please direct any questions about this matter to the technical contact listed below.

/RA/
Timothy J. McGinty, Director
Division of Policy and Rulemaking
Office of Nuclear Reactor Regulation

Technical Contact: Sheldon D. Stuchell, Senior Project Manager
NRR/DPR/PLPB
(301) 415-1487
E-mail: sheldon.stuchell@nrc.gov

Note: NRC generic communications may be found on the NRC public Web site, http://www.nrc.gov, under NRC Library/Document Collections.

DISTRIBUTION: MMitchell, NRR MEvans, NRR BHolian, NRR AHiser, NRR
ADAMS Accession Number: ML111990086 ***via e-mail** **TAC ME5988**

OFFICE	NRR/DPR/PLPB/PM	Tech Editor	NRR/DCI/CVIB/BC	NRR/DPR/PLPB/BC	NRR/PMDA
NAME	SStuchell*	JDougherty*	MMitchell*	JJolicoeur	LHill*
DATE	05/18/11	04/08/11	04/22/11	04/22/11	04/25/11
OFFICE	OE	OIS	NRR/DORL/D	NRR/DCI/D	NRR/DLR/D
NAME	NHilton*	TDonnell*	JGiitter*	MEvans (JLubinski for)	BHolian*
DATE	05/16/11	04/28/11	05/16/11	05/04/11	04/29/11
OFFICE	OGC	NRR/DPR/PGCB/LA	NRR/DPR/PGCB/PM	NRR/DPR/PGCB/BC	NRR/DPR/D
NAME	MSmith* (NLO)	CHawes	ARussell	SRosenberg	TMcGinty
DATE	06/02/11	07/18/11	07/18/11	07/19/11	07/21/11

OFFICIAL RECORD COPY

Entergy New Contention NYS-38/RK-TC-5
Attachment 7

Entergy

Entergy Nuclear Northeast
Indian Point Energy Center
450 Broadway, GSB
P.O. Box 249
Buchanan, NY 10511-0249
Tel (914) 788-2055

Fred Dacimo
Vice President
License Renewal

January 22, 2008

Re: Indian Point Units 2 & 3
Docket Nos. 50-247 & 50-286
NL-08-021

U.S. Nuclear Regulatory Commission
ATTN: Document Control Desk
Washington, DC 20555-0001

SUBJECT: Entergy Nuclear Operations Inc.
Indian Point Nuclear Generating Unit Nos. 2 & 3
Docket Nos. 50-247 and 50-286
License Renewal Application Amendment 2

REFERENCES:

1. Entergy Letter dated April 23, 2007, F. R. Dacimo to Document Control Desk, "License Renewal Application" (NL-07-039)
2. Entergy Letter dated April 23, 2007, F. R. Dacimo to Document Control Desk, "License Renewal Application Boundary Drawings" (NL-07-040)
3. Entergy Letter dated April 23, 2007, F. R. Dacimo to Document Control Desk, "License Renewal Application Environmental Report References" (NL-07-041)

Dear Sir or Madam:

In the referenced letters, Entergy Nuclear Operations, Inc. (Entergy) applied for renewal of the Indian Point Energy Center operating licenses for Unit 2 and 3.

Based on discussions during license renewal audits, clarification to the LRA is provided in Attachment 1. This information clarifies the relationship between Commitment 33 regarding environmentally assisted fatigue and the Fatigue Monitoring Program described in LRA Section B.1.12. The Fatigue Monitoring Program includes the actions identified in Commitment 33 to address the evaluation of the effects of environmentally assisted fatigue in accordance with 10 CFR 54.21(c)(1)(iii). The revised Regulatory Commitment List is provided in Attachment 2.

If you have any questions, or require additional information, please contact Mr. Robert Walpole at 914-734-6710.

A128
NRR

I declare under penalty of perjury that the foregoing is true and correct. Executed on 1-22-08.

Sincerely,

Patricia W Conroy for per telecon
Fred R. Dacimo
Vice President
License Renewal

Attachments:

1. Fatigue Monitoring Program Clarification
2. Regulatory Commitment List, Revision 3

cc: Mr. Samuel J. Collins, Regional Administrator, NRC Region I
Mr. Kenneth Chang, NRC Branch Chief, Engineering Review Branch I
Mr. Bo M. Pham, NRC Environmental Project Manager
Mr. John Boska, NRR Senior Project Manager
Mr. Paul Eddy, New York State Department of Public Service
NRC Resident Inspector's Office
Mr. Paul D. Tonko, President, New York State Energy, Research, & Development Authority

ATTACHMENT 1 TO NL-08-021

Fatigue Monitoring Program Clarification

ENTERGY NUCLEAR OPERATIONS, INC.
INDIAN POINT NUCLEAR GENERATING UNIT NOS. 2 & 3
DOCKET NOS. 50-247 AND 50-286

License Renewal Application
Amendment 2

Fatigue Monitoring Program Clarification

LRA and commitment list revisions are provided below. (underline - added, strikethrough – deleted)

LRA Table 4.1-1, List of IP2 TLAA and Resolution, line item titled "Effects of reactor water environment on fatigue life", is revised as follows.

Effects of reactor water environment on fatigue life	~~Analyses remain valid~~ ~~10 CFR 54.21(c)(1)(i)~~ ~~OR~~ Aging effect managed 10 CFR 54.21(c)(1)(iii)	4.3.3

LRA Table 4.1-2, List of IP3 TLAA and Resolution, line item titled "Effects of reactor water environment on fatigue life", is revised as follows.

Effects of reactor water environment on fatigue life	~~Analyses remain valid~~ ~~10 CFR 54.21(c)(1)(i)~~ ~~OR~~ Aging effect managed 10 CFR 54.21(c)(1)(iii)	4.3.3

LRA Section 4.3.3, paragraph 10 is revised as follows.

At least 2 years prior to entering the period of extended operation, for the locations identified in LRA Table 4.3-13 (IP2) and LRA Table 4.3-14 (IP3)~~NUREG/CR-6260 for Westinghouse PWRs of the IPEC vintage~~, under the Fatigue Monitoring Program IPEC will implement one or more of the following.

(1) Consistent with the Fatigue Monitoring Program, Detection of Aging Effects, update the fatigue usage calculations using ~~R~~refined ~~the~~ fatigue analyses to determine valid CUFs less than 1.0 when accounting for the effects of reactor water environment. This includes applying the appropriate F_{en} factors to valid CUFs determined in accordance with one of the following.

For locations in LRA Table 4.3-13 (IP2) and LRA Table 4.3-14 (IP3)~~including NUREG/CR-6260 locations~~, with existing fatigue analysis valid for the period of

extended operation, use the existing CUF~~ to determine the environmentally adjusted CUF~~.

~~More limiting IPEC~~ Additional plant-specific locations with a valid CUF may be ~~added in addition to the NUREG/CR-6260 locations~~evaluated. In particular, the pressurizer lower shell will be reviewed to ensure the surge nozzle remains the limiting component.

Representative CUF values from other plants, adjusted to or enveloping the IPEC plant-specific external loads may be used if demonstrated applicable to IPEC.

An analysis using an NRC-approved version of the ASME code or NRC-approved alternative (e.g., NRC-approved code case) may be performed to determine a valid CUF.

~~(2) Manage the effects of aging due to fatigue at the affected locations by an inspection program that has been reviewed and approved by the NRC (e.g., periodic non-destructive examination of the affected locations at inspection intervals to be determined by a method acceptable to the NRC).~~

(~~3~~2) Consistent with the Fatigue Monitoring Program, Corrective Actions, ~~R~~repair or replace the affected locations before exceeding a CUF of 1.0.

~~Should IPEC select the option to manage the aging effects due to environmental-assisted fatigue during the period of extended operation, details of the aging management program such as scope, qualification, method, and frequency will be submitted to the NRC at least 2 years prior to the period of extended operation.~~

~~Depending on the option chosen, which may vary by component, this TLAA will be projected through the period of extended operation per 10CFR54.21(c)(1)(ii) or t~~The effects of environmentally assisted fatigue will be managed per 10CFR54.21(c)(1)(iii).

LRA Section A.2.1.11, Fatigue Monitoring Program, is revised as follows.

The Fatigue Monitoring Program is an existing program that tracks the number of critical thermal and pressure transients for selected reactor coolant system components. The program ensures the validity of analyses that explicitly analyzed a specified number of fatigue transients by assuring that the actual effective number of transients does not exceed the analyzed number of transients. The program provides for update of the fatigue usage calculations to maintain a CUF of < 1.0 for the period of extended operation. For the locations identified in Section A.2.2.2.3, updated calculations will account for the effects of the reactor water environment. These calculation updates are governed by Entergy's 10 CFR 50 Appendix B Quality Assurance (QA) program and include design input verification and independent reviews ensuring that valid assumptions, transients, cycles, external loadings, analysis methods, and environmental fatigue life correction factors will be used in

the fatigue analyses. The program requires corrective actions including repair or replacement of affected components before fatigue usage calculations determine the CUF exceeds 1.0. Specific corrective actions are implemented in accordance with the IPEC corrective action program. Repair or replacement of the affected component(s), if necessary, will be in accordance with established plant procedures governing repair and replacement activities. These established procedures are governed by Entergy's 10 CFR 50 Appendix B QA program and meet the applicable repair or replacement requirements of the ASME Code Section XI.

LRA Section A.2.2.2.3, Environmental Effects on Fatigue, is revised as follows.

The effects of reactor water environment on fatigue were evaluated for license renewal. Projected cumulative usage factors (CUFs) were calculated for the limiting locations ~~identified in~~ based on NUREG/CR-6260. The identified IP2 locations are those listed in the license renewal application, Table 4.3-13. ~~For the locations with CUFs less than 1.0, the TLAA has been projected through the period of extended operation per 10 CFR 54.21(c)(1)(ii).~~ Several locations may exceed a CUF of 1.0 with consideration of environmental effects during the period of extended operation. The Fatigue Monitoring Program requires that Aat least two years prior to entering the period of extended operation, the site will implement one or more of the following:

(1) Consistent with the Fatigue Monitoring Program, Detection of Aging Effects, update the fatigue usage calculations using ~~R~~refined ~~the~~fatigue analyses to determine valid CUFs less than 1.0 when accounting for the effects of reactor water environment. This includes applying the appropriate F_{en} factors to valid CUFs determined in accordance with one of the following.

For locations~~, including NUREG/CR-6260 locations,~~ with existing fatigue analysis valid for the period of extended operation, use the existing CUF ~~to determine the environmentally adjusted CUF~~.

~~In addition to the NUREG/CR-6260 locations, more limiting~~Additional plant-specific locations with a valid CUF may be evaluated. In particular, the pressurizer lower shell will be reviewed to ensure the surge nozzle remains the limiting component.

Representative CUF values from other plants, adjusted to or enveloping the plant-specific external loads may be used if demonstrated applicable.

An analysis using an NRC-approved version of the ASME code or NRC-approved alternative (e.g., NRC-approved code case) may be performed to determine a valid CUF.

~~(2) Manage the effects of aging due to fatigue at the affected locations by an inspection program that has been reviewed and approved by the NRC (e.g., periodic non-~~

~~destructive examination of the affected locations at inspection intervals to be determined by a method acceptable to the NRC).~~

(~~3~~2) Consistent with the Fatigue Monitoring Program, Corrective Actions, ~~R~~repair or replace the affected locations before exceeding a CUF of 1.0.

~~Should IPEC select the option to manage the aging effects due to environmental-assisted fatigue during the period of extended operation, details of the aging management program such as scope, qualification, method, and frequency will be submitted to the NRC at least 2 years prior to the period of extended operation.~~

LRA Section A.3.1.11, Fatigue Monitoring Program, is revised as follows.

The Fatigue Monitoring Program is an existing program that tracks the number of critical thermal and pressure transients for selected reactor coolant system components. The program ensures the validity of analyses that explicitly analyzed a specified number of fatigue transients by assuring that the actual effective number of transients does not exceed the analyzed number of transients. The program provides for update of the fatigue usage calculations to maintain a CUF of < 1.0 for the period of extended operation. For the locations identified in Section A.3.2.2.3, updated calculations will account for the effects of the reactor water environment. These calculation updates are governed by Entergy's 10 CFR 50 Appendix B Quality Assurance (QA) program and include design input verification and independent reviews ensuring that valid assumptions, transients, cycles, external loadings, analysis methods, and environmental fatigue life correction factors will be used in the fatigue analyses. The program requires corrective actions including repair or replacement of affected components before fatigue usage calculations determine the CUF exceeds 1.0. Specific corrective actions are implemented in accordance with the IPEC corrective action program. Repair or replacement of the affected component(s), if necessary, will be in accordance with established plant procedures governing repair and replacement activities. These established procedures are governed by Entergy's 10 CFR 50 Appendix B QA program and meet the applicable repair or replacement requirements of the ASME Code Section XI.

LRA Section A.3.2.2.3, Environmental Effects on Fatigue, is revised as follows.

The effects of reactor water environment on fatigue were evaluated for license renewal. Projected cumulative usage factors (CUFs) were calculated for the limiting locations ~~identified in~~ based on NUREG/CR-6260. The identified IP3 locations are those listed in the license renewal application, Table 4.3-14. ~~For the locations with CUFs less than 1.0, the TLAA has been projected through the period of extended operation per 10 CFR 54.21(c)(1)(ii).~~ Several locations may exceed a CUF of 1.0 with consideration of environmental effects during the period of extended operation. The Fatigue Monitoring Program requires that ~~A~~at least two years prior to entering the period of extended operation, ~~for the locations identified in NUREG/CR-6260 for Westinghouse PWRs of this vintage,~~ the site will implement one or more of the following:

(1) Consistent with the Fatigue Monitoring Program, Detection of Aging Effects, update the fatigue usage calculation using ~~R~~refined ~~the~~ fatigue analyses to determine valid CUFs less than 1.0 when accounting for the effects of reactor water environment. This includes applying the appropriate F_{en} factors to valid CUFs determined in accordance with one of the following.

For locations~~, including NUREG/CR-6260 locations,~~ with existing fatigue analysis valid for the period of extended operation, use the existing CUF~~ to determine the environmentally adjusted CUF~~.

~~In addition to the NUREG/CR-6260 locations,more limiting~~Additional plant-specific locations with a valid CUF may be evaluated. In particular, the pressurizer lower shell will be reviewed to ensure the surge nozzle remains the limiting component.

Representative CUF values from other plants, adjusted to or enveloping the plant-specific external loads may be used if demonstrated applicable.

An analysis using an NRC-approved version of the ASME code or NRC-approved alternative (e.g., NRC-approved code case) may be performed to determine a valid CUF.

~~(2) Manage the effects of aging due to fatigue at the affected locations by an inspection program that has been reviewed and approved by the NRC (e.g., periodic non-destructive examination of the affected locations at inspection intervals to be determined by a method acceptable to the NRC).~~

(~~3~~2) Consistent with the Fatigue Monitoring Program, Corrective Actions, ~~R~~repair or replace the affected locations before exceeding a CUF of 1.0.

~~Should IPEC select the option to manage the aging effects due to environmental-assisted fatigue during the period of extended operation, details of the aging management program such as scope, qualification, method, and frequency will be submitted to the NRC at least 2 years prior to the period of extended operation.~~

LRA Section B.1.12, Fatigue Monitoring, Program Description, is revised as follows.

The Fatigue Monitoring Program is an existing program that tracks the number of critical thermal and pressure transients for selected reactor coolant system components. The program ensures the validity of analyses that explicitly analyzed a specified number of fatigue transients by assuring that the actual effective number of transients does not exceed the analyzed number of transients.

The program provides for update of the fatigue usage calculations to maintain a CUF of < 1.0 for the period of extended operation. For the locations identified in LRA Table 4.3-13 (IP2) and LRA Table 4.3-14 (IP3), updated calculations will account for the effects of the reactor water environment. These calculation updates are governed by Entergy's 10 CFR 50 Appendix B Quality Assurance (QA) program and include design input verification and

independent reviews ensuring that valid assumptions, transients, cycles, external loadings, analysis methods, and environmental fatigue life correction factors will be used in the fatigue analyses.

The analysis methods for determination of stresses and fatigue usage will be in accordance with an NRC endorsed Edition of the American Society of Mechanical Engineers (ASME) Boiler and Pressure Vessel Code, Section III Rules for Construction of Nuclear Power Plant Components Division 1 Subsection NB, Class 1 Components, Sub articles NB-3200 or NB-3600 as applicable to the specific component. IPEC will utilize design transients from IPEC Design Specifications to bound all operational transients. The numbers of cycles used for evaluation will be based on the design number of cycles and actual IPEC cycle counts projected out to the end of the license renewal period (60 years).

Environmental effects on fatigue usage will be assessed using methodology consistent with the Generic Aging Lessons Learned Report, NUREG-1801, Rev. 1, (GALL) that states; "The sample of critical components can be evaluated by applying environmental life correction factors to the existing ASME Code fatigue analyses. Formulae for calculating the environmental life correction factors are contained in NUREG/CR-6583 for carbon and low-alloy steels and in NUREG/CR-5704 for austenitic stainless steels."

The Fatigue Monitoring Program tracks actual plant transients and evaluates these against the design transients. Cycle counts show no limits are expected to be approached for the current license term. The Fatigue Monitoring Program will ensure that the numbers of transient cycles experienced by the plant remain within the analyzed numbers of cycles and hence, the component CUFs remain below the values calculated in the design basis fatigue evaluations. If ongoing monitoring indicates the potential for a condition outside that analyzed above, IPEC may perform further reanalysis of the identified configuration using established configuration management processes as described above.

The program requires corrective actions including repair or replacement of affected components before fatigue usage calculations determine the CUF exceeds 1.0. Specific corrective actions are implemented in accordance with the IPEC corrective action program. Repair or replacement of the affected component(s), if necessary, will be in accordance with established plant procedures governing repair and replacement activities. These established procedures are governed by Entergy's 10 CFR 50 Appendix B QA program and meet the applicable repair or replacement requirements

ATTACHMENT 2 TO NL-08-021

Regulatory Commitment List, Revision 3

ENTERGY NUCLEAR OPERATIONS, INC.
INDIAN POINT NUCLEAR GENERATING UNIT NOS. 2 & 3
DOCKET NOS. 50-247 AND 50-286

List of Regulatory Commitments

Rev. 3

The following table identifies those actions committed to by Entergy in this document.

Any other statements in this submittal are provided for information purposes and are not considered to be regulatory commitments.

#	COMMITMENT	IMPLEMENTATION SCHEDULE	SOURCE	RELATED LRA SECTION / AUDIT ITEM
1	Enhance the Aboveground Steel Tanks Program for IP2 and IP3 to perform thickness measurements of the bottom surfaces of the condensate storage tanks, city water tank, and fire water tanks once during the first ten years of the period of extended operation. Enhance the Aboveground Steel Tanks Program for IP2 and IP3 to require trending of thickness measurements when material loss is detected.	IP2: September 28, 2013 IP3: December 12, 2015	NL-07-039	A.2.1.1 A.3.1.1 B.1.1
2	Enhance the Bolting Integrity Program for IP2 and IP3 to clarify that actual yield strength is used in selecting materials for low susceptibility to SCC and clarify the prohibition on use of lubricants containing MoS_2 for bolting. The Bolting Integrity Program manages loss of preload and loss of material for all external bolting.	IP2: September 28, 2013 IP3: December 12, 2015	NL-07-039 NL-07-153	A.2.1.2 A.3.1.2 B.1.2 Audit Items 201, 241, 270
3	Implement the Buried Piping and Tanks Inspection Program for IP2 and IP3 as described in LRA Section B.1.6. This new program will be implemented consistent with the corresponding program described in NUREG-1801 Section XI.M34, Buried Piping and Tanks Inspection.	IP2: September 28, 2013 IP3: December 12, 2015	NL-07-039 NL-07-153	A.2.1.5 A.3.1.5 B.1.6 Audit Item 173

#	COMMITMENT	IMPLEMENTATION SCHEDULE	SOURCE	RELATED LRA SECTION / AUDIT ITEM
4	Enhance the Diesel Fuel Monitoring Program to include cleaning and inspection of the IP2 GT-1 gas turbine fuel oil storage tanks, IP2 and IP3 EDG fuel oil day tanks, IP2 SBO/Appendix R diesel generator fuel oil day tank, and IP3 Appendix R fuel oil storage tank and day tank once every ten years. Enhance the Diesel Fuel Monitoring Program to include quarterly sampling and analysis of the IP2 SBO/Appendix R diesel generator fuel oil day tank, IP2 security diesel fuel oil day tank, and IP3 Appendix R fuel oil storage tank. Particulates, water and sediment checks will be performed on the samples. Filterable solids acceptance criterion will be less than or equal to 10mg/l. Water and sediment acceptance criterion will be less than or equal to 0.05%. Enhance the Diesel Fuel Monitoring Program to include thickness measurement of the bottom surface of the following tanks once every ten years. IP2: EDG fuel oil storage tanks, EDG fuel oil day tanks, SBO/Appendix R diesel generator fuel oil day tank, GT-1 gas turbine fuel oil storage tanks, and diesel fire pump fuel oil storage tank; IP3: EDG fuel oil day tanks, Appendix R fuel oil storage tank, and diesel fire pump fuel oil storage tank. Enhance the Diesel Fuel Monitoring Program to change the analysis for water and particulates to a quarterly frequency for the following tanks. IP2: GT-1 gas turbine fuel oil storage tanks and diesel fire pump fuel oil storage tank; IP3: Appendix R fuel oil day tank and diesel fire pump fuel oil storage tank. Enhance the Diesel Fuel Monitoring Program to specify acceptance criteria for thickness measurements of the fuel oil storage tanks within the scope of the program. Enhance the Diesel Fuel Monitoring Program to direct samples be taken near the tank bottom and include direction to remove water when detected. Enhance the Diesel Fuel Monitoring Program to direct the addition of chemicals including biocide when the presence of biological activity is confirmed.	IP2: September 28, 2013 IP3: December 12, 2015	NL-07-039 NL-07-153	A.2.1.8 A.3.1.8 B.1.9 Audit items 128, 129, 132

#	COMMITMENT	IMPLEMENTATION SCHEDULE	SOURCE	RELATED LRA SECTION / AUDIT ITEM
5	Enhance the External Surfaces Monitoring Program for IP2 and IP3 to include periodic inspections of systems in scope and subject to aging management review for license renewal in accordance with 10 CFR 54.4(a)(1) and (a)(3). Inspections shall include areas surrounding the subject systems to identify hazards to those systems. Inspections of nearby systems that could impact the subject systems will include SSCs that are in scope and subject to aging management review for license renewal in accordance with 10 CFR 54.4(a)(2).	IP2: September 28, 2013 IP3: December 12, 2015	NL-07-039	A.2.1.10 A.3.1.10 B.1.11
6	Enhance the Fatigue Monitoring Program for IP2 to monitor steady state cycles and feedwater cycles or perform an evaluation to determine monitoring is not required. Review the number of allowed events and resolve discrepancies between reference documents and monitoring procedures. Enhance the Fatigue Monitoring Program for IP3 to include all the transients identified. Assure all fatigue analysis transients are included with the lowest limiting numbers. Update the number of design transients accumulated to date.	IP2: September 28, 2013 IP3: December 12, 2015	NL-07-039 NL-07-153	A.2.1.11 A.3.1.11 B.1.12, Audit Item 164

#	COMMITMENT	IMPLEMENTATION SCHEDULE	SOURCE	RELATED LRA SECTION / AUDIT ITEM
7	Enhance the Fire Protection Program to inspect external surfaces of the IP3 RCP oil collection systems for loss of material each refueling cycle. Enhance the Fire Protection Program to explicitly state that the IP2 and IP3 diesel fire pump engine sub-systems (including the fuel supply line) shall be observed while the pump is running. Acceptance criteria will be revised to verify that the diesel engine does not exhibit signs of degradation while running; such as fuel oil, lube oil, coolant, or exhaust gas leakage. Enhance the Fire Protection Program to specify that the IP2 and IP3 diesel fire pump engine carbon steel exhaust components are inspected for evidence of corrosion and cracking at least once each operating cycle. Enhance the Fire Protection Program for IP3 to visually inspect the cable spreading room, 480V switchgear room, and EDG room CO_2 fire suppression system for signs of degradation, such as corrosion and mechanical damage at least once every six months.	IP2: September 28, 2013 IP3: December 12, 2015	NL-07-039	A.2.1.12 A.3.1.12 B.1.13

#	COMMITMENT	IMPLEMENTATION SCHEDULE	SOURCE	RELATED LRA SECTION / AUDIT ITEM
8	Enhance the Fire Water Program to include inspection of IP2 and IP3 hose reels for evidence of corrosion. Acceptance criteria will be revised to verify no unacceptable signs of degradation. Enhance the Fire Water Program to replace all or test a sample of IP2 and IP3 sprinkler heads required for 10 CFR 50.48 using guidance of NFPA 25 (2002 edition), Section 5.3.1.1.1 before the end of the 50-year sprinkler head service life and at 10-year intervals thereafter during the extended period of operation to ensure that signs of degradation, such as corrosion, are detected in a timely manner. Enhance the Fire Water Program to perform wall thickness evaluations of IP2 and IP3 fire protection piping on system components using non-intrusive techniques (e.g., volumetric testing) to identify evidence of loss of material due to corrosion. These inspections will be performed before the end of the current operating term and at intervals thereafter during the period of extended operation. Results of the initial evaluations will be used to determine the appropriate inspection interval to ensure aging effects are identified prior to loss of intended function. Enhance the Fire Water Program to inspect the internal surface of foam based fire suppression tanks. Acceptance criteria will be enhanced to verify no significant corrosion.	IP2: September 28, 2013 IP3: December 12, 2015	NL-07-039 NL-07-153 NL-08-014	A.2.1.13 A.3.1.13 B.1.14 Audit Items 105, 106

#	COMMITMENT	IMPLEMENTATION SCHEDULE	SOURCE	RELATED LRA SECTION / AUDIT ITEM
9	Enhance the Flux Thimble Tube Inspection Program for IP2 and IP3 to implement comparisons to wear rates identified in WCAP-12866. Include provisions to compare data to the previous performances and perform evaluations regarding change to test frequency and scope. Enhance the Flux Thimble Tube Inspection Program for IP2 and IP3 to specify the acceptance criteria as outlined in WCAP-12866 or other plant-specific values based on evaluation of previous test results. Enhance the Flux Thimble Tube Inspection Program for IP2 and IP3 to direct evaluation and performance of corrective actions based on tubes that exceed or are projected to exceed the acceptance criteria. Also stipulate that flux thimble tubes that cannot be inspected over the tube length and cannot be shown by analysis to be satisfactory for continued service, must be removed from service to ensure the integrity of the reactor coolant system pressure boundary.	IP2: September 28, 2013 IP3: December 12, 2015	NL-07-039	A.2.1.15 A.3.1.15 B.1.16

#	COMMITMENT	IMPLEMENTATION SCHEDULE	SOURCE	RELATED LRA SECTION / AUDIT ITEM
10	Enhance the Heat Exchanger Monitoring Program for IP2 and IP3 to include the following heat exchangers in the scope of the program. • Safety injection pump lube oil heat exchangers • RHR heat exchangers • RHR pump seal coolers • Non-regenerative heat exchangers • Charging pump seal water heat exchangers • Charging pump fluid drive coolers • Charging pump crankcase oil coolers • Spent fuel pit heat exchangers • Secondary system steam generator sample coolers • Waste gas compressor heat exchangers • SBO/Appendix R diesel jacket water heat exchanger (IP2 only) Enhance the Heat Exchanger Monitoring Program for IP2 and IP3 to perform visual inspection on heat exchangers where non-destructive examination, such as eddy current inspection, is not possible due to heat exchanger design limitations. Enhance the Heat Exchanger Monitoring Program for IP2 and IP3 to include consideration of material-environment combinations when determining sample population of heat exchangers. Enhance the Heat Exchanger Monitoring Program for IP2 and IP3 to establish minimum tube wall thickness for the new heat exchangers identified in the scope of the program. Establish acceptance criteria for heat exchangers visually inspected to include no unacceptable signs of degradation.	IP2: September 28, 2013 IP3: December 12, 2015	NL-07-039 NL-07-153	A.2.1.16 A.3.1.16 B.1.17, Audit Item 52

#	COMMITMENT	IMPLEMENTATION SCHEDULE	SOURCE	RELATED LRA SECTION / AUDIT ITEM
11	Enhance the ISI Program for IP2 and IP3 to provide periodic visual inspections to confirm the absence of aging effects for lubrite sliding supports used in the steam generator and reactor coolant pump support systems.	IP2: September 28, 2013 IP3: December 12, 2015	NL-07-039 NL-07-153	A.2.1.17 A.3.1.17 B.1.18 Audit item 59
12	Enhance the Masonry Wall Program for IP2 and IP3 to specify that the IP1 intake structure is included in the program.	IP2: September 28, 2013 IP3: December 12, 2015	NL-07-039	A.2.1.18 A.3.1.18 B.1.19
13	Enhance the Metal-Enclosed Bus Inspection Program to add IP2 480V bus associated with substation A to the scope of bus inspected. Enhance the Metal-Enclosed Bus Inspection Program for IP2 and IP3 to visually inspect the external surface of MEB enclosure assemblies for loss of material at least once every 10 years. The first inspection will occur prior to the period of extended operation and the acceptance criterion will be no significant loss of material. Enhance the Metal-Enclosed Bus Inspection Program for IP2 and IP3 to inspect bolted connections at least once every five years if performed visually or at least once every ten years using quantitative measurements such as thermography or contact resistance measurements. The first inspection will occur prior to the period of extended operation. The plant will process a change to applicable site procedure to remove the reference to "re-torquing" connections for phase bus maintenance and bolted connection maintenance.	IP2: September 28, 2013 IP3: December 12, 2015	NL-07-039 NL-07-153	A.2.1.19 A.3.1.19 B.1.20 Audit Item 124 Audit Item 133
14	Implement the Non-EQ Bolted Cable Connections Program for IP2 and IP3 as described in LRA Section B.1.22.	IP2: September 28, 2013 IP3: December 12, 2015	NL-07-039	A.2.1.21 A.3.1.21 B.1.22

#	COMMITMENT	IMPLEMENTATION SCHEDULE	SOURCE	RELATED LRA SECTION / AUDIT ITEM
15	Implement the Non-EQ Inaccessible Medium-Voltage Cable Program for IP2 and IP3 as described in LRA Section B.1.23. This new program will be implemented consistent with the corresponding program described in NUREG-1801 Section XI.E3, Inaccessible Medium-Voltage Cables Not Subject To 10 CFR 50.49 Environmental Qualification Requirements.	IP2: September 28, 2013 IP3: December 12, 2015	NL-07-039 NL-07-153	A.2.1.22 A.3.1.22 B.1.23 Audit item 173
16	Implement the Non-EQ Instrumentation Circuits Test Review Program for IP2 and IP3 as described in LRA Section B.1.24. This new program will be implemented consistent with the corresponding program described in NUREG-1801 Section XI.E2, Electrical Cables and Connections Not Subject to 10 CFR 50.49 Environmental Qualification Requirements Used in Instrumentation Circuits.	IP2: September 28, 2013 IP3: December 12, 2015	NL-07-039 NL-07-153	A.2.1.23 A.3.1.23 B.1.24 Audit item 173
17	Implement the Non-EQ Insulated Cables and Connections Program for IP2 and IP3 as described in LRA Section B.1.25. This new program will be implemented consistent with the corresponding program described in NUREG-1801 Section XI.E1, Electrical Cables and Connections Not Subject to 10 CFR 50.49 Environmental Qualification Requirements.	IP2: September 28, 2013 IP3: December 12, 2015	NL-07-039 NL-07-153	A.2.1.24 A.3.1.24 B.1.25 Audit item 173

#	COMMITMENT	IMPLEMENTATION SCHEDULE	SOURCE	RELATED LRA SECTION / AUDIT ITEM
18	Enhance the Oil Analysis Program for IP2 to sample and analyze lubricating oil used in the SBO/Appendix R diesel generator consistent with oil analysis for other site diesel generators. Enhance the Oil Analysis Program for IP2 and IP3 to sample and analyze generator seal oil and turbine hydraulic control oil. Enhance the Oil Analysis Program for IP2 and IP3 to formalize preliminary oil screening for water and particulates and laboratory analyses including defined acceptance criteria for all components included in the scope of this program. The program will specify corrective actions in the event acceptance criteria are not met. Enhance the Oil Analysis Program for IP2 and IP3 to formalize trending of preliminary oil screening results as well as data provided from independent laboratories.	IP2: September 28, 2013 IP3: December 12, 2015	NL-07-039	A.2.1.25 A.3.1.25 B.1.26
19	Implement the One-Time Inspection Program for IP2 and IP3 as described in LRA Section B.1.27. This new program will be implemented consistent with the corresponding program described in NUREG-1801, Section XI.M32, One-Time Inspection.	IP2: September 28, 2013 IP3: December 12, 2015	NL-07-039 NL-07-153	A.2.1.26 A.3.1.26 B.1.27 Audit item 173
20	Implement the One-Time Inspection – Small Bore Piping Program for IP2 and IP3 as described in LRA Section B.1.28. This new program will be implemented consistent with the corresponding program described in NUREG-1801, Section XI.M35, One-Time Inspection of ASME Code Class I Small-Bore Piping.	IP2: September 28, 2013 IP3: December 12, 2015	NL-07-039 NL-07-153	A.2.1.27 A.3.1.27 B.1.28 Audit item 173
21	Enhance the Periodic Surveillance and Preventive Maintenance Program for IP2 and IP3 as necessary to assure that the effects of aging will be managed such that applicable components will continue to perform their intended functions consistent with the current licensing basis through the period of extended operation.	IP2: September 28, 2013 IP3: December 12, 2015	NL-07-039	A.2.1.28 A.3.1.28 B.1.29

#	COMMITMENT	IMPLEMENTATION SCHEDULE	SOURCE	RELATED LRA SECTION / AUDIT ITEM
22	Enhance the Reactor Vessel Surveillance Program for IP2 and IP3 revising the specimen capsule withdrawal schedules to draw and test a standby capsule to cover the peak reactor vessel fluence expected through the end of the period of extended operation. Enhance the Reactor Vessel Surveillance Program for IP2 and IP3 to require that tested and untested specimens from all capsules pulled from the reactor vessel are maintained in storage.	IP2: September 28, 2013 IP3: December 12, 2015	NL-07-039	A.2.1.31 A.3.1.31 B.1.32
23	Implement the Selective Leaching Program for IP2 and IP3 as described in LRA Section B.1.33. This new program will be implemented consistent with the corresponding program described in NUREG-1801, Section XI.M33 Selective Leaching of Materials.	IP2: September 28, 2013 IP3: December 12, 2015	NL-07-039 NL-07-153	A.2.1.32 A.3.1.32 B.1.33 Audit item 173
24	Enhance the Steam Generator Integrity Program for IP2 and IP3 to require that the results of the condition monitoring assessment are compared to the operational assessment performed for the prior operating cycle with differences evaluated.	IP2: September 28, 2013 IP3: December 12, 2015	NL-07-039	A.2.1.34 A.3.1.34 B.1.35
25	Enhance the Structures Monitoring Program to explicitly specify that the following structures are included in the program. • Appendix R diesel generator foundation (IP3) • Appendix R diesel generator fuel oil tank vault (IP3) • Appendix R diesel generator switchgear and enclosure (IP3) • city water storage tank foundation • condensate storage tanks foundation (IP3) • containment access facility and annex (IP3) • discharge canal (IP2/3) • emergency lighting poles and foundations (IP2/3) • fire pumphouse (IP2) • fire protection pumphouse (IP3) • fire water storage tank foundations (IP2/3) • gas turbine 1 fuel storage tank foundation • maintenance and outage building-elevated passageway (IP2) • new station security building (IP2)	IP2: September 28, 2013 IP3: December 12, 2015	NL-07-039 NL-07-153	A.2.1.35 A.3.1.35 B.1.36 Audit item 86 Audit item 88 Audit Item 87

#	COMMITMENT	IMPLEMENTATION SCHEDULE	SOURCE	RELATED LRA SECTION / AUDIT ITEM
	• nuclear service building (IP1) • primary water storage tank foundation (IP3) • refueling water storage tank foundation (IP3) • security access and office building (IP3) • service water pipe chase (IP2/3) • service water valve pit (IP3) • superheater stack • transformer/switchyard support structures (IP2) • waste holdup tank pits (IP2/3) Enhance the Structures Monitoring Program for IP2 and IP3 to clarify that in addition to structural steel and concrete, the following commodities (including their anchorages) are inspected for each structure as applicable. • cable trays and supports • concrete portion of reactor vessel supports • conduits and supports • cranes, rails and girders • equipment pads and foundations • fire proofing (pyrocrete) • HVAC duct supports • jib cranes • manholes and duct banks • manways, hatches and hatch covers • monorails • new fuel storage racks • sumps, sump screens, strainers and flow barriers Enhance the Structures Monitoring Program for IP2 and IP3 to inspect inaccessible concrete areas that are exposed by excavation for any reason. IP2 and IP3 will also inspect inaccessible concrete areas in environments where observed conditions in accessible areas exposed to the same environment indicate that significant concrete degradation is occurring. Enhance the Structures Monitoring Program for IP2 and IP3 to perform inspections of elastomers (seals, gaskets, seismic joint filler, and roof elastomers) to identify cracking and change in material properties and for inspection of aluminum vents and louvers to identify loss of material.			

#	COMMITMENT	IMPLEMENTATION SCHEDULE	SOURCE	RELATED LRA SECTION / AUDIT ITEM
	Enhance the Structures Monitoring Program for IP2 and IP3 to perform an engineering evaluation of groundwater samples to assess aggressiveness of groundwater to concrete on a periodic basis (at least once every five years). IPEC will obtain samples from at least 5 wells that are representative of the ground water surrounding below-grade site structures. Samples will be monitored for sulfates, pH and chlorides. Enhance the Structures Monitoring Program for IP2 and IP3 to perform inspection of normally submerged concrete portions of the intake structures at least once every 5 years.			
26	Implement the Thermal Aging Embrittlement of Cast Austenitic Stainless Steel (CASS) Program for IP2 and IP3 as described in LRA Section B.1.37. This new program will be implemented consistent with the corresponding program described in NUREG-1801, Section XI.M12, Thermal Aging Embrittlement of Cast Austenitic Stainless Steel (CASS) Program.	IP2: September 28, 2013 IP3: December 12, 2015	NL-07-039 NL-07-153	A.2.1.36 A.3.1.36 B.1.37 Audit item 173
27	Implement the Thermal Aging and Neutron Irradiation Embrittlement of Cast Austenitic Stainless Steel (CASS) Program for IP2 and IP3 as described in LRA Section B.1.38. This new program will be implemented consistent with the corresponding program described in NUREG-1801 Section XI.M13, Thermal Aging and Neutron Embrittlement of Cast Austenitic Stainless Steel (CASS) Program.	IP2: September 28, 2013 IP3: December 12, 2015	NL-07-039 NL-07-153	A.2.1.37 A.3.1.37 B.1.38 Audit item 173
28	Enhance the Water Chemistry Control – Closed Cooling Water Program to maintain water chemistry of the IP2 SBO/Appendix R diesel generator cooling system per EPRI guidelines. Enhance the Water Chemistry Control – Closed Cooling Water Program to maintain the IP2 and IP3 security generator cooling water system pH within limits specified by EPRI guidelines.	IP2: September 28, 2013 IP3: December 12, 2015	NL-07-039	A.2.1.39 A.3.1.39 B.1.40

#	COMMITMENT	IMPLEMENTATION SCHEDULE	SOURCE	RELATED LRA SECTION / AUDIT ITEM
29	Enhance the Water Chemistry Control – Primary and Secondary Program for IP2 to test sulfates monthly in the RWST with a limit of <150 ppb.	IP2: September 28, 2013	NL-07-039	A.2.1.40 B.1.41
30	For aging management of the reactor vessel internals, IPEC will (1) participate in the industry programs for investigating and managing aging effects on reactor internals; (2) evaluate and implement the results of the industry programs as applicable to the reactor internals; and (3) upon completion of these programs, but not less than 24 months before entering the period of extended operation, submit an inspection plan for reactor internals to the NRC for review and approval.	IP2: September 28, 2011 IP3: December 12, 2013	NL-07-039	A.2.1.41 A.3.1.41
31	Additional P-T curves will be submitted as required per 10 CFR 50, Appendix G prior to the period of extended operation as part of the Reactor Vessel Surveillance Program.	IP2: September 28, 2013 IP3: December 12, 2015	NL-07-039	A.2.2.1.2 A.3.2.1.2 4.2.3
32	As required by 10 CFR 50.61(b)(4), IP3 will submit a plant-specific safety analysis for plate B2803-3 to the NRC three years prior to reaching the RT_{PTS} screening criterion. Alternatively, the site may choose to implement the revised PTS (10 CFR 50.61) rule when approved, which would permit use of Regulatory Guide 1.99, Revision 3.	IP3: December 12, 2015	NL-07-039	A.3.2.1.4 4.2.5

#	COMMITMENT	IMPLEMENTATION SCHEDULE	SOURCE	RELATED LRA SECTION / AUDIT ITEM
33	At least 2 years prior to entering the period of extended operation, for the locations identified in LRA Table 4.3-13 (IP2) and LRA Table 4.3-14 (IP3), under the Fatigue Monitoring Program, IP2 and IP3 will implement one or more of the following: (1) Consistent with the Fatigue Monitoring Program, Detection of Aging Effects, update the fatigue usage calculations using ~~R~~refined ~~the~~ fatigue analyses to determine valid CUFs less than 1.0 when accounting for the effects of reactor water environment. This includes applying the appropriate Fen factors to valid CUFs determined in accordance with one of the following: 1. For locations in LRA Table 4.3-13 (IP2) and LRA Table 4.3-14 (IP3) ~~including NUREG/CR-6260 locations~~, with existing fatigue analysis valid for the period of extended operation, use the existing CUF. ~~to determine the environmentally adjusted CUF.~~ 2. ~~In addition to the NUREG/CR-6260 locations, more limiting~~ Additional plant-specific locations with a valid CUF may be evaluated. In particular, the pressurizer lower shell will be reviewed to ensure the surge nozzle remains the limiting component. 3. Representative CUF values from other plants, adjusted to or enveloping the IPEC plant specific external loads may be used if demonstrated applicable to IPEC. 4. An analysis using an NRC-approved version of the ASME code or NRC-approved alternative (e.g., NRC-approved code case) may be performed to determine a valid CUF. ~~(2) Manage the effects of aging due to fatigue at the affected locations by an inspection program that has been reviewed and approved by the NRC (e.g., periodic non-destructive examination of the affected locations at inspection intervals to be determined by a method acceptable to the NRC).~~ ~~(3)~~ (2) Consistent with the Fatigue Monitoring Program, Corrective Actions, ~~R~~repair or replace the affected locations before exceeding a CUF of 1.0. ~~Should IPEC select the option to manage the aging effects due to environmental-assisted fatigue during the period of extended operation, details of the aging management program such as scope, qualification, method, and frequency will be submitted to the NRC at least 2 years prior to the period of extended operation.~~	IP2: September 28, 2011 IP3: December 12, 2013	NL-07-039 NL-07-153 NL-08-021	A.2.2.2.3 A.3.2.2.3 4.3.3 Audit item 146

#	COMMITMENT	IMPLEMENTATION SCHEDULE	SOURCE	RELATED LRA SECTION / AUDIT ITEM
34	IP2 SBO / Appendix R diesel generator will be installed and operational by April 30, 2008. This committed change to the facility meets the requirements of 10 CFR 50.59(c)(1) and, therefore, a license amendment pursuant to 10 CFR 50.90 is not required.	April 30, 2008	NL-07-078	2.1.1.3.5

Entergy New Contention NYS-38/RK-TC-5
Attachment 8

PSEG
P.O. Box 236, Hancocks Bridge, NJ 08038-0236

PSEG
Nuclear LLC

FEB 24 2011

10 CFR 50
10 CFR 51
10 CFR 54

LR-N11-0057

U.S. Nuclear Regulatory Commission
ATTN: Document Control Desk
Washington, DC 20555-0001

Salem Nuclear Generating Station, Unit No. 1 and Unit No. 2
Facility Operating License Nos. DPR-70 and DPR-75
NRC Docket Nos. 50-272 and 50-311

Subject: Close-out of the NRC Audit associated with use of WESTEMS™ related to the Salem Nuclear Generating Station, Units 1 and 2 License Renewal Application

Reference: Letter from Mr. Robert C. Braun (PSEG Nuclear, LLC) to the NRC, "Follow-Up Responses to Questions Raised during January 18-19, 2011 NRC Audit of WESTEMS™ Program Benchmarking Activities, Related to the Salem Nuclear Generating Station, Units 1 and 2 License Renewal Application," dated January 31, 2011

On January 18 and 19, 2011, the NRC Staff audited various activities related to the use of WESTEMS™ associated with the Salem Nuclear Generating Station, Units 1 and 2 License Renewal Application. In the referenced letter, PSEG Nuclear provided the Staff with information responding to five specific questions raised during the Audit.

Audit activities were resumed on February 8, 2011, at which time PSEG Nuclear, Westinghouse, and NRC staff reviewed the results of calculation updates that documented the basis for stress analyst activities related to the license renewal environmentally-assisted fatigue (EAF) calculations. After this review, the NRC determined that follow-up actions would be needed from PSEG Nuclear in order to satisfactorily complete the Audit.

Enclosure A of this letter is an update to the information provided in Enclosure A of the January 31, 2011 Reference letter, and replaces that response package in its entirety, with changes indicated. Similarly, Enclosure B of this letter updates and replaces the License Renewal Commitment List changes that had been provided as Enclosure B in the January 31, 2011 Reference letter. Although unchanged, Enclosure C from the January 31, 2011 referenced submittal is again provided as Enclosure C to this letter, for completeness. Together, these Enclosures provide the information needed to close out NRC Staff questions associated with the WESTEMS™ Audit.

A141
NRR

There are no other new or revised regulatory commitments associated with this submittal.

If you have any questions, please contact Mr. Ali Fakhar, PSEG Manager - License Renewal, at 856-339-1646.

I declare under penalty of perjury that the foregoing is true and correct.

Executed on 2/24/11

Sincerely,

Paul J. Davison

Paul J. Davison
Vice President, Operations Support
PSEG Nuclear LLC

Enclosures:

A. Updated Responses to NRC Questions associated with Use of WESTEMS™ associated with the Salem Nuclear Generating Station, Units 1 and 2 License Renewal Application

B Update to License Renewal Commitment List

C. "Method for Selecting Stress States for Use in an NB-3200 Fatigue Analysis," Proceedings of the ASME 2010 Pressure Vessels & Piping Division / K-PVP Conference, July 18-22, 2010, Bellevue, Washington, USA

cc: William M. Dean, Regional Administrator – USNRC Region I
B. Brady, Project Manager, License Renewal – USNRC
R. Ennis, Project Manager - USNRC
NRC Senior Resident Inspector – Salem
P. Mulligan, Manager IV, NJBNE
L. Marabella, Corporate Commitment Tracking Coordinator
Howard Berrick, Salem Commitment Tracking Coordinator

Enclosure A

Updated Responses to NRC Questions associated with Use of WESTEMS™ associated with the Salem Nuclear Generating Station, Units 1 and 2 License Renewal Application

In January and February, 2011, the NRC conducted an audit of PSEG Nuclear's use of WESTEMS™ associated with the Salem Nuclear Generating Station, Units 1 and 2 License Renewal Application (LRA). During the audit, the NRC requested additional information. PSEG Nuclear provided responses to these requests in its letter LR-N11-0042 dated January 31, 2011. As a result of follow-up audit discussions held on February 8, 2011, these responses are being updated (and new items added) to clarify or supplement the earlier responses. Changes to the earlier responses and affected LRA Sections are shown with ***bold, italics*** font for additions and ~~strikethrough~~ text for deletions. As in the January 31, 2011 letter, the specific request for additional information is stated below, followed by the PSEG Nuclear response.

Audit Question No. 1:

In order to close-out the Salem WESTEMS audit, for the WESTEMS "Design CUF" module analysis of the BIT and surge nozzles, provide written explanation and justification of any user intervention in the process including the user intervention applied to the peak and valley selection process.

PSEG Response:

Westinghouse has revised their environmentally-assisted fatigue (EAF) calculations that supported the Salem License Renewal Application (LRA) for the Unit 2 Pressurizer Surge Nozzle Safe End to Pipe Weld and the Unit 2 Safety Injection Boron Injection Tank (BIT) Nozzle Coupling to Cold Leg Weld. The revision specifically added a new section to an existing Appendix to document the following:

1. Description of the WESTEMS™ stress peak and valley selection algorithm.

2. A new WESTEMS™ program run with no analyst intervention (i.e. no manual removal by the analyst).

3. Numerical comparison of the number of stress peaks and valleys selected by the analyst in the original revision of the calculation to the number of stress peaks and valleys selected during the new WESTEMS™ program run.

4. Justification for analyst manual removal of the stress peaks and valleys on a transient-by-transient basis only when WESTEMS™ selected more stress peaks and valleys than the analyst. In the cases where the analyst selected more stress peaks and valleys than WESTEMS™, justification is not required since this method is more conservative for the fatigue evaluation.

   The justification is illustrated in the new section of the Appendix by use of plots generated by a spreadsheet containing downloaded data of the Total Stress Intensity and Primary plus Secondary ***Stress*** Intensity values for each transient. The plots depict the stress peaks selected by WESTEMS™ and by the analyst. Documentation is provided in the new section of the Appendix justifying removal of redundant stress peaks and valleys for each transient.

5. For the Unit 2 Safety Injection BIT Nozzle Coupling to Cold Leg Weld location, two new tables are added to list the fatigue pairs and corresponding fatigue usage for the original revision of the calculation (analyst intervention) and where no analyst intervention was involved for comparison of the total cumulative usage factor (CUF). For the Unit 2 Pressurizer Surge Nozzle Safe End to Pipe Weld location, the fatigue usage values were compared and were the same value in both the original revision of the calculation, and the revised calculation where no analyst intervention was involved.

Although the 60-Year Design CUF value for the Unit 2 Safety Injection BIT Nozzle Coupling to Cold Leg Weld location was higher in the case of no analyst intervention during the stress peak and valley process, justification is provided for removal of redundant stress peaks and valleys. The 60-Year Design CUF listed in LRA Table 4.3.7-2, "Salem Unit 2 60-Year Environmentally-Assisted Fatigue Results," reflects justified analyst intervention during the stress peak and valley process.

The revised proprietary calculations have been approved by Salem, and ~~will be~~ ***were*** made available for NRC review during the ~~next~~ ***February 8, 2011*** phase of the WESTEMS™ audit.

During the February 8, 2011 review of the BIT Nozzle Coupling to Cold Leg Weld location calculation update, the basis for analyst removal of two of the peak and valley times from the data was unclear and not sufficiently documented in the calculation. The following discussion provides the detailed basis for the analyst removal of two of the peak and valley times from the data.

Specifically, for Transient 2 (Primary Side Leak Test), WESTEMS™ selected five (5) peaks. The analyst selected two (2) peaks for use in the fatigue evaluation. The first of three (3) peaks was removed because it represented the same Total Stress as a peak approximately seventy-two minutes prior to this peak, and since the Primary plus Secondary stress in this evaluation does not result in any K_e (simplified elastic plastic penalty factor applied to alternating stress when the Primary plus Secondary Stress Intensity Range limit is exceeded), values greater than 1.0, it is redundant with the previous peak, and not required. The last (2) peaks in the transient are redundant peaks of the initial state captured by the first peak time, since the transient returns to the same stress state as it started. This stress state is redundant because it is the same stress state as the initial stress state of another Primary Side Leak Test transient cycle, or any other transient that begins at a similar plant no-load condition (e.g., Unit Load, etc.). For Transient 11 (High Head Safety Injection Boron Injection [Inadvertent Safety Injection] transient), WESTEMS™ selected nine (9) peaks. The analyst selected six (6) peaks for use in the fatigue evaluation. There were five (5) peaks selected by WESTEMS™ early in the transient. The analyst removed two of the five peaks because they were selected based on peaks in the Primary plus Secondary Stress. Since the Primary plus Secondary Stress Intensity Range is less than the allowable of 3Sm, a K_e penalty factor on alternating stress is not required, and therefore, two peaks were considered redundant and able to be removed. Later in this transient, two peaks were selected by WESTEMS™ within several seconds of each other. WESTEMS™ selected the first of these two peaks because of a stress

intensity inflection point created by a stress component sign reversal and an accompanying change in the controlling principal stress. A revision to the fatigue evaluation re-established the basis for removal of one of these two peaks by reviewing a plot of total stress component history. Only one true peak had occurred and was selected by the analyst for use in the fatigue evaluation. The stress intensity inflection point of the other peak does not represent the final extreme stress range caused by the transient excursion, and was considered unnecessary for inclusion in the fatigue evaluation. Towards the end of the transient, there were two (2) peaks within 65 seconds of each other. Since the stress states were the same, the analyst selected one of these two peaks for use in the fatigue evaluation. The analyst added one (1) peak that was not selected by WESTEMS™ at the initial time of the transient for additional conservatism in the fatigue evaluation.

The associated calculation has now been updated to properly capture the basis for this user intervention activity.

Audit Question No. 2:

For any WESTEMS "Design CUF" module analyses performed for the remaining monitored locations at Salem (i.e., other than the BIT and surge nozzles), provide written explanation and justification of any user intervention applied in the process including the user intervention applied to the peak and valley selection process prior to two years before entering the period of extended operation.

PSEG Response:

~~Salem will revise the fatigue calculations for all locations monitored at Salem Units 1 and 2 to include a written explanation and justification of any user intervention applied for any WESTEMS™ "Design CUF" module analyses, including the user intervention applied to the stress peak and valley selection, at least two years prior to entering the period of extended operation.~~

PSEG Nuclear has reviewed the justification for the stress peak and valley editing provided in revisions to the Unit 2 Pressurizer Surge Nozzle Safe End to Pipe Weld and the Unit 2 Safety Injection Boron Injection Tank (BIT) Nozzle Coupling to Cold Leg Weld EAF calculations. Discussions with Westinghouse concluded that stress peak and valley editing during the fatigue calculation process for the remaining locations monitored by WESTEMS™ at Salem Units 1 and 2 is consistent with the two locations that were the subject of the WESTEMS™ benchmarking audit, and that the two calculations that were revised are considered to be the most limiting with respect to cumulative usage. Therefore, PSEG Nuclear has deemed it unnecessary to revise the existing EAF calculations performed for the remaining WESTEMS™ monitored locations to include a written explanation and justification of any user intervention applied for any WESTEMS™ "Design CUF" (NB-3200 module) analyses, including the user intervention applied to the stress peak and valley selection.

Therefore, PSEG Nuclear is retracting what had been proposed as commitment #53 as described in PSEG letter LR-N11-0042, "Follow-Up Responses to Questions Raised during January 18-19, 2011 NRC Audit of WESTEMS™ Program Benchmarking Activities, Related to the Salem Nuclear Generating Station, Units 1 and 2 License Renewal Application", dated January 31, 2011. The License Renewal Commitment List is revised accordingly, as shown in Enclosure B.
~~As a result of this response, commitment #53 is added to LRA Table A.5, License Renewal Commitment List, as shown in Enclosure B of this letter.~~

Audit Question No. 3:

For any use of the WESTEMS "Design CUF" module in the future at Salem, include written explanation and justification of any user intervention in the process.

PSEG Response:

Salem will include written explanation and justification of any user intervention in future evaluations using the WESTEMS™ "Design CUF" ***(NB-3200*** module***)***.

As a result of this response, commitment #~~54~~ ***53*** is added to LRA Table A.5, License Renewal Commitment List, as shown in Enclosure B of this letter. ***The seventh paragraph of LRA Section A.4.3.7 is also revised, as shown following the response to Audit Question No. 4, below.***

Audit Question No. 4:

Provide a commitment that the NB-3600 option of the WESTEMS "Design CUF" module will not be implemented or used in the future at Salem.

PSEG Response:

Salem will commit to not use or implement the NB-3600 option (module) of the WESTEMS™ program in future online fatigue monitoring and design CUF calculations.

As a result of this response, commitment #~~55~~ ***54*** is added to LRA Table A.5, License Renewal Commitment List, as shown in Enclosure B of this letter. ***The seventh paragraph of LRA Section A.4.3.7 is also revised, as shown below.***

A.4.3.7 Environmentally-Assisted Fatigue Analyses

The evaluations showed that no cumulative usage factors with environmental penalties exceeded 1.0 for 60 years of service for the identified plant-specific locations. ***Future fatigue evaluations using WESTEMS™ "Design CUF" (NB-3200 module) will include written explanation and justification of any user intervention. Future fatigue design calculations will not use or implement the NB-3600 option (module) of the WESTEMS™ program.*** The Metal Fatigue of Reactor Coolant Pressure Boundary aging management program (B.3.1.1) will be

used to manage the aging effects of environmentally assisted fatigue for the components in Salem LRA Tables 4.3.7-1 and 4.3.7-2.

Audit Question No. 5:

Provide a description of the peak and valley selection process used by WESTEMS and how that process aligns with ASME Code NB-3216 methodology.

PSEG Response:

WESTEMS™ is a software program developed by Westinghouse Electric Company LLC (Westinghouse). It is used to perform fatigue evaluations for components using NB-3200 stress models, referred to as Analysis Section Number (ASN) models by Westinghouse, according to the ASME Boiler and Pressure Vessel Code, Section III, Subsection NB-3222.4, 1986 edition. As part of the ASME Code fatigue evaluation, the person performing the fatigue evaluation (analyst) is required to select the extremes of the stress cycles (stress peaks and valleys) imposed by the component's transient loads (thermal, mechanical, etc.). WESTEMS™ uses an automated approach to assist the analyst in selecting the stress peak and valley times in each transient. The approach is described in general, with respect to the associated ASME Code fatigue evaluation requirements, in Westinghouse's publication, "Method for Selecting Stress States for Use in an NB-3200 Fatigue Analysis," PVP2010-25891, Proceedings of the ASME 2010 Pressure Vessels & Piping Division / K-PVP Conference, July 18-22, 2010, Bellevue, Washington, USA . This paper is attached to this letter as Enclosure C.

The WESTEMS™ stress peak and valley algorithm and associated analyst options for its use are described in the WESTEMS™ User's Manual, Volume 2. The alignment between the WESTEMS™ automated approach and ASME Code NB-3216 methodology (NB-3216) is illustrated below with the aid of excerpts from the previously referenced Westinghouse publication and sections of the WESTEMS™ User's Manual .

The following paragraphs are based on, or taken directly from, Westinghouse publication PVP2010-25891:

Performing a fatigue evaluation per ASME Code Section III, Subsection NB-3222.4 (NB-3222.4) requires calculating the stress differences for each type of stress cycle in accordance with NB-3216. In determining the number of cycles for each type of stress cycle, consideration is given to the superposition of cycles from various stress cycles that produce a total stress range greater than that of each individual stress cycle alone. This procedure is outlined in NB-3222.4(e) (5), Step 1. The resulting cycles and alternating stress intensities from this procedure are then applied in a cumulative manner using the appropriate design fatigue curve, in NB-3222.4(e) (5), Steps 3-6, to calculate fatigue usage factors. In traditional ASME Section III Code fatigue evaluations, the extremes of the stress cycle have been selected by the analyst based on experience and review of the stress component and/or stress intensity histories produced by the various transients.

The stress state selection method incorporated in WESTEMS™ fatigue evaluations employs a stress intensity based approach that is a practical method used to interpret and apply NB-3216.2. It can capture Primary plus Secondary stress and Total stress ranges for complex transients, allowing for the proper application of NB-3222.4. The approach emulates considerations employed by analysts for decades in applying various calculation methods to NB-3200 requirements.

The method used by WESTEMS™ to select the stress peak and valley times utilizes a straightforward mathematical process to select times where the stress states are at a relative minimum or maximum. Additionally, the method employs controlled options that provide the ability to control the treatment of initial condition stress states in the selection process.

The basic algorithm used by WESTEMS™ is as follows. For each transient cycle in the component fatigue evaluation, the six stress components of Primary plus Secondary stress and of Total stress are calculated for the entire transient time history. Then the stress intensities for the Primary plus Secondary stress and the Total stress time histories are calculated. Relative maxima and minima within the Primary plus Secondary stress and Total stress time histories for each transient are identified using the second derivative test (comparing the slopes of the stress history around a time point).

It is important to note that in following an NB-3216.2 procedure, the analyst is to pick a time point where stress conditions are known to be extreme and then find the maximum stress component range relative to this extreme. Using the stress intensity based approach, the time points where stress conditions are extreme are picked at the relative stress peaks and valleys, or maximum and minimum stress states along the stress intensity time history. Effectively, NB-3216.2 calculates stress component ranges from chosen extreme stress component states, where the stress intensity based approach picks extreme stress states based on stress intensity, which is a good indicator of stress component and related principal stress difference extremities. The stress intensity based approach identifies the time points of these extremes, then calculates stress component ranges, the principal stress ranges, and finally the resulting stress intensity range between two selected stress states using the corresponding component stresses at those time points (not the values of stress intensity used to select those points in time as extremes). This is consistent with the procedure used in NB-3216.2. In summary, the stress intensity time histories for each transient are used to select relative extremes, and the component stresses at those extremes are used in calculating stress ranges with other stress states that were selected in the same manner. This procedure is performed for both the Primary plus Secondary and Total stress time histories for all transients considered in the evaluation. Specific examples illustrating the approach are provided in Westinghouse publication PVP2010-25891.

The following discussion is based on and provides specific references to sections of the WESTEMS™ User's Manual. The proprietary WESTEMS™ User's Manual ~~will be~~ ***was*** made available for NRC review during the ~~next~~ ***February 8, 2011*** phase of the WESTEMS™ audit.

The WESTEMS™ stress peak and valley selection algorithm that follows the approach described in the Westinghouse publication PVP2010-25891 is described in section 14.0 of the WESTEMS™ User's Manual, Volume 2. The process used by WESTEMS™ is designed to find all of the inflection points (also known as maxima and minima) in the controlling stress intensity histories. It considers the ASME Section III Code Total stress and Primary plus Secondary stress time histories, since both may influence the fatigue usage calculation. It should be noted that, while the WESTEMS™ algorithm uses the stress intensity history to find the times of the stress peaks and valleys, the individual components of stress available for the stress model are retained at the time points selected, so that the stress range pairs in the fatigue evaluation may be calculated based on the ASME Code Section III methodology. In the WESTEMS™ User's Manual, Volume 2, the general term "peaks" is used to refer to the set of inflection points that include the stress peak and valley stress states in a transient.

The WESTEMS™ algorithm is generally designed to ensure that no valid stress peaks are missed, and so it may, in many cases, conservatively select the number of stress peaks. Therefore, as discussed in section 8.1.3 of the WESTEMS™ User's Manual, Volume 2, the software program permits the analyst to provide inputs, such as stress filter and time constant merge parameters, to attempt to eliminate redundant or unnecessary stress peaks. In the WESTEMS™ design analysis mode, the results are dependent on the analyst time-history input. Therefore, the analyst has ultimate control over the stress peaks used in the fatigue evaluation, to the extent of final editing of the stress peaks selected by the program using the WESTEMS™ stress peak editing tool, which is described in section 8.11 of the User's Manual. The fatigue evaluation is independently verified by another analyst and approved by a manager.

Since the WESTEMS™ algorithm selects stress peaks and valleys consistent with the criteria in ASME Code Section III, Subsections NB-3216 and NB-3222.4, as described above, and the user controls are used to reduce WESTEMS™ program conservatism and do not change the overall basis for the stress peak selection, the final WESTEMS™ fatigue evaluations are performed consistent with the criteria in ASME Code Section III, Subsections NB-3216 and NB-3222.4.

Audit Question No. 6:

The response to "Bullet # 5" on Page 14 of Enclosure A of December 21, 2010 PSEG Letter LR-N10-0445 stated that the stress models used in the governing EAF analyses are the same as the stress models employed in the WESTEMS™ online monitoring tool. Based on the discussions during the February 8, 2011 audit activities, it is understood that for the Salem Pressurizer Surge Nozzle Safe End to Pipe Weld location, a different version of the WESTEMS™ stress model was used for the fatigue analysis than what will be used for online fatigue monitoring. Please explain.

PSEG Response:

As a result of performing the benchmark calculation for the Unit 2 Pressurizer Surge Nozzle Safe End to Pipe Weld, it was discovered that the WESTEMS™ online model was different than that used for calculating the 60 Year cumulative usage fatigue (CUF) value for this location, which is listed in LRA Table 4.3.7-2, "Salem Unit 2 60-Year Environmentally-Assisted Fatigue Results". Therefore, we are revising our RAI response to Bullet # 5 on page 14 in Enclosure A of PSEG Letter LR-N10-0445, dated December 21, 2010, as follows, starting with the last sentence on page 14:

> The stress models used in these EAF analyses are the same as the stress models employed in the WESTEMS™ online monitoring tool, ***with the exception of the Salem Pressurizer Surge Nozzle Safe End to Pipe Weld location and the Surge Line Hot Leg Nozzle to Pipe Weld location. The stress models used in the EAF analyses for these two locations are specific to each Salem Unit due to slight physical differences that were explained under Bullet # 1 [in PSEG Letter LR-N10-0445]. However, for online fatigue monitoring, Salem used a stress model common to both Units that was determined to be conservative and bounding for each of these two locations.***

It was verified that the original statement made in PSEG Letter LR-N10-0445 relative to the stress models being the same is correct for all other monitored locations at Salem.

Enclosure B
Update to License Renewal Commitment List

As a result of this response, the commitments discussed above are added to LRA Table A.5, License Renewal Commitment List as commitment numbers 53 and 54 as shown below. Note that the item that had been designated as commitment 53 in PSEG letter LR-N11-0042 has been deleted and the other two commitments have been renumbered. Deletions from text in letter LR-N11-0042 are shown with ~~strikethrough~~ format and additions are shown in ***bolded italics***. Any other actions described in this letter are not regulatory commitments and are described for the NRC staff's information:

A.5 License Renewal Commitment List

No.	Program or Topic	Commitment	UFSAR Supplement Location (LRA App. A)	Enhancement or Implementation Schedule	Source
~~53~~	~~Salem Fatigue Calculations for WESTEMS™ Monitored Locations~~	~~Salem will revise the fatigue calculations for all locations monitored at Salem Units 1 and 2 to provide written explanation and justification of any user intervention applied for any WESTEMS™ "Design CUF" module analyses including the user intervention applied to the stress peak and valley selection.~~	~~N/A~~	~~At least 2 years prior to the period of extended operation.~~	~~Salem Letter LR-N11-0042~~
~~54~~***53***	Salem Fatigue Calculations using WESTEMS™ program	Salem will include written explanation and justification of any user intervention in future evaluations using the WESTEMS "Design CUF" ***(NB-3200*** module***)***.	~~N/A~~ ***A.4.3.7***	Within 60 days of issuance of the renewed operating license.	Salem Letter LR-N11-0042 ***Salem Letter LR-N11-0057***
~~55~~***54***	Salem Fatigue Calculations using WESTEMS™ program	Salem will not use or implement the NB-3600 option (module) of the WESTEMS™ program in future online fatigue monitoring and design calculations.	~~N/A~~ ***A.4.3.7***	Within 60 days of issuance of the renewed operating license.	Salem Letter LR-N11-0042 ***Salem Letter LR-N11-0057***

Enclosure C

"Method for Selecting Stress States for Use in an NB-3200 Fatigue Analysis,"
Proceedings of the ASME 2010 Pressure Vessels & Piping Division / K-PVP Conference,
July 18-22, 2010, Bellevue, Washington, USA (7 pages)

Proceedings of the ASME 2010 Pressure Vessels & Piping Division / K-PVP Conference
PVP 2010
July 18-22, 2010, Bellevue, Washington, USA

PVP2010-25891

METHOD FOR SELECTING STRESS STATES FOR USE IN AN NB-3200 FATIGUE ANALYSIS

Thomas L. Meikle V
Westinghouse Electric Company LLC
Monroeville, PA, USA

E. Lyles Cranford III
Westinghouse Electric Company LLC
Monroeville, PA, USA

Mark A. Gray
Westinghouse Electric Company LLC
Monroeville, PA, USA

ABSTRACT

In ASME Code Section III NB-3222.4 fatigue evaluations, selecting stress states to determine the stress cycles according to Section NB-3216.2, Varying Principal Stress Direction, can become a challenging and complex task if the transient stress conditions are the result of multiple independent time varying stressors. This paper will describe an automated method that identifies the relative minimum and maximum stress states in a component's transient stress time history and fulfills the criteria of NB-3216.2 and NB-3222.4. Utilization of the method described ensures that all meaningful stress states are identified in each transient's stress time history. The method is very effective in identifying the maximum total stress range that can occur between any real or postulated transient stress time histories. In addition, the method ensures that the maximum primary plus secondary stress range is also identified, even if it is out of phase with the total stress maxima and minima. The method includes a process to determine if a primary plus secondary stress relative minimum or maximum should be considered in addition to those stress states identified in the total stress time history. The method is suitable for use in design analysis applications as well as in on-line stress and fatigue monitoring

INTRODUCTION/BACKGROUND

Traditionally, the task of selecting stress states for consideration in fatigue analysis was considered a relatively simple and straightforward process. This was true in large part because of:

a) the simplicity of the design transients, and

b) simplifying assumptions that were introduced during the qualification process.

Now, as analytical capabilities have improved, we are able to more precisely model postulated design transient conditions. In the past, when analytical capabilities were more expensive, simplifications were employed to reduce costs and shorten design times. These simplifications would use methods like lumping external loads into minimum and maximum states and creating groups of enveloped transient conditions to achieve the desired effects. In general, this approach is acceptable for situations with a small number of loading conditions and little or no differences in the response characteristics to the loads. However, when the loading conditions are defined in a very complex manner, as is the case with some components in a PWR, this approach is not necessarily easy to apply to satisfy the analytical requirements in NB-3216.2 and NB-3222.4. Some reasons why these simplifications can fail are as follows:

a) Complex transient time histories typically have many more significant stress states per global transient cycle than the simplified transients.
b) Complex transients may have significantly varying local thermal conditions within one global cycle of the transient.
c) Complex transients produce primary plus secondary stresses that are at times out of phase with the total stress.

Subsection NB-3216.2 explains the method for calculating alternating stress intensity for cases where the directions of the principal stresses can change during the stress cycle at the location being considered. This method for computing stress differences is described as permitting the principal stresses to change direction while still maintaining their identity as they rotate.

Performing a fatigue evaluation per NB-3222.4 requires calculating the stress differences for each type of stress cycle in accordance to NB-3216. In determining the number of cycles for each type of stress cycle, consideration is given to the superposition of cycles from various stress cycles that produce a total stress range greater than that of each individual stress cycle alone. This procedure is outlined in NB-3222.4(e) (5), Step 1. The resulting cycles and alternating stress intensities from this procedure are then applied in a cumulative manner using the appropriate design fatigue curve, in NB-3222.4(e) (5), Steps 3-6, to calculate fatigue usage factors.

To meet the requirements of subsection NB-3216.2, one would first compute the total stress component time histories for the complete transient cycle, considering all loading conditions and structural discontinuities. Then, a point in time during the transient cycle must be chosen when stress conditions are known to be extreme (either maximum or minimum). The stress components associated with this time point are then subtracted from the corresponding stress components for every time in the transient cycle. The result is a stress component range history relative to one extreme of the transient cycle. From these component stress ranges, principal stresses and the resulting stress differences are calculated for each point in time for the transient cycle. The alternating stress intensity is half of the largest absolute magnitude of the stress intensity range time history. This procedure must be repeated for each transient cycle to be considered for the component.

To calculate the correct alternating stress intensity to use with the design fatigue curve from a computed total stress range, an additional factor that must be considered is the satisfaction of NB-3222.2 for that specific total stress range. If the primary plus secondary stress range corresponding to the total stress range fails to meet the 3Sm criteria set by NB-3222.2, then the Sa used with the design fatigue curve must be increased by a penalty factor, Ke, as part of the simplified elastic-plastic analysis requirements of NB-3228.5. This mandates that primary plus secondary stress range history and total stress range history must be computed for each transient cycle using the procedure described in NB-3216.2.

Also, because primary plus secondary stress is influenced by different properties of the component location, the time when its magnitude is at an extreme may not be the same time point as the extreme for the total stress history of the single point where fatigue usage is being calculated for the component. The magnitude of the primary plus secondary stress at this maximum, and the associated total stress at the same time, may produce a more conservative alternating stress in the forthcoming fatigue analysis. In this case, at least two separate total stress ranges resulting from the same event must be considered in computing the applicable alternating stress. These include at least one based on the primary plus secondary extreme time points and one based on the total stress extreme time points. After it is established which combination of total stress range and primary plus secondary stress range will produce the highest alternating stress, considering the Ke effect, the lesser alternating stress range can be neglected, since both stress ranges originated from the same event.

NOMENCLATURE

Transient Cycle: Any stress cycle experienced by a component due to a plant loading event, regardless of whether it was caused by thermal or mechanical load conditions.
Sp: Total Stress
Sn: Primary plus Secondary Stress
Salt: Alternating Stress Intensity
Sm: Material Allowable Stress
Emod: Elastic Modulus Correction Factor
Ke: NB-3228.5 Elastic-plastic Penalty Factor

TRANSIENTS VS. STRESS STATES

Depending on the location of the component analyzed, the component geometry, the location of the component within the system, and loading conditions, the stress responses from various transient cycles can be simple or complex. The superposition of various loadings, whether thermal or mechanical in origin, can make selecting an extreme time point during the transient cycle per NB-3216.2 a challenge. It is also possible that there are multiple relative maximum and minimum stress ranges that should be considered within the component fatigue evaluation. Finally, each loading condition must be evaluated per NB-3200 rules to determine if the NB-3222.2 Primary plus Secondary stress range limit is met, and the possible Ke penalty that may result. Two relatively simple transients are shown in Figure 1 and Figure 2. These two transients were arbitrarily defined to reinforce the premise of the stress intensity based method to relative maxima and minima selection, as described in the next section.

STRESS INTENSITY BASED APPROACH

Although with today's current computational power it might be possible to program an algorithm that would be a literal interpretation of NB-3216.2, there would still be some issues that would have to be resolved in selecting the correct stress ranges. Those issues include capturing the effect of the possible Ke penalty induced from a failure of NB-3222.2, and applying NB-3216.2 to a complex transient with multiple stress ranges. Westinghouse engineers have developed a repeatable method to identify all significant stress states in a given stress time history. This method does not rely on the engineer's experience but rather utilizes a straightforward mathematical process to select times where the stress states are at a relative minimum or maximum. Additionally, the method employs controlled options that provide the ability to control the treatment of initial condition stress states in the selection process.

The stress state selection method has been incorporated into Westinghouse's internally developed stress and fatigue analysis program called WESTEMS™ and is described below. The method employs a stress intensity based approach that is a

practical method used to interpret and apply NB-3216.2. It can capture primary plus secondary stress and total stress ranges for complex transients, allowing for the proper application of NB-3222.4. The approach emulates considerations employed by engineers for decades in applying various calculation methods to NB-3200 requirements.

The basic algorithm is as follows. For each transient cycle in the component fatigue evaluation, the six stress components of primary plus secondary stress and of total stress are calculated for the entire transient time history. Then the stress intensities for the primary plus secondary stress and the total stress time histories are calculated. Relative maxima and minima within the primary plus secondary stress and total stress time histories for each transient are identified using the second derivative test. Special considerations are used to address relative flat spots that are plateaus in the stress intensity time histories.

It is important to note here that in following an NB-3216.2 procedure, the analyst is to pick a time point where stress conditions are known to be extreme and then find the maximum stress component range relative to this extreme. Using the stress intensity based approach, the points where stress conditions are extreme are picked at the relative peaks and valleys, or maximum and minimum stress states along the stress intensity time history. Effectively, NB-3216.2 calculates stress component ranges from chosen extreme total stress component states, where the stress intensity based approach picks extreme stress states based on stress intensity, which is a good indicator of stress component and related principal stress difference extremities. The stress intensity based approach identifies the times of these extremes, then calculates stress component ranges, the principal stress ranges, and finally the resulting stress intensity range between two selected stress states using the corresponding component stresses at those times (not the values of stress intensity used to select those points in time as extremes). This is consistent with the procedure used in NB-3216.2. In summary, the stress intensity time histories for each transient are used to select relative extremes, and the component stresses at those extremes are used in calculating stress ranges with other stress states that were selected in the same manner. This procedure is performed for both the primary plus secondary and total stress time histories for all transients considered in the evaluation.

Several tests were performed to prove that the stress intensity approach satisfies NB-3216.2, One example problem is provided here that uses both the literal interpretation of NB-3216.2 and the stress intensity based approach to show that the resulting maximum stress range calculated between two transients would be the same. First, two arbitrary transients are defined that include a simple thermal transient (Transient 1) and a second thermal transient that also includes a varying torsion load (Transient 2). The torsion load was included in the second transient to introduce a varying principal stress direction response. Figure 1 and Figure 2 illustrate Transient 1 and Transient 2 loading conditions, respectively.

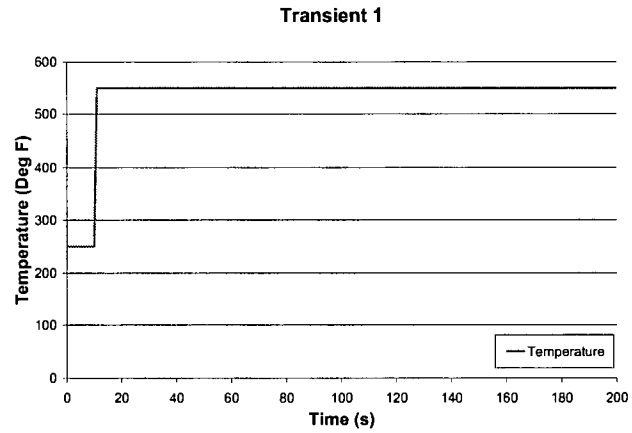

Figure 1 Loading Conditions for Transient 1

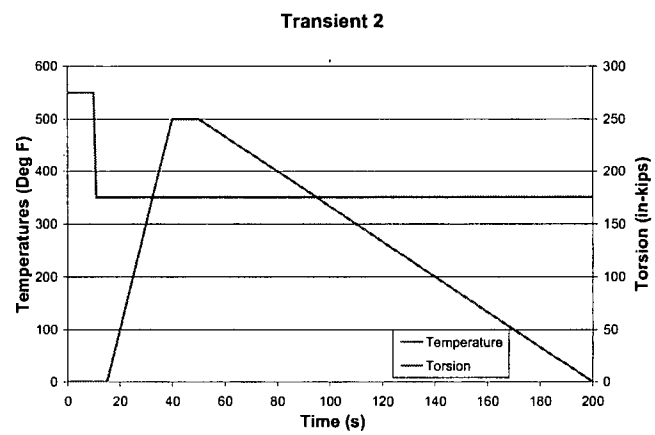

Figure 2 Loading Conditions for Transient 2

After the total stress component histories for each transient are calculated, the process of selecting the largest total stress range was conducted using both methodologies. A rigorous analysis using the procedure described in NB-3216.2 was performed to calculate the maximum local component stress ranges relative to each time step within the transient and between the two transients. For Transient 1, the maximum stress intensity range occurred at 13 seconds. For Transient 2, the maximum stress intensity ranges occurred at 13 seconds and 40 seconds. Refer to Figure 3 and Figure 4 for total stress component time histories of Transient 1 and Transient 2, respectively.

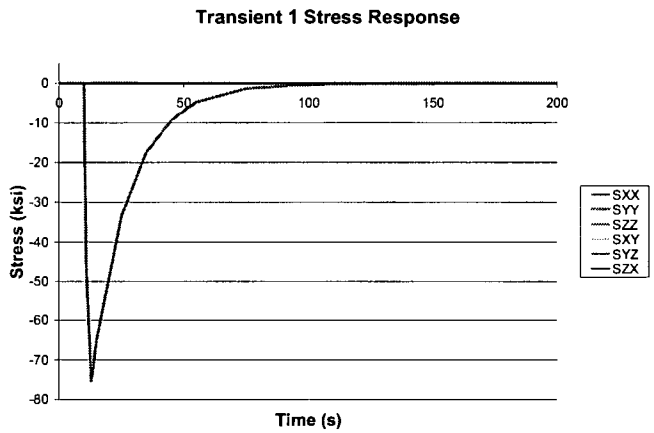

Figure 3 Total Stress Component Time History - Transient 1

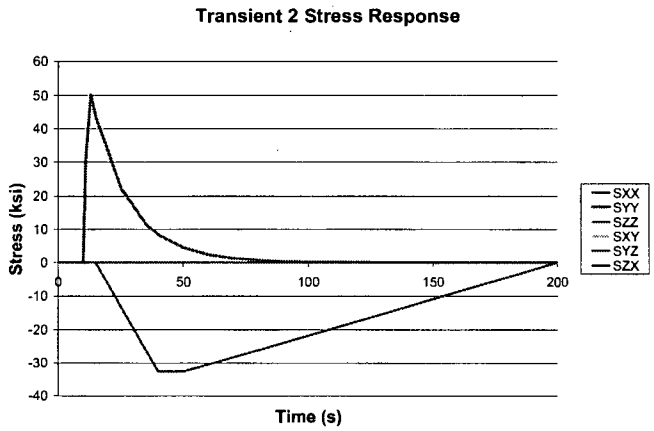

Figure 4 Total Stress Component Time History -Transient 2

When the relative stress component ranges, principal stress ranges, and the resulting stress intensity ranges were computed between transients, the two relative maximum stress intensity ranges occurred between Transient 1 at 13 seconds and Transient 2 at 13 seconds, and also between Transient 1 at 13 seconds and Transient 2 at 40 seconds.

Table 1 NB-3216.2 - Relative Stress Intensity Range Results

Trans. 1- 2 Stress Difference Relative to Trans. 1 at 13 sec.							
Time	SXX	SYY	SZZ	SXY	SYZ	SZX	SI
0	0.08	-75.21	-75.30	0.00	0.00	-0.02	75.38
10	0.08	-75.21	-75.30	0.00	0.00	-0.02	75.38
11	0.08	-106.29	-106.39	0.00	0.00	-0.03	106.47
13	0.13	-125.35	-125.51	0.00	0.00	-0.04	125.64
15	0.14	-118.74	-118.90	0.00	0.00	-0.03	119.04
25	0.11	-97.62	-97.75	0.00	13.04	-0.03	110.84
35	0.10	-86.92	-87.05	0.00	26.09	-0.02	113.16
40	0.09	-83.61	-83.74	0.00	32.61	-0.02	116.38

Trans. 1- 2 Stress Difference Relative to Trans. 1 at 13 sec.							
Time	SXX	SYY	SZZ	SXY	SYZ	SZX	SI
50	0.09	-79.63	-79.75	0.00	32.61	-0.02	112.39
60	0.08	-77.57	-77.69	0.00	30.44	-0.02	108.15
70	0.08	-76.48	-76.59	0.00	28.26	-0.02	104.87
80	0.08	-75.89	-76.00	0.00	26.09	-0.02	102.11
90	0.08	-75.52	-75.62	0.00	23.91	-0.02	99.56
110	0.08	-75.30	-75.40	0.00	19.57	-0.02	94.99
130	0.08	-75.25	-75.35	0.00	15.22	-0.02	90.60
150	0.08	-75.20	-75.30	0.00	10.87	-0.02	86.20
190	0.08	-75.21	-75.30	0.00	2.17	-0.02	77.51
200	0.08	-75.21	-75.30	0.00	0.00	-0.02	75.38

The process of locating the local relative maximum stress ranges was then conducted using the stress intensity based approach. After the total stress intensity histories were calculated, the program algorithm was run to select the local stress intensity peaks and valleys. Relative maxima and minima within the total stress intensity time histories for each transient were identified using the second derivative test. Figure 5 and Figure 6 illustrate the stress intensity time histories for Transient 1 and Transient 2. The peak and valley times selected using the stress intensity based approach are summarized in Table 2.

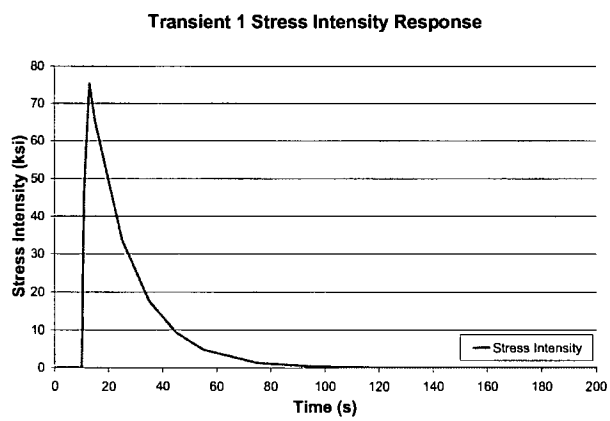

Figure 5 Total Stress Intensity Time History for Transient 1

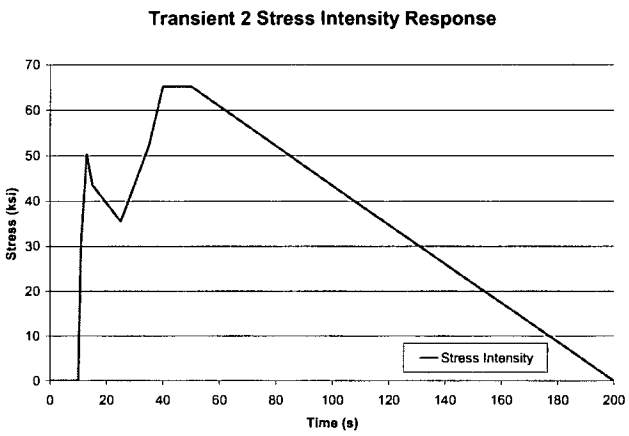

Figure 6 Total Stress Intensity Time History for Transient 2

Table 2 Selected Maxima and Minima - Stress Intensity Method

Time	Transient	SI
13	1	75.38700
15	1	65.48500
195	1	0.00100
0	2	0.00500
13	2	50.25200
25	2	35.49900
40	2	65.22001
50	2	65.22000
200	2	0.00600

Once the peaks were selected using the stress intensity based approach, all possible pairings of maxima and minima were calculated to reveal those that would yield the highest total stress intensity range. This was done by calculating the component stress ranges between the selected stress state times, computing the principal stress ranges, and the resulting stress intensity ranges. The two highest stress intensity ranges are shown in Table 3.

Table 3 Maximum Stress Intensity Range Results - Stress Intensity Based Approach

Trans_B	Time_B	Trans_A	Time_A	SI
2	13	1	13	125.64
2	40	1	13	116.38

A simple comparison between Table 1 and Table 3 reveals that the stress intensity based approach yields the same results as the approach used in NB-3216.2. In the ensuing fatigue evaluation, the cycles for each stress intensity range would be assigned based on the approach described in NB-3222.4.

PRIMARY PLUS SECONDARY STRESS CONSIDERATION

As described in the introduction, a circumstance that can arise is the possibility of the primary plus secondary stress time history lagging the total stress time history. This is because primary plus secondary stress is influenced more by properties like section thickness and geometric and material discontinuities, and can have a slower stress response that the total stress at a point. The WESTEMS™ program implementing the method stores the primary plus secondary stress components and the total stress components for each stress state time selected, regardless of whether it was selected based on primary plus secondary or total stress. This is because when two stress states pair in NB-3222.4, the primary plus secondary stress range of that pair must be measured against NB-3222.2 limits, and any resulting Ke penalty must be applied to the total stress intensity range of that pair to calculate the alternating stress. The example problem below illustrates how WESTEMS™ incorporates primary plus secondary stress into its algorithm to calculate alternating stress.

If two stress states were selected because the primary plus secondary was out of phase but was caused by the same event, then one of the stress states can be disregarded. This can only be done once it is determined which stress state is contributing to the pair resulting in the higher alternating stress. Then, the stress state associated with the lesser alternating stress is disregarded.

If, for a specific component, it is known that the total stress state is always controlling, the program also has the option to automatically disregard the primary plus secondary peak/valley based on a time constant. If there is a primary plus secondary peak/valley within a specified time relative to the total stress peak/valley, then the primary plus secondary stress peak/valley will be disregarded. The time constant for a location can be approximated by evaluating a transient composed of only thermal stress and reviewing the primary plus secondary stress and total stress responses. The period between these two peaks/valleys would be a good initial estimate of the time constant.

Example Problem

This example problem illustrates a simple example of when a peak/valley time chosen from primary plus secondary stress can actually be the controlling stress state over the total stress peak/valley for an event. Figure 7 and Figure 8 below illustrate the loading conditions within two arbitrary transients.

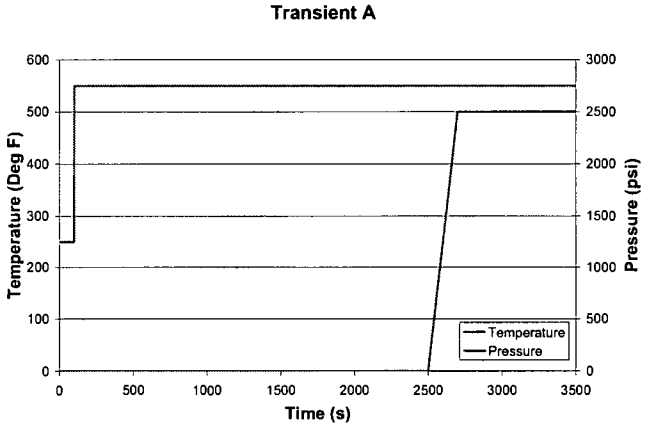

Figure 7 Loading Conditions for Transient A

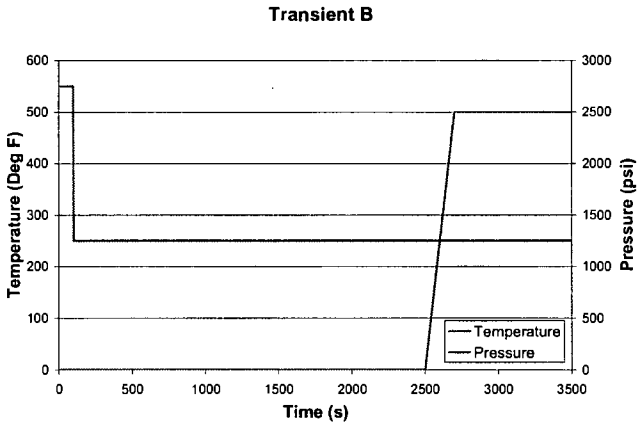

Figure 8 Loading Conditions for Transient B

A stress model of a thick-walled component was used to evaluate these transients. A thick-walled component was chosen because it will increase the primary plus secondary stress lag behind total stress for a thermal excursion. The primary plus secondary and total stress component histories are shown in Figure 9 and Figure 10 for transient A and transient B, respectively. The stress intensity responses for these two transients are shown in Figure 11 and Figure 12. The peak/valley times were selected using the stress intensity based approach for primary plus secondary stress and total stress histories. A summary of the peaks/valleys selected can be seen in Table 4.

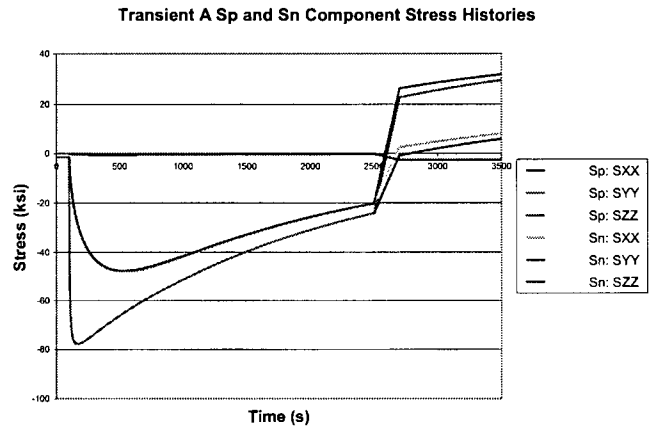

Figure 9 Transient A Sp and Sn Component Stress Histories

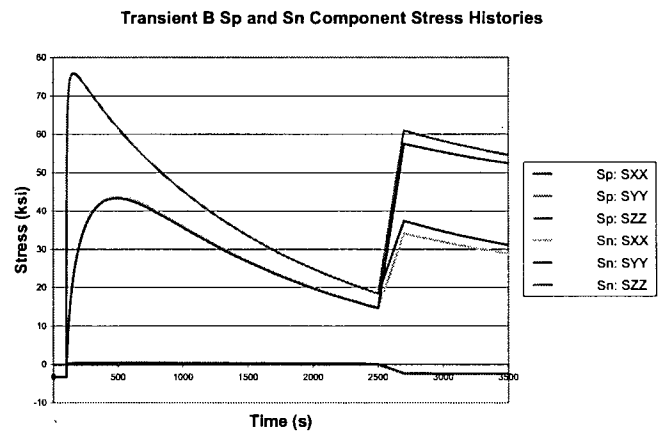

Figure 10 Transient B Sp and Sn Component Stress Histories

Table 4 Fatigue Significant Peaks and Valleys*

Trans. A Peak Time (s)	Sp (ksi)	Sn (ksi)
0	1	1
167	78	28
531	65	48
3500	32	34

Trans. B Peak Time (s)	Sp (ksi)	Sn (ksi)
0	3	3
158	76	24
496	62	43
2500	18	15
2700	63	60
3500	57	55

* See Figure 11 and Figure 12

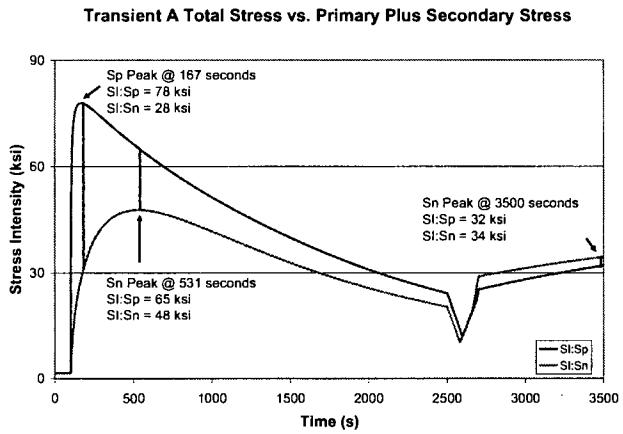

Figure 11 Sp and Sn Stress Intensity Responses for Transient A

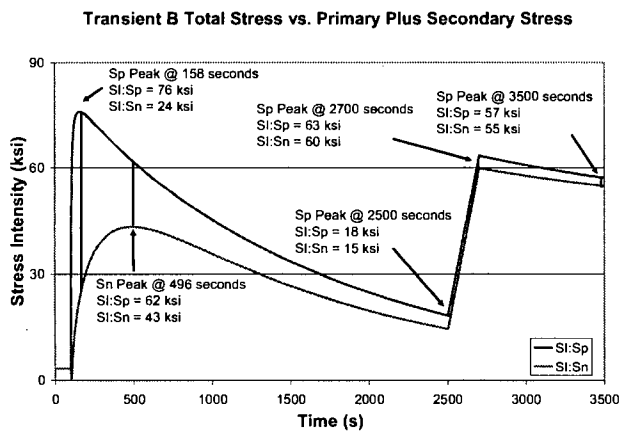

Figure 12 Sp and Sn Stress Intensity Responses for Transient B

From Figure 11 and Figure 12, it is not clear which stress state pairs would result in the highest alternating stress range. The algorithm employed by WESTEMS™ automatically calculates the actual primary plus secondary stress and total stress ranges, based on the stress components, for each possible pair to reveal which stress state pairs would result in the highest alternating stress intensity. Table 5 summarizes the stress state pairs that result in the highest alternating stress intensity, Sa.

Table 5 Alternating Stress Intensity

Trans.	Time	Trans	Time	3Sm	Sn	Ke	Sp	Emod	Salt
A	531	B	2700	60	107	3.3	129	1.05	226
A	167	B	3500	60	83	2.3	135	1.04	160
B	0	B	158	53	27	1	79	1.1	55
B	496	A	0	58	45	1	63	1.06	37
A	3500	B	2500	57	24	1	24	1.07	14

Note: All recorded time is in seconds and stress is in ksi

From Table 5, it can be seen that a pair including a peak selected from a primary plus secondary stress intensity peak resulted in the highest alternating stress intensity. This is because of the primary plus secondary stress range and the resulting Ke penalty, which significantly increased the total alternating stress intensity calculated for that pair. This illustrates the importance of considering both stress quantifies in the selection of peak/valley times to consider in the fatigue analysis.

CONCLUSIONS

The stress state selection method described here is notable because it is a repeatable process that can be taught and applied using automated methods. The method improves the overall quality of the work performed because the method ensures that all significant states are identified in the stress time histories. While it is possible to apply the method manually using graphing techniques, the method is best implemented using an automated process. Because the method is easily automated, it is ideal for use in both design calculations as well as in an online monitoring role.

ACKNOWLEDGMENTS

The authors wish to acknowledge the significant contributions made by Dr. C. Y. Yang and A. L. Thurman, who helped to develop and refine the method described in this paper.

REFERENCES

[1] ASME Boiler and Pressure Vessel Code, Section III, Division 1, Subsection NB, 2007, "Rules for Construction of Nuclear Facility Components, Class 1 Components," American Society of Mechanical Engineers, New York.

Entergy New Contention NYS-38/RK-TC-5
Attachment 9

Entergy

Entergy Nuclear Northeast
Indian Point Energy Center
450 Broadway, GSB
P.O. Box 249
Buchanan, NY 10511-0249
Tel (914) 788-2055

Fred Dacimo
Vice President
License Renewal

NL-10-063

July 14, 2010

U.S. Nuclear Regulatory Commission
Attn: Document Control Desk
Washington, DC 20555-0001

SUBJECT: Amendment 9 to License Renewal Application (LRA) - Reactor Vessel Internals Program
Indian Point Nuclear Generating Unit Nos. 2 & 3
Docket Nos. 50-247 and 50-286
License Nos. DPR-26 and DPR-64

REFERENCES:

1. Entergy Letter dated April 23, 2007, F. R. Dacimo to Document Control Desk, "License Renewal Application" (NL-07-039)
2. Entergy Letter dated April 23, 2007, F. R. Dacimo to Document Control Desk, "License Renewal Application Boundary Drawings (NL-07-040)
3. Entergy Letter dated April 23, 2007, F. R. Dacimo to Document Control Desk, "License Renewal Application Environmental Report References (NL-07-041)
4. Entergy Letter dated October 11, 2007, F. R, Dacimo to Document Control Desk, "License Renewal Application (LRA)" (NL-07-124)
5. Entergy Letter November 14, 2007, F. R, Dacimo to Document Control Desk, "Supplement to License Renewal Application (LRA) Environmental Report References" (NL-07-133)

Dear Sir or Madam:

In the referenced letters, Entergy Nuclear Operations, Inc. applied for renewal of the Indian Point Energy Center operating license. This letter contains Amendment 9 to the License Renewal Application (LRA) regarding the Reactor Vessel Internals Program.

If you have any questions, or require additional information, please contact Mr. Robert Walpole at 914-734-6710.

I declare under penalty of perjury that the foregoing is true and correct. Executed on 7-14-2010.

Sincerely,

FRD/dmt

Attachment: 1. Amendment 9 to License Renewal Application – Reactor Vessel Internals Program

cc: Mr. Samuel J. Collins, Regional Administrator, NRC Region I
Mr. Sherwin E. Turk, NRC Office of General Counsel, Special Counsel
Mr. John Boska, NRR Senior Project Manager
Ms. Kimberly Green, Project Manager
NRC Resident Inspector's Office
Mr. Paul Eddy, New York State Department of Public Service
Mr. Francis J. Murray, President and CEO, NYSERDA

ATTACHMENT 1 TO NL-10-063

Amendment 9 to License Renewal Application -
Reactor Vessel Internals Program

ENTERGY NUCLEAR OPERATIONS, INC.
INDIAN POINT NUCLEAR GENERATING UNIT NOS. 2 & 3
DOCKET NOS. 50-247 AND 50-286
LICENSE NOS. DPR-26 AND DPR-64

INDIAN POINT NUCLEAR GENERATING UNIT NOS. 2 AND 3
LICENSE RENEWAL APPLICATION (LRA)
AMMENDMENT 9

The LRA is revised as described below. (underline – added, strikethrough – deleted)

2.3.1.2 Reactor Vessel Internals

The reactor vessel internals for each unit are described in the reactor coolant system description (Unit 2, Reactor Vessel Internals; Unit 3, Reactor Vessel Internals).

For both units, the lower core support structure, the upper core support structure, and the incore instrumentation support structure are the three major parts of the reactor internals.

Lower Core Support Structure

The major member of the reactor vessel internals is the lower core support structure consisting of the following components included in this evaluation.

core baffle/former assembly: bolts
core baffle/former assembly: plates
core barrel assembly: bolts, screws
core barrel assembly: axial flexure plates (thermal shield flexures), flange, ring, shell, thermal shield, lower core barrel flange weld, upper core barrel flange weld
core barrel assembly: outlet nozzles
lower internals assembly: clevis insert bolt
lower internals assembly: clevis insert
lower internals assembly: intermediate diffuser plate
lower internals assembly: fuel alignment pin
lower internals assembly: lower core plate
lower internals assembly: lower core support plate column sleeves
lower internals assembly: lower core support column bolt
lower internals assembly, lower core support column castings: column cap, lower core support
lower internals assembly: radial key
lower internals assembly: secondary core support (energy absorbing device)
specimen guides (not subject to aging management review)
specimen plugs (installed in IP2 only; not subject to aging management review)

The lower core support structure is supported at its upper flange from a ledge in the reactor vessel. Within the core barrel are a core baffle and a lower core plate, both of which are attached to the core barrel wall. The lower core support structure provides passageways for the coolant flow. The lower core plate at the bottom of the core below the baffle plates provides support and orientation for the fuel assemblies. Fuel alignment pins (two for each assembly) are also inserted into this plate. Columns are placed between the lower core plate and core support casting in order to provide stiffness and to transmit the core load to the core support casting. Adequate coolant distribution is obtained through the use of the lower core plate and a diffuser plate.

Upper Core Support Structure

The "top hat with deep beam features" upper core support structure consists of the following components included in this evaluation.

upper internals assembly, rod control cluster assembly (RCCA) guide tube assembly: bolts
upper internals assembly, RCCA guide tube assembly: guide tube (including lower flange weld), guide plates
upper internals assembly, RCCA guide tube assembly: support pin
upper internals assembly: core plate alignment pin
upper internals assembly: head/vessel alignment pin
upper internals assembly: hold-down spring
upper internals assembly: support column
upper internals assembly, mixing devices: support column orifice base, support column mixer
upper internals assembly: upper core plate, fuel alignment pin
upper internals assembly: support assembly (including ring), upper support plate
upper internals assembly: upper support column bolt

The support columns establish the spacing between the upper support assembly and the upper core plate and are fastened at top and bottom to these plates and beams.

The RCCA guide tube assemblies shield and guide the control rod drive shafts and control rods. They are fastened to the upper support and are guided by pins in the upper core plate for proper orientation and support. Additional guidance for the control rod drive shafts is provided by the control rod shroud tube which is attached to the upper support plate and guide tube.

In-Core Instrumentation Support Structure

The in-core instrumentation support structures consist of the following components included in this evaluation.

thermocouple conduit
flux thimble guide tube
bottom mounted instrumentation column

An upper system (thermocouple conduit) is used to convey and support thermocouples penetrating the vessel through the head, and a lower system (flux thimble guide tube) is used to convey and support flux thimbles penetrating the vessel through the bottom.

The upper system utilizes the reactor vessel head penetrations. Instrumentation port columns are slip-connected to in-line columns that are in turn fastened to the upper support plate. These port columns protrude through the head penetrations. The thermocouples are carried through these port columns and the upper support plate at positions above their readout locations. The thermocouple conduits are supported from the columns of the upper core support system.

Table 2.3.1-2-IP2 and Table 2.3.1-2-IP3 list the mechanical components subject to aging management review and component intended functions for the reactor vessel internals.

Table 3.1.2-2-IP2 and Table 3.1.2-2-IP3 provide the results of the aging management review for the reactor vessel internals.

Table 2.3.1-4-IP2
Reactor Vessel Internals
Components Subject to Aging Management Review

Component Type	Intended Function
Lower Core Support Structure	
Core baffle/former assembly •bolts	Structural support
Core baffle/former assembly •plates	Structural support Flow distribution Shielding
Core barrel assembly •bolts and screws	Structural support
~~Core barrel assembly~~ ~~•axial flexure plates~~ ~~•flange~~ ~~•ring~~ ~~•shell~~ ~~•thermal shield~~	~~Structural support~~ ~~Flow distribution~~ ~~Shielding~~
Core barrel assembly • axial flexure plates (thermal shield flexures)	Structural support
Core barrel assembly • flange	Structural support
Core barrel assembly • ring • shell • thermal shield	Structural support Flow distribution Shielding
Core barrel assembly • lower core barrel flange weld • upper core barrel flange weld	Structural support

Core barrel assembly •outlet nozzles	Flow distribution
Lower internals assembly •clevis insert bolt •clevis insert •fuel alignment pin •lower core support plate column sleeves •lower core support plate column bolt •radial key	Structural support
Lower internals assembly •intermediate diffuser plate	Flow distribution
Lower internals assembly •lower core plate •lower core support castings •column cap •lower core support •secondary core support	Structural support Flow distribution
Upper Core Support Structure—Upper Internals Assembly	
~~RCCA guide tube assembly~~ ~~•bolt~~ ~~•guide tube~~ ~~•support pin~~	~~Structural support~~
RCCA guide tube assembly •bolt	Structural support
RCCA guide tube assembly •guide tube (including lower flange welds)	Structural support
RCCA guide tube assembly •guide plates	Structural support
RCCA guide tube assembly •support pin	Structural support

Core plate alignment pin	Structural support
Head / vessel alignment pin	Structural support
Hold-down spring	Structural support
Mixing devices •support column orifice base •support column mixer	Structural support Flow distribution
Support column	Structural support
Upper core plate, fuel alignment pin	Structural support Flow distribution
Upper support plate, support assembly (including ring)	Structural support
Upper support column bolt	Structural support
Incore Instrumentation Support Structure	
Bottom mounted instrumentation column	Structural support
Flux thimble guide tube	Structural support
Thermocouple conduit	Structural support

3.1.2.1.2 Reactor Vessel Internals

Materials

Reactor vessel internals components are constructed of the following materials.

- cast austenitic stainless steel
- nickel alloy
- stainless steel

Environment

Reactor vessel internals components are exposed to the following environments.

- neutron fluence
- treated borated water
- treated borated water > 140°F
- treated borated water > 482°F

Aging Effects Requiring Management

The following aging effects associated with the reactor vessel internals require management.

- change in dimensions
- cracking
- cracking – fatigue
- loss of material
- loss of material – wear
- loss of preload
- reduction of fracture toughness

Aging Management Programs

The following aging management programs manage the aging effects for reactor vessel internals components.

- Inservice Inspection
- Thermal Aging and Neutron Irradiation Embrittlement of Cast Austenitic Stainless Steel (CASS)
- Reactor Vessel Internals
- Water Chemistry Control – Primary and Secondary

3.1.2.2.6 Loss of Fracture Toughness due to Neutron Irradiation Embrittlement and Void Swelling

Loss of fracture toughness due to neutron irradiation embrittlement and change in dimensions (void swelling) ~~could occur~~ in stainless steel and nickel alloy reactor vessel internals components exposed to reactor coolant and neutron flux will be managed by the Reactor Vessel Internals (RVI) Program. The RVI Program will implement the EPRI Pressurized Water Reactor Internals Inspection and Evaluation Guidelines, MRP-227. The RVI Program will use nondestructive examinations (NDE) and other inspection methods to manage aging effects for reactor vessel internals. ~~To manage loss of fracture toughness in vessel internals components, IPEC will (1) participate in the industry programs for investigating and managing aging effects on reactor internals; (2) evaluate and implement the results of the industry programs as applicable to the reactor internals; and (3) upon completion of these programs, but not less than 24 months before entering the period of extended operation, submit an inspection plan for reactor internals to the NRC for review and approval. This commitment is included in the UFSAR Supplement, Appendix A, Sections A.2.1.41 and A.3.1.41.~~

3.1.2.2.9 Loss of Preload due to Stress Relaxation

Loss of preload due to thermal stress relaxation (creep) would only be a concern in very high temperature applications (> 700°F) as stated in the ASME Code, Section II, Part D, Table 4. No IPEC internals components operate at > 700°F. Therefore, loss of preload due to thermal stress relaxation (creep) is not an applicable aging effect for the reactor vessel internals components. However, irradiation-enhanced creep (irradiation creep) or irradiation enhanced stress relaxation (ISR) is an athermal process that depends on the neutron fluence and stress; and, on void swelling if present. ~~Nevertheless~~ Therefore, loss of preload of stainless steel and nickel alloy reactor vessel internals components will be managed by the Reactor Vessel Internals (RVI) Program. The RVI Program will implement the EPRI Pressurized Water Reactor Internals Inspection and Evaluation Guidelines, MRP-227. The RVI Program will use nondestructive examinations (NDE) and other inspection methods to manage aging effects for reactor vessel internals. ~~to the extent that industry developed reactor vessel internals aging management programs address these aging effects. The IPEC commitment to these RVI programs is included in UFSAR Supplement, Appendix A, Sections A.2.1.41 and A.3.1.41.~~

3.1.2.2.15 Changes in Dimensions due to Void Swelling

Changes in dimensions due to void swelling ~~could occur~~ in stainless steel and nickel alloy reactor internal components exposed to reactor coolant will be managed by the Reactor Vessel Internals (RVI) Program. The RVI Program will implement the EPRI Pressurized Water Reactor Internals Inspection and Evaluation Guidelines, MRP-227. The RVI Program will use nondestructive examinations (NDE) and other inspection methods to manage aging effects for reactor vessel internals. ~~To manage changes in dimensions of vessel internals components, IPEC will (1) participate in the industry programs for investigating and managing aging effects on reactor internals; (2) evaluate and implement the results of the industry programs as~~

~~applicable to the reactor internals; and (3) upon completion of these programs, but not less than 24 months before entering the period of extended operation, submit an inspection plan for reactor internals to the NRC for review and approval. This commitment is included in the UFSAR Supplement, Appendix A, Sections A.2.1.41 and A.3.1.41.~~

3.1.2.2.17 Cracking due to Stress Corrosion Cracking, Primary Water Stress Corrosion Cracking, and Irradiation-Assisted Stress Corrosion Cracking

Cracking due to stress corrosion cracking (SCC), primary water stress corrosion cracking (PWSCC), and irradiation-assisted stress corrosion cracking (IASCC) ~~could occur~~ in PWR stainless steel and nickel alloy reactor vessel internals components will be managed by the Reactor Vessel Internals (RVI) Program. The RVI Program will implement the EPRI Pressurized Water Reactor Internals Inspection and Evaluation Guidelines, MRP-227. The RVI Program will use nondestructive examinations (NDE) and other inspection methods to manage aging effects for reactor vessel internals. ~~To manage cracking in vessel internals components, IPEC maintains the Water Chemistry Control – Primary and Secondary Program and will (1) participate in the industry programs for investigating and managing aging effects on reactor internals; (2) evaluate and implement the results of the industry programs as applicable to the reactor internals; and (3) upon completion of these programs, but not less than 24 months before entering the period of extended operation, submit an inspection plan for reactor internals to the NRC for review and approval. The IPEC commitment to these RVI programs is included in UFSAR Supplement, Appendix A, Sections A.2.1.41 and A.3.1.41.~~

Table 3.1.1
Summary of Aging Management Programs for the Reactor Coolant System Evaluated in Chapter IV of NUREG-1801

Table 3.1.1: Reactor Coolant System, NUREG-1801 Vol. 1					
Item Number	**Component**	**Aging Effect/ Mechanism**	**Aging Management Programs**	**Further Evaluation Recommended**	**Discussion**
3.1.1-22	Stainless steel and nickel alloy reactor vessel internals components exposed to reactor coolant and neutron flux	Loss of fracture toughness due to neutron irradiation embrittlement, void swelling	FSAR supplement commitment to (1) participate in industry RVI aging programs (2) implement applicable results (3) submit for NRC approval > 24 months before the extended period an RVI inspection plan based on industry recommendation.	No, but licensee commitment to be confirmed	~~Consistent with NUREG-1801.~~ Loss of fracture toughness of stainless steel and nickel alloy reactor vessel internals components will be managed by the Reactor Vessel Internals Program. ~~aging management programs. The commitment to these RVI programs is included in UFSAR Supplement, Appendix A, Sections A.2.1.41 and A.3.1.41.~~ See Section 3.1.2.2.6.

Table 3.1.1: Reactor Coolant System, NUREG-1801 Vol. 1

Item Number	Component	Aging Effect/ Mechanism	Aging Management Programs	Further Evaluation Recommended	Discussion
3.1.1-27	Stainless steel and nickel alloy reactor vessel internals screws, bolts, tie rods, and hold-down springs	Loss of preload due to stress relaxation	FSAR supplement commitment to (1) participate in industry RVI aging programs (2) implement applicable results (3) submit for NRC approval > 24 months before the extended period an RVI inspection plan based on industry recommendation.	No, but licensee commitment to be confirmed	Loss ~~of preload due to stress relaxation (creep) is a concern for applications at temperatures higher than those of IPEC reactor vessel and internals components. Therefore, loss of preload due to stress relaxation (creep) is not an applicable aging effect for the reactor vessel internals components. Nevertheless, loss~~ of preload of stainless steel and nickel alloy reactor vessel internals components will be managed by the Reactor Vessel Internals Program. ~~consistent with industry developed reactor vessel internals aging management programs. The commitment to these RVI programs is included in UFSAR Supplement, Appendix A, Sections A.2.1.41 and A.3.1.41.~~ See Section 3.1.2.2.9.

Table 3.1.1: Reactor Coolant System, NUREG-1801 Vol. 1

Item Number	Component	Aging Effect/ Mechanism	Aging Management Programs	Further Evaluation Recommended	Discussion
3.1.1-30	Stainless steel reactor vessel internals components (e.g., Upper internals assembly, RCCA guide tube assemblies, Baffle/former assembly, Lower internal assembly, shroud assemblies, Plenum cover and plenum cylinder, Upper grid assembly, Control rod guide tube (CRGT) assembly, Core support shield assembly, Core barrel assembly, Lower grid assembly, Flow distributor assembly, Thermal shield, Instrumentation support structures)	Cracking due to stress corrosion cracking, irradiation-assisted stress corrosion cracking	Water Chemistry and FSAR supplement commitment to (1) participate in industry RVI aging programs (2) implement applicable results (3) submit for NRC approval > 24 months before the extended period an RVI inspection plan based on industry recommendation.	No, but licensee commitment needs to be confirmed	~~Consistent with NUREG-1801.~~ Cracking of stainless steel reactor vessel internals components will be managed by the Water Chemistry Control – Primary and Secondary Program and either the Reactor Vessel Internals Program or the Inservice Inspection Program. ~~by other RVI aging management programs. The commitment to these other RVI programs is included in UFSAR Supplement, Appendix A, Sections A.2.1.41 and A.3.1.41.~~ See Section 3.1.2.2.12.

Table 3.1.1: Reactor Coolant System, NUREG-1801 Vol. 1

Item Number	Component	Aging Effect/ Mechanism	Aging Management Programs	Further Evaluation Recommended	Discussion
3.1.1-33	Stainless steel and nickel alloy reactor vessel internals components	Changes in dimensions due to void swelling	FSAR supplement commitment to (1) participate in industry RVI aging programs (2) implement applicable results (3) submit for NRC approval > 24 months before the extended period an RVI inspection plan based on industry recommendation.	No, but licensee commitment to be confirmed	~~Consistent with NUREG-1801.~~ Changes in dimensions of stainless steel and nickel alloy reactor vessel internals components will be managed by the Reactor Vessel Internals Program. ~~RVI aging management programs. The commitment to these RVI programs is included in UFSAR Supplement, Appendix A, Sections A.2.1.41 and A.3.1.41.~~ See Section 3.1.2.2.15.

Table 3.1.1: Reactor Coolant System, NUREG-1801 Vol. 1

Item Number	Component	Aging Effect/ Mechanism	Aging Management Programs	Further Evaluation Recommended	Discussion
3.1.1-37	Stainless steel and nickel alloy reactor vessel internals components (e.g., Upper internals assembly, RCCA guide tube assemblies, Lower internal assembly, CEA shroud assemblies, Core shroud assembly, Core support shield assembly, Core barrel assembly, Lower grid assembly, Flow distributor assembly)	Cracking due to stress corrosion cracking, primary water stress corrosion cracking, irradiation-assisted stress corrosion cracking	Water Chemistry and FSAR supplement commitment to (1) participate in industry RVI aging programs (2) implement applicable results (3) submit for NRC approval > 24 months before the extended period an RVI inspection plan based on industry recommendation.	No, but licensee commitment needs to be confirmed	~~Consistent with NUREG-1801.~~ Cracking of stainless steel and nickel alloy reactor vessel internals components will be managed by the Water Chemistry Control – Primary and Secondary Program and either the Reactor Vessel Internals Program or the Inservice Inspection Program. ~~by other RVI aging management programs. The commitment to these other RVI programs is included in UFSAR Supplement, Appendix A, Sections A.2.1.41 and A.3.1.41.~~ See Section 3.1.2.2.17.

Table 3.1.1: Reactor Coolant System, NUREG-1801 Vol. 1

Item Number	Component	Aging Effect/ Mechanism	Aging Management Programs	Further Evaluation Recommended	Discussion
3.1.1-63	Steel reactor vessel flange, stainless steel and nickel alloy reactor vessel internals exposed to reactor coolant (e.g., upper and lower internals assembly, CEA shroud assembly, core support barrel, upper grid assembly, core support shield assembly, lower grid assembly)	Loss of material due to wear	Inservice Inspection (IWB, IWC, and IWD)	No	The Inservice Inspection Program and the Reactor Vessel Internals Program manages loss of material due to wear of the steel reactor vessel flange and stainless steel and nickel alloy reactor vessel internals components.

~~NOTES FOR TABLES 3.1.2-1-IP2 THROUGH 3.1.2-4-IP3~~

Generic Notes

A. Consistent with NUREG-1801 item for component, material, environment, aging effect and aging management program. AMP is consistent with NUREG-1801 AMP.

B. Consistent with NUREG-1801 item for component, material, environment, aging effect and aging management program. AMP has exceptions to NUREG-1801 AMP.

C. Component is different, but consistent with NUREG-1801 item for material, environment, aging effect and aging management program. AMP is consistent with NUREG-1801 AMP.

D. Component is different, but consistent with NUREG-1801 item for material, environment, aging effect and aging management program. AMP has exceptions to NUREG-1801 AMP.

E. Consistent with NUREG-1801 material, environment, and aging effect but a different aging management program is credited.

F. Material not in NUREG-1801 for this component.

G. Environment not in NUREG-1801 for this component and material.

H. Aging effect not in NUREG-1801 for this component, material and environment combination.

I. Aging effect in NUREG-1801 for this component, material and environment combination is not applicable.

J. Neither the component nor the material and environment combination is evaluated in NUREG-1801.

Plant-Specific Notes

101. This component, material, environment and aging effect combination is considered in the Reactor Vessel Internals Program. As documented in MRP-227, the basis for the RVI Program, this combination warrants no additional aging management. ~~NUREG-1801, Section XI.M16 states: "No further aging management review is necessary if the applicant provides a commitment in the FSAR supplement to (1) participate in the industry programs for investigating and managing aging effects on reactor internals; (2) evaluate and implement the results of the industry programs as applicable to the reactor internals; and (3) upon completion of these programs, but not less than 24 months before entering the period of extended operation, submit an inspection plan for reactor internals to the NRC for review and approval." IPEC commitment can be found in Appendix A (UFSAR supplement) of the license renewal application.~~

102. This item is considered a match to NUREG-1801 even though the environments are different because the aging effect of cracking due to fatigue is independent of the environment.
103. These components are subject to cracking due to fatigue as identified in the generic entry in the first line of this table.
104. The One-Time Inspection Program will verify effectiveness of the Water Chemistry Control – Primary and Secondary Program.
105. The original inconel guide tube support pins (split pins) were replaced in both units with X-750 pins. The IP3 X-750 split pins, in service since 1987, were replaced in 2009 with stainless steel pins. The IP2 X-750 pins, installed in 1995, remain in service. Future pin replacements will be based on the pin design, industry experience, manufacturer recommendations and plant specific considerations.

Table 3.1.2-2-IP2
Reactor Vessel Internals
Summary of Aging Management Review

Table 3.1.2-2-IP2: Reactor Vessel Internals								
Component Type	**Intended Function**	**Material**	**Environment**	**Aging Effect Requiring Management**	**Aging Management Programs**	**NUREG-1801 Vol. 2 Item**	**Table 1 Item**	**Notes**
Reactor vessel internals components	Structural support	Stainless steel, CASS, nickel alloy	Treated borated water	Cracking – fatigue	TLAA – metal fatigue	IV.B2-31 (R-53)	3.1.1-5	A
Lower Core Support Structure								
Core baffle/former assembly • bolts	Structural support	Stainless steel	Treated borated water > 140°F	Change in dimensions	Reactor Vessel Internals ~~RVI commitment~~	IV.B2-4 (R-126)	3.1.1-33	E ~~A~~, 101
				Cracking	Water Chemistry Control – Primary and Secondary Reactor Vessel Internals ~~RVI commitment~~	IV.B2-10 (R-125)	3.1.1-30	E ~~A, 101~~
				Loss of material	Water Chemistry Control – Primary and Secondary	IV.B2-32 (RP-24)	3.1.1-83	A

Table 3.1.2-2-IP2: Reactor Vessel Internals

Component Type	Intended Function	Material	Environment	Aging Effect Requiring Management	Aging Management Programs	NUREG-1801 Vol. 2 Item	Table 1 Item	Notes
				Loss of preload	Reactor Vessel Internals ~~RVI commitment~~	IV.B2-5 (R-129)	3.1.1-27	E ~~A~~, 101
			Treated borated water > 140°F Neutron fluence	Reduction of fracture toughness	Reactor Vessel Internals ~~RVI commitment~~	IV.B2-6 (R-128)	3.1.1-22	E ~~A~~, 101
Core baffle/former assembly • plates	Structural support Flow distribution Shielding	Stainless steel	Treated borated water > 140°F	Change in dimensions	Reactor Vessel Internals ~~RVI commitment~~	IV.B2-1 (R-124)	3.1.1-33	E ~~A, 101~~
				Cracking	Water Chemistry Control – Primary and Secondary Reactor Vessel Internals ~~RVI commitment~~	IV.B2-2 (R-123)	3.1.1-30	E ~~A, 101~~
				Loss of material	Water Chemistry Control – Primary and Secondary	IV.B2-32 (RP-24)	3.1.1-83	A
			Treated borated water > 140°F Neutron fluence	Reduction of fracture toughness	Reactor Vessel Internals ~~RVI commitment~~	IV.B2-3 (R-127)	3.1.1-22	E ~~A~~, 101

Table 3.1.2-2-IP2: Reactor Vessel Internals

Component Type	Intended Function	Material	Environment	Aging Effect Requiring Management	Aging Management Programs	NUREG-1801 Vol. 2 Item	Table 1 Item	Notes
Core barrel assembly • bolts and screws	Structural support	Stainless steel	Treated borated water > 140°F	Change in dimensions	Reactor Vessel Internals ~~RVI commitment~~	IV.B2-4 (R-126)	3.1.1-33	E ~~C~~, 101
				Cracking	Water Chemistry Control – Primary and Secondary Reactor Vessel Internals ~~RVI commitment~~	IV.B2-10 (R-125)	3.1.1-30	E ~~A, 101~~
				Loss of material	Water Chemistry Control – Primary and Secondary	IV.B2-32 (RP-24)	3.1.1-83	A
				Loss of preload	Reactor Vessel Internals ~~RVI commitment~~	IV.B2-5 (R-129)	3.1.1-27	E ~~A~~, 101
			Treated borated water > 140°F Neutron fluence	Reduction of fracture toughness	Reactor Vessel Internals ~~RVI commitment~~	IV.B2-6 (R-128)	3.1.1-22	E ~~A~~, 101

Table 3.1.2-2-IP2: Reactor Vessel Internals

Component Type	Intended Function	Material	Environment	Aging Effect Requiring Management	Aging Management Programs	NUREG-1801 Vol. 2 Item	Table 1 Item	Notes
Core barrel assembly • axial flexure plates (thermal shield flexures)	Structural support ~~Flow distribution Shielding~~	Stainless steel	Treated borated water > 140°F	Change in dimensions	Reactor Vessel Internals ~~RVI commitment~~	IV.B2-7 (R-121)	3.1.1-33	E ~~A~~, 101
				Cracking	Water Chemistry Control – Primary and Secondary Reactor Vessel Internals ~~RVI commitment~~	IV.B2-8 (R-120)	3.1.1-30	E ~~A, 101~~
				Loss of material	Water Chemistry Control – Primary and Secondary	IV.B2-32 (RP-24)	3.1.1-83	A
				Loss of material – wear	Reactor Vessel Internals	IV.B2-26 (R-142)	3.1.1-63	E
			Treated borated water > 140°F Neutron fluence	Reduction of fracture toughness	Reactor Vessel Internals ~~RVI commitment~~	IV.B2-9 (R-122)	3.1.1-22	E ~~A~~, 101

Table 3.1.2-2-IP2: Reactor Vessel Internals

Component Type	Intended Function	Material	Environment	Aging Effect Requiring Management	Aging Management Programs	NUREG-1801 Vol. 2 Item	Table 1 Item	Notes
Core barrel assembly • flange	Structural support ~~Flow distribution~~ ~~Shielding~~	Stainless steel	Treated borated water > 140°F	Change in dimensions	Reactor Vessel Internals ~~RVI commitment~~	IV.B2-7 (R-121)	3.1.1-33	E ~~A~~, 101
				Cracking	Water Chemistry Control – Primary and Secondary Reactor Vessel Internals ~~RVI commitment~~	IV.B2-8 (R-120)	3.1.1-30	E ~~A, 101~~
				Loss of material	Water Chemistry Control – Primary and Secondary	IV.B2-32 (RP-24)	3.1.1-83	A
				Loss of material – wear	Inservice Inspection	IV.B2-34 (R-115)	3.1.1-63	E
			Treated borated water > 140°F Neutron fluence	Reduction of fracture toughness	Reactor Vessel Internals ~~RVI commitment~~	IV.B2-9 (R-122)	3.1.1-22	E ~~A~~, 101

Table 3.1.2-2-IP2: Reactor Vessel Internals

Component Type	Intended Function	Material	Environment	Aging Effect Requiring Management	Aging Management Programs	NUREG-1801 Vol. 2 Item	Table 1 Item	Notes
Core barrel assembly • ring • shell • thermal shield	Structural support Flow distribution Shielding	Stainless steel	Treated borated water > 140°F	Change in dimensions	Reactor Vessel Internals ~~RVI commitment~~	IV.B2-7 (R-121)	3.1.1-33	E ~~A~~, 101
				Cracking	Water Chemistry Control – Primary and Secondary Reactor Vessel Internals ~~RVI commitment~~	IV.B2-8 (R-120)	3.1.1-30	E ~~A~~, 101
				Loss of material	Water Chemistry Control – Primary and Secondary	IV.B2-32 (RP-24)	3.1.1-83	A
			Treated borated water > 140°F Neutron fluence	Reduction of fracture toughness	Reactor Vessel Internals ~~RVI commitment~~	IV.B2-9 (R-122)	3.1.1-22	E ~~A~~, 101

Table 3.1.2-2-IP2: Reactor Vessel Internals

Component Type	Intended Function	Material	Environment	Aging Effect Requiring Management	Aging Management Programs	NUREG-1801 Vol. 2 Item	Table 1 Item	Notes
Core barrel assembly • lower core barrel flange weld • upper core barrel flange weld	Structural support	Stainless steel	Treated borated water > 140°F	Change in dimensions	Reactor Vessel Internals	IV.B2-7 (R-121)	3.1.1-33	E, 101
				Cracking	Water Chemistry Control – Primary and Secondary Reactor Vessel Internals	IV.B2-8 (R-120)	3.1.1-30	E
				Loss of material	Water Chemistry Control – Primary and Secondary	IV.B2-32 (RP-24)	3.1.1-83	A
			Treated borated water > 140°F Neutron fluence	Reduction of fracture toughness	Reactor Vessel Internals	IV.B2-9 (R-122)	3.1.1-22	E, 101

Table 3.1.2-2-IP2: Reactor Vessel Internals

Component Type	Intended Function	Material	Environment	Aging Effect Requiring Management	Aging Management Programs	NUREG-1801 Vol. 2 Item	Table 1 Item	Notes
Core barrel assembly • outlet nozzles	Flow distribution	Stainless steel	Treated borated water > 140°F	Change in dimensions	Reactor Vessel Internals ~~RVI commitment~~	IV.B2-7 (R-121)	3.1.1-33	E ~~A~~, 101
				Cracking	Water Chemistry Control – Primary and Secondary Reactor Vessel Internals ~~RVI commitment~~	IV.B2-8 (R-120)	3.1.1-30	E ~~A, 101~~
				Loss of material	Water Chemistry Control – Primary and Secondary	IV.B2-32 (RP-24)	3.1.1-83	A

Table 3.1.2-2-IP2: Reactor Vessel Internals

Component Type	Intended Function	Material	Environment	Aging Effect Requiring Management	Aging Management Programs	NUREG-1801 Vol. 2 Item	Table 1 Item	Notes
Lower internals assembly • clevis insert bolt	Structural support	Nickel alloy	Treated borated water	Change in dimensions	Reactor Vessel Internals ~~RVI commitment~~	IV.B2-15 (R-134)	3.1.1-33	E ~~A~~, 101
				Cracking	Water Chemistry Control – Primary and Secondary Reactor Vessel Internals ~~RVI commitment~~	IV.B2-16 (R-133)	3.1.1-37	E ~~A~~, 101
				Loss of material	Water Chemistry Control – Primary and Secondary	IV.B2-32 (RP-24)	3.1.1-83	A
				Loss of preload	Reactor Vessel Internals ~~RVI commitment~~	IV.B2-14 (R-137)	3.1.1-27	E ~~A~~, 101
			Treated borated water Neutron fluence	Reduction of fracture toughness	Reactor Vessel Internals ~~RVI commitment~~	IV.B2-17 (R-135)	3.1.1-22	E ~~A~~, 101

Table 3.1.2-2-IP2: Reactor Vessel Internals

Component Type	Intended Function	Material	Environment	Aging Effect Requiring Management	Aging Management Programs	NUREG-1801 Vol. 2 Item	Table 1 Item	Notes
Lower internals assembly • clevis insert	Structural support	Nickel alloy	Treated borated water	Change in dimensions	Reactor Vessel Internals ~~RVI commitment~~	IV.B2-19 (R-131)	3.1.1-33	E ~~A~~, 101
				Cracking	Water Chemistry Control – Primary and Secondary Reactor Vessel Internals ~~RVI commitment~~	IV.B2-20 (R-130)	3.1.1-37	E ~~A~~, 101
				Loss of material	Water Chemistry Control – Primary and Secondary	IV.B2-32 (RP-24)	3.1.1-83	A
				Loss of material – wear	Inservice Inspection	IV.B2-26 (R-142)	3.1.1-63	E

Table 3.1.2-2-IP2: Reactor Vessel Internals

Component Type	Intended Function	Material	Environment	Aging Effect Requiring Management	Aging Management Programs	NUREG-1801 Vol. 2 Item	Table 1 Item	Notes
Lower internals assembly • intermediate diffuser plate	Flow distribution	Stainless steel	Treated borated water > 140°F	Change in dimensions	Reactor Vessel Internals ~~RVI commitment~~	IV.B2-19 (R-131)	3.1.1-33	E ~~C~~, 101
				Cracking	Water Chemistry Control – Primary and Secondary Reactor Vessel Internals ~~RVI commitment~~	IV.B2-20 (R-130)	3.1.1-37	E ~~C~~, 101
				Loss of material	Water Chemistry Control – Primary and Secondary	IV.B2-32 (RP-24)	3.1.1-83	A

Table 3.1.2-2-IP2: Reactor Vessel Internals

Component Type	Intended Function	Material	Environment	Aging Effect Requiring Management	Aging Management Programs	NUREG-1801 Vol. 2 Item	Table 1 Item	Notes
Lower internals assembly • fuel alignment pin	Structural support	Stainless steel	Treated borated water > 140°F	Change in dimensions	Reactor Vessel Internals ~~RVI commitment~~	IV.B2-15 (R-134)	3.1.1-33	E ~~A~~, 101
				Cracking	Water Chemistry Control – Primary and Secondary Reactor Vessel Internals ~~RVI commitment~~	IV.B2-16 (R-133)	3.1.1-37	E ~~A~~, 101
				Loss of material	Water Chemistry Control – Primary and Secondary	IV.B2-32 (RP-24)	3.1.1-83	A
			Treated borated water > 140°F Neutron fluence	Reduction of fracture toughness	Reactor Vessel Internals ~~RVI commitment~~	IV.B2-17 (R-135)	3.1.1-22	E ~~A~~, 101

Table 3.1.2-2-IP2: Reactor Vessel Internals

Component Type	Intended Function	Material	Environment	Aging Effect Requiring Management	Aging Management Programs	NUREG-1801 Vol. 2 Item	Table 1 Item	Notes
Lower internals assembly • lower core plate	Structural support Flow distribution	Stainless steel	Treated borated water > 140°F	Change in dimensions	Reactor Vessel Internals ~~RVI commitment~~	IV.B2-19 (R-131)	3.1.1-33	E ~~A~~, 101
				Cracking	Water Chemistry Control – Primary and Secondary ~~RVI commitment~~ Inservice Inspection	IV.B2-20 (R-130)	3.1.1-37	E ~~A, 101~~
				Loss of material	Water Chemistry Control – Primary and Secondary	IV.B2-32 (RP-24)	3.1.1-83	A
				Loss of material – wear	Inservice Inspection	IV.B2-26 (R-142)	3.1.1-63	E
			Treated borated water > 140°F Neutron fluence	Reduction of fracture toughness	Reactor Vessel Internals ~~RVI commitment~~	IV.B2-18 (R-132)	3.1.1-22	E ~~A~~, 101

Table 3.1.2-2-IP2: Reactor Vessel Internals

Component Type	Intended Function	Material	Environment	Aging Effect Requiring Management	Aging Management Programs	NUREG-1801 Vol. 2 Item	Table 1 Item	Notes
Lower internals assembly • lower core support castings - column cap - lower core support column bodies	Structural support Flow distribution	CASS	Treated borated water > 482°F	Change in dimensions	Reactor Vessel Internals ~~RVI commitment~~	IV.B2-23 (R-139)	3.1.1-33	E ~~A~~, 101
				Cracking	Water Chemistry Control – Primary and Secondary Reactor Vessel Internals ~~RVI commitment~~	IV.B2-24 (R-138)	3.1.1-30	E ~~A, 101~~
				Loss of material	Water Chemistry Control – Primary and Secondary	IV.B2-32 (RP-24)	3.1.1-83	A
			Treated borated water > 482°F Neutron fluence	Reduction of fracture toughness	Thermal Aging and Neutron Irradiation Embrittlement of Cast Austenitic Stainless Steel (CASS)	IV.B2-21 (R-140)	3.1.1-80	A

Table 3.1.2-2-IP2: Reactor Vessel Internals

Component Type	Intended Function	Material	Environment	Aging Effect Requiring Management	Aging Management Programs	NUREG-1801 Vol. 2 Item	Table 1 Item	Notes
Lower internals assembly • lower core support plate column bolt	Structural support	Stainless steel	Treated borated water > 140°F	Change in dimensions	Reactor Vessel Internals ~~RVI commitment~~	IV.B2-15 (R-134)	3.1.1-33	E ~~A~~, 101
				Cracking	Water Chemistry Control – Primary and Secondary Reactor Vessel Internals ~~RVI commitment~~	IV.B2-16 (R-133)	3.1.1-37	E ~~A, 101~~
				Loss of material	Water Chemistry Control – Primary and Secondary	IV.B2-32 (RP-24)	3.1.1-83	A
				Loss of preload	Reactor Vessel Internals ~~RVI commitment~~	IV.B2-25 (R-136)	3.1.1-27	E ~~A~~, 101
			Treated borated water > 140°F Neutron fluence	Reduction of fracture toughness	Reactor Vessel Internals ~~RVI commitment~~	IV.B2-17 (R-135)	3.1.1-22	E ~~A~~, 101

Table 3.1.2-2-IP2: Reactor Vessel Internals

Component Type	Intended Function	Material	Environment	Aging Effect Requiring Management	Aging Management Programs	NUREG-1801 Vol. 2 Item	Table 1 Item	Notes
Lower internals assembly • lower core support plate column sleeves	Structural support	Stainless steel	Treated borated water > 140°F	Change in dimensions	Reactor Vessel Internals ~~RVI commitment~~	IV.B2-23 (R-139)	3.1.1-33	E ~~A~~, 101
				Cracking	Water Chemistry Control – Primary and Secondary Reactor Vessel Internals ~~RVI commitment~~	IV.B2-24 (R-138)	3.1.1-30	E ~~A~~, 101
				Loss of material	Water Chemistry Control – Primary and Secondary	IV.B2-32 (RP-24)	3.1.1-83	A
			Treated borated water > 140°F Neutron fluence	Reduction of fracture toughness	Reactor Vessel Internals ~~RVI commitment~~	IV.B2-22 (R-141)	3.1.1-22	E ~~A~~, 101

Table 3.1.2-2-IP2: Reactor Vessel Internals

Component Type	Intended Function	Material	Environment	Aging Effect Requiring Management	Aging Management Programs	NUREG-1801 Vol. 2 Item	Table 1 Item	Notes
Lower internals assembly • radial key	Structural support	Stainless steel	Treated borated water > 140°F	Change in dimensions	Reactor Vessel Internals ~~RVI commitment~~	IV.B2-19 (R-131)	3.1.1-33	E ~~A~~, 101
				Cracking	Water Chemistry Control – Primary and Secondary Reactor Vessel Internals ~~RVI commitment~~	IV.B2-20 (R-130)	3.1.1-37	E ~~A~~, 101
				Loss of material	Water Chemistry Control – Primary and Secondary	IV.B2-32 (RP-24)	3.1.1-83	A
				Loss of material – wear	Inservice Inspection	IV.B2-26 (R-142)	3.1.1-63	E

Table 3.1.2-2-IP2: Reactor Vessel Internals

Component Type	Intended Function	Material	Environment	Aging Effect Requiring Management	Aging Management Programs	NUREG-1801 Vol. 2 Item	Table 1 Item	Notes
Lower internals assembly • secondary core support	Structural support Flow distribution	Stainless steel	Treated borated water > 140°F	Change in dimensions	Reactor Vessel Internals ~~RVI commitment~~	IV.B2-19 (R-131)	3.1.1-33	E ~~C~~, 101
				Cracking	Water Chemistry Control – Primary and Secondary Reactor Vessel Internals ~~RVI commitment~~	IV.B2-20 (R-130)	3.1.1-37	E ~~C~~, 101
				Loss of material	Water Chemistry Control – Primary and Secondary	IV.B2-32 (RP-24)	3.1.1-83	A

Table 3.1.2-2-IP2: Reactor Vessel Internals

Component Type	Intended Function	Material	Environment	Aging Effect Requiring Management	Aging Management Programs	NUREG-1801 Vol. 2 Item	Table 1 Item	Notes
Upper Core Support Structure - Upper Internals Assembly								
RCCA guide tube assembly • bolt	Structural support	Stainless steel	Treated borated water > 140°F	Change in dimensions	Reactor Vessel Internals ~~RVI commitment~~	IV.B2-27 (R-119)	3.1.1-33	E ~~A~~, 101
				Cracking	Water Chemistry Control – Primary and Secondary Reactor Vessel Internals ~~RVI commitment~~	IV.B2-28 (R-118)	3.1.1-37	E ~~A~~, 101
				Loss of material	Water Chemistry Control – Primary and Secondary	IV.B2-32 (RP-24)	3.1.1-83	A
				Loss of preload	Reactor Vessel Internals ~~RVI commitment~~	IV.B2-38 (R-114)	3.1.1-27	E ~~C~~, 101

Table 3.1.2-2-IP2: Reactor Vessel Internals

Component Type	Intended Function	Material	Environment	Aging Effect Requiring Management	Aging Management Programs	NUREG-1801 Vol. 2 Item	Table 1 Item	Notes
RCCA guide tube assembly • guide tube (including lower flange welds)	Structural support	Stainless steel	Treated borated water > 140°F	Change in dimensions	Reactor Vessel Internals ~~RVI commitment~~	IV.B2-29 (R-117)	3.1.1-33	E ~~A~~, 101
				Cracking	Water Chemistry Control – Primary and Secondary Reactor Vessel Internals ~~RVI commitment~~	IV.B2-30 (R-116)	3.1.1-30	E ~~A~~, ~~101~~
				Loss of material	Water Chemistry Control – Primary and Secondary	IV.B2-32 (RP-24)	3.1.1-83	A

Table 3.1.2-2-IP2: Reactor Vessel Internals

Component Type	Intended Function	Material	Environment	Aging Effect Requiring Management	Aging Management Programs	NUREG-1801 Vol. 2 Item	Table 1 Item	Notes
RCCA guide tube assembly • guide plates	Structural support	Stainless steel	Treated borated water > 140°F	Change in dimensions	Reactor Vessel Internals	IV.B2-29 (R-117)	3.1.1-33	E
				Cracking	Water Chemistry Control – Primary and Secondary Reactor Vessel Internals	IV.B2-30 (R-116)	3.1.1-30	E
				Loss of material	Water Chemistry Control – Primary and Secondary	IV.B2-32 (RP-24)	3.1.1-83	A
				Loss of material – wear	Reactor Vessel Internals	IV.B2-34 (R-115)	3.1.1-63	E

Table 3.1.2-2-IP2: Reactor Vessel Internals

Component Type	Intended Function	Material	Environment	Aging Effect Requiring Management	Aging Management Programs	NUREG-1801 Vol. 2 Item	Table 1 Item	Notes
RCCA guide tube assembly • support pin	Structural support	~~Nickel alloy~~, Stainless steel	Treated borated water	Change in dimensions	Reactor Vessel Internals ~~RVI commitment~~	IV.B2-27 (R-119)	3.1.1-33	E ~~A~~, 101
				Cracking	Water Chemistry Control – Primary and Secondary Reactor Vessel Internals ~~RVI commitment~~	IV.B2-28 (R-118)	3.1.1-37	E, 105 ~~A, 101~~
				Loss of material	Water Chemistry Control – Primary and Secondary	IV.B2-32 (RP-24)	3.1.1-83	A

Table 3.1.2-2-IP2: Reactor Vessel Internals

Component Type	Intended Function	Material	Environment	Aging Effect Requiring Management	Aging Management Programs	NUREG-1801 Vol. 2 Item	Table 1 Item	Notes
Core plate alignment pin	Structural support	Stainless steel	Treated borated water > 140°F	Change in dimensions	Reactor Vessel Internals ~~RVI commitment~~	IV.B2-39 (R-113)	3.1.1-33	E ~~A~~, 101
				Cracking	Water Chemistry Control – Primary and Secondary Reactor Vessel Internals ~~RVI commitment~~	IV.B2-40 (R-112)	3.1.1-37	E ~~A~~, 101
				Loss of material	Water Chemistry Control – Primary and Secondary	IV.B2-32 (RP-24)	3.1.1-83	A
				Loss of material – wear	Inservice Inspection	IV.B2-34 (R115)	3.1.1-63	E

Table 3.1.2-2-IP2: Reactor Vessel Internals

Component Type	Intended Function	Material	Environment	Aging Effect Requiring Management	Aging Management Programs	NUREG-1801 Vol. 2 Item	Table 1 Item	Notes
Head / vessel alignment pin	Structural support	Stainless steel	Treated borated water > 140°F	Change in dimensions	Reactor Vessel Internals ~~RVI commitment~~	IV.B2-41 (R-107)	3.1.1-33	E ~~C~~, 101
				Cracking	Water Chemistry Control – Primary and Secondary Reactor Vessel Internals ~~RVI commitment~~	IV.B2-42 (R-106)	3.1.1-30	E ~~C~~, 101
				Loss of material	Water Chemistry Control – Primary and Secondary	IV.B2-32 (RP-24)	3.1.1-83	A
				Loss of material – wear	Inservice Inspection	IV.B2-34 (R115)	3.1.1-63	E

Table 3.1.2-2-IP2: Reactor Vessel Internals

Component Type	Intended Function	Material	Environment	Aging Effect Requiring Management	Aging Management Programs	NUREG-1801 Vol. 2 Item	Table 1 Item	Notes
Hold-down spring	Structural support	Stainless steel	Treated borated water > 140°F	Change in dimensions	Reactor Vessel Internals ~~RVI commitment~~	IV.B2-41 (R-107)	3.1.1-33	E ~~A~~, 101
				Cracking	Water Chemistry Control – Primary and Secondary Reactor Vessel Internals ~~RVI commitment~~	IV.B2-42 (R-106)	3.1.1-30	E ~~A~~, 101
				Loss of material	Water Chemistry Control – Primary and Secondary	IV.B2-32 (RP-24)	3.1.1-83	A
				Loss of preload	Reactor Vessel Internals ~~RVI commitment~~	IV.B2-38 (R-114)	3.1.1-27	E ~~A, 101~~

Table 3.1.2-2-IP2: Reactor Vessel Internals

Component Type	Intended Function	Material	Environment	Aging Effect Requiring Management	Aging Management Programs	NUREG-1801 Vol. 2 Item	Table 1 Item	Notes
Mixing devices • support column orifice base • support column mixer	Structural support Flow distribution	CASS	Treated borated water > 482°F	Change in dimensions	Reactor Vessel Internals ~~RVI commitment~~	IV.B2-35 (R-110)	3.1.1-33	E ~~C~~, 101
				Cracking	Water Chemistry Control – Primary and Secondary Reactor Vessel Internals ~~RVI commitment~~	IV.B2-36 (R-109)	3.1.1-30	E ~~C~~, 101
				Loss of material	Water Chemistry Control – Primary and Secondary	IV.B2-32 (RP-24)	3.1.1-83	A
			Treated borated water > 482°F Neutron fluence	Reduction of fracture toughness	Thermal Aging and Neutron Irradiation Embrittlement of Cast Austenitic Stainless Steel (CASS)	IV.B2-37 (R-111)	3.1.1-80	A

Table 3.1.2-2-IP2: Reactor Vessel Internals

Component Type	Intended Function	Material	Environment	Aging Effect Requiring Management	Aging Management Programs	NUREG-1801 Vol. 2 Item	Table 1 Item	Notes
Support column	Structural support	Stainless steel	Treated borated water > 140°F	Change in dimensions	Reactor Vessel Internals ~~RVI commitment~~	IV.B2-35 (R-110)	3.1.1-33	E ~~A~~, 101
				Cracking	Water Chemistry Control – Primary and Secondary Reactor Vessel Internals ~~RVI commitment~~	IV.B2-36 (R-109)	3.1.1-30	E ~~A~~, 101
				Loss of material	Water Chemistry Control – Primary and Secondary	IV.B2-32 (RP-24)	3.1.1-83	A
Upper core plate, fuel alignment pin	Structural support Flow distribution	Stainless steel	Treated borated water > 140°F	Change in dimensions	Reactor Vessel Internals ~~RVI commitment~~	IV.B2-39 (R-117)	3.1.1-33	E ~~A~~, 101
				Cracking	Water Chemistry Control – Primary and Secondary Reactor Vessel Internals ~~RVI commitment~~	IV.B2-40 (R-112)	3.1.1-37	E ~~A~~, 101

Table 3.1.2-2-IP2: Reactor Vessel Internals

Component Type	Intended Function	Material	Environment	Aging Effect Requiring Management	Aging Management Programs	NUREG-1801 Vol. 2 Item	Table 1 Item	Notes
				Loss of material	Water Chemistry Control – Primary and Secondary	IV.B2-32 (RP-24)	3.1.1-83	A
Upper support plate, support assembly (including ring)	Structural support	Stainless steel	Treated borated water > 140°F	Change in dimensions	Reactor Vessel Internals ~~RVI commitment~~	IV.B2-41 (R-107)	3.1.1-33	E ~~A~~, 101
				Cracking	Water Chemistry Control – Primary and Secondary Inservice Inspection ~~RVI commitment~~	IV.B2-42 (R-106)	3.1.1-30	E ~~A, 101~~
				Loss of material	Water Chemistry Control – Primary and Secondary	IV.B2-32 (RP-24)	3.1.1-83	A

Table 3.1.2-2-IP2: Reactor Vessel Internals

Component Type	Intended Function	Material	Environment	Aging Effect Requiring Management	Aging Management Programs	NUREG-1801 Vol. 2 Item	Table 1 Item	Notes
Upper support column bolt	Structural support	Stainless steel	Treated borated water > 140°F	Change in dimensions	Reactor Vessel Internals ~~RVI commitment~~	IV.B2-39 (R-113	3.1.1-33	E ~~A~~, 101
				Cracking	Water Chemistry Control – Primary and Secondary Reactor Vessel Internals ~~RVI commitment~~	IV.B2-40 (R-112)	3.1.1-37	E ~~A~~, 101
				Loss of material	Water Chemistry Control – Primary and Secondary	IV.B2-32 (RP-24)	3.1.1-83	A
				Loss of preload	Reactor Vessel Internals ~~RVI commitment~~	IV.B2-38 (R-114)	3.1.1-27	E ~~A~~, 101

Table 3.1.2-2-IP2: Reactor Vessel Internals

Component Type	Intended Function	Material	Environment	Aging Effect Requiring Management	Aging Management Programs	NUREG-1801 Vol. 2 Item	Table 1 Item	Notes
Incore Instrumentation Support Structure								
Bottom mounted instrumentation column	Structural support	Stainless steel	Treated borated water > 140°F	Change in dimensions	Reactor Vessel Internals ~~RVI commitment~~	IV.B2-11 (R-144)	3.1.1-33	E ~~A~~, 101
				Cracking	Water Chemistry Control – Primary and Secondary Reactor Vessel Internals ~~RVI commitment~~	IV.B2-12 (R-143)	3.1.1-30	E ~~A, 101~~
				Loss of material	Water Chemistry Control – Primary and Secondary	IV.B2-32 (RP-24)	3.1.1-83	A

Table 3.1.2-2-IP2: Reactor Vessel Internals

Component Type	Intended Function	Material	Environment	Aging Effect Requiring Management	Aging Management Programs	NUREG-1801 Vol. 2 Item	Table 1 Item	Notes
Flux thimble guide tube	Structural support	Stainless steel	Treated borated water > 140°F	Change in dimensions	Reactor Vessel Internals ~~RVI commitment~~	IV.B2-11 (R-144)	3.1.1-33	E ~~A~~, 101
				Cracking	Water Chemistry Control – Primary and Secondary Reactor Vessel Internals ~~RVI commitment~~	IV.B2-12 (R-143)	3.1.1-30	E ~~A~~, 101
				Loss of material	Water Chemistry Control – Primary and Secondary	IV.B2-32 (RP-24)	3.1.1-83	A
Thermocouple conduit	Structural support	Stainless steel	Treated borated water > 140°F	Change in dimensions	Reactor Vessel Internals ~~RVI commitment~~	IV.B2-11 (R-144)	3.1.1-33	E ~~C~~, 101
				Cracking	Water Chemistry Control – Primary and Secondary Reactor Vessel Internals ~~RVI commitment~~	IV.B2-12 (R-143)	3.1.1-30	E ~~C~~, 101

Table 3.1.2-2-IP2: Reactor Vessel Internals

Component Type	Intended Function	Material	Environment	Aging Effect Requiring Management	Aging Management Programs	NUREG-1801 Vol. 2 Item	Table 1 Item	Notes
				Loss of material	Water Chemistry Control – Primary and Secondary	IV.B2-32 (RP-24)	3.1.1-83	A

Table 3.1.2-2-IP3
Reactor Vessel Internals
Summary of Aging Management Review

Table 3.1.2-2-IP3: Reactor Vessel Internals								
Component Type	**Intended Function**	**Material**	**Environment**	**Aging Effect Requiring Management**	**Aging Management Programs**	**NUREG-1801 Vol. 2 Item**	**Table 1 Item**	**Notes**
Reactor vessel internals components	Structural support	Stainless steel, CASS, nickel alloy	Treated borated water	Cracking – fatigue	TLAA – metal fatigue	IV.B2-31 (R-53)	3.1.1-5	A
Lower Core Support Structure								
Core baffle/former assembly • bolts	Structural support	Stainless steel	Treated borated water > 140°F	Change in dimensions	Reactor Vessel Internals ~~RVI commitment~~	IV.B2-4 (R-126)	3.1.1-33	E ~~A~~, 101
				Cracking	Water Chemistry Control – Primary and Secondary Reactor Vessel Internals ~~RVI commitment~~	IV.B2-10 (R-125)	3.1.1-30	E ~~A, 101~~
				Loss of material	Water Chemistry Control – Primary and Secondary	IV.B2-32 (RP-24)	3.1.1-83	A

Table 3.1.2-2-IP3: Reactor Vessel Internals

Component Type	Intended Function	Material	Environment	Aging Effect Requiring Management	Aging Management Programs	NUREG-1801 Vol. 2 Item	Table 1 Item	Notes
				Loss of preload	Reactor Vessel Internals ~~RVI commitment~~	IV.B2-5 (R-129)	3.1.1-27	E ~~A~~, 101
			Treated borated water > 140°F Neutron fluence	Reduction of fracture toughness	Reactor Vessel Internals ~~RVI commitment~~	IV.B2-6 (R-128)	3.1.1-22	E ~~A~~, 101
Core baffle/former assembly • plates	Structural support Flow distribution Shielding	Stainless steel	Treated borated water > 140°F	Change in dimensions	Reactor Vessel Internals ~~RVI commitment~~	IV.B2-1 (R-124)	3.1.1-33	E ~~A, 101~~
				Cracking	Water Chemistry Control – Primary and Secondary Reactor Vessel Internals ~~RVI commitment~~	IV.B2-2 (R-123)	3.1.1-30	E ~~A, 101~~
				Loss of material	Water Chemistry Control – Primary and Secondary	IV.B2-32 (RP-24)	3.1.1-83	A
			Treated borated water > 140°F Neutron fluence	Reduction of fracture toughness	Reactor Vessel Internals ~~RVI commitment~~	IV.B2-3 (R-127)	3.1.1-22	E ~~A~~, 101

Table 3.1.2-2-IP3: Reactor Vessel Internals

Component Type	Intended Function	Material	Environment	Aging Effect Requiring Management	Aging Management Programs	NUREG-1801 Vol. 2 Item	Table 1 Item	Notes
Core barrel assembly • bolts and screws	Structural support	Stainless steel	Treated borated water > 140°F	Change in dimensions	Reactor Vessel Internals ~~RVI commitment~~	IV.B2-4 (R-126)	3.1.1-33	E ~~C~~, 101
				Cracking	Water Chemistry Control – Primary and Secondary Reactor Vessel Internals ~~RVI commitment~~	IV.B2-10 (R-125)	3.1.1-30	E ~~A, 101~~
				Loss of material	Water Chemistry Control – Primary and Secondary	IV.B2-32 (RP-24)	3.1.1-83	A
				Loss of preload	Reactor Vessel Internals ~~RVI commitment~~	IV.B2-5 (R-129)	3.1.1-27	E ~~A~~, 101
			Treated borated water > 140°F Neutron fluence	Reduction of fracture toughness	Reactor Vessel Internals ~~RVI commitment~~	IV.B2-6 (R-128)	3.1.1-22	E ~~A~~, 101

Table 3.1.2-2-IP3: Reactor Vessel Internals

Component Type	Intended Function	Material	Environment	Aging Effect Requiring Management	Aging Management Programs	NUREG-1801 Vol. 2 Item	Table 1 Item	Notes
Core barrel assembly • axial flexure plates (thermal shield flexures)	Structural support ~~Flow distribution Shielding~~	Stainless steel	Treated borated water > 140°F	Change in dimensions	Reactor Vessel Internals ~~RVI commitment~~	IV.B2-7 (R-121)	3.1.1-33	E ~~A~~, 101
				Cracking	Water Chemistry Control – Primary and Secondary Reactor Vessel Internals ~~RVI commitment~~	IV.B2-8 (R-120)	3.1.1-30	E ~~A, 101~~
				Loss of material	Water Chemistry Control – Primary and Secondary	IV.B2-32 (RP-24)	3.1.1-83	A
				Loss of material – wear	Reactor Vessel Internals	IV.B2-26 (R-142)	3.1.1-63	E
			Treated borated water > 140°F Neutron fluence	Reduction of fracture toughness	Reactor Vessel Internals ~~RVI commitment~~	IV.B2-9 (R-122)	3.1.1-22	E ~~A~~, 101

Table 3.1.2-2-IP3: Reactor Vessel Internals

Component Type	Intended Function	Material	Environment	Aging Effect Requiring Management	Aging Management Programs	NUREG-1801 Vol. 2 Item	Table 1 Item	Notes
Core barrel assembly • flange	Structural support ~~Flow distribution Shielding~~	Stainless steel	Treated borated water > 140°F	Change in dimensions	Reactor Vessel Internals ~~RVI commitment~~	IV.B2-7 (R-121)	3.1.1-33	E ~~A~~, 101
				Cracking	Water Chemistry Control – Primary and Secondary Reactor Vessel Internals ~~RVI commitment~~	IV.B2-8 (R-120)	3.1.1-30	E ~~A, 101~~
				Loss of material	Water Chemistry Control – Primary and Secondary	IV.B2-32 (RP-24)	3.1.1-83	A
				Loss of material – wear	Inservice Inspection	IV.B2-34 (R-115)	3.1.1-63	E
			Treated borated water > 140°F Neutron fluence	Reduction of fracture toughness	Reactor Vessel Internals ~~RVI commitment~~	IV.B2-9 (R-122)	3.1.1-22	E ~~A~~, 101

Table 3.1.2-2-IP3: Reactor Vessel Internals

Component Type	Intended Function	Material	Environment	Aging Effect Requiring Management	Aging Management Programs	NUREG-1801 Vol. 2 Item	Table 1 Item	Notes
Core barrel assembly • ring • shell • thermal shield	Structural support Flow distribution Shielding	Stainless steel	Treated borated water > 140°F	Change in dimensions	Reactor Vessel Internals ~~RVI commitment~~	IV.B2-7 (R-121)	3.1.1-33	E ~~A~~, 101
				Cracking	Water Chemistry Control – Primary and Secondary Reactor Vessel Internals ~~RVI commitment~~	IV.B2-8 (R-120)	3.1.1-30	E ~~A~~, 101
				Loss of material	Water Chemistry Control – Primary and Secondary	IV.B2-32 (RP-24)	3.1.1-83	A
			Treated borated water > 140°F Neutron fluence	Reduction of fracture toughness	Reactor Vessel Internals ~~RVI commitment~~	IV.B2-9 (R-122)	3.1.1-22	E ~~A~~, 101

Table 3.1.2-2-IP3: Reactor Vessel Internals

Component Type	Intended Function	Material	Environment	Aging Effect Requiring Management	Aging Management Programs	NUREG-1801 Vol. 2 Item	Table 1 Item	Notes
Core barrel assembly • lower core barrel flange weld • upper core barrel flange weld	Structural support	Stainless steel	Treated borated water > 140°F	Change in dimensions	Reactor Vessel Internals	IV.B2-7 (R-121)	3.1.1-33	E, 101
				Cracking	Water Chemistry Control – Primary and Secondary Reactor Vessel Internals	IV.B2-8 (R-120)	3.1.1-30	E
				Loss of material	Water Chemistry Control – Primary and Secondary	IV.B2-32 (RP-24)	3.1.1-83	A
			Treated borated water > 140°F Neutron fluence	Reduction of fracture toughness	Reactor Vessel Internals	IV.B2-9 (R-122)	3.1.1-22	E, 101

Table 3.1.2-2-IP3: Reactor Vessel Internals

Component Type	Intended Function	Material	Environment	Aging Effect Requiring Management	Aging Management Programs	NUREG-1801 Vol. 2 Item	Table 1 Item	Notes
Core barrel assembly • outlet nozzles	Flow distribution	Stainless steel	Treated borated water > 140°F	Change in dimensions	Reactor Vessel Internals ~~RVI commitment~~	IV.B2-7 (R-121)	3.1.1-33	E ~~A~~, 101
				Cracking	Water Chemistry Control – Primary and Secondary Reactor Vessel Internals ~~RVI commitment~~	IV.B2-8 (R-120)	3.1.1-30	E ~~A, 101~~
				Loss of material	Water Chemistry Control – Primary and Secondary	IV.B2-32 (RP-24)	3.1.1-83	A

Table 3.1.2-2-IP3: Reactor Vessel Internals

Component Type	Intended Function	Material	Environment	Aging Effect Requiring Management	Aging Management Programs	NUREG-1801 Vol. 2 Item	Table 1 Item	Notes
Lower internals assembly • clevis insert bolt	Structural support	Nickel alloy	Treated borated water	Change in dimensions	Reactor Vessel Internals ~~RVI commitment~~	IV.B2-15 (R-134)	3.1.1-33	E ~~A~~, 101
				Cracking	Water Chemistry Control – Primary and Secondary Reactor Vessel Internals ~~RVI commitment~~	IV.B2-16 (R-133)	3.1.1-37	E ~~A~~, 101
				Loss of material	Water Chemistry Control – Primary and Secondary	IV.B2-32 (RP-24)	3.1.1-83	A
				Loss of preload	Reactor Vessel Internals ~~RVI commitment~~	IV.B2-14 (R-137)	3.1.1-27	E ~~A~~, 101
			Treated borated water Neutron fluence	Reduction of fracture toughness	Reactor Vessel Internals ~~RVI commitment~~	IV.B2-17 (R-135)	3.1.1-22	E ~~A~~, 101

Table 3.1.2-2-IP3: Reactor Vessel Internals

Component Type	Intended Function	Material	Environment	Aging Effect Requiring Management	Aging Management Programs	NUREG-1801 Vol. 2 Item	Table 1 Item	Notes
Lower internals assembly • clevis insert	Structural support	Nickel alloy	Treated borated water	Change in dimensions	Reactor Vessel Internals ~~RVI commitment~~	IV.B2-19 (R-131)	3.1.1-33	E ~~A~~, 101
				Cracking	Water Chemistry Control – Primary and Secondary Reactor Vessel Internals ~~RVI commitment~~	IV.B2-20 (R-130)	3.1.1-37	E ~~A~~, 101
				Loss of material	Water Chemistry Control – Primary and Secondary	IV.B2-32 (RP-24)	3.1.1-83	A
				Loss of material – wear	Inservice Inspection	IV.B2-26 (R-142)	3.1.1-63	E

Table 3.1.2-2-IP3: Reactor Vessel Internals

Component Type	Intended Function	Material	Environment	Aging Effect Requiring Management	Aging Management Programs	NUREG-1801 Vol. 2 Item	Table 1 Item	Notes
Lower internals assembly • intermediate diffuser plate	Flow distribution	Stainless steel	Treated borated water > 140°F	Change in dimensions	Reactor Vessel Internals ~~RVI commitment~~	IV.B2-19 (R-131)	3.1.1-33	E ~~C~~, 101
				Cracking	Water Chemistry Control – Primary and Secondary Reactor Vessel Internals ~~RVI commitment~~	IV.B2-20 (R-130)	3.1.1-37	E ~~C~~, 101
				Loss of material	Water Chemistry Control – Primary and Secondary	IV.B2-32 (RP-24)	3.1.1-83	A

Table 3.1.2-2-IP3: Reactor Vessel Internals

Component Type	Intended Function	Material	Environment	Aging Effect Requiring Management	Aging Management Programs	NUREG-1801 Vol. 2 Item	Table 1 Item	Notes
Lower internals assembly • fuel alignment pin	Structural support	Stainless steel	Treated borated water > 140°F	Change in dimensions	Reactor Vessel Internals ~~RVI commitment~~	IV.B2-15 (R-134)	3.1.1-33	E ~~A~~, 101
				Cracking	Water Chemistry Control – Primary and Secondary Reactor Vessel Internals ~~RVI commitment~~	IV.B2-16 (R-133)	3.1.1-37	E ~~A~~, 101
				Loss of material	Water Chemistry Control – Primary and Secondary	IV.B2-32 (RP-24)	3.1.1-83	A
			Treated borated water > 140°F Neutron fluence	Reduction of fracture toughness	Reactor Vessel Internals ~~RVI commitment~~	IV.B2-17 (R-135)	3.1.1-22	E ~~A~~, 101

Table 3.1.2-2-IP3: Reactor Vessel Internals

Component Type	Intended Function	Material	Environment	Aging Effect Requiring Management	Aging Management Programs	NUREG-1801 Vol. 2 Item	Table 1 Item	Notes
Lower internals assembly • lower core plate	Structural support Flow distribution	Stainless steel	Treated borated water > 140°F	Change in dimensions	Reactor Vessel Internals ~~RVI commitment~~	IV.B2-19 (R-131)	3.1.1-33	E ~~A~~, 101
				Cracking	Water Chemistry Control – Primary and Secondary ~~RVI commitment~~ Inservice Inspection	IV.B2-20 (R-130)	3.1.1-37	E ~~A, 101~~
				Loss of material	Water Chemistry Control – Primary and Secondary	IV.B2-32 (RP-24)	3.1.1-83	A
				Loss of material – wear	Inservice Inspection	IV.B2-26 (R-142)	3.1.1-63	E
			Treated borated water > 140°F Neutron fluence	Reduction of fracture toughness	Reactor Vessel Internals ~~RVI commitment~~	IV.B2-18 (R-132)	3.1.1-22	E ~~A~~, 101

Table 3.1.2-2-IP3: Reactor Vessel Internals

Component Type	Intended Function	Material	Environment	Aging Effect Requiring Management	Aging Management Programs	NUREG-1801 Vol. 2 Item	Table 1 Item	Notes
Lower internals assembly • lower core support castings - column cap - lower core support column bodies	Structural support Flow distribution	CASS	Treated borated water > 482°F	Change in dimensions	Reactor Vessel Internals ~~RVI commitment~~	IV.B2-23 (R-139)	3.1.1-33	E ~~A~~, 101
				Cracking	Water Chemistry Control – Primary and Secondary Reactor Vessel Internals ~~RVI commitment~~	IV.B2-24 (R-138)	3.1.1-30	E ~~A, 101~~
				Loss of material	Water Chemistry Control – Primary and Secondary	IV.B2-32 (RP-24)	3.1.1-83	A
			Treated borated water > 482°F Neutron fluence	Reduction of fracture toughness	Thermal Aging and Neutron Irradiation Embrittlement of Cast Austenitic Stainless Steel (CASS)	IV.B2-21 (R-140)	3.1.1-80	A

Table 3.1.2-2-IP3: Reactor Vessel Internals

Component Type	Intended Function	Material	Environment	Aging Effect Requiring Management	Aging Management Programs	NUREG-1801 Vol. 2 Item	Table 1 Item	Notes
Lower internals assembly • lower core support plate column bolt	Structural support	Stainless steel	Treated borated water > 140°F	Change in dimensions	Reactor Vessel Internals ~~RVI commitment~~	IV.B2-15 (R-134)	3.1.1-33	E ~~A~~, 101
				Cracking	Water Chemistry Control – Primary and Secondary Reactor Vessel Internals ~~RVI commitment~~	IV.B2-16 (R-133)	3.1.1-37	E ~~A, 101~~
				Loss of material	Water Chemistry Control – Primary and Secondary	IV.B2-32 (RP-24)	3.1.1-83	A
				Loss of preload	Reactor Vessel Internals ~~RVI commitment~~	IV.B2-25 (R-136)	3.1.1-27	E ~~A~~, 101
			Treated borated water > 140°F Neutron fluence	Reduction of fracture toughness	Reactor Vessel Internals ~~RVI commitment~~	IV.B2-17 (R-135)	3.1.1-22	E ~~A~~, 101

Table 3.1.2-2-IP3: Reactor Vessel Internals

Component Type	Intended Function	Material	Environment	Aging Effect Requiring Management	Aging Management Programs	NUREG-1801 Vol. 2 Item	Table 1 Item	Notes
Lower internals assembly • lower core support plate column sleeves	Structural support	Stainless steel	Treated borated water > 140°F	Change in dimensions	Reactor Vessel Internals ~~RVI commitment~~	IV.B2-23 (R-139)	3.1.1-33	E ~~A~~, 101
				Cracking	Water Chemistry Control – Primary and Secondary Reactor Vessel Internals ~~RVI commitment~~	IV.B2-24 (R-138)	3.1.1-30	E ~~A~~, 101
				Loss of material	Water Chemistry Control – Primary and Secondary	IV.B2-32 (RP-24)	3.1.1-83	A
			Treated borated water > 140°F Neutron fluence	Reduction of fracture toughness	Reactor Vessel Internals ~~RVI commitment~~	IV.B2-22 (R-141)	3.1.1-22	E ~~A~~, 101

Table 3.1.2-2-IP3: Reactor Vessel Internals

Component Type	Intended Function	Material	Environment	Aging Effect Requiring Management	Aging Management Programs	NUREG-1801 Vol. 2 Item	Table 1 Item	Notes
Lower internals assembly • radial key	Structural support	Stainless steel	Treated borated water > 140°F	Change in dimensions	Reactor Vessel Internals ~~RVI commitment~~	IV.B2-19 (R-131)	3.1.1-33	E ~~A~~, 101
				Cracking	Water Chemistry Control – Primary and Secondary Reactor Vessel Internals ~~RVI commitment~~	IV.B2-20 (R-130)	3.1.1-37	E ~~A~~, 101
				Loss of material	Water Chemistry Control – Primary and Secondary	IV.B2-32 (RP-24)	3.1.1-83	A
				Loss of material – wear	Inservice Inspection	IV.B2-26 (R-142)	3.1.1-63	E

Table 3.1.2-2-IP3: Reactor Vessel Internals

Component Type	Intended Function	Material	Environment	Aging Effect Requiring Management	Aging Management Programs	NUREG-1801 Vol. 2 Item	Table 1 Item	Notes
Lower internals assembly • secondary core support	Structural support Flow distribution	Stainless steel	Treated borated water > 140°F	Change in dimensions	Reactor Vessel Internals ~~RVI commitment~~	IV.B2-19 (R-131)	3.1.1-33	E ~~G~~, 101
				Cracking	Water Chemistry Control – Primary and Secondary Reactor Vessel Internals ~~RVI commitment~~	IV.B2-20 (R-130)	3.1.1-37	E ~~G~~, 101
				Loss of material	Water Chemistry Control – Primary and Secondary	IV.B2-32 (RP-24)	3.1.1-83	A

Table 3.1.2-2-IP3: Reactor Vessel Internals

Component Type	Intended Function	Material	Environment	Aging Effect Requiring Management	Aging Management Programs	NUREG-1801 Vol. 2 Item	Table 1 Item	Notes
Upper Core Support Structure - Upper Internals Assembly								
RCCA guide tube assembly • bolt	Structural support	Stainless steel	Treated borated water > 140°F	Change in dimensions	Reactor Vessel Internals ~~RVI commitment~~	IV.B2-27 (R-119)	3.1.1-33	E ~~A~~, 101
				Cracking	Water Chemistry Control – Primary and Secondary Reactor Vessel Internals ~~RVI commitment~~	IV.B2-28 (R-118)	3.1.1-37	E ~~A~~, 101
				Loss of material	Water Chemistry Control – Primary and Secondary	IV.B2-32 (RP-24)	3.1.1-83	A
				Loss of preload	Reactor Vessel Internals ~~RVI commitment~~	IV.B2-38 (R-114)	3.1.1-27	E ~~C~~, 101

Table 3.1.2-2-IP3: Reactor Vessel Internals

Component Type	Intended Function	Material	Environment	Aging Effect Requiring Management	Aging Management Programs	NUREG-1801 Vol. 2 Item	Table 1 Item	Notes
RCCA guide tube assembly • guide tube (including lower flange welds)	Structural support	Stainless steel	Treated borated water > 140°F	Change in dimensions	Reactor Vessel Internals ~~RVI commitment~~	IV.B2-29 (R-117)	3.1.1-33	E ~~A~~, 101
				Cracking	Water Chemistry Control – Primary and Secondary Reactor Vessel Internals ~~RVI commitment~~	IV.B2-30 (R-116)	3.1.1-30	E ~~A~~, ~~101~~
				Loss of material	Water Chemistry Control – Primary and Secondary	IV.B2-32 (RP-24)	3.1.1-83	A

Table 3.1.2-2-IP3: Reactor Vessel Internals

Component Type	Intended Function	Material	Environment	Aging Effect Requiring Management	Aging Management Programs	NUREG-1801 Vol. 2 Item	Table 1 Item	Notes
RCCA guide tube assembly • guide plates	Structural support	Stainless steel	Treated borated water > 140°F	Change in dimensions	Reactor Vessel Internals	IV.B2-29 (R-117)	3.1.1-33	E
				Cracking	Water Chemistry Control – Primary and Secondary Reactor Vessel Internals	IV.B2-30 (R-116)	3.1.1-30	E
				Loss of material	Water Chemistry Control – Primary and Secondary	IV.B2-32 (RP-24)	3.1.1-83	A
				Loss of material – wear	Reactor Vessel Internals	IV.B2-34 (R-115)	3.1.1-63	E

Table 3.1.2-2-IP3: Reactor Vessel Internals

Component Type	Intended Function	Material	Environment	Aging Effect Requiring Management	Aging Management Programs	NUREG-1801 Vol. 2 Item	Table 1 Item	Notes
RCCA guide tube assembly • support pin	Structural support	~~Nickel alloy~~, Stainless steel	Treated borated water	Change in dimensions	Reactor Vessel Internals ~~RVI commitment~~	IV.B2-27 (R-119)	3.1.1-33	E ~~A~~, 101
				Cracking	Water Chemistry Control – Primary and Secondary Reactor Vessel Internals ~~RVI commitment~~	IV.B2-28 (R-118)	3.1.1-37	E, 105 ~~A, 101~~
				Loss of material	Water Chemistry Control – Primary and Secondary	IV.B2-32 (RP-24)	3.1.1-83	A

Table 3.1.2-2-IP3: Reactor Vessel Internals

Component Type	Intended Function	Material	Environment	Aging Effect Requiring Management	Aging Management Programs	NUREG-1801 Vol. 2 Item	Table 1 Item	Notes
Core plate alignment pin	Structural support	Stainless steel	Treated borated water > 140°F	Change in dimensions	Reactor Vessel Internals ~~RVI commitment~~	IV.B2-39 (R-113)	3.1.1-33	E ~~A~~, 101
				Cracking	Water Chemistry Control – Primary and Secondary Reactor Vessel Internals ~~RVI commitment~~	IV.B2-40 (R-112)	3.1.1-37	E ~~A~~, 101
				Loss of material	Water Chemistry Control – Primary and Secondary	IV.B2-32 (RP-24)	3.1.1-83	A
				Loss of material – wear	Inservice Inspection	IV.B2-34 (R115)	3.1.1-63	E

Table 3.1.2-2-IP3: Reactor Vessel Internals

Component Type	Intended Function	Material	Environment	Aging Effect Requiring Management	Aging Management Programs	NUREG-1801 Vol. 2 Item	Table 1 Item	Notes
Head / vessel alignment pin	Structural support	Stainless steel	Treated borated water > 140°F	Change in dimensions	Reactor Vessel Internals ~~RVI commitment~~	IV.B2-41 (R-107)	3.1.1-33	E ~~C~~, 101
				Cracking	Water Chemistry Control – Primary and Secondary Reactor Vessel Internals ~~RVI commitment~~	IV.B2-42 (R-106)	3.1.1-30	E ~~C~~, 101
				Loss of material	Water Chemistry Control – Primary and Secondary	IV.B2-32 (RP-24)	3.1.1-83	A
				Loss of material – wear	Inservice Inspection	IV.B2-34 (R115)	3.1.1-63	E

Table 3.1.2-2-IP3: Reactor Vessel Internals

Component Type	Intended Function	Material	Environment	Aging Effect Requiring Management	Aging Management Programs	NUREG-1801 Vol. 2 Item	Table 1 Item	Notes
Hold-down spring	Structural support	Stainless steel	Treated borated water > 140°F	Change in dimensions	Reactor Vessel Internals ~~RVI commitment~~	IV.B2-41 (R-107)	3.1.1-33	E ~~A~~, 101
				Cracking	Water Chemistry Control – Primary and Secondary Reactor Vessel Internals ~~RVI commitment~~	IV.B2-42 (R-106)	3.1.1-30	E ~~A~~, 101
				Loss of material	Water Chemistry Control – Primary and Secondary	IV.B2-32 (RP-24)	3.1.1-83	A
				Loss of preload	Reactor Vessel Internals ~~RVI commitment~~	IV.B2-38 (R-114)	3.1.1-27	E ~~A, 101~~

Table 3.1.2-2-IP3: Reactor Vessel Internals

Component Type	Intended Function	Material	Environment	Aging Effect Requiring Management	Aging Management Programs	NUREG-1801 Vol. 2 Item	Table 1 Item	Notes
Mixing devices • support column orifice base • support column mixer	Structural support Flow distribution	CASS	Treated borated water > 482°F	Change in dimensions	Reactor Vessel Internals ~~RVI commitment~~	IV.B2-35 (R-110)	3.1.1-33	E ~~C~~, 101
				Cracking	Water Chemistry Control – Primary and Secondary Reactor Vessel Internals ~~RVI commitment~~	IV.B2-36 (R-109)	3.1.1-30	E ~~C~~, 101
				Loss of material	Water Chemistry Control – Primary and Secondary	IV.B2-32 (RP-24)	3.1.1-83	A
			Treated borated water > 482°F Neutron fluence	Reduction of fracture toughness	Thermal Aging and Neutron Irradiation Embrittlement of Cast Austenitic Stainless Steel (CASS)	IV.B2-37 (R-111)	3.1.1-80	A

Table 3.1.2-2-IP3: Reactor Vessel Internals

Component Type	Intended Function	Material	Environment	Aging Effect Requiring Management	Aging Management Programs	NUREG-1801 Vol. 2 Item	Table 1 Item	Notes
Support column	Structural support	Stainless steel	Treated borated water > 140°F	Change in dimensions	Reactor Vessel Internals ~~RVI commitment~~	IV.B2-35 (R-110)	3.1.1-33	E ~~A~~, 101
				Cracking	Water Chemistry Control – Primary and Secondary Reactor Vessel Internals ~~RVI commitment~~	IV.B2-36 (R-109)	3.1.1-30	E ~~A~~, 101
				Loss of material	Water Chemistry Control – Primary and Secondary	IV.B2-32 (RP-24)	3.1.1-83	A
Upper core plate, fuel alignment pin	Structural support Flow distribution	Stainless steel	Treated borated water > 140°F	Change in dimensions	Reactor Vessel Internals ~~RVI commitment~~	IV.B2-39 (R-117)	3.1.1-33	E ~~A~~, 101
				Cracking	Water Chemistry Control – Primary and Secondary Reactor Vessel Internals ~~RVI commitment~~	IV.B2-40 (R-112)	3.1.1-37	E ~~A~~, 101

Table 3.1.2-2-IP3: Reactor Vessel Internals

Component Type	Intended Function	Material	Environment	Aging Effect Requiring Management	Aging Management Programs	NUREG-1801 Vol. 2 Item	Table 1 Item	Notes
				Loss of material	Water Chemistry Control – Primary and Secondary	IV.B2-32 (RP-24)	3.1.1-83	A
Upper support plate, support assembly (including ring)	Structural support	Stainless steel	Treated borated water > 140°F	Change in dimensions	Reactor Vessel Internals ~~RVI commitment~~	IV.B2-41 (R-107)	3.1.1-33	E ~~A~~, 101
				Cracking	Water Chemistry Control – Primary and Secondary Inservice Inspection ~~RVI commitment~~	IV.B2-42 (R-106)	3.1.1-30	E ~~A, 101~~
				Loss of material	Water Chemistry Control – Primary and Secondary	IV.B2-32 (RP-24)	3.1.1-83	A

Table 3.1.2-2-IP3: Reactor Vessel Internals

Component Type	Intended Function	Material	Environment	Aging Effect Requiring Management	Aging Management Programs	NUREG-1801 Vol. 2 Item	Table 1 Item	Notes
Upper support column bolt	Structural support	Stainless steel	Treated borated water > 140°F	Change in dimensions	Reactor Vessel Internals ~~RVI commitment~~	IV.B2-39 (R-113	3.1.1-33	E ~~A~~, 101
				Cracking	Water Chemistry Control – Primary and Secondary Reactor Vessel Internals ~~RVI commitment~~	IV.B2-40 (R-112)	3.1.1-37	E ~~A~~, 101
				Loss of material	Water Chemistry Control – Primary and Secondary	IV.B2-32 (RP-24)	3.1.1-83	A
				Loss of preload	Reactor Vessel Internals ~~RVI commitment~~	IV.B2-38 (R-114)	3.1.1-27	E ~~A~~, 101

Table 3.1.2-2-IP3: Reactor Vessel Internals

Component Type	Intended Function	Material	Environment	Aging Effect Requiring Management	Aging Management Programs	NUREG-1801 Vol. 2 Item	Table 1 Item	Notes
Incore Instrumentation Support Structure								
Bottom mounted instrumentation column	Structural support	Stainless steel	Treated borated water > 140°F	Change in dimensions	Reactor Vessel Internals ~~RVI commitment~~	IV.B2-11 (R-144)	3.1.1-33	E ~~A~~, 101
				Cracking	Water Chemistry Control – Primary and Secondary Reactor Vessel Internals ~~RVI commitment~~	IV.B2-12 (R-143)	3.1.1-30	E ~~A, 101~~
				Loss of material	Water Chemistry Control – Primary and Secondary	IV.B2-32 (RP-24)	3.1.1-83	A

Table 3.1.2-2-IP3: Reactor Vessel Internals

Component Type	Intended Function	Material	Environment	Aging Effect Requiring Management	Aging Management Programs	NUREG-1801 Vol. 2 Item	Table 1 Item	Notes
Flux thimble guide tube	Structural support	Stainless steel	Treated borated water > 140°F	Change in dimensions	Reactor Vessel Internals ~~RVI commitment~~	IV.B2-11 (R-144)	3.1.1-33	E ~~A~~, 101
				Cracking	Water Chemistry Control – Primary and Secondary Reactor Vessel Internals ~~RVI commitment~~	IV.B2-12 (R-143)	3.1.1-30	E ~~A~~, 101
				Loss of material	Water Chemistry Control – Primary and Secondary	IV.B2-32 (RP-24)	3.1.1-83	A
Thermocouple conduit	Structural support	Stainless steel	Treated borated water > 140°F	Change in dimensions	Reactor Vessel Internals ~~RVI commitment~~	IV.B2-11 (R-144)	3.1.1-33	E ~~C~~, 101
				Cracking	Water Chemistry Control – Primary and Secondary Reactor Vessel Internals ~~RVI commitment~~	IV.B2-12 (R-143)	3.1.1-30	E ~~C~~, 101

Table 3.1.2-2-IP3: Reactor Vessel Internals

Component Type	Intended Function	Material	Environment	Aging Effect Requiring Management	Aging Management Programs	NUREG-1801 Vol. 2 Item	Table 1 Item	Notes
				Loss of material	Water Chemistry Control – Primary and Secondary	IV.B2-32 (RP-24)	3.1.1-83	A

A.2.1.41 Reactor Vessel Internals Aging Management Activities

The Reactor Vessel Internals (RVI) Program is a new plant specific program to manage aging effects of reactor vessel internals using the guidance from the Electric Power Research Institute (EPRI) Materials Reliability Program (MRP). The MRP inspection and evaluation (I&E) guidelines for managing the effects of aging on pressurized water reactor vessel internals are presented in MRP-227, "Materials Reliability Program: Pressurized Water Reactor Internals Inspection and Evaluation Guidelines." The MRP also developed inspection requirements specific to the inspection methods delineated in MRP-227, as well as requirements for qualification of the nondestructive examination (NDE) systems used to perform those inspections. These inspection requirements are presented in MRP-228, "Materials Reliability Program: Inspection Standard for PWR Internals."

MRP-227 and MRP-228 provide the basis of the IPEC Reactor Vessel Internals (RVI) Program. Revisions to MRP-227 and MRP-228, including any changes resulting from the NRC review of the documents (issued as MRP-227-A and MRP-228-A) will be incorporated into the IPEC RVI Program. The RVI Program will monitor the effects of aging degradation mechanisms on the intended function of the internals through periodic and conditional examinations. The RVI Program will detect and evaluate cracking, loss of material, reduction of fracture toughness, loss of preload and dimensional changes of vessel internals components in accordance with MRP-227 inspection requirements and evaluation acceptance criteria.

The IPEC RVI Program will be implemented and maintained in accordance with the guidance in NEI 03-08 [Addenda], Addendum A, "RCS Materials Degradation Management Program Guidelines." Any deviations from mandatory, needed, or good practice implementation requirements established in MRP-227 or MRP-228, will be dispositioned in accordance with the NEI 03-08 implementation protocol. The RVI Program will be implemented prior to the period of extended operation. ~~To manage loss of fracture toughness, cracking, change in dimensions (void swelling), and loss of preload in vessel internals components, the site will (1) participate in the industry programs for investigating and managing aging effects on reactor internals; (2) evaluate and implement the results of the industry programs as applicable to the reactor internals; and (3) upon completion of these programs, but not less than 24 months before entering the period of extended operation, submit an inspection plan for reactor internals to the NRC for review and approval~~.

A.3.1.41 Reactor Vessel Internals Aging Management Activities

The Reactor Vessel Internals (RVI) Program is a new plant specific program to manage aging effects of reactor vessel internals using the guidance from the Electric Power Research Institute (EPRI) Materials Reliability Program (MRP). The MRP inspection and evaluation (I&E) guidelines for managing the effects of aging on pressurized water reactor vessel internals are presented in MRP-227, "Materials Reliability Program: Pressurized Water Reactor Internals Inspection and Evaluation Guidelines." The MRP also developed inspection requirements specific to the inspection methods delineated in MRP-227, as well as requirements for qualification of the nondestructive examination (NDE) systems used to perform those inspections. These inspection requirements are presented in MRP-228, "Materials Reliability Program: Inspection Standard for PWR Internals."

MRP-227 and MRP-228 provide the basis of the IPEC Reactor Vessel Internals (RVI) Program. Revisions to MRP-227 and MRP-228, including any changes resulting from the NRC review of the documents (issued as MRP-227-A and MRP-228-A) will be incorporated into the IPEC RVI Program. The RVI Program will monitor the effects of aging degradation mechanisms on the intended function of the internals through periodic and conditional examinations. The RVI Program will detect and evaluate cracking, loss of material, reduction of fracture toughness, loss of preload and dimensional changes of vessel internals components in accordance with MRP-227 inspection requirements and evaluation acceptance criteria.

The IPEC RVI Program will be implemented and maintained in accordance with the guidance in NEI 03-08 [Addenda], Addendum A, "RCS Materials Degradation Management Program Guidelines." Any deviations from mandatory, needed, or good practice implementation requirements established in MRP-227 or MRP-228, will be dispositioned in accordance with the NEI 03-08 implementation protocol. The RVI Program will be implemented prior to the period of extended operation. ~~To manage loss of fracture toughness, cracking, change in dimensions (void swelling), and loss of preload in vessel internals components, the site will (1) participate in the industry programs for investigating and managing aging effects on reactor internals; (2) evaluate and implement the results of the industry programs as applicable to the reactor internals; and (3) upon completion of these programs, but not less than 24 months before entering the period of extended operation, submit an inspection plan for reactor internals to the NRC for review and approval~~.

Section B.1.42 of the LRA is completely new.

B.1.42 Reactor Vessel Internals Program

Program Description

The Reactor Vessel Internals Program is a new plant-specific program. Revision 1 of NUREG-1801 includes no aging management program description for PWR reactor vessel internals. NUREG-1801, Section XI.M16, PWR Vessel Internals, instead defers to the guidance provided in Chapter IV line items as appropriate. The Chapter IV line item guidance recommends actions to:

> ". . .(1) participate in the industry programs for investigating and managing aging effects on reactor internals; (2) evaluate and implement the results of the industry programs as applicable to the reactor internals; and (3) upon completion of these programs, but not less than 24 months before entering the period of extended operation, submit an inspection plan for reactor internals to the NRC for review and approval."

The industry programs for investigating and managing aging effects on reactor internals are part of the Electric Power Research Institute (EPRI) Materials Reliability Program (MRP). The MRP developed inspection and evaluation (I&E) guidelines for managing the effects of aging on pressurized water reactor vessel internals. These guidelines are presented in MRP-227, "Materials Reliability Program: Pressurized Water Reactor Internals Inspection and Evaluation Guidelines." The I&E guidelines include:

- summary descriptions of PWR internals and functions;
- summary of the categorization and aging management strategy development of potentially susceptible locations, based on the safety and economic consequences of aging degradation;
- direction for methods, extent, and frequency of one-time, periodic, and conditional examinations and other aging management methodologies;
- acceptance criteria for the one-time, periodic, and conditional examinations and other aging management methodologies; and
- methods for evaluation of aging effects that exceed the examination acceptance criteria.

The MRP also developed inspection procedure requirements specific to the inspection methods delineated in MRP-227, as well as requirements for qualification of the nondestructive examination (NDE) systems used to perform those inspections. These inspection procedure requirements are presented in MRP-228, "Materials Reliability Program: Inspection Standard for PWR Internals."

MRP-227 and MRP-228 provide the basis of the IPEC Reactor Vessel Internals (RVI) Program. Revisions to MRP-227 and MRP-228, including any changes resulting from the NRC review of the documents (issued as MRP-227-A and MRP-228-A), will be incorporated into the IPEC RVI Program.

The RVI Program will monitor the effects of aging on the intended function of the internals through periodic and conditional examinations. The RVI Program will detect and evaluate cracking, loss of material, reduction of fracture toughness, loss of preload and dimensional changes of vessel internals components in accordance with MRP-227 inspection recommendations and evaluation acceptance criteria.

IPEC will implement and maintain the RVI Program in accordance with the guidance in NEI 03-08 [Addenda], Addendum A, "RCS Materials Degradation Management Program Guidelines." Any deviations from mandatory, needed, or good practice implementation activities established in MRP-227 or MRP-228, will be managed in accordance with the NEI 03-08 implementation protocol.

Evaluation

1. Scope of Program

MRP-227 guidelines are applicable to reactor internal structural components. The scope does not include consumable items such as fuel assemblies and reactivity control assemblies which are periodically replaced based on neutron flux exposure. The scope does not include welded attachments to the reactor vessel which are considered part of the vessel, or nuclear instrumentation (flux thimble tubes) which forms part of the reactor coolant pressure boundary. Other programs manage the effects of aging on these components.

MRP-227 separates PWR internals components into four groups depending on (1) their susceptibility to and tolerance of aging effects, and (2) the existence of programs that manage the effects of aging. These groupings include:

- Primary – those internals components that are highly susceptible to the effects of at least one aging mechanism (identified in Table 4-3 of MRP-227);
- Expansion – those internals components that are highly or moderately susceptible to the effects of at least one aging mechanism, but for which functionality assessment has shown a degree of tolerance to those effects (identified in Table 4-6 of MRP-227);
- Existing Programs – those internals components that are susceptible to the effects of at least one aging mechanism and for which generic and plant-specific existing AMP elements are capable of managing those effects (identified in Table 4-9 of MRP-227); and
- No Additional Measures – those internals components for which the effects of aging mechanisms are below the MRP-227 screening criteria (internals components not included in Tables 4-3, 4-6 or 4-9 of MRP-227).

The categorization of internals components for Westinghouse PWRs, as presented in MRP-227, applies to IPEC Unit 2 and Unit 3 vessel internals. The component inspections identified in MRP-227, Tables 4-3 and 4-6 for primary and expansion group components, define the scope of the IPEC RVI Program inspections. Those components subject to aging management by existing programs, as delineated in MRP-227, Table 4-9, are included in

the scope of those programs, and are not part of the RVI Program inspections. Components that are not included in Tables 4-3, 4-6 or 4-9 are considered to be within the scope of the program, but require no specific inspections.

2. Preventive Actions

The Reactor Vessel Internals Program is a condition monitoring program that does not include preventive actions. However, primary water chemistry is maintained in accordance with EPRI guidelines by the Water Chemistry Control - Primary and Secondary Program, which minimizes the potential for stress corrosion cracking (SCC) and irradiation assisted stress corrosion cracking (IASCC).

Plant operations also influence aging of the vessel internals. The general assumptions about plant operations used in the development of the MRP-227 guidelines are applicable to the IPEC units. The units are base loaded and implemented low leakage core loading patterns within the first 30 years of operation. IPEC has implemented no design changes to reactor vessel internals beyond those identified in general industry guidance or recommended by Westinghouse.

3. Parameters Monitored or Inspected

The RVI Program will monitor the effects of aging on the intended function of the internals through periodic and conditional examinations and other aging management methods, as required. As described in MRP-227, the program contains elements that will monitor and inspect for the parameters that indicate the progress of each of these effects. The program will use NDE techniques to detect loss of material through wear, identify distortion of components, and locate cracks.

Visual examinations (VT-3) will be used to detect wear. Visual examinations (VT-3) will also detect distortion or cracking through indications such as gaps or displacement along component joints and broken or damaged bolt locking systems. Direct measurements of spring height will be used to detect distortion of the internals hold down spring. Visual examinations (EVT-1) will be used to detect crack-like surface flaws of components and welds. Volumetric (ultrasonic) examinations will be used to locate cracking of bolting. (MRP-227, Tables 4-3 and 4-6)

4. Detection of Aging Effects

The RVI Program will detect cracking, loss of material reduction of fracture toughness, loss of preload and dimensional changes (distortion) of vessel internals components in accordance with MRP-227. The NDE systems (i.e., the combinations of equipment, procedure, and personnel) used to detect these aging effects will be qualified in accordance with MRP-228. The RVI Program will conduct inspections of primary group components as follows (MRP-227, Table 4-3):

- Periodic visual examinations (VT-3) will detect loss of material due to wear from control rod guide tube guide plates and thermal shield flexure plates.
- Periodic visual examinations (VT-3) of the baffle former assembly plates and edge bolts will detect symptoms of distortion due to void swelling or cracking from IASCC. These symptoms include abnormal interactions with fuel assemblies, gaps or displacement along component joints, broken or damaged bolt locking systems, and failed or missing bolts.
- Direct measurements of spring height will detect distortion of the internals hold down spring due to a loss of stiffness. Measurements will be taken periodically, as needed to determine the life of the spring.
- Periodic visual examinations (EVT-1) will detect crack-like surface flaws of the control rod guide tube assembly lower flange welds and the upper core barrel to flange weld.
- Volumetric (UT) examinations will locate cracking of baffle former bolting. Baseline and subsequent measurements will be used to confirm the stability of the bolting pattern.

Indications from EVT-1 or UT inspections may result in additional inspections of expansion group components, as determined by expansion criteria delineated in MRP-227, Table 5-3. The relationships between primary group component inspection findings and additional inspections of expansion group components are as follows.

- Indications from the EVT-1 inspections of the control rod guide tube assembly lower flange welds may result in EVT-1 inspections of the lower support column bodies and VT-3 inspections of bottom mounted instrumentation column bodies to detect cracking.
- Indications from the EVT-1 inspection of the upper core barrel to flange weld may result in EVT-1 inspections of the remaining core barrel welds
- Indications from the UT inspections of baffle former bolting may result in UT inspections of the lower support column bolts and the barrel former bolts for cracking.

5. Monitoring and Trending

The RVI Program uses the inspection guidelines for PWR internals in MRP-227. Inspections in accordance with these guidelines will provide timely detection of aging effects. In addition to the inspections of primary group components, expansion group components have been defined should the scope of examination and re-examination need to be expanded beyond the primary group. Records of inspection results are maintained allowing for comparison with subsequent inspection results.

IPEC will share inspection results with the industry in accordance with the good practice recommendations of MRP-227. The IPEC-specific results will be incorporated into an overall industry report that will track industry progress and will aid in evaluation of potentially significant issues, identification of fleet trends, and determination of any needed revisions to MRP-227 guidelines.

6. Acceptance Criteria

The RVI Program acceptance criteria are from Section 5 of MRP-227. Table 5-3 of MRP-227 provides the acceptance criteria for inspections of the primary and expansion group components. The criteria for expanding the examinations from the primary group components to include the expansion group components are also delineated in MRP-227, Table 5-3. The examination acceptance criteria include: (i) specific, descriptive relevant conditions for the visual (VT-3) examinations; (ii) requirements for recording and dispositioning surface breaking indications that are detected and sized for length by the visual (EVT-1) examinations; and (iii) requirements for system-level assessment of bolted assemblies with unacceptable volumetric (UT) examination indications that exceed specified limits.

7. Corrective Action

Conditions adverse to quality; such as failures, malfunctions, deviations, defective material and equipment, and nonconformances; are promptly identified and corrected. In the case of significant conditions adverse to quality, measures are implemented to ensure that the cause of the nonconformance is determined and that corrective action is taken to preclude recurrence. In addition, the cause of the significant condition adverse to quality and the corrective action implemented is documented and reported to appropriate levels of management. The Entergy (10 CFR Part 50, Appendix B) Quality Assurance Program, including relevant corrective action controls, applies to the RVI Program.

Any detected condition that does not satisfy the examination acceptance criteria must be processed through the corrective action program. Example methods for analytical disposition of unacceptable conditions are discussed or referenced in Section 6 of MRP-227. These methods or other demonstrated and verified alternative methods may be used. The alternative of component repair and replacement of PWR internals is subject to the applicable requirements of the ASME Code Section XI.

8. Confirmation Process

This attribute is discussed in Section B.0.3.

9. Administrative Controls

This attribute is discussed in Section B.0.3.

10. Operating Experience

Relatively few incidents of PWR internals aging degradation have been reported in operating U.S. commercial PWR plants. However, PWR internals aging degradation has been observed in European PWRs, specifically with regard to cracking of baffle-former bolting. For this reason, the U.S. PWR owners and operators created a program to inspect the baffle-former bolting to determine whether similar aging degradation might be expected to occur in U.S. plants. A benefit of this decision was the experience gained with the UT examination techniques used in the inspections.

In addition, the industry began laboratory testing projects to gather the materials data necessary to support future inspections and evaluations. Other confirmed or suspected material degradation concerns that the industry has identified for PWR components are wear in thimble tubes, potential wear in control rod guide tube guide plates, and cracking in some high-strength bolting. The industry has addressed the last concern primarily through replacement of high-strength bolting with bolt material that is less susceptible to cracking and by improved control of pre-load.

The RVI Program established in accordance with the MRP-227 guidelines is a new program. Accordingly, there is no direct programmatic history for IPEC. However, program inspections will use qualified techniques similar to those successfully used at IPEC and throughout the industry for ASME Section XI Code inspections. Internals inspections (VT-3) have been conducted at IPEC in accordance with ASME Section XI Code requirements, with no indications of component degradation. IPEC has appropriately responded to industry operating experience for reactor vessel internals. For example, guide tube support pins (split pins) have been replaced in both units on the basis of industry experience. As with other U.S. commercial PWR plants, cracking of baffle former bolts is recognized as a potential issue for the IPEC units. As a result, IPEC has monitored industry developments and recommendations regarding these components.

Development of the MRP-227 guidelines is based upon industry operating experience, research data, and vendor evaluations. Reactor vessel internals aging degradation incidents in both U.S. and foreign plants were considered in the development of the MRP-227 guidelines. As implemented, this program will account for applicable future operating experience during the period of extended operation.

Conclusion

The RVI Program will be effective at managing aging effects since it will incorporate proven monitoring techniques, acceptance criteria, corrective actions, and administrative controls in accordance with MRP-227 and MRP-228 guidelines and current IPEC programs. The RVI Program will provide reasonable assurance that the effects of aging are managed such that applicable components will continue to perform their intended functions consistent with the current licensing basis through the period of extended operation.

Entergy New Contention NYS-38/RK-TC-5
Attachment 10

June 22, 2011

Neil Wilmshurst
Vice President and Chief Nuclear Officer
Electric Power Research Institute
1300 West W. T. Harris Boulevard
Charlotte, North Carolina 28262-8550

SUBJECT: FINAL SAFETY EVALUATION OF EPRI REPORT, MATERIALS RELIABILITY PROGARM REPORT 1016596 (MRP-227), REVISION 0, "PRESSURIZED WATER REACTOR (PWR) INTERNALS INSPECTION AND EVALUATION GUIDELINES" (TAC NO. ME0680)

Dear Mr. Wilmshurst:

By letter dated January 12, 2009 (Agencywide Documents Access and Management System Accession No. ML090160204), the Electric Power Research Institute submitted for U.S. Nuclear Regulatory Commission (NRC) staff review and approval Materials Reliability Program (MRP) Report 1016596 (MRP-227), Revision 0, "Pressurized Water Reactor (PWR) Internals Inspection and Evaluation Guidelines."

TR MRP-227, Revision 0, contains a discussion of the technical basis for the development of an aging management program (AMP) for reactor vessel internal components in the PWR vessels supplied by Westinghouse, Babcock and Wilcox and Combustion Engineering. TR MRP-227, Revision 0, provides inspection and evaluation guidelines as part of an AMP for use by the licensees.

The NRC staff has found that TR MRP-227 is acceptable for referencing in licensing applications for PWR internals inspection and evaluation to the extent specified in the enclosed final safety evaluation (SE). The final SE defines the basis for acceptance of the TR. The staff's final evaluation of the MRP-227, Revision 0 report, including eight plant-specific action items and seven conditions is enclosed.

Our acceptance applies only to material provided in the subject TR. We do not intend to repeat our review of the acceptable material described in the TR. When the TR appears as a reference in license applications, our review will ensure that the material presented applies to the specific plant involved. License amendment requests that deviate from this TR will be subject to a plant-specific review in accordance with applicable review standards.

In accordance with the guidance provided on the NRC website, we request that EPRI publish an accepted version of this TR within three months of receipt of this letter. The accepted version shall incorporate this letter and the enclosed final SE after the title page. Also, it must contain historical review information, including NRC requests for additional information and your responses. The accepted version shall include a "-A" (designating accepted) following the TR identification symbol.

If future changes to the NRC's regulatory requirements affect the acceptability of this TR, EPRI and/or licensees referencing it will be expected to revise the TR appropriately, or justify its continued applicability for subsequent referencing.

Sincerely,

/RA/

Robert A. Nelson, Deputy Director
Division of Policy and Rulemaking
Office of Nuclear Reactor Regulation

Project No. 669

Enclosure:
Final SE

cc w/encl: See next page

If future changes to the NRC's regulatory requirements affect the acceptability of this TR, EPRI and/or licensees referencing it will be expected to revise the TR appropriately, or justify its continued applicability for subsequent referencing.

Sincerely,

/RA/

Robert A. Nelson, Deputy Director
Division of Policy and Rulemaking
Office of Nuclear Reactor Regulation

Project No. 669

Enclosure:
Final SE

cc w/encl: See next page

DISTRIBUTION:
PUBLIC
PLPB Reading File
RidsNrrDpr
RidsNrrDprPlpb
RidsNrrPMSStuchell
RidsNrrLADBaxley
RidsOgcMailCenter
RidsAcrsAcnwMailCenter
RidsNrrDlr
RidsNrrDorl
RidsNrrDci
RidsNrrDciCvib
JJolicoeur (HardCopy)

ADAMS ACCESSION NO.: ML111600498 **TAC ME0680**

OFFICE	DPR/PLPB/PM	DPR/PLPB/LA	DCI/CVIB/BC	DPR/PLPB/BC	DPR/DD
NAME	SStuchell	DBaxley	CFairbanks for MMitchell	JJolicoeur	RNelson
DATE	06/ 09 /2011	06/ 15 /11	06/ 16 /11	6/17/11	6/22/11

OFFICIAL RECORD COPY

SAFETY EVALUATION BY THE OFFICE OF NUCLEAR REACTOR REGULATION

MATERIALS RELIABILTY PROGRAM: PRESSURIZED WATER REACTOR INTERNALS

INSPECTION AND EVALUATION GUIDELINES (MRP-227, REVISION 0)

PROJECT NO. 669

1.0 INTRODUCTION

1.1 Background

By letter dated January 12, 2009 (Agencywide Documents Access and Management System (ADAMS) Accession No. ML090160204), the Electric Power Research Institute (EPRI) submitted for U.S. Nuclear Regulatory Commission (NRC) staff review and approval Materials Reliability Program (MRP) Report 1016596 (MRP-227), Revision 0, "Pressurized Water Reactor (PWR) Internals Inspection and Evaluation Guidelines."

By letter dated March 2, 2010 (ADAMS Accession No. ML100640166), EPRI informed the NRC that MRP-227 Revision 0, was made publicly available and is no longer proprietary.

MRP-227, Revision 0 contains a discussion of the technical basis for the development of an aging management program (AMP) for reactor vessel internal (RVI) components in PWR vessels supplied by Westinghouse, Babcock and Wilcox (B&W) and Combustion Engineering (CE). MRP-227, Revision 0 provides inspection and evaluation (I&E) guidelines as part of the AMP for use by the applicants/licensees.

1.2 Purpose

The NRC staff reviewed MRP-227, Revision 0 to determine whether its guidance will provide reasonable assurance that the I&E of the subject RVI components will maintain their required performance during the period of extended operation. The review also considered compliance with license renewal (LR) requirements in order to allow licensees or applicants the option of incorporating the MRP-227, Revision 0 guidelines by reference in a plant-specific integrated plant assessment (IPA) related to the AMP and associated time-limited aging analyses (TLAAs).

1.3 Organization of the Safety Evaluation

Section 2.0 of this safety evaluation (SE) summarizes MRP-227, Revision 0. Section 3.0 documents the staff's evaluation and findings pertaining to the adequacy of the MRP's AMP recommendations. In particular, Section 3.0 documents staff concerns with MRP-227, Revision 0 and the basis for limitations and conditions being placed on the use of MRP-227 as well as licensee/applicant action items that shall be addressed by applicants/licensees who choose to implement the NRC-approved version of MRP-227. Section 4.0 summarizes the limitations and conditions and the applicant/licensee action items. Section 5.0 provides the conclusions resulting from this SE.

Enclosure

1.4 Regulatory Requirements

Title 10 of the *Code of Federal Regulations* (CFR) Part 54 addresses the requirements for plant license renewal. The regulation at 10 CFR Section 54.21 requires that each application for LR contain an IPA and an evaluation of TLAAs. The IPA shall identify and list those structures and components subject to an aging management review (AMR) and demonstrate that the effects of aging (cracking, loss of material, loss of fracture toughness, dimensional changes, loss of preload) will be adequately managed so that their intended functions will be maintained consistent with the current licensing basis (CLB) for the period of extended operation as required by 10 CFR 54.29(a). In addition, 10 CFR 54.22 requires that a LR application include any technical specification (TS) changes or additions necessary to manage the effects of aging during the period of extended operation as part of the LR application.

Structures and components subject to an AMP shall encompass those structures and components that (1) perform an intended function, as described in 10 CFR 54.4, without moving parts or without a change in configuration or properties and (2) are not subject to replacement based on a qualified life or specified time period. These structures and components are referred to as “passive” and “long-lived” structures and components, respectively. The scope of components considered for inspection under MRP-227, Revision 0 guidance includes core support structures (typically denoted as Examination Category B-N-3 by the American Society of Mechanical Engineers (ASME) Code, Section XI) and those RVI components that serve an intended LR safety function pursuant to criteria in 10 CFR 54.4(a)(1). The scope of the program does not include consumable items such as fuel assemblies, reactivity control assemblies, and nuclear instrumentation because these components are not typically within the scope of the components that are required to be subject to an AMP, as defined by the criteria set in 10 CFR 54.21(a)(1).

Some owners of PWR units were granted renewed licenses and each of these licensees made a commitment to conform with the recommendations specified in NUREG-1801, “Generic Aging Lessons Learned (GALL), Revision 1, AMP XI.M16, “PWR Vessel Internals.” AMP XI.M16 requires that the applicant provide a commitment in the Final Safety Analysis Review (FSAR) supplement to (a) participate in the industry programs for investigating and managing aging effects on RVI components; (b) evaluate and implement the results of the industry programs as applicable to the RVI components; and (c) upon completion of these programs, but not less than 24 months before entering the period of extended operation, submit an inspection plan for RVI components to the NRC for review and approval. Each applicant/licensee that made a commitment to conform with the recommendation specified in NUREG-1801, Revision 1, AMP XI.M16 also made a commitment in its FSAR that it will implement industry developed AMP for its RVI components.

If a LR applicant confirms that it will implement MRP-227, Revision 0 guidelines, as modified by this SE, at its plant, then no further review of the AMP for the PWR RVI components is necessary, except as specifically identified in Section 4.0 of this SE. With these exceptions, an applicant may rely on the MRP-227, Revision 0 report for the demonstration required by Section 54.21(a)(3) with respect to the RVI components and structures within the scope of the report. Under such circumstances, the staff intends to rely on the evaluation in this SE to make the findings required by 10 CFR 54.29 with respect to a particular application.

2.0 SUMMARY OF MRP-227

MRP-227, Revision 0 contains a discussion of the technical basis for implementing inspection requirements for PWR RVI components that are subject to any of the applicable degradation mechanisms (e.g., stress corrosion cracking (SCC), intergranular stress corrosion cracking (IGSCC), irradiation-assisted stress corrosion cracking (IASCC), wear, fatigue, thermal and/or neutron embrittlement, void swelling, and irradiation-enhanced stress relaxation) during the LR period. This report, in addition, provides a brief, high-level summary of flaw evaluation guidelines for RVI components that exhibit active degradation mechanisms, and establishes requirements for inspection of additional components if an active degradation mechanism is discovered (i.e., expansion of the scope of RVI component inspections). Extensive information was provided with respect to the effects of the applicable degradation mechanisms on various RVI components and the inspection requirements for these components.

The following sections include a brief description of the information contained in MRP-227, Revision 0.

2.1 MRP-227, Revision 0 - Section 1

Section 1 of the MRP-227, Revision 0 report includes an overall synopsis related to aging management of the PWR RVI components by identifying the following steps in the MRP's process for developing the AMP: (1) development of screening criteria for the applicable degradation mechanisms; (2) screening of the different RVI components designed by Westinghouse, B&W, and CE based on the components' susceptibility to degradation; (3) functionality analyses and failure modes, effects, and criticality analyses (FMECAs) performed for the components which resulted in the binning of components into different inspection categories; and (4) development of the proposed I&E guidelines and flaw evaluation methodology.

Step (1) of this process was not discussed in MRP-227, Revision 0 but was documented in MRP-175, "Materials Reliability Program: PWR Internals Material Aging Degradation Mechanism Screening and Threshold Values." MRP-227 also referenced MRP-211, "Materials Reliability Program: PWR Internals: Age Related Material Properties Degradation Mechanisms, Models and Basis Data," which addresses screening criteria for the degradation mechanisms in PWR RVI components. Screening of PWR RVI components for susceptibility to the degradation mechanisms was performed by establishing a set of screening criteria for each relevant degradation mechanism. The MRP-175 report provided technical data that was obtained from experiments to provide the basis that the MRP used to develop the screening criteria for different degradation mechanisms. The screening criteria for the degradation mechanisms considered in MRP-227, Revision 0 depend on various factors. For example, the screening factors for SCC depend on type of material and applied stress.

2.2 MRP-227, Revision 0 - Sections 2 and 3

In Sections 2 and 3 of the report, the MRP provided an expanded discussion regarding steps (2) and (3) identified in Section 2.1 of this SE. In this SE, these steps, which lead up to the binning of components into inspection categories, may be referred to as the "categorization" phase of the MRP's process.

As background material, Section 3 of MRP-227, Revision 0 discussed the various design characteristics, and their functions, of the RVI components supplied by Westinghouse, CE, and B&W. This section also discussed potential aging effects that may result from the identified degradation mechanisms. These aging effects included: (1) various forms of cracking, (2) loss of material induced by wear; (3) loss of fracture toughness due to either individual or synergistic contributions from thermal aging or neutron irradiation embrittlement; (4) dimensional changes and potential loss of fracture toughness due to void swelling and irradiation growth; and (5) loss of preload due to either individual or synergistic contributions from thermal and irradiation-enhanced stress relaxation or creep.

Initial screening of RVI components for all three (B&W, CE, and Westinghouse) designs was based on a consideration of material properties (e.g., chemical composition) and operating conditions (e.g., neutron fluence exposure, temperature history, and representative stress levels) in order to determine the susceptibility of PWR RVI components to the applicable aging mechanisms. This resulted in the binning of these RVI components as either susceptible or not susceptible to each of the eight degradation mechanisms, based on the degradation screening criteria.

Next, the MRP performed a failure modes, effects and criticality analysis (FMECA) of the RVI components. The FMECA process was discussed in detail in MRP-190, “Materials Reliability Program: Failure Modes, Effects, and Criticality Analysis of B&W-Designed PWR Internals,” and MRP-191, “Materials Reliability Program: Screening, Categorization and Ranking of Reactor Internals of Westinghouse and Combustion Engineering PWR Designs.” The FMECA was a qualitative process that included expert elicitation by technical experts. Expert elicitation was used for developing the technical basis for categorization of various RVI components under different categories based on the combination of the likelihood of component degradation due to one or more of the eight degradation mechanisms, and the severity of safety consequences. Each component was assigned to one of three categories (for each degradation mechanism) ranging from insignificant effects (Category A) to potentially moderately significant effects (Category B) to potentially significant effects (Category C). Category C components were associated with higher risk in that they are more susceptible to aging degradation and the consequences of their failure are more severe. Category C components were also often considered the likely lead components for providing telltale signs of the associated aging degradation. Category B components, on the other hand, can still be susceptible to aging degradation but their consequences of failure are typically less than Category C components. Category A components are either (a) those which have been judged to be not susceptible to any of the eight degradation mechanisms or (b) those which have been judged to be somewhat susceptible to one or more aging degradation mechanisms but are not expected to lose functionality.

The MRP then performed a functionality assessment of the PWR internals components and items that would most be affected by the degradation mechanisms (i.e., preliminary Category B and C items from the FMECA). This assessment was based on representative plant designs using irradiated and aged material properties. The functionality analyses included finite element analyses (FEA) on selected RVI components that were deemed to be susceptible to irradiation-induced degradation mechanisms (e.g., IASCC, neutron embrittlement, void swelling, and irradiation-induced stress relaxation) where the effects are dependent on multiple variables and develop with time to assess the evolution of degradation. The functionality analyses were used to demonstrate that although some Category C components were susceptible to one or more

degradation mechanisms, the effect of the degradation mechanisms on their performance was not significant.

It should be noted that the FMECA and functionality analyses were based on the assumption of thirty years of operation with high leakage core loading patterns followed by thirty years of low leakage core loading patterns. In the U.S. PWR fleet, low leakage core loading patterns were implemented early in the unit's operating lives. Hence, MRP considered this assumption conservative. The MRP also assumed a base load operation such that the modeled plants operate at fixed power levels and do not vary power on a calendar or load demand schedule.

Industry considered the results from the FMECA and functionality analysis along with operating experience, component accessibility, and existing inspection programs to develop the recommended inspection categories for maintaining the long-term functionality of PWR RVI components. In Section 3, the MRP, based on this assessment, developed four inspection categories:

1. Primary – RVI components that are either highly susceptible to effects of aging due to any active degradation mechanism, or components that have a degree of tolerance for a specific degradation mechanism but for which no leading highly susceptible or accessible component exists. These components are to be periodically inspected as part of a RVI component AMP.

2. Expansion – RVI components that are moderately or highly susceptible to the effects of aging due to one or more active degradation mechanisms, but for which the functionality analyses indicated that these components have a degree of tolerance to the aging effects associated with these degradation mechanisms. These components will be inspected as part of a RVI component AMP if unacceptable degradation is identified during inspections of relevant "Primary" inspection category components.

3. Existing (Programs) – RVI components that are susceptible to the effects of aging due to one or more active degradation mechanisms, but that are managed under an existing generic or plant-specific AMP currently implemented by the PWR fleet which adequately manages the aging effect. MRP-227, Revision 0 consistently calls this category the "Existing" inspection category, but for clarity it will be referred to as the "Existing (Programs)" inspection category in this SE.

4. No Additional Measures – RVI components that are below the screening criteria for the applicable degradation mechanisms, or were classified under this category due to FMECA and functionality analysis findings. No further action is required by the MRP-227 Revision 0 guidelines for managing the aging of these components.

Tables 3-1 through 3-3 in Section 3 of MRP-227, Revision 0 summarize the proposed inspection categories for each B&W, CE, and Westinghouse RVI component that was initially placed into Categories B and C as a result of the initial screening and FMECA analyses. These tables identify the proposed inspection categories associated with each of the individual degradation mechanisms as well as the final grouping. The final I&E guidelines were based on the summary classifications contained in these tables.

2.3 MRP-227, Revision 0 - Sections 4 and 5

In Sections 4 and 5 of MRP-227, Revision 0, a detailed discussion regarding: (1) the examination method to be applied for a particular component based on its final categorization (see Section 2.2 of this SE); (2) qualifications for the examinations; (3) examination frequency; (4) sampling and coverage; (5) expansion scope of examination based on the extent of observed degradation; and (6) evaluation of examination results. In this SE, the staff will refer to this information as the MRP's proposed I&E guidelines for components subject to MRP-227. Tables 4-1, 4-2, and 4-3 of MRP-227, Revision 0 address the identification of "Primary" inspection category components, their relevant aging effects, and the type of examination methods to be used for plants designed by B&W, CE, and Westinghouse, respectively. Similar information is provided in Tables 4-4, 4-5, and 4-6 for the "Expansion" inspection category components designed by B&W, CE, and Westinghouse, respectively. Tables 4-8 and 4-9 include similar information for some components in the "Existing (Programs)" inspection category for plants designed by CE and Westinghouse, respectively. No existing generic industry programs were considered sufficient to monitor the aging effects in RVI components designed by B&W and, hence, no Table 4-7 was included. Although categorized under the "Existing (Programs)" inspection category, CE thermal shield positioning pins, CE in-core instrumentation (ICI) thimble tubes, and Westinghouse guide tube support pins (split pins) were not included in Tables 4-8 and 4-9 because the adequacy of the plant-specific existing programs to manage degradation of these components for the period of extended operation could not be verified in the development of MRP-227, Revision 0.

The examination methods endorsed by MRP-227, Revision 0 include: (1) ASME Code, Section XI, visual (VT-3 and VT-1) examinations; (2) enhanced visual (EVT-1) and VT-1 examinations; (3) surface examination [eddy current testing (ET)], (4) volumetric examination using ultrasonic techniques (UT), and (5) physical measurements. Selection of an examination method was based on the characterization of a particular degradation mechanism. It was also based on the examination method that is capable of identifying the aging effect associated with the degradation mechanism. MRP's proposed examinations are to be implemented by well-established standard procedures and these procedures are to be qualified per industry inspection standards addressed in MRP-228, "Materials Reliability Program: Inspection Standard for Reactor Internals." Some examination methods require additional qualifications per ASME Code, Section V, "Non-Destructive Examinations."

In general, the "Primary" and "Existing (Programs)" inspection category components are to be examined once during every 10-year ISI interval. Tables 4-1, 4-2, 4-3, 4-8, and 4-9 address the frequency of examinations to be used for these components in plants designed by B&W, CE, and Westinghouse. For some components (e.g., baffle bolts), MRP-227, Revision 0 specifically notes that the frequency of examination may be increased based on inspection results. In general, operating experience gathered from inspections conducted in accordance with the NRC-approved version of MRP-227 will be reviewed and used to update inspection requirements.

Tables 4-1, 4-2, 4-3, 4-4, 4-5, 4-6, 4-8, and 4-9 address the requirements for the examination coverage for RVI components in plants designed by B&W, CE, and Westinghouse. In addressing the coverage to be obtained when examinations are performed, MRP-227, Revision 0 states that for all "Primary" and "Expansion" inspection category components, one hundred percent of accessible surfaces/volumes are required to be examined, with the

exception of some components for which limited accessibility is known to exist. In this case, known limited accessibility was related to the need to disassemble the RVI components in order to achieve full accessibility to all of a set of like components for examination. Types of like components with known limited accessibility included, for example, Westinghouse guide cards in control rod guide tube (CRGT) assemblies. For these sets of components, MRP-227, Revision 0 required an inspection sample, ranging from 10 percent to 20 percent of each subject set of like components. For the 10 percent to 20 percent sample of each set of components to be inspected, MRP-227, Revision 0 required that one hundred percent of the accessible surfaces/volumes be examined.

MRP-227, Revision 0 addressed the examination of “Expansion” inspection category components, which is based on the extent of aging degradation observed in a related “Primary” inspection category component in Tables 4-4, 4-5, 4-6, 5-1, 5-2, and 5-3. The criteria for initiating the examination of the “Expansion” inspection category components is based on the column on the linkage between the “Primary” and “Expansion” inspection category components established in these tables. In general, a single “Primary” inspection category component that is being inspected to monitor for a particular degradation mechanism may be linked to more than one “Expansion” inspection category component. The observation of degradation in the “Primary” inspection category component could trigger the need to examine the associated “Expansion” inspection category components, depending on the licensee’s evaluation of the significance of observed degradation in the “Primary” inspection category component. Certain “Expansion” inspection category RVI components were determined to be completely inaccessible for examination, including the B&W core barrel cylinder (including vertical and circumferential seam welds), former plates, external baffle-to-baffle bolts and their locking devices, core barrel-to-former bolts and their locking devices, and core support shield vent valve disc shafts or hinge pins. For these inaccessible “Expansion” category components, MRP-227, Revision 0 stated that, when their inspection is called for based upon the observation of a degradation mechanism in the associated “Primary” inspection category component, the applicant/licensee must evaluate the continued operability of the inaccessible “Expansion” inspection category component or, alternatively, replace the component.

With regard to the evaluation of examination results, Tables 5-1, 5-2, and 5-3 and the text of Section 5 provide: (1) relevant conditions for each specified examination method and (2) general guidance on the evaluation of relevant conditions for plants designed by B&W, CE, and Westinghouse, respectively. For example, for EVT-1 examinations, the specific relevant condition identified in MRP-227, Revision 0 is a detectable crack on the surface of an RVI component. The acceptance criteria then provided for the relevant conditions associated with this examination method was that only the absence of a relevant condition would require no further evaluation. An acceptable process to disposition relevant conditions may include supplemental examinations, accepting the condition until the next examination, or replacement of the component. The outcome of the evaluation of the relevant condition may also affect the implementation of the examination of associated “Expansion” inspection category components.

2.4 MRP-227, Revision 0 - Section 6

Section 6 of the MRP-227, Revision 0 provided guidance on the application of flaw evaluation methodologies to be implemented when an examination reveals the presence of a relevant condition. Various subsections in Section 6 provided details on:

1. The loading conditions to be considered when evaluating core support structures, including deadweight loads, mechanical loads, hydraulic loads, thermal loads, and loads from operating basis and safe shutdown earthquakes.

2. The requirements and limitations (based on accumulated neutron fluence) for the application of limit load evaluation methodologies for flawed RVI components. The requirements include application of limit load procedures similar to those given in ASME Code, Section XI.

3. The application of linear elastic fracture mechanics (LEFM) and elastic-plastic fracture mechanics (EPFM) for RVI components with an accumulated neutron fluence that exceeds the limit load application threshold limit.

4. The application of existing crack growth rate values for the evaluation of SCC in stainless steel components and IASCC in irradiated stainless steel components.

5. The evaluation of flaws in bolts and bolted assemblies. This includes the assessment of the functionality of bolted assemblies that may contain one or more non-functional bolts. This evaluation is to be based on the minimum number required to maintain the functionality of the assembly until the next examination.

While this evaluation guidance is included in MRP-227, it is important to note that the industry has submitted WCAP-17096-NP for staff review. This WCAP report supersedes the guidance contained in Section 6 of MRP-227. The guidance in the WCAP will be used to evaluate component degradation that exceeds the acceptance criteria in Section 5 when it is observed during required inspections.

2.5 MRP-227, Revision 0 - Section 7

Section 7 of MRP-227, Revision 0 provided a summary of the implementation requirements for the guidelines described in the MRP-227, Revision 0 report. The implementation requirements are defined by the latest edition of Nuclear Energy Institute (NEI) Implementation Protocol NEI 03-08, “Guidelines for the Management of Materials Issues,” which includes implementation categories used in MRP-227, Revision 0 including: (a) “Mandatory,” which requires implementation of the guidelines at all plants; (b) “Needed,” which provides an option for implementing the guidelines wherever possible or implementing alternative approaches, or (c) “Good Practice,” which recommends implementation of the guidelines as an option whereby significant operational and reliability benefits can be achieved at a given plant. Failure to meet a “Needed” or a “Mandatory” requirement is a deviation from the guidelines and a written justification for deviation must be prepared and approved as described in Addendum D to NEI-03-08. A copy of the deviation is sent to the MRP so that, if needed, improvements to the guidelines can be developed. A copy of the deviation is also sent, for information, to the NRC.

Section 7 of MRP-227, Revision 0 specified the following with respect to the implementation of specific MRP-227, Revision 0 guidelines:

1. Each PWR unit shall develop and document an AMP for the PWR RVI components within thirty-six months following the issuance of this report. This is a “Mandatory” requirement.

2. Each PWR unit shall implement Tables 4-1 through 4-9 and Tables 5-1 through 5-3 of the MRP-227, Revision-A report for the applicable design within twenty-four months following the issuance of MRP-227-A report. This is a “Needed” requirement.

3. Examination of the RVI components shall comply with the MRP-228 Revision 0, “Materials Reliability Program: Inspection Standard for PWR Internals.” This is a “Needed” requirement.

4. Examination results that do not meet the examination acceptance criteria defined in Section 5 of the MRP-227, Revision 0 guidelines shall be recorded and entered in the plant corrective action program and dispositioned.

5. A summary report of all inspections and monitoring, evaluation, and new repairs shall be provided within one hundred and twenty days of the completion of an outage during which the RVI components were examined. The summary of the examination results shall be included in an industry report that is updated every six months. This report will monitor the industry progress on the AMP related to PWR RVI components and it will also list the emerging operating experience. This is a “Good Practice” requirement.

2.6 MRP-227, Revision 0 - Appendix A

Appendix A addresses how the AMP defined in MRP-227, Revision 0 meets specific AMP attributes as defined by NUREG-1801, the License Renewal Generic Aging Lessons Learned report. Specifically, Appendix A discusses how the MRP-227, Revision 0 program meets the “Scope of Program” (Attribute 1 from NUREG-1801), “Parameters Monitored” (Attribute 3 from NUREG-1801), and “Detection of Aging Effects” (Attribute 4 from NUREG-1801). Appendix A also stated that supplementary information shall be provided by the applicants/licensees to satisfy all the NUREG-1801 AMP requirements for the remaining program elements when implementing MRP-227, Revision 0.

3.0 STAFF EVALUATION

The staff reviewed the MRP-227, Revision 0 report to determine if it demonstrated that the effects of aging on the RVI components covered by the report would be adequately managed so that the components’ intended functions would be maintained consistent with the CLB for the period of extended operation, in accordance with 10 CFR 54.21(a)(3). Besides the IPA, Part 54 requires an evaluation of TLAAs, in accordance with 10 CFR 54.21(c). The staff reviewed the MRP-227, Revision 0 report to determine if the TLAAs covered by the report were evaluated for LR in accordance with 10 CFR 54.21(c).

During its review of MRP-227, Revision 0, the staff issued four sets of requests for additional information (RAIs) that addressed technical issues. The details of the staff’s RAIs and the corresponding responses are available in ADAMS (proprietary version). However, the staff did not include all the RAIs and the MRP’s responses in this SE; it included only those salient RAIs and MRP responses that address specific points of emphasis. References 15 through 17 contain all of the staff’s technical RAIs and the MRP’s responses. In addition, a draft version of this SE (ADAMS Accession No. ML110820773) was posted for public comment on April 11,

2011, for 30 days. All comments received during this public comment period were reviewed and considered during the development of this final SE.

3.1 Evaluation of MRP-227, Revision 0 - Section 1

The staff reviewed Section 1 of the MRP-227, Revision 0 and accepts the approach used by the MRP to develop the screening criteria for initially binning the RVI components into Category A, B, and C. In this section, the MRP provided technical data that was used as the basis for the screening criteria for different degradation mechanisms. The screening criteria were based on: (1) type of material used in RVI components, (2) operating stress levels, and in some cases, (3) neutron fluence values. For example, IASCC screening criteria were established by (1) type of material, (2) threshold limit of neutron fluence value and (3) stress values. The threshold limits for neutron fluence and stress levels were developed by valid research data that is widely used by the industry. Similar criteria were developed for the other degradation mechanisms. The NRC staff has not officially reviewed the technical basis for the screening criteria that is contained in MRP-175 and MRP-211. Therefore, the NRC staff does not specifically endorse the screening criteria used in MRP 227. However, the MRP-227, Revision 0 strategy of identifying “Primary” inspection components based on the relative likelihood of degradation compared to other components diminishes the importance of the specific screening criteria values used in MRP-227, Revision 0.

3.2 Evaluation of MRP-227, Revision 0 - Sections 2 and 3

The staff’s review of Sections 2 and 3 of MRP-227, Revision 0 resulted in the staff, in principle, accepting the MRP’s categorization process for the development of AMP for the RVI components. The MRP considered susceptibility of RVI components to one or more degradation mechanisms and the safety consequences as a result of the failure of the RVI components. However, the staff identified some concerns with the MRP’s categorization process and/or its application. The staff’s evaluation of the MRP’s process is provided below, focusing on the staff’s concerns which led to the imposition of conditions and limitations on the use of MRP-227, Revision 0 and plant-specific action items associated with the use of MRP-227, Revision 0 (as discussed in Section 4 of this SE).

3.2.1 General Evaluation of MRP’s Categorization Process - Initial Screening, FMECA, Functionality Analyses, and the Assigning of Components to Inspection Categories

In Sections 2 and 3 of MRP-227, Revision 0, the MRP discussed at length, their categorization process for various RVI components. The categorization process (i.e., initial screening, FMECA, and functionality analyses) described in MRP-227, Revision 0 provides an adequate approach for identifying the degradation mechanisms for RVI components within the scope of LR. Those components that were assessed to be most affected by one or more of the degradation mechanisms addressed in Section 2.0 of this SE were binned under Category C, those components that were expected to be moderately affected by the degradation mechanisms were binned under Category B, and components that were expected to be unaffected by the degradation mechanisms were binned under Category A. The initial screening process entailed evaluation of material properties, corrosion resistance of materials, the effect of neutron fluence on some components, and loading conditions. The staff concluded that the MRP had adopted a systematic approach in the initial screening of the RVI components into various categories, and the staff accepts this approach.

The staff, in principle, also agrees with the technical basis used in the development of the recommended component inspection groupings identified in Section 2.2 of this SE based, in part, on using FMECA and functionality analysis. However, in its review of the FMECA process described in MRP-190 and MRP-191 and the functionality analyses described in MRP-229 and 230, the staff identified concerns with the MRP's approach. Some of the staff's concerns were resolved via MRP responses to staff RAIs, while concerns that were not adequately resolved are reflected in plant-specific action items and/or conditions and limitations on the use of MRP_227, Revision 0. Examples of significant staff concerns that were resolved are given in the following paragraphs, and those that were not adequately resolved are addressed in Sections 3.2.2, 3.2.3, and 3.2.4 of this SE.

The staff requested that the MRP address the impact of the potential aging effects on the RVI components and reactor system performance in transient and accident conditions. In its response, the MRP provided information to demonstrate that component loadings assumed in the FMECA process included normal operating loads and, in some cases, both normal operating loads and transient loadings. The MRP stated that the expert elicitation process also assessed the safety implications of potentially failed components, and that it could be inferred that the non-escalation of consequences was considered during the FMECA process. The MRP also stated that, as discussed in MRP-190, the expert elicitation process explicitly considered whether the aging effects considered in the FMECA process would result in more severe consequences if a design basis transient occurred. Further, the MRP indicated that if degradation is found during inspections, the subsequent evaluation of the degraded component's integrity is performed using the guidance in WCAP-17096-NP, Revision 2 which is currently under staff review. The WCAP evaluation requires that acceptable component performance be demonstrated under all design basis conditions such that the licensing basis is maintained. Component repair or replacement is required if this evaluation demonstrates that the licensing basis cannot be maintained. The staff accepts this response and this issue is resolved pending the review of WCAP-17096-NP, Revision 2.

The staff also had concerns associated with some of the FMECA results and the outcome of some of the functionality analyses. Some RVI components that were originally identified for potential aging degradation due to single or multiple aging degradation mechanisms (Categories B and C) were placed under the "No Additional Measures" inspection category as a result of the FMECA or functionality analyses. The staff was concerned that these components could be subject to damage and possible deterioration of the original mechanical properties due to aging degradation. Hence, the structural integrity of these RVI components could be challenged under licensing basis loading conditions. The MRP provided a few examples and included acceptable technical justification for categorizing some RVI components from Category B and C to the "No Additional Measures" Inspection category. The examples include: (1) Westinghouse bottom mounted instrumentation cruciforms, and (2) Westinghouse lower core plate fuel alignment bolts. The staff accepts their response and considers this issue resolved.

3.2.2 High Consequence Components in the "No Additional Measures" Inspection Category

During the review of the FMECA process, the staff identified a concern regarding the categorization of some of the RVI components whose failure could cause significant safety consequences. In some cases, the MRP placed these components under the "No Additional Measures" inspection category. The following paragraphs discuss the categorization of these

high consequence RVI components. The relevant high consequence components are: (1) the upper core plate and lower support forging or casting in Westinghouse-designed reactors, (2) the lower core support beams, core support barrel assembly (CSBA) upper cylinder and CSBA upper core barrel flange in CE-designed reactors and (3) the lower grid-to-core barrel bolts in B&W-designed reactors.

CE and Westinghouse RVI components were grouped in risk categories as part of the FMECA based on the combination of (1) their likelihood of failure and (2) a qualitative assessment of the potential for core damage associated with their failure. The staff's concern is related to those components that were qualitatively assessed as having a "high" potential for core damage associated with their failure (i.e., high consequence components) that are not already identified for inspection within the "Primary" or "Expansion" categories. An RVI component was considered to have a "high" potential for core damage when it was believed that some core damage could result from failure of the component, for example, related to the inability to safely shutdown the reactor. The likelihood of degradation in these components was typically assessed in MRP-227, Revision 0, as being "low." A component was identified as having a "low" likelihood of failure when there were no known failures of this component based on operating experience, and it is believed that the failure is unlikely to occur during extended period of operation. A similar approach was used for the B&W components, although different terminology was used. For B&W components, those in "Risk Band III" were understood to be similar to the combination of "high" potential for core damage associated with their failure and a "low" likelihood of failure from the Westinghouse/CE characterization.

The staff determined that the MRP did not provide an adequate justification regarding how these high consequence/low likelihood of failure RVI components were assigned to the "No Additional Measures" inspection category. The staff is concerned that these components could be subject to loss of structural integrity due to one or more degradation mechanisms. To ensure that the structural integrity and functionality of these RVI components are maintained under all licensing basis conditions during the period of extended operation, the staff has determined that these components shall be included in the "Expansion" inspection category in the NRC approved version of MRP-227. The staff recognizes that several or all of these components are subject to ASME Code, Section XI VT-3 inspections. However, the examination method to be used for additional inspections of "Expansion" inspection category components triggered by degradation in the "Primary" inspection category components to which they are linked shall be consistent with the examination method used to identify the "Primary" component degradation. The staff has identified "Primary" inspection category links for the upper core plate and lower support forging or casting in Westinghouse-designed reactors, and the lower core support beams, upper cylinder and upper core barrel flange in the core support barrel assembly in CE-designed reactors in Section 4.1.1 of this SE.

Additional expectations regarding the examination coverage and re-examination frequency are addressed in Sections 4.1.4 and 4.1.6 of this SE. **This is addressed as Topical Report Condition 1 in Section 4.1.1.**

3.2.3 Inspection of Components Subject to Irradiation-Assisted Stress Corrosion Cracking

MRP-227, Revision 0 grouped the following components under the "Expansion" inspection category: (1) the upper and lower core barrel welds and lower core barrel flange weld in Westinghouse-designed reactors; and (2) the lower cylinder welds in the core support barrel

assembly (CSBA) in CE-designed reactors. These components were qualitatively assessed as having a “high” potential for core damage associated with their failure (i.e., they are high consequence components) and a “medium” likelihood of failure. These components were determined to be susceptible to aging effects due to SCC, IASCC and neutron embrittlement. In MRP-227, Revision 0, the corresponding “Primary” inspection category components were the upper core barrel flange weld in Westinghouse-designed reactors and the upper core support barrel flange weld in CE-designed reactors. These “Primary” inspection category components were judged to be most susceptible to SCC, but not susceptible to aging effects due to IASCC and neutron embrittlement.

Unlike SCC, the onset of degradation due to IASCC and neutron embrittlement depends on neutron fluence and stress levels. The incubation period for initiating cracks due to SCC is different from IASCC. Since these aging mechanisms are so different with respect to crack initiation and crack propagation, any identifiable aging effects associated with SCC in the “Primary” inspection category components may not truly represent the extent of actual aging degradation due to IASCC and neutron embrittlement in the associated “Expansion” inspection category components. Lack of any evidence of cracking due to SCC in the “Primary” inspection category components does not mean that the “Expansion” inspection category components are free of cracks due to IASCC. Therefore, the staff is concerned that the aging effects associated with IASCC and neutron embrittlement in the “Expansion” inspection category components may not be identified in a timely manner during the period of extended operation.

To ensure that the structural integrity and functionality of these high consequence of failure RVI components which are subject to IASCC and neutron embrittlement are maintained under all licensing basis conditions of operation during the period of extended operation, the staff has determined that the upper and lower core barrel welds and lower core barrel flange weld in Westinghouse-designed reactors, and the lower cylinder welds in the CSBA in CE-designed reactors shall be included in the “Primary” inspection category in the NRC-approved version of MRP-227. The examination methods shall be consistent with the MRP’s recommendations addressed in MRP-227, Revision 0 for these components, the examination coverage for these components shall conform to the criteria described in Section 3.3.1 of this SE, and the examination frequency shall be on a 10-year interval consistent with other “Primary” inspection category components. **This is addressed as Topical Report Condition 2 in Section 4.1.2 of this SE.**

3.2.4 Inspection of High Consequence Components Subject to Multiple Degradation Mechanisms

The staff evaluated the effect of multiple degradation mechanisms on the high consequence RVI components and identified that the B&W flow distributor-to-shell forging bolts and CE lower support structure core support column (casting or wrought) welds as needing to be included in the “Primary” inspection category.

B&W flow distributor-to-shell forging bolts are susceptible to SCC, fatigue, and wear. Section 3.5 of MRP-190 bases the risk band only on the single most likely aging mechanism. In Table A-1 of MRP-190 (pages A-41 and A-42), the MRP stated that SCC in the flow distributor-to-shell forging bolts is very likely to occur, whereas degradation due to fatigue and wear is less likely to occur. The safety consequence of failure of the subject component, on the other hand, is classified as “Severe” which could lead to core damage (i.e., multiple damaged fuel

assemblies) with reduced margins to adequately cool the core. While SCC is regarded as the most likely degradation mechanism, the staff is concerned that the synergistic effects of SCC, fatigue and wear could potentially cause greater degradation in these bolts than just the consideration of SCC alone. Due to these synergistic effects, degradation in these bolts could then be equivalent to or greater than other components susceptible only to SCC. Therefore, the staff has concluded that B&W flow distributor-to-shell forging bolts shall be inspected as a "Primary" inspection category component.

The CE lower support structure core support column (casting or wrought) welds are susceptible to SCC, IASCC, fatigue, and irradiation embrittlement. In addition to these degradation mechanisms, this casting component is assumed to be susceptible to thermal embrittlement. These components were qualitatively assessed as having a "high" potential for core damage associated with their failure (i.e., they are high consequence components) and a "medium" likelihood of failure. MRP-232 identified IASCC and irradiation embrittlement as potential degradation mechanisms for these welds. However, the staff is concerned that the synergistic effects of SCC, fatigue, and thermal embrittlement (casting only) could potentially cause greater degradation in these welds than just the consideration of IASCC and irradiation embrittlement alone. Degradation in these welds could then be equivalent to or greater than other components susceptible only to IASCC and irradiation embrittlement due to the synergistic effects. Therefore, the staff has concluded that CE lower support structure core support column (casting or wrought) welds shall be inspected as a "Primary" inspection category component.

The examination methods for the aforementioned components shall be consistent with the MRP's recommendations addressed in MRP-227, Revision 0 for these components, the examination coverage for these components shall conform to the criteria described in Sections 3.3.1 of this SE, and the examination frequency shall be on a 10-year interval consistent with other "Primary" inspection category components. **This is addressed as Topical Report Condition 3 in Section 4.1.3 in this SE.**

3.2.5 Plant-Specific Confirmation of the Applicability and Completeness of MRP-227, Revision 0

3.2.5.1 Applicability of FMECA and Functionality Analysis Assumptions

In Section 2.2 of this SE, the staff noted some of the assumptions made in the industry's FMECAs and functionality analyses. The staff questioned how it would be determined whether the operating history of a particular plant (including, for example, the effects of any plant power uprate) was adequately represented by the assumptions made in support of the industry's FMECAs and functionality analyses. In its October 29, 2010, response to RAI 4-6 from the NRC staff's fourth set of RAIs, the MRP indicated that each applicant/licensee was responsible for assessing its plant's operating history and demonstrating that the approved version of MRP-227 is applicable to the facility. Each applicant/licensee shall refer, in particular, to the assumptions regarding plant design and operating history made in the FMECA and functionality analyses for reactors of their design (i.e., Westinghouse, CE, or B&W) which support MRP-227 and each applicant/licensee shall describe the process used for determining plant-specific differences in the design of their RVI components or plant operating conditions, which result in different component inspection categories. **This issue is Applicant/Licensee Action Item 1, and it is addressed in Section 4.2.1 of this SE.**

However, the staff is also concerned that the MRP does not provide adequate guidance to allow an applicant/licensee to assess the applicability of the MRP-227, Revision 0 to its plant. The MRP should consider developing guidance that will allow an applicant/licensee to determine if the plant-specific differences in the design of their RVI components or plant operating conditions result in different component inspection categories. This guidance could be issued in a separate MRP report or included in a future revision of MRP-227.

3.2.5.2 PWR Vessel Internal Components Within the Scope of License Renewal

The list of RVI components for which the effects of aging will be managed by application of the AMP defined by MRP-227, Revision 0 is defined by Tables 4-1 and 4-2 in MRP-189, Revision 1, "Materials Reliability Program: Screening, Categorization, and Ranking of B&W-Designed PWR Internals," and Tables 4-4 and 4-5 in MRP-191.

Consistent with the requirements addressed in 10 CFR 54.4, each applicant/licensee is responsible for identifying which RVI components are within the scope of LR for its facility. Applicants/licensees shall review the information in Tables 4-1 and 4-2 in MRP-189, Revision 1, and Tables 4-4 and 4-5 in MRP-191 and identify whether these tables contain all of the RVI components that are within the scope of LR for their facilities in accordance with 10 CFR 54.4. If the tables do not identify all the RVI components that are within the scope of LR for its facility, the applicant or licensee shall identify the missing component(s) and propose any necessary modifications to the program defined in MRP-227, as modified by this SE, when submitting its plant-specific AMP such that the effects of aging on the missing component(s) will be managed for the period of extended operation. **This issue is Applicant/Licensee Action Item 2, and it is addressed in Section 4.2.2 of this SE.**

3.2.5.3 Evaluation of the Adequacy of Plant-Specific Existing Programs

The MRP identified that certain CE and Westinghouse RVI components which are subject to inspection under existing programs require further plant-specific evaluation to verify the acceptability of the existing programs, or to identify changes to the existing programs which should be implemented to manage the aging of these components for the period of extended operation. If the existing programs are not acceptable, it is necessary to identify and implement changes to the programs to manage aging of applicable components over the period of extended operation. Generically, these were components for which existing plant-specific programs other than a plant's ASME Code, Section XI program were being credited for managing aging. These components were left for plant-specific evaluation because, although the MRP was able to identify that plant-specific programs already exist for the management of these components, the MRP was unable to evaluate in detail the content of each facility's plant-specific program. The CE and Westinghouse components identified for this type of plant-specific evaluation include: CE thermal shield positioning pins and CE in-core instrumentation thimble tubes (Section 4.3.2 in MRP-227, Revision 0), and Westinghouse guide tube support pins (split pins) (Section 4.3.3 in MRP-227, Revision 0). Considerations that should be included in this evaluation follow for these specific Westinghouse and CE components.

Westinghouse guide tube support pins are made from either 316 stainless steel or Alloy X750. There have been issues with cracking of the original Alloy X750 pins and many licensees have replaced them with type 316 stainless steel materials. The applicants/licensees shall evaluate the adequacy of their plant-specific existing program and ensure that the aging degradation is

adequately managed during the extended period of operation for both Alloy X750 and type 316 stainless steel guide tube support pins (split pins). Therefore, it is recommended that the evaluation consider the need to replace the Alloy X750 support pins (split pins), if applicable, or inspect the replacement type 316 stainless steel support pins (split pins) to ensure that cracking has been mitigated and that aging degradation is adequately monitored during the extended period of operation.

CE fuel alignment pins are susceptible to IASCC, wear, fatigue, irradiation embrittlement, and irradiation-enhanced stress relaxation. The applicants/licensees shall evaluate the adequacy of their plant-specific existing program with respect to CE fuel alignment pins and ensure that the synergistic effects of aforementioned degradation mechanisms are adequately monitored during the extended period of operation.

Therefore, the staff determined that CE thermal shield positioning pins and in-core instrumentation thimble tubes, and Westinghouse guide tube support pins (split pins) require plant-specific evaluation to verify the acceptability of the existing programs, or to identify changes to the program that should be implemented to manage the aging of these components, for the period of extended operation. **This issue is Applicant/Licensee Action Item 3, and it is addressed in Section 4.2.3 of this SE.**

3.2.5.4 B&W Core Support Structure Upper Flange Stress Relief

In its October 29, 2010, response to RAI 4-4, the MRP stated that the core support structure upper flange weld was below the screening criteria for all aging degradation mechanisms including SCC because the applied stress on this component is low and weld residual stresses have been alleviated by a stress relief heat treatment during the original fabrication. The staff accepts this technical basis, but has concluded that each applicant/licensee shall confirm the accuracy of this assumption for its facility. Therefore, B&W applicants/licensees shall confirm that the core support structure upper flange at their facilities were stress relieved during original fabrication/construction. If the upper flange weld has not been stress relieved, then this component shall be inspected as a “Primary” inspection category component consistent with the upper core support barrel weld in Westinghouse and CE units. These Westinghouse and CE components have a similar function, but have not been stress relieved.

If necessary, the examination methods and frequency for non-stress relieved B&W core support structure upper flange welds shall be consistent with the recommendations in MRP-227 for the Westinghouse and CE upper core support barrel welds. The examination coverage for this B&W flange weld shall conform to the staff’s imposed criteria as described in Sections 3.3.1 and 4.3.1 of this SE. **This issue is Applicant/Licensee Action Item 4, and it is addressed in Section 4.2.4 of this SE.**

3.3 Evaluation of MRP-227, Revision 0 - Sections 4 and 5

The staff’s review of Sections 4 and 5 of the MRP-227, Revision 0 resulted in the staff, in principle, accepting MRP’s development of I&E guidelines for the subject RVI components. The MRP considered susceptibility of RVI components to one or more degradation mechanisms and the safety consequences as a result of the failure of the RVI components in developing the I&E guidelines. However, the staff identified concerns with the MRP’s proposed I&E guidelines for some components subject to MRP-227, Revision 0. In the following sections, the staff’s

evaluation of the proposed I&E guidelines for components subject to MRP-227, Revision 0 is provided, focusing on the staff's concerns which led to the imposition of conditions and limitations on the use of MRP-227, Revision 0 and plant-specific action items associated with the use of MRP-227, Revision 0 (as summarized in Section 4 of this SE).

3.3.1 General Evaluation of the MRP-227, Revision 0 I&E Guidelines

The staff's review of Sections 4 and 5 of the MRP-227, Revision 0 indicated that the MRP generally provided an adequate justification regarding the examination criteria imposed for the "Primary" and "Expansion" inspection category components. "Primary" inspection category components were considered the lead components in which a degradation mechanism was expected to occur prior to the expansion components. Therefore, "Primary" inspection category components are inspected periodically. Further, the analyses indicated that "Expansion" inspection category components have a higher degree of tolerance to the aging effects to which they may be subject than their associated "Primary" inspection category components. Therefore, the initiation of inspections of "Expansion" inspection category components begins only when a particular degradation mechanism is identified in the associated "Primary" inspection category components. The staff noted that for "Primary" and "Expansion" inspection category components, the MRP generally provided examination guidelines including examination methods to be used, sampling and coverage of the examinations, expansion scope based on the extent of degradation, and evaluation of examination results for the RVI components. The staff reviewed the frequency of examinations of the RVI components addressed in tables in Section 4 of MRP-227, Revision 0 and concluded that, typically, the "Primary" inspection category components are to be examined during every 10-year interval.

Therefore, the staff, in principle, agrees with the I&E guidelines developed for components subject to MRP-227, Revision 0. However in its review of the I&E guidelines, the staff identified several concerns with the MRP's proposal. Some of the staff's concerns were resolved via MRP responses to staff RAIs, and those that were not adequately resolved are reflected in plant-specific action items and/or conditions and limitations on the use of MRP-227, Revision 0. An example of a significant staff concern that was resolved is given in the following paragraphs, while those that were not adequately resolved are addressed in Sections 3.3.2, 3.3.3, 3.3.4, 3.3.5, 3.3.6, and 3.3.7 of this SE.

One of the staff's concerns was that, for components in the "Primary" and "Expansion" inspection categories, MRP-227, Revision 0 did not provide a minimum examination coverage criterion related to the total surface area/volume of the component in order to define a successful examination. The staff's concern was that, although MRP-227, Revision 0 states that all accessible surfaces/volumes of a component subject to inspection are to be examined, this may result in a very limited examination if plant-specific conditions limit the accessible surface area/volume.

In its October 29, 2010, response to NRC staff RAI 4-8, the MRP indicated that they will update MRP-227, Revision 0 to require, in addition to the requirement to examine one hundred percent of the accessible inspection area/volume for "Primary" and "Expansion" inspection category components, a minimum of 75% coverage of the entire examination volume (i.e., including both accessible and inaccessible regions) for all "Primary" inspection category components in order to define an inspection meeting the intent of MRP-227, Revision 0. For certain like-components (e.g., CE core shroud bolts) in the "Primary" inspection category, the examination "coverage"

requirements are specified in terms of a minimum percentage of like components that must be inspected. In these cases, the MRP stated that the minimum sample size for inspection is 75% of the total population of like components. When considering the inspection of a set of like components, it is understood that essentially one hundred percent of the area/volume of each accessible like component will be examined.

The staff has concluded that, if there are no defects discovered during the inspection, the 75 percent sample size based on inspection area/volume or total population of like components is acceptable. The staff believes that the minimum inspection area/volume or sample size is acceptable because the examined area/volume/population will provide reasonable assurance regarding the presence or absence of an active degradation mechanism in the subject component. Further, the minimum inspection area/volume is acceptable because it is assumed that the component locations that are 1) most susceptible to the degradation mechanism that is the subject of the examination and 2) most critical to component integrity will be adequately covered by the examinations as a result of the large design margins typically associated with these components. Applicants/licensees may be able to use available information to identify those specific component areas/volumes, or the subset of a group of like components, that are most likely to exhibit degradation and most important to component integrity. Using this information to prioritize the examinations will help to ensure their effectiveness.

If defects are discovered during the inspection, the licensee shall enter that information into the plant's corrective action program and to evaluate whether the results of the examination ensure that the component (or set of like components) will continue to meet its intended function under all licensing basis conditions of operation until the next scheduled examination. Hence, the staff finds that the MRP has adequately addressed the staff's concern regarding a minimum examination coverage requirement for the "Primary" inspection category components.

3.3.2 Imposition of Minimum Examination Coverage Criteria for "Expansion" Inspection Category Components

In MRP-227, Revision 0, a requirement to examine one hundred percent of the accessible area/volume, or one hundred percent of accessible components when a population of like components (e.g., bolting) is examined, is proposed for "Expansion" inspection category components. The staff's concern is that this criterion may result in a limited examination if only a small part of a given component, or a limited number of a population of like components, is accessible for examination.

To ensure that the effects of aging are adequately monitored in the "Expansion" inspection category components, when the examination of these components is required, the staff has concluded that the minimum examination coverage requirement proposed by the MRP for "Primary" inspection category components (discussed in Section 3.3.1 above) shall also be applied to the inspection of components in the "Expansion" inspection category. That is, a minimum of 75 percent coverage of the entire examination area or volume (i.e., including both accessible and inaccessible regions) for all "Expansion" inspection category components or a minimum sample size for inspection is 75 percent of the total population of like components will define an inspection meeting the intent of MRP-227, as approved by the NRC. For the inspection of a set of like components, it is understood that essentially 100% of the area/volume of each accessible like component will be examined. Application of this minimum examination coverage requirement will ensure that the inspections of "Expansion" inspection category

components will be effective at identifying degradation, if present. However, applicants/licensees may also be able to use available information to identify those specific component areas/volumes, or the subset of a group of like components, that are most likely to exhibit degradation and most important to component integrity. Using this information to prioritize the examinations will help to ensure their effectiveness.

If defects are discovered during the inspection, the licensee shall enter that information into the plant's corrective action program and evaluate whether the results of the examination ensure that the component (or set of like components) will continue to meet its intended function under all licensing basis conditions of operation until the next scheduled examination. **This is addressed as Topical Report Condition 4 in Section 4.1.4 of this SE.**

3.3.3 Examination Frequencies for Baffle-Former Bolts and Core Shroud Bolts

For some components, the staff was concerned over their assigned inspection frequency. For baffle-former bolts in B&W and Westinghouse-designed reactors and core shroud bolts in CE-designed reactors, the examination frequency can vary from 10 to 15 years. In Appendix B to its October 29, 2010, RAI response, the MRP indicated that the rate of radiation-induced degradation of these components may decrease in the later stage of a plant's life. The analysis that describes the reduction in the rate of degradation is described in MRP-230, "Materials Reliability Program: Functionality Analysis for Westinghouse and Combustion Engineering Representative PWR Internals." Since the rate of radiation-induced degradation may decrease in the later stage of a plant's life, the inspection interval may be able to be increased. Hence, MRP-227, Revision 0 provided a proposed examination frequency range of every 10 to 15 years.

Although the staff understands the general argument made in MRP-227, Revision 0, it has concluded that the information for the aforementioned components under the column "Examination Method/Frequency" in Tables 4-1, 4-2, and 4-3 of MRP-227, Revision 0 is not sufficiently prescriptive to address this issue. The entry for these components provides too much latitude with insufficient oversight of an applicant's/licensee's determination of its examination frequency. Hence, the staff determined that the NRC-approved version of MRP-227 shall specify a 10-year inspection frequency for these components following the initial or baseline inspection unless an applicant/licensee provides an evaluation for NRC staff approval that justifies a longer interval between inspections. **This is addressed as Topical Report Condition 5 in Section 4.1.5 of this SE.**

3.3.4 Periodicity of the Re-Examination of "Expansion" Inspection Category Components

The I&E guidelines for "Expansion" inspection category components are addressed in Tables 4-4, 4-5 and 4-6 in MRP-227, Revision 0. However, Tables 4-4, 4-5, and 4-6 in MRP-227, Revision 0 do not address the periodicity of subsequent re-examination for all of the "Expansion" inspection category components. For those "Expansion" inspection category components for which Tables 4-4, 4-5, and 4-6 do not specify a periodicity of subsequent re-examination, the MRP stated that the periodicity of the subsequent re-examinations depends on the results of the initial examination.

The staff has concluded that the NRC-approved version of MRP-227 shall specify a baseline periodicity of subsequent re-examination for all "Expansion" inspection category components

and that a baseline 10-year interval between examinations of “Expansion” inspection category components once degradation is identified in the associated “Primary” inspection category component and examination of the “Expansion” inspection category component commences unless an applicant/licensee provides an evaluation for NRC staff approval which justifies a longer interval between inspections. This periodicity is consistent with ASME Code, Section XI requirements. Hence, the staff has concluded that MRP-227, Revision 0, Tables 4-4, 4-5, and 4-6 should be modified to apply a baseline 10-year re-examination interval to all “Expansion” inspection category components. **This is Topical Report Condition 6, and it is addressed in Section 4.1.6 of this SE.**

3.3.5 Application of Physical Measurements as Part of the I&E Guidelines for B&W, CE, and Westinghouse RVI Components

Physical measurements were proposed as part of the I&E guidelines for some RVI components. By letter dated April 20, 2010, the MRP responded to NRC RAIs 3-11 and 3-12 and indicated that physical measurements must be utilized to monitor for loss of compressibility for Westinghouse hold down springs, and for distortion in the gap between the top and bottom core shroud segments in CE units with core barrel shrouds assembled in two vertical sections. In its response to the aforementioned RAIs, the MRP further stated that the physical measurement techniques are generally not within the scope of MRP-227, Revision 0, and, therefore, it did not typically provide specific acceptance criteria for these examinations.

MRP also identified that B&W baffle-to-baffle bolts and core barrel-to-former bolts are susceptible to irradiation-enhanced stress relaxation, irradiation creep, IASCC, irradiation embrittlement, and overload. Loss of preload can occur due to irradiation-enhanced stress relaxation and irradiation creep. These components are currently in the “Expansion” inspection category; however, there are no examination requirements and the integrity of these components needs to be justified by evaluation or replacement if examination is triggered by degradation in the baffle-to-former bolts (i.e., their associated “Primary” inspection category component). In its response to the fourth set of RAIs, dated October 29, 2010, the MRP indicated that a plant-specific analysis is required for evaluating the effect of loss of preload in these bolts on the closure integrity of the core barrel assembly to demonstrate that functionality is maintained. Therefore, B&W applicants/licensees shall perform a plant-specific analysis on the effect of loss of closure integrity on the functionality of the core barrel assembly and propose physical measurements or examinations, if necessary, to confirm that adequate closure integrity will be maintained over the period of extended operation.

Applicants/licensees shall identify the plant-specific acceptance criteria to be applied for their facilities when these physical examinations are made, and these acceptance criteria will be consistent with the plant’s licensing basis and the need to maintain the functionality of the component being inspected under all licensing basis conditions of operation. **This is Applicant/Licensee Action Item 5, and it is addressed in Section 4.2.5 of this SE.**

3.3.6 Evaluation of Inaccessible B&W Components

MRP-227, Revision 0 indicates that certain B&W core barrel assembly components are known to be inaccessible for inspection. They are the core barrel cylinder (including vertical and circumferential seam welds), the former plates, the external baffle-to-baffle bolts and their

locking devices. and the core barrel-to-former bolts and their locking devices. Each of these is an “Expansion” inspection category component. In addition, in its October 29, 2010 response to NRC staff RAI 4-8, the MRP indicated that the B&W core support shield vent valve disc shafts or hinge pins are also inaccessible. This component is a “Primary” inspection category component and it does not have an associated “Expansion” inspection category component.

MRP-227, Revision 0 does not propose that applicants/licensees examine these inaccessible components. Applicants/licensees will justify the acceptability of these components for continued operation through the period of extended operation by performing an evaluation, or by proposing a scheduled replacement of the components. As part of their application to implement MRP-227, applicants/licensees shall provide their justification for the continued operability of each of the inaccessible components and/or provide their plan for the replacement of the components. **This is Applicant/Licensee Action Item 6, and it is addressed in Section 4.2.6 of this SE.**

3.3.7 Plant-Specific Evaluation of CASS Components

In its response dated October 29, 2010, to the fourth set of RAIs, MRP identified that some cast austenitic stainless steel (CASS) RVI components require a plant-specific analysis to demonstrate that their structural integrity and functionality are maintained during the extended period of operation.

In its response to RAI 4-15, dated October 29, 2010, the MRP identified B&W in-core monitoring instrumentation (IMI) guide tube assembly spiders (“Primary” inspection category) and CRGT assembly spacer castings (“Expansion” inspection category), CE lower support columns (“Primary” inspection category), and Westinghouse lower support column bodies (“Expansion” inspection category) as requiring such a plant-specific analysis. An analysis for the B&W IMI guide tube assembly is necessary to determine the minimum number of spider arms that are needed for continued operation. For B&W CRGT assembly spacer castings, a plant-specific reactivity analysis is necessary to determine the number of control rod drive mechanisms (CRDMs) that are required for shut down of the reactor and assess how many CRGT spacer castings could fail and still retain sufficient operability of the remaining CRDMs to shut down the reactor. An analysis for the CE lower support columns and Westinghouse lower support castings is necessary to demonstrate that these components maintain functionality during the extended period of operation.

Therefore, applicants/licensees shall develop a plant-specific analysis for the B&W IMI guide tube assembly spiders and CRGT spacer castings, CE lower support columns, and Westinghouse lower support column bodies to demonstrate that these components will maintain their functions during the period of extended operation. These analyses should consider the possible loss of fracture toughness in these components due to thermal and irradiation embrittlement. The plant-specific analysis shall be consistent with the plant’s licensing basis and the need to maintain the functionality of the components being evaluated under all licensing basis conditions of operation. The applicant/licensee shall include the plant-specific analysis as part of their submittal to apply the approved version of MRP-227. **This is Applicant/Licensee Action Item 7, and it is addressed in Section 4.2.7 of this SE.**

3.4 Evaluation of MRP-227, Revision 0 - Section 6

Section 6 of the MRP-227, Revision 0 includes a description of the flaw evaluation methodology that is to be implemented when an examination reveals indications that do not meet acceptance criteria. Based on its review of this section, the staff concludes that this section adequately addresses, at a high level, the evaluation methodologies that could be used by the licensee or applicant for evaluating flaws detected during the examination of the RVI components. However, industry indicated in its response to RAI 4-14 that Section 6 of MRP-227 will not be used by licensees for evaluating examination results that do not meet the acceptance criteria identified in Section 5 of MRP-227. Rather, WCAP-17096-NP, Revision 2 is the document that will be used as the framework to develop those generic and plant-specific evaluations triggered by findings in the RVI examinations. The NRC staff is currently reviewing WCAP-17096-NP, Revision 2.

3.5 Evaluation of MRP-227, Revision 0 - Section 7

The staff reviewed Section 7 of MRP-227, Revision 0 and concludes that the implementation of MRP-227, Revision 0 shall comply with the implementation protocol specified in the NEI 03-08. NEI 03-08 requires that when a licensee does not implement a “Mandatory” or “Needed” element (defined in Section 2.5 of this SE) at its facility, it shall notify the NRC staff of the deviation and justification for the deviation no later than 45 days after approval by a licensee executive. Consistent with requirements addressed in Section 7.3 of MRP-227, Revision 0, all PWR licensees shall implement a program that is consistent with the implementation requirements addressed under the “Needed” category in NEI 03-08. Reporting of the inspection results is very essential to document the operating experience of the fleet. However, the reporting of inspection results to the industry is only addressed as a “Good Practice” element in MRP-227, Revision 0. Since this information will be used to update the I&E guidelines and to inform subsequent examinations at nuclear power plants, the staff recommends that reporting of inspection results both be classified under the “Needed” category.

3.5.1 Submittal of Information for Staff Review and Approval

In addition to the implementation of MRP-227, Revision 0 in accordance with NEI 03-08, applicants/licensees whose licensing basis contains a commitment to submit a PWR RVI AMP and/or inspection program shall also make a submittal for NRC review and approval to credit their implementation of MRP-227, as amended by this SE. An applicant’s/licensee’s application to implement MRP-227, as amended by this SE shall include the following items (1) and (2). Applicants who submit applications for license renewal after the issuance of this SE shall, in accordance with the NUREG-1801, Revision 2, submit the information provided in the following items (1) through (5) for staff review and approval.

1. An AMP for the facility that addresses the 10 program elements as defined in NUREG-1801, Revision 2, AMP XI.M16A.

2. To ensure the MRP-227, Revision 0 program and the plant-specific action items will be carried out by applicants/licensees, applicants/licensees are to submit an inspection plan which addresses the identified plant-specific action items for staff review and approval consistent with the licensing basis for the plant. If an applicant/licensee plans to implement an AMP which deviates from the guidance provided in MRP-227, as

approved by the NRC, the applicant/licensee shall identify where their program deviates from the recommendations of MRP-227, as approved by the NRC, and shall provide a justification for any deviation which includes a consideration of how the deviation affects both “Primary” and “Expansion” inspection category components.

3. The regulation at 10 CFR 54.21(d) requires that an FSAR supplement for the facility contain a summary description of the programs and activities for managing the effects of aging and the evaluation of TLAAs for the period of extended operation. Those applicants for LR referencing MRP-227, as approved by the staff, for their RVI component AMP shall ensure that the programs and activities specified as necessary in MRP-227, as approved by the NRC, are summarily described in the FSAR supplement.

4. The regulation at 10 CFR 54.22 requires each applicant for LR to submit any TS changes (and the justification for the changes) that are necessary to manage the effects of aging during the period of extended operation as part of its LR application (LRA). For the plant CLBs that include mandated inspection or analysis requirements for RV internals either in the operating license for the facility or in the facility TS, the applicant/licensee shall compare the mandated requirements with the recommendations in the NRC-approved version of MRP-227. If the mandated requirements differ from the recommended criteria in MRP-227, as approved by the NRC, the conditions in the applicable license conditions or TS requirements take precedence over the MRP recommendations and shall be complied with.

5. Pursuant to 10 CFR 54.21(c)(1), the applicant is required to identify all analyses in the CLB for their RVI components that conform to the definition of a TLAA in 10 CFR 54.3 and shall identify these analyses as TLAAs for the application in accordance with the TLAA identification requirement in 10 CFR 54.21(c)(1). MRP-227, as approved by the NRC, does not specifically address the resolution of TLAAs that may apply to applicant/licensee RVI components. Hence, applicants/licensees who implement MRP-227, as approved by the NRC, shall still evaluate the CLB for their facilities to determine if they have plant-specific TLAAs that shall be addressed. If so, the applicant’s/licensee’s TLAA shall be submitted for NRC review along with the applicant’s/licensee’s application to implement the NRC-approved version of MRP-227.

   For those cumulative usage factor (CUF) analyses that are TLAAs, the applicant may use the PWR Vessel Internals Program as the basis for accepting these CUF analyses in accordance with 10 CFR 54.21(c)(1)(iii) only if the RVI components in the CUF analyses are periodically inspected for fatigue-induced cracking in the components during the period of extended operation. The periodicity of the inspections of these components shall be justified to be adequate to resolve the TLAA. Otherwise, acceptance of these TLAAs shall be done in accordance with either 10 CFR 54.21(c)(1)(i) or (ii), or in accordance with 10 CFR 54.21(c)(1)(iii) using the applicant’s program that corresponds to NUREG-1801, Revision 2, AMP X.M1, “Metal Fatigue of Reactor Coolant Pressure Boundary Program”. To satisfy the evaluation requirements of ASME Code, Section III, Subsection NG-2160 and NG-3121, the existing fatigue CUF analyses should include the effects of the reactor coolant system water environment.

This is Applicant/Licensee Action Item 8, and it is addressed in Section 4.2.8 of this SE.

3.6 Evaluation of MRP-227, Revision 0 - Appendix A

The staff reviewed Appendix A of MRP-227, Revision 0 which originally addressed 3 of the 10 program attributes of an AMP. The staff noted that discussion of the three AMP attributes in the MRP-227, Revision 0, Appendix A did not entirely conform to the NRC's recommended program element criteria for AMPs that are given in Section A.1.2.3 of NRC Branch Technical Position RLSB-1. In the MRP response to RAI Set 4, the MRP stated that Appendix A in MRP-227-Rev. 0 would be deleted entirely from the scope of the report and replaced with a new Appendix A entitled Operating Experience Summary.

It was the staff's intent to use the information provided in MRP-227, Revision 0, Appendix A to develop Revision 2 of NUREG-1801, AMP XI.M16A, "PWR Vessel Internals Program." By letter dated November 12, 2009, the staff requested that the MRP provide additional information in a format that conforms to the recommended program element criteria in Section A.1.2.3 of NRC Branch Technical Position RLSB-1 that could be used to develop NUREG-1801, Revision 2, AMP XI.M16A and that could be adopted for the contents of an applicant's PWR RVI AMP. By letter dated December 2, 2009, the MRP provided a revised AMP that the MRP recommended for the development of the NUREG-1801, Revision 2. AMP XI.M16A in NUREG-1801, Revision 2 (or in subsequent revisions of NUREG-1801 that follow) is the staff's recommended AMP for PWR RV internal components.

When the approved version of MRP-227 is published, MRP-227, Appendix A shall be updated to include a reference to AMP XI.M16A, in NUREG-1801, Revision 2 (or in subsequent revisions of the GALL report that follow) and the Operating Experience Summary that is mentioned in the MRP's response to RAI Set 4. **This is addressed as Topical Report Condition 7 in Section 4.1.7 of this SE.**

4.0 CONDITIONS AND LIMITATIONS AND APPLICANT/LICENSEE PLANT-SPECIFIC ACTION ITEMS

Based on its review, the staff identified some issues and concerns in Section 3.0 of this SE that were not adequately resolved regarding the implementation of MRP-227. Some of the staff's issues that are not adequately resolved and remaining concerns are related to conditions and limitations on the use of MRP-227. These conditions and limitations address deficiencies in the AMP defined by MRP-227, Revision 0 and are identified in Section 4.1 of this SE. In addition, some of the staff's issues and concerns that were not adequately resolved are related to applicant/licensee action items related to the use of MRP-227. These plant-specific actions items address topics related to the implementation of MRP-227 that could not be effectively addressed on a generic basis in MRP-227, Revision 0 and are identified in Section 4.2 of this SE.

4.1 Limitations and Conditions on the Use of MRP-227, Revision 0

4.1.1 High Consequence Components in the "No Additional Measures" Inspection Category

As discussed in Section 3.2.2 of this SE, the staff determined that certain high consequence of failure components were binned in the MRP-227, Revision 0 "No Additional Measures" inspection category. To ensure that the structural integrity and functionality of these RVI components are maintained under all licensing basis conditions during the period of extended operation, the staff has determined that each of these components shall be included in the "Expansion" inspection category in the NRC-approved version of MRP-227. The examination method to be used for these additional "Expansion" inspection category components shall be consistent with the examination method for the "Primary" inspection category component to which they are linked. The "Primary" inspection category components to which these additional "Expansion" inspection category components shall be linked is shown below.

Component	Link to "Primary" Inspection Category Components
Upper core plate in Westinghouse-designed reactors	CRGT lower flange weld
Lower support forging or casting in Westinghouse-designed reactors	CRGT lower flange weld
Lower core support beams in CE-designed reactors	Upper core support barrel flange weld
Core support barrel assembly upper cylinder and upper core barrel flange in CE-designed reactors	Upper core support barrel flange weld

The examination coverage and re-examination frequency requirements for these "Expansion" inspection category components shall be as addressed in Sections 4.1.4 and 4.1.6 of this SE.

When publishing the approved version of MRP-227, Revision 0, Tables 4-4, 4-5, and 4-6 in MRP-227, Revision 0 shall be revised accordingly. **This is Topical Report Condition 1.**

4.1.2 Inspection of Components Subject to Irradiation-Assisted Stress Corrosion Cracking

As discussed in Section 3.2.3 of this SE, the staff noted that there are inconsistencies between the degradation mechanisms between some of the "Primary" and associated "Expansion" inspection category components in Westinghouse and CE-designed reactors. The MRP identified IASCC and neutron embrittlement as the degradation mechanisms for the following "Expansion" inspection category components, whereas SCC was identified as the degradation mechanism for the corresponding "Primary" inspection category components. The following table identifies the subject "Expansion" inspection category components and their corresponding tables from MRP-227, Revision 0.

"Expansion" Inspection Category Components Subject to IASCC	Tables in MRP-227, Revision 0
Upper and lower core barrel welds in Westinghouse-designed reactors	Table 4-6
Lower core barrel flange weld in Westinghouse-designed reactors	Table 4-6
Core support barrel assembly lower cylinder welds and upper core barrel flange in CE-designed reactors	Table 4-5

To ensure that the structural integrity and functionality of these RVI components are maintained under all licensing basis conditions during the period of extended operation, the staff has determined that each of these components shall be included in the "Primary" inspection category in the NRC-approved version of MRP-227. The examination methods shall be consistent with the MRP's recommendations for these components, the examination coverage for these components shall conform to the criteria described in Section 3.3.1 of this SE, and the re-examination frequency shall be on a 10-year interval consistent with other "Primary" inspection category components.

When publishing the approved version of MRP-227, Revision 0 Tables 4-2 and 4-3 shall be revised accordingly. **This is Topical Report Condition 2.**

4.1.3 Inspection of High Consequence Components Subject to Multiple Degradation Mechanisms

As discussed in Section 3.2.4 of this SE, the staff determined that two high consequence of failure components subject to important combinations of multiple degradation mechanisms were binned in the MRP-227, Revision 0 "Expansion" inspection category. The following table includes the identification of these components and their corresponding tables from MRP-190 used in FMECA process.

Component	Relevant Table
Flow distributor-to-shell forging bolts in B&W-designed reactors	Table 4-4
Core support column (casting or wrought) welds in lower support structure in CE-designed reactors	Table 4-5

To ensure that the structural integrity and functionality of these RVI components are maintained under transient loading conditions during the period of extended operation, the staff has determined that the subject components shall be included in the "Primary" inspection category

in the NRC-approved version of MRP-227. The examination methods shall be consistent with the MRP's recommendations for these components, the examination coverage for the aforementioned components shall conform to the criteria as described in Section 3.3.1 of this SE, and the re-examination frequency shall be on a 10-year interval similar to other "Primary" inspection category components.

When publishing the approved version of MRP-227, Revision 0, Tables 4-1 and 4-2 in MRP-227, Revision 0 shall be revised accordingly. **This is Topical Report Condition 3.**

4.1.4 Imposition of Minimum Examination Coverage Criteria for "Expansion" Inspection Category Components

As discussed in Section 3.3.1 of this SE, for "Primary" inspection category components, the MRP has proposed to revise MRP-227, Revision 0 to require that 75 percent of a "Primary" inspection category component's total (accessible + inaccessible) inspection area or volume be examined or, when addressing a set of like components (e.g., bolting), that the inspection examine a minimum sample size of 75 percent of the total population of like components. For the inspection of a set of like components, it is understood that essentially 100 percent of the volume/area of each accessible like component will be examined. This defines the minimum inspection required to meet the intent of MRP-227, Revision 0 provided that no defects are discovered during the inspection. If defects are discovered during the inspection, the licensee shall enter that information into the plant's corrective action program and evaluate whether the results of the examination ensure that the component (or set of like components) will continue to meet its intended function under all licensing basis conditions of operation until the next scheduled examination.

As discussed in Section 3.3.2 of this SE, an equivalent requirement shall be imposed for the inspection of components in the MRP-227, Revision 0 "Expansion" inspection category. When the approved version of MRP-227 is published, Tables 4-4, 4-5, and 4-6 shall be updated to include this requirement. **This is Topical Report Condition 4.**

4.1.5 Examination Frequencies for Baffle-Former Bolts and Core Shroud Bolts

As discussed in Section 3.3.3 of this SE, Tables 4-1, 4-2, and 4-3 of MRP-227, Revision 0 indicate that the frequency of examinations for the baffle-former bolts of B&W and Westinghouse-designed reactors and core shroud bolts in CE-designed reactors can vary from 10 to 15 years. However, the staff notes that the MRP-227, Revision 0 report provides too much latitude with insufficient oversight of an applicant's/licensee's determination of its examination frequency. Hence, the staff has determined that the NRC-approved version of MRP-227 shall specify a 10-year inspection frequency for these components following the initial or baseline inspection unless an applicant/licensee provides an evaluation for NRC staff approval that justifies a longer interval between inspections. MRP-227, Revision 0 Tables 4-1, 4-2, and 4-3 shall be modified when the approved version of MRP-227 is published to reflect this change. **This is Topical Report Condition 5.**

4.1.6 Periodicity of the Re-examination of "Expansion" Inspection Category Components

As discussed in Section 3.3.4 of this SE, MRP-227, Revision 0, Tables 4-4, 4-5, and 4-6 shall be modified when the approved version of MRP-227 is published to apply a baseline 10-year re-

examination interval to all “Expansion” inspection category components (once degradation is identified in the associated “Primary” inspection category component and examination of the “Expansion” category component commences) unless an applicant/licensee provides an evaluation for NRC staff approval that justifies a longer interval between inspections. **This is Topical Report Condition 6.**

4.1.7 Updating of MRP-227, Revision 0, Appendix A

As discussed in Section 3.6 of this SE, when the approved version of MRP-227 is published, MRP-227, Appendix A shall be updated to include a reference to AMP XI.M16A in NUREG-1801, Revision 2 (or in subsequent revisions of the GALL report that follow) and the Operating Experience Summary. **This is Topical Report Condition 7.**

4.2 Plant-Specific Action Items

4.2.1 Applicability of FMECA and Functionality Analysis Assumptions

As addressed in Section 3.2.5.1 of this SE, each applicant/licensee is responsible for assessing its plant’s design and operating history and demonstrating that the approved version of MRP-227 is applicable to the facility. Each applicant/licensee shall refer, in particular, to the assumptions regarding plant design and operating history made in the FMECA and functionality analyses for reactors of their design (i.e., Westinghouse, CE, or B&W) which support MRP-227 and describe the process used for determining plant-specific differences in the design of their RVI components or plant operating conditions, which result in different component inspection categories. The applicant/licensee shall submit this evaluation for NRC review and approval as part of its application to implement the approved version of MRP-227. **This is Applicant/Licensee Action Item 1.**

4.2.2 PWR Vessel Internal Components Within the Scope of License Renewal

As discussed in Section 3.2.5.2 of this SE, consistent with the requirements addressed in 10 CFR 54.4, each applicant/licensee is responsible for identifying which RVI components are within the scope of LR for its facility. Applicants/licensees shall review the information in Tables 4-1 and 4-2 in MRP-189, Revision 1, and Tables 4-4 and 4-5 in MRP-191 and identify whether these tables contain all of the RVI components that are within the scope of LR for their facilities in accordance with 10 CFR 54.4. If the tables do not identify all the RVI components that are within the scope of LR for its facility, the applicant or licensee shall identify the missing component(s) and propose any necessary modifications to the program defined in MRP-227, as modified by this SE, when submitting its plant-specific AMP. The AMP shall provide assurance that the effects of aging on the missing component(s) will be managed for the period of extended operation. **This issue is Applicant/Licensee Action Item 2.**

4.2.3 Evaluation of the Adequacy of Plant-Specific Existing Programs

As addressed in Section 3.2.5.3 in this SE, applicants/licensees of CE and Westinghouse are required to perform plant-specific analysis either to justify the acceptability of an applicant’s/licensee’s existing programs, or to identify changes to the programs that should be implemented to manage the aging of these components for the period of extended operation. The results of this plant-specific analyses and a description of the plant-specific programs being

relied on to manage aging of these components shall be submitted as part of the applicant's/licensee's AMP application. The CE and Westinghouse components identified for this type of plant-specific evaluation include: CE thermal shield positioning pins and CE in-core instrumentation thimble tubes (Section 4.3.2 in MRP-227, Revision 0), and Westinghouse guide tube support pins (split pins) (Section 4.3.3 in MRP-227, Revision 0). **This is Applicant/Licensee Action item 3.**

4.2.4 B&W Core Support Structure Upper Flange Stress Relief

As discussed in Section 3.2.5.4 of this SE, the B&W applicants/licensees shall confirm that the core support structure upper flange weld was stress relieved during the original fabrication of the RPV in order to confirm the applicability of MRP-227, as approved by the NRC, to their facility. If the upper flange weld has not been stress relieved, then this component shall be inspected as a "Primary" inspection category component. If necessary, the examination methods and frequency for non-stress relieved B&W core support structure upper flange welds shall be consistent with the recommendations in MRP-227, as approved by the NRC, for the Westinghouse and CE upper core support barrel welds. The examination coverage for this B&W flange weld shall conform to the staff's imposed criteria as described in Sections 3.3.1 and 4.3.1 of this SE. The applicant's/licensee's resolution of this plant-specific action item shall be submitted to the NRC for review and approval. **This is Applicant/Licensee Action Item 4.**

4.2.5 Application of Physical Measurements as part of I&E Guidelines for B&W, CE, and Westinghouse RVI Components

As addressed in Section 3.3.5 in this SE, applicants/licensees shall identify plant-specific acceptance criteria to be applied when performing the physical measurements required by the NRC-approved version of MRP-227 for loss of compressibility for Westinghouse hold down springs, and for distortion in the gap between the top and bottom core shroud segments in CE units with core barrel shrouds assembled in two vertical sections. Based on results of the plant-specific evaluation discussed in Section 3.3.5, B&W baffle-to-baffle bolts and core barrel-to-former bolts may also require physical examination. The applicant/licensee shall include its proposed acceptance criteria and an explanation of how the proposed acceptance criteria are consistent with the plants' licensing basis and the need to maintain the functionality of the component being inspected under all licensing basis conditions of operation as part of their submittal to apply the approved version of MRP-227. **This is Applicant/Licensee Action Item 5.**

4.2.6 Evaluation of Inaccessible B&W Components

As addressed in Section 3.3.6 in this SE, the MRP does not propose to inspect the following inaccessible components: the B&W core barrel cylinders (including vertical and circumferential seam welds), B&W former plates, B&W external baffle-to-baffle bolts and their locking devices, B&W core barrel-to-former bolts and their locking devices, and B&W core support shield vent valve disc shafts or hinge pins.

Applicants/licensees will justify the acceptability of these components for continued operation through the period of extended operation by performing an evaluation, or by proposing a scheduled replacement of the components. As part of their application to implement MRP-227, applicants/licensees shall provide their justification for the continued operability of each of the

inaccessible components and, if necessary, provide their plan for the replacement of the components for NRC review and approval. **This is Applicant/Licensee Action Item 6.**

4.2.7 Plant-Specific Evaluation of CASS Materials

As discussed in Section 3.3.7 of this SE, the applicants/licensees of B&W, CE, and Westinghouse reactors are required to develop plant-specific analyses to be applied for their facilities to demonstrate that B&W IMI guide tube assembly spiders and CRGT spacer castings, CE lower support columns, and Westinghouse lower support column bodies will maintain their functionality during the period of extended operation. These analyses should also consider the possible loss of fracture toughness in these components due to thermal and irradiation embrittlement. The plant-specific analysis shall be consistent with the plant's licensing basis and the need to maintain the functionality of the components being evaluated under all licensing basis conditions of operation. The applicants/licensees shall include the plant-specific analysis as part of their submittal to apply the approved version of MRP-227. **This is Applicant/Licensee Action Item 7.**

4.2.8 Submittal of Information for Staff Review and Approval

As addressed in Section 3.5.1 in this SE, applicants/licensees shall make a submittal for NRC review and approval to credit their implementation of MRP-227, as amended by this SE, as an AMP for the RVI components at their facility. This submittal shall include the information identified in Section 3.5.1 of this SE. **This is Applicant/Licensee Action Item 8.**

5.0 CONCLUSIONS

The staff has reviewed MRP-227, Revision 0 and concludes that MRP-227, as modified by the conditions and limitations and applicant/licensee action items summarized in Section 4.0 of this SE, provides for the development of an AMP for PWR RVI components within the scope of the report which will adequately manage their aging effects such that there is reasonable assurance that they will perform their intended functions in accordance with the CLB during the extended period of operation.

Any applicant may reference this MRP-227, Revision 0, as modified by this SE, in a LRA to satisfy the requirements of 10 CFR 54.21(a)(3) for demonstrating that the effects of aging on the RVI components within the scope of this topical report will be adequately managed. The staff also concludes that, upon completion of plant-specific action items set forth in Section 4.0, referencing this topical report in a LRA and summarizing the AMP contained in this topical report in a FSAR supplement will provide the staff with sufficient information to make necessary findings required by Section 54.29(a)(1) for RVI components within the scope of MRP-227, as approved by the NRC.

6.0 REFERENCES

The following MRP reports and supporting information was submitted for information only, and these supporting documents were used by the staff as part of its review of the MRP-227, Revision 0 report.

1. NUREG-1801 Revision 2, “Generic Aging Lessons Learned (GALL).

2. MRP-175 Revision 0, “Materials Reliability Program: PWR Internals Material Aging Degradation Mechanism Screening and Threshold Values,” ADAMS Accession Number ML063470637.

3. MRP-189 Revision 1, “Materials Reliability Program: Screening, Categorization, and Ranking of B& W-Designed PWR Internals,” ADAMS Accession Number ML092250189.

4. MRP-190 Revision 0, “Materials Reliability Program: Failure Modes, Effects, and Criticality Analysis of B&W-Designed PWR Internals,” ADAMS Accession Number ML091910128.

5. MRP-191 Revision 0, “Materials Reliability Program: Screening, Categorization and Ranking of Reactor Internals of Westinghouse and Combustion Engineering PWR Designs,” ADAMS Accession Number ML091910130.

6. MRP-210 Revision 0, “Materials Reliability Program: Fracture Toughness Evaluation of Highly Irradiated PWR Stainless Steel Internal Components,” ADAMS Accession Number ML092230736.

7. MRP-211 Revision 0, “Materials Reliability Program: PWR Internals: Age Related Material Properties Degradation Mechanisms, Models and Basis Data,” ADAMS Accession Number ML093020614.

8. MRP-228 Revision 0, “Materials Reliability Program: Inspection Standard for PWR Internals,” ADAMS Accession Number ML092120574.

9. MRP-229 Revision 3, “Materials Reliability Program: Functionality Analysis for B& W Representative PWR Internals,” ADAMS Accession Numbers ML110280110, ML110280111, and ML110280112.

10. MRP-230 Revision 1,” Materials Reliability Program: Functionality Analysis for Westinghouse and Combustion Engineering Representative PWR Internals,” ADAMS Accession Numbers ML093210269, ML093210270, and ML093210271.

11. MRP-231 Revision 2, “Materials Reliability Program: Aging Management Strategies for B& WPWR Internals,” ADAMS Accession Number ML110280113.

12. MRP-232 Revision 0, “Materials Reliability Program: Aging Management Strategies for Westinghouse and Combustion Engineering PWR Internals,” ADAMS Accession Numbers ML091671780, ML092250192, and ML092230745.

13. MRP-276 Revision 0, “Materials Reliability Program: Thermal Aging and Neutron Embrittlement Assessment of Cast Austenitic Stainless Steel Welds in PWR Internals” ADAMS Accession Number ML102950165.

14. WCAP-17096-NP, Revision 2, “Reactor Internals Acceptance Criteria Methodology and Data Requirements,” ADAMS Accession Number ML101460157.

15. Response to the staff RAIs dated August 24, 2009, ADAMS Accession Number ML092870179.

16. Response to the staff RAIs dated November 12, 2009 ADAMS Accession Number ML101120660.

17. Response to the staff RAIs dated September 30, 2010, ADAMS Accession Number ML103160381.

Principal Contributor: Ganesh Cheruvenki

Date: June 22, 2011

Entergy New Contention NYS-38/RK-TC-5
Attachment 11

Entergy

Entergy Nuclear Northeast
Indian Point Energy Center
450 Broadway, GSB
P.O. Box 249
Buchanan, NY 10511-0249
Tel (914) 788-2055

Fred Dacimo
Vice President
Operations License Renewal

NL-11-101

August 22, 2011

U.S. Nuclear Regulatory Commission
ATTN: Document Control Desk
Washington, DC 20555-0001

SUBJECT: Clarification for Request for Additional Information (RAI)
Aging Management Programs
Indian Point Nuclear Generating Unit Nos. 2 & 3
Docket Nos. 50-247 and 50-286
License Nos. DPR-26 and DPR-64

REFERENCE:

1. NRC Letter, "Request for Additional Information for the Review of the Indian Point Nuclear Generating Unit Numbers 2 and 3, License Renewal Application," dated June 15, 2011
2. Entergy letter (NL-11-032),"Response to Request for Additional Information (RAI) Aging Management Programs," dated March 28, 2011
3. Entergy letter (NL-11-074),"Response to Request for Additional Information (RAI) Aging Management Programs," dated July 14, 2011
4. Entergy letter (NL-11-090),"Clarification for Request for Additional Information (RAI) Aging Management Programs," dated July 27, 2011
5. Entergy letter (NL-11-096),"Clarification for Request for Additional Information (RAI) Aging Management Programs," dated August 9, 2011
6. Entergy letter (NL-10-063),"Amendment 9 to License Renewal Application (LRA) – Reactor Vessel Internals Program," dated July 14, 2010

Dear Sir or Madam:

Entergy Nuclear Operations, Inc is providing, in Attachment 1, clarifications of the responses in References 2, 3, 4 and 5. Attachment 2 provides the latest list of regulatory commitments including revisions to commitments discussed in this letter.

A128
NRR

In Reference 6 Entergy submitted Amendment 9 to the License Renewal Application regarding the Reactor Vessel Internals Program. Attachment 3 provides errata to that Program.

If you have any questions, or require additional information, please contact Mr. Robert Walpole at 914-734-6710.

I declare under penalty of perjury that the foregoing is true and correct. Executed on 3/22/11.

Sincerely,

FRD/rw

Attachment: 1. Clarification of Responses to Requests for Additional Information (RAIs) and Commitment List

Attachment: 2. IPEC List of Regulatory Commitments (Rev. 17)

Attachment 3. Amendment 9 to the License Renewal Application (LRA) – Reactor Vessel Inspection Program Errata

cc: Mr. William Dean, Regional Administrator, NRC Region I
Mr. Sherwin E. Turk, NRC Office of General Counsel, Special Counsel
Mr. Dave Wrona, NRC Branch Chief, Engineering Review Branch I
Mr. John Boska, NRR Senior Project Manager
Mr. Robert Kuntz, NRR Senior Project Manager
Mr. Paul Eddy, New York State Department of Public Service
NRC Resident Inspector's Office
Mr. Francis J. Murray, Jr., President and CEO NYSERDA

ATTACHMENT 1 TO NL-11-101

LICENSE RENEWAL APPLICATION
CLARIFICATION OF RESPONSES TO REQUESTS FOR ADDITIONAL INFORMATION (RAIs) AND COMMITMENT LIST

ENTERGY NUCLEAR OPERATIONS, INC.
INDIAN POINT NUCLEAR GENERATING UNIT NOS. 2 & 3
DOCKET NOS. 50-247 AND 50-286

INDIAN POINT NUCLEAR GENERATING UNIT NOS. 2 AND 3
LICENSE RENEWAL APPLICATION
CLARIFICATION OF RESPONSES TO REQUESTS FOR ADDITIONAL INFORMATION (RAIs) AND COMMITMENT LIST

Introduction

Entergy has made regulatory commitments relating to managing the effects of aging on certain structures and components during the period of extended operation. These commitments are included in a number of transmittal letters as identified in the commitment list contained in Attachment 2. The NRC Safety Evaluation Report (SER), issued as NUREG-1930, also contains the commitments made up to the time of its issue.

Entergy has reviewed the commitment transmittal letters and the SER. As a result of the review certain commitments made by Entergy require minor revision. A large majority of these revisions are editorial and do not alter the intent of the commitment. In addition, there are certain instances where the SER commitment list contains minor deviations from the Entergy commitment. The results of the review are documented below.

Changes to Entergy Commitments

Commitment 3

In NL-11-074, Entergy inadvertently changed this commitment due to an administrative error. The change was not identified as a change and NL-11-074 was not identified as a source document. This commitment is being restored to the version provided in NL-11-032.

NL-11-101 has been added as a source document in the list of regulatory commitments.

Commitment 11

A minor grammatical error is corrected here by replacing "Delete commitment." by "Deleted".

NL-11-101 has been added as a source document in the list of regulatory commitments.

Commitment 15

The correct title for NUREG-1801 Section XI.E3 is "Inaccessible Medium Voltage Cables Not Subject To 10 CFR 50.49 Environmental Qualification Requirements." This supersedes the title change identified in NL-11-032 and the NL-11-096 commitment list.

NL-11-101 has been added as a source document in the list of regulatory commitments.

Commitment 25

In NL-11-074, Entergy inadvertently changed this commitment due to an administrative error. The change was not identified as a change and NL-11-074 was not identified as a source document. This commitment is being restored to the version provided in NL-11-032 by deleting "(PEO)" at the end of the commitment.

NL-11-101 has been added as a source document in the list of regulatory commitments.

Commitment 34

In NL-11-032, Entergy introduced a typographical error by changing "50.59(c)(1)" to "50.59l(1)." That error is corrected here.

NL-11-101 has been added as a source document in the list of regulatory commitments.

Commitments 35 and 36

There are minor editorial differences between the commitments and the SER. The commitments have been revised to match the SER by changing "extended period of operation" to "period of extended operation" in commitment 35 and changing "Inspection" to "inspection" in commitment 36.

NL-11-101 has been added as a source document in the list of regulatory commitments.

Commitment 41

In NL-11-074, Entergy discussed and made changes to Commitment 41. In addition to the changes discussed in the letter, Entergy inadvertently made editorial changes to portions of this commitment due to an administrative error. These changes were not identified as a change in the commitment list. This commitment is being revised to correct the inadvertent editorial changes.

NL-11-101 has been added as a source document in the list of regulatory commitments.

Commitment 43

In NL-11-074, Entergy inadvertently changed the implementation schedule to IP2: Prior to September 28, 2023 and IP3: Prior to December 12, 2025. This change was corrected in NL-11-090 but the change was neither identified as a change nor discussed. Therefore, changes to the commitment are not required.

In order to provide traceability NL-11-101 has been added as a source document in the list of regulatory commitments.

Commitments 44 and 45

For consistency with other similar commitments the implementation schedule has been revised from "Within 60 days of issuance of the renewed operating license" to "IP2: Prior to September 28, 2013 IP3: Prior to December 12, 2015".

NL-11-101 has been added as a source document in the list of regulatory commitments.

Commitment 45

A minor grammatical error is corrected here by replacing "has" by "have".

NL-11-101 has been added as a source document in the list of regulatory commitments.

Minor differences between the SER and Entergy commitments

Commitment 1

The words "Above Ground" were used instead of "Aboveground".

Commitments 3, 15, 16 and 17

The word "program" is missing following "corresponding" in the second paragraph of each commitment. In addition, in Commitment 17 "50.39" should be "50.49".

Commitment 4

The word "surface" was added to the SER in the third paragraph following "bottom".

The next to last paragraph in the SER reads "Revise applicable procedures to direct sampling of the onsite portable fuel oil contents prior to transferring the contents prior to transferring the contents to storage" while the Entergy commitment reads "Revise applicable procedures to direct sampling of the onsite portable fuel oil contents prior to transferring the contents to the storage tanks".

In NL-08-057, Entergy revised the commitment by adding "EDG fuel oil storage tanks" without identifying the change as a change. In accordance with NL-08-057 the third paragraph in the SER should read ".....IP3: EDG fuel oil day tanks, EDG fuel oil storage tanks, Appendix R fuel oil storage tank, and diesel fire pump fuel oil storage tank."

Commitment 8

In NL-07-153, Entergy identified a change to the second paragraph of Commitment 8 that replaced "inspect" by "replace all or test".

In NL-08-014, Entergy identified a change to the fourth paragraph of Commitment 8 that deleted "the IP3". The statement is applicable to both IP2 and IP3.

Commitment 10

In NL-09-018, Entergy identified a change to the fourth paragraph of Commitment 10 that replaced "unacceptable signs of degradation" by "indication of tube erosion, vibration wear, corrosion, pitting, fouling, or scaling".

Commitments 11 and 39

The words "not applicable" were added in the SER under LRA section and implementation schedule columns.

Commitment 13

In NL-07-153, Entergy identified a change to the fourth paragraph of Commitment 13 that added the words "such as thermography or contact resistance measurements".

The words "metal-enclosed bus" in the second paragraph were added to the SER in place of "MEB".

Commitment 18

There is a minor editorial difference in the first paragraph. The SER says "the oil analysis" and the Entergy commitment says "oil analysis".

Commitment 21

The word "extended" is missing.

Commitment 30

The word "and" is missing prior to (3) and the Entergy commitment implementation schedule dates should be IP2: September 28, 2011 and IP3: December 12, 2013.

Commitment 32

"10 CFR 50.61(b) 4)" should read "10 CFR 50.61(b)(4)".

In addition to the commitment review Entergy provides below an update to the implementation of Commitment 30.

Inspection Plan for Reactor Internals

This inspection plan that Entergy will submit by September 28, 2011 is responsive to RIS 2011-007 for Category C plants. This inspection plan will include the inspections specified in MRP-227, as modified by the conditions and limitations and applicant/licensee action items in the NRC SER on MRP-227, Revision 0. In accordance with guidance on the NRC website, EPRI is expected to publish an accepted version of MRP-227, designated MRP-227-A, which will incorporate the NRC SER. Following issuance of MRP-227-A, Entergy will review the inspection plan to determine the need for revision, and will modify the inspection plan to include the necessary revisions, if any.

ATTACHMENT 2 TO NL-11-101

LICENSE RENEWAL APPLICATION
IPEC LIST OF REGULATORY COMMITMENTS

Rev. 17

ENTERGY NUCLEAR OPERATIONS, INC.
INDIAN POINT NUCLEAR GENERATING UNIT NOS. 2 & 3
DOCKET NOS. 50-247 AND 50-286

List of Regulatory Commitments

Rev. 17

The following table identifies those actions committed to by Entergy in this document.

Changes are shown as strikethroughs for ~~deletions~~ and underlines for additions.

#	COMMITMENT	IMPLEMENTATION SCHEDULE	SOURCE	RELATED LRA SECTION / AUDIT ITEM
1	Enhance the Aboveground Steel Tanks Program for IP2 and IP3 to perform thickness measurements of the bottom surfaces of the condensate storage tanks, city water tank, and fire water tanks once during the first ten years of the period of extended operation. Enhance the Aboveground Steel Tanks Program for IP2 and IP3 to require trending of thickness measurements when material loss is detected.	IP2: September 28, 2013 IP3: December 12, 2015	NL-07-039	A.2.1.1 A.3.1.1 B.1.1
2	Enhance the Bolting Integrity Program for IP2 and IP3 to clarify that actual yield strength is used in selecting materials for low susceptibility to SCC and clarify the prohibition on use of lubricants containing MoS_2 for bolting. The Bolting Integrity Program manages loss of preload and loss of material for all external bolting.	IP2: September 28, 2013 IP3: December 12, 2015	NL-07-039 NL-07-153	A.2.1.2 A.3.1.2 B.1.2 Audit Items 201, 241, 270

#	COMMITMENT	IMPLEMENTATION SCHEDULE	SOURCE	RELATED LRA SECTION / AUDIT ITEM
3	Implement the Buried Piping and Tanks Inspection Program for IP2 and IP3 as described in LRA Section B.1.6. This new program will be implemented consistent with the corresponding program described in NUREG-1801 Section XI.M34, Buried Piping and Tanks Inspection. Include in the Buried Piping and Tanks Inspection Program described in LRA Section B.1.6 a risk assessment of in-scope buried piping and tanks that includes consideration of the impacts of buried piping or tank leakage and of conditions affecting the risk for corrosion. Classify pipe segments and tanks as having a high, medium or low impact of leakage based on the safety class, the hazard posed by fluid contained in the piping and the impact of leakage on reliable plant operation. Determine corrosion risk through consideration of piping or tank material, soil resistivity, drainage, the presence of cathodic protection and the type of coating. Establish inspection priority and frequency for periodic inspections of the in-scope piping and tanks based on the results of the risk assessment. Perform inspections using inspection techniques with demonstrated effectiveness ~~direct visual inspection~~.	IP2: September 28, 2013 IP3: December 12, 2015	NL-07-039 NL-07-153 NL-09-106 NL-09-111 NL-11-101	A.2.1.5 A.3.1.5 B.1.6 Audit Item 173

#	COMMITMENT	IMPLEMENTATION SCHEDULE	SOURCE	RELATED LRA SECTION / AUDIT ITEM
4	Enhance the Diesel Fuel Monitoring Program to include cleaning and inspection of the IP2 GT-1 gas turbine fuel oil storage tanks, IP2 and IP3 EDG fuel oil day tanks, IP2 SBO/Appendix R diesel generator fuel oil day tank, and IP3 Appendix R fuel oil storage tank and day tank once every ten years. Enhance the Diesel Fuel Monitoring Program to include quarterly sampling and analysis of the IP2 SBO/Appendix R diesel generator fuel oil day tank, IP2 security diesel fuel oil storage tank, IP2 security diesel fuel oil day tank, and IP3 Appendix R fuel oil storage tank. Particulates, water and sediment checks will be performed on the samples. Filterable solids acceptance criterion will be less than or equal to 10mg/l. Water and sediment acceptance criterion will be less than or equal to 0.05%. Enhance the Diesel Fuel Monitoring Program to include thickness measurement of the bottom of the following tanks once every ten years. IP2: EDG fuel oil storage tanks, EDG fuel oil day tanks, SBO/Appendix R diesel generator fuel oil day tank, GT-1 gas turbine fuel oil storage tanks, and diesel fire pump fuel oil storage tank; IP3: EDG fuel oil day tanks, EDG fuel oil storage tanks, Appendix R fuel oil storage tank, and diesel fire pump fuel oil storage tank. Enhance the Diesel Fuel Monitoring Program to change the analysis for water and particulates to a quarterly frequency for the following tanks. IP2: GT-1 gas turbine fuel oil storage tanks and diesel fire pump fuel oil storage tank; IP3: Appendix R fuel oil day tank and diesel fire pump fuel oil storage tank. Enhance the Diesel Fuel Monitoring Program to specify acceptance criteria for thickness measurements of the fuel oil storage tanks within the scope of the program. Enhance the Diesel Fuel Monitoring Program to direct samples be taken and include direction to remove water when detected. Revise applicable procedures to direct sampling of the onsite portable fuel oil contents prior to transferring the contents to the storage tanks. Enhance the Diesel Fuel Monitoring Program to direct the addition of chemicals including biocide when the presence of biological activity is confirmed.	IP2: September 28, 2013 IP3: December 12, 2015	NL-07-039 NL-07-153 NL-08-057	A.2.1.8 A.3.1.8 B.1.9 Audit items 128, 129, 132, 491, 492, 510

#	COMMITMENT	IMPLEMENTATION SCHEDULE	SOURCE	RELATED LRA SECTION / AUDIT ITEM
5	Enhance the External Surfaces Monitoring Program for IP2 and IP3 to include periodic inspections of systems in scope and subject to aging management review for license renewal in accordance with 10 CFR 54.4(a)(1) and (a)(3). Inspections shall include areas surrounding the subject systems to identify hazards to those systems. Inspections of nearby systems that could impact the subject systems will include SSCs that are in scope and subject to aging management review for license renewal in accordance with 10 CFR 54.4(a)(2).	IP2: September 28, 2013 IP3: December 12, 2015	NL-07-039	A.2.1.10 A.3.1.10 B.1.11
6	Enhance the Fatigue Monitoring Program for IP2 to monitor steady state cycles and feedwater cycles or perform an evaluation to determine monitoring is not required. Review the number of allowed events and resolve discrepancies between reference documents and monitoring procedures. Enhance the Fatigue Monitoring Program for IP3 to include all the transients identified. Assure all fatigue analysis transients are included with the lowest limiting numbers. Update the number of design transients accumulated to date.	IP2: September 28, 2013 IP3: December 12, 2015	NL-07-039 NL-07-153	A.2.1.11 A.3.1.11 B.1.12, Audit Item 164
7	Enhance the Fire Protection Program to inspect external surfaces of the IP3 RCP oil collection systems for loss of material each refueling cycle. Enhance the Fire Protection Program to explicitly state that the IP2 and IP3 diesel fire pump engine sub-systems (including the fuel supply line) shall be observed while the pump is running. Acceptance criteria will be revised to verify that the diesel engine does not exhibit signs of degradation while running; such as fuel oil, lube oil, coolant, or exhaust gas leakage. Enhance the Fire Protection Program to specify that the IP2 and IP3 diesel fire pump engine carbon steel exhaust components are inspected for evidence of corrosion and cracking at least once each operating cycle. Enhance the Fire Protection Program for IP3 to visually inspect the cable spreading room, 480V switchgear room, and EDG room CO_2 fire suppression system for signs of degradation, such as corrosion and mechanical damage at least once every six months.	IP2: September 28, 2013 IP3: December 12, 2015	NL-07-039	A.2.1.12 A.3.1.12 B.1.13

#	COMMITMENT	IMPLEMENTATION SCHEDULE	SOURCE	RELATED LRA SECTION / AUDIT ITEM
8	Enhance the Fire Water Program to include inspection of IP2 and IP3 hose reels for evidence of corrosion. Acceptance criteria will be revised to verify no unacceptable signs of degradation. Enhance the Fire Water Program to replace all or test a sample of IP2 and IP3 sprinkler heads required for 10 CFR 50.48 using guidance of NFPA 25 (2002 edition), Section 5.3.1.1.1 before the end of the 50-year sprinkler head service life and at 10-year intervals thereafter during the extended period of operation to ensure that signs of degradation, such as corrosion, are detected in a timely manner. Enhance the Fire Water Program to perform wall thickness evaluations of IP2 and IP3 fire protection piping on system components using non-intrusive techniques (e.g., volumetric testing) to identify evidence of loss of material due to corrosion. These inspections will be performed before the end of the current operating term and at intervals thereafter during the period of extended operation. Results of the initial evaluations will be used to determine the appropriate inspection interval to ensure aging effects are identified prior to loss of intended function. Enhance the Fire Water Program to inspect the internal surface of foam based fire suppression tanks. Acceptance criteria will be enhanced to verify no significant corrosion.	IP2: September 28, 2013 IP3: December 12, 2015	NL-07-039 NL-07-153 NL-08-014	A.2.1.13 A.3.1.13 B.1.14 Audit Items 105, 106

#	COMMITMENT	IMPLEMENTATION SCHEDULE	SOURCE	RELATED LRA SECTION / AUDIT ITEM
9	Enhance the Flux Thimble Tube Inspection Program for IP2 and IP3 to implement comparisons to wear rates identified in WCAP-12866. Include provisions to compare data to the previous performances and perform evaluations regarding change to test frequency and scope. Enhance the Flux Thimble Tube Inspection Program for IP2 and IP3 to specify the acceptance criteria as outlined in WCAP-12866 or other plant-specific values based on evaluation of previous test results. Enhance the Flux Thimble Tube Inspection Program for IP2 and IP3 to direct evaluation and performance of corrective actions based on tubes that exceed or are projected to exceed the acceptance criteria. Also stipulate that flux thimble tubes that cannot be inspected over the tube length and cannot be shown by analysis to be satisfactory for continued service, must be removed from service to ensure the integrity of the reactor coolant system pressure boundary.	IP2: September 28, 2013 IP3: December 12, 2015	NL-07-039	A.2.1.15 A.3.1.15 B.1.16

#	COMMITMENT	IMPLEMENTATION SCHEDULE	SOURCE	RELATED LRA SECTION / AUDIT ITEM
10	Enhance the Heat Exchanger Monitoring Program for IP2 and IP3 to include the following heat exchangers in the scope of the program. • Safety injection pump lube oil heat exchangers • RHR heat exchangers • RHR pump seal coolers • Non-regenerative heat exchangers • Charging pump seal water heat exchangers • Charging pump fluid drive coolers • Charging pump crankcase oil coolers • Spent fuel pit heat exchangers • Secondary system steam generator sample coolers • Waste gas compressor heat exchangers • SBO/Appendix R diesel jacket water heat exchanger (IP2 only) Enhance the Heat Exchanger Monitoring Program for IP2 and IP3 to perform visual inspection on heat exchangers where non-destructive examination, such as eddy current inspection, is not possible due to heat exchanger design limitations. Enhance the Heat Exchanger Monitoring Program for IP2 and IP3 to include consideration of material-environment combinations when determining sample population of heat exchangers. Enhance the Heat Exchanger Monitoring Program for IP2 and IP3 to establish minimum tube wall thickness for the new heat exchangers identified in the scope of the program. Establish acceptance criteria for heat exchangers visually inspected to include no indication of tube erosion, vibration wear, corrosion, pitting, fouling, or scaling.	IP2: September 28, 2013 IP3: December 12, 2015	NL-07-039 NL-07-153 NL-09-018	A.2.1.16 A.3.1.16 B.1.17, Audit Item 52
11	~~Delete commitment.~~ Deleted		NL-09-056 NL-11-101	

#	COMMITMENT	IMPLEMENTATION SCHEDULE	SOURCE	RELATED LRA SECTION / AUDIT ITEM
12	Enhance the Masonry Wall Program for IP2 and IP3 to specify that the IP1 intake structure is included in the program.	IP2: September 28, 2013 IP3: December 12, 2015	NL-07-039	A.2.1.18 A.3.1.18 B.1.19
13	Enhance the Metal-Enclosed Bus Inspection Program to add IP2 480V bus associated with substation A to the scope of bus inspected. Enhance the Metal-Enclosed Bus Inspection Program for IP2 and IP3 to visually inspect the external surface of MEB enclosure assemblies for loss of material at least once every 10 years. The first inspection will occur prior to the period of extended operation and the acceptance criterion will be no significant loss of material. Enhance the Metal-Enclosed Bus Inspection Program to add acceptance criteria for MEB internal visual inspections to include the absence of indications of dust accumulation on the bus bar, on the insulators, and in the duct, in addition to the absence of indications of moisture intrusion into the duct. Enhance the Metal-Enclosed Bus Inspection Program for IP2 and IP3 to inspect bolted connections at least once every five years if performed visually or at least once every ten years using quantitative measurements such as thermography or contact resistance measurements. The first inspection will occur prior to the period of extended operation. The plant will process a change to applicable site procedure to remove the reference to "re-torquing" connections for phase bus maintenance and bolted connection maintenance.	IP2: September 28, 2013 IP3: December 12, 2015	NL-07-039 NL-07-153 NL-08-057	A.2.1.19 A.3.1.19 B.1.20 Audit Items 124, 133, 519
14	Implement the Non-EQ Bolted Cable Connections Program for IP2 and IP3 as described in LRA Section B.1.22.	IP2: September 28, 2013 IP3: December 12, 2015	NL-07-039	A.2.1.21 A.3.1.21 B.1.22

#	COMMITMENT	IMPLEMENTATION SCHEDULE	SOURCE	RELATED LRA SECTION / AUDIT ITEM
15	Implement the Non-EQ Inaccessible Medium-Voltage Cable Program for IP2 and IP3 as described in LRA Section B.1.23. This new program will be implemented consistent with the corresponding program described in NUREG-1801 Section XI.E3, Inaccessible Medium-Voltage ~~Power~~ Cables Not Subject To 10 CFR 50.49 Environmental Qualification Requirements.	IP2: September 28, 2013 IP3: December 12, 2015	NL-07-039 NL-07-153 NL-11-032 NL-11-096 NL-11-101	A.2.1.22 A.3.1.22 B.1.23 Audit item 173
16	Implement the Non-EQ Instrumentation Circuits Test Review Program for IP2 and IP3 as described in LRA Section B.1.24. This new program will be implemented consistent with the corresponding program described in NUREG-1801 Section XI.E2, Electrical Cables and Connections Not Subject to 10 CFR 50.49 Environmental Qualification Requirements Used in Instrumentation Circuits.	IP2: September 28, 2013 IP3: December 12, 2015	NL-07-039 NL-07-153	A.2.1.23 A.3.1.23 B.1.24 Audit item 173
17	Implement the Non-EQ Insulated Cables and Connections Program for IP2 and IP3 as described in LRA Section B.1.25. This new program will be implemented consistent with the corresponding program described in NUREG-1801 Section XI.E1, Electrical Cables and Connections Not Subject to 10 CFR 50.49 Environmental Qualification Requirements.	IP2: September 28, 2013 IP3: December 12, 2015	NL-07-039 NL-07-153	A.2.1.24 A.3.1.24 B.1.25 Audit item 173
18	Enhance the Oil Analysis Program for IP2 to sample and analyze lubricating oil used in the SBO/Appendix R diesel generator consistent with the oil analysis for other site diesel generators. Enhance the Oil Analysis Program for IP2 and IP3 to sample and analyze generator seal oil and turbine hydraulic control oil. Enhance the Oil Analysis Program for IP2 and IP3 to formalize preliminary oil screening for water and particulates and laboratory analyses including defined acceptance criteria for all components included in the scope of this program. The program will specify corrective actions in the event acceptance criteria are not met. Enhance the Oil Analysis Program for IP2 and IP3 to formalize trending of preliminary oil screening results as well as data provided from independent laboratories.	IP2: September 28, 2013 IP3: December 12, 2015	NL-07-039 NL-11-101	A.2.1.25 A.3.1.25 B.1.26

#	COMMITMENT	IMPLEMENTATION SCHEDULE	SOURCE	RELATED LRA SECTION / AUDIT ITEM
19	Implement the One-Time Inspection Program for IP2 and IP3 as described in LRA Section B.1.27. This new program will be implemented consistent with the corresponding program described in NUREG-1801, Section XI.M32, One-Time Inspection.	IP2: September 28, 2013 IP3: December 12, 2015	NL-07-039 NL-07-153	A.2.1.26 A.3.1.26 B.1.27 Audit item 173
20	Implement the One-Time Inspection – Small Bore Piping Program for IP2 and IP3 as described in LRA Section B.1.28. This new program will be implemented consistent with the corresponding program described in NUREG-1801, Section XI.M35, One-Time Inspection of ASME Code Class I Small-Bore Piping.	IP2: September 28, 2013 IP3: December 12, 2015	NL-07-039 NL-07-153	A.2.1.27 A.3.1.27 B.1.28 Audit item 173
21	Enhance the Periodic Surveillance and Preventive Maintenance Program for IP2 and IP3 as necessary to assure that the effects of aging will be managed such that applicable components will continue to perform their intended functions consistent with the current licensing basis through the period of extended operation.	IP2: September 28, 2013 IP3: December 12, 2015	NL-07-039	A.2.1.28 A.3.1.28 B.1.29
22	Enhance the Reactor Vessel Surveillance Program for IP2 and IP3 revising the specimen capsule withdrawal schedules to draw and test a standby capsule to cover the peak reactor vessel fluence expected through the end of the period of extended operation. Enhance the Reactor Vessel Surveillance Program for IP2 and IP3 to require that tested and untested specimens from all capsules pulled from the reactor vessel are maintained in storage.	IP2: September 28, 2013 IP3: December 12, 2015	NL-07-039	A.2.1.31 A.3.1.31 B.1.32
23	Implement the Selective Leaching Program for IP2 and IP3 as described in LRA Section B.1.33. This new program will be implemented consistent with the corresponding program described in NUREG-1801, Section XI.M33 Selective Leaching of Materials.	IP2: September 28, 2013 IP3: December 12, 2015	NL-07-039 NL-07-153	A.2.1.32 A.3.1.32 B.1.33 Audit item 173
24	Enhance the Steam Generator Integrity Program for IP2 and IP3 to require that the results of the condition monitoring assessment are compared to the operational assessment performed for the prior operating cycle with differences evaluated.	IP2: September 28, 2013 IP3: December 12, 2015	NL-07-039	A.2.1.34 A.3.1.34 B.1.35

#	COMMITMENT	IMPLEMENTATION SCHEDULE	SOURCE	RELATED LRA SECTION / AUDIT ITEM
25	Enhance the Structures Monitoring Program to explicitly specify that the following structures are included in the program. • Appendix R diesel generator foundation (IP3) • Appendix R diesel generator fuel oil tank vault (IP3) • Appendix R diesel generator switchgear and enclosure (IP3) • city water storage tank foundation • condensate storage tanks foundation (IP3) • containment access facility and annex (IP3) • discharge canal (IP2/3) • emergency lighting poles and foundations (IP2/3) • fire pumphouse (IP2) • fire protection pumphouse (IP3) • fire water storage tank foundations (IP2/3) • gas turbine 1 fuel storage tank foundation • maintenance and outage building-elevated passageway (IP2) • new station security building (IP2) • nuclear service building (IP1) • primary water storage tank foundation (IP3) • refueling water storage tank foundation (IP3) • security access and office building (IP3) • service water pipe chase (IP2/3) • service water valve pit (IP3) • superheater stack • transformer/switchyard support structures (IP2) • waste holdup tank pits (IP2/3) Enhance the Structures Monitoring Program for IP2 and IP3 to clarify that in addition to structural steel and concrete, the following commodities (including their anchorages) are inspected for each structure as applicable. • cable trays and supports • concrete portion of reactor vessel supports • conduits and supports • cranes, rails and girders • equipment pads and foundations • fire proofing (pyrocrete) • HVAC duct supports • jib cranes • manholes and duct banks • manways, hatches and hatch covers • monorails	IP2: September 28, 2013 IP3: December 12, 2015	NL-07-039 NL-07-153 NL-08-057	A.2.1.35 A.3.1.35 B.1.36 Audit items 86, 87, 88, 417

#	COMMITMENT	IMPLEMENTATION SCHEDULE	SOURCE	RELATED LRA SECTION / AUDIT ITEM
	• new fuel storage racks • sumps, sump screens, strainers and flow barriers			
	Enhance the Structures Monitoring Program for IP2 and IP3 to inspect inaccessible concrete areas that are exposed by excavation for any reason. IP2 and IP3 will also inspect inaccessible concrete areas in environments where observed conditions in accessible areas exposed to the same environment indicate that significant concrete degradation is occurring.			
	Enhance the Structures Monitoring Program for IP2 and IP3 to perform inspections of elastomers (seals, gaskets, seismic joint filler, and roof elastomers) to identify cracking and change in material properties and for inspection of aluminum vents and louvers to identify loss of material.			
	Enhance the Structures Monitoring Program for IP2 and IP3 to perform an engineering evaluation of groundwater samples to assess aggressiveness of groundwater to concrete on a periodic basis (at least once every five years). IPEC will obtain samples from at least 5 wells that are representative of the ground water surrounding below-grade site structures and perform an engineering evaluation of the results from those samples for sulfates, pH and chlorides. Additionally, to assess potential indications of spent fuel pool leakage, IPEC will sample for tritium in groundwater wells in close proximity to the IP2 spent fuel pool at least once every 3 months.		NL-08-127	Audit Item 360
	Enhance the Structures Monitoring Program for IP2 and IP3 to perform inspection of normally submerged concrete portions of the intake structures at least once every 5 years. Inspect the baffling/grating partition and support platform of the IP3 intake structure at least once every 5 years.			
	Enhance the Structures Monitoring Program for IP2 and IP3 to perform inspection of the degraded areas of the water control structure once per 3 years rather than the normal frequency of once per 5 years during the PEO.			Audit Item 358

#	COMMITMENT	IMPLEMENTATION SCHEDULE	SOURCE	RELATED LRA SECTION / AUDIT ITEM
	Enhance the Structures Monitoring Program to include more detailed quantitative acceptance criteria for inspections of concrete structures in accordance with ACI 349.3R, "Evaluation of Existing Nuclear Safety-Related Concrete Structures" prior to the period of extended operation ~~(PEO)~~.		NL-11-032 NL-11-101	
26	Implement the Thermal Aging Embrittlement of Cast Austenitic Stainless Steel (CASS) Program for IP2 and IP3 as described in LRA Section B.1.37. This new program will be implemented consistent with the corresponding program described in NUREG-1801, Section XI.M12, Thermal Aging Embrittlement of Cast Austenitic Stainless Steel (CASS) Program.	IP2: September 28, 2013 IP3: December 12, 2015	NL-07-039 NL-07-153	A.2.1.36 A.3.1.36 B.1.37 Audit item 173
27	Implement the Thermal Aging and Neutron Irradiation Embrittlement of Cast Austenitic Stainless Steel (CASS) Program for IP2 and IP3 as described in LRA Section B.1.38. This new program will be implemented consistent with the corresponding program described in NUREG-1801 Section XI.M13, Thermal Aging and Neutron Embrittlement of Cast Austenitic Stainless Steel (CASS) Program.	IP2: September 28, 2013 IP3: December 12, 2015	NL-07-039 NL-07-153	A.2.1.37 A.3.1.37 B.1.38 Audit item 173
28	Enhance the Water Chemistry Control – Closed Cooling Water Program to maintain water chemistry of the IP2 SBO/Appendix R diesel generator cooling system per EPRI guidelines. Enhance the Water Chemistry Control – Closed Cooling Water Program to maintain the IP2 and IP3 security generator and fire protection diesel cooling water pH and glycol within limits specified by EPRI guidelines.	IP2: September 28, 2013 IP3: December 12, 2015	NL-07-039 NL-08-057	A.2.1.39 A.3.1.39 B.1.40 Audit item 509
29	Enhance the Water Chemistry Control – Primary and Secondary Program for IP2 to test sulfates monthly in the RWST with a limit of <150 ppb.	IP2: September 28, 2013	NL-07-039	A.2.1.40 B.1.41
30	For aging management of the reactor vessel internals, IPEC will (1) participate in the industry programs for investigating and managing aging effects on reactor internals; (2) evaluate and implement the results of the industry programs as applicable to the reactor internals; and (3) upon completion of these programs, but not less than 24 months before entering the period of extended operation, submit an inspection plan for reactor internals to the NRC for review and approval.	IP2: September 28, 2011 IP3: December 12, 2013	NL-07-039	A.2.1.41 A.3.1.41

#	COMMITMENT	IMPLEMENTATION SCHEDULE	SOURCE	RELATED LRA SECTION / AUDIT ITEM
31	Additional P-T curves will be submitted as required per 10 CFR 50, Appendix G prior to the period of extended operation as part of the Reactor Vessel Surveillance Program.	IP2: September 28, 2013 IP3: December 12, 2015	NL-07-039	A.2.2.1.2 A.3.2.1.2 4.2.3
32	As required by 10 CFR 50.61(b)(4), IP3 will submit a plant-specific safety analysis for plate B2803-3 to the NRC three years prior to reaching the RT_{PTS} screening criterion. Alternatively, the site may choose to implement the revised PTS rule when approved.	IP3: December 12, 2015	NL-07-039 NL-08-127	A.3.2.1.4 4.2.5
33	At least 2 years prior to entering the period of extended operation, for the locations identified in LRA Table 4.3-13 (IP2) and LRA Table 4.3-14 (IP3), under the Fatigue Monitoring Program, IP2 and IP3 will implement one or more of the following: (1) Consistent with the Fatigue Monitoring Program, Detection of Aging Effects, update the fatigue usage calculations using refined fatigue analyses to determine valid CUFs less than 1.0 when accounting for the effects of reactor water environment. This includes applying the appropriate Fen factors to valid CUFs determined in accordance with one of the following: 1. For locations in LRA Table 4.3-13 (IP2) and LRA Table 4.3-14 (IP3), with existing fatigue analysis valid for the period of extended operation, use the existing CUF. 2. Additional plant-specific locations with a valid CUF may be evaluated. In particular, the pressurizer lower shell will be reviewed to ensure the surge nozzle remains the limiting component. 3. Representative CUF values from other plants, adjusted to or enveloping the IPEC plant specific external loads may be used if demonstrated applicable to IPEC. 4. An analysis using an NRC-approved version of the ASME code or NRC-approved alternative (e.g., NRC-approved code case) may be performed to determine a valid CUF. (2) Consistent with the Fatigue Monitoring Program, Corrective Actions, repair or replace the affected locations before exceeding a CUF of 1.0.	IP2: September 28, 2011 IP3: December 12, 2013 Complete	NL-07-039 NL-07-153 NL-08-021 NL-10-082	A.2.2.2.3 A.3.2.2.3 4.3.3 Audit item 146

#	COMMITMENT	IMPLEMENTATION SCHEDULE	SOURCE	RELATED LRA SECTION / AUDIT ITEM
34	IP2 SBO / Appendix R diesel generator will be installed and operational by April 30, 2008. This committed change to the facility meets the requirements of 10 CFR 50.59~~l~~(c)(1) and, therefore, a license amendment pursuant to 10 CFR 50.90 is not required.	April 30, 2008 Complete	NL-07-078 NL-08-074 NL-11-101	2.1.1.3.5
35	Perform a one-time inspection of representative sample area of IP2 containment liner affected by the 1973 event behind the insulation, prior to entering the period of extended ~~period of~~ operation, to assure liner degradation is not occurring in this area. Perform a one-time inspection of representative sample area of the IP3 containment steel liner at the juncture with the concrete floor slab, prior to entering the period of extended ~~period of~~ operation, to assure liner degradation is not occurring in this area. Any degradation will be evaluated for updating of the containment liner analyses as needed.	IP2: September 28, 2013 IP3: December 12, 2015	NL-08-127 NL-11-101 NL-09-018	Audit Item 27
36	Perform a one-time inspection and evaluation of a sample of potentially affected IP2 refueling cavity concrete prior to the period of extended operation. The sample will be obtained by core boring the refueling cavity wall in an area that is susceptible to exposure to borated water leakage. The inspection will include an assessment of embedded reinforcing steel. Additional core bore samples will be taken, if the leakage is not stopped, prior to the end of the first ten years of the period of extended operation. A sample of leakage fluid will be analyzed to determine the composition of the fluid. If additional core samples are taken prior to the end of the first ten years of the period of extended operation, a sample of leakage fluid will be analyzed.	IP2: September 28, 2013	NL-08-127 NL-11-101 NL-09-056 NL-09-079	Audit Item 359
37	Enhance the Containment Inservice Inspection (CII-IWL) Program to include inspections of the containment using enhanced characterization of degradation (i.e., quantifying the dimensions of noted indications through the use of optical aids) during the period of extended operation. The enhancement includes obtaining critical dimensional data of degradation where possible through direct measurement or the use of scaling technologies for photographs, and the use of consistent vantage points for visual inspections.	IP2: September 28, 2013 IP3: December 12, 2015	NL-08-127	Audit Item 361

#	COMMITMENT	IMPLEMENTATION SCHEDULE	SOURCE	RELATED LRA SECTION / AUDIT ITEM
38	For Reactor Vessel Fluence, should future core loading patterns invalidate the basis for the projected values of RTpts or C_VUSE, updated calculations will be provided to the NRC.	IP2: September 28, 2013 IP3: December 12, 2015	NL-08-143	4.2.1
39	Deleted		NL-09-079	
40	Evaluate plant specific and appropriate industry operating experience and incorporate lessons learned in establishing appropriate monitoring and inspection frequencies to assess aging effects for the new aging management programs. Documentation of the operating experience evaluated for each new program will be available on site for NRC review prior to the period of extended operation.	IP2: September 28, 2013 IP3: December 12, 2015	NL-09-106	B.1.6 B.1.22 B.1.23 B.1.24 B.1.25 B.1.27 B.1.28 B.1.33 B.1.37 B.1.38
41	IPEC will ~~perform an inspection of~~ inspect steam generators for both units to assess the condition of the divider plate assembly. The examination technique used will be capable of detecting PWSCC in the steam generator divider plate assembly ~~assemblies~~. The IP2 steam generator divider plate inspections will be completed within the first ten years of the period of extended operation (PEO). The IP3 steam generator divider plate inspections will be completed within the first refueling outage following the beginning of the PEO.	IP2: After the beginning of the PEO and prior to September 28, 2023 IP3: Prior to the end of the first refueling outage following the beginning of the PEO.	NL-11-032 NL-11-074 NL-11-090 NL-11-101	N/A

#	COMMITMENT	IMPLEMENTATION SCHEDULE	SOURCE	RELATED LRA SECTION / AUDIT ITEM
42	IPEC will develop a plan for each unit to address the potential for cracking of the primary to secondary pressure boundary due to PWSCC of tube-to-tubesheet welds using one of the following two options. Option 1 (Analysis) IPEC will perform an analytical evaluation of the steam generator tube-to-tubesheet welds in order to establish a technical basis for either determining that the tubesheet cladding and welds are not susceptible to PWSCC, or redefining the pressure boundary in which the tube-to-tubesheet weld is no longer included and, therefore, is not required for reactor coolant pressure boundary function. The redefinition of the reactor coolant pressure boundary must be approved by the NRC as a license amendment request. Option 2 (Inspection) IPEC will perform a one-time inspection of a representative number of tube-to-tubesheet welds in each steam generator to determine if PWSCC cracking is present. If weld cracking is identified: a. The condition will be resolved through repair or engineering evaluation to justify continued service, as appropriate, and b. An ongoing monitoring program will be established to perform routine tube-to-tubesheet weld inspections for the remaining life of the steam generators.	IP2: Prior to March 2024 IP3: Prior to the end of the first refueling outage following the beginning of the PEO. IP2: Between March 2020 and March 2024 IP3: Prior to the end of the first refueling outage following the beginning of the PEO.	NL-11-032 NL-11-074 NL-11-090 NL-11-096	N/A
43	IPEC will review design basis ASME Code Class 1 fatigue evaluations to determine whether the NUREG/CR-6260 locations that have been evaluated for the effects of the reactor coolant environment on fatigue usage are the limiting locations for the IP2 and IP3 configurations. If more limiting locations are identified, the most limiting location will be evaluated for the effects of the reactor coolant environment on fatigue usage. IPEC will use the NUREG/CR-6909 methodology in the evaluation of the limiting locations consisting of nickel alloy, if any.	IP2: Prior to September 28, 2013 IP3: Prior to December 12, 2015	NL-11-032 NL-11-101	4.3.3

#	COMMITMENT	IMPLEMENTATION SCHEDULE	SOURCE	RELATED LRA SECTION / AUDIT ITEM
44	IPEC will include written explanation and justification of any user intervention in future evaluations using the WESTEMS "Design CUF" module.	~~Within 60 days of issuance of the renewed operating license.~~ IP2: Prior to September 28, 2013 IP3: Prior to December 12, 2015	NL-11-032 NL-11-101	N/A
45	IPEC will not use the NB-3600 option of the WESTEMS program in future design calculations until the issues identified during the NRC review of the program ~~has~~ have been resolved.	~~Within 60 days of issuance of the renewed operating license.~~ IP2: Prior to September 28, 2013 IP3: Prior to December 12, 2015	NL-11-032 NL-11-101	N/A
46	Include in the IP2 ISI Program that IPEC will perform twenty-five volumetric weld metal inspections of socket welds during each 10-year ISI interval scheduled as specified by IWB-2412 of the ASME Section XI Code during the period of extended operation. In lieu of volumetric examinations, destructive examinations may be performed, where one destructive examination may be substituted for two volumetric examinations.	IP2: Prior to September 28, 2013	NL-11-032 NL-11-074	N/A

ATTACHMENT 3 TO NL-11-101

AMENDMENT 9 TO THE LICENSE RENEWAL APPLICATION (LRA)

REACTOR VESSEL INSPECTION PROGRAM ERRATA

ENTERGY NUCLEAR OPERATIONS, INC.
INDIAN POINT NUCLEAR GENERATING UNIT NOS. 2 & 3
DOCKET NOS. 50-247 AND 50-286

INDIAN POINT NUCLEAR GENERATING UNIT NOS. 2 AND 3
AMMENMENT 9 TO LICENSE RENEWAL APPLICATION (LRA)
REACTOR VESSEL INSPECTION PROGRAM ERRATA

The LRA is revised as described below. (underline – added, strikethrough – deleted)

NL-10-063 submitted Amendment 9 to the LRA – Reactor Vessel Internals Program, however, the update to Section 3.1.2.2.12 was inadvertently not included. The update is provided below.

3.1.2.2.12 Cracking due to Stress Corrosion Cracking and Irradiation-Assisted Stress Corrosion Cracking (IASCC)

Cracking due to SCC and IASCC ~~could occur~~ in PWR stainless steel reactor internals exposed to reactor coolant will be managed by the Water Chemistry Control – Primary and Secondary and Reactor Vessel Internals (RVI) Programs. The RVI Program will implement the EPRI Pressurized Water Reactor Internals Inspection and Evaluation Guidelines, MRP- 227. The RVI Program will use nondestructive examinations (NDE) and other inspection methods to manage aging effects for reactor vessel internals. ~~To manage cracking in vessel internals components, IPEC maintains the Water Chemistry Control – Primary and Secondary Program and will (1) participate in the industry programs for investigating and managing aging effects on reactor internals; (2) evaluate and implement the results of the industry programs as applicable to the reactor internals; and (3) upon completion of these programs, but not less than 24 months before entering the period of extended operation, submit an inspection plan for reactor internals to the NRC for review and approval. The IPEC commitment to these RVI programs is included in UFSAR Supplement, Appendix A, Sections A.2.1.41 and A.3.1.41.~~

Entergy New Contention NYS-38/RK-TC-5
Attachment 12

Entergy

Entergy Nuclear Northeast
Indian Point Energy Center
450 Broadway, GSB
P.O. Box 249
Buchanan, N.Y. 10511-0249
Tel (914) 788-2055

Fred Dacimo
Vice President
Operations License Renewal

NL-11-107

September 28, 2011

ATTN: Document Control Desk
U.S. Nuclear Regulatory Commission
Washington, DC 20555-0001

SUBJECT: License Renewal Application – Completion of Commitment #30 Regarding the Reactor Vessel Internals inspection Plan
Indian Point Nuclear Generating Unit Nos. 2 and 3
Docket Nos. 50-247 and 50-286
License Nos. DPR-26 and DPR-64

REFERENCE:
1. Entergy Letter dated April 23, 2007, Fred Dacimo to Document Control Desk, "License Renewal Application" (NL-07-039)
2. Entergy Letter dated July 14, 2010, Fred Dacimo to Document Control Desk, "Amendment 9 to License Renewal Application (LAR) – Reactor Vessel Internals Program" (NL-10-063)
3. EPRI, Materials Reliability Program (MRP), Pressurized Water Reactor Internals Inspection and Evaluation Guidelines (MRP-227)
4. NRC, "Final safety Evaluation of EPRI Report, Materials Reliability Program Report 1016596, Revision 0, Pressurized Water reactor (PWR) Internals Inspection and Evaluation Guidelines" dated June 22, 2011

Dear Sir or Madam:

Entergy Nuclear Operations, Inc. applied for renewal of the Indian Point Nuclear Generating Unit Nos. 2 and 3 operating licenses by the reference 1 letter which included a list of regulatory commitments. The commitment list contained commitment # 30 for submitting an inspection plan for reactor vessel internals. Reference 2 provided the Indian Point Nuclear Generating Unit Nos. 2 and 3 Reactor Vessel Internals Program. This letter contains the inspection plan satisfying the completion of commitment # 30 to the License Renewal Application regarding the Aging Management Programs for Reactor Vessel Internals. The Indian Point Energy Center (IPEC) Reactor Vessel Internals Inspection Plan was developed in accordance with the results of industry programs applicable to the reactor vessel internals and addresses the action items and conditions stated in the NRC Final Safety Evaluation of MRP-227 (Reference 4).

A128
NRR

There are no new commitments identified in this submittal. If you have any questions, or require additional information, please contact Mr. Robert Walpole at 914-734-6710.

Sincerely,

FD/cbr

Attachment: Indian Point Energy Center Reactor Vessel Internals Inspection Plan

cc: Mr. William Dean, Regional Administrator, NRC Region I
Mr. J. Boska, Senior Project Manager, NRC, NRR, DORL
Mr. David Wrona, NRC Branch Chief, Engineering Review Branch I
Mr. Sherwin E. Turk, NRC Office of General Counsel, Special Counsel
NRC Resident Inspectors Office, Indian Point
Mr. Paul Eddy, NYS Dept. of Public Service
Mr. Francis J. Murray, Jr., President and CEO, NYSERDA

ATTACHMENT TO NL-11-107

Indian Point Energy Center Reactor Vessel Internals Inspection Plan

ENTERGY NUCLEAR OPERATIONS, INC
INDIAN POINT NUCLEAR GENERATING UNITS 2 AND 3
DOCKET NOS. 50-247 & 50-286

1 INTRODUCTION

1.1 Aging Management Program Inspection Plan

The EPRI MRP guidelines define a supplemental inspection program for managing aging effects on the reactor vessel internals and were used to develop this inspection plan for IPEC Units 2 and 3. The EPRI MRP Reactor Internals Focus Group developed the MRP-227 Guidelines to support the demonstration of continued functionality, with requirements for inspections to detect the effects of aging along with requirements for the evaluation of detected aging effects, if any. The development of MRP-227 combined the results of component functionality assessments with component accessibility, operating experience, existing evaluations and prior examination results to determine the appropriate aging management methods, initial examination timing and the need and timing of subsequent inspections and identified the components and locations for supplemental examination.

In accordance with MRP-227, this inspection plan includes:

- Identification of items for inspection,
- Specification of the type of examination appropriate for each degradation mechanism,
- Specification of the required level of examination qualification,
- Schedule of initial inspection and frequency of subsequent inspections,
- Criteria for sampling and coverage,
- Criteria for expansion of scope if unanticipated indications are found,
- Inspection acceptance criteria,
- Methods for evaluating examination results not meeting the acceptance criteria,
- Updating the program based on industry-wide results, and
- Contingency measures to repair, replace or mitigate.

2
BACKGROUND OF IPEC REACTOR VESSEL INTERNALS DESIGN

This section provides a summary of the design characteristics for the IPEC Westinghouse PWR internals.

2.1 Westinghouse Internals Design Characteristics

A schematic view of a typical set of Westinghouse-designed PWR internals is Figure 2-1. More detailed views of selected internals components are Figures 2-2 through 2-16 at the end of this section. These figures are typical and are not an exact representation of the IPEC internals.

To help in the categorization of IPEC internals design characteristics as discussed in MRP-227 Section 3.1.3, the following information is provided. IPEC Units 2 and 3 are Westinghouse four loop plants with a downflow baffle-barrel region flow design, and a top hat design upper support plate. Unit 2 had an original thermal output of 2758 MWth and Unit 3 had an original thermal output of 3025 MWth.

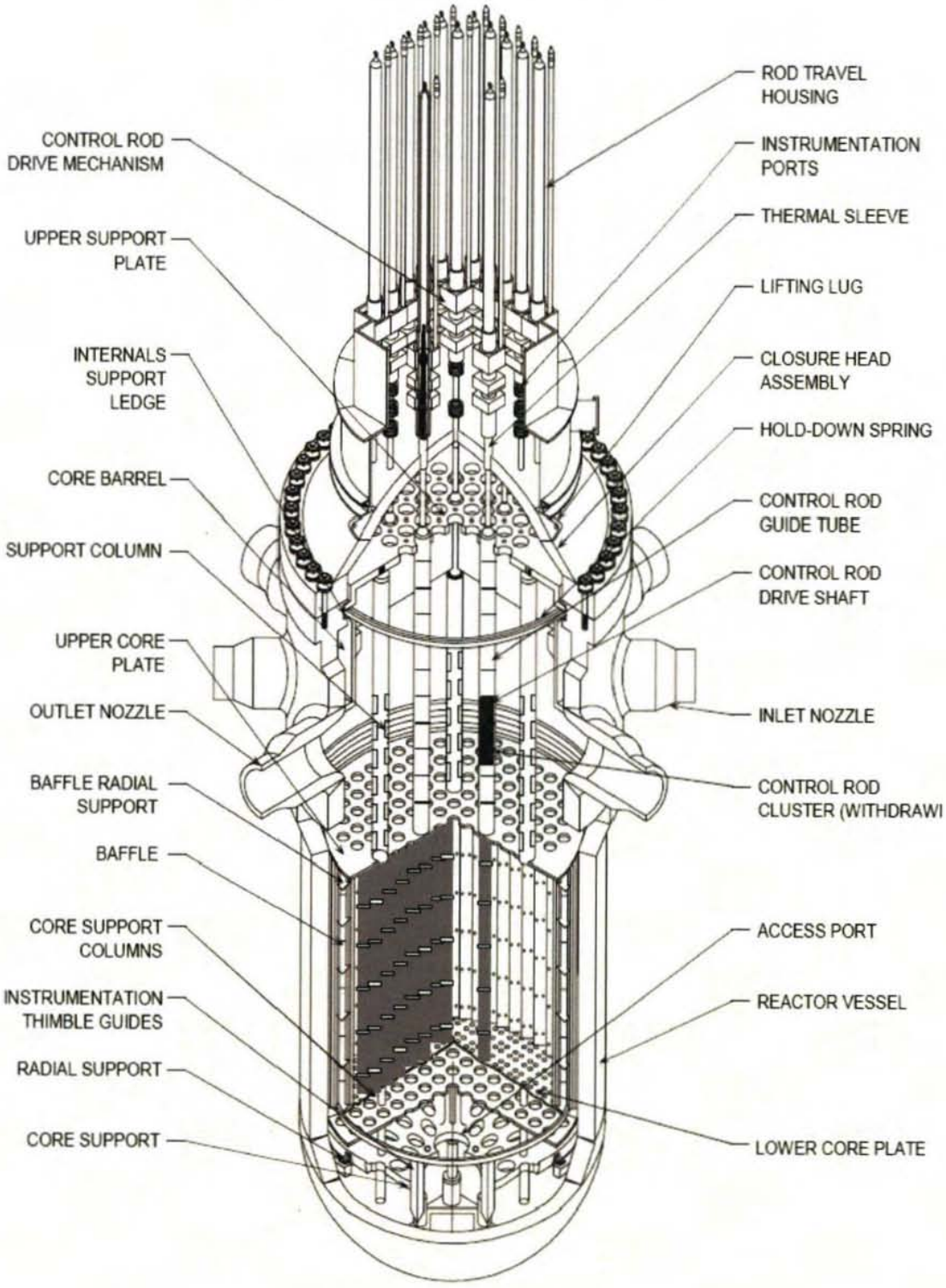

Figure 2-1
Overview of typical Westinghouse internals

Westinghouse internals consist of two basic assemblies: an upper internals assembly that is removed during each refueling operation to obtain access to the reactor core and a lower internals assembly that can be removed following a complete core off-load.

The reactor core is positioned and supported by the upper internals and lower internals assemblies. The individual fuel assemblies are positioned by fuel alignment pins in the upper core plate and the lower core plate. These pins control the orientation of the core with respect to the upper and lower internals assemblies. The lower internals are aligned with the upper internals by the upper core plate alignment pins and secondarily by the head/vessel alignment pins. The lower internals are aligned to the vessel by the lower radial support/clevis assemblies and by the head/vessel alignment pins. Thus, the core is aligned with the vessel by a number of interfacing components.

The lower internals assembly is supported in the vessel by clamping to a ledge below the vessel-head mating surface and is closely guided at the bottom by radial support/clevis assemblies. The upper internals assembly is clamped at this same ledge by the reactor vessel head. The bottom of the upper internals assembly is closely guided by the core barrel alignment pins of the lower internals assembly.

Upper Internals Assembly

The major sub-assemblies that constitute the upper internals assembly are the: (1) upper core plate (UCP); (2) upper support column assemblies; (3) control rod guide tube assemblies; and (4) upper support plate (USP).

During reactor operation, the upper internals assembly is preloaded against the fuel assembly springs and the internals hold down spring by the reactor vessel head pressing down on the outside edge of the USP. The USP acts as the divider between the upper plenum and the reactor vessel head and as a relatively stiff base for the rest of the upper internals. The upper support columns and the control rod guide tubes are attached to the USP. The UCP, in turn, is attached to the upper support columns. The USP design at IPEC is designated as a top hat design.

The UCP is perforated to permit coolant to pass from the core below into the upper plenum between the USP and the UCP. The coolant then exits through the outlet nozzles in the core barrel. The UCP positions and laterally supports the core by fuel alignment pins extending below the plate. The UCP contacts and preloads the fuel assembly springs and thus maintains contact of the fuel assemblies with the lower core plate (LCP) during reactor operation.

The upper support columns vertically position the UCP and are designed to take the uplifting hydraulic flow loads and fuel spring loads on the UCP. The control rod guide tubes are bolted to the USP and pinned at the UCP so they can be easily removed if replacement is desired. The control rod guide tubes are designed to guide the control rods in and out of the fuel assemblies to control power generation. Guide tube cards are located within each control rod guide tube

to guide the absorber rods. The control rod guide tubes are also slotted in their lower sections to allow coolant exiting the core to flow into the upper plenum.

The upper instrumentation columns are bolted to the USP. These columns support the thermocouple guide tubes that lead the thermocouples from the reactor head through the upper plenum to just above the UCP.

The UCP alignment pins locate the UCP laterally with respect to the lower internals assembly. The pins must laterally support the UCP so that the plate is free to expand radially and move axially during differential thermal expansion between the upper internals and the core barrel. The UCP alignment pins are the interfacing components between the UCP and the core barrel.

Lower Internals Assembly

The fuel assemblies are supported inside the lower internals assembly on top of the LCP. The functions of the LCP are to position and support the core and provide a metered control of reactor coolant flow into each fuel assembly. The LCP is elevated above the lower support casting by support columns and bolted to a ring support attached to the inside diameter of the core barrel. The support columns transmit vertical fuel assembly loads from the LCP to the much thicker lower support casting. The function of the lower support casting is to provide support for the core. The lower support casting is welded to and supported by the core barrel, which transmits vertical loads to the vessel through the core barrel flange.

The primary function of the core barrel is to support the core. A large number of components are attached to the core barrel, including the baffle/former assembly, the core barrel outlet nozzles, the thermal shields, the alignment pins that engage the UCP, the lower support casting, and the LCP. The lower radial support/clevis assemblies restrain large transverse motions of the core barrel but at the same time allow unrestricted radial and axial thermal expansion.

The baffle and former assembly consists of vertical plates called baffles and horizontal support plates called formers. The baffle plates are bolted to the formers by the baffle/former bolts, and the formers are attached to the core barrel inside diameter by the barrel/former bolts. Baffle plates are secured to each other at selected corners by edge bolts. In addition, at IPEC, corner brackets are installed behind and bolted to the baffle plates. The baffle/former assembly forms the interface between the core and the core barrel. The baffles provide a barrier between the core and the former region so that a high concentration of flow in the core region can be maintained. A secondary benefit is to reduce the neutron flux on the vessel.

The function of the core barrel outlet nozzles is to direct the reactor coolant, after it leaves the core, radially outward through the reactor vessel outlet nozzles. The core barrel outlet nozzles are located in the upper portion of the core barrel directly below the flange and are attached to the core barrel, each in line with a vessel outlet nozzle.

Additional neutron shielding of the reactor vessel is provided in the active core region by thermal shields attached to the outside of the core barrel.

A flux thimble is a long, slender stainless steel tube that passes from an external seal table, through a bottom mounted nozzle penetration, through the lower internals assembly, and finally extends to the top of a fuel assembly. The flux thimble provides a path for a neutron flux detector into the core and is subjected to reactor coolant pressure and temperature on the outside surface and to atmospheric conditions on the inside. The flux thimble path from the seal table to the bottom mounted nozzles is defined by flux thimble guide tubes, which are part of the primary pressure boundary and not part of the internals. The bottom-mounted instrumentation (BMI) columns provide a path for the flux thimbles from the bottom of the vessel into the core. The BMI columns align the flux thimble paths with instrumentation thimbles in the fuel assembly.

In the upper internals assembly, the upper support plate, the upper support columns, and the upper core plate are considered core support structures. In the lower internals assembly, the lower core plate, the lower support casting, the lower support columns, the core barrel including the core barrel flange, the radial support/clevis assemblies, the baffle plates, and the former plates are classified as core support structures.

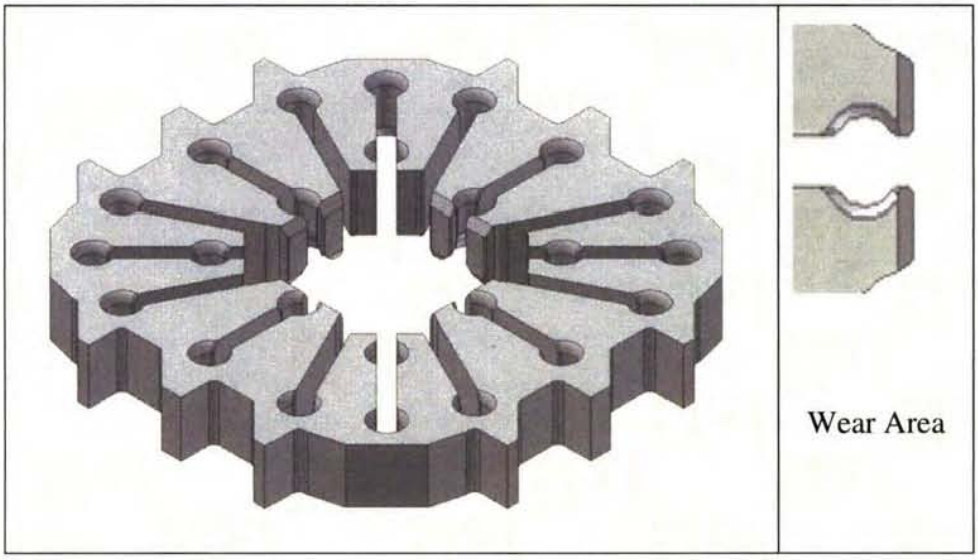

Figure 2-2
Typical Westinghouse control rod guide card (17x17 fuel assembly)

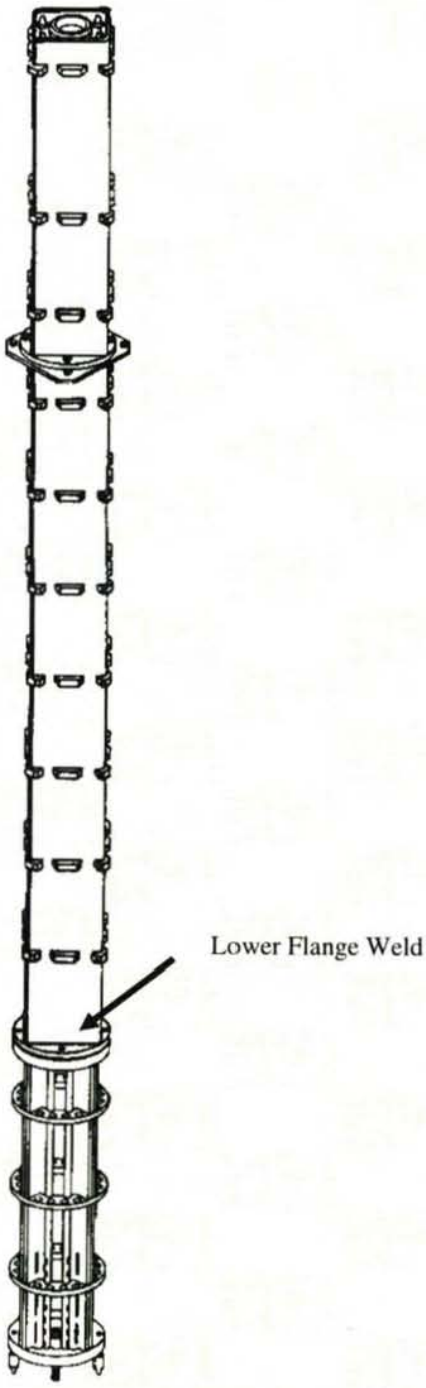

Figure 2-3
Typical Westinghouse control rod guide tube assembly

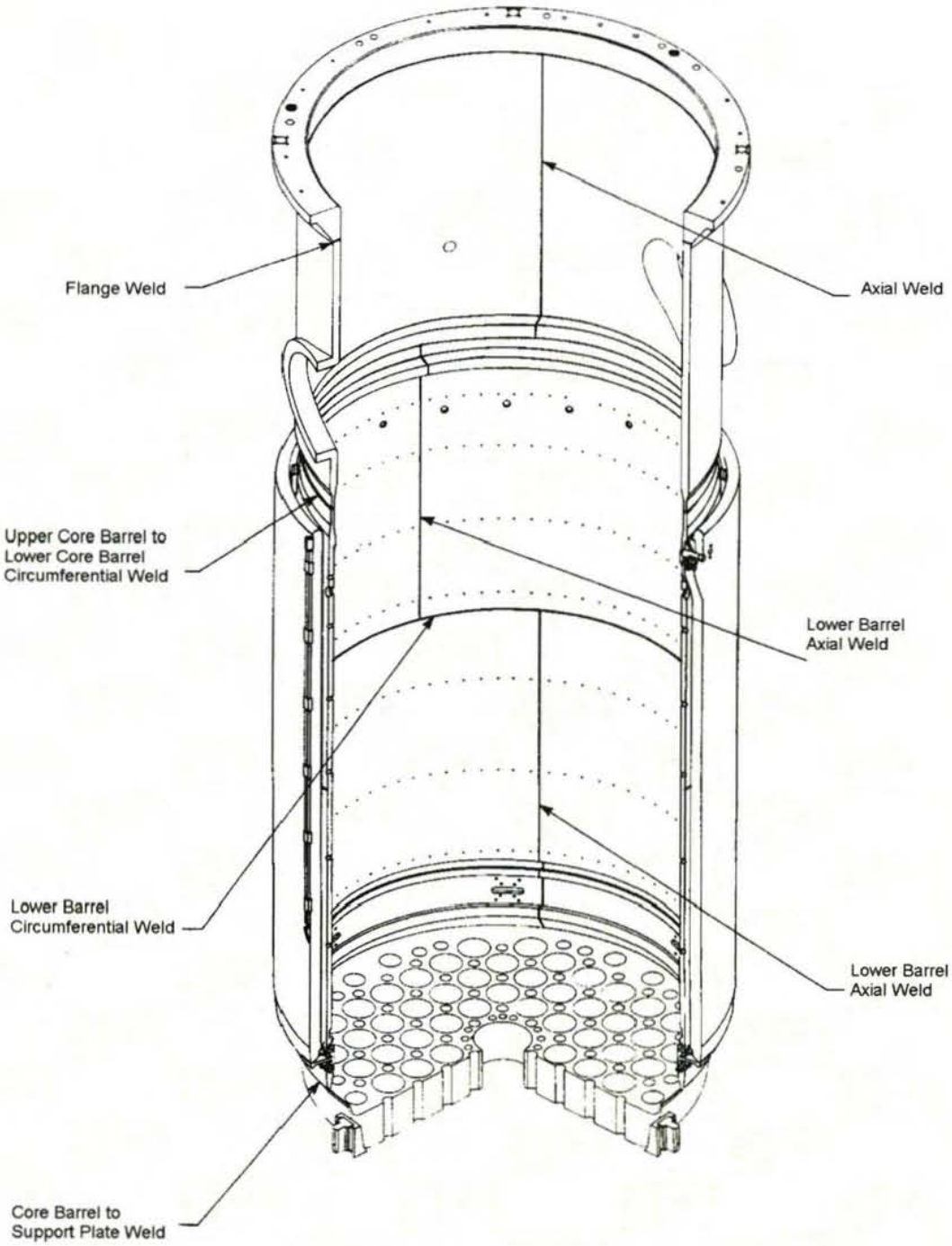

Figure 2-4
Major fabrication welds in typical Westinghouse core barrel

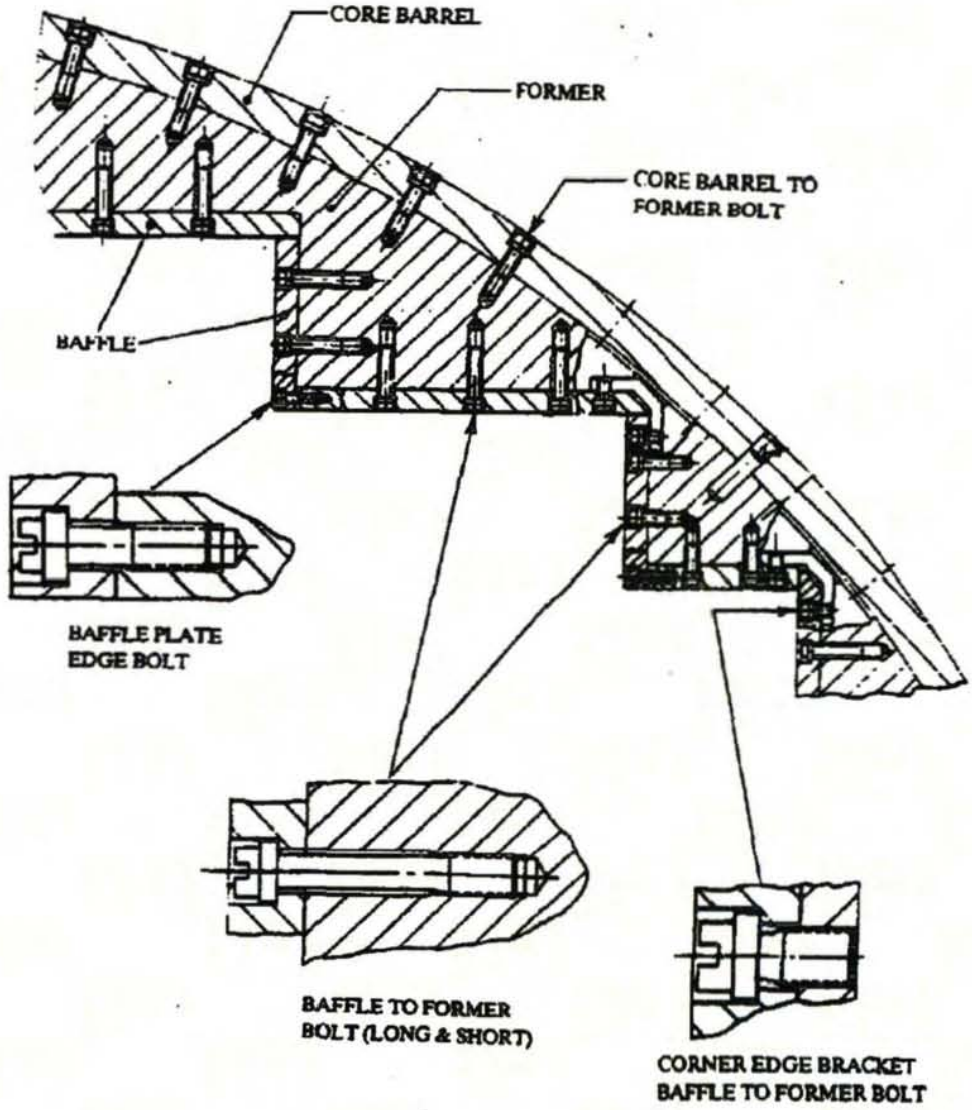

Figure 2-5
Bolt locations in typical Westinghouse baffle-former-barrel structure.

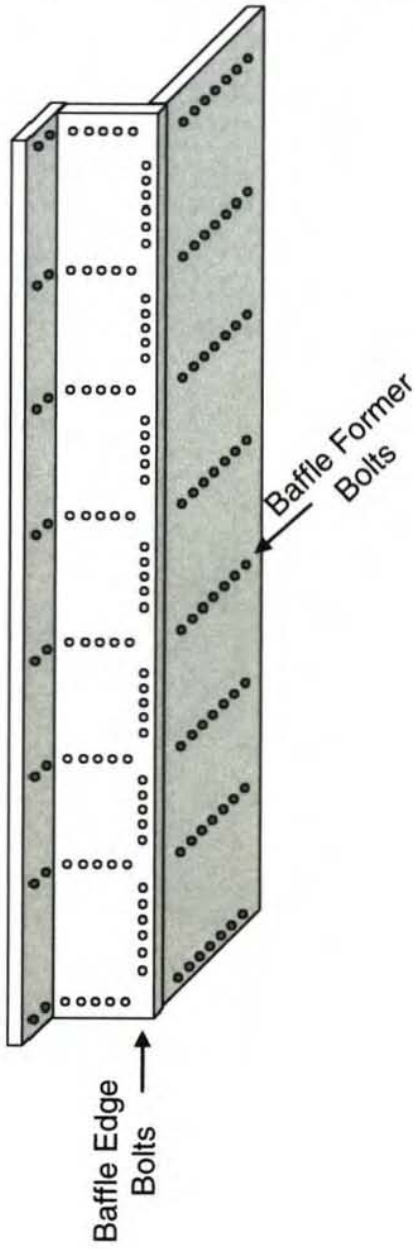

Figure 2-6
Baffle-edge bolt and baffle-former bolt locations at high fluence seams in bolted baffle-former assembly

Figure 2-7
High fluence seam locations in Westinghouse baffle-former assembly

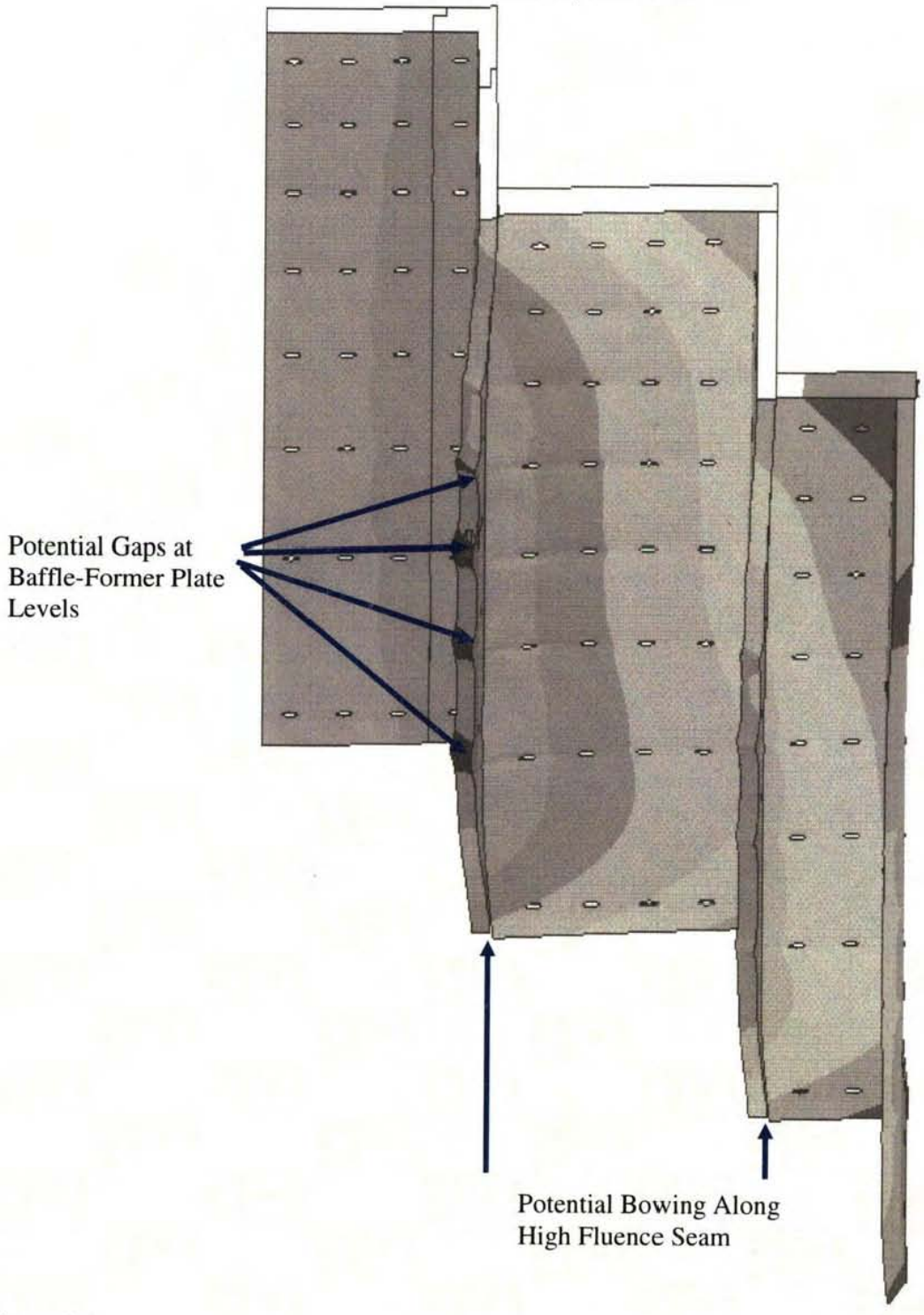

Figure 2-8
Exaggerated view of void swelling induced distortion in Westinghouse baffle-former assembly.

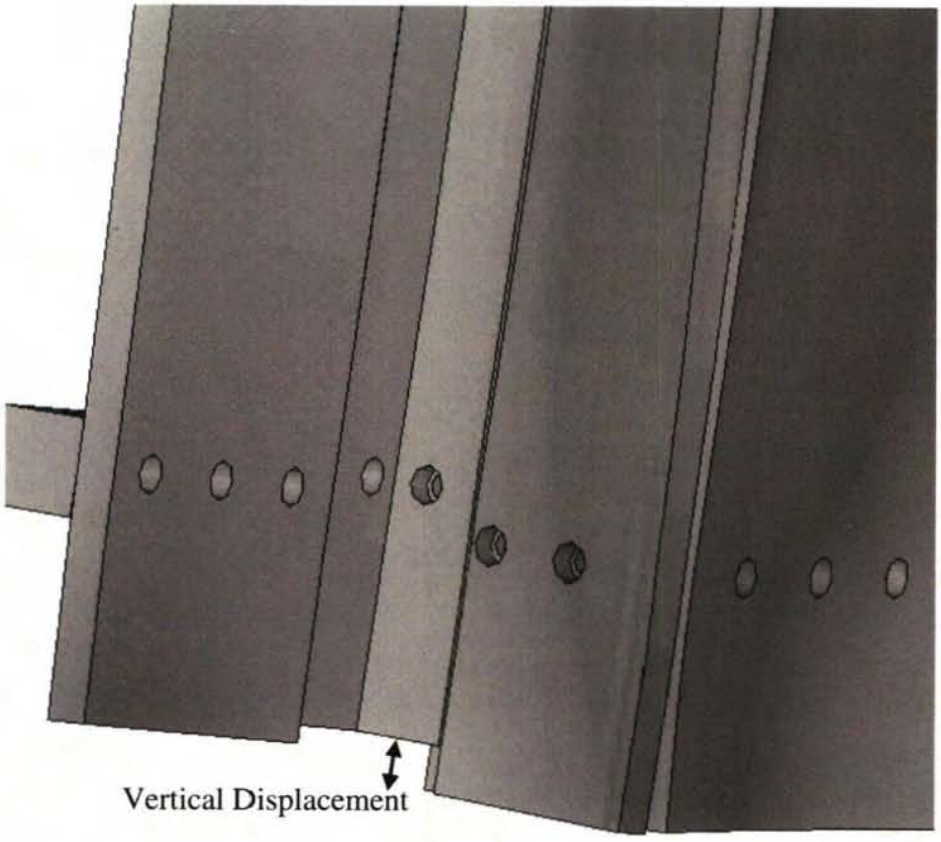

Figure 2-9
Vertical displacement of Westinghouse baffle plates caused by void swelling.

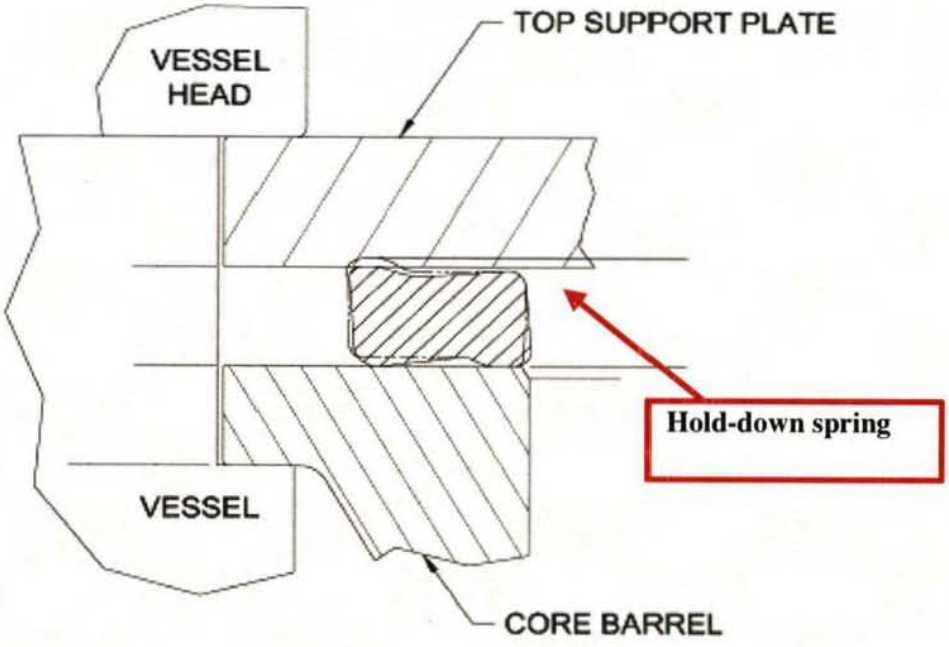

Figure 2-10
Schematic cross-sections of the Westinghouse hold-down springs

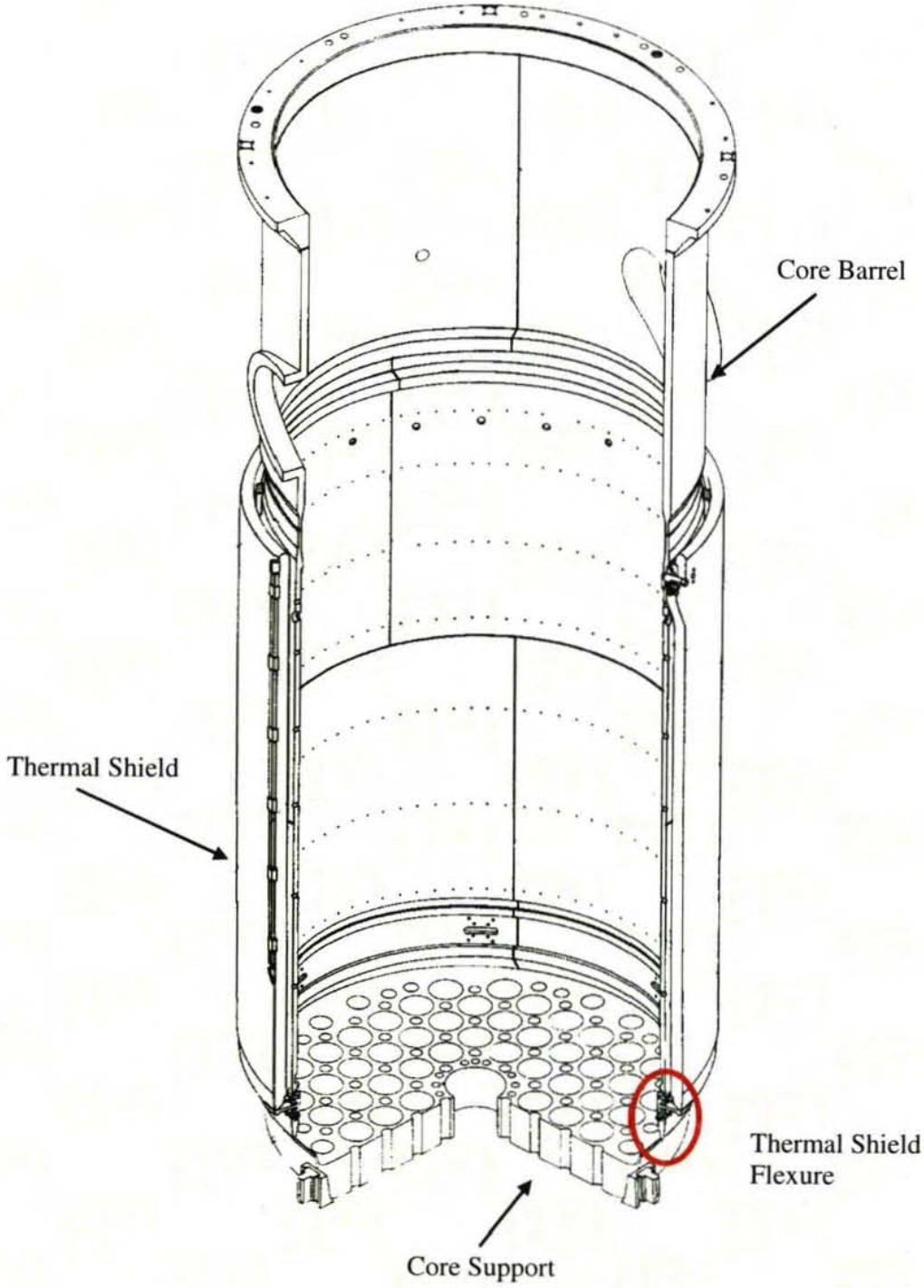

Figure 2-11
Location of Westinghouse thermal shield flexures

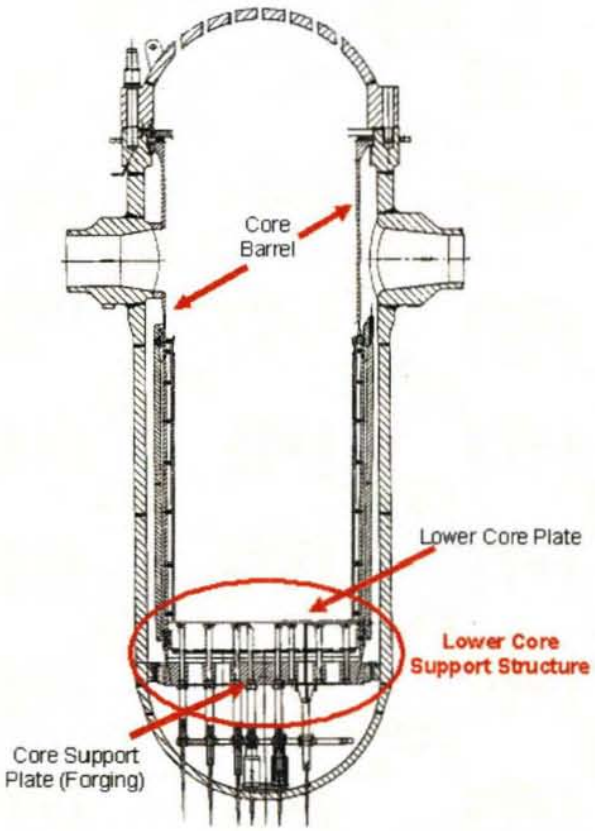

Figure 2-12
Schematic indicating location of Westinghouse lower core support structure. Additional details shown in Figure 2-13

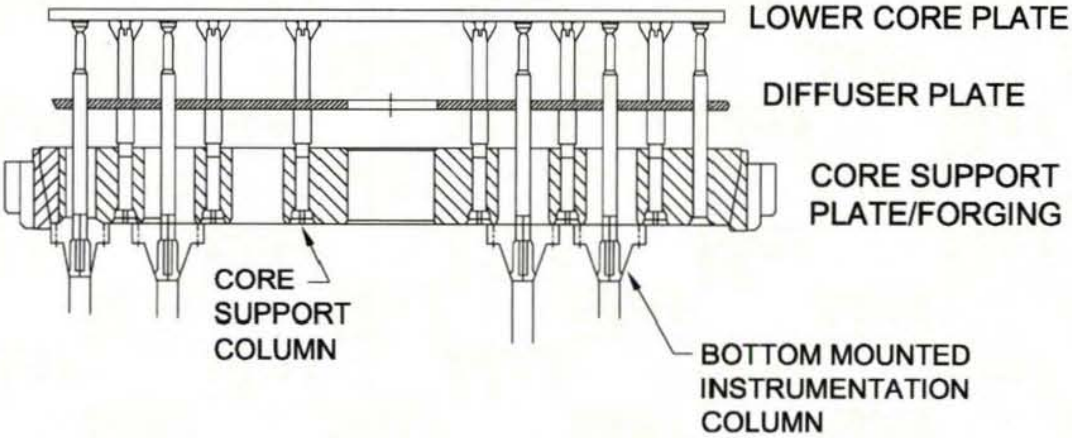

Figure 2-13
Westinghouse lower core support structure and bottom mounted instrumentation columns. Core support column bolts fasten the core support columns to the lower core plate

Figure 2-14
Typical Westinghouse core support column. Core support column bolts fasten the top of the support column to the lower core plate

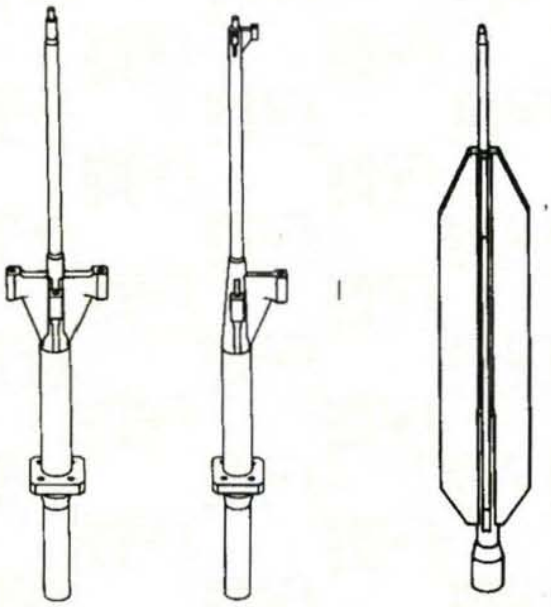

Figure 2-15
Examples of Westinghouse bottom mounted instrumentation column designs

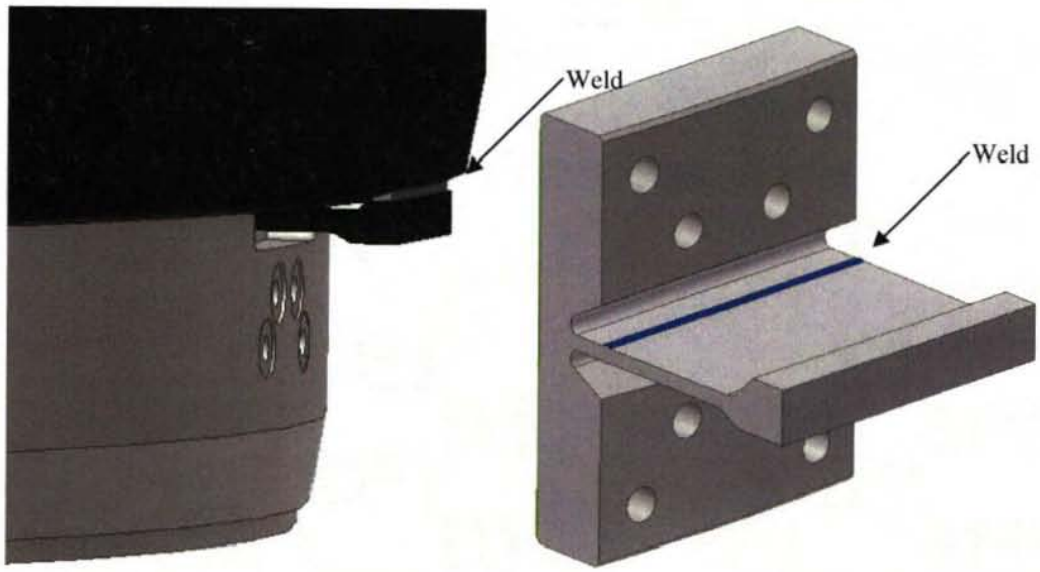

Figure 2-16
Typical Westinghouse thermal shield flexure

3
INSPECTION PLAN SUMMARY

Management of component aging effects includes actions to prevent or control aging effects, review of operating experience to better understand the potential for aging effects to occur, inspections to detect the onset of aging effects in susceptible components, protocols for evaluation and remediation of the effects of aging, and procedures to ensure component aging effects are managed in a coordinated program.

3.1 Component Inspection and Evaluation Overview

This discussion summarizes the guidance of the MRP Inspection & Evaluation (I&E) guidelines necessary to understand implementation but does not duplicate the full discussion of the technical bases. MRP-227 and its supporting documents provide further information on the technical bases of the program.

MRP-227 establishes four groups of reactor internals components with respect to inspections: Primary, Expansion, Existing Programs and No Additional Measures, as summarized below.

- **Primary:** Those PWR internals that are highly susceptible to the effects of at least one of the eight aging mechanisms were placed in the Primary group. The aging management requirements that are needed to ensure functionality of Primary components are described in the I&E guidelines. The Primary group also includes components which have shown a degree of tolerance to a specific aging degradation effect, but for which no highly susceptible component exists or for which no highly susceptible component is accessible.
- **Expansion:** Those PWR internals that are highly or moderately susceptible to the effects of at least one of the eight aging mechanisms, but for which a functionality assessment has shown a degree of tolerance to those effects, were placed in the Expansion group. The schedule for implementation of aging management requirements for Expansion components will depend on the findings from the examinations of the Primary components.
- **Existing Programs:** Those PWR internals that are susceptible to the effects of at least one of the eight aging mechanisms and for which generic and plant-specific existing AMP elements are capable of managing those effects, were placed in the Existing Programs group.
- **No Additional Measures:** Those PWR internals for which the effects of all eight aging mechanisms are below the screening criteria were placed in the No Additional Measures group. Items categorized as Category A in MRP-191 are those for which aging effects are below the screening criteria, so that aging degradation significance is minimal. Primary, expansion, and

existing examinations verify that the chemical control program has been effective at controlling stress corrosion cracking and loss of material due to corrosion for Category A components. Additional components were placed in the No Additional Measures group as a result of Failure Modes, Effects and Criticality Analysis (FMECA) and the functionality assessment. No further action is required for managing the aging of the No Additional Measures components. However, any core support structures subject to ASME Section XI Examination Category B-N-3 requirements continue to be subject to those ASME Code requirements throughout the period of extended operation.

The inspections required for Primary and Expansion components were selected from visual, surface and volumetric examination methods that are applicable and appropriate for the expected degradation effect (e.g. cracking caused by particular mechanisms, loss of material caused by wear). The inspection methods include: Visual examinations (VT-3, VT-1, EVT-1), surface examinations, volumetric examinations (specifically UT) and physical measurements. MRP-227 provides detailed justification for the components selected for inspection and the specific examination methods selected for each. The MRP-228 report, PWR Internals Inspection Standards, provides detailed examination standards and any inspection technical justification or inspection personnel training requirements.

3.2 Inspection and Evaluation Requirements for Primary Components

The inspection requirements for Primary Components at IPEC Units 2 and 3 from MRP-227 are provided in Table 5-2.

3.3 Inspection and Evaluation Requirements for Expansion Components

The inspection requirements for Expansion Components at IPEC Units 2 and 3 from MRP-227 are provided in Table 5-3.

3.4 Inspections of Existing Program Components

The list of Existing Program Components at IPEC Units 2 and 3 from MRP-227 are provided in Table 5-4. This includes components in the Section XI ISI Program for IPEC Units 2 and 3 designated as B-N-2 and B-N-3 locations.

The Reactor Vessel Component Inspection Plan conducted as part of the ISI program for IPEC Units 2 and 3 is provided in Table 5-6. The components are inspected as part of the ISI Program. The ISI Program inspections are implemented in accordance with ASME Section XI schedule requirements.

3.5 Examination Systems

Equipment, techniques, procedures and personnel used to perform examinations required under this program will be consistent with the requirements of MRP-228. Indications detected during these examinations will be characterized and reported in accordance with the requirements of MRP-228.

3.6 Information Supplied in Response to the NRC Safety Evaluation of MRP-227

As part of the NRC Final Safety Evaluation of MRP-227, a number of action items and conditions were specified by the staff. Table 5-8 documents the IPEC response to the NRC Final Safety Evaluation of MRP-227. Wherever possible, these items have been addressed in the appropriate sections of this document. All NRC action items and conditions not addressed elsewhere in this document are discussed in this section.

SER Section 4.2.1, Applicant/Licensee Action Item 1

IPEC has assessed its plant design and operating history and has determined that MRP-227 is applicable to the facility. The assumptions regarding plant design and operating history made in MRP-191 are appropriate for IPEC and there are no differences in component inspection categories at IPEC. IPEC Unit 2 (IP2) had the first 8 years of operation with a high leakage core loading pattern. IPEC Unit 3 (IP3) had the first 10 years of operation with a high leakage core loading pattern. The FMECA and functionality analyses were based on the assumption of 30 years of operation with high leakage core loading patterns; therefore, IPEC is bounded by the assumptions in MRP-191. IPEC has always operated as a base-load plant which operates at fixed power levels and does not vary power on a calendar or load demand schedule.

SER Section 4.2.2, Applicant/Licensee Action Item 2

IPEC reviewed the information in Table 4-4 of MRP-191 and determined that this table contains all of the RVI components that are within the scope of license renewal. This is shown in Table 5-7.

SER Section 4.2.3, Applicant/Licensee Action Item 3

At IP2, the original X750 guide tube support pins (split pins) were replaced in 1995 with an improved X750 Revision B material made from more selective material with more continuous carbide coverage grain boundaries and tighter quality controls, to provide greater resistance to stress corrosion cracking. At IP3 the original X750 guide tube support pins (split pins) were replaced in 2009 (after 33 years in service) with cold-worked 316 stainless steel. The cold-worked 316 stainless steel is a significant improvement over the X750. At IPEC the effects of

aging on these components will be managed in the period of extended operation based on industry experience and plant specific evaluations.

SER Section 4.2.4, Applicant/Licensee Action Item 4

This action item does not apply to Westinghouse designed units.

SER Section 4.2.5, Applicant/Licensee Action Item 5

The IPEC plant specific acceptance criteria for hold down springs and an explanation of how the proposed acceptance criteria are consistent with the IPEC licensing basis and the need to maintain the functionality of the hold down springs under all licensing basis conditions will be developed prior to the first required physical measurement. In accordance with SER Section 4.2.5, IPEC will submit this information to the NRC as part of the submittal to apply the approved version of MRP-227.

SER Section 4.2.6, Applicant/Licensee Action Item 6

This action item does not apply to Westinghouse designed units.

SER Section 4.2.7, Applicant/Licensee Action Item 7

The IPEC plant specific analyses to demonstrate the lower support column bodies will maintain their functionality during the period of extended operation will consider the possible loss of fracture toughness in these components due to thermal and irradiation embrittlement. The analyses will be consistent with the IPEC licensing basis and the need to maintain the functionality of the lower support column bodies under all licensing basis conditions of operation. In accordance with SER Section 4.2.7, IPEC will submit this information to the NRC as part of the submittal to apply the approved version of MRP-227.

SER Section 4.2.8, Applicant/Licensee Action Item 8

This document includes an inspection plan which addresses the identified plant-specific action items contained in the NRC Final Safety Evaluation for MRP-227. IPEC is not requesting any deviations from the guidance provided in MRP-227, as approved by the NRC.

4
EXAMINATION ACCEPTANCE AND EXPANSION CRITERIA

4.1 Examination Acceptance Criteria

4.1.1 Visual (VT-3) Examination

Visual (VT-3) examination is an appropriate NDE method for the detection of general degradation conditions in many of the susceptible components. The ASME Code Section XI, Examination Category B-N-3, provides a set of relevant conditions for the visual (VT-3) examination of removable core support structures in Section IWB. These are:

1. structural distortion or displacement of parts to the extent that component function may be impaired;
2. loose, missing, cracked, or fractured parts, bolting, or fasteners;
3. corrosion or erosion that reduces the nominal section thickness by more than 5%;
4. wear of mating surfaces that may lead to loss of function; and
5. structural degradation of interior attachments such that the original cross-sectional area is reduced more than 5%.

For components in the Existing Programs group, these general relevant conditions are sufficient. However, for components where visual (VT-3) is specified in the Primary or the Expansion group, more specific descriptions of the relevant conditions are provided in Table 5-5 for the benefit of the examiners. One or more of these specific relevant condition descriptions may be applicable to the Primary and Expansion components listed in Tables 5-2 and 5-3.

The examination acceptance criteria for components requiring visual (VT-3) examination is thus the absence of any of the relevant condition(s) specified in Table 5-5.

The disposition can include a supplementary examination to further characterize the relevant condition, an engineering evaluation to show that the component is capable of continued operation with a known relevant condition, or repair/replacement to remediate the relevant condition.

4.1.2 Visual (VT-1) Examination

Visual (VT-1) examination is defined in the ASME Code Section XI as an examination "conducted to detect discontinuities and imperfections on the surface of components, including such conditions as cracks, wear, corrosion, or erosion." The acceptance criterion for any visual (VT-1) examinations is the absence of any relevant conditions defined by the ASME Code, as supplemented by more specific plant inservice inspection requirements.

4.1.3 Enhanced Visual (EVT-1) Examination

Enhanced visual (EVT-1) examination has the same requirements as the ASME Code Section XI visual (VT-1) examination, with additional requirements given in the Inspection Standard, MRP-228. These enhancements are intended to improve the detection and characterization of discontinuities taking into account the remote visual aspect of reactor internals examinations. As a result, EVT-1 examinations are capable of detecting small surface-breaking cracks and sizing surface crack length when used in conjunction with sizing aids (e.g. landmarks, ruler, and tape measure). EVT-1 examination is the appropriate NDE method for detection of cracking in plates or their welded joints. Thus the relevant condition applied for EVT-1 examination is the same as for cracking in Section XI which is crack-like surface-breaking indications.

Therefore, until such time as engineering studies provide a basis by which a quantitative amount of degradation can be shown acceptable for the specific component, any observed relevant condition must be dispositioned. In the interim, the examination acceptance criterion is the absence of any detectable surface-breaking indication.

4.1.4 Surface Examination

Surface ET (eddy current testing) examination is specified as an alternative or as a supplement to visual examinations. No specific acceptance criteria for surface (ET) examination of PWR internals locations are provided in the ASME Code Section XI. Since surface ET is employed as a signal-based examination, a technical justification per the Inspection Standard, MRP-228 provides the basis for detection and length sizing of surface-breaking or near-surface cracks. The signal-based relevant indication for surface (ET) is thus the same as the relevant condition for enhanced visual (EVT-1) examination. The acceptance criteria for enhanced visual (EVT-1) examinations in 4.1.3 (and accompanying entries in Table 5-5) are therefore applied when this method is used as an alternative or supplement to visual examination.

4.1.5 Volumetric Examination

The intent of volumetric examinations specified for bolts and pins is to detect planar defects. No flaw sizing measurements are recorded or assumed in the acceptance or rejection of individual

bolts or pins. Individual bolts or pins are accepted based on the absence of relevant indications established as part of the examination technical justification. When a relevant indication is detected in the cross-sectional area of the bolt or pin, it is assumed to be non-functional and the indication is recorded. A bolt or pin that passes the criterion of the examination is considered functional.

Because of this pass/fail acceptance of individual bolts or pins, the examination acceptance criterion for volumetric (UT) examination of bolts and pins is based on a reliable detection of indications as established by the individual technical justification for the proposed examination. This is in keeping with current industry practice. For example, planar flaws on the order of 30% of the cross-sectional area have been determined reliably detectable in previous bolt NDE technical justifications for baffle-former bolting.

Bolted and pinned assemblies are evaluated for acceptance based on a plant specific evaluation.

4.2 Physical Measurements Examination Acceptance Criteria

Continued functionality can be confirmed by physical measurements where, for example, loss of material caused by wear, loss of pre-load of clamping force caused by various degradation mechanisms, or distortion/deflection caused by void swelling may occur. For Westinghouse designs, tolerances are available on a design or plant-specific basis. Specific acceptance criteria will be developed as required, and thus are not provided generically in this plan.

4.3 Expansion Criteria

The criterion for expanding the scope of examination from the Primary components to their linked Expansion components is contained in Table 5-5 for IPEC.

5
TABLES

Table 5-1
Indian Point 2 & 3 Component Cross Reference

Item	Letter NL-10-063 Component	MRP-191 Table 4-4	MRP-227
1	Core Baffle/Former Assembly – Bolts	Lower Internals Assembly – Baffle and Former Assembly Baffle-Edge Bolts Baffle-Former Bolts	Baffle-Former Assembly – Baffle-Edge Bolts (Table 4-3 and 5-3) Baffle-Former Assembly – Baffle-Former Bolts (Table 4-3 and 5-3)
2	Core Baffle/Former Assembly – Plates	Lower Internals Assembly – Baffle and Former Assembly Baffle Plates Former Plates	Baffle-Former Assembly – Assembly (Table 4-3 and 5-3)
3	Core Barrel Assembly – Bolts and Screws	Lower Internals Assembly – Baffle and Former Assembly Barrel-Former Bolts	Core Barrel Assembly – Barrel-Former Bolts (Table 4-6)
4	Core Barrel Assembly – Axial Flexure Plates (Thermal Shield Flexures)	Lower Internals Assembly – Neutron Panels/Thermal Shield Thermal Shield Flexures	Thermal Shield Assembly – Thermal Shield Flexures (Table 4-3 and 5-3)
5	Core Barrel Assembly – Flange	Lower Internals Assembly – Core Barrel Core Barrel Flange	Core Barrel Assembly – Core Barrel Flange (Table 4-6 and 4-9)

Table 5-1
Indian Point 2 & 3 Component Cross Reference

Item	Letter NL-10-063 Component	MRP-191 Table 4-4	MRP-227
6	Core Barrel Assembly – Ring Core Barrel Assembly – Shell Core Barrel Assembly – Thermal Shield	Lower Internals Assembly – Core Barrel Upper Core Barrel Lower Core Barrel Lower Internals Assembly – Neutron panels/thermal shield Thermal shield	None
7	Core Barrel Assembly – Lower Core Barrel Flange Weld Core Barrel Assembly – Upper Core Barrel Flange Weld	None Lower Internals Assembly – Core Barrel Core Barrel Flange	Core Barrel Assembly – Lower Core Barrel Flange Weld (Table 4-6) Core Barrel Assembly – Upper Core Barrel Flange Weld (Table 4-3 and 5-3)
8	Core Barrel Assembly – Outlet Nozzles	Lower Internals Assembly – Core Barrel Core Barrel Outlet Nozzles	Core Barrel Assembly – Core Barrel Outlet Nozzles (Table 4-6)
9	Lower Internals Assembly – Clevis Insert Bolt	Interfacing Components – Interfacing Components Clevis Insert Bolts	Alignment and Interfacing Components – Clevis Insert Bolts (Table 4-9)

Table 5-1
Indian Point 2 & 3 Component Cross Reference

Item	Letter NL-10-063 Component	MRP-191 Table 4-4	MRP-227
10	Lower Internals Assembly – Clevis Insert	Interfacing Components – Interfacing Components Clevis Inserts	None
11	Lower Internals Assembly – Intermediate Diffuser Plate	Lower Internals Assembly – Diffuser Plate Diffuser Plate	None
12	Lower Internals Assembly – Fuel Alignment Pin	Lower Internals Assembly – Lower Core Plate and Fuel Alignment Pins Fuel Alignment Pins	None
13	Lower Internals Assembly – Lower Core Plate	Lower Internals Assembly – Lower Core Plate and Fuel Alignment Pins Lower Core Plate	Lower Internals Assembly – Lower Core Plate (Table 4-9, 2 places)

Table 5-1
Indian Point 2 & 3 Component Cross Reference

Item	Letter NL-10-063 Component	MRP-191 Table 4-4	MRP-227
14	Lower Internals Assembly – • Lower Core Support Castings • Column Cap • Lower Core Support Column Bodies	Lower Internals Assembly – Lower Support Casting or Forging Lower Support Casting None Lower Internals Assembly – Lower Support Column Assembly Lower Support Column Bodies	None None Lower Support Assembly – Lower Support Column Bodies (Cast) (Table 4-6)
15	Lower Internals Assembly – Lower Core Support Plate Column Bolt	Lower Internals Assembly – Lower Support Column Assembly Lower Support Column Bolts	Lower Support Assembly – Lower Support Column Bolts (Table 4-6)
16	Lower Internals Assembly – Lower Core Support Plate Column Sleeves	Lower Internals Assembly – Lower Support Column Assembly Lower Support Column Sleeves	None
17	Lower Internals Assembly – Radial Key	Lower Internals Assembly – Radial Support Keys Radial Support Keys	None

Table 5-1
Indian Point 2 & 3 Component Cross Reference

Item	Letter NL-10-063 Component	MRP-191 Table 4-4	MRP-227
18	Lower Internals Assembly – Secondary Core Support	Lower Internals Assembly – Secondary Core Support (SCS) Assembly SCS Base Plate	None
19	RCCA Guide Tube Assembly – Bolt	Upper Internals Assembly – Control Rod Guide Tube Assemblies and Flow Downcomers Bolts	None
20	RCCA Guide Tube Assembly – Guide Tube (including Lower Flange Welds)	Upper Internals Assembly – Control Rod Guide Tube Assemblies and Flow Downcomers Flanges – lower	Control Rod Guide Tube Assembly – Lower Flange Welds (Table 4-3 and 5-3)
21	RCCA Guide Tube Assembly – Guide Plates	Upper Internals Assembly – Control Rod Guide Tube Assemblies and Flow Downcomers Guide Plates/Cards	Control Rod Guide Tube Assembly – Guide Plates (Cards) (Table 4-3 and 5-3)
22	RCCA Guide Tube Assembly – Support Pin	Upper Internals Assembly – Control Rod Guide Tube Assemblies and Flow Downcomers Guide Tube Support Pins	None

Table 5-1
Indian Point 2 & 3 Component Cross Reference

Item	Letter NL-10-063 Component	MRP-191 Table 4-4	MRP-227
23	Core Plate Alignment Pin	Interfacing Components – Interfacing Components Upper Core Plate Alignment Pins	Alignment and Interfacing Components – Upper Core Plate Alignment Pins (Table 4-9)
24	Head/Vessel Alignment Pin	Interfacing Components – Interfacing Components Head and Vessel Alignment Pins	None
25	Hold-down Spring	Interfacing Components – Interfacing Components Internals Hold Down Spring	Alignment and Interfacing Components – Internals Hold Down Spring (Table 4-3 and 5-3)
26	Mixing Devices - Support Column Orifice Base - Support Column Mixer	Upper Internals Assembly – Mixing Devices Mixing devices	None
27	Support Column	Upper Internals Assembly – Upper Support Column Assemblies Column Bodies	None

Table 5-1
Indian Point 2 & 3 Component Cross Reference

Item	Letter NL-10-063 Component	MRP-191 Table 4-4	MRP-227
28	Upper Core Plate, Fuel Alignment Pin	Upper Internals Assembly – Upper Core Plate and Fuel Alignment Pins Fuel Alignment Pins	None
29	Upper Support Plate, Support Assembly (Including Ring)	Upper Internals Assembly – Upper Support Plate Assembly Upper Support Plate	Upper Internals Assembly – Upper Support Ring or Skirt (Table 4-9)
30	Upper Support Column Bolt	Upper Internals Assembly – Upper Support Column Assemblies Bolts	None
31	Bottom Mounted Instrumentation Column	Lower Internals Assembly – Bottom-Mounted Instrumentation (BMI) Column Assemblies BMI Column Bodies	Bottom Mounted Instrumentation System – Bottom Mounted Instrumentation (BMI) Column Bodies (Table 4-6)
32	Flux Thimble Guide Tube	Lower Internals Assembly – Flux Thimbles (Tubes) Flux Thimbles (Tubes)	Bottom Mounted Instrumentation System – Flux Thimble Tubes (Table 4-9)

Table 5-1
Indian Point 2 & 3 Component Cross Reference

Item	Letter NL-10-063 Component	MRP-191 Table 4-4	MRP-227
33	Thermocouple Conduit	Upper Internals Assembly – Upper Instrumentation Conduit and Support Conduits	None

Table 5-2
Primary Components at IPEC Units 2 and 3

Item	Applicability	Effect (Mechanism)	Expansion Link	Examination Method/Frequency	Examination Coverage
Control Rod Guide Tube Assembly Guide plates (cards)	IPEC Units 2 and 3	Loss of Material (Wear)	None	Visual (VT-3) examination no later than 2 refueling outages from the beginning of the license renewal period. Subsequent examinations are required on a ten-year interval.	20% examination of the number of CRGT assemblies, with all guide cards within each selected CRGT assembly examined. See Figure 2-2
Control Rod Guide Tube Assembly Lower flange welds	IPEC Units 2 and 3	Cracking (SCC, Fatigue)	Bottom-mounted instrumentation (BMI) column bodies, Lower support column bodies (cast)	Enhanced visual (EVT-1) examination to determine the presence of crack-like surface flaws in flange welds no later than 2 refueling outages from the beginning of the license renewal period and subsequent examination on a ten-year interval.	100% of outer (accessible) CRGT lower flange weld surfaces and adjacent base metal. See Figure 2-3
Core Barrel Assembly Upper core barrel flange weld	IPEC Units 2 and 3	Cracking (SCC)	None	Enhanced visual (EVT-1) examination, no later than 2 refueling outages from the beginning of the license renewal period and subsequent examination on a ten-year interval.	100% of one side of the accessible surfaces of the selected weld and adjacent base metal. See Figure 2-4

Table 5-2
Primary Components at IPEC Units 2 and 3

Item	Applicability	Effect (Mechanism)	Expansion Link	Examination Method/Frequency	Examination Coverage
Baffle-Former Assembly Baffle-edge bolts	IPEC Units 2 and 3	Cracking (IASCC, Fatigue) that results in • Lost or broken locking devices • Failed or missing bolts • Protrusion of bolt heads	None	Visual (VT-3) examination, with baseline examination between 20 and 40 EFPY and subsequent examinations on a ten-year interval.	Bolts and locking devices on high fluence seams. 100% of components accessible from core side. 75% of a component's total (accessible + inaccessible) inspection area or volume will be examined or, when addressing a set of like components (e.g., bolting), that the inspection examine a minimum sample size of 75 percent of the total population of like components. For the inspection of a set of like components, it is understood that essentially 100% of the volume/area of each accessible like component will be examined. See Figure 2-5

Table 5-2
Primary Components at IPEC Units 2 and 3

Item	Applicability	Effect (Mechanism)	Expansion Link	Examination Method/Frequency	Examination Coverage
Baffle-Former Assembly Baffle-former bolts	IPEC Units 2 and 3	Cracking (IASCC, Fatigue)	Lower support column bolts, Barrel-former bolts	Baseline volumetric (UT) examination between 25 and 35 EFPY, with subsequent examination after 10 years to confirm stability of bolting pattern.	100% of accessible bolts or as supported by plant-specific justification. Heads accessible from the core side. UT accessibility may be affected by complexity of head and locking device designs. 75% of a component's total (accessible + inaccessible) inspection area or volume will be examined or, when addressing a set of like components (e.g., bolting), that the inspection examine a minimum sample size of 75 percent of the total population of like components. For the inspection of a set of like components, it is understood that essentially 100% of the volume/area of each accessible like component will be examined. See Figures 2-5 and 2-6.

Table 5-2
Primary Components at IPEC Units 2 and 3

Item	Applicability	Effect (Mechanism)	Expansion Link	Examination Method/Frequency	Examination Coverage
Baffle-Former Assembly Assembly	IPEC Units 2 and 3	Distortion (Void Swelling), or Cracking (IASCC) that results in • Abnormal interaction with fuel assemblies • Gaps along high fluence baffle joint • Vertical displacement of baffle plates near high fluence joint • Broken or damaged edge bolt locking systems along high fluence baffle joint	None	Visual (VT-3) examination to check for evidence of distortion, with baseline examination between 20 and 40 EFPY and subsequent examinations on a ten-year interval.	Core side surface as indicated. See Figures 2-6, 2-7, 2-8 and 2-9.
Alignment and Interfacing Components Internals hold down spring	IPEC Units 2 and 3	Distortion (Loss of Load) Note: This mechanism was not strictly identified in the original list of age-related degradation mechanisms.	None	Direct measurement of spring height within three cycles of the beginning of the license renewal period. If the first set of measurements is not sufficient to determine life, spring height measurements must be taken during the next two outages, in order to extrapolate the expected spring height to 60 years.	Measurements should be taken at several points around the circumference of the spring, with a statistically adequate number of measurements at each point to minimize uncertainty. Replacement of 304 springs by 403 springs is required when the spring stiffness is determined to relax beyond design tolerance. See Figure 2-10

Table 5-2
Primary Components at IPEC Units 2 and 3

Item	Applicability	Effect (Mechanism)	Expansion Link	Examination Method/Frequency	Examination Coverage
Thermal Shield Assembly Thermal shield flexures	IPEC Units 2 and 3	Cracking (Fatigue) or Loss of Materials (Wear) that results in thermal shield flexures excessive wear, fracture or complete separation	None	Visual (VT-3) no later than 2 refueling outages from the beginning of the license renewal period. Subsequent examinations on a ten year interval.	100% of thermal shield flexures See Figures 2-11 and 2-16
Core Barrel Assembly Upper and lower core barrel welds	IPEC Units 2 and 3	Cracking (IASCC, Neutron Embrittlement)	None	Enhanced visual (EVT-1) examination, no later than 2 refueling outages from the beginning of the license renewal period and subsequent examination on a ten-year interval.	100% of one side of the accessible surfaces of the selected weld and adjacent base metal. See Figure 2-4
Core Barrel Assembly Lower core barrel flange weld (At IPEC this weld is the lower core barrel to lower support casting weld. IPEC does not have a lower core barrel flange)	IPEC Units 2 and 3	Cracking (IASCC, Neutron Embrittlement)	None	Enhanced visual (EVT-1) examination, no later than 2 refueling outages from the beginning of the license renewal period and subsequent examination on a ten-year interval.	100% of one side of the accessible surfaces of the selected weld and adjacent base metal. See Figure 2-4 (Core Barrel to Support Plate Weld)

Table 5-3
Expansion Components at IPEC Units 2 and 3

Item	Applicability	Effect (Mechanism)	Primary Link	Examination Method	Examination Coverage
Core Barrel Assembly Barrel-former bolts	IPEC Units 2 and 3	Cracking (IASCC, Fatigue)	Baffle-former bolts	Volumetric (UT) examination, with initial examinations dependent on results of baffle-former bolt examinations. Re-examinations at 10 year intervals once degradation is identified in the primary component.	100% of accessible bolts. The inspection shall examine a minimum sample size of 75% of the total population of bolts. Accessibility may be limited by presence of thermal shields. 75% of a component's total (accessible + inaccessible) inspection area or volume will be examined or, when addressing a set of like components (e.g., bolting), that the inspection examine a minimum sample size of 75 percent of the total population of like components. For the inspection of a set of like components, it is understood that essentially 100% of the volume/area of each accessible like component will be examined. See Figure 2-5

Table 5-3
Expansion Components at IPEC Units 2 and 3

Item	Applicability	Effect (Mechanism)	Primary Link	Examination Method	Examination Coverage
Lower Support Assembly Lower support column bolts	IPEC Units 2 and 3	Cracking (IASCC, Fatigue)	Baffle-former bolts	Volumetric (UT) examination, with initial examinations dependent on results of baffle-former bolt examinations. Re-examinations at 10 year intervals once degradation is identified in the primary component.	100% of accessible bolts or as supported by plant-specific justification. The inspection shall examine a minimum sample size of 75 percent of the total population of bolts. 75% of a component's total (accessible + inaccessible) inspection area or volume will be examined or, when addressing a set of like components (e.g., bolting), that the inspection examine a minimum sample size of 75 percent of the total population of like components. For the inspection of a set of like components, it is understood that essentially 100% of the volume/area of each accessible like component will be examined. See Figures 2-12 and 2-13

Table 5-3
Expansion Components at IPEC Units 2 and 3

Item	Applicability	Effect (Mechanism)	Primary Link	Examination Method	Examination Coverage
Core Barrel Assembly Core barrel flange, Core barrel outlet nozzles	IPEC Units 2 and 3	Cracking (SCC, Fatigue)	Upper core barrel flange weld	Enhanced visual (EVT-1) examination, with initial examination frequency dependent on the examination results for upper core barrel flange. Re-examinations at 10 year intervals once degradation is identified in the primary component.	100% of one side of the accessible surfaces of the selected weld and adjacent base metal. 75% of a component's total (accessible + inaccessible) inspection area or volume will be examined or, when addressing a set of like components (e.g., bolting), that the inspection examine a minimum sample size of 75 percent of the total population of like components. For the inspection of a set of like components, it is understood that essentially 100% of the volume/area of each accessible like component will be examined. See Figure 2-4

Table 5-3
Expansion Components at IPEC Units 2 and 3

Item	Applicability	Effect (Mechanism)	Primary Link	Examination Method	Examination Coverage
Lower Support Assembly Lower support column bodies (non cast)	IPEC lower support column bodies are cast. They are captured in the next Item of this table.				
Lower Support Assembly Lower support column bodies (cast)	IPEC Units 2 and 3	Cracking (IASCC) including the detection of fractured support columns	Control rod guide tube (CRGT) lower flanges	Visual (EVT-1) examination. Re-examinations at 10 year intervals once degradation is identified in the primary component.	100% of accessible support columns. 75% of a component's total (accessible + inaccessible) inspection area or volume will be examined or, when addressing a set of like components (e.g., bolting), that the inspection examine a minimum sample size of 75 percent of the total population of like components. For the inspection of a set of like components, it is understood that essentially 100% of the volume/area of each accessible like component will be examined. See Figure 2-14

Table 5-3
Expansion Components at IPEC Units 2 and 3

Item	Applicability	Effect (Mechanism)	Primary Link	Examination Method	Examination Coverage
Bottom Mounted Instrumentation System Bottom-mounted instrumentation (BMI) column bodies	IPEC Units 2 and 3	Cracking (Fatigue) including the detection of completely fractured column bodies	Control rod guide tube (CRGT) lower flanges	Visual (VT-3) examination of BMI column bodies as indicated by difficulty of insertion/withdrawal of flux thimbles. Flux thimble insertion/withdrawal to be monitored at each inspection interval. Re-examinations at 10 year intervals once degradation is identified in the primary component.	100% of BMI column bodies for which difficulty is detected during flux thimble insertion/withdrawal. See Figure 2-15
Upper Internals Assembly Upper core plate	IPEC Units 2 and 3	Cracking (SCC, Fatigue)	Control rod guide tube (CRGT) lower flange weld	Enhanced visual (EVT-1) examination, with initial examination frequency dependent on the examination results for CRGT lower flange weld. Re-examinations at 10 year intervals once degradation is identified in the primary component.	100% of accessible upper core plate. 75% of a component's total (accessible + inaccessible) inspection area or volume will be examined or, when addressing a set of like components (e.g., bolting), that the inspection examine a minimum sample size of 75 percent of the total population of like components. For the inspection of a set of like components, it is understood that essentially 100% of the volume/area of each accessible like component will be examined. See Figure 2-1

Table 5-3
Expansion Components at IPEC Units 2 and 3

Item	Applicability	Effect (Mechanism)	Primary Link	Examination Method	Examination Coverage
Lower Support Assembly Lower support casting	IPEC Units 2 and 3	Cracking (SCC, Fatigue)	Control rod guide tube (CRGT) lower flange weld	Enhanced visual (EVT-1) examination, with initial examination frequency dependent on the examination results for CRGT lower flange weld. Re-examinations at 10 year intervals once degradation is identified in the primary component.	100% of accessible lower support casting. 75% of a component's total (accessible + inaccessible) inspection area or volume will be examined or, when addressing a set of like components (e.g., bolting), that the inspection examine a minimum sample size of 75 percent of the total population of like components. For the inspection of a set of like components, it is understood that essentially 100% of the volume/area of each accessible like component will be examined. See Figure 2-1 (Core Support)

Table 5-4
Existing Program Components at IPEC Units 2 and 3

Item	Applicability	Effect (Mechanism)	Primary Link	Examination Method	Examination Coverage
Core Barrel Assembly Core barrel flange	IPEC Units 2 and 3	Loss of material (Wear)	ASME Code Section XI	Visual (VT-3) examination to determine general condition for excessive wear.	All accessible surfaces at ASME Section XI specified frequency.
Upper Internals Assembly Upper support ring or skirt (This item is N/A because IPEC has a tophat design)	N/A	N/A	N/A	N/A	N/A
Lower Internals Assembly Lower core plate	IPEC Units 2 and 3	Cracking (IASCC, Fatigue)	ASME Code Section XI	Visual (VT-3) examination of the lower core plates to detect evidence of distortion and/or loss of bolt integrity.	All accessible surfaces at ASME Section XI specified frequency.
Lower Internals Assembly Lower core plate	IPEC Units 2 and 3	Loss of material (Wear)	ASME Code Section XI	Visual (VT-3) examination.	All accessible surfaces at ASME Section XI specified frequency.
Bottom Mounted Instrumentation System Flux thimble tubes	IPEC Units 2 and 3	Loss of material (Wear)	N/A	Surface (ET) examination.	N/A
Alignment and Interfacing Components Clevis insert bolts	IPEC Units 2 and 3	Loss of material (Wear)	ASME Code Section XI	Visual (VT-3) examination.	All accessible surfaces at ASME Section XI specified frequency.
Alignment and Interfacing Components Upper core plate alignment pins	IPEC Units 2 and 3	Loss of material (Wear)	ASME Code Section XI	Visual (VT-3) examination.	All accessible surfaces at ASME Section XI specified frequency.

Table 5-5

Examination Acceptance and Expansion Criteria at IPEC Units 2 and 3

Item	Applicability	Examination Acceptance Criteria (Note 1)	Expansion Link(s)	Expansion Criteria	Additional Examination Acceptance Criteria
Control Rod Guide Tube Assembly Guide plates (cards)	IPEC Units 2 and 3	Visual (VT-3) examination. The specific relevant condition is wear that could lead to loss of control rod alignment and impede control assembly insertion.	None	N/A	N/A
Control Rod Guide Tube Assembly Lower flange welds	IPEC Units 2 and 3	Enhanced visual (EVT-1) examination. The specific relevant condition is a detectable crack-like surface indication.	a. Bottom-mounted instrumentation (BMI) column bodies b. Lower support column bodies (cast)	a. Confirmation of surface-breaking indications in two or more CRGT lower flange welds, combined with flux thimble insertion/withdrawal difficulty, shall require visual (VT-3) examination of BMI column bodies by the completion of the next refueling outage. b. Confirmation of surface-breaking indications in two or more CRGT lower flange welds shall require EVT-1 examination of cast lower support column bodies within three fuel cycles following the initial observation.	a. For BMI column bodies, the specific relevant condition for the VT-3 examination is completely fractured column bodies. b. For cast lower support column bodies, the specific relevant condition is a detectable crack-like surface indication.

Table 5-5

Examination Acceptance and Expansion Criteria at IPEC Units 2 and 3

Item	Applicability	Examination Acceptance Criteria (Note 1)	Expansion Link(s)	Expansion Criteria	Additional Examination Acceptance Criteria
Core Barrel Assembly Upper core barrel flange weld Upper and lower core barrel welds Lower core barel flange weld (At IPEC this weld is the lower core barrel to lower support casting weld. IPEC does not have a lower core barrel flange) Core barrel flange Core barrel outlet nozzles	IPEC Units 2 and 3	Enhanced visual (EVT-1) examination. The specific relevant condition is a detectable crack-like surface indication.	None	N/A	N/A
Baffle-Former Assembly Baffle-edge bolts	IPEC Units 2 and 3	Visual (VT-3) examination. The specific relevant conditions are missing or broken locking devices, failed or missing bolts, and protrusion of bolt heads.	None	N/A	N/A

Table 5-5

Examination Acceptance and Expansion Criteria at IPEC Units 2 and 3

Item	Applicability	Examination Acceptance Criteria (Note 1)	Expansion Link(s)	Expansion Criteria	Additional Examination Acceptance Criteria
Baffle-Former Assembly Baffle-former bolts	IPEC Units 2 and 3	Volumetric (UT) examination. The examination acceptance criteria for the UT of the baffle-former bolts shall be established as part of the examination technical justification.	a. Lower support column bolts b. Barrel-former bolts	a. Confirmation that more than 5% of the baffle-former bolts actually examined on the four baffle plates at the largest distance from the core (presumed to be the lowest dose locations) contain unacceptable indications shall require UT examination of the lower support column bolts within the next three fuel cycles. b. Confirmation that more than 5% of the lower support column bolts actually examined contain unacceptable indications shall require UT examination of the barrel-former bolts.	a and b. The examination acceptance criteria for the UT of the lower support column bolts and the barrel-former bolts shall be established as part of the examination technical justification.

Table 5-5

Examination Acceptance and Expansion Criteria at IPEC Units 2 and 3

Item	Applicability	Examination Acceptance Criteria (Note 1)	Expansion Link(s)	Expansion Criteria	Additional Examination Acceptance Criteria
Baffle-Former Assembly Assembly	IPEC Units 2 and 3	Visual (VT-3) examination. The specific relevant conditions are evidence of abnormal interaction with fuel assemblies, gaps along high fluence shroud plate joints, vertical displacement of shroud plates near high fluence joints, and broken or damaged edge bolt locking systems along high fluence baffle plate joints.	None	N/A	N/A
Alignment and Interfacing Components Internals hold down spring	IPEC Units 2 and 3	Direct physical measurement of spring height. The examination acceptance criterion for this measurement is that the remaining compressible height of the spring shall provide hold-down forces within the plant-specific design tolerance.	None	N/A	N/A

Table 5-5

Examination Acceptance and Expansion Criteria at IPEC Units 2 and 3

Item	Applicability	Examination Acceptance Criteria (Note 1)	Expansion Link(s)	Expansion Criteria	Additional Examination Acceptance Criteria
Thermal Shield Assembly Thermal shield flexures	IPEC Units 2 and 3	Visual (VT-3) examination. The specific relevant conditions for thermal shield flexures are excessive wear, fracture, or complete separation.	None	N/A	N/A
Upper Internals Assembly Upper core plate	IPEC Units 2 and 3	Enhanced visual (EVT-1) examination. The specific relevant condition is a detectable crack-like surface indication.	None	N/A	N/A
Lower Support Assembly Lower support casting	IPEC Units 2 and 3	Enhanced visual (EVT-1) examination. The specific relevant condition is a detectable crack-like surface indication.	None	N/A	N/A

Notes:
1. The examination acceptance criterion for visual examination is the absence of the specified relevant condition

Table 5-6
Reactor Vessel Component ISI Program Inspection Plan for IPEC Units 2 and 3

Component	Code Category	Examination Method	Extent of Exam
Reactor Vessel Interior Radial Support Keys	B-N-2	VT-1 or VT-3	Components and areas as accessible
Reactor Vessel Interior Bottom Head Instrumentation Nozzles	B-N-2	VT-1 or VT-3	Components and areas as accessible
Reactor Vessel Interior Outlet and Inlet Nozzle mating surfaces and inside of nozzles	B-N-2	VT-1 or VT-3	Components and areas as accessible
Reactor Vessel Interior Upper internal to vessel mating surface with keys and access slots	B-N-2	VT-1 or VT-3	Components and areas as accessible
Reactor Vessel Interior Vessel flange surface	B-N-2	VT-1 or VT-3	Components and areas as accessible
Lower Internals - Exterior Core barrel surface	B-N-3	VT-3	Components and areas as accessible
Lower Internals - Exterior Thermal Shield	B-N-3	VT-3	Components and areas as accessible
Lower Internals - Exterior Irradiation specimen tubes and guides	B-N-3	VT-3	Components and areas as accessible
Lower Internals - Exterior Flexures	B-N-3	VT-3	Components and areas as accessible

Table 5-6
Reactor Vessel Component ISI Program Inspection Plan for IPEC Units 2 and 3

Component	Code Category	Examination Method	Extent of Exam
Lower Internals - Exterior Fasteners and locking devices	B-N-3	VT-3	Components and areas as accessible
Lower Internals - Exterior Outlet nozzle at 22 deg	B-N-3	VT-3	Components and areas as accessible
Lower Internals - Exterior Outlet nozzle at 158 deg	B-N-3	VT-3	Components and areas as accessible
Lower Internals - Exterior Outlet nozzle at 202 deg	B-N-3	VT-3	Components and areas as accessible
Lower Internals - Exterior Outlet nozzle at 338 deg	B-N-3	VT-3	Components and areas as accessible
Lower Internals – Exterior Bottom Lower core support plate	B-N-3	VT-3	Components and areas as accessible
Lower Internals – Exterior Bottom Flow distribution plate	B-N-3	VT-3	Components and areas as accessible
Lower Internals – Exterior Bottom Lower support casting	B-N-3	VT-3	Components and areas as accessible
Lower Internals – Exterior Bottom Core support column	B-N-3	VT-3	Components and areas as accessible
Lower Internals – Exterior Bottom Secondary core support	B-N-3	VT-3	Components and areas as accessible

Table 5-6
Reactor Vessel Component ISI Program Inspection Plan for IPEC Units 2 and 3

Component	Code Category	Examination Method	Extent of Exam
Lower Internals – Exterior Bottom Instrumentation guides	B-N-3	VT-3	Components and areas as accessible
Lower Internals – Exterior Bottom Radial support keys	B-N-3	VT-3	Components and areas as accessible
Lower Internals – Interior Bottom Outlet nozzle at 22 deg	B-N-3	VT-3	Components and areas as accessible
Lower Internals – Interior Bottom Outlet nozzle at 158 deg	B-N-3	VT-3	Components and areas as accessible
Lower Internals – Interior Bottom Outlet nozzle at 202 deg	B-N-3	VT-3	Components and areas as accessible
Lower Internals – Interior Bottom Outlet nozzle at 338 deg	B-N-3	VT-3	Components and areas as accessible
Lower Internals – Interior Bottom Core barrel alignment pin	B-N-3	VT-3	Components and areas as accessible
Lower Internals – Interior Bottom Lower core plate	B-N-3	VT-3	Components and areas as accessible
Lower Internals – Interior Bottom Fuel alignment pins	B-N-3	VT-3	Components and areas as accessible

Table 5-7
List of IPEC Reactor Vessel Interior Components and Materials Based on MRP-191 – Table 4-4

UPPER INTERNALS ASSEMBLY			
Sub Assembly	**Component**	**Material**	**Category from MRP-191 Table 7-2**
Control rod guide tube assemblies and flow downcomers	Anti-rotation studs and nuts	Stainless steel	A
	Bolts	Stainless steel	A
	C-tubes	Stainless steel	C
	Enclosure pins	Stainless steel	A
	Upper guide tube enclosures	Stainless steel	A
	Flanges intermediate	Stainless steel	A
	Flanges lower	Stainless steel	A
	Flexureless inserts	Stainless steel	A
	Guide plates/cards	Stainless steel	C
	Guide tube support pins (split pins)	A X-750 (IP2 only)	C
	Guide tube support pins (split pins)	Stainless steel (IP3 only)	A
	Housing plates	Stainless steel	A
	Inserts	Stainless steel	A
	Lock bars	Stainless steel	A
	Sheaths	Stainless steel	C
	Support pin cover plate	Stainless steel	A
	Support pin cover plate cap screws	Stainless steel	A
	Support pin cover plate locking caps and tie straps	Stainless steel	A
	Support pin nuts	Alloy X-750	A
	Support pin nuts	Stainless steel	A
	Water flow slot ligaments	Stainless steel	A
Mixing Devices	Mixing devices	CASS	A
Upper core plate and fuel alignment pins	Fuel alignment pins	Stainless steel	A
	Upper core plate	Stainless steel	A
Upper instrumentation conduit and supports	Bolting	Stainless steel	A
	Brackets,clamps,terminal blocks, and conduit straps	Stainless steel	A
	Conduit seal assembly-body, tubesheets	Stainless steel	A
	Conduit seal assembly-tubes	Stainless steel	A
	Conduits	Stainless steel	A
	Flange base	Stainless steel	A
	Locking caps	Stainless steel	A
	Support tubes	Stainless steel	A
Upper plenum	UHI flow column bases	CASS	A
	UHI flow columns	Stainless steel	A

Table 5-7
List of IPEC Reactor Vessel Interior Components and Materials Based on MRP-191 – Table 4-4

UPPER INTERNALS ASSEMBLY			
Sub Assembly	**Component**	**Material**	**Category from MRP-191 Table 7-2**
Upper support column assemblies	Adapters	Stainless steel	A
	Bolts	Stainless steel	A
	Column bases	CASS	A
	Column bodies	Stainless steel	A
	Extension tubes	Stainless steel	A
	Flanges	Stainless steel	A
	Lock keys	Stainless steel	A
	Nuts	Stainless steel	A
Upper support plate assembly	Bolts	Stainless steel	A
	Deep beam ribs	Stainless steel	A
	Deep beam stiffeners	Stainless steel	A
	Flange	Stainless steel	A
	Inverted top hat flange	Stainless steel	A
	Inverted top hat upper support plate	Stainless steel	A
	Lock keys	Stainless steel	A
	Ribs	Stainless steel	A
	Upper suport plate	Stainless steel	A
	Upper support ring or skirt	Stainless steel	B
LOWER INTERNALS ASSEMBLY			
Sub Assembly	**Component**	**Material**	**Category from MRP-191 Table 7-2**
Baffle and former assembly	Baffle bolting locking bar	Stainless steel	A
	Baffle edge bolts	Stainless steel	C
	Baffle plates	Stainless steel	B
	Baffle former bolts	Stainless steel	C
	Barrel former bolts	Stainless steel	C
	Former plates	Stainless steel	B
Bottom mounted instrumentation (BMI) column assemblies	BMI column bodies	Stainless steel	B
	BMI column bolts	Stainless steel	A
	BMI column collars	Stainless steel	B
	BMI column cruciforms	CASS	B
	BMI column extension bars	Stainless steel	A
	BMI column extension tubes	Stainless steel	B
	BMI column lock caps	Stainless steel	A
	BMI column nuts	Stainless steel	A
Core barrel	Core barrel flange	Stainless steel	B
	Core barrel outlet nozzles	Stainless steel	B
	Upper core barrel	Stainless steel	C
	Lower core barrel	Stainless steel	C
Diffuser plate	Diffuser plate	Stainless steel	A

Table 5-7
List of IPEC Reactor Vessel Interior Components and Materials Based on MRP-191 – Table 4-4

LOWER INTERNALS ASSEMBLY			
Sub Assembly	**Component**	**Material**	**Category from MRP-191 Table 7-2**
Flux thimbles (tubes)	Flux thimble tube plugs - IPEC does not use tube plugs, instead tubes are capped (IP2 has 9 tubes capped, IP3 has 0 tubes capped)	Stainless steel	B
	Flux thimbles (tubes)	Stainless steel	C
Irradiation specimen guides	Irradiation specimen guide	Stainless steel	A
	Irradiation specimen guide bolts	Stainless steel	A
	Irradiation specimen lock caps	Stainless steel	A
	Specimen plugs	Stainless steel	A
Lower core plate (LCP) and fuel alignment pins	Fuel alignment pins	Stainless steel	A
	LCP fuel alignment pin bolts	Stainless steel	A
	LCP fuel alignment pin lock caps	Stainless steel	A
	Lower core plate	Stainless steel	C
Lower support column assemblies	Lower support column bodies	CASS	B
	Lower support column bolts	Stainless steel	B
	Lower support column nuts	Stainless steel	A
	Lower support column sleeves	Stainless steel	A
Lower support casting or forging	Lower support casting	CASS	A
Neutron panels/thermal shield	Thermal shield bolts	Stainless steel	A
	Thermal shield dowels	Stainless steel	A
	Thermal shield flexures	Stainless steel	B
	Thermal shield	Stainless steel	A
Radial support keys	Radial support key bolts	Stainless steel	A
	Radial support key lock keys	Stainless steel	A
	Radial support keys	Stainless steel	A
Secondary core support (SCS) assembly	SCS base plate	Stainless steel	A
	SCS bolts	Stainless steel	A
	SCS energy absorber	Stainless steel	A
	SCS guide posts	Stainless steel	A
	SCS housing	Stainless steel	A
	SCS lock keys	Stainless steel	A
Interfacing Components	Clevis insert bolts	A X-750	B
	Clevis insert lock keys	Stainless steel	A
	Clevis inserts	Alloy 600	A
	Head and vessel allignment pin bolts	Stainless steel	A
	Head and vessel alignment pin lock caps	Stainless steel	A
	Head and vessel allignment pins	Stainless steel	A
	Internals hold down spring	304 Stainless steel	B
	Upper core plate alignment pins	Stainless steel	B

Table 5-8
IPEC Response to the NRC Final Safety Evaluation of MRP-227

MRP-227 SER Item	IPEC Response
SER Section 4.1.1, Topical Report Condition 1 Moving components to "Expansion" category from "No additional measures" category.	In accordance with SER Section 4.1.1, the upper core plate and the lower support casting have been added to the IPEC "Expansion" inspection category and are contained in Table 5-3. The components are linked to the "Primary" component CRGT lower flange weld. The examination method is consistent with the examinations performed on the CRGT lower flange weld.
SER Section 4.1.2, Topical Report Condition 2 Inspection of components subject to irradiation-assisted stress corrosion cracking	In accordance with SER Section 4.1.2, the upper and lower core barrel welds and lower core barrel to lower support casting weld have been added to the IPEC "Primary" inspection category and are contained in Table 5-2. The examination method is consistent with the MRP recommendations for these components, the examination coverage conforms to the criteria described in Section 3.3.1 of the NRC SE, and the re-examination frequency is on a 10-year interval consistent with other "Primary" inspection category components.
SER Section 4.1.3, Topical Report Condition 3 Inspection of high consequence components subject to multiple degradation mechanisms	No action required. This item does not apply to components in Westinghouse designed reactors.
SER Section 4.1.4, Topical Report Condition 4 Minimum examination coverage criteria for "expansion" inspection category components	In accordance with SER Section 4.1.4, IPEC will meet the minimum inspection coverage specified in the SER. The appropriate wording has been added to Table 5-3 examination coverage.
SER Section 4.1.5, Topical Report Condition 5 Examination frequencies for baffle-former bolts	In accordance with SER Section 4.1.5, the examination frequency for baffle-former bolts specifies a 10-year inspection frequency following the baseline inspection in Table 5-2.
SER Section 4.1.6, Topical Report Condition 6 Periodicity of the re-examination of "expansion" inspection category components	In accordance with SER Section 4.1.6, Table 5-3 requires a 10-year re-examination interval for all Expansion inspection category components once degradation is identified in the associated Primary inspection category component and examination of the expansion category component commences.
SER Section 4.1.7, Topical Report Condition 7 Updating of industry guideline	This condition applies to update of the industry guidelines. No plant-specific action required.
SER Section 4.2.1, Applicant/Licensee Action Item 1	The evaluation of design and operating history demonstrating that MRP-227 is applicable to IPEC is contained in Section 3.6.
SER Section 4.2.2, Applicant/Licensee Action Item 2	The IPEC review of components within the scope of license renewal against the information contained in MRP-191 Table 4-4 is discussed in Section 3.6.
SER Section 4.2.3, Applicant/Licensee Action Item 3	The IPEC discussion regarding guide tube support pins (split pins) is contained in Section 3.6.
SER Section 4.2.4, Applicant/Licensee Action Item 4	No action required. This item does not apply to Westinghouse designed units.
SER Section 4.2.5, Applicant/Licensee Action Item 5	The IPEC discussion regarding hold down springs is contained in Section 3.6.
SER Section 4.2.6, Applicant/Licensee Action Item 6	No action required. This item does not apply to Westinghouse designed units.
SER Section 4.2.7, Applicant/Licensee Action Item 7	The IPEC discussion regarding lower support column bodies is contained in Section 3.6.
SER Section 4.2.8, Applicant/Licensee Action Item 8	The submittal of information for staff review and approval is discussed in Section 3.6.

UNITED STATES OF AMERICA
NUCLEAR REGULATORY COMMISSION

BEFORE THE ATOMIC SAFETY AND LICENSING BOARD

In the Matter of	)	Docket Nos. 50-247-LR and
	)	50-286-LR
ENTERGY NUCLEAR OPERATIONS, INC.	)	
	)	
(Indian Point Nuclear Generating Units 2 and 3)	)	
	)	October 25, 2011

CERTIFICATE OF SERVICE

I certify that, on October 25, 2011, a copy of "Applicant's Answer to New York State's and Riverkeeper's Joint Motion to Admit New Contention NYS-38/RK-TC-5" was served electronically with the Electronic Information Exchange on the following recipients:

Administrative Judge
Lawrence G. McDade, Chair
Atomic Safety and Licensing Board Panel
Mail Stop: T-3 F23
U.S. Nuclear Regulatory Commission
Washington, DC 20555-0001
(E-mail: Lawrence.McDade@nrc.gov)

Administrative Judge
Dr. Kaye D. Lathrop
Atomic Safety and Licensing Board Panel
190 Cedar Lane E.
Ridgway, CO 81432
(E-mail: Kaye.Lathrop@nrc.gov)

Administrative Judge
Dr. Richard E. Wardwell
Atomic Safety and Licensing Board Panel
Mail Stop: T-3 F23
U.S. Nuclear Regulatory Commission
Washington, DC 20555-0001
(E-mail: Richard.Wardwell@nrc.gov)

Office of the Secretary
Attn: Rulemaking and Adjudications Staff
U.S. Nuclear Regulatory Commission
Washington, D.C. 20555-0001
(E-mail: hearingdocket@nrc.gov)

Office of Commission Appellate Adjudication
U.S. Nuclear Regulatory Commission
Mail Stop: O-7H4M
Washington, DC 20555-0001
(E-mail: ocaamail.resource@nrc.gov)

Josh Kirstein, Law Clerk
Katherine Tucker, Law Clerk
Atomic Safety and Licensing Board Panel
Mail Stop: T-3 F23
U.S. Nuclear Regulatory Commission
Washington, DC 20555-0001
(E-mail: Josh.Kirstein@nrc.gov)
(E-mail: Katie.Tucker@nrc.gov)

Sherwin E. Turk, Esq.
Beth N. Mizuno, Esq.
David E. Roth, Esq.
Brian G. Harris, Esq.
Andrea Z. Jones, Esq.
Office of the General Counsel
Mail Stop: O-15D21
U.S. Nuclear Regulatory Commission
Washington, DC 20555-0001
(E-mail: Sherwin.Turk@nrc.gov)
(E-mail: Beth.Mizuno@nrc.gov)
(E-mail: david.roth@nrc.gov)
(E-mail: brian.harris@nrc.gov)
(E-mail: andrea.jones@nrc.gov)

Melissa-Jean Rotini, Esq.
Assistant County Attorney
Office of Robert F. Meehan, Esq.
Westchester County Attorney
148 Martine Avenue, 6th Floor
White Plains, NY 10601
(E-mail: MJR1@westchestergov.com)

Manna Jo Greene
Stephen C. Filler
Karla Raimundi
Hudson River Sloop Clearwater, Inc.
724 Wolcott Ave.
Beacon, NY 12508
(E-mail: mannajo@clearwater.org)
(E-mail: karla@clearwater.org)
(E-mail: stephenfiller@gmail.com)

Thomas F. Wood, Esq.
Daniel Riesel, Esq.
Victoria Shiah, Esq.
Sive, Paget & Riesel, P.C.
460 Park Avenue
New York, NY 10022
(E-mail: driesel@sprlaw.com)
(E-mail: vshiah@sprlaw.com)

Joan Leary Matthews, Esq.
Associate Commissioner
Hearings and Mediation Services
New York State Department of
Environmental Conservation
625 Broadway, 14th Floor
Albany, NY 12233-1500
(E-mail: jlmatthe@gw.dec.state.ny.us)

John Louis Parker, Esq.
Office of General Counsel, Region 3
NYS Dept. of Environmental Conservation
21 S. Putt Corners Road
New Paltz, New York 12561-1620
(E-mail: jlparker@gw.dec.state.ny.us)

John J. Sipos, Esq.
Charlie Donaldson Esq.
Assistant Attorneys General
Office of the Attorney General
of the State of New York
The Capitol
Albany, NY 12224-0341
(E-mail: John.Sipos@ag.ny.gov)

Michael J. Delaney, Esq.
Vice President -Energy Department
New York City Economic Development
Corporation (NYCDEC)
110 William Street New York, NY 10038
mdelaney@nycedc.com

Phillip Musegaas, Esq.
Deborah Brancato, Esq.
Riverkeeper, Inc.
20 Secor Road
Ossining, NY 10562
(E-mail: phillip@riverkeeper.org)
(E-mail: dbrancato@riverkeeper.org)

Daniel E. O'Neill, Mayor
James Siermarco, M.S.
Village of Buchanan
Municipal Building
236 Tate Avenue
Buchanan, NY 10511-1298
(E-mail: vob@bestweb.net)
(E-mail: smurray@villageofbuchanan.com)

Robert D. Snook, Esq.
Assistant Attorney General
Office of the Attorney General
State of Connecticut
55 Elm Street
P.O. Box 120
Hartford, CT 06141-0120
(E-mail: Robert.Snook@po.state.ct.us)

Janice A. Dean, Esq.
Assistant Attorney General
Office of the Attorney General
of the State of New York
120 Broadway, 26th Floor
New York, New York 10271
(E-mail: Janice.Dean@ag.ny.gov)

Signed (electronically) by Martin J. O'Neill

Martin J. O'Neill, Esq.
MORGAN, LEWIS & BOCKIUS LLP
1000 Louisiana St., Suite 4000
Houston, TX 77002
Phone: (713) 890-5710
Fax: (713) 739-5001
E-mail: martin.oneill@morganlewis.com

Counsel for Entergy Nuclear Operations, Inc.

DB1/ 68388870.2