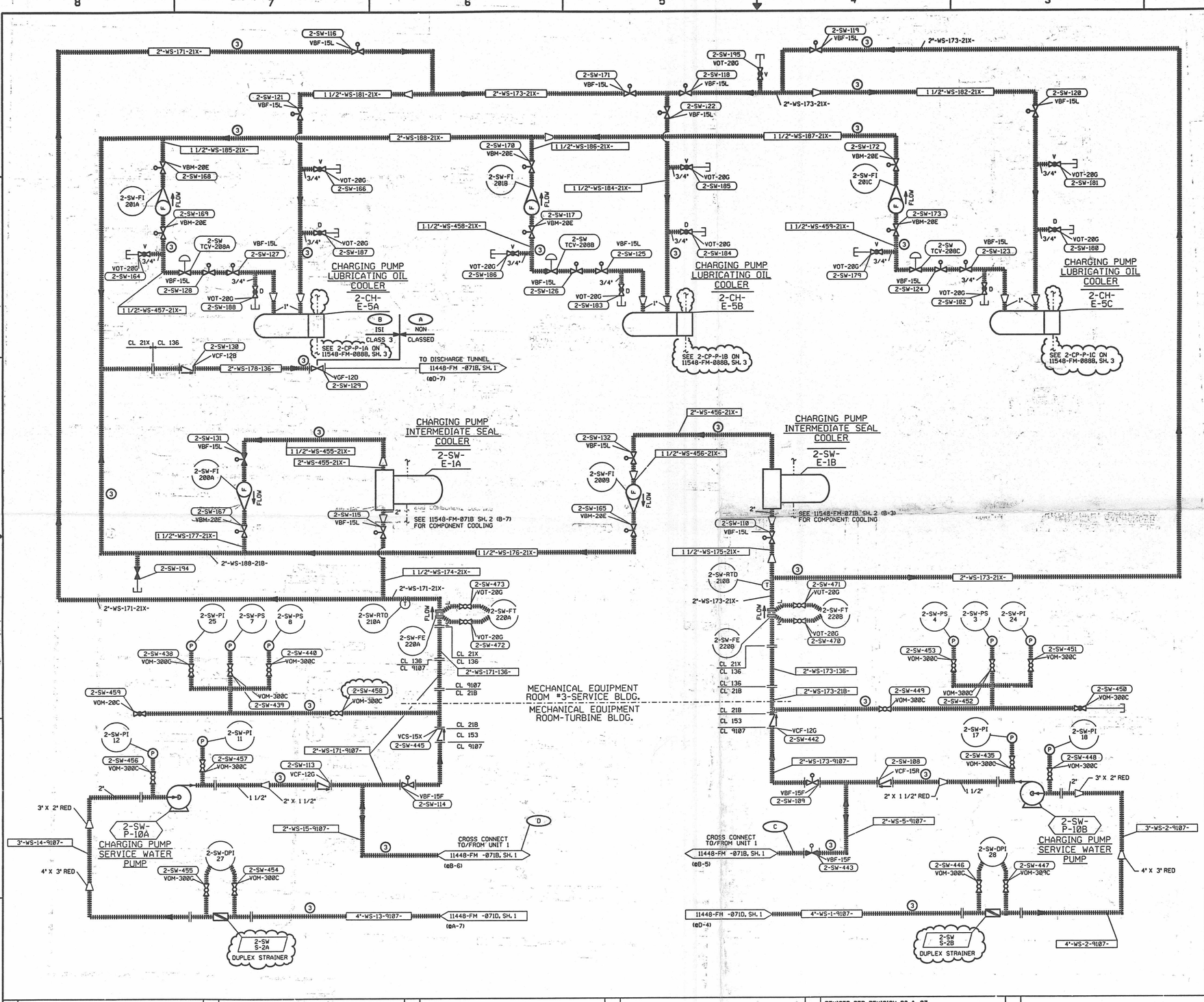

NOTES

1. NONE

REFERENCE DRAWINGS

NUMBER	TITLE
01. 11548-FM-21C/71C	FLOW AND VON DIAGRAMS, CIRCULATING & SERVICE WATER SYSTEM
02. 11548-FM-21D/71D	FLOW AND VON DIAGRAMS, CIRCULATING & SERVICE WATER SYSTEM
03. 11548-FM-072C	FLOW/VON DIAGRAM, COMPONENT COOLING WATER SYSTEM
04. 11548-FM-124A	FLOW/VON DIAGRAM, STEAM GEN BLOWN, RECIRC & XFER SYS
05. 11448-FM-071B	FLOW/VON DIAGRAM, CIRCULATING & SERVICE WATER SYSTEM
06. 11448-FM-071D	FLOW/VON DIAGRAM, CIRCULATING & SERVICE WATER SYSTEM
07. 11448-FM-072E	FLOW/VON DIAGRAM, COMPONENT COOLING WATER SYSTEM
08. 11448-FM-072C	FLOW/VON DIAGRAM, COMPONENT COOLING WATER SYSTEM
09. 11448-FM-124A	FLOW/VON DIAGRAM, STEAM GENERATOR BLOWDOWN SYS

BYPRODUCT DRAWINGS

1. 11548-CBM-071B, SH. 1	ISI CLASSIFICATION BOUNDARY DRAWING
2. 11548-HPM-071B, SH. 1	ISI HYDROSTATIC/PNEUMATIC PRESSURE TESTING DRAWING
3. 11548-SPM-071B, SH. 1	ISI SYSTEM PRESSURE TESTING DRAWING

BYPRODUCT NOTES

(A) THE BOUNDARY CHANGE(S) AT THE SUBJECT NORMALLY OPEN, MANUALLY OPERATED VALVE(S) WERE REVIEWED AND APPROVED BY THE NRC DURING NRC/VIRGINIA POWER MEETINGS AT SURRY ON APRIL 15, 16, AND 17, 1980 AND AT BETHESDA ON SEPTEMBER 24 AND 25, 1984. THE NRC HAS NOT WRITTEN A SAFETY EVALUATION REPORT TO DOCUMENT THEIR REVIEW AND APPROVAL.

(B) THE SHELL SIDE OF THE CHARGING PUMP SEAL COOLERS AND ASSOCIATED PIPING HAVE BEEN CLASSIFIED ISI CLASS 3 IN ACCORDANCE WITH REGULATORY GUIDE 1.26, ARTICLE C.2.a.

(C) THE UNIT 1 / UNIT 2 BOUNDARY FOR INSERVICE INSPECTION IS BEING TAKEN AT VALVE 2-SW-443 ON LINE NUMBER 2"-WS-5-9107.

(D) SEE 11448-CBM-071B FOR UNIT 1 / UNIT 2 BOUNDARY.

FOR ISI CLASSIFICATION BOUNDARY DRAWING LEGEND AND SYMBOLS, SEE 11448-CB-L&S.

CONTINUATION DRAWING NUMBERS REFER TO FM OR FB DRAWINGS. THE CORRESPONDING CLASSIFICATION BOUNDARY DRAWINGS (CBM OR CBB) CAN BE DETERMINED BY SUBSTITUTING CBM OR CBB FOR FM OR FB.

CAUTION:
THE BACKGROUND PORTION OF THIS BYPRODUCT DRAWING IS FOR REFERENCE ONLY. THE BACKGROUND INFORMATION IS NOT CONTROLLED AND MAY NOT REFLECT THE ACTUAL PLANT CONFIGURATION. REFER TO THE LATEST FLOW/VALVE OPERATING NUMBERS DIAGRAM FOR CONTROLLED BACKGROUND INFORMATION.

REVISION DESCRIPTION

	REV	DATE	DSGN	DRWN	CHKD	DSGN SUPV	LEAD ENGR	CIVIL ENGR	ELEC ENGR	MECH ENGR	ISI	E.M. ENGR	I&C ENGR
REVISED PER REVISION 26 & 27 OF 11548-FM-071B SH-1 THIS DRAWING SUPERSEDES REV 0 ORIGINAL	1	1-9-91	—	APG	PMG	MP	—	—	—	—	—	—	—
INITIAL ISSUE PER REVISION 25 OF 11548-FM-071B	0												

THIS BYPRODUCT DWG ISSUED PER THE FOLLOWING FLOW/VON DIAGRAM

FLOW/VON DRAWING NO.	REV.
11548-FM -071B	27

SH 1 OF 2

VIRGINIA POWER
NORTH CAROLINA POWER

NUCLEAR ENGINEERING SERVICES
RICHMOND, VIRGINIA

ISI CLASSIFICATION BOUNDARY DRAWING
CIRCULATING AND SERVICE WATER SYSTEM
SURRY POWER STATION UNIT 2
VIRGINIA POWER

DSGN —	DSGN SUPV ARF	CAD NO. S2071B1FMBY1	
DRWN NG	DISPL ENGR BAK	DRAWING NO. 11548-CBM-071B	REV. 1
CHKD JES/MBL	LEAD ENGR		
DATE 1-14-88	SCALE NONE	UNLESS OTHERWISE NOTED	SH 1 OF 2

21-FEB-1991 14:24
ZGA5:[350,121]S2071B1FM.BY1

SI APERTURE CARD

9112100124

D-10