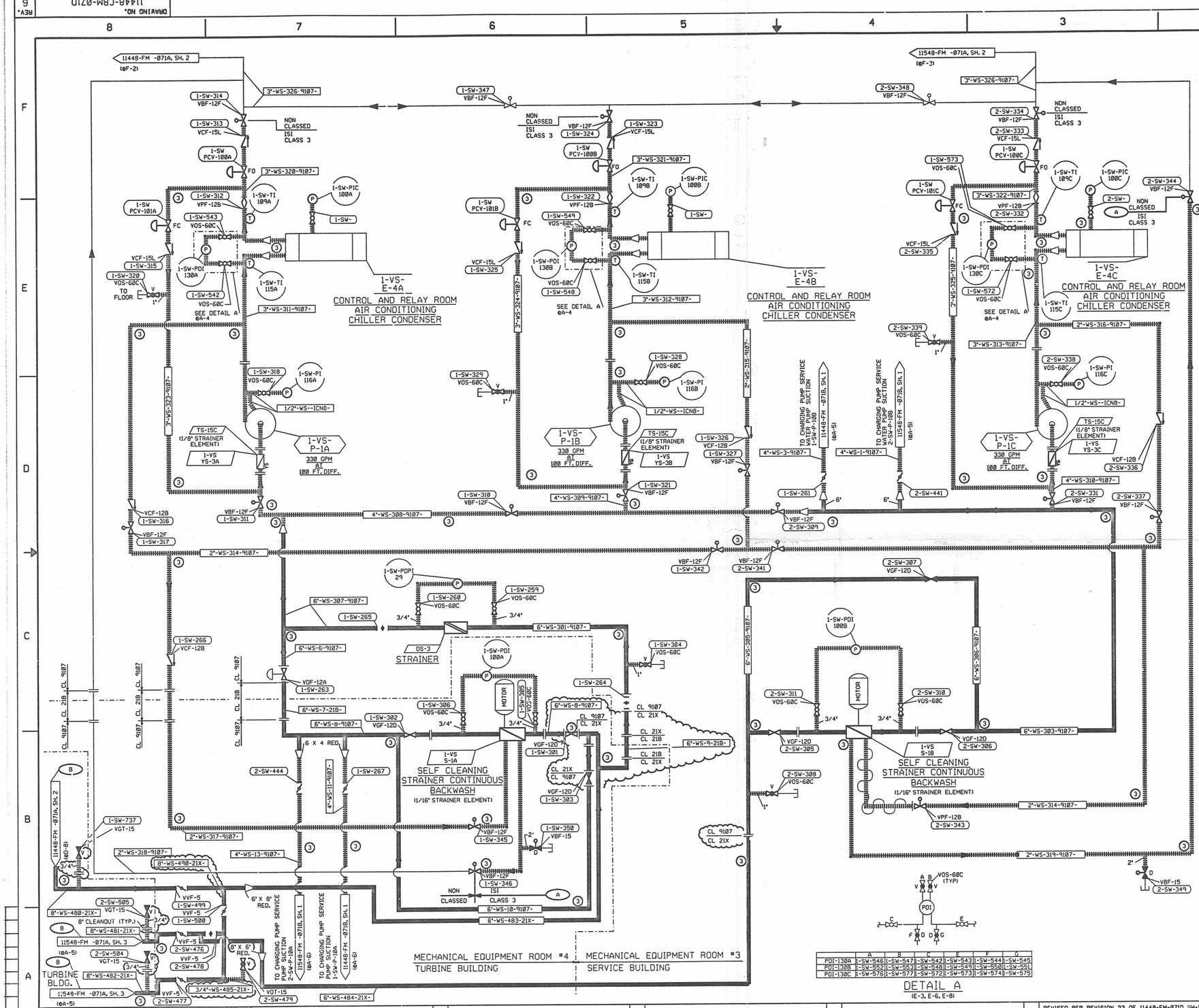

NOTES

1. TYPE 316 SS TUBING IS RECOMMENDED FOR CLASS DESIGNATION ICN8 SPECIFIED ON THIS DRAWING.

REFERENCE DRAWINGS

NUMBER	TITLE
01. 11448-FM-071A	FLOW/VON DIAGRAM,CIRCULATING & SERVICE WATER SYSTEM
02. 11448-FM-071B	FLOW/VON DIAGRAM,CIRCULATING & SERVICE WATER SYSTEM
03. 11448-FB-45A/47A	FLOW & VON DIAGRAMS,FIRE PROTECTION & DOMESTIC WATER
04. 11548-FM-071A	FLOW/VON DIAGRAM,CIRCULATING & SERVICE WATER
05. 11548-FM-071B	FLOW/VON DIAGRAM,CIRCULATING & SERVICE WATER

BYPRODUCT DRAWINGS

1. 11448-CBM-071D, SH.1	ISI CLASSIFICATION BOUNDARY DRAWING
2. 11448-HPM-071D, SH.1	ISI HYDROSTATIC/PNEUMATIC PRESSURE TESTING DRAWING
3. 11448-SPM-071D, SH.1	ISI SYSTEM PRESSURE TESTING DRAWING

BYPRODUCT NOTES

(A) THE BOUNDARY CHANGE(S) AT THE SUBJECT NORMALLY OPEN, MANUALLY OPERATED VALVE(S) WERE REVIEWED AND APPROVED BY THE NRC DURING NRC/VIRGINIA POWER MEETINGS AT SURRY ON APRIL 15,16, AND 17, 1980 AND AT BETHSEDA ON SEPTEMBER 24 AND 25 1984. THE NRC HAS NOT WRITTEN A SAFETY EVALUATION REPORT TO DOCUMENT THEIR REVIEW AND APPROVAL.

(B) PORTIONS OF THIS SYSTEM HAVE BEEN CLASSIFIED IS' CLASS 3 IN ACCORDANCE WITH REGULATORY GUIDE 1.26 ARTICLE C.2.A.

(C) THE 'DESIGN BASIS' AND 'DESCRIPTION' FOR THE SERVICE WATER SYSTEM ARE PROVIDED IN UFSAR SECTIONS 9.2.1 AND 9.2.2. RESPECTIVELY.

FOR ISI CLASSIFICATION BOUNDARY DRAWING LEGEND AND SYMBOLS, SEE 11448-CBM-L&S.

CONTINUATION DRAWING NUMBERS REFER TO FM OR FB DRAWINGS. THE CORRESPONDING CLASSIFICATION BOUNDARY DRAWINGS (CBM OR CBB) CAN BE DETERMINED BY SUBSTITUTING CBM OR CBB FOR FM OR FB.

CAUTION:
THE BACKGROUND PORTION OF THIS BYPRODUCT DRAWING IS FOR REFERENCE ONLY. THE BACKGROUND INFORMATION IS NOT CONTROLLED AND MAY NOT REFLECT THE ACTUAL PLANT CONFIGURATION. REFER TO THE LATEST FLOW/VALVE OPERATING NUMBERS DIAGRAM FOR CONTROLLED BACKGROUND INFORMATION.

REVISION DESCRIPTION

THIS BYPRODUCT DWG ISSUED PER THE FOLLOWING FLOW/VON DIAGRAM

FLOW/VON DRAWING NO.	REV.
11448-FM -071D	22

SH 1 OF 1

VIRGINIA POWER
NORTH CAROLINA POWER

NUCLEAR ENGINEERING SERVICES
RICHMOND, VIRGINIA

ISI CLASSIFICATION BOUNDARY DRAWING
CIRCULATING & SERVICE WATER SYSTEM
SURRY POWER STATION UNIT 1
VIRGINIA POWER

REVISED PER REVISION 22 OF 11448-FM-071D SH-1
THIS DRAWING SUPERSEDES REV 5 ORIGINAL

DSGN		DSGN SUPV JVB	CAD NO. S1071D1FM.BY1
DRWN DAC		DISFL ENGR	DRAWING NO. 11448-CBM-071D — REV. 6
CHKD JES/MBL		LEAD ENGR PWT	
DATE 9/17/87		SCALE NONE	UNLESS OTHERWISE NOTED — SH 1 OF 1

·MAY·1991 08:47
S:[350,111]S1071D1FM.BY1

SI APERTURE CARD

9112090 456

D-07