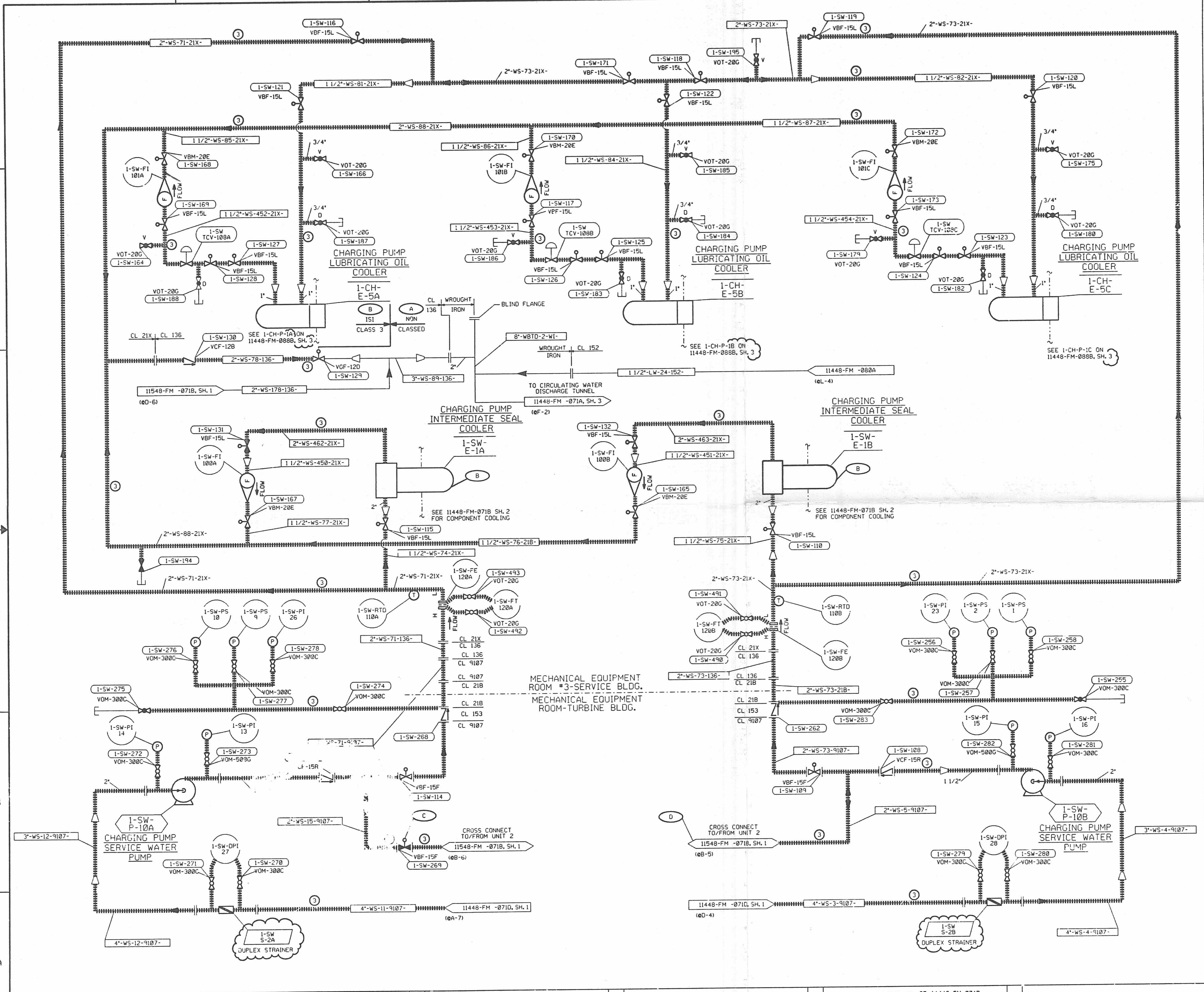

NOTES

NONE

REFERENCE DRAWINGS

NUMBER	TITLE
01. 11448-FM-071A	FLOW/VON DIAGRAM,CIRCULATING & SERVICE WATER SYSTEM
02. 11448-FM-071D	FLOW/VON DIAGRAM,CIRCULATING & SERVICE WATER SYSTEM
03. 11448-FM-072C	FLOW/VON DIAGRAM,COMPONENT COOLING WATER SYSTEM
04. 11448-FM-30A/80A	FLOW & VON DIAGRAMS,WASTE DISPOSAL SYSTEM
05. 11448-FM-088B	FLOW/VON DIAGRAM,CHEM & VOLUME CONTROL SYSTEM
06. 11448-FM-124A	FLOW/VON DIAGRAM,STEAM GENERATOR BLOWDOWN SYS
07. 11548-FM-071B	FLOW/VON DIAGRAM,CIRCULATING & SERVICE WATER SYSTEM

BYPRODUCT DRAWINGS

1. 11448-CBM-071B, SH. 1 — ISI CLASSIFICATION BOUNDARY DRAWING
2. 11448-HPM-071B, SH. 1 — ISI HYDROSTATIC/PNEUMATIC PRESSURE TESTING DRAWING
3. 11448-SPM-071B, SH. 1 — ISI SYSTEM PRESSURE TESTING DRAWING

BYPRODUCT NOTES

(A) THE BOUNDARY CHANGE(S) AT THE SUBJECT NORMALLY OPEN, MANUALLY OPERATED VALVE(S) WERE REVIEWED AND APPROVED BY THE NRC DURING NRC/VIRGINIA POWER MEETINGS AT SURRY ON APRIL 15, 16, AND 17, 1980 AND AT BETHESDA ON SEPTEMBER 24 AND 25, 1984. THE NRC HAS NOT WRITTEN A SAFETY EVALUATION REPORT TO DOCUMENT THEIR REVIEW AND APPROVAL.

(B) THE SHELL SIDE OF THE CHARGING PUMP SEAL COOLERS AND ASSOCIATED PIPING HAVE BEEN CLASSIFIED ISI CLASS 3 IN ACCORDANCE WITH REGULATORY GUIDE 1.26, ARTICLE C.2.a.

(C) THE UNIT 1 / UNIT 2 BOUNDARY FOR INSERVICE INSPECTION IS BEING TAKEN AT VALVE 1-SW-269 ON LINE NUMBER 2"-WS-15-9107.

(D) SEE 11548-CBM-071B FOR UNIT 1 / UNIT 2 BOUNDARY.

FOR ISI CLASSIFICATION BOUNDARY DRAWING LEGEND AND SYMBOLS, SEE 11448-CBM-L&S.

CONTINUATION DRAWING NUMBERS REFER TO FM OR FB DRAWINGS. THE CORRESPONDING CLASSIFICATION BOUNDARY DRAWINGS (CBM OR CBB) CAN BE DETERMINED BY SUBSTITUTING CBM OR CBB FOR FM OR FB.

CAUTION:
THE BACKGROUND PORTION OF THIS BYPRODUCT DRAWING IS FOR REFERENCE ONLY. THE BACKGROUND INFORMATION IS NOT CONTROLLED AND MAY NOT REFLECT THE ACTUAL PLANT CONFIGURATION. REFER TO THE LATEST FLOW/VALVE OPERATING NUMBERS DIAGRAM FOR CONTROLLED BACKGROUND INFORMATION.

REVISION DESCRIPTION

THIS BYPRODUCT DWG ISSUED PER THE FOLLOWING FLOW/VON DIAGRAM

FLOW/VON DRAWING NO.	REV.
11448-FM -071B	26
SH 1 OF 2	

REV	DESCRIPTION	DATE	DSGN	DRWN	CHKD	DSGN SUPV	LEAD ENGR	CIVIL ENGR	ELEC ENGR	MECH ENGR	ISI	E.M. ENGR	I&C ENGR
4	REVISED PER REVISION 25 & 26 OF 11448-FM-071B SH-1 THIS DRAWING SUPERSEDES REV 3 ORIGINAL	1 21	—	APS	FMS	[illegible]	—	—	—	[illegible]	[illegible]	—	—
3	REVISED PER REVISION 24 OF 11448-FM-071B SH1 THIS DRAWING SUPERSEDES REV 2 ORIGINAL	02-26-90	—	APS	FMS	ARF	—	—	—	BWF	DLJ	—	—
2	REVISED PER REVISION 23 OF 11448-FM-071B THIS DRAWING SUPERSEDES REV 1 ORIGINAL	08-15-89	—	DJH	SKH	ARF	—	—	—	—	DLJ	—	—
1	REVISED PER REVISION 22 OF 11448-FM-071B THIS DRAWING SUPERSEDES REV 0 ORIGINAL	02-04-89	—	GTW	—	—	—	—	—	—	DRV	—	—
0	INITIAL ISSUE PER REVISION 21 OF 11448-FM-071B	03-28-88	X	X	X	X	—	—	—	—	DRV	—	—

VIRGINIA POWER
NORTH CAROLINA POWER

NUCLEAR ENGINEERING SERVICES
RICHMOND, VIRGINIA

ISI CLASSIFICATION BOUNDARY DRAWING
CIRCULATING AND SERVICE WATER SYSTEM
SURRY POWER STATION UNIT 1
VIRGINIA POWER

DSGN ———	DSGN SUPV JWB	CAD NO. S1071B1FM.BY1
DRWN DMG	DISPL ENGR ———	DRAWING NO. 11448-CBM-071B REV. 4
CHKD RCB/MBL	LEAD ENGR PWT	
DATE 6-23-86	SCALE NONE	UNLESS OTHERWISE NOTED SH 1 OF 2

-JAN-1991 07:14
A5:[350,111]S1071B1FM.BY1

SI APERTURE CARD

9112090454

D-05